CLASSIFICATION OF CHARACTERISTICS (DOD-STD-2100)
CRITICAL – NONE
MAJOR – 3
MINOR – ALL OTHER CHARACTERISTICS

REVISIONS			
LTR	DESCRIPTION	DATE	APPROVED

NOTES:

1. INTERPRET DRAWING IN ACCORDANCE WITH DOD-STD-100.
(M103) 2. MATERIAL: COPPER ALLOY NUMBER 260 IN ACCORDANCE WITH MIL-C-50, TEMPER, 1/4 HARD, .038 STK REF.
3. FINISHED ANVIL SHALL BE FREE OF CRACKS, LAMINATIONS, NICKS, DENTS, SCRATCHES OR OTHER METAL DEFECTS.

CONTROLLED-PROJECT: FOR WORK ORDER NUMBER PV10-M-2162 ONLY DO NOT USE TDP FOR ANY OTHER PROCESS

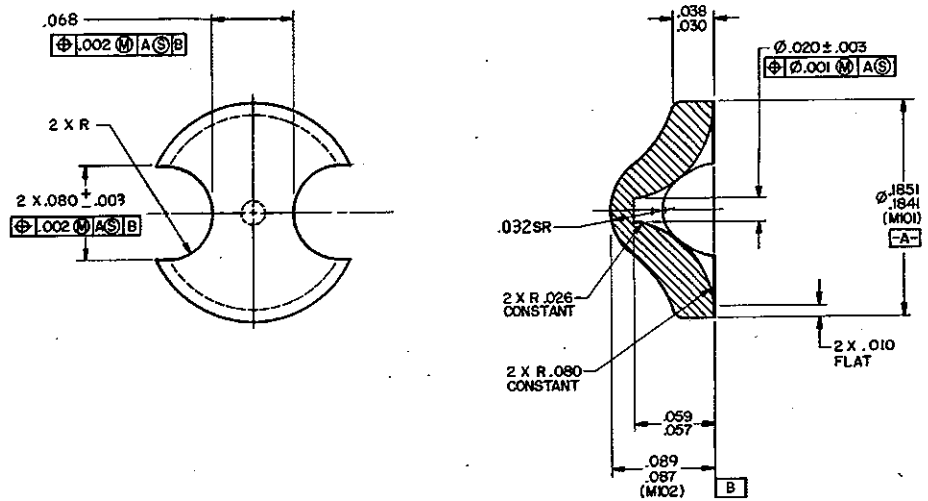

FIND NO.	QTY REQD	CODE IDENT	PART NO. OR IDENTIFYING NO.	SPECIFICATION NO.	NOMENCLATURE OR DESCRIPTION	MATERIAL OR NOTE

PARTS LIST

1496AS100	1496AS100
NEXT ASSY	USED ON
APPLICATION	

UNLESS OTHERWISE SPECIFIED DIMENSIONS ARE IN INCHES.
TOLERANCES: ANGLES ± —
FRACTIONS ± —
2 PLACE DECIMALS ± —
3 PLACE DECIMALS ± .005
MATERIAL: 2

NAVAL ORDNANCE STATION INDIAN HEAD, MD. 20640

APPROVALS	DATE
PREP: DTI (KVN)	22 APR 86
CHK: J.W. (HARRION)	17 APR 86
ENGR: G. H. Chen	17 Apr 86

APPROVED FOR NAVAIR 10/20/89

DEPARTMENT OF THE NAVY
NAVAL AIR SYSTEMS COMMAND
WASHINGTON, D.C. 20361

ANVIL

SIZE	CODE IDENT NO.	NAVAIR DWG NO.
D	30003	1496AS101

SCALE: 20/1 SHEET 1 OF 1

DISTRIBUTION STATEMENT C: Distribution authorized to U.S. Government and their contractors, administrative or operational use, 4-10-91. Other requests for this document shall be referred to Commanding Officer, Naval Ordnance Station, Indian Head, MD 20640-5000.

NOTES:

1. INTERPRET DRAWING IN ACCORDANCE WITH DOD-STD-100.
2. THE PRIMER CUP SHALL BE FREE OF CRACKS, LAMINATIONS, NICKS, DENTS, SCRATCHES AND OTHER METAL DEFECTS.

(M104) 3. MATERIAL: COPPER ALLOY NO. C26000 (CARTRIDGE BRASS, 70%); STRIP THICKNESS .013 REF, NOMINAL GRAIN SIZE .025 MM IN ACCORDANCE WITH ASTM B36.

CRITICAL	NONE
MAJOR	4
MINOR	ALL OTHER CHARACTERISTICS

CONTROLLED-PROJECT: FOR WORK ORDER NUMBER PV10-M-2162 ONLY DO NOT USE TDP FOR ANY OTHER PROCESS

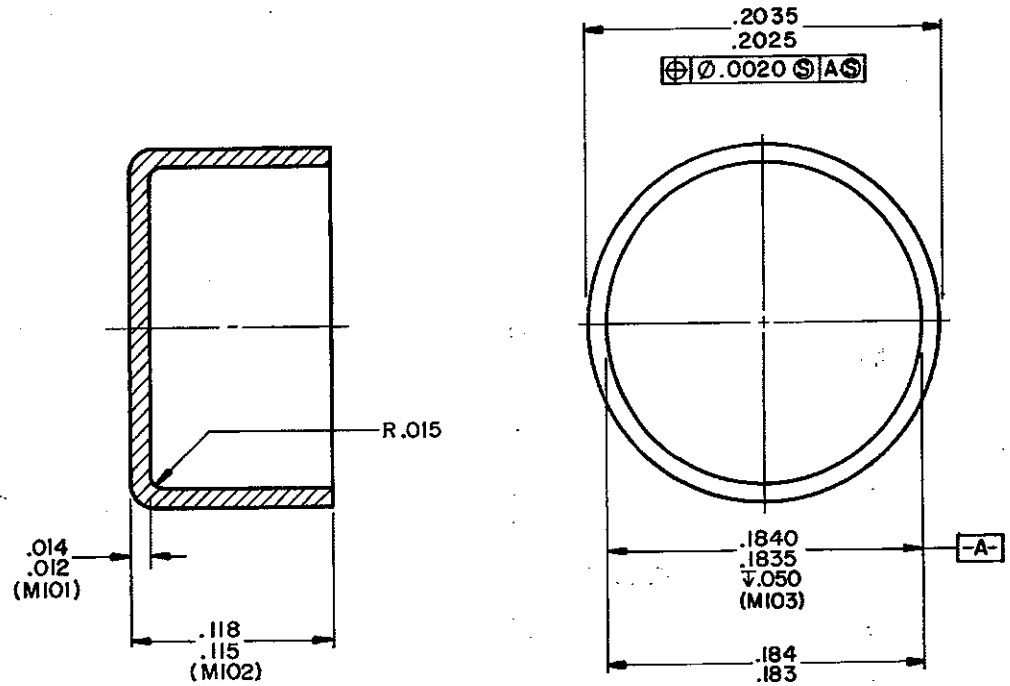

FIND NO.	QTY REQD	CODE IDENT	PART NO. OR IDENTIFYING NO.	SPECIFICATION NO.	NOMENCLATURE OR DESCRIPTION	MATERIAL OR NOTE

PARTS LIST

1496AS100	1496AS100
NEXT ASSY	USED ON
APPLICATION	

UNLESS OTHERWISE SPECIFIED DIMENSIONS ARE IN INCHES.

TOLERANCES: ANGLES ± —
FRACTIONS ± —
2 PLACE DECIMALS ± —
3 PLACE DECIMALS ± .005

MATERIAL: 3

NAVAL ORDNANCE STATION
INDIAN HEAD, MD 20640-5000

APPROVALS	DATE
PREP: DTI (HVN)	14APR86
CHK: J.W. HARMON	17APR86
ENGR: G. H. Chen	28 Apr 86

APPROVED FOR NAVAIR
Thomas Benedict 10/30/89

DEPARTMENT OF THE NAVY
NAVAL AIR SYSTEMS COMMAND
WASHINGTON, D.C. 20361

CUP

SIZE	CODE IDENT NO.	NAVAIR DWG NO.
C	30003	1496AS102

SCALE: 20/1 SHEET 1 OF 1

1496AS102

DISTRIBUTION STATEMENT C: Distribution authorized to U.S. Government and their contractors, administrative or operational use, 4-10-91. Other requests for this document shall be referred to Commanding Officer, Naval Ordnance Station, Indian Head, MD 20640-5000.

NOW-NAVORDSTA—110/0/24 (Rev 3-84)

CLASSIFICATION OF CHARACTERISTICS (DOD-STD-2101)
CRITICAL — NONE
MAJOR — 4
MINOR — ALL OTHER CHARACTERISTICS

REVISIONS			
LTR	DESCRIPTION	DATE	APPROVED
A	REPLACES REVISION NONE WITH	11/20/87	T. B.
	CHANGE SEE NOR 851AS114-A	12/4/89	[illegible]
B	SEE NOR 851AS114-B		

CONTROLLED-PROJECT: FOR WORK ORDER NUMBER PV10-M-2162 ONLY DO NOT USE TDP FOR ANY OTHER PROCESS

NOTES:

1. INTERPRET DRAWING IN ACCORDANCE WITH DOD-STD-100.
2. THE PRIMER CUP SHALL BE FREE OF CRACKS, LAMINATIONS, NICKS, DENTS, SCRATCHES AND OTHER METAL DEFECTS.

(M104) 3. MATERIAL: COPPER ALLOY NO. C26000 (CARTRIDGE BRASS, 70%); STRIP THICKNESS .018 REF, NOMINAL GRAIN SIZE .025 MM IN ACCORDANCE WITH ASTM B36.

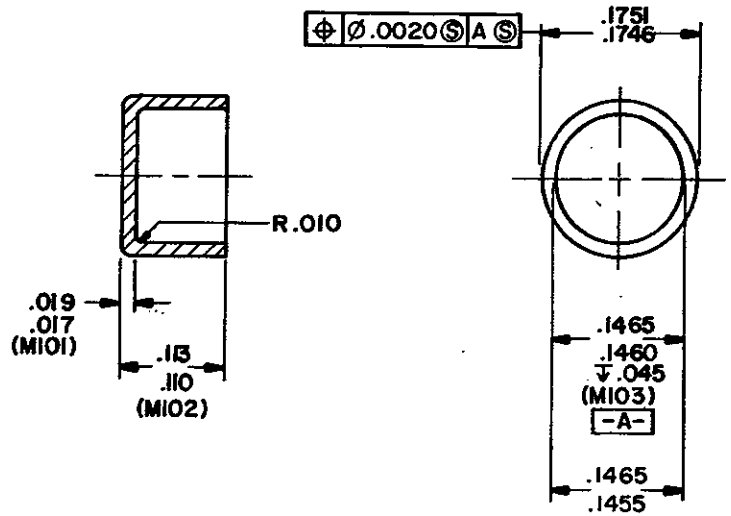

851AS114

FIND NO.	QTY REQD	CODE IDENT	PART NO. OR IDENTIFYING NO.	SPECIFICATION NO.	NOMENCLATURE OR DESCRIPTION	MATERIAL OR NOTE

PARTS LIST

851AS400	851AS400
851AS250	851AS250
851AS110	851AS110
NEXT ASSY	USED ON
APPLICATION	

UNLESS OTHERWISE SPECIFIED DIMENSIONS ARE IN INCHES.

TOLERANCES: ANGLES ± —
FRACTIONS ± —
2 PLACE DECIMALS ± —
3 PLACE DECIMALS ± .005

MATERIAL: 3

NAVAL ORDNANCE STATION
INDIAN HEAD, MD 20640-5000

APPROVALS	DATE
PREP: E. FUNKHOUSER	11 FEB 86
CHK: J. W. HARMON	20 FEB 86
ENGR: G. H. Chen	20 FEB 86

APPROVED FOR NAVAIR [signature] 11/20/87

DEPARTMENT OF THE NAVY
NAVAL AIR SYSTEMS COMMAND
WASHINGTON, D.C. 20361

CUP

SIZE	CODE IDENT NO.	NAVAIR DWG NO.
C	30003	851AS114

SCALE: 10/1 SHEET 1 OF 1

DISTRIBUTION STATEMENT C: Distribution authorized to U.S. Government and their contractors, administrative or operational use, 4-10-91. Other requests for this document shall be referred to Commanding Officer, Naval Ordnance Station, Indian Head, MD 20640-5000.

CLASSIFICATION OF CHARACTERISTICS (DOD-STD-2168)
CRITICAL— NONE
MAJOR— 3
MINOR— ALL OTHER CHARACTERISTICS

REVISIONS			
LTR	DESCRIPTION	DATE	APPROVED
A	REPLACES REVISION NONE WITH CHANGE	[illegible]	[illegible]
B	SEE NOR 85IAS251-B	[illegible]	[illegible]

NOTES:

1. INTERPRET DRAWING IN ACCORDANCE WITH DOD-STD-100.
2. (M103) MATERIAL: COPPER ALLOY NUMBER 260 IN ACCORDANCE WITH MIL-C-50, TEMPER, 1/4 HARD, .038 STK REF.
3. FINISHED ANVIL SHALL BE FREE OF CRACKS, LAMINATIONS, NICKS, DENTS, SCRATCHES OR OTHER METAL DEFECTS.

CONTROLLED-PROJECT: FOR WORK ORDER NUMBER PV10-M-2162 ONLY DO NOT USE TDP FOR ANY OTHER PROCESS

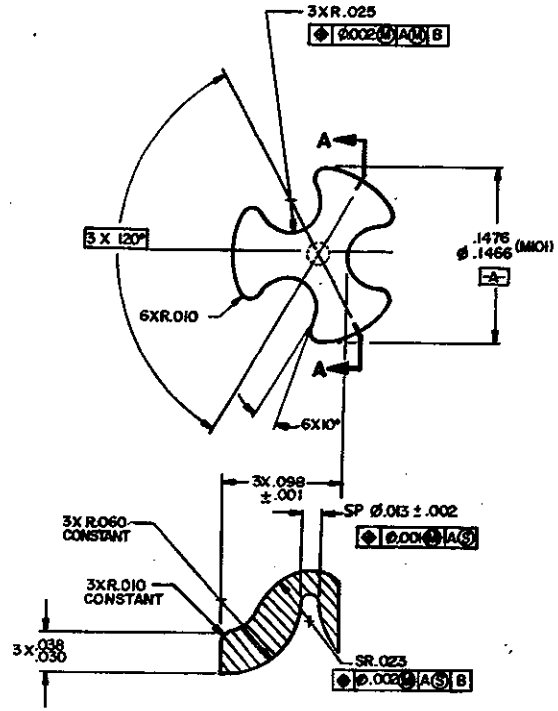

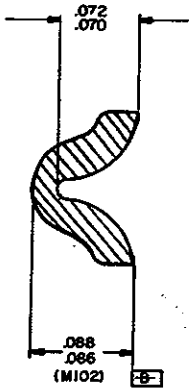

SECTION A-A

FIND NO.	QTY REQD.	CODE IDENT	PART NO. OR IDENTIFYING NO.	SPECIFICATION NO.	NOMENCLATURE OR DESCRIPTION	MATERIAL OR NOTE

PARTS LIST

NEXT ASSY	USED ON
APPLICATION	

UNLESS OTHERWISE SPECIFIED DIMENSIONS ARE IN INCHES.

TOLERANCES: ANGLES ± 1°
FRACTIONS ± —
2 PLACE DECIMALS ± —
3 PLACE DECIMALS ± .005

MATERIAL: 2

NAVAL ORDNANCE STATION INDIAN HEAD, MD. 20640

APPROVALS	DATE
PREP: DTI (MOL)	25-FEB-86
CHK: J.W. Harney	[illegible]
ENGR: G.H. Chen	[illegible]

APPROVED FOR NAVAIR [illegible]

DEPARTMENT OF THE NAVY
NAVAL AIR SYSTEMS COMMAND
WASHINGTON, D.C. 20361

ANVIL

SIZE	CODE IDENT NO.	NAVAIR DWG NO.
D	30003	85IAS251

SCALE: 20 / 1 SHEET 1 OF 1

DISTRIBUTION STATEMENT C: Distribution authorized to U.S. Government and their contractors, administrative or operational use, 4-10-91. Other requests for this document shall be referred to Commanding Officer, Naval Ordnance Station, Indian Head, MD 20640-5000.

CLASSIFICATION OF CHARACTERISTICS (DOD-STD-2101)
CRITICAL – NONE
MAJOR – 3
MINOR – ALL OTHER CHARACTERISTICS

REVISIONS			
LTR	DESCRIPTION	DATE	APPROVED

CONTROLLED-PROJECT: FOR WORK ORDER NUMBER PV10-M-2162 ONLY DO NOT USE TDP FOR ANY OTHER PROCESS

NOTES:

1. INTERPRET DRAWING IN ACCORDANCE WITH DOD-STD-100.
2. (M103) MATERIAL : COPPER ALLOY NUMBER 260 IN ACCORDANCE WITH MIL-C-50, TEMPER, 1/4 HARD, .038 STK REF.
3. FINISHED ANVIL SHALL BE FREE OF CRACKS, LAMINATIONS, NICKS, DENTS, SCRATCHES OR OTHER METAL DEFECTS.

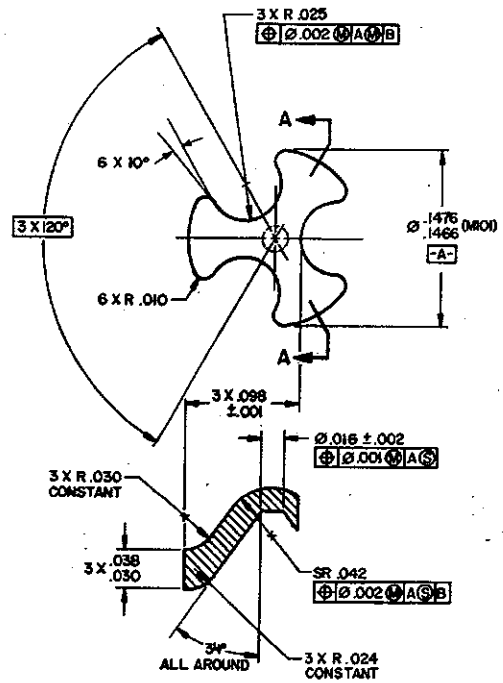

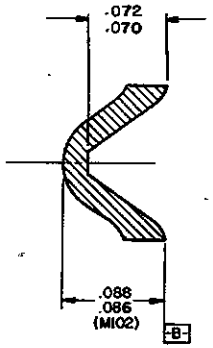

SECTION A-A

FEATURES NOT SHOWN OMITTED FOR CLARITY.

FIND NO.	QTY REQD	CODE IDENT	PART NO. OR IDENTIFYING NO.	SPECIFICATION NO.	NOMENCLATURE OR DESCRIPTION	MATERIAL OR NOTE

PARTS LIST

85IAS250	85IAS250
NEXT ASSY	USED ON
APPLICATION	

UNLESS OTHERWISE SPECIFIED DIMENSIONS ARE IN INCHES.
TOLERANCES: ANGLES ± 1°
FRACTIONS ± —
2 PLACE DECIMALS ± —
3 PLACE DECIMALS ± .005
MATERIAL: 2

NAVAL ORDNANCE STATION INDIAN HEAD, MD. 20640

APPROVALS	DATE
PREP: DTI (HVN)	26APR86
CHK: J.W. HARMON	17 APR 86
ENGR: G. H. [illegible]	18 Apr 86

APPROVED FOR NAVAIR [illegible] 5/10/90

DEPARTMENT OF THE NAVY
NAVAL AIR SYSTEMS COMMAND
WASHINGTON, D.C. 20361

ANVIL

SIZE	CODE IDENT NO.	NAVAIR DWG NO.
D	30003	85IAS862

SCALE: 2/1 SHEET 1 OF 1

DISTRIBUTION STATEMENT C: Distribution authorized to U.S. Government and their contractors, administrative or operational use, 4-10-91. Other requests for this document shall be referred to Commanding Officer, Naval Ordnance Station, Indian Head, MD 20640-5000.

85IAS862

CLASSIFICATION OF CHARACTERISTICS (DOD-STD-2101)
CRITICAL— NONE
MAJOR— 3
MINOR— ALL OTHER CHARACTERISTICS

REVISIONS			
LTR	DESCRIPTION	DATE	APPROVED
A	SEE NOR 851AS501-A	11/13/79	[illegible]

NOTES:

1. INTERPRET DRAWING IN ACCORDANCE WITH DOD-STD-100.
2. (M103) MATERIAL : COPPER ALLOY NUMBER 260 IN ACCORDANCE WITH MIL-C-50, TEMPER, 1/4 HARD, .038 STK REF.
3. FINISHED ANVIL SHALL BE FREE OF CRACKS, LAMINATIONS, NICKS, DENTS, SCRATCHES OR OTHER METAL DEFECTS.

CONTROLLED-PROJECT: FOR WORK ORDER NUMBER PV10-M-2162 ONLY DO NOT USE TDP FOR ANY OTHER PROCESS

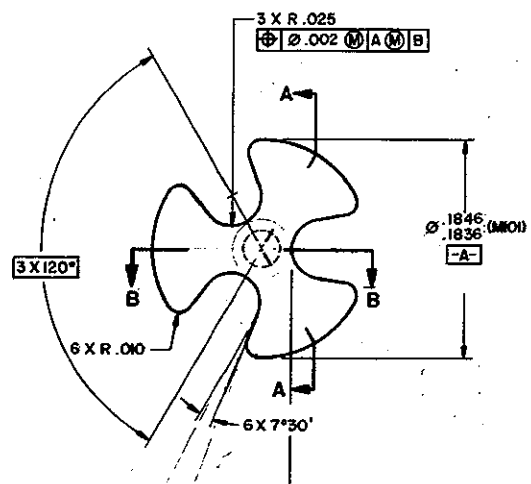

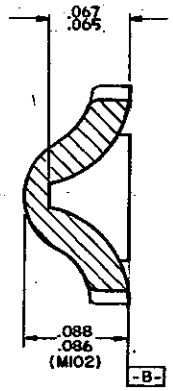

SECTION A-A

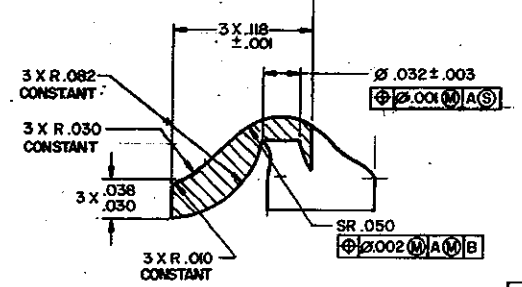

SECTION B-B

FIND NO.	QTY REQD.	CODE IDENT	PART NO. OR IDENTIFYING NO.	SPECIFICATION NO.	NOMENCLATURE OR DESCRIPTION	MATERIAL OR NOTE

PARTS LIST

NEXT ASSY	USED ON
851AS500	851AS500

APPLICATION

UNLESS OTHERWISE SPECIFIED DIMENSIONS ARE IN INCHES.

TOLERANCES: ANGLES ± 1°
FRACTIONS ± —
2 PLACE DECIMALS ± —
3 PLACE DECIMALS ± .005

MATERIAL: 2

NAVAL ORDNANCE STATION INDIAN HEAD, MD. 20640

APPROVALS	DATE
PREP: DTI (KGS)	25FEB86
CHK: J.W. HARMON	5 MAR 86
ENGR: G. H. Chu	17 Mar 86

APPROVED FOR NAMAIR [signature] 4/8/88

DEPARTMENT OF THE NAVY
NAVAL AIR SYSTEMS COMMAND
WASHINGTON, D.C. 20361

ANVIL

SIZE	CODE IDENT NO.	NAMAIR DWG NO.
D	30003	851AS501

SCALE: 20/1 SHEET 1 OF 1

[illegible] C. Distribution [illegible] U.S. Government and their contractors, [illegible] 4-18-84. Other requests for this document shall be referred to Commanding Officer, Naval Ordnance Station, Indian Head, MD 20640-5000.

NDW-NAVORDSTA—11010 24

CLASSIFICATION OF CHARACTERISTICS (DOD-STD-2101)
CRITICAL — NONE
MAJOR — 4
MINOR — ALL OTHER CHARACTERISTICS

REVISIONS			
LTR	DESCRIPTION	DATE	APPROVED

NOTES:

1. INTERPRET DRAWING IN ACCORDANCE WITH DOD-STD-100.
2. THE PRIMER CUP SHALL BE FREE OF CRACKS, LAMINATIONS, NICKS, DENTS, SCRATCHES AND OTHER METAL DEFECTS.

(M104) 3. MATERIAL: COPPER ALLOY NO. C26000 (CARTRIDGE BRASS, 70%); STRIP THICKNESS .025 REF, NOMINAL GRAIN SIZE .025 MM IN ACCORDANCE WITH ASTM B36.

CONTROLLED-PROJECT: FOR WORK ORDER NUMBER PV10-M-2162 ONLY DO NOT USE TDP FOR ANY OTHER PROCESS

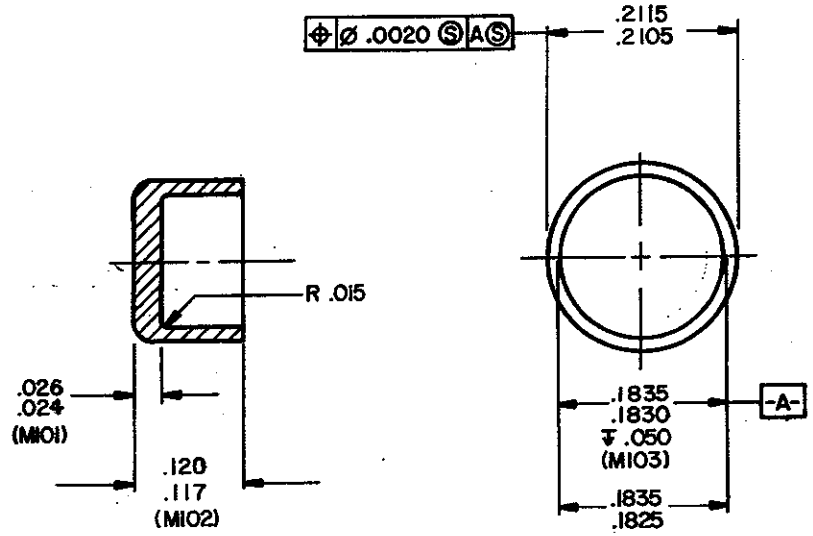

851AS502

FIND NO.	QTY REQD	CODE IDENT	PART NO. OR IDENTIFYING NO.	SPECIFICATION NO.	NOMENCLATURE OR DESCRIPTION	MATERIAL OR NOTE

PARTS LIST

NEXT ASSY	USED ON
851AS500	851AS500

APPLICATION

UNLESS OTHERWISE SPECIFIED DIMENSIONS ARE IN INCHES.

TOLERANCES: ANGLES ± —
FRACTIONS ± —
2 PLACE DECIMALS ± —
3 PLACE DECIMALS ± .005

MATERIAL: 3

NAVAL ORDNANCE STATION
INDIAN HEAD, MD 20640-5000

APPROVALS	DATE
PREP: DTI (MOL)	18 FEB 86
CHK: J.W. HARMON	5 MAR 86
ENGR: G. H. Chen	17 Mar 86

APPROVED FOR NAVAIR
Thomas Benedict 4/8/88

DEPARTMENT OF THE NAVY
NAVAL AIR SYSTEMS COMMAND
WASHINGTON, D.C. 20361

CUP

SIZE	CODE IDENT NO.	NAVAIR DWG NO.
C	30003	851AS502

SCALE: 10/1 SHEET 1 OF 1

DISTRIBUTION STATEMENT C: Distribution authorized to U.S. Government and their contractors, administrative or operational use, 4-10-91. Other requests for this document shall be referred to Commanding Officer, Naval Ordnance Station, Indian Head, MD 20640-5000.

NOTES:

1. INTERPRET DRAWING IN ACCORDANCE WITH DOD-STD-100.
2. (M103) MATERIAL: COPPER ALLOY NUMBER 260 IN ACCORDANCE WITH MIL-C-50, TEMPER, 1/4 HARD, .038 STK REF.
3. FINISHED ANVIL SHALL BE FREE OF CRACKS, LAMINATIONS, NICKS, DENTS, SCRATCHES OR OTHER METAL DEFECTS.

CLASSIFICATION OF CHARACTERISTICS (DOD-STD-100)
CRITICAL– NONE
MAJOR– 3
MINOR– ALL OTHER CHARACTERISTICS

REVISIONS			
LTR	DESCRIPTION	DATE	APPROVED
A	REPLACES REVISION NONE WITH CHANGE SEE NCR 851AS113-A	[illegible]	[illegible]

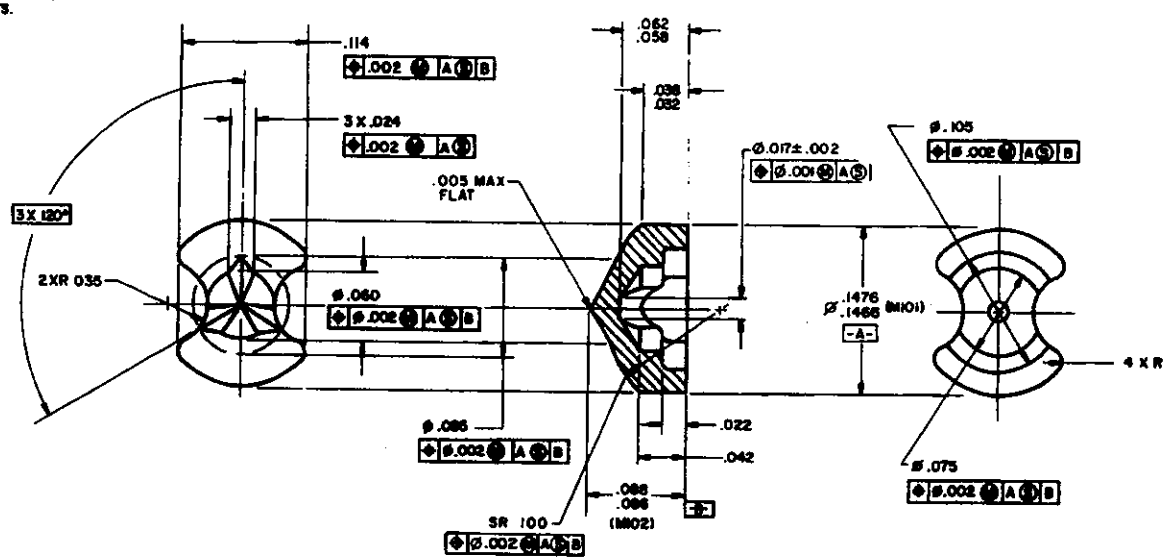

FOR INFORMATION ONLY

NOT TO BE USED FOR MANUFACTURE OR PROCESS

-WILL NOT BE UPDATED-

FIND NO.	QTY REQD.	CODE IDENT	PART NO. OR IDENTIFYING NO.	SPECIFICATION NO.	NOMENCLATURE OR DESCRIPTION	MATERIAL OR NOTE

PARTS LIST

UNLESS OTHERWISE SPECIFIED DIMENSIONS ARE IN INCHES.
TOLERANCES: ANGLES ± —
FRACTIONS ± —
2 PLACE DECIMALS ± —
3 PLACE DECIMALS ± .005
MATERIAL: 2

NAVAL ORDNANCE STATION INDIAN HEAD, MD. 20640

APPROVALS	DATE
PREP: DTI (SL)	[illegible]
CHK: J.W. [illegible]	[illegible]
ENGR: G.H. Chan	[illegible]

APPROVED FOR NAVAIR [signature] 11/24/87

DEPARTMENT OF THE NAVY
NAVAL AIR SYSTEMS COMMAND
WASHINGTON, D.C. 20361

ANVIL

SIZE	CODE IDENT NO.	NAVAIR DWG. NO.
D	30003	851AS113

SCALE: 20/1 SHEET 1 OF 1

NEXT ASSY	USED ON
851AS113	851AS113

APPLICATION