DWG NO. 13350001

REVISIONS				
ZONE	REV	DESCRIPTION	DATE	APPROVED
	D	SEE ECP 1H09020	7/29/09	BM

NOTES:

1. INTERPRET DRAWING IN ACCORDANCE WITH DOD-STD-100.
2. UNLESS OTHERWISE SPECIFIED, MACHINED SURFACES TEXTURE SHALL BE 125 AND FILLET RADII OF .010 MAX.
3. REMOVED BURRS AND BREAK SHARP EDGES .015 R MAX.
4. CHAMFER FIRST THREAD 45° TO MAJOR DIAMETER.
5. PROTECTIVE FINISH: ANODIZE IN ACCORDANCE WITH MIL-A-8625, TYPE III, CL 2, COLOR, BLACK, SEALED.
6. DIMENSIONAL LIMITS APPLY AFTER THE PROTECTIVE FINISH HAS BEEN APPLIED.
7. ALTERNATE MATERIAL: ALUMINUM ALLOY, 6061-T6 IN ACCORDANCE WITH QQ-A-225/8. HARDNESS, BRINELL NO. 80 MIN. (HB 500)
8. INK STAMP DRAWING NO. WITH CURRENT REVISION LETTER IN .25 INCH HIGH CHARACTERS, APPROXIMATELY WHERE SHOWN, USING INK PER A-A-208, TYPE I, COLOR, WHITE, COLOR NO. 37875.
9. QUALITY ASSURANCE PROVISIONS:

   A. INSPECTION AND ACCEPTANCE OF CLASSIFIED CHARACTERISTICS SHALL BE IN ACCORDANCE WITH THE FOLLOWING TABLE:

CLASSIFICATION AND NUMBER	CHARACTERISTIC	INSP LEVEL MIL-STD-105 LEVEL I AQL	METHOD OF INSP.	REMARKS	ZONE	SHEET
C1	THREAD (MS33649-06)	.40	GO-NO GO GAGE	1/	D-3	2
MAJOR 101	2.500-16 UN-2A	.40	GO-NO GO GAGE		C-4	2
MAJOR 102	PROTECTIVE FINISH	1.0	VISUAL	NOTE 9B	NOTE 5	1
MAJOR 103	2.750-16 UN-2A ⌖ Ø.008Ⓜ AⓈ	.40	GO-NO GO GAGE SME		B-2	2
MAJOR 104	2.375-20 UN-2B ⌖ Ø.010 B	.40	GO-NO GO GAGE SME		C-2	2
MAJOR 105	Ø1.990 +.010 -.000 ↗ .008 A	1.0	SME		C-5	2
MAJOR 106	63 ↗ .008 B	1.0	VISUAL SME	2/	D-2	2
MAJOR 107	MATERIAL			NOTE 9B	A-3 NOTE 7	1
MINOR 201	Ø2.665±.005 ↗ .005 B	2.5	SME		C-2	2
MINOR 202	.115	2.5	SME		C-2	2
MINOR 203	Ø2.125 ↗ .010 B	2.5	SME		C-1	2
MINOR 204	.808 +.000 -.010	2.5	SME		D-2	2
MINOR 205	1.53	2.5	SME		C-3	2
MINOR 206	.67	2.5	SME		C-3	2
MINOR 207	30°	2.5	SME		B-2	2
MINOR 208	7.250	2.5	SME		D-3	2
MINOR 209	.270	2.5	SME		C-4	2
MINOR 210	6.130	2.5	SME		B-3	2
MINOR 211	Ø2.50	2.5	SME		C-5	2
MINOR 212	Ø1.80	2.5	SME		C-4	2
MINOR 213	1.249	2.5	SME		B-2	2
MINOR 214	.336 +.005 -.000	2.5	SME		B-2	2
MINOR 215	1.25 SPOTFACE X 1.00	2.5	SME		D-3	2
MINOR 216	Ø3.88	2.5	SME		C-7	2
MINOR 217	2.18	2.5	SME		D-7	2
MINOR 218	4.25 (2 PL)	2.5	SME		B-7	2
MINOR 219	.062 X 45°	2.5	SME		C-2 C-5	2
MINOR 220	CHAMFER	2.5	VISUAL		NOTE 4	1
MINOR 221	R.312	2.5	SME		C-2	2
MINOR 222	DEBURR-BREAK EDGES	2.5	VISUAL		NOTE 3	1
MINOR 223	.80 +.12 -.00	2.5	SME		C-4	2
MINOR 224	2 X 1.00	2.5	SME		B-6	2
MINOR 225	125	2.5	VISUAL		NOTE 2	1
MINOR 226	MATERIAL HARDNESS	4.0	SME	NOTE 9B	MAT'L BLOCK	1
MINOR 227	↗ .010 A	2.5	SME	2/	B-4	2
MINOR 228	32 (MS33649-06)	2.5	VISUAL	3/	D-3	2
MINOR 229	MARKING	2.5	VISUAL		NOTE 8	1

1/ CRITICAL CLASSIFICATION APPLIES TO THE .5625-18 UNJF-38 THREAD ONLY.

2/ RUNOUT LIMITS SHALL BE MEASURED RELATIVE TO THE MAJOR DIAMETER OF THE DATUM THREADS.

3/ CHECK SURFACE TEXTURE FOR O-RING SEAT.

   B. CERTIFICATION FOR CONFORMANCE TO NOTE 5 AND MATERIAL. TEST DATA NECESSARY TO PROVIDE OBJECTIVE EVIDENCE OF COMPLIANCE SHALL ACCOMPANY THE CERTIFICATION.

   C. FIRST ARTICLE INSPECTION SHALL CONSIST OF ALL THE REQUIREMENTS CONTAINED ON THIS DRAWING AND SHALL BE INSPECTED 100 PERCENT ON THE FIRST ITEM WITH OBJECTIVE EVIDENCE OF INSPECTION ACCEPTANCE.

DISTRIBUTION STATEMENT A. APPROVED FOR PUBLIC RELEASE; DISTRIBUTION IS UNLIMITED.

13350000	13350000
NEXT ASSY	USED ON
APPLICATION	

UNLESS OTHERWISE SPECIFIED DIMENSIONS ARE IN INCHES
TOLERANCES:
FRACTIONS ± —
ANGLES ±
3 PLACE DECIMALS ± .010
2 PLACE DECIMALS ± .03

MATERIAL:
AL ALLOY
2024-T3 OR T4
HARDNESS,
BRINELL NO. 120 MIN
PER QQ-A-225/6
7.

NAVAL ORDNANCE STATION
INDIAN HEAD, MD 20640

DATE
PREPARED
CHECKED
ENGINEER
SUBMITTED
APPROVED BY ORDER OF COMMANDER USAMICOM

AUTHENTICATED 14/88

CURRENT DESIGN ACTIVITY CAGE CODE 14083
DEPARTMENT OF THE NAVY
NAVAL SURFACE WARFARE CENTER
INDIAN HEAD DIVISION
INDIAN HEAD, MARYLAND 20640-5035

U.S. ARMY MISSILE COMMAND
REDSTONE ARSENAL, ALABAMA

ADAPTER, THRUST

SIZE	FSCM NO.	DRAWING NO.
D	18876	13350001
SCALE: 1/1		SHEET 1 OF 2

DWG NO. 13350001			
REVISIONS			
ZONE	REV	DESCRIPTION	DATE	APPROVED
	D	SEE ECP 1H09020	7/29/09	SBM

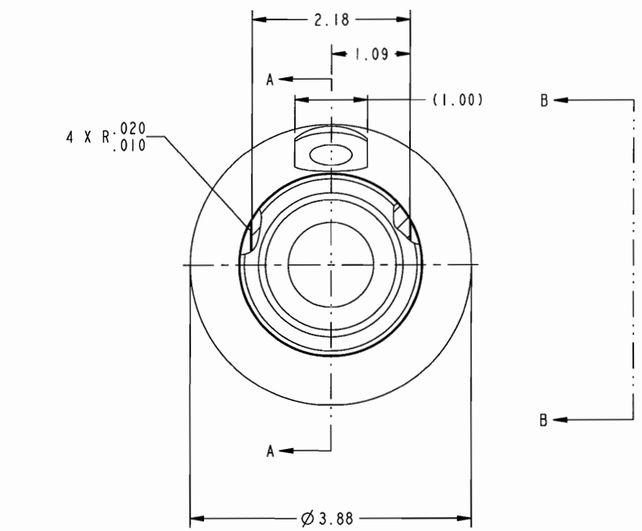

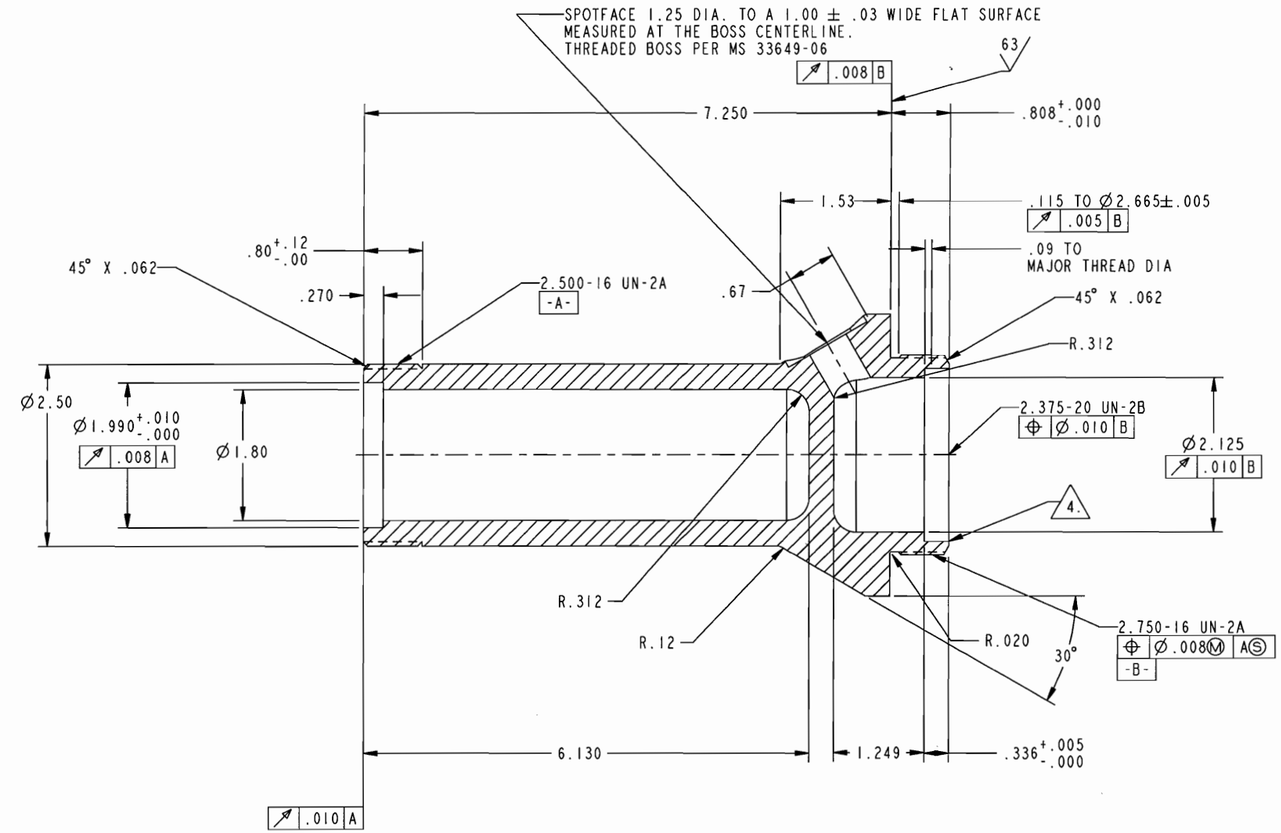

SECTION A-A

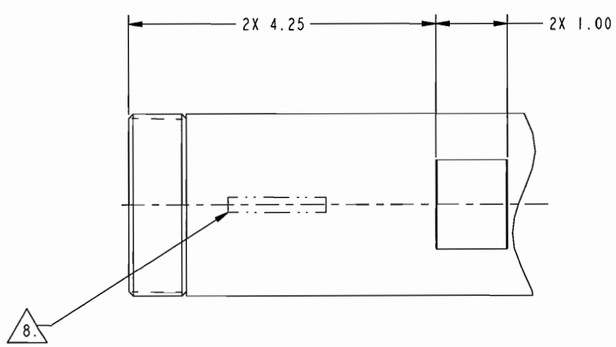

VIEW B-B

NEXT ASSY	USED ON	
APPLICATION		

UNLESS OTHERWISE SPECIFIED
DIMENSIONS ARE IN INCHES
TOLERANCES:
FRACTIONS ±
ANGLES ±
3 PLACE DECIMALS ± .010
2 PLACE DECIMALS ± .03
MATERIAL:

NAVAL ORDNANCE STATION
INDIAN HEAD, MD 20640

	DATE
PREPARED	
CHECKED	
ENGINEER	
SUBMITTED	

APPROVED BY ORDER OF COMMANDER USAMICOM

AUTHENTICATED 12/4/88

U.S. ARMY MISSILE COMMAND
REDSTONE ARSENAL, ALABAMA

ADAPTER, THRUST

SIZE	FSCM NO.	DRAWING NO.
D	18876	13350001
SCALE:		SHEET 2 OF 2