GENERAL NOTES

1. THIS DRAWING PROVIDES INSTRUCTIONS TO MANUFACTURE ONE (1) HULL LEVEL INSERT ASSEMBLY. THE EQUIPMENT WILL BE USED IN AN ENVIRONMENT THAT HAS CLEANLINESS REQUIREMENTS. THEREFORE, CONTRACTOR SHALL ENSURE ALLOWANCES ARE MADE FOR GROOMING ASSEMBLED STRUCTURE AS DESCRIBED IN THIS DRAWING TO FACILITATE CLEANING.

2. WHEN WELDING STANDARDS, MIL-SPECS, OR SIMILAR INSTRUCTIONS ARE NOTED ON THIS DRAWING, THE LATEST REVISION SHALL BE IN EFFECT UNLESS OTHERWISE AUTHORIZED BY PSNS & IMF.

3. UNLESS SPECIFIED OTHERWISE ON THIS DRAWING, ALL TOLERANCES SHALL BE AS INDICATED IN THE DRAWING INFORMATION BLOCK LOCATED AT THE BOTTOM RIGHT CORNER OF EACH PAGE.

4. ORIGINS OF RELATED VIEWS ARE SHOWN IN PARENTHESIS BESIDE VIEWS WHERE DEEMED USEFUL FOR INFORMATION PURPOSES.

5. MATERIAL SUBSTITUTIONS ARE AUTHORIZED PROVIDED THE MATERIAL MEETS OR EXCEEDS THE MECHANICAL, PHYSICAL, AND DIMENSION PROPERTIES SPECIFIED IN THIS DRAWING. STAINLESS STEEL TYPES 304, 304L, 316, 316L, AND 321 ARE CONSIDERED EQUIVALENT WHEN MATERIAL IS GREATER THAN 1/8" THICK. CONTACT PSNS & IMF PRIOR TO INVOKING THIS ALLOWANCE.

6. BREAK ALL SHARP EDGES TO 1/32" CHAMFER (MINIMUM). SURFACE FINISH OF MACHINED SURFACES SHALL BE 250 MICRO-INCHES OR BETTER UNLESS OTHERWISE SPECIFIED.

7. THE USE OF SLOT AND TABS TO INDEX POSITION OF PARTS FOR MANUFACTURE IS ALLOWED. SLOT-TAB JOINT WILL REQUIRE PLUG WELDING AND GROUND FLUSH.

8. THE USE OF ETCHING ON MATERIAL FOR ALIGNMENT IS ALSO ALLOWED.

9. FOR EASE OF IDENTIFICATION DURING AND AFTER FABRICATION AND PAINTING, THE PIECE NUMBER MAY BE CUT INTO THE FLANGE AREA OF THE MATERIAL. NUMBERS SHALL BE ½" HIGH. STAINLESS PIECES MAY BE LASER ETCHED WITH PIECE NUMBER.

10. ITEMS THAT CAN NOT BE BENT AS SHOWN, MAY BE MANUFACTURED IN TWO OR THREE PIECES AND WELDED TOGETHER PER NOTE 11 TO MEE T THE DIMENSIONS OF THE DRAWING.

11. **WELDING REQUIREMENTS**:

    A. WELDING SHALL BE IN ACCORDANCE WITH AWS D1.6.

    B. WELDS ASSOCIATED WITH LIFTING ATTACHMENTS SHALL BE MADE TO THE SIZE SHOWN. ALL OTHER WELDS SHOWN ARE THE MINIMUM SIZE.

    C. MINIMUM BEVEL ANGLE ON ALL BEVEL WELDS IS 45 DEGREES PER SINGLE BEVEL. WHEN WELD SIZE FOR GROOVE WELDS IS NOT SPECIFIED, THE REQUIRED MINIMUM EFFECTIVE THROAT IS THE DEPTH OF THE GROOVE.

    D. CORNERS MAY BE CHAMFERED TO CLEAR EXISTING PREVIOUSLY DEPOSITED WELDS. CLOSE CHAMFERS BY WELDING WHEN INVOKING THIS ALLOWANCE.

    E. WELDS SHALL BE SEQUENCED TO MINIMIZE DISTORTION. IF WELDS ARE APPLIED LARGER THAN SHOWN, TAKE PRECAUTIONS AS NECESSARY TO CONTROL HEAT INPUT TO MINIMIZE POTENTIAL FOR DISTORTION. IF DISTORTION DOES OCCUR, STRAIGHTENING SHALL BE PERFORMED PER AWS D1.6.

    F. VISUALLY INSPECT WELDS PER AWS D1.6.

    G. WELD SURFACE FINISH SHALL SATISFY GENERAL NOTE 11.

    H. CONTINUOUS FULL THICKNESS CORNER AND BUTT WELD SPLICES IN PLATE, PIPE, OR FLAT BAR ARE PERMITTED TO FACILITATE ASSEMBLY. ANY SPLICES MADE, UNLESS OTHERWISE NOTED, SHALL BE FULL PENETRATION AND SHALL BE IN ACCORDANCE WITH AWS D1.6.

    I. IN ADDITION TO THOSE CLEARLY SHOWN, SEAL WELD CREVICED JOINTS WITH WELD MATERIAL TO ELIMINATE CREVICES TO ELIMINATE JOINTS THAT COULD TRAP LOOSE MATERIALS THAT WOULD BE UNDESIRABLE IN A CLEAN AREA (I.E. DIRT, METAL SHAVINGS, ETC.). SEAL WELDS ARE NOT CONSIDERED STRUCTURAL WELDS AND NEED NOT SATISFY SIZE OR PROFILE REQUIREMENTS OF AWS D1.6. HOWEVER, WELDS SHALL MEET THE SURFACE FINISH REQUIREMENTS OF GENERAL NOTE 11.

    J. OPEN ENDS OF PIPE OR TUBE SHALL BE CAPPED WITH SIMILAR MATERIAL AND SEAL WELDED TO CLOSE OPENING.

    K. ANY WELDS OR BASE MATERIAL THAT SPECIFIES LIQUID PENETRANT TESTS (PT) SHALL BE PT INSPECTED PER NAVSEA TECHNICAL PUBLICATION T9074-AA-GIB-010/271. ACCEPTANCE CRITERIA IS MIL-STD-2035, FORGINGS AND WROUGHT MATERIAL FOR BASE METAL, AND CLASS (3) FOR WELDS.

12. **SURFACE FINISH**: WELDED SURFACES SHALL BE FREE OF CRACKS, CRATERS, BURRS, SHARP EDGES AND WELD SPLATTER. THE WELD SURFACE SHALL GENERALLY SMOOTH TO THE TOUCH. CONTOUR GRINDING MAY BE NECESSARY DEPENDING ON THE WELD PROCESS, MATERIAL, AND DESIGN. THE REMAINING SURFACES SHALL BE FREE OF WELD SPLATTER, DEEP SCRATCHES, BURRS, DIRT, & LOOSE RUST. IN GENERAL ALL SURFACES SHALL BE SMOOTH ENOUGH TO PERMIT WIPING SURFACES WITH CLEANING CLOTH WITHOUT SNAGGING THE CLOTH. DO NOT PAINT OR MARK STAINLESS STEEL WITH ANY PRODUCTS THAT CANNOT BE COMPLETELY REMOVED WITH A CLEANING CLOTH. GLASS BEAD BLASTING MAY BE OPTIONALLY USED BY CONTRACTOR TO IMPROVE SURFACE FINISH OF STAINLESS STEEL MEMBERS OF STRUCTURE.FOLLOWING INITIAL GROOMING. IF GLASS BEAD BLASTING IS USED, MASK THREADED HOLES AND ANY SURFACES (E.G. LIFT ATTACHMENTS) THAT ARE REQUIRED BY THIS DRAWING TO HAVE A DYE PENENTRANT (PT) INSPECTION AND BLAST STAINLESS STEEL TO A SATIN FINISH. DO NOT USE METAL SHOT. ENSURE ALL GLASS BEAD BLAST MATERIAL IS CLEANED FROM STRUCTURE (IF BLASTING IS PERFORMED).

13. **GRAVIGATES**: GRAVIGATES SHALL BE OF STAINLESS STEEL CONSTRUCTION AND SHALL BE PROVIDED AS SHOWN IN DETAIL VIEWS 41C OF THIS DRAWING (NOTE THAT THE TWO (2) GATES USE RIGHT HANDED GRAVIGATE HINGES). ENSURE GATES ARE PROPLERY ALIGNED DURING INSTALLATION. GATES SHALL SWING FROM THE OPEN TO THE CLOSED POSITION VIA GRAVITY WHEN PROPERLY INSTALLED. CONTRACTOR MAY OPTIONALLY MANUFACTURE SQUARE TUBE FRAME OF GATE TO THE DIMENSIONS SHOWN. HOWEVER, THE HINGES USED SHALL BE "GRAVIGATE" AND MOUNTING LOCATION AND ORIENTATION SHALL BE AS SHOWN IN THIS DRAWING.

14. **BENDING**: FOR PIECES OF MATERIAL LIST THAT INVOLVE BENDING OF MATERIAL, THE MATERIAL LIST OF THIS DRAWING PROVIDES THE APPROXIMATE LENGTH OF THE COMPONENTS THAT WILL REQUIRE BENDING. THE BENDING PROCESS USED MAY REQUIRE ADDITIONAL MATERIAL FOR CLAMPING DURING BENDING OPERATIONS. CONTRACTOR SHALL PLAN FOR ADDITIONAL MATERIAL AS NECESSARY TO ACHIEVE THE MATERIAL PROFILES SPECIFIED IN THIS DRAWING. WHEN BENDING PIPE TO MAKE HANDRAILS, BENDING RADIUS CAN RANGE ANYWHERE FROM 2" TO 6" (SMALLER RADIUS IS PREFERRED).

15. **PAINTING OF OS STEEL**: N/A

16. **WEIGHING, LOAD TEST AND NDT**: WEIGH, LOAD TEST, AND PERFORM NDT AS SHOWN ON SHEET 16 OF THIS DRAWING.

17. **CHECK-FIT OF COMPONENTS**: CONTRACTOR SHALL PERFORM THE FOLLOWING CHECK-FITS (AS A MINIMUM).

    A. INSTALL EACH HANDRAIL ASSEMBLY IN THE LOCATIONS SHOWN IN THIS DRAWING. GRAVIGATE SWING-GATES SHALL CLOSE SMOOTHLY AND SHALL STRIKE ADJACENT HANDRAIL AS SHOWN IN ISO VIEW 11B AND 14A OF THIS DRAWING.

18. **SHIPPING**: THE HULL LEVEL INSERT ASSEMBLY SHALL BE ASSEMBLED FOR SHIPPING. ENSURE ALL COMPONENTS ARE CLEANED PRIOR TO SHIPPING (I.E. ENSURE ALL COMPONENTS ARE WIPE CLEAN OF LOOSE DIRT, OIL, GRIT, ETC.) ANY FASTENERS OR COMPONENTS SHIPPED SEPARATE FROM THE STRUCTURE SHALL BE PACKAGED IN A MANNER THAT WILL PREVENT DAMAGE DURING SHIPMENT AND SHALL BE CLEARLY MARKED WITH DRAWING DWG 2301-3711 AND PIECE NUMBERS TO ENSURE MATERIALS CAN BE READILY IDENTIFIED UPON DELIVERY.

REFERENCES

1. AWS D1.6; STRUCTURAL WELDING CODE – STAINLESS STEEL
2. NAVSEA TECHNICAL PUBLICATION T9074-AS-GIB-010/271; REQUIREMENTS FOR NON-DESTRUCTIVE TEST METHODS
3. MIL-STD-2035; NONDESTRUCTIVE TESTING ACCEPTANCE CRITERIA.
4. HULL LEVEL INSERT ASSEMBLY; PSNS & IMF EVALUATION OF LIFT ATTACHMENTS (FOR PSNS & IMF USE ONLY).
5. PSNS DWG. 2301-3411; TORQUED-BASED PROOF TEST FOR SAFETY HOIST RING LIFT HOLES AND NDT FOR LIFTING ATTACHMENTS

DISTRIBUTION STATEMENT: *N/A*

A.D.C REVIEW	
SIGNATURE	DATE
/S/ Jim Byrnes	1/15/2010

CONCURRENCE		
CODE	SIGNATURE	DATE
2370.21	/S/ Eines Caselli	1/15/10

/S/ SIGNATURE ON FILE APPROVAL		
	SIGNATURE	DATE
BRANCH SUPV:	/S/ Jim Byrnes	1/15/2010
CHECKED	/S/ John Tassell	15 JAN 2010
DRAWN		
DRAWN	/S/ Mark Ekanian	1-15-2010
DESIGNED	/S/ Mark Ekanian	1-15-2010
FILE PATH		

PUGET SOUND NAVAL SHIPYARD
CODE 2370
ENGINEERING DIVISION

NO DEVIATIONS SHALL BE MADE WITHOUT CODE 2370 APPROVAL

Unless otherwise specified, dimensions are in inches.
Decimals:
X.X = ±0.13
X.XX = ±0.025
X.XXX = ±0.0031
X.XXXX = ±0.0005
Fractions = ±1/16 < 36"
Fractions = ±1/8 > 36"
Angles = ±0.5°
Drawing dimensional and geometric tolerances per ASME Y14.5M-1994

DRAWING NO.	FSR	RF #
2301-3711	2370-2192	N/A

TITLE
HULL LEVEL INSERT

SCALE		REV
AS SHOWN	Sheet 1 of 16	ORIG

SHEET 1
REV ORIG
TITLE HULL LEVEL INSERT
DWG NO 2301-3711

LIST OF MATERIALS

PC#	QTY	DESCRIPTION	MATERIAL	MAT SPEC	Panel	REMARKS
001	1	PL, 1/4"	Stainless steel	TYPE 304	48A	
002	1	PL, 1/4"	Stainless steel	TYPE 304	54C	
003	1	PL, 1/4"	Stainless steel	TYPE 304	54B	
004	1	PL, 1/4"	Stainless steel	TYPE 304	54A	
005	1	PL, 1/4"	Stainless steel	TYPE 304	63A	
006	1	PL, 1/4"	Stainless steel	TYPE 304	56D	
007	1	PL, 1/4"	Stainless steel	TYPE 304	54A	
008	1	PL, 3/8"	Stainless steel	TYPE 304	58A	
009	1	PL, 1/4"	Stainless steel	TYPE 304	65A	
010	1	PL, 3/8"	Stainless steel	TYPE 304	60A	
011	1	PL, 1/4"	Stainless steel	TYPE 304	56D	
012	1	PL, 1/4"	Stainless steel	TYPE 304	59C	
013	4	BAR, SQUARE, 3" x 3" x 5" LG	Stainless steel	TYPE 304	56C	
014	2	PL, 1/4"	Stainless steel	TYPE 304	59D	
015	2	PL, 1/4"	Stainless steel	TYPE 304	61A	
016	1	PL, 1/4"	Stainless steel	TYPE 304	63A	
017	1	PL, 1/4"	Stainless steel	TYPE 304	61D	
018	1	PL, 1/4"	Stainless steel	TYPE 304	61D	
019	1	PL, 1/4"	Stainless steel	TYPE 304	62D	
020	8	PL, 1/4"	Stainless steel	TYPE 304	63D	
021	1	PL, 1/4"	Stainless steel	TYPE 304	62D	
022	1	PL, 3/8"	Stainless steel	TYPE 304	60A	
023	1	PL, 1/4"	Stainless Steel, 304	TYPE 304	65A	
024	1	PL, 3/8"	Stainless steel	TYPE 304	58A	
025	4	PL, 1/4"	Stainless steel	TYPE 304	56B	
026	4	PL, 3/16"	Stainless steel	TYPE 304	65C	
027	4	PL, 3/16"	Stainless steel	TYPE 304	65D	
028	2	PL, 3/16"	Stainless steel	TYPE 304	63C	
029	2	PL, 3/16"	Stainless steel	TYPE 304	65B	
030	2	PL, 3/16"	Stainless steel	TYPE 304	63B	
031	20	PL, 1/4"	Stainless steel	TYPE 304	69A	
032	2	PL, 1/4"	Stainless steel	TYPE 304	70D	
033	10	Sheeet, 11 ga	Stainless steel	TYPE 304	70B	
034	10	PL, 3/16"	Stainless steel	TYPE 304	67B	
035	10	PL, 3/16"	Stainless steel	TYPE 304	69B	
036	4	Sheet, 11 ga	Stainless steel	TYPE 304	66B	
037	4	Sheet, 11 ga	Stainless steel	TYPE 304	67A	
038	2	PL, 1/4"	Stainless steel	TYPE 304	68C	
039	4	Sheet, 11ga	Stainless steel	TYPE 304	66A	
040	4	Sheet, 11 ga	Stainless steel	TYPE 304	68A	
041	2	PL, 1/4"	Stainless steel	TYPE 304	68D	

LIST OF MATERIALS (continued)

PC#	QTY	DESCRIPTION	MATERIAL	MAT SPEC	Panel	REMARKS
042	2	Sheet, 11 ga	Stainless steel	TYPE 304	66C	
043	2	PL, 1/4"	Stainless steel	TYPE 304	66D	
044	2	PL, 1/4"	Stainless steel	TYPE 304	70C	
045	8	PL, 1/4" x 4" x 4"	Stainless steel	TYPE 304	62A	
046	16	PL, 3/4" x 4 3/4" x 4 3/4"	Stainless steel	TYPE 304	61B	
047	2	PL, 1/4"	Stainless steel	TYPE 304	71A	
048	1	PL, 1/4"	Stainless steel	TYPE 304	59C	
049	64	STUD, Threaded, 3/8-16 UNC x 1-1/4" LG	Stainless steel	Type 316	32C	McMaster Carr #90575A628
050	48	Washer, Flat for 3/4" Capscrew	Stainless steel	Type 18-18	45A	McMaster Carr #96659A112
051	24	Nut, Hex, WITH NYLON INSERT, 3/4-10 UNC	Stainless steel	Type 18-18	45A	McMaster Carr #91831A147
052	24	Screw, Cap, Hex Head, 3/4-10 UNC x 2 3/4" LG	Stainless steel	Type 316	45A	McMaster Carr #92186A846
053	4	PL, 1/2"	Stainless steel	TYPE 304	74A	
054	4	PL, 1/2"	Stainless steel	TYPE 304	72A	
055	4	PL, 1/2"	Stainless steel	TYPE 304	73A	
056	24	Nut, Hex, WITH NYLON INSERT, 1-8UNC	Stainless steel	Type 18-18	45B	McMaster Carr #91831A038
057	40	Washer, Flat for 1" Capscrew	Stainless steel	Type 18-18	45B	McMaster Carr #96659A113
058	16	Screw, Cap, Hex Head, 1-8 UNC x 2 1/2" LG	Stainless steel	Type 316	45B	McMaster Carr #93190A914
059	16	Stanchion Base, Flanged, for 1 1/2" IPS SCH 40	Aluminum, 1060	Commercial	13D	Julius Blum #7571
060	16	Safety Snap Pin	Stainless Steel	Stainless	13D	McMaster-CARR PN# 98480A135 or equivalent
062	AR	Pipe, 1 1/2" IPS x 47'-0" APPROX. TOTAL LG	Stainless Steel, 304	TYPE 304	34A	
063	AR	Pipe, 1 1/2" IPS x 38'-0" APPROX. TOTAL LG	Stainless Steel, 310	TYPE 304	34B	
064	AR	Pipe, 1 1/2" IPS x 34'-0" APPROX. TOTAL LG	Stainless Steel, 304	TYPE 304	32C	
065	AR	Pipe, 1 1/2" IPS x 34'-0" APPROX. TOTAL LG	Stainless Steel, 304	TYPE 304	34C	
066	8	Bar, Round, 2 1/8" x 7" LG	Stainless steel	TYPE 304	71A	MACHINE TO SIZE
067	2	Gravigate, RH swing, 24" x 21 1/2",	Stainless Steel	Commercial	41C	Gravigate
069	8	U-Bolt, 5/16-18 UNC for 1 1/2" IPS pipe	Stainless steel	Type 316	42A	McMaster Carr #29605TS
070	16	Washer, Flat, for 5/16" bolt	Stainless steel	Type 18-18	42A	McMaster Carr #96659A107
071	16	Nut, hex with nylon insert, 5/16-18 UNC	Stainless steel	Type 18-18	42A	McMaster Carr #91831A030
072	226	Nut, HEX with Nylon INSERT, 3/8-16 UNC	Stainless steel	Type 18-8	36D	McMaster Carr #91831A127
073	310	Flat Washer, 3/8"	Stainless steel	Type 18-18	9	McMaster Carr #9665A108 or equivalent
074	162	Capscrew, Hex, 3/8"-16 UNC x 1-1/4" lg	Stainless Steel	Type 316	43A	McMaster Carr #93190A626

PUGET SOUND NAVAL SHIPYARD
CODE 2370
ENGINEERING DIVISION

NO DEVIATIONS SHALL BE MADE
WITHOUT CODE 2370 APPROVAL

Unless otherwise specified, dimensions are in inches.

Decimals:
X.X = ±0.13
X.XX = ±0.025
X.XXX = ±0.0031
X.XXXX = ±0.0005
Fractions = ±1/16 < 36"
Fractions = ±1/8 > 36"
Angles = ±0.5°

Drawing dimensional and geometric tolerances per ASME Y14.5M-1994

DRAWING NO.	FSR	RF #
2301-3711	2370-2192	N/A

TITLE
HULL LEVEL INSERT

SCALE AS SHOWN | **Sheet 2 of 16** | REV **ORIG**

REV: ORIG | SHEET: 2
TITLE: HULL LEVEL INSERT
DWG. NO. 2301-3711

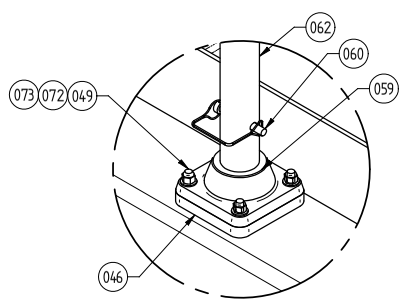

DETAIL VIEW 15D (11B)
HANDRAIL STANCHION BASE CONNECTION
(TYPICAL)

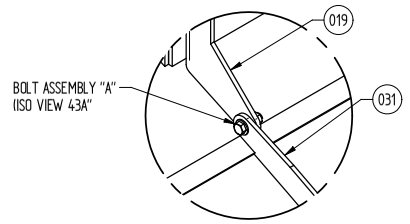

DETAIL VIEW 14D (11B)
HINGE CONNECTION
(TYPICAL)

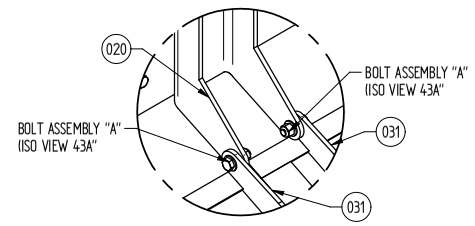

DETAIL VIEW 13D (11B)
HINGE CONNECTION
(TYPICAL)

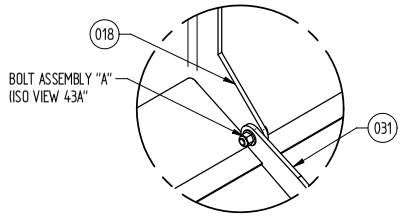

DETAIL VIEW 15C (11B)
HINGE CONNECTION
(TYPICAL)

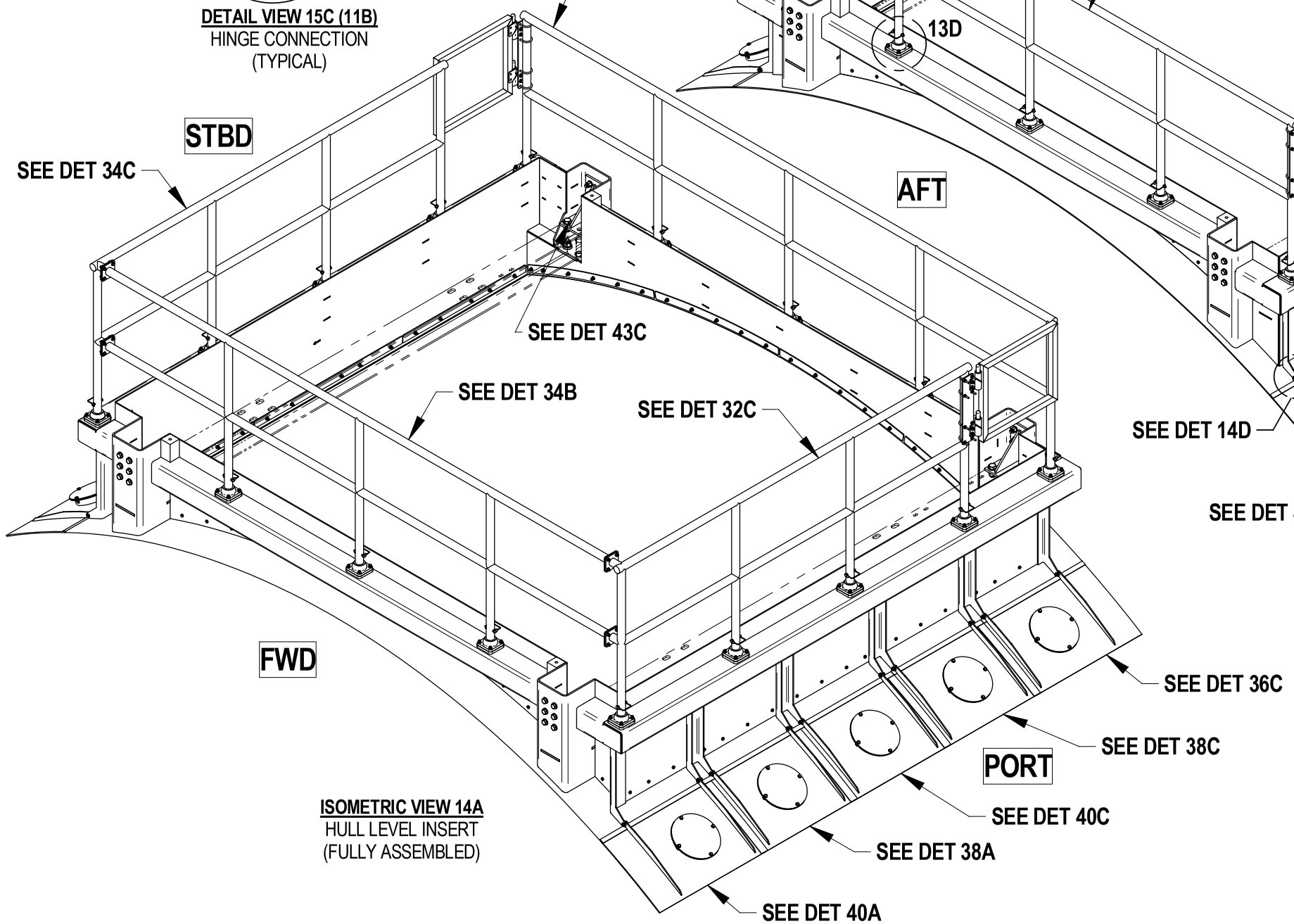

ISOMETRIC VIEW 14A
HULL LEVEL INSERT
(FULLY ASSEMBLED)

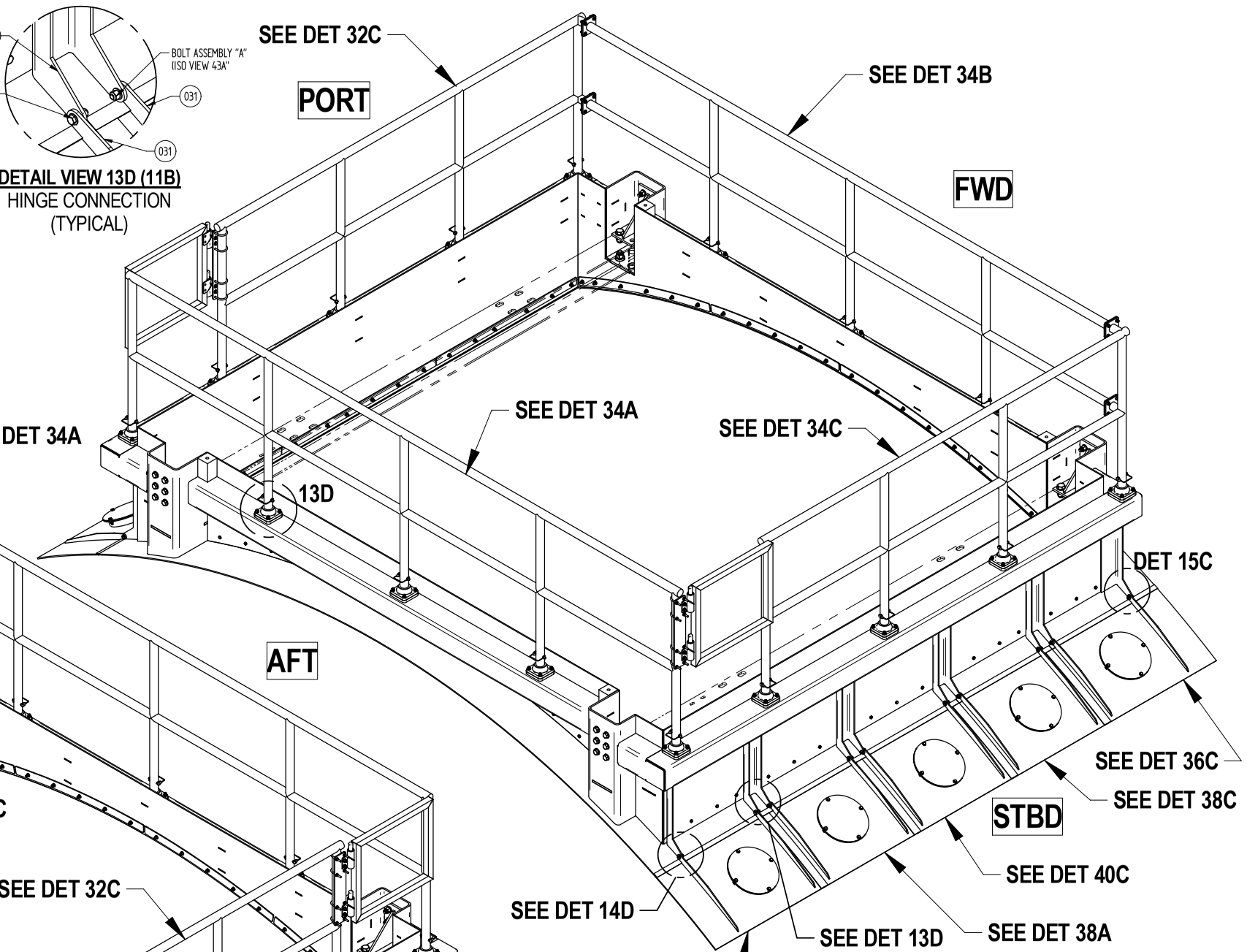

ISOMETRIC VIEW 11B
HULL LEVEL INSERT
(FULLY ASSEMBLED)

Unless otherwise specified, dimensions are in inches. Decimals: X.X = ±0.13, X.XX = ±0.025, X.XXX = ±0.0031, X.XXXX = ±0.0005, Fractions = ±1/16 < 36", Fractions = ±1/8 > 36", Angles = ±0.5°. Drawing dimensional and geometric tolerances per: ASME Y14.5M-1994	PUGET SOUND NAVAL SHIPYARD CODE 2370 ENGINEERING DIVISION
	NO DEVIATIONS SHALL BE MADE WITHOUT CODE 2370 APPROVAL
	DRAWING NO.: 2301-3711 · FSR: 2370-2192 · RF#: N/A
	TITLE: HULL LEVEL INSERT
	SCALE: AS SHOWN · Sheet 3 of 16 · REV: ORIG

TITLE: HULL LEVEL INSERT · DWG. NO.: 2301-3711 · REV: ORIG · SHEET: 3

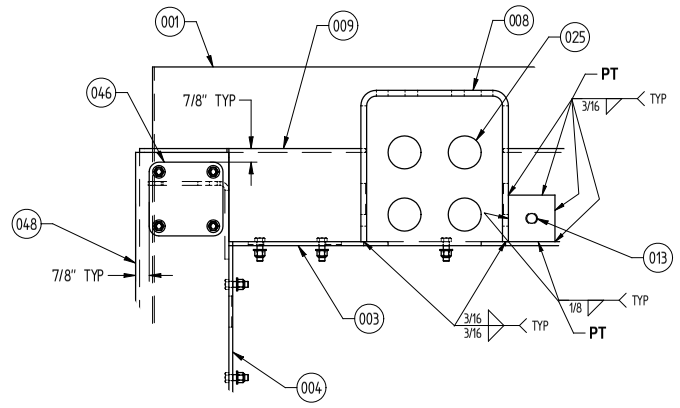

DETAIL VIEW 20D (17A)

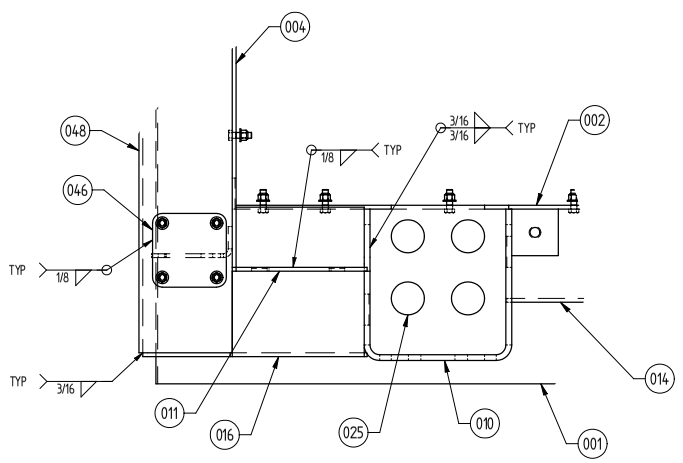

DETAIL VIEW 20B (17A)

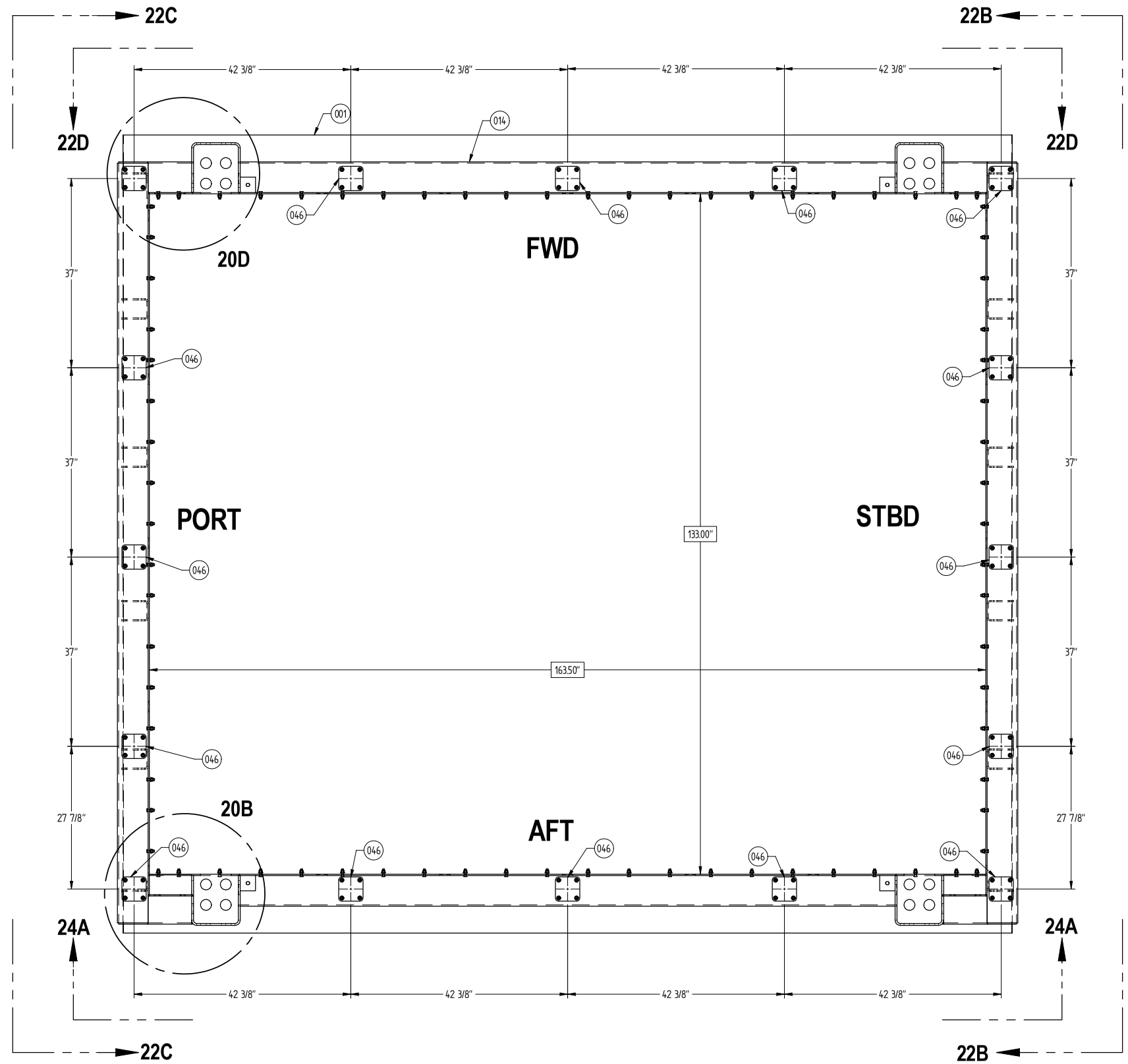

PLAN VIEW 17A
HULL LEVEL INSERT
(WELDMENT)

PUGET SOUND NAVAL SHIPYARD
CODE 2370
ENGINEERING DIVISION

NO DEVIATIONS SHALL BE MADE
WITHOUT CODE 2370 APPROVAL

Unless otherwise specified, dimensions are in inches.
Decimals:
X.X = ±0.13
X.XX = ±0.025
X.XXX = ±0.0031
X.XXXX = ±0.0005
Fractions = ± 1/16 < 36"
Fractions = ± 1/8 > 36"
Angles = ±0.5°
Drawing dimensional and geometric tolerances per ASME Y14.5M-1994

DRAWING NO.	FSR	RF #
2301-3711	2370-2192	N/A

TITLE
HULL LEVEL INSERT

SCALE		REV
AS SHOWN	Sheet 4 of 16	ORIG

DWG. NO. 2301-3711
TITLE HULL LEVEL INSERT
REV ORIG SHEET 4

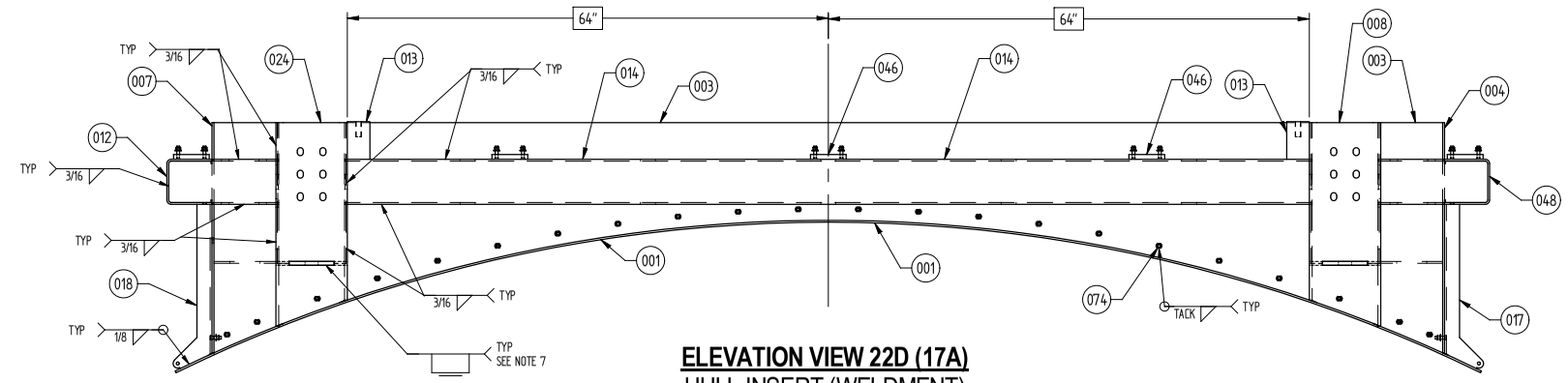

ELEVATION VIEW 22D (17A)
HULL INSERT (WELDMENT)
FWD END

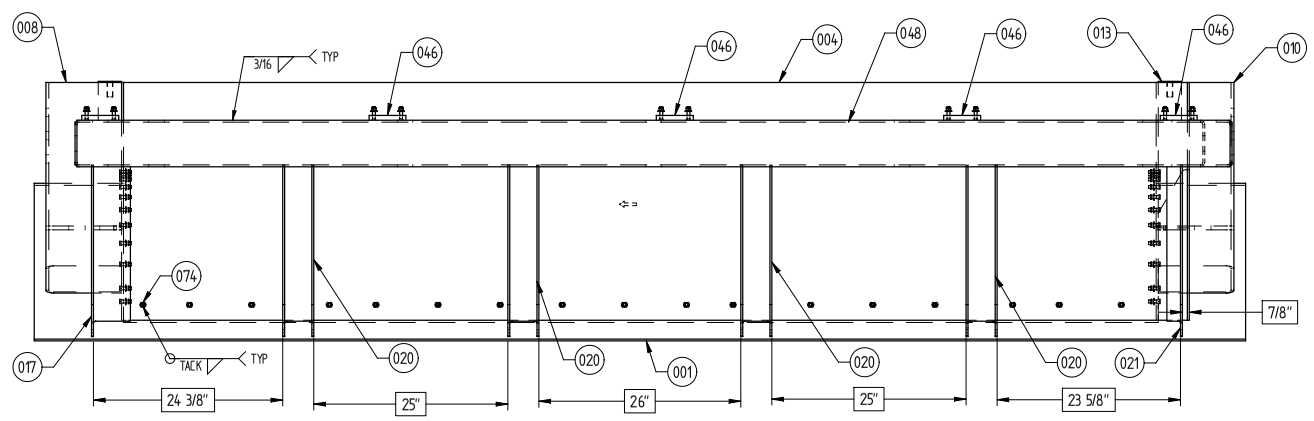

ELEVATION VIEW 22C (17A)
HULL LEVEL INSERT (WELDMENT)
PORT SIDE

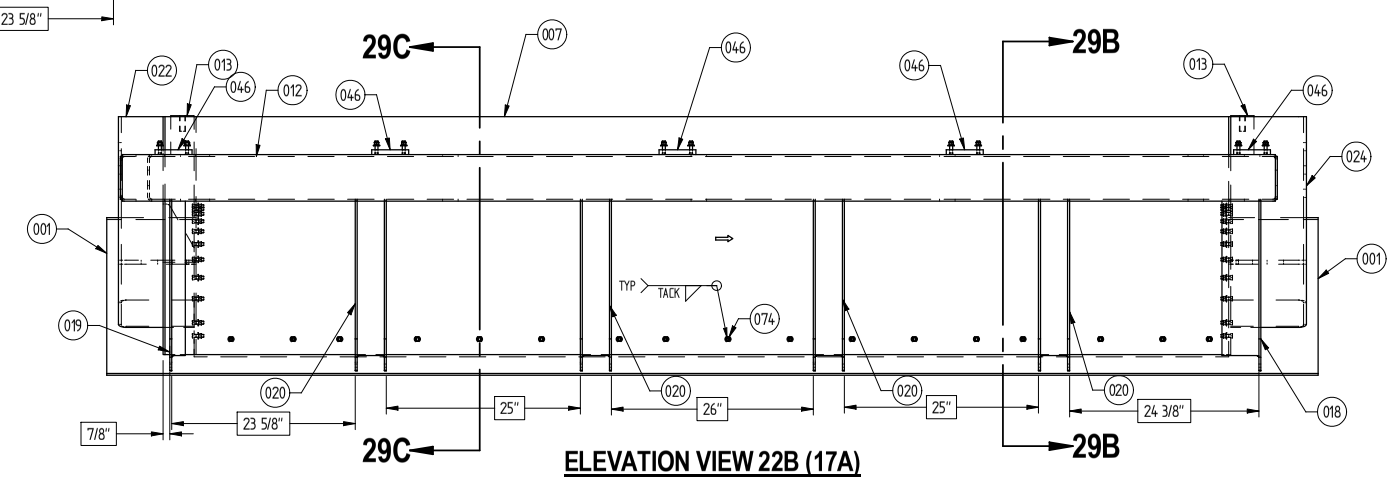

ELEVATION VIEW 22B (17A)
HULL INSERT WELDMENT
STBD SIDE

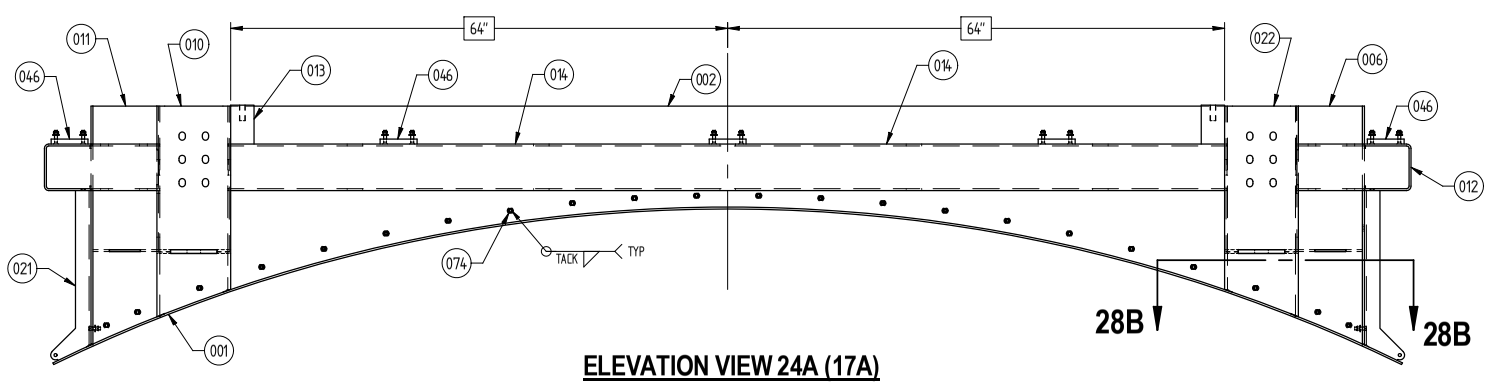

ELEVATION VIEW 24A (17A)
HULL INSERT WELDMENT
AFT END

PUGET SOUND NAVAL SHIPYARD
CODE 2370
ENGINEERING DIVISION

Unless otherwise specified, dimensions are in inches.
Decimals:
X.X = ±0.13
X.XX = ±0.025
X.XXX = ±0.0031
X.XXXX = ±0.0005
Fractions = ±1/16 < 36"
Fractions = ±1/8 > 36"
Angles = ±0.5°
Drawing dimensional and geometric tolerances per ASME Y14.5M-1994

NO DEVIATIONS SHALL BE MADE WITHOUT CODE 2370 APPROVAL

DRAWING NO.	FSR	REF #
2301-3711	2370-2192	N/A

TITLE
HULL LEVEL INSERT

SCALE AS SHOWN | **Sheet 5 of 16** | REV **ORIG**

SHEET 5 | REV ORIG | TITLE HULL LEVEL INSERT | DWG. NO. 2301-3711

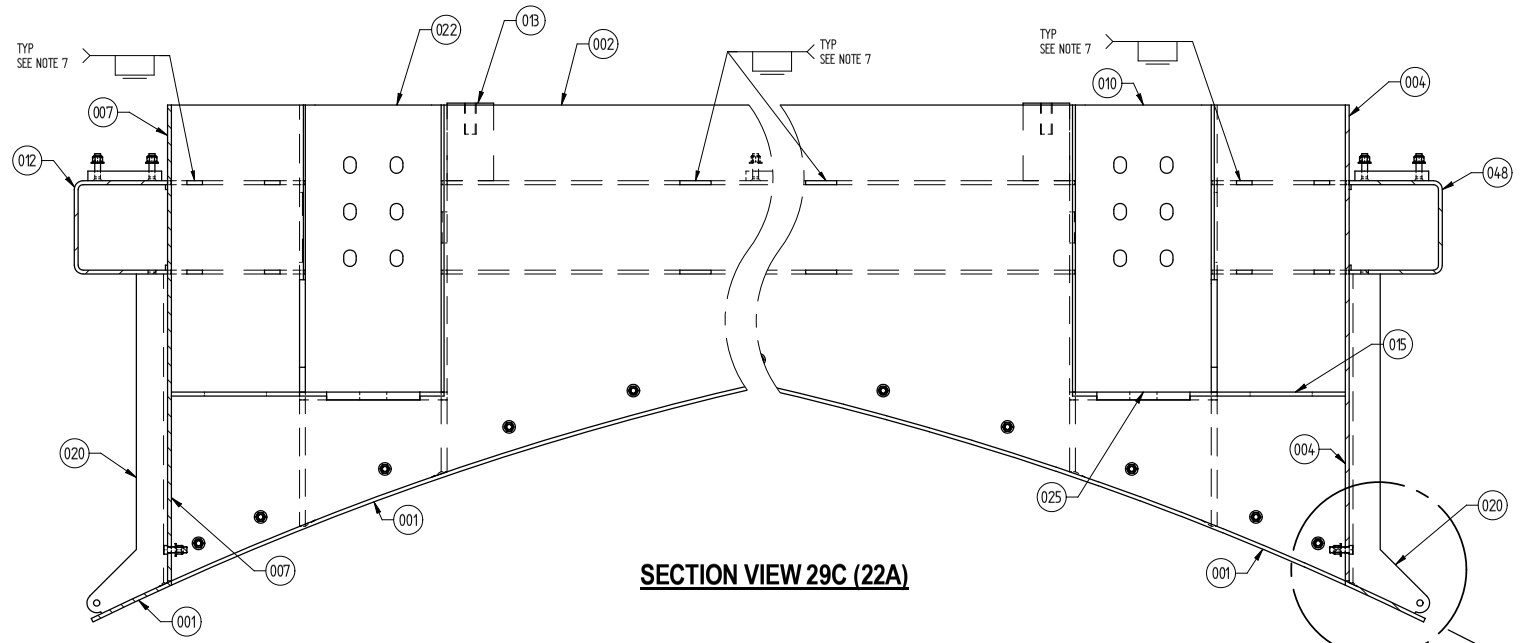

SECTION VIEW 29C (22A)

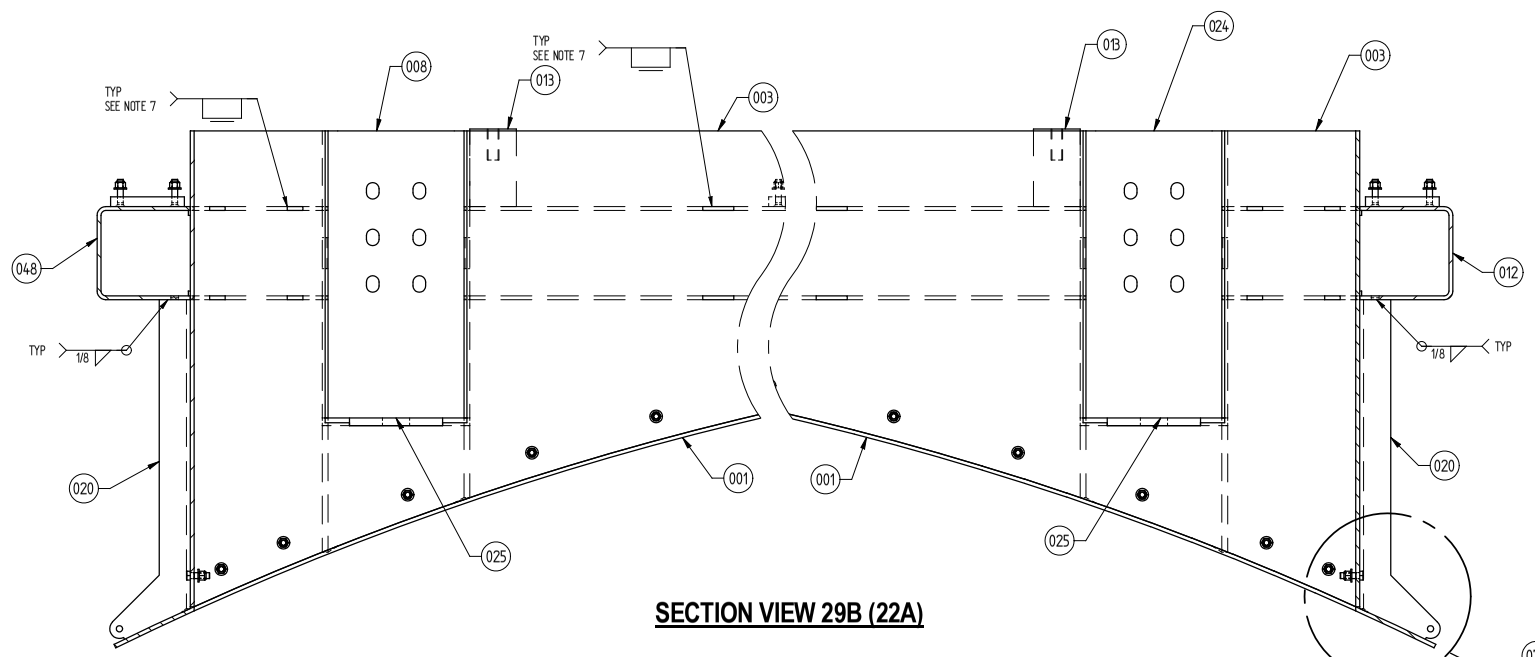

SECTION VIEW 29B (22A)

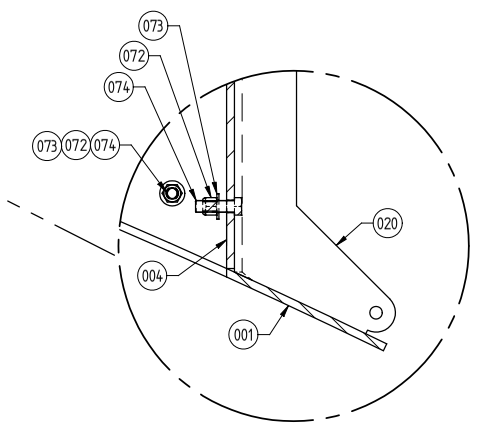

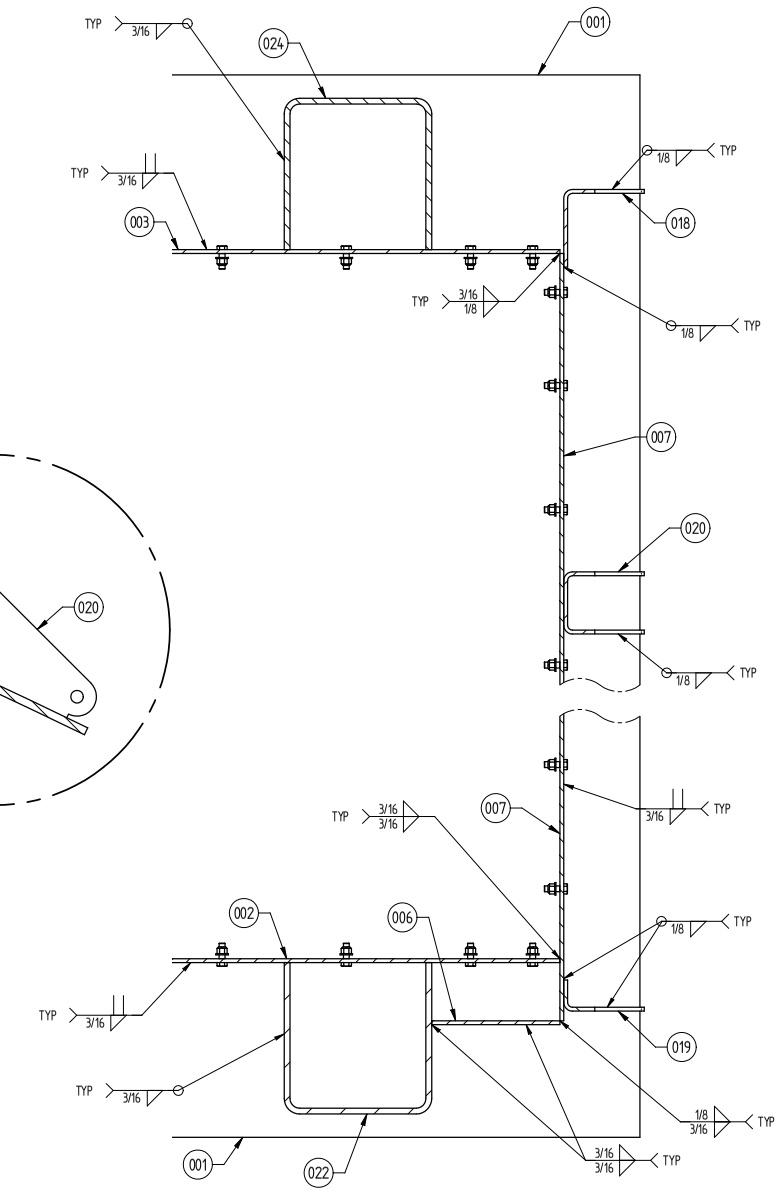

SECTION VIEW 28B (22A)

Unless otherwise specified, dimensions are in inches. Decimals: X.X = ±0.13 X.XX = ±0.025 X.XXX = ±0.0031 X.XXXX = ±0.0005 Fractions = ±1/16 < 36" Fractions = ±1/8 > 36" Angles = ±0.5° Drawing dimensional and geometric tolerances per ASME Y14.5M-1994	**PUGET SOUND NAVAL SHIPYARD** CODE 2370 ENGINEERING DIVISION
	NO DEVIATIONS SHALL BE MADE WITHOUT CODE 2370 APPROVAL
	DRAWING NO. **2301-3711** · FSR **2370-2192** · REF # **N/A**
	TITLE **HULL LEVEL INSERT**
	SCALE AS SHOWN · **Sheet 6 of 16** · REV. **ORIG**

TITLE HULL LEVEL INSERT · DWG. NO. 2301-3711 · REV. ORIG · SHEET 6

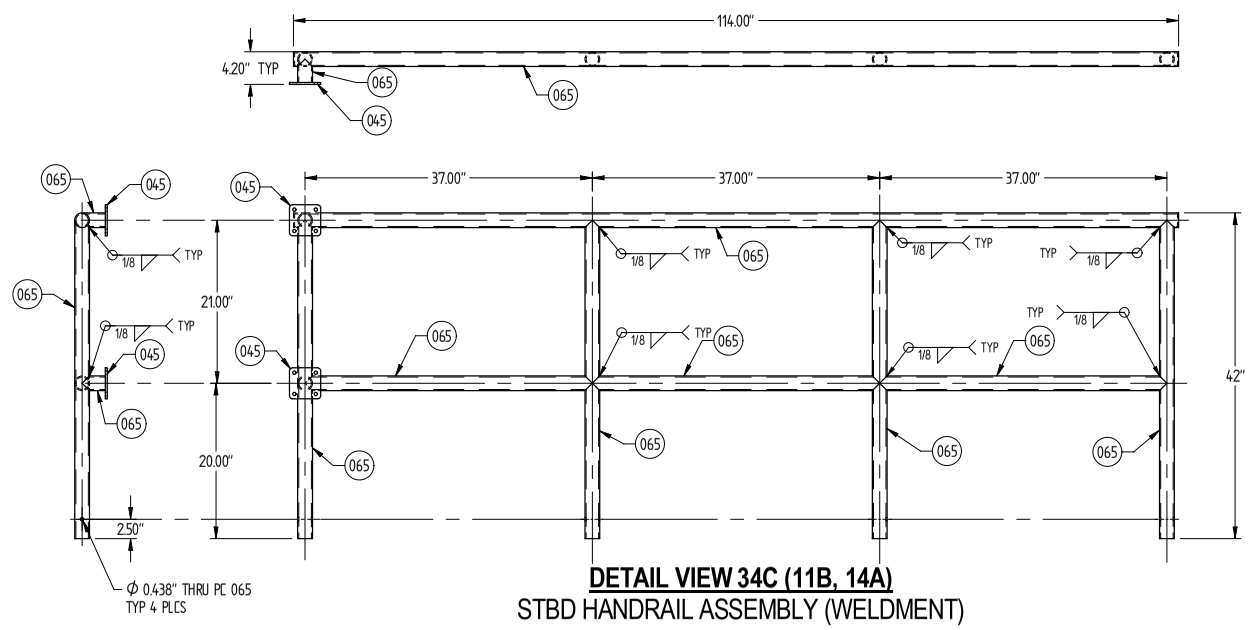

DETAIL VIEW 34C (11B, 14A)
STBD HANDRAIL ASSEMBLY (WELDMENT)

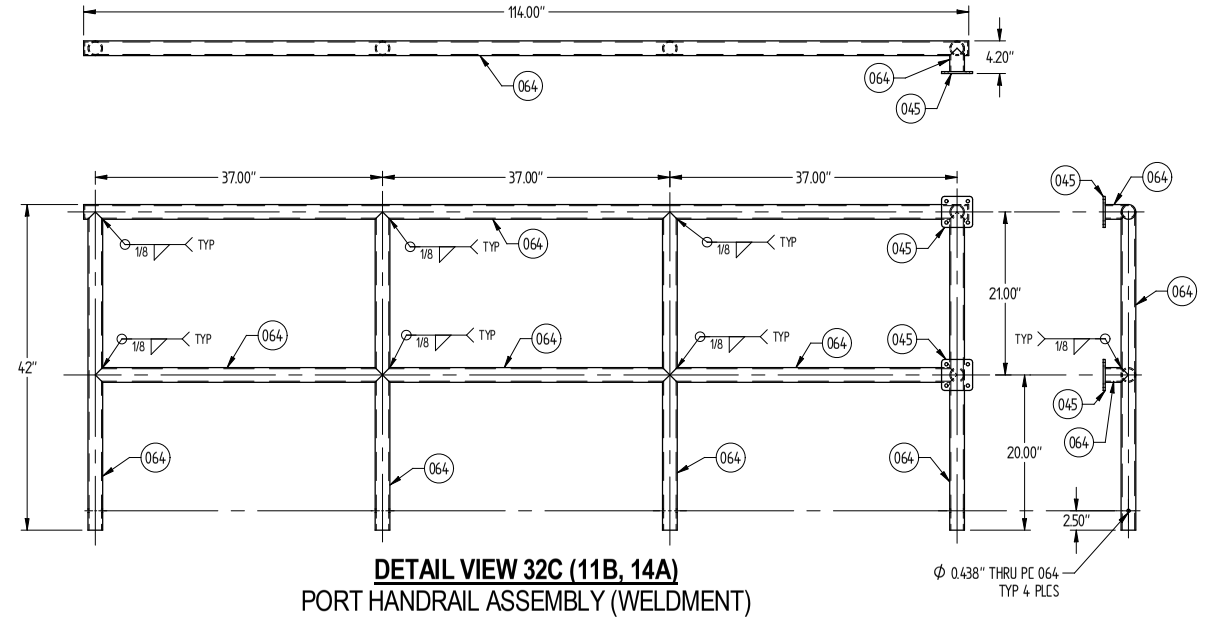

DETAIL VIEW 32C (11B, 14A)
PORT HANDRAIL ASSEMBLY (WELDMENT)

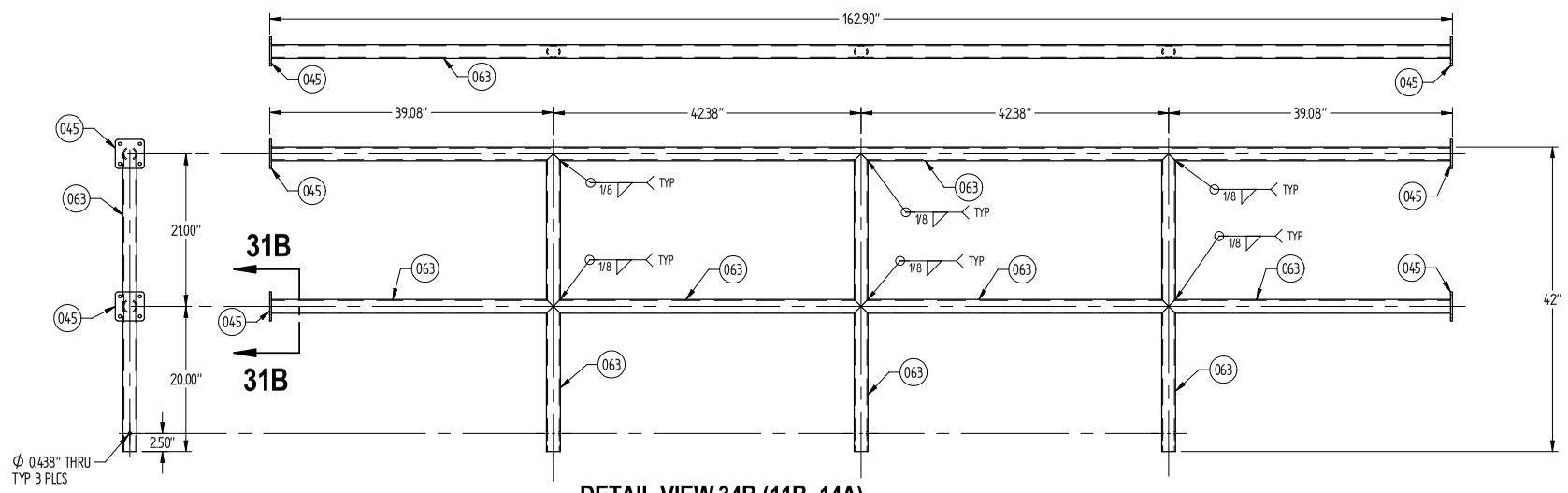

DETAIL VIEW 34B (11B, 14A)
FWD HANDRAIL ASSEMBLY (WELDMENT)

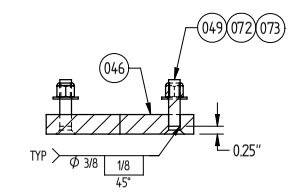

SECTION VIEW 32C (31C)

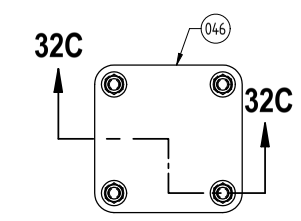

PLAN VIEW 31B
HANDRAIL BASE ASSEMBLY
(WELDMENT)

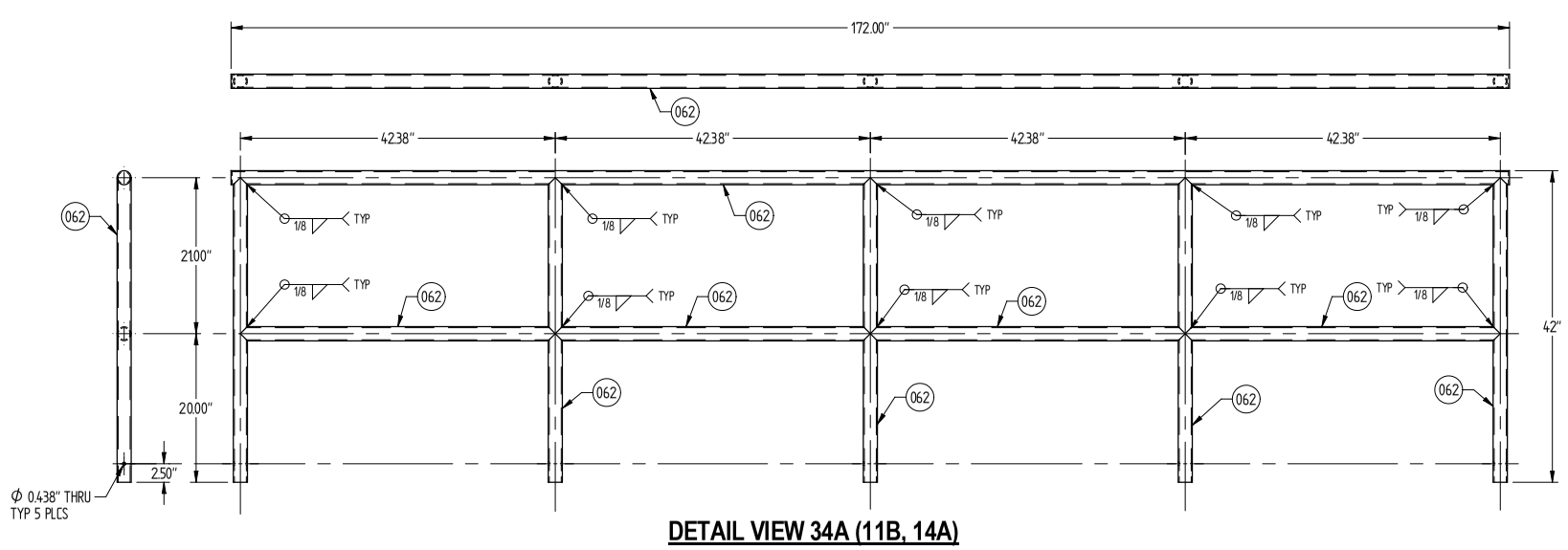

DETAIL VIEW 34A (11B, 14A)
AFT HANDRAIL ASSEMBLY (WELDMENT)

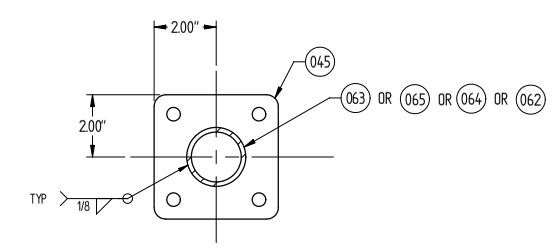

SECTION VIEW 31A (34B)
HANDRAIL BOLTING FLANGE
(WELDMENT) TYPICAL

PUGET SOUND NAVAL SHIPYARD
CODE 2370
ENGINEERING DIVISION

NO DEVIATIONS SHALL BE MADE
WITHOUT CODE 2370 APPROVAL

Unless otherwise specified, dimensions are in inches.
Decimals:
X.X = ±0.13
X.XX = ±0.025
X.XXX = ±0.0031
X.XXXX = ±0.0005
Fractions = ±1/16 < 36"
Fractions = ±1/8 > 36"
Angles = ±0.5°
Drawing dimensional and geometric tolerances per ASME Y14.5M-1994

DRAWING NO.	FSR	REF #
2301-3711	2370-2192	N/A

TITLE
HULL LEVEL INSERT

SCALE AS SHOWN | **Sheet 7 of 16** | REV. **ORIG**

TITLE: HULL LEVEL INSERT
DWG. NO: 2301-3711
REV: ORIG
SHEET: 7

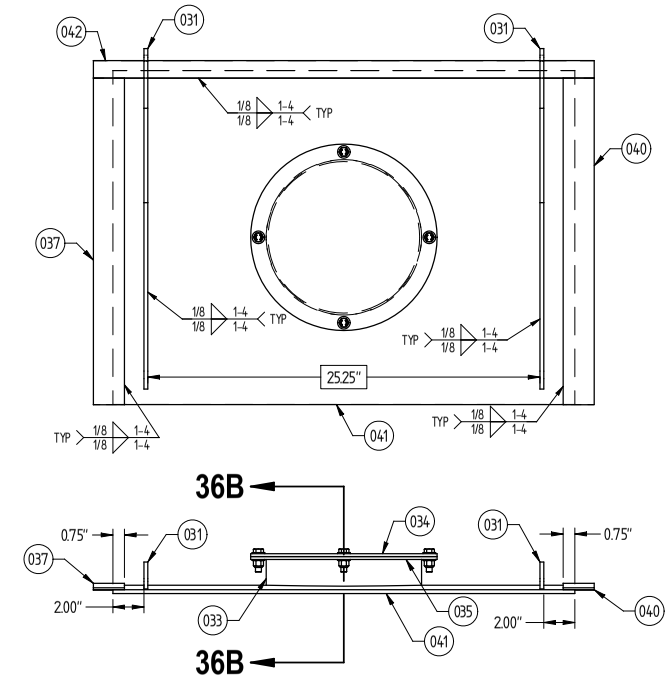

DETAIL VIEW 40C (11B, 14A)
HINGE COVER ASSEMBLY "C"

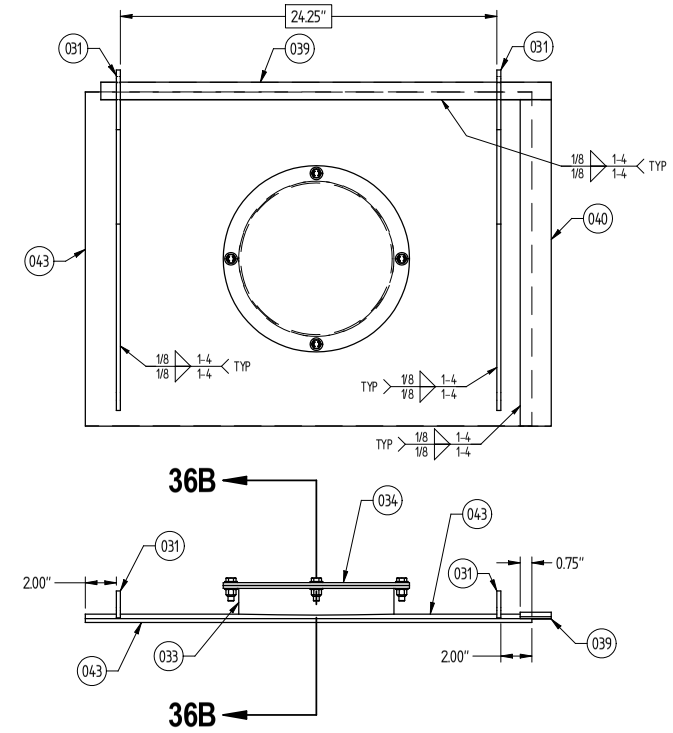

DETAIL VIEW 38C (11B, 14A)
HINGE COVER ASSEMBLY "B"

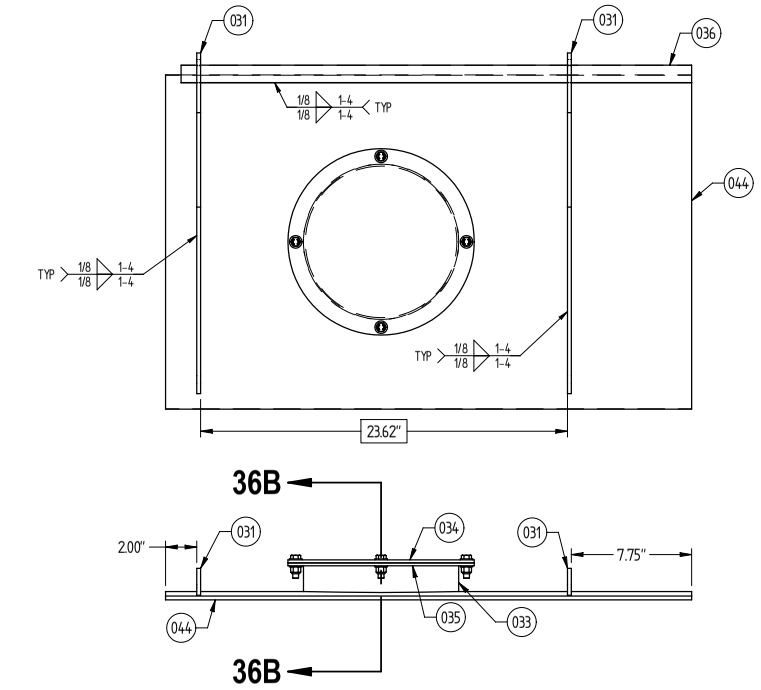

DETAIL VIEW 36C (11B, 14A)
HINGE COVER ASSEMBLY "A"

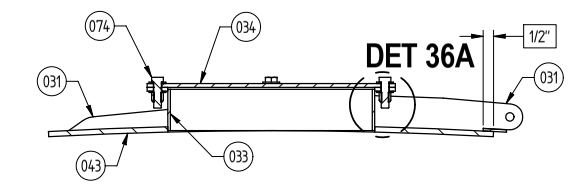

SECTION VIEW 36B (38C)
HINGE COVER PLATE TYPICAL

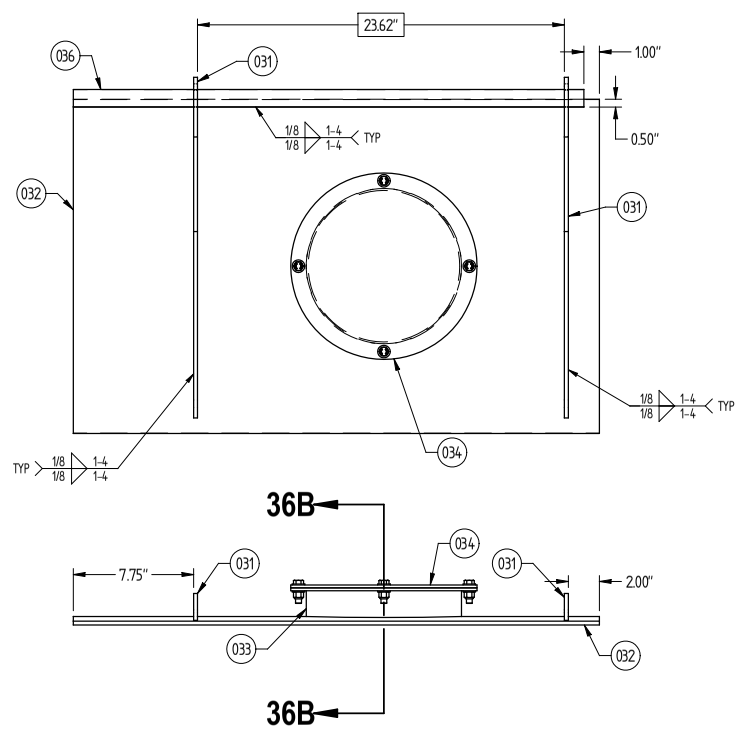

DETAIL VIEW 40A (11B, 14A)
HINGE COVER ASSEMBLY "E"

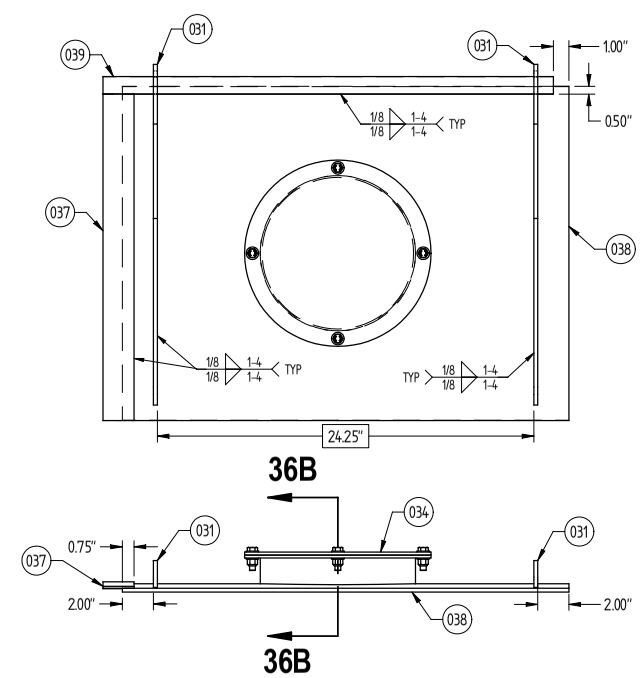

DETAIL VIEW 38A (11B, 14A)
HINGE COVER ASSEMBLY "D"

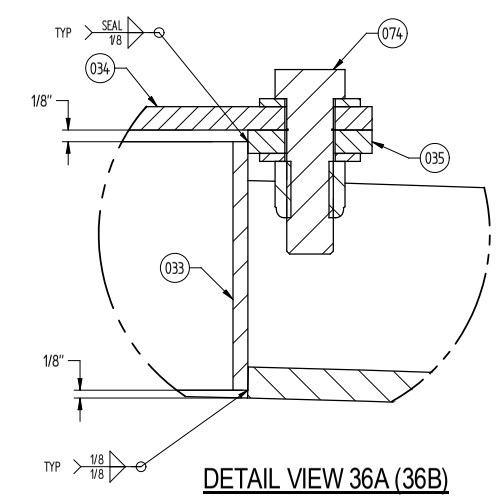

DETAIL VIEW 36A (36B)

PUGET SOUND NAVAL SHIPYARD
CODE 2370
ENGINEERING DIVISION

Unless otherwise specified, dimensions are in inches.
Decimals:
X.X = ±0.13
X.XX = ±0.025
X.XXX = ±0.0031
X.XXXX = ±0.0005
Fractions = ±1/16 < 36"
Fractions = ±1/8 > 36"
Angles = ±0.5°
Drawing dimensional and geometric tolerances per ASME Y14.5M-1994

NO DEVIATIONS SHALL BE MADE
WITHOUT CODE 2370 APPROVAL

DRAWING NO.	FSR	RF #
2301-3711	2370-2192	N/A

TITLE
HULL LEVEL INSERT

SCALE AS SHOWN | **Sheet 8 of 16** | REV. **ORIG**

TITLE: HULL LEVEL INSERT
DWG. NO. 2301-3711
REV. ORIG
SHEET 8

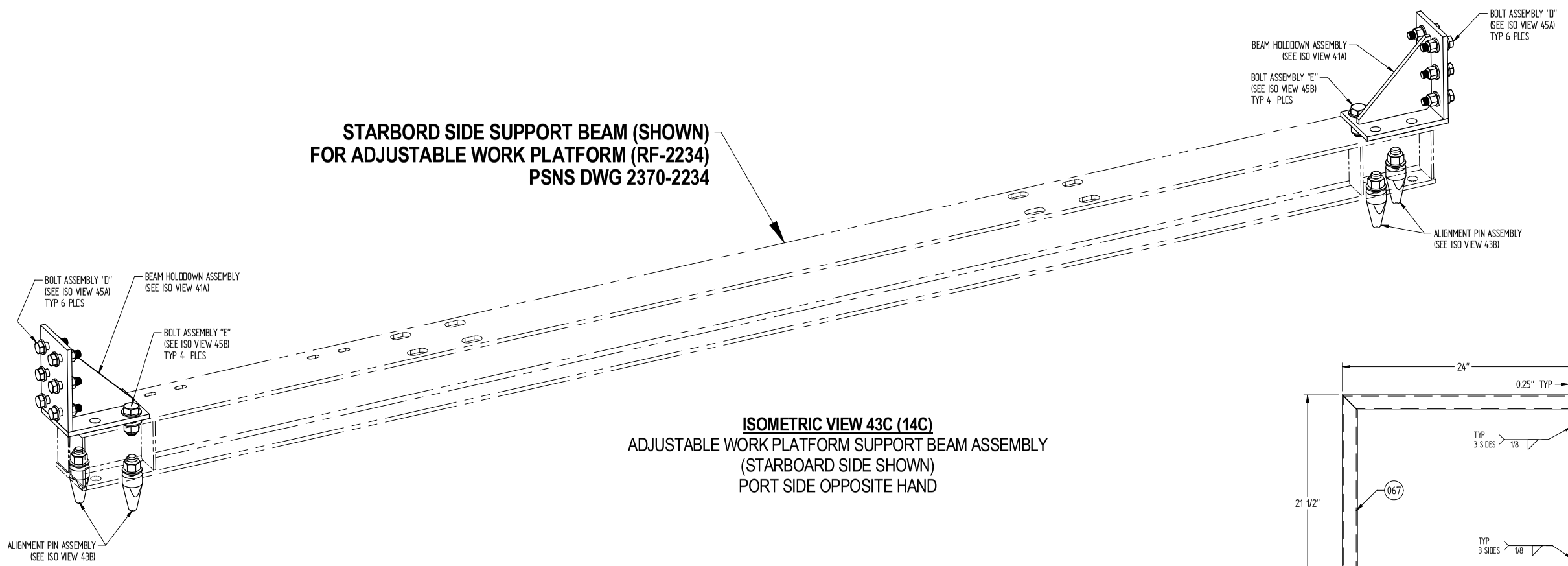

ISOMETRIC VIEW 43C (14C)
ADJUSTABLE WORK PLATFORM SUPPORT BEAM ASSEMBLY
(STARBOARD SIDE SHOWN)
PORT SIDE OPPOSITE HAND

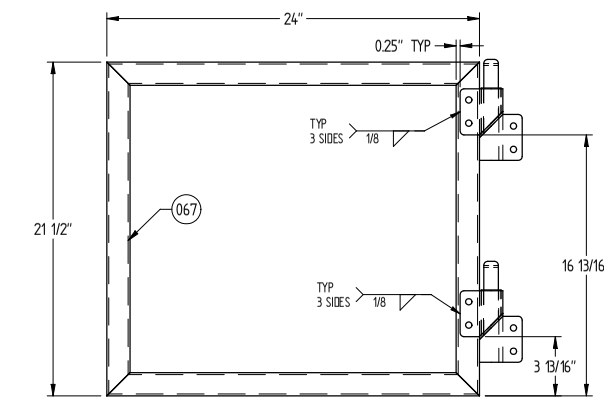

ELEVATION VIEW 41C (11B, 14A)
GRAVIGATE ASSEMBLY

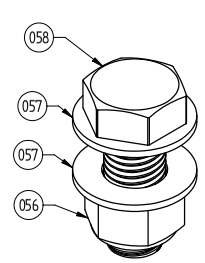

ISOMETRIC VIEW 45B (43C)
BOLT ASSEMBLY "E"

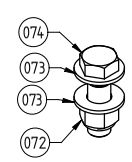

ISOMETRIC VIEW 44B
BOLT ASSEMBLY "C"

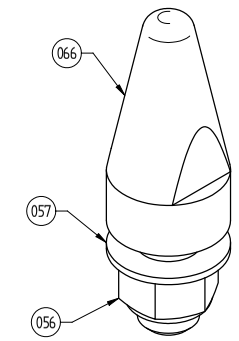

ISOMETRIC VIEW 43B (43C)
ALIGNMENT PIN ASSEMBLY

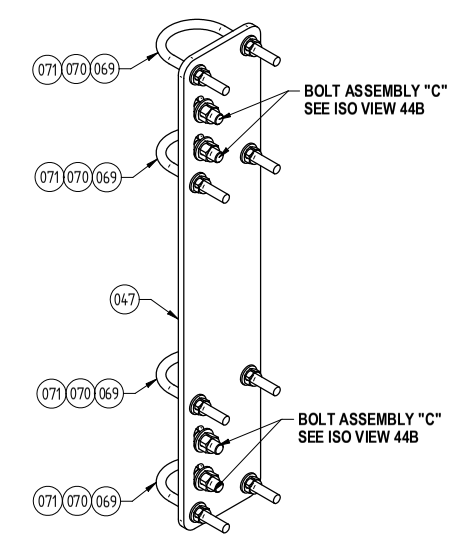

ISOMETRIC VIEW 42A (11B, 14A)
GRAVIGATE MOUNTING ASSEMBLY

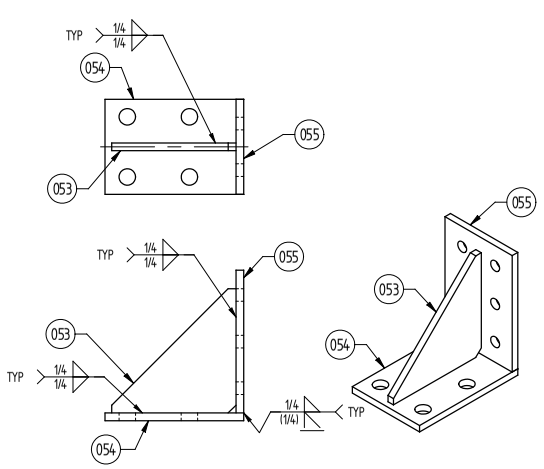

DETAIL VIEW 41A (43C)
BEAM HOLDDOWN ASSEMBLY

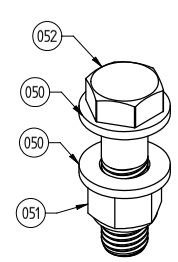

ISOMETRIC VIEW 45A (43C)
BOLT ASSEMBLY "D"

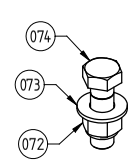

ISOMETRIC VIEW 44A
BOLT ASSEMBLY "B"

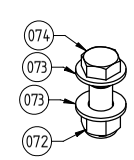

ISOMETRIC VIEW 43A
BOLT ASSEMBLY "A"

PUGET SOUND NAVAL SHIPYARD
CODE 2370
ENGINEERING DIVISION

NO DEVIATIONS SHALL BE MADE
WITHOUT CODE 2370 APPROVAL

Unless otherwise specified, dimensions are in inches.
Decimals:
X.X = ±0.13
X.XX = ±0.025
X.XXX = ±0.0031
X.XXXX = ±0.0005
Fractions = ±1/16 < 36"
Fractions = ±1/8 > 36"
Angles = ±0.5°
Drawing dimensional and geometric tolerances per ASME Y14.5M-1994

DRAWING NO.	FSR	RF #
2301-3711	2370-2192	N/A

TITLE
HULL LEVEL INSERT

SCALE AS SHOWN | **Sheet 9 of 16** | REV **ORIG**

SHEET 9 | REV. ORIG | TITLE HULL LEVEL INSERT | DWG. NO. 2301-3711

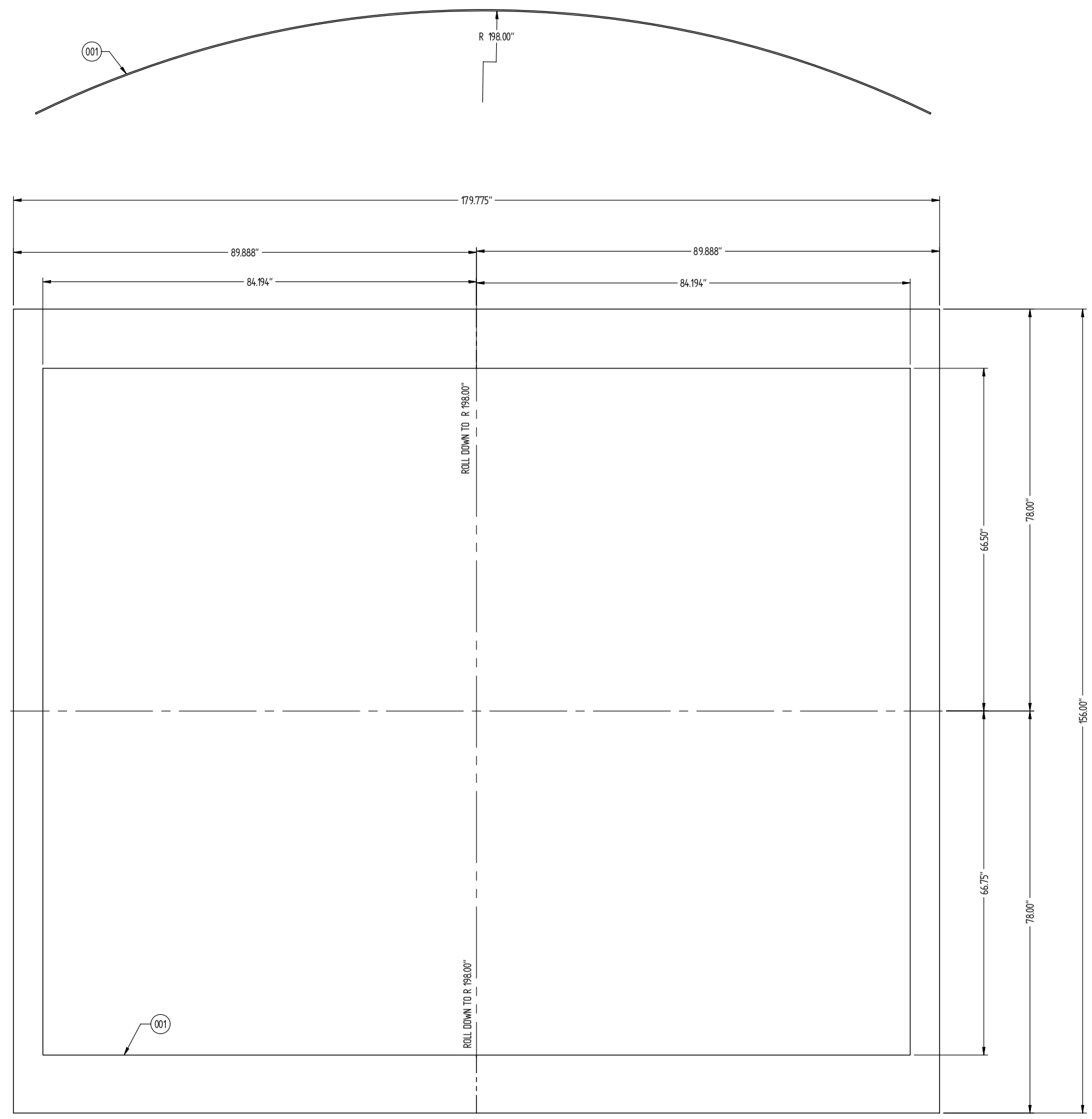

PLAN VIEW 48A
FLAT PATTERN AND FORMED - PC 001

PUGET SOUND NAVAL SHIPYARD
CODE 2370
ENGINEERING DIVISION

Unless otherwise specified, dimensions are in inches.

Decimals:
X.X = ±0.13
X.XX = ±0.025
X.XXX = ±0.0031
X.XXXX = ±0.0005
Fractions = ±1/16 < 36"
Fractions = ±1/8 > 36"
Angles = ±0.5°

Drawing dimensional and geometric tolerances per ASME Y14.5M-1994

NO DEVIATIONS SHALL BE MADE WITHOUT CODE 2370 APPROVAL

DRAWING NO.	FSR	RF #
2301-3711	2370-2192	N/A

TITLE
HULL LEVEL INSERT

SCALE		REV
AS SHOWN	Sheet 10 of 16	ORIG

TITLE: HULL LEVEL INSERT
DWG. NO. 2301-3711
REV: ORIG
SHEET 10

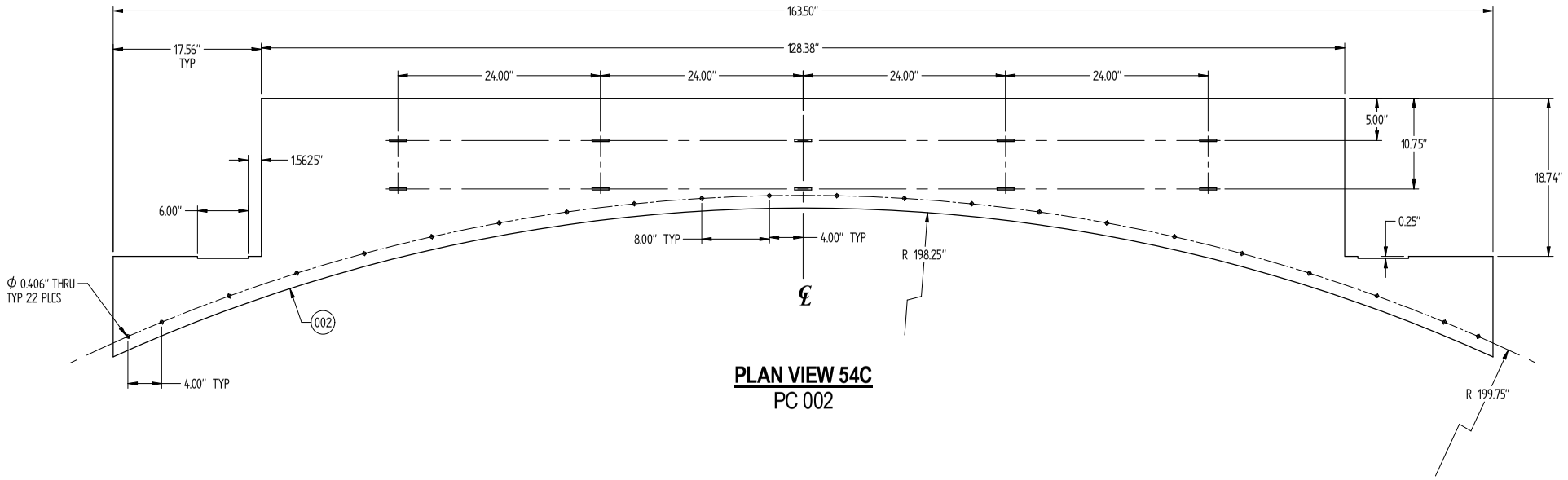

PLAN VIEW 54C
PC 002

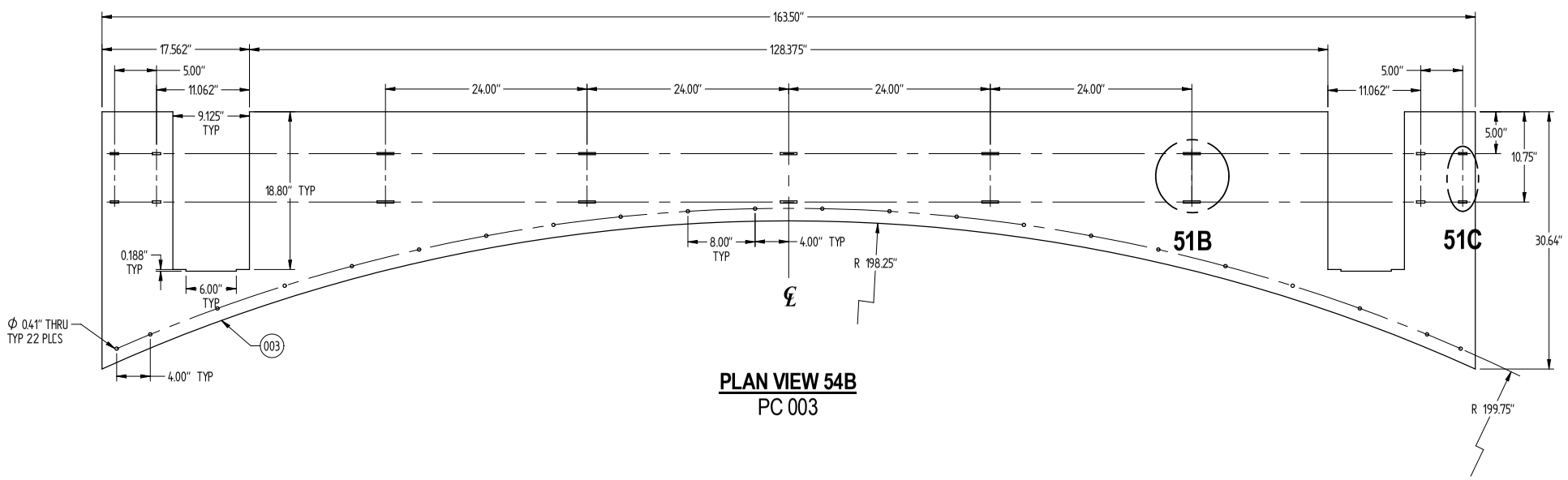

PLAN VIEW 54B
PC 003

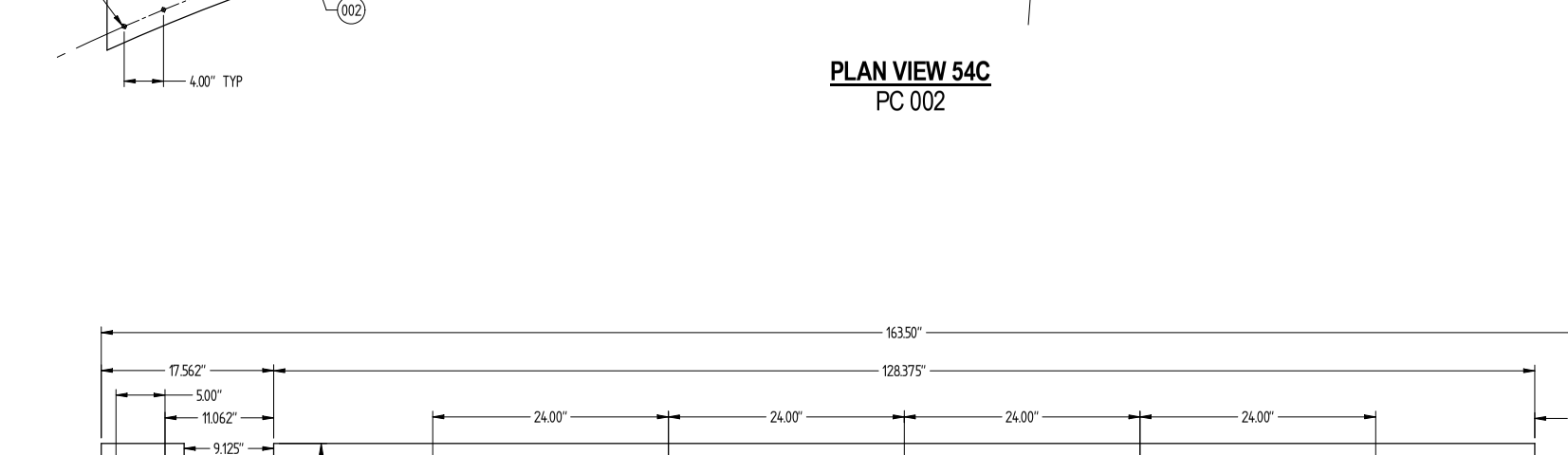

PLAN VIEW 54A
PC 004 SHOWN
PC 007 OPPOSITE HAND

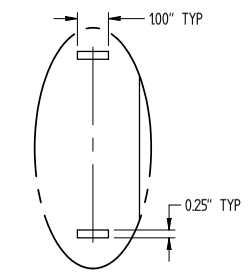

DETAIL VIEW 51C (54B)
SLOT DETAIL TYPICAL

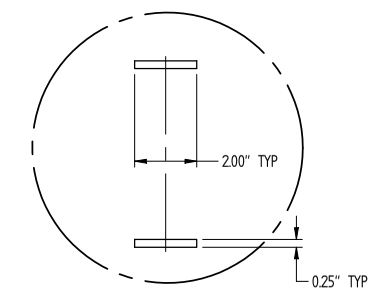

DETAIL VIEW 51B (54B)
SLOT DETAIL TYPICAL

PUGET SOUND NAVAL SHIPYARD
CODE 2370
ENGINEERING DIVISION

Unless otherwise specified, dimensions are in inches.

Decimals:
X.X = ±0.13
X.XX = ±0.025
X.XXX = ±0.0031
X.XXXX = ±0.0005
Fractions = ±1/16 < 36"
Fractions = ±1/8 > 36"
Angles = ±0.5°
Drawing dimensional and geometric tolerances per ASME Y14.5M-1994

NO DEVIATIONS SHALL BE MADE WITHOUT CODE 2370 APPROVAL

DRAWING NO.	FSR	RF#
2301-3711	2370-2192	N/A

TITLE
HULL LEVEL INSERT

SCALE		REV
AS SHOWN	Sheet 11 of 16	ORIG

SHEET 11 | REV ORIG | TITLE HULL LEVEL INSERT | DWG. NO. 2301-3711

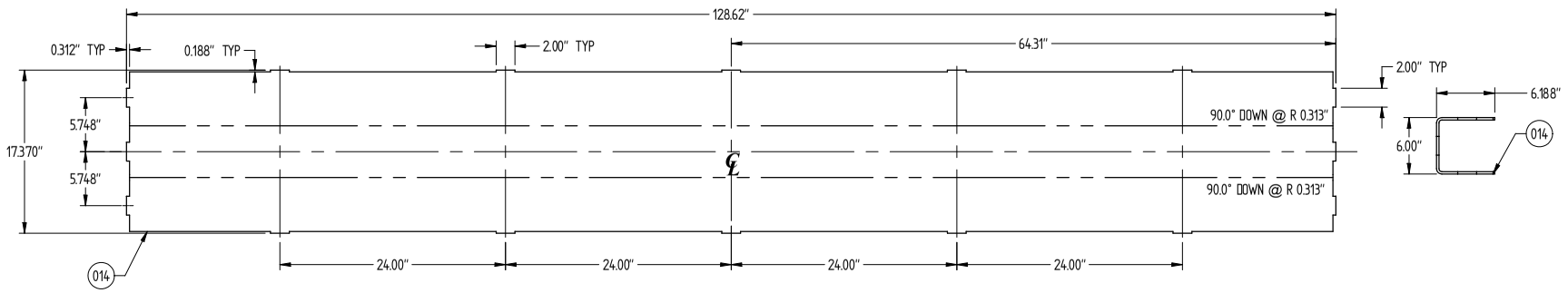

PLAN VIEW 59D
FLAT PATTERN AND FORMED - PC 014

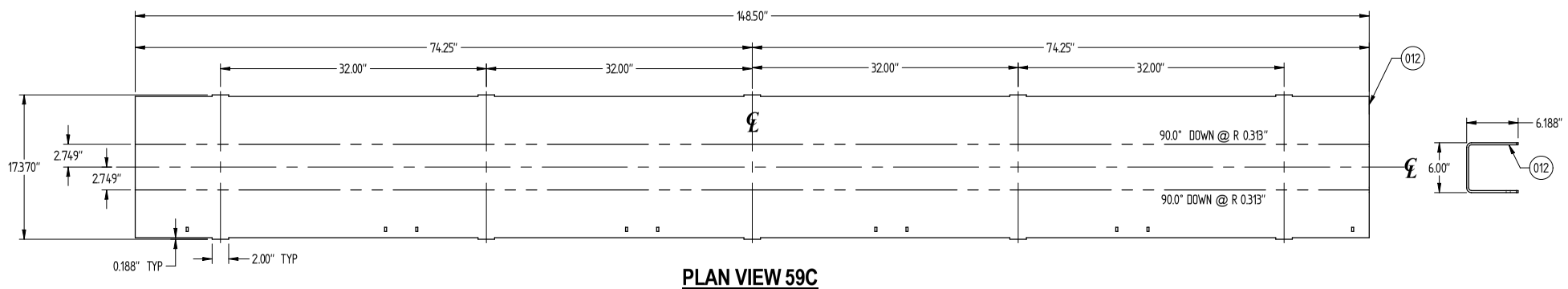

PLAN VIEW 59C
FLAT PATTERN AND FORMED - PC 012

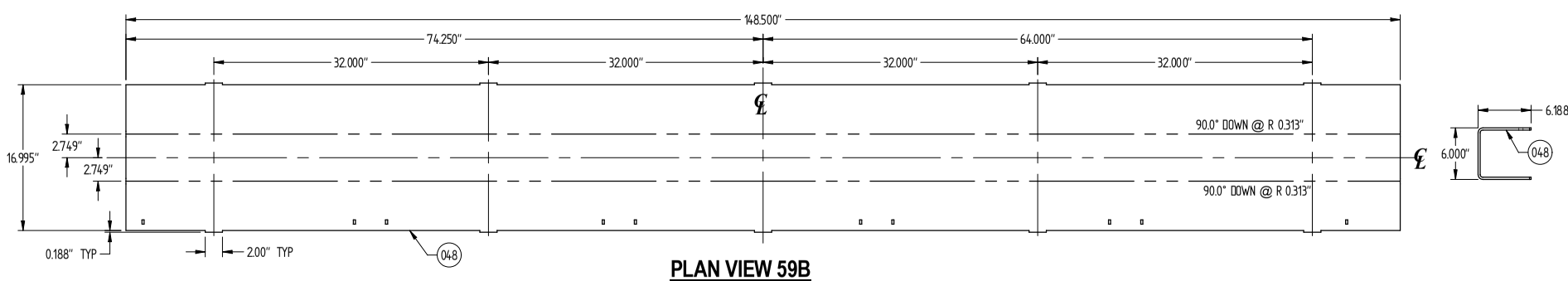

PLAN VIEW 59B
FLAT PATTERN AND FORMED - PC 048

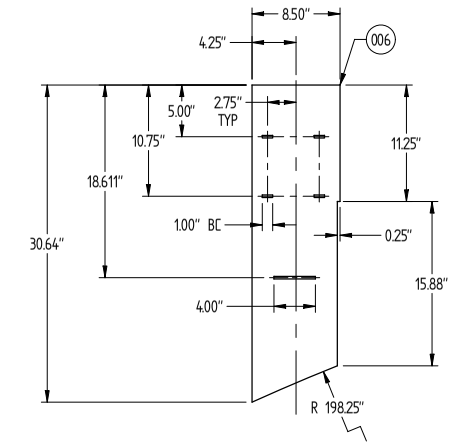

PLAN VIEW 56D
PC 006 SHOWN
PC 011 OPPOSITE HAND

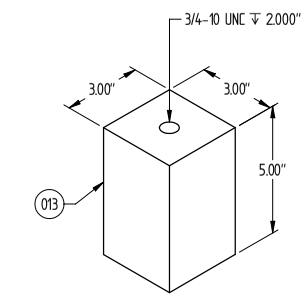

ISOMETRIC VIEW 56C
HOIST RING BLOCK - PC 013

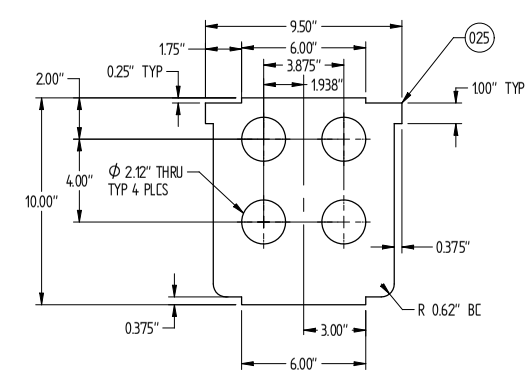

PLAN VIEW 56B
PC 025

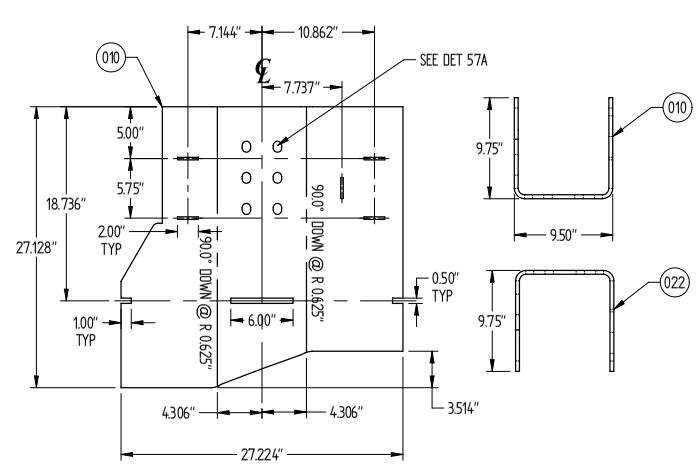

PLAN VIEW 60A
FLAT PATTERN AND FORMED - PC 010 & PC 022
BEND PC 022 OPPOSITE HAND

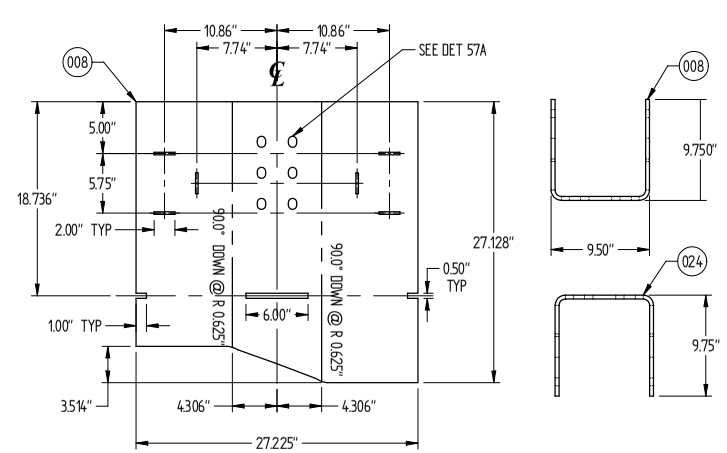

PLAN VIEW 58A
FLAT PATTERN AND FORMED - PC 008 & PC 024
BEND PC 024 OPPOSITE HAND

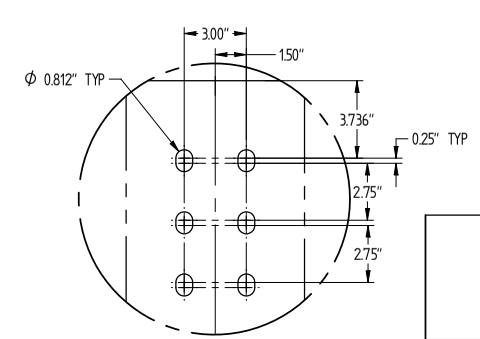

DETAIL VIEW 57A (58A, 60A)
SLOT DETAIL (TYPICAL)

PUGET SOUND NAVAL SHIPYARD
CODE 2370
ENGINEERING DIVISION

NO DEVIATIONS SHALL BE MADE
WITHOUT CODE 2370 APPROVAL

Unless otherwise specified, dimensions are in inches.
Decimals:
X.X = ±0.13
X.XX = ±0.025
X.XXX = ±0.0031
X.XXXX = ±0.0005
Fractions = ± 1/16 < 36"
Fractions = ± 1/8 > 36"
Angles = ±0.5°
Drawing dimensional and geometric tolerances per ASME Y14.5M-1994

DRAWING NO.	FSR	RF #
2301-3711	2370-2192	N/A

TITLE
HULL LEVEL INSERT

SCALE: AS SHOWN | **Sheet 12 of 16** | REV: **ORIG**

REV: ORIG | SHEET: 12
TITLE: HULL LEVEL INSERT
DWG. NO: 2301-3711

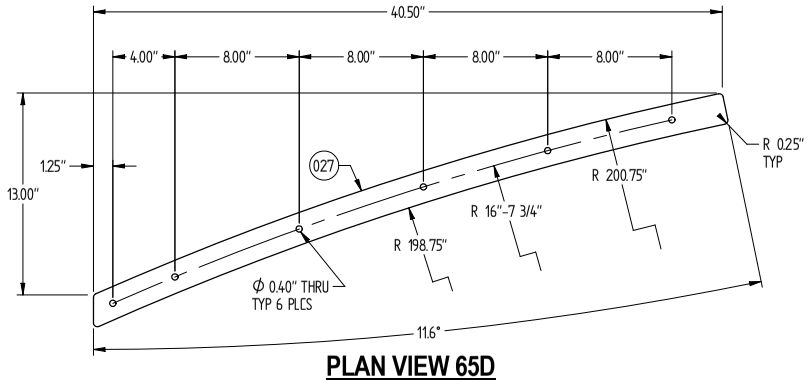

PLAN VIEW 65D
PC 027

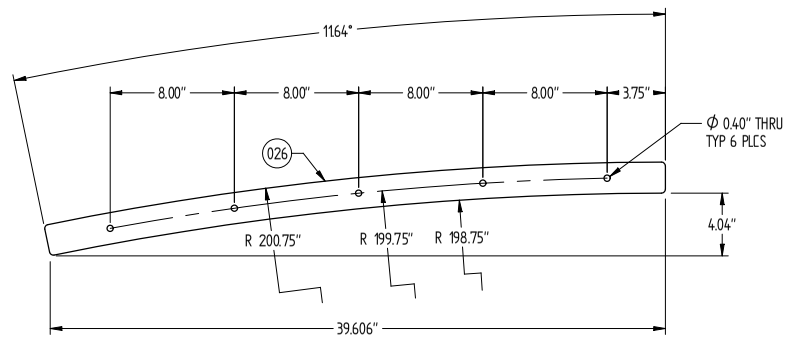

PLAN VIEW 65C
PC 026

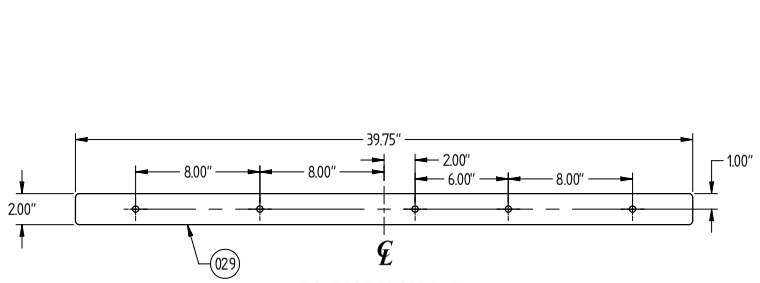

PLAN VIEW 65B
PC 029

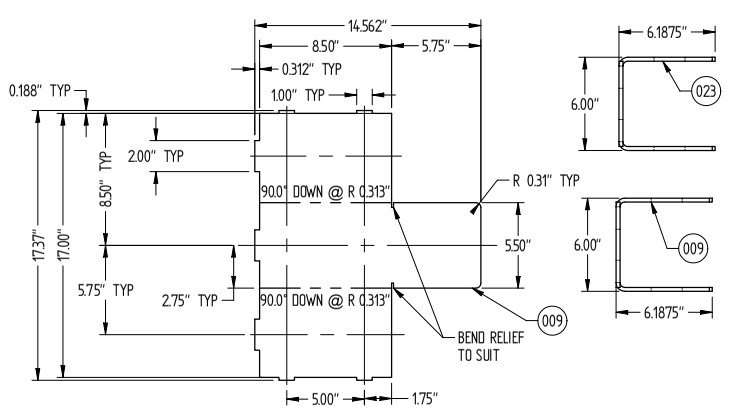

PLAN VIEW 65A
FLAT PATTERN AND FORMED - PC 009 & PC 023

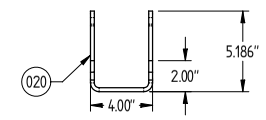

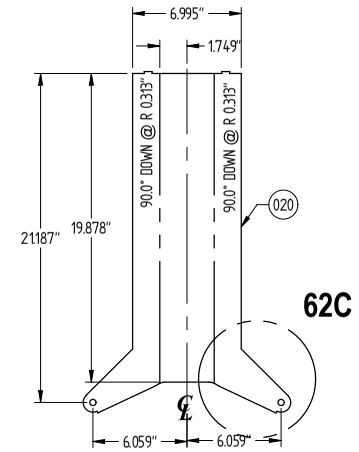

PLAN VIEW 63D
FLAT PATTERN AND FORMED - PC 020

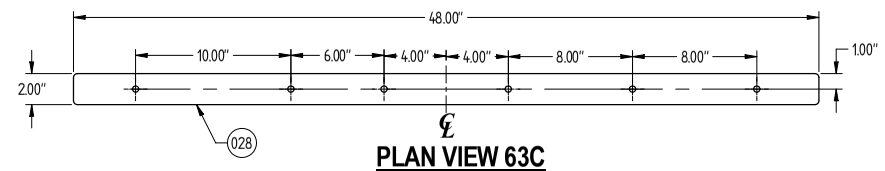

PLAN VIEW 63C
PC 028

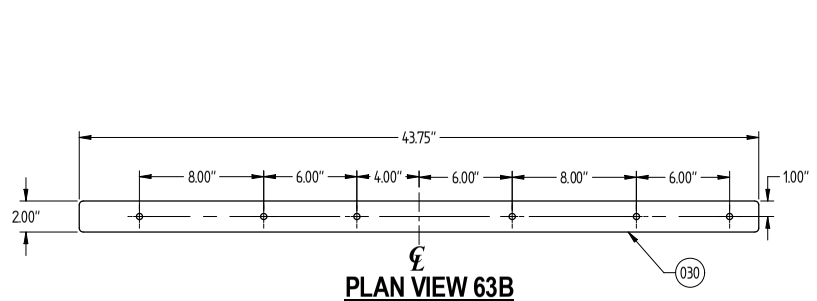

PLAN VIEW 63B
PC 030

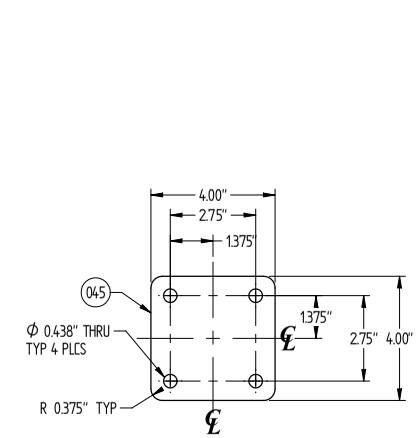

PLAN VIEW 62A
PC 045

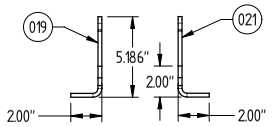

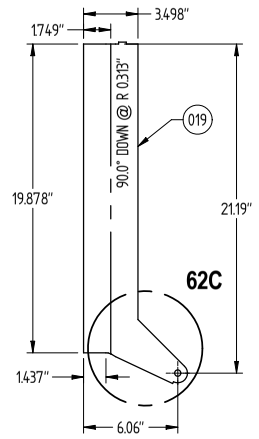

PLAN VIEW 62D
FLAT PATTERN AND FORMED - PC 019 & PC 021
BEND PC 021 OPPOSITE HAND

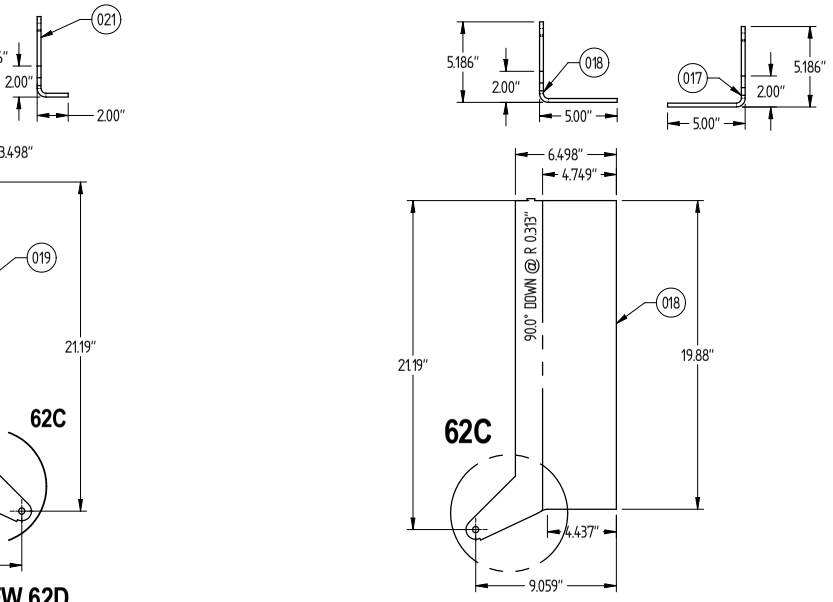

PLAN VIEW 61D
FLAT PATTERN AND FORMED - PC 018 & PC 017
BEND PC 017 OPPOSITE HAND

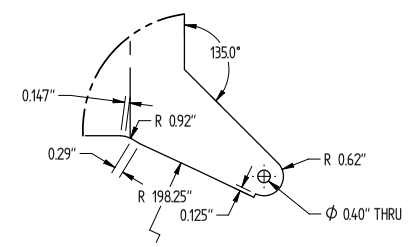

DETAIL VIEW 62C (61D,62D,63D)
TYPICAL HINGE

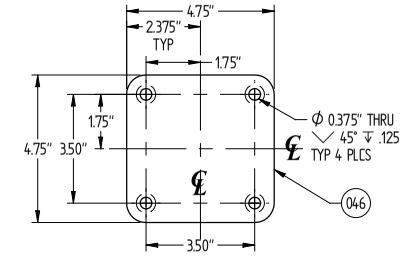

PLAN VIEW 61B
PC 046

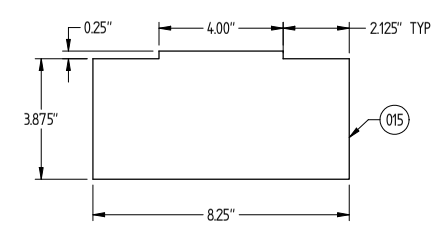

PLAN VIEW 61A
PC 015

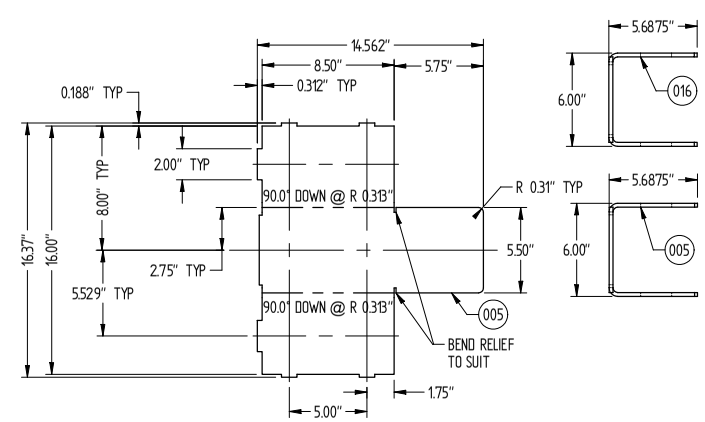

PLAN VIEW 63A
FLAT PATTERN AND FORMED - PC 005 & PC 016

PUGET SOUND NAVAL SHIPYARD
CODE 2370
ENGINEERING DIVISION

NO DEVIATIONS SHALL BE MADE
WITHOUT CODE 2370 APPROVAL

Unless otherwise specified, dimensions are in inches.
Decimals:
X.X = ±0.13
X.XX = ±0.025
X.XXX = ±0.0031
X.XXXX = ±0.0005
Fractions = ±1/16 < 36"
Fractions = ±1/8 > 36"
Angles = ±0.5°
Drawing dimensional and geometric tolerances per ASME Y14.5M-1994

DRAWING NO.	FSR	RF #
2301-3711	2370-2192	N/A

TITLE
HULL LEVEL INSERT

SCALE AS SHOWN | **Sheet 13 of 16** | REV **ORIG**

DWG NO. 2301-3711 | TITLE HULL LEVEL INSERT | REV ORIG | SHEET 13

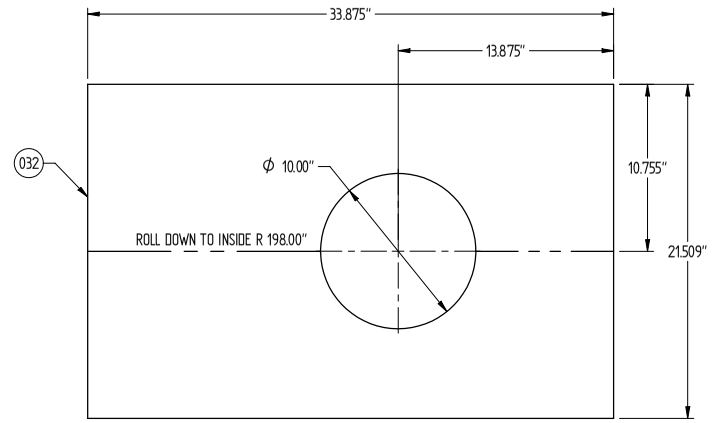

PLAN VIEW 70D
FLAT PATTERN - PC 032

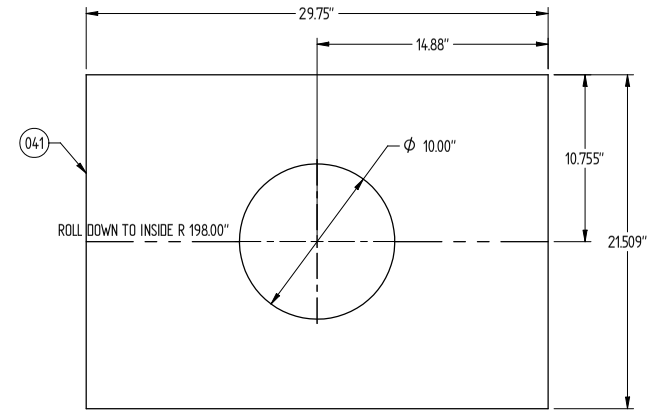

PLAN VIEW 68D
FLAT PATTERN - PC 041

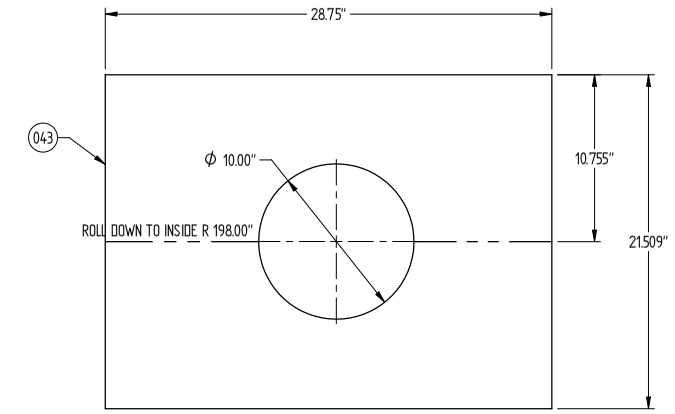

PLAN VIEW 66D
FLAT PATTERN - PC 043

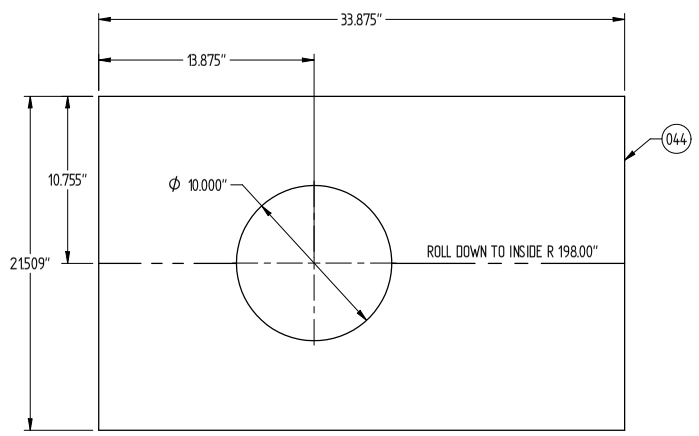

PLAN VIEW 70C
FLAT PATTERN - PC 044

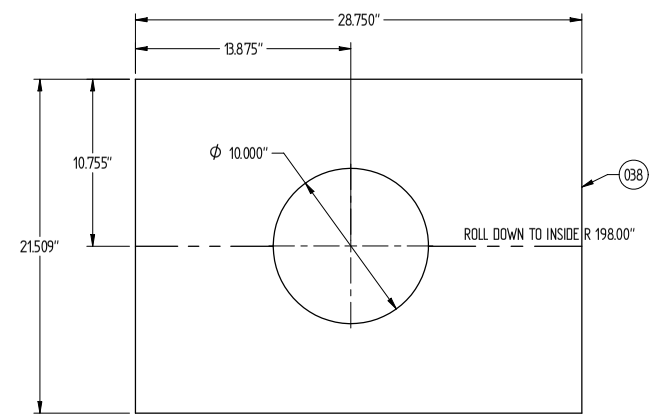

PLAN VIEW 68C
FLAT PATTERN - PC 038

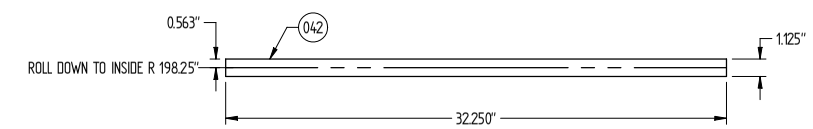

PLAN VIEW 66C
FLAT PATTERN - PC 042

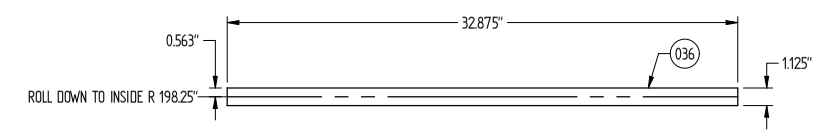

PLAN VIEW 66B
FLAT PATTERN - PC 036

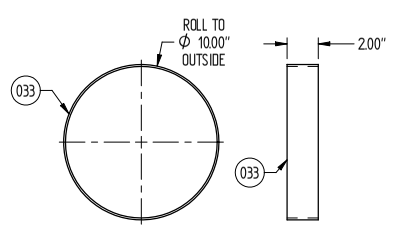

PLAN VIEW 70B
PC 033

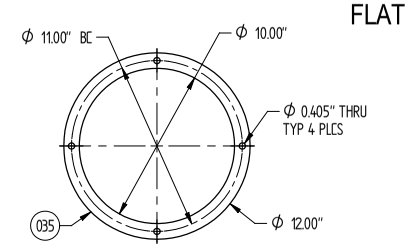

PLAN VIEW 69B
PC 035

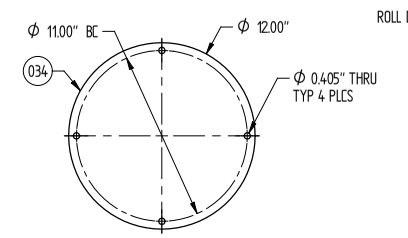

PLAN VIEW 67B
PC 034

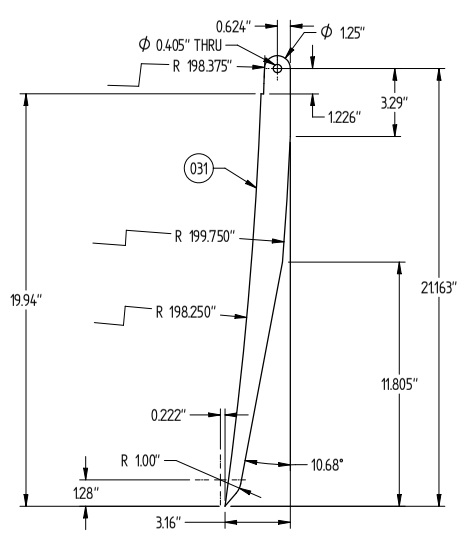

PLAN VIEW 69A
PC 031

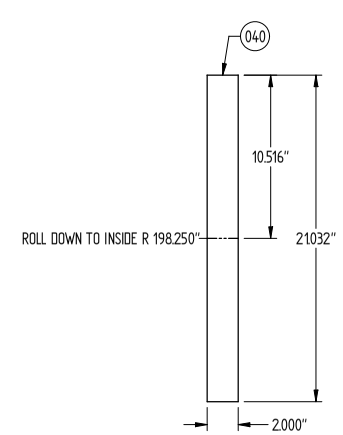

PLAN VIEW 68A
FLAT PATTERN - PC 040

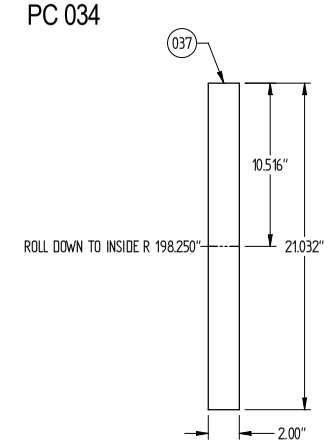

PLAN VIEW 67A
FLAT PATTERN - PC 037

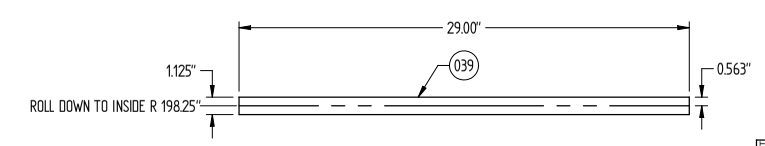

PLAN VIEW 66A
FLAT PATTERN - PC 039

PUGET SOUND NAVAL SHIPYARD
CODE 2370
ENGINEERING DIVISION

NO DEVIATIONS SHALL BE MADE
WITHOUT CODE 2370 APPROVAL

Unless otherwise specified, dimensions are in inches.
Decimals:
X.X = ±0.13
X.XX = ±0.025
X.XXX = ±0.0031
X.XXXX = ±0.0005
Fractions = ±1/16 < 36"
Fractions = ±1/8 > 36"
Angles = ±0.5°
Drawing dimensional and geometric tolerances per ASME Y14.5M-1994

DRAWING NO.	FSR	RF #
2301-3711	2370-2192	N/A

TITLE
HULL LEVEL INSERT

SCALE AS SHOWN | **Sheet 14 of 16** | REV **ORIG**

DWG NO 2301-3711 | TITLE HULL LEVEL INSERT | REV ORIG | SHEET 14

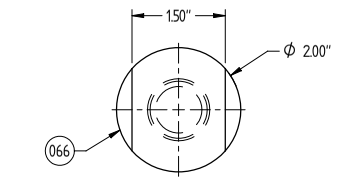

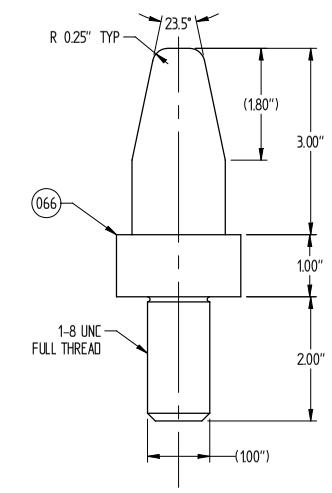

PLAN VIEW 71A
ALIGNMENT PIN - PC 066

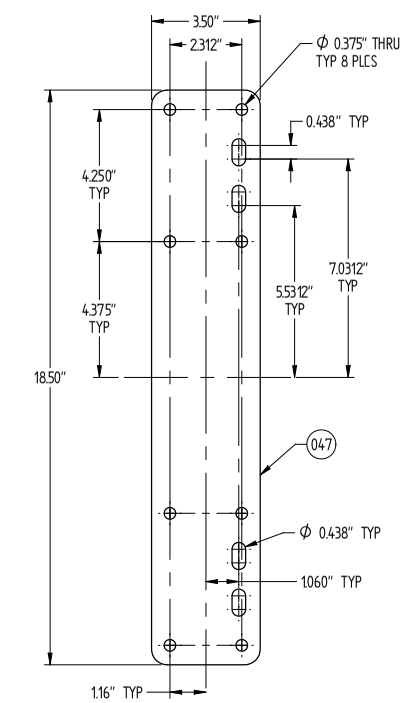

PLAN VIEW 71A
PC 047

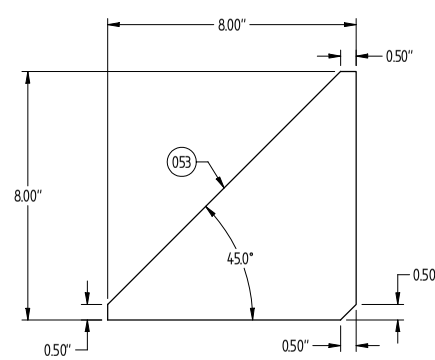

PLAN VIEW 74A
PC 053

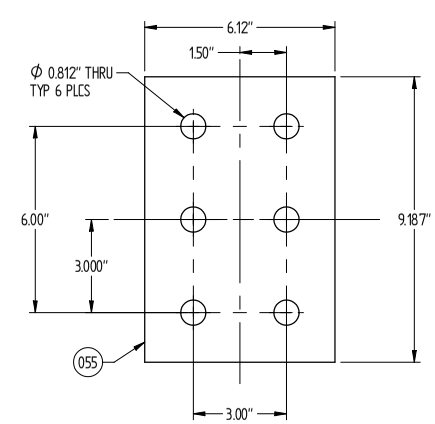

PLAN VIEW 73A
PC 055

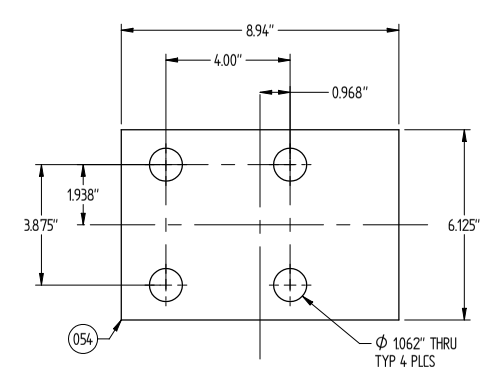

PLAN VIEW 72A
PC 054

PUGET SOUND NAVAL SHIPYARD
CODE 2370
ENGINEERING DIVISION

Unless otherwise specified, dimensions are in inches.
Decimals:
X.X = ±0.13
X.XX = ±0.025
X.XXX = ±0.0031
X.XXXX = ±0.0005
Fractions = ±1/16 < 36"
Fractions = ±1/8 > 36"
Angles = ±0.5°
Drawing dimensional and geometric tolerances per: ASME Y14.5M-1994

NO DEVIATIONS SHALL BE MADE
WITHOUT CODE 2370 APPROVAL

DRAWING NO.	FSR	RF #
2301-3711	2370-2192	N/A

TITLE
HULL LEVEL INSERT

SCALE		REV
AS SHOWN	Sheet 15 of 16	ORIG

REV ORIG SHEET 15
TITLE HULL LEVEL INSERT
DWG. NO. 2301-3711

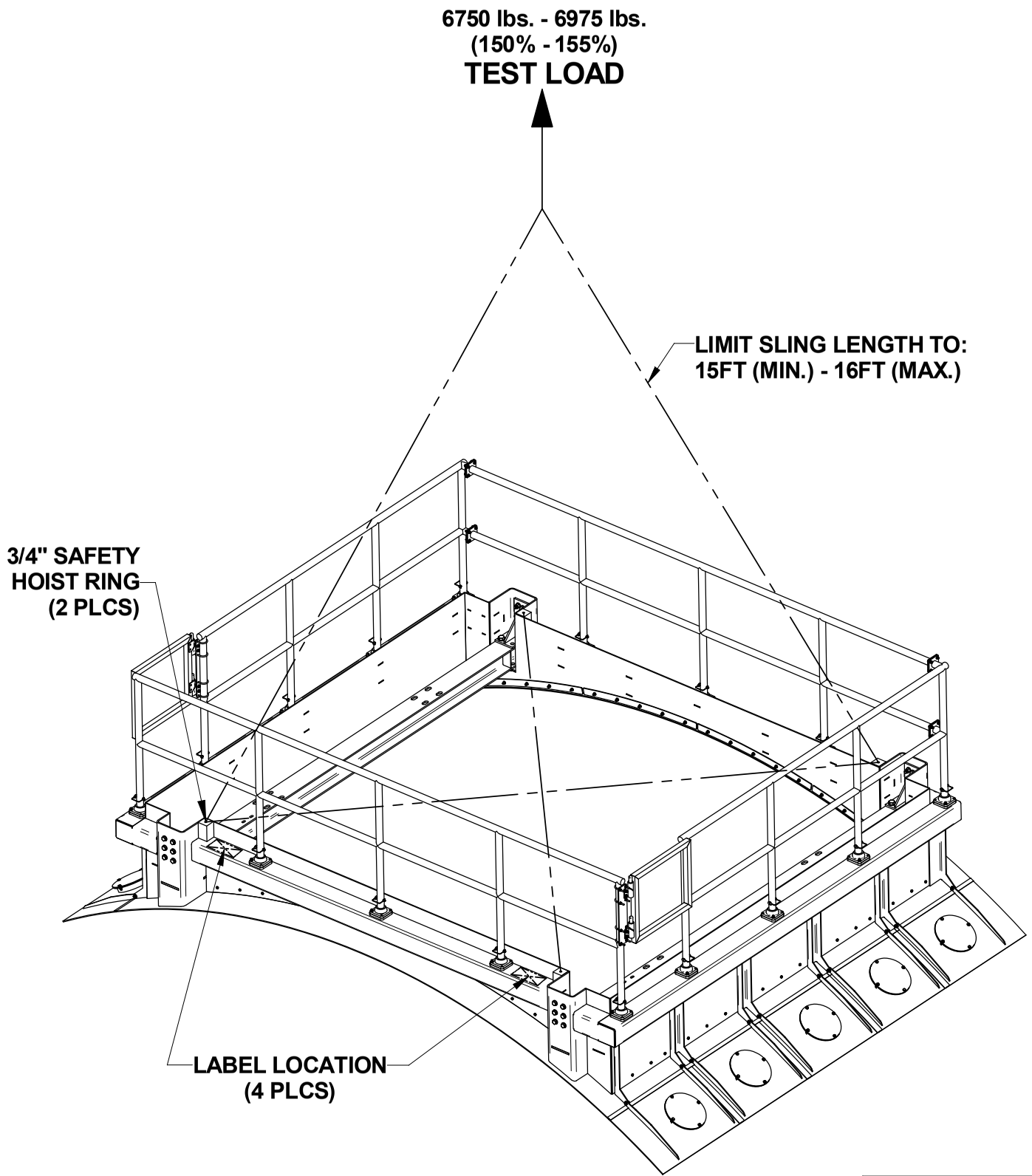

DETAIL VIEW 79B
LOAD TEST
CONFIGURATION

HULL LEVEL INSERT
DWG 2301-3711, RFC-1507
MIN. SLING LENGTH = 15 FT
SPS CAP. (EACH LIFT POINT) = 2600 LBS.
NDT TEST DUE DATE = N/A, SF > 10:1

DETAIL VIEW 78A
LABEL

LOAD TESTING AND NDT FOR HULL LEVEL INSERT:

1. **DOCUMENTATION:** CONTRACTOR SHALL PERFORM AND PROVIDE WRITTEN DOCUMENTATION TO PSNS & IMF THAT THE LIQUID PENETRANT (PT) INSPECTIONS AND LOAD TEST(S) AND WEIGHT MEASUREMENTS REQUIRED BY THIS DRAWING HAVE BEEN SATISFACTORILY PERFORMED. ENSURE DOCUMENTATION CLEARLY SPECIFIES PERFORMANCE OF "PRE" AND "POST" LOAD NDT'S, METHOD USED (NAVSEA T9074-AS-GIB-010/271 REQUIRED), ACCEPTANCE CRITERIA USED (MIL-STD-2035 REQUIRED), AND ITEMS (PIECES AND WELDS) THAT WERE INSPECTED.

2. **PRIOR TO PERFOMING PROOF TEST:**

   a. ENSURE WELDS SECURING LIFT BLOCKS (PC 13) ARE PROPERLY SIZED AND INSTALLED IN ACCORDANCE WITH THE SPECIFICATIONS OF THIS DRAWING.

   b. PERFORM LIQUID PENETRANT TESTS (PT) PER REFERENCE 5 (PSNS DWG 2301-3411) OF ALL ACCESSIBLE SURFACES OF EACH LIFT BLOCK (PC 13) AND THE ATTACHMENT WELDS THAT SECURE EACH LIFT BLOCK (PC 13).

3. **PERFORM 150% PROOF TESTS AS FOLLOWS:**

   THE HULL LEVEL INSERT WHEN FULLY ASSEMBLED, WITH HANDRAILS INSTALLED, IS ESTIMATED TO WEIGH APPROXIMATELY 3,470 LBS. DURING USE AT PSNS, TWO BEAMS WILL BE ADDED TO THE HULL LEVEL INSERT STRUCTURE, EACH WILL WEIGH APPROXIMATELY 315 LBS. THERE WILL ALSO BE AN ADDITIONAL WEIGHT ADDED OF ~ 200 LBS. ANOTHER 200 LBS WILL BE ADDED AS A DESIGN MARGIN (5%). THIS WILL RESULT IN A TOTAL WEIGHT OF 4,500 LBS, AND THEREFORE THE LOAD TEST WILL BE BASED ON 150% TO 155% OF THIS TOTAL WEIGHT. TWO LOAD TESTS WILL BE PERFORMED: FIRST, LOAD TEST TWO LIFT BLOCKS THAT ARE DIAMETRICALLY OPPOSED, THEN LOAD TEST THE TWO REMAINING DIAMETRICALLY OPPOSED LIFT BLOCKS (THIS IS BASED ON THE ASSUMPTION THAT TWO LIFT POINTS CARRY THE LOAD DURING A WORST CASE LOADING CONDITION).

   PERFORM LOAD TEST AS FOLLOWS:

   a. CAREFULLY APPLY UNIFORMILY DISTRIBUTED WEIGHTS TO APPLICABLE PLATFORM, OR RESTRAIN THE PLATFORM AS REQUIRED USING CONTRACTOR FURNISHED HARDWARE TO RESIST THE PROOF TEST LOADS SPECIFIED. ENSURE PLATFORM IS RESTRAINED TO RESIST TWISTING EFFECT FROM LOAD TESTING 2 LIFT BLOCKS AT A TIME.

   b. INSTALL 3/4"-10 UNC SIZE SAFETY HOIST RINGS INTO PC 13 AND ATTACH SUITABLE SIZED PENDANTS OR GROMMETS TO APPLY PROOF TEST LOAD AS SHOWN IN TWO DIAGONALLY OPPOSITE LIFT BLOCKS. ENSURE EACH LEG IS EQUAL LENGTH. APPLY THE TORQUE SPECIFIED BY THE HOIST RING MANUFACTURER. DO NOT LUBRICATE THREADED HOIST RING HOLES. REFER TO DETAIL VIEW 79B.

   c. APPLY PROOF TEST LOAD AS SHOWN IN DETAIL VIEW 79B AS SHOWN FOR 10 MINUTES (MIN). ENSURE NO SIGNS OF DAMAGE OR DEFORMATION ARE OBSERVED.

   d. REPEAT PROOF TEST USING THE SAME TEST LOAD AND RIGGING ARRANGMENT FOR THE OTHER TWO REMAINING DIAGONALLY OPPOSITE LIFT BLOCKS.

4. **AFTER PERFOMING PROOF TESTS:**

   a. ENSURE NO SIGNS OF DAMAGE OR DEFORMATION ARE OBSERVED.

   b. RE-PERFORM LIQUID PENETRANT TEST (PT) AND GO/NO-GO INSPECTIONS AS DESCRIBED IN NOTE 2F REFERENCE 5.

5. IF NOT ALREADY PERFORMED, WEIGH THE FULLY ASSEMBLED HULL LEVEL INSERT AND RECORD THE WEIGHT TO AN ACCURACY OF +/- 50 LBS. THE ESTIMATED WEIGHT IS APPROXIMATELY 3,470 LBS. IF TOTAL WEIGHT EXCEEDS 3,470 LBS, CONTACT PSNS CODE 2370.24 FOR EVALUATION.

6. **LABELING REQUIREMENTS:**

   a. ENGRAVE/VIBRATOOL OR PAINT THE FOLLOWING INFORMATION, AS SHOWN IN VIEW 78A, USING 1/4" TALL (MIN.) LETTERS/NUMBERS. THIS LABEL SHALL BE LOCATED NEAR EACH OF THE FOUR LIFT BLOCKS (PC-13), AS SHOWN IN VIEW 79B.

   b. **LABELING OPTION:** THE USE OF VINYL LETTERING IS AUTHORIZED AS AN ALTERNATIVE TO PAINTING THE LABEL. VINYL LETTERING SHALL BE SCOTCHCAL 3M 220 OR EQUIVALENT.

   c. **LABELING OPTION:** THE USE OF SIGNS MADE FROM STAINLESS STEEL AFFIXED TO STRUCTURE WITH 3M DOUBLE-BACK TRIM TAPE IS AUTHORIZED AS AN ALTERNATIVE.

PUGET SOUND NAVAL SHIPYARD
CODE 2370
ENGINEERING DIVISION

NO DEVIATIONS SHALL BE MADE
WITHOUT CODE 2370 APPROVAL

Unless otherwise specified, dimensions are in inches.
Decimals:
X.X = ±0.13
X.XX = ±0.025
X.XXX = ±0.0031
X.XXXX = ±0.0005
Fractions = ±1/16 < 36"
Fractions = ±1/8 > 36"
Angles = ±0.5°
Drawing dimensional and geometric tolerances per ASME Y14.5M-1994

DRAWING NO.	FSR	RF#
2301-3711	2370-2192	N/A

TITLE
HULL LEVEL INSERT

SCALE: AS SHOWN | **Sheet 16 of 16** | REV: **ORIG**

TITLE: HULL LEVEL INSERT
DWG. NO.: 2301-3711
REV: ORIG | SHEET: 16