APPLICATION		REVISIONS			
NEXT ASSY	USED ON	REV	DESCRIPTION	DATE	APPROVED
G525316	ROTHR	C	REVISED AND REDRAWN PER WECO 170584 JHG	91-03-28	MJS
		D	SEE WECO 172911 PJZ	91-07-31	MJS

INTERPRET DRAWING IN ACCORDANCE WITH
DOD-STD-100, ANSI Y14.5M-1982

PART NUMBER: G338993-1

REV STATUS OF SHEETS	REVISION	D	D	D	D	D	D	D								SPECIFICATION CONTROL DRAWING
	SHEET NO.	1	2	3	4	5	6	7								

PC

UNLESS OTHERWISE SPECIFIED
ALL DIMENSIONS ARE IN
☒ INCHES ☐ ~~MILLIMETERS~~
TOL: ANGLES ±
WHOLE NUMBERS ±
1 PLACE DECIMALS ±
2 PLACE DECIMALS ± .03
3 PLACE DECIMALS ± .010

MATERIAL:

CONTR. NO. N00024-88-C-6067
DR. C. LANDRY 86.03.14
CHK. C. LEONARD 86.03.14
APPD P. CRAIG 86.03.14

APPROVED

BY DIRECTION OF

Raytheon

Raytheon Company
Lexington MA 02173

DRAWING TITLE

SPDT VACUUM COAXIAL RELAYS

SIZE	CAGE CODE	DRAWING NO.
A	49956	G338993

SCALE NONE

SHEET 1 OF 7

10-2735 (10/88) FILM PRINTED IN U.S.A. (10/88) R0130

NOTE:

1. DESCRIPTION. THIS DRAWING COVERS THE DETAIL REQUIREMENTS FOR A RELAY, COAXIAL, SPDT VACUUM.

2. REFERENCED DOCUMENTS. UNLESS OTHERWISE SPECIFIED, REFERENCED DOCUMENTS OF THE ISSUE IN EFFECT ON THE DATE OF THE PURCHASE ORDER OR SUBCONTRACT SHALL FORM A PART OF THIS DRAWING TO THE EXTENT SPECIFIED HEREIN. WHENEVER REFERENCED DOCUMENTS CONFLICT WITH THIS DRAWING, THIS DRAWING SHALL GOVERN.

3. REQUIREMENTS

3.1 GENERAL. RELAY(S) SHALL BE IN ACCORDANCE WITH THE REQUIREMENTS OF MIL-S-3928.

3.2 ELECTRICAL. SEE SCHEMATIC, FIGURE 2.

3.2.1 POWER RATING. 90 KW CW AVERAGE, 30 MHz AT 1:1 VSWR. 20 KW CW AVERAGE, 500 MHz AT 1:1 VSWR.

3.2.2 FREQUENCY RANGE. 0 TO 500 MEGAHERTZ.

3.2.3 VSWR. LESS THAN 1.02:1 AT 30 MHz. LESS THAN 1.15:1 AT 500 MHz.

3.2.4 CROSSTALK. GREATER THAN 60 dB ISOLATION AT 30 MHz. GREATER THAN 30 dB ISOLATION AT 500 MHz.

3.2.5 INSERTION LOSS. 0.01 dB MAXIMUM.

3.2.6 COIL RESISTANCE. 4.8 OHMS ±10 PERCENT.

3.2.7 CONTACT CONFIGURATION. SPDT FORM C, BREAK BEFORE MAKE.

3.2.8 ACTUATION. LATCHING INTERMITTENT DUTY WITH AUTO DEENERGIZING AND AUXILIARY MANUAL OPERATION.

3.2.9 ACTUATION VOLTAGE. 26.5 VDC.

3.2.10 OPERATING TIME. 50 MILLISECONDS MAXIMUM.

3.2.11 CHARACTERISTIC IMPEDENCE. 50 OHMS NOMINAL.

3.3 MECHANICAL

3.3.1 DESIGN AND CONSTRUCTION. RELAY(S) SHALL BE IN ACCORDANCE WITH THE REQUIREMENTS OF MIL-S-3928. THE PHYSICAL OUTLINE, DIMENSIONS AND TOLERANCES SHALL BE IN ACCORDANCE WITH FIGURE 1, OUTLINE DRAWING, AND THE TOLERANCE BLOCK, SHEET 1.

3.3.2 MATERIALS. SHALL BE IN ACCORDANCE WITH MIL-S-3928 AND AS FOLLOWS.

3.3.2.1 CONNECTORS. SHALL BE IN ACCORDANCE WITH FIGURE 5, OUTLINE DRAWING.

3.3.2.2 ACTUATOR COIL CONNECTOR. MS RECEPTACLE.

3.3.3 MOUNTING. MOUNTING SHALL BE IN ACCORDANCE WITH FIGURE 1, OUTLINE DRAWING.

3.3.4 WEIGHT. 20 LBS. MAXIMUM.

3.3.5 AUXILIARY CONTACTS. TWO SPDT AUXILIARY CONTACTS.

3.3.5.1 RATING. 115/230 VAC 5 AMPS. 28 VDC 3 AMPS INDUCTIVE (SEA LEVEL). 5 AMPS RESISTIVE.

3.3.5.2 MAXIMUM CONTINUOUS CURRENT THROUGH AUXILIARY CONTACTS 1.5 AMPS.

3.3.6 INPUT OUTPUT LINE SIZE. 3.125 INCHES DIAMETER WITH COAX TYPE SWIVEL FLANGES IN ACCORDANCE WITH EIA STANDARD RS 225.

3.3.7 ACCESSORY FITTINGS. SWITCH TO LINE CONNECTOR, JENNINGS PART 570318 (3 SUPPLIED). SWITCH TO SWITCH CONNECTOR (SPECIAL ORDER).

3.4 ENVIRONMENTAL CONDITIONS. RELAY(S) SHALL MEET THE ENVIRONMENTS SPECIFIED IN MIL-S-3928 WITH THE FOLLOWING MODIFICATIONS AND ADDITIONS.

3.4.1 AMBIENT TEMPERATURE

3.4.1.1 OPERATING. 0 TO 50 DEGREES C.

3.4.1.2 NONOPERATING. -55 TO 85 DEGREES C.

3.4.2 ALTITUDE

3.4.2.1 OPERATING. SEA LEVEL TO 50,000 FEET.

3.4.2.2 NONOPERATING. SEA LEVEL TO 50,000 FEET.

3.4.3 VIBRATION. RELAY SHALL BE SYSTEM TESTED BY RAYTHEON AND THE RELAY SHALL BE CAPABLE OF OPERATING WITHOUT FAILURE WHEN EXPOSED TO VIBRATION TESTS IN ACCORDANCE WITH MIL-STD-167-1, CLASSIFICATION TYPE 1.

3.4.4 SHOCK. 25 G'S (3 PLANES) IN ACCORDANCE WITH MIL-E-4970, PROCEDURE II.

3.4.5 DUST AND SAND. RELAY SHALL MEET THE DUST (FINE SAND) REQUIREMENTS OF MIL-E-16400.

3.4.6 FUNGUS. RELAY SHALL MEET THE FUNGUS REQUIREMENTS OF MIL-E-16400.

3.4.7 SALT SPRAY. SHALL BE IN ACCORDANCE WITH MIL-STD-202, METHOD 101, CONDITIN A (96 HOURS).

3.5 MEAN LIFE. 500,000 CYCLES (1 CYCLE EQUAL 2 SWITCHES).

3.6 MARKING. MARKING SHALL BE IN ACCORDANCE WITH MIL-S-3928. MARKING SHALL BE ELECTRICALLY NONCONDUCTIVE, AND CONFORM TO THE SOLVENCY REQUIREMENTS OF MIL-STD-202, METHOD 215, SOLVENT SOLUTIONS a, b AND c.

3.7 WORKMANSHIP. DEVICES SHALL BE MANUFACTURED AND PROCESSED IN A CAREFUL AND WORKMANLIKE MANNER IN ACCORDANCE WITH GOOD DESIGN AND SOUND PRACTICE AND SHALL BE FREE FROM DEFECTS THAT WILL AFFECT LIFE, SERVICEABILITY, OR APPEARANCE.

4. QUALITY ASSURANCE PROVISIONS. UNLESS OTHERWISE SPECIFIED HEREIN, QUALITY ASSURANCE PROVISIONS SHALL BE IN ACCORDANCE WITH MIL-S-3928, EXCEPT MATERIALS INSPECTION, QUALIFICATION INSPECTION, FIRST ARTICLE INSPECTION, AND GROUP B INSPECTION, ARE NOT REQUIRED.

4.1 QUALITY CONFORMANCE INSPECTION. SHALL BE PERFORMED ON 100 PERCENT OF THE PRODUCT IN ACCORDANCE WITH TABLE IV OF MIL-S-3928 AND IN THE ORDER SHOWN. DISCRETE TEST DATA FOR THE INSPECTION AND TESTS SHALL BE SUPPLIED TO THE PROCURING ACTIVITY FOR THEIR APPROVAL.

4.2 QUALIFICATION INSPECTION. IF REQUIRED BY THE PURCHASE ORDER OR SUBCONTRACT, QUALIFICATION SHALL BE CONDUCTED IN ACCORDANCE WITH MIL-S-3928. EACH OF THESE UNITS SHALL HAVE SATISFACTORILY PASSED THE REQUIREMENTS SPECIFIED IN 4.1, QUALITY CONFORMANCE INSPECTION, PRIOR TO QUALIFICATION INSPECTION.

4.3 MANUFACTURER CHANGES. SUBSEQUENT TO THE MANUFACTURER'S ASSIGNMENT OF A PART NUMBER TO A DEVICE, DEFINED HEREIN, ALL DEVICES SUPPLIED AGAINST THE PART NUMBER SHALL BE IDENTICAL WITH RESPECT TO DESIGN, MATERIALS, FINISHES, CONSTRUCTION, AND MANUFACTURING PROCESSES UNLESS PRIOR WRITTEN AGREEMENT OF THE CHANGE HAS BEEN OBTAINED FROM THE PROCURING ACTIVITY. FAILURE OF A MANUFACTURER TO COMPLY WITH THIS REQUIREMENT SHALL BE SUFFICIENT CAUSE FOR WITHDRAWAL OF APPROVAL OF THE MANUFACTURER FOR THE DEVICE AND FOR REJECTION OF ALL DEVICES AFFECTED BY SUCH CHANGES.

4.4 PROCESS CONTROL. THE MANUFACTURER SHALL MAINTAIN A PROGRAM FOR THE CONTROL OF ALL MANUFACTURING PROCESSES WHICH COULD HAVE AN EFFECT UPON THE QUALITY AND RELIABILITY OF THE END PRODUCT. PROCESS INSPECTION PROCEDURES SHALL BE PREPARED WHENEVER NECESSARY TO SUPPLEMENT PROCESS SPECIFICATIONS.

5. PREPARATION FOR DELIVERY

5.1 GENERAL. PREPARATION FOR DELIVERY SHALL BE IN ACCORDANCE WITH MIL-S-3928 AND AS FOLLOWS.

5.2 PACKAGING. SHALL BE IN ACCORDANCE WITH MIL-S-28786.

6. NOTES. NOT APPLICABLE.

SUGGESTED SOURCE(S) OF SUPPLY:

ITT JENNINGS
CAGE CODE 73905
SAN JOSE, CA 95122
MFR PART NUMBER: RC21A5510F14B

IDENTIFICATION OF THE SUGGESTED SOURCE(S) OF SUPPLY HEREON IS NOT TO BE CONSTRUED AS A GUARANTEE OF PRESENT OR CONTINUED AVAILABILITY AS A SOURCE OF SUPPLY FOR THE ITEM(S).

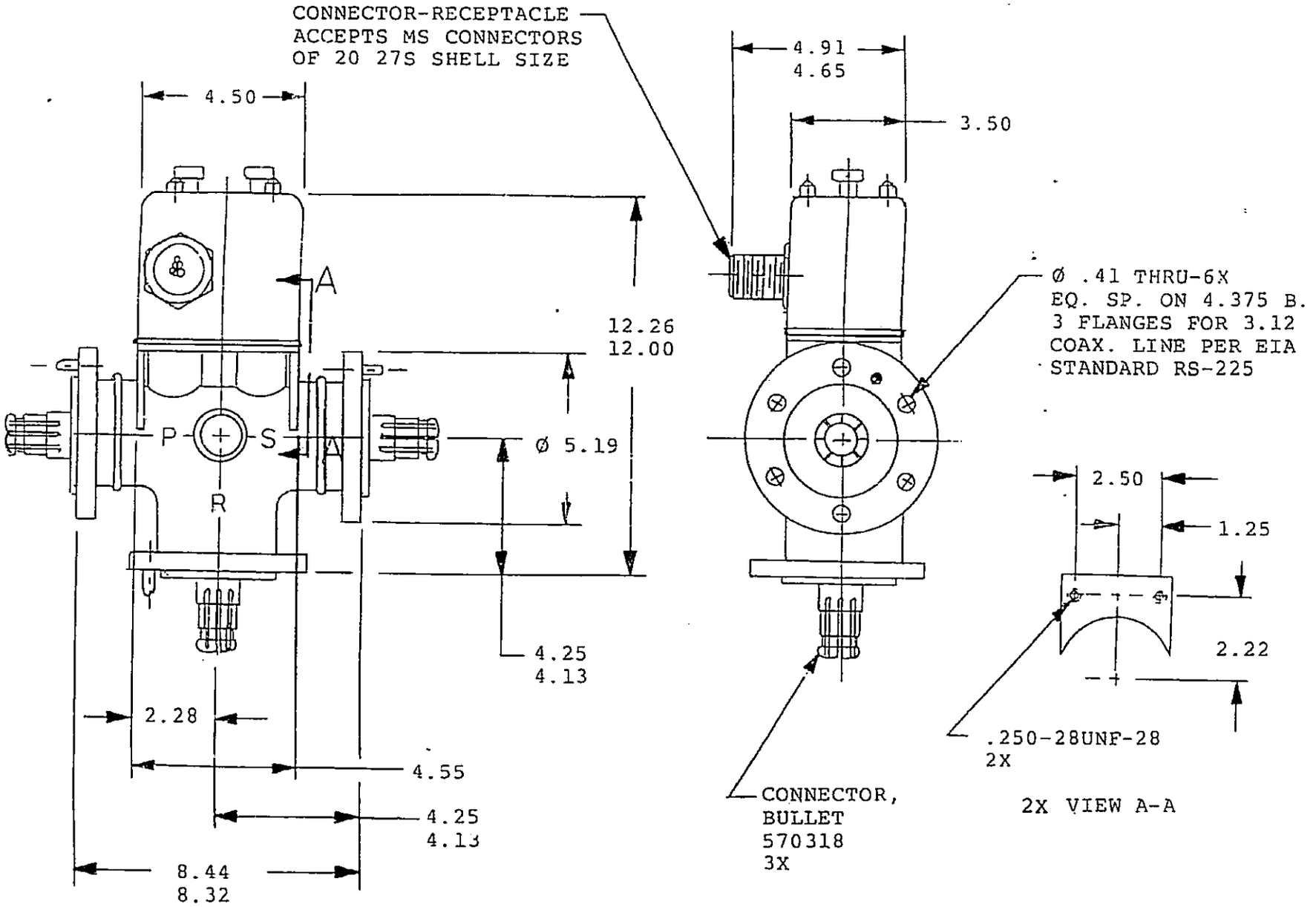

FIGURE 1. OUTLINE DRAWING

RAYTHEON Raytheon Company Lexington MA. 02173	SIZE A	CAGE CODE 49956	DRAWING NO. G338993	REV D
			SHEET 6	

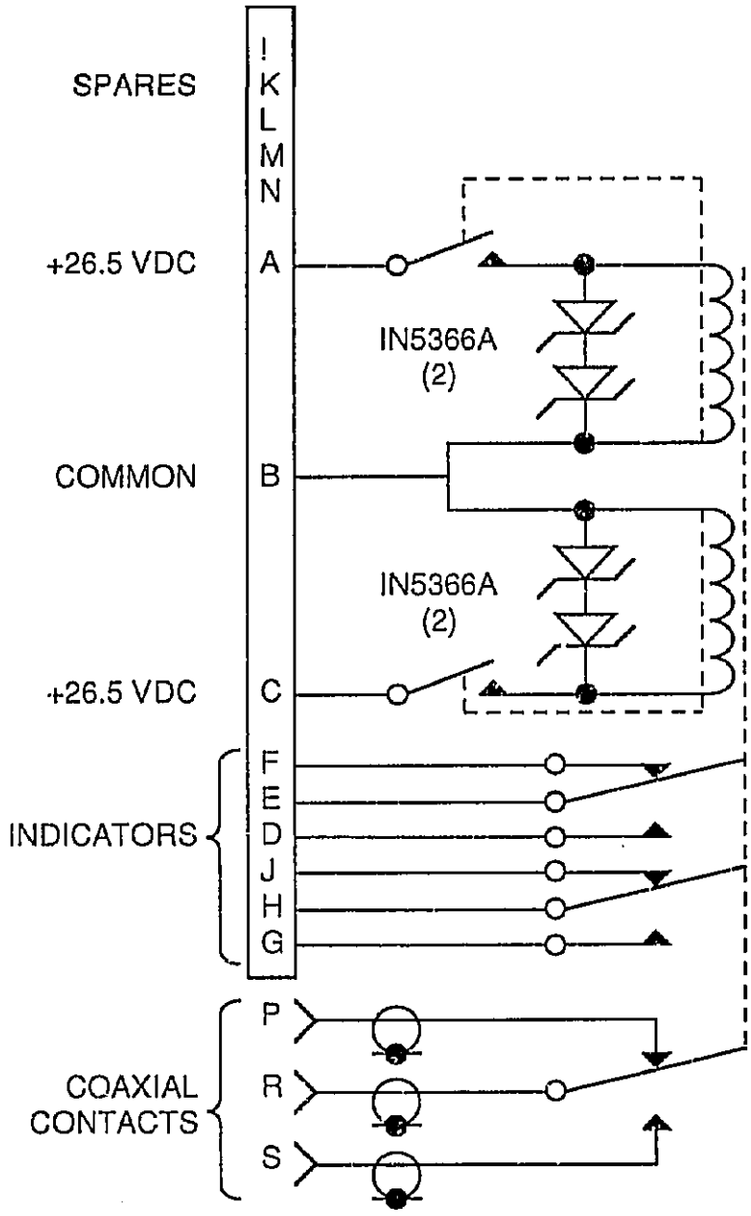

NOTE: APPLY ACTUATING VOLTAGE TO PINS A AND B TO CLOSE CONTACTS P AND R.
APPLY ACTUATING VOLTAGE TO PINS C AND B TO CLOSE CONTACTS S AND R.

FIGURE 2. SCHEMATIC.

Raytheon Raytheon Company Lexington MA. 02173	SIZE A	CAGE CODE 49956	DRAWING NO. G338993	REV D
			SHEET 7	