Section C

SPECIFICATION

For

HYPERBARIC SYSTEMS OVERHAUL

of

DIVING SIMULATION FACILITY 2

of

NAVAL DIVING AND SALVAGE TRAINING CENTER

of

NAVAL SUPPORT ACTIVITY

PANAMA CITY, FL

TABLE OF CONTENTS

SECTION 1: GENERAL PARAGRAPHS

SECTION 2: OPERATION/PERFORMANCE REQUIREMENTS

SECTION 3: PIPING & INSTRUMENTATION (P&I) TECHNICAL REQUIREMENTS

3.1 GENERAL REQUIREMENTS

3.2 SPECIFIC TO CONTRACT

SECTION 4: PRESSURE VESSEL FOR HUMAN OCCUPANCY (PVHO)

4.1 GENERAL REQUIREMENTS

4.2 SPECIFIC TO CONTRACT

SECTION 5: QUALITY ASSURANCE

5.1 GENERAL REQUIREMENTS

5.2 SPECIFIC TO THIS PROJECT

SECTION 6: CONCEPT OF OPERATIONS

NOTE: THE SYMBOL "N/A" BESIDE A PARAGRAPH NUMBER INDICATES THAT NO SPECIFICATION IS INTENDED IN THAT PARAGRAPH.

SECTION 1

1. GENERAL PARAGRAPHS

1.1 GENERAL:

1.1.1 INTENTION: It is the declared and acknowledged intention and meaning to overhaul the hyperbaric systems, as described herein, to be pretested, overhauled, installed, and retested on the Diving Simulation Facility #2 (DSF-2) at the Naval Diving and Salvage Training Center (NDSTC), Naval Support Activity (NSA) Panama City, FL. The contractor shall be responsible for all work specified herein. All Hyperbaric Facilities and system components shall be complete and 100 percent operational with regard to design and mission capability upon completion of the work.

1.1.2 DESCRIPTION OF WORK: The contractor shall provide all labor and materials for the design, procurement, fabrication, maintenance, repair, and assembly, shop testing and shipping of the described hyperbaric facilities. Further, the contractor shall prepare and submit all documents, records and manuals specified herein. Some examples of the work the contractor shall design, fabricate and install are as follows:

a. Overhaul and Installation of hyperbaric facilities as described herein.
b. Submission of design, fabrication and test documents.

1.1.3 DESCRIPTION OF FACILITIES: The existing hyperbaric facilities are composed of the following items listed below. Part C6 contains record drawings and schematics of the existing facilities.

a. DSF WING: Composed of two DSF’s support systems and all piping.

1.1.4 GOVERNMENT FURNISHED EQUIPMENT (GFE): None

1.1.5 EXISTING CONDITIONS: All work is to be performed in Building 350, at the NDSTC, NSA Panama City, FL. The rooms were designed to accommodate the hyperbaric facilities. The facility is currently operational. Copies of the existing drawings of the existing systems shall be turned over to the contractor upon request.

1.1.6 LOCATION: Installation and final system testing of the hyperbaric systems will be conducted at NDSTC, NSA Panama City, FL.

1.1.7 TIME OF DELIVERY: The work shall begin (on the “Start Work date”) 15 consecutive calendar days after the "Award Date". The contract completion date is **365** consecutive calendar days after the “Award Date”. The "Award Date" is shown in Section A, block 28 of this contract. The contractor shall make no component nor material procurement until after the Preliminary Design has been

submitted, unless approval is received from the Contracting Officers Representative (COR).

1.1.8 RE-ENTRY CONTROL: The following re-entry control procedures are required to be performed by the contractor when breachment of a certification boundary is required during this contract. The re-entry control process must be coordinated with NDSTC Engineering Department diving personnel.

1.1.8.1 PRELIMINARY RE-ENTRY CONTROL: The contractor shall submit to the NDSTC Engineering Department and the Contracting Officer, at least fifteen (15) days in advance of the desired start date, the following re-entry control information:

a. Requested Work Boundaries.

b. Estimated System Down Time (in days).

c. Desired Start Date.

d. Description of work and it’s boundaries: this is to ensure pressure tight boundaries are restored where needed during applicable project work.

1.1.8.2 FINAL RE-ENTRY CONTROL DOCUMENTATION: Upon completion of the work requiring re-entry control, the contractor shall submit the following information to the NDSTC Engineering Department and the Contracting Officer:

a. Purchase orders with manufacturers letters of compliance.

b. Weld procedure and welders qualifications.

c. NDT procedure, results of NDT, and inspectors qualifications.

d. Flush procedures and results.

e. Cleaning procedure and results of cleaning.

f. Hydrostatic test procedure and results.

g. Joint identification drawings and welding log.

h. Air sample results.

i. Joint Tightness Test.

j. System Drop Test.

k. Controlled Assembly Report.

1.1.9 “AS-NEW” DEFINITION: For all components that shall be serviced, refurbished to "as new" condition, inspected, and tested, the "as new" condition of the components is that condition which is acceptable to the original design and/or meeting the requirements of the quality control provisions of the Military

Specification (MILSPEC), or commercial code for the particular component. The "as new" condition includes, but is not limited to the following: complete internal/external visual inspection, replacement of all software, operational test and cleaning. In the event the component cannot be restored to "as new" condition an in-kind replacement for the component is required. The component must pass all the tests of the original design capabilities. Justification for replacement components must be accepted by the Contracting Officer.

1.1.10 "IN KIND" REPLACEMENT DEFINITION: The "in kind" replacement of a component is defined as the identical component if the identical component is still in manufacture. In the event the identical component is no longer in manufacture, the replacement component must meet all of the requirements of the original component. The requirements of the original components can usually be obtained from the original supplier/manufacturer. If "in kind" components are not available, the COR will be notified by the contractor. The replacement components shall be reviewed and accepted by the COR prior to acquisition.

1.1.11 "HYPERBARIC" TERM: Anywhere in this specification where the term "Hyperbaric" is used, it shall be assumed (where applicable) to mean "Hyperbaric Systems".

1.1.12 "PSI" TERM: Anywhere in this specification where the term "PSI" (pounds per square inch) is used it shall be assumed (where applicable) to mean gauge pounds per square inch.

1.1.13 PRE-TESTING OF EXISTING SYSTEMS: The contractor shall pretest all overhauled facility components to determine performance of each component that is to remain in the system. Any equipment or component that successfully pass the pre-test and fail at final testing shall be replaced at the contractor's expense.

1.2 ADDITIONAL PARAGRAPHS:

1.2.1 SPECIAL PERFORMANCE REQUIREMENTS DUE TO HAZARDS TO PERSONNEL: Attention of prospective offerors is called to the fact that this contract calls for the fabrication of life sensitive support systems. Failure to adhere to the highest standards of metallurgy, welding, oxygen cleanliness and workmanship will create severe hazards to persons working on or near these systems when they are pressurized. Failure to meet these requirements may be cause for termination for default, and in any event will be cause for government rejection of components.

1.2.2 CONTRACTORS TECHNICAL RESPONSIBILITY: This specification contains technical requirements to which the contractor must adhere; however, it is the contractor's responsibility to confirm by engineering analysis that component sizes cited herein are adequate to perform the "Operational/ Performance Requirements" cited in Section 2. Typical of such items are pipe sizes, number of high pressure media storage flasks, etc. Data has been provided herein to demonstrate the conceptual feasibility of such a facility. Other technical issues that are not specified herein are at the discretion of the contractor.

The contractor shall cite their intentions in these areas in the Preliminary Design.

1.2.3 CONFORMANCE REQUIREMENTS: Omissions from the drawings or specifications or the mis-description of details of work which are manifestly necessary to carry out the intent of the drawings and specifications, or which are customarily performed, shall not relieve the contractor from performing such omitted or misdescribed details of the work but they shall be performed as if fully and correctly set forth and described in the drawings and specifications.

1.2.4 CONTRACTOR'S SPECIFICATION CHECK: The contractor shall check all drawings and specifications furnished immediately upon receipt and shall promptly notify the government of any discrepancies. Numbers marked on drawings shall in general be followed in preference to scale measurements. Large scale drawings shall in general govern small scale drawings. The contractor shall compare all drawings and verify the data before laying out the work and will be responsible for any errors that might have been avoided thereby.

1.2.5 CONTRACTOR'S SITE VERIFICATION CHECK: The contract requires the interface of new material/equipment with existing equipment in the building. The contractor is responsible for on-site verification of existing conditions. The contractor is responsible for the integration of new equipment into existing spaces, and the interface of new equipment with existing systems, such as gas, electrical, water, etc. Prior to the submission of the Final Design, the contractor is responsible for visiting the site to facilitate layout of the work.

1.2.6 STANDARD PRODUCTS: Whenever practical, use will be made of materials and equipment that are standard catalog products of manufacturers regularly engaged in the production of such materials and equipment and shall be the manufacturer's latest standard design that complies with the specification requirements. Where two or more products of a similar type are used, they will be products of the same manufacturer. Where two or more products are of a similar type that the same manufacturer's model number can be used, all the products shall be identical. Where standard products are available which have been proven successful for hyperbaric application, they shall be used. Each major component used in this installation will be clearly marked so that the manufacturer, model, serial number, and the principal characteristics of the item can readily be determined.

1.2.7 DOCUMENT SUBMITTAL SCHEDULE: The following is a summary of the documents that are required to be submitted to the government. Five copies of each document shall be submitted. Document descriptions are in Section 5, "Quality Assurance". Piecemeal submittal of documents is unacceptable; such submittals shall be returned. Submittals shall be completed and delivered no later than the dates listed below:

a. 75 Days After "Start Work Date":

1. Preliminary Design Package.
2. Quality Assurance Plan.
3. Preliminary System Manual Outline (where applicable).
4. Weld Procedures, Welders Qualification and Welder Qualification Records (where applicable).
5. 80% Valve & Component Database/Component Manufacturer's Design Data (CMDD).
6. Functional Test Plan, Painting Plan, Hydrostatic Test Plan, Cleaning Procedures and Plan; and gas sample procedures and plan (each where applicable).
7. Envelope Functional Test Plan.

b. 30 Days Before Contract Completion Date:

1. Record Drawings.
2. 100% Contractor's Records and Documents.
3. 100% Valve & Component Database/Component Manufacturer's Design Data (CMDD).
4. Final System Manual.
5. Gas Sample Reports.
6. Functional Test Records & Reports.
7. Purchase Orders.

c. Monthly Report: Each Monthly Submittal shall be delivered no later than 10 days after the beginning of each month and shall include:

1. Project Schedule.
2. Valve & Component database (latest revision).
3. Current Progress Report.

1.2.8 HYPERBARIC FACILITY CODES AND STANDARDS: The contractor's designs and all other work provided under this contract must assure in all instances that the finished hyperbaric facility conforms to the codes and standards listed below. Areas of conflict shall be brought to the attention of the government. The issue of the respective code to be used for this contract is the effective code at the time of signing of the contract.

a. ASME Boiler and Pressure Vessel Code (BPVC) Section VIII

b. NAVSEA SS521-AA-MAN-010, "U.S. Navy Diving and Manned Hyperbaric Systems Safety Certification Manual".

c. USN Navy Dive Manual SS521-AG-PRO-010

d. Hyperbaric Facilities UFC 4-159-01N (formerly DM-39, "Hyperbaric Facilities Design Manual").

e. NFPA 99, "Health Care Facilities".

f. TMCHENG/05-010-SCA

1.2.9 REFERENCE SOURCES: Reference publications are cited throughout this specification. The addresses of the sponsoring organizations are listed below, and if the source of the

publications is different from the address of the sponsoring organization, that information is also provided.

a. Military Standards (MIL-STD-, MIL-V-, MIL-Q-, etc.) can be ordered from the following address:
   Standardization Documents Order Desk
   Building 4 D
   700 Robbins Ave
   Philadelphia, PA 19111-5094

   or

   General Services Administration
   Specifications and Consumer Information
   Distribution Sections (WFSLS)
   Washington Navy Yard
   Building 197
   Washington, DC 20407

b. Navy/NAVSEA Publications:
   Navy Publications and Forms Center
   5801 Tabor Ave.
   Philadelphia, PA 19120

c. American National Standards Institute (ANSI)
   1430 Broadway
   New York, New York 10018
   Ph: 212-354-3300

d. American Society for Testing and Materials (ASTM)
   1916 Race Street
   Philadelphia, PA 19103
   Ph: 215-299-5400

e. American Society of Mechanical Engineers (ASME)
   345 East 47th Street
   New York, New York 10017

f. Compressed Gas Association, INC. (CGA)
   1235 Jefferson Davis Highway
   Arlington, VA 22202
   Ph: 703-979-0900

g. American Welding Society (AWS)
   2501 N.W. 7th Street
   Miami, FL 33125
   Ph: 305-443-9353

h. Department of Defense (DOD) publications can be ordered from the following address:

   US Army Adjutant General Publications Center
   2800 Eastern Boulevard
   Baltimore, Maryland 21220
   Ph: 301-671-2533

i. National Fire Protection Association (NFPA)

1 Batterymarch Park
P.O. Box 9101
Quincy, MA 02269-9101
Ph: (617) 770-3000

1.2.10 SECURITY REQUIREMENTS: No employee or representative of the contractor will be permitted on government property unless he/she furnishes satisfactory proof that he/she is a citizen of the United States or is specifically authorized admittance by the government.

1.2.11 STATION REGULATIONS: The contractor and their employees and subcontractors shall become familiar with and obey all station regulations including fire, traffic and security regulations. All personnel employed on the station shall keep within the limits of the work and avenues of ingress and egress. Personnel shall not enter any restricted areas unless required to do so and must be cleared for such entry. The contractor's equipment shall be conspicuously marked for identification. A Hot Work chit is required from base Fire Department prior to commencement of subject Hot Work performed at the Facility and a "designated Fire Watch" and appropriate required equipment will be provided by the contractor.

1.2.12 ACCESS TO BUILDING: Regular working hours shall be an 8 ½ hour period established by the government between 6 a.m. and 4 p.m. Monday through Friday, excluding government holidays. The contractor shall make an application for work outside of the regular working hours 15 calendar days prior to such work to the government.

1.2.13 EXISTING CONDITIONS AND EXTRA OBLIGATIONS OF THE CONTRACTOR: The contractor will be working in a specified section of the building. All other sections of the building other than the hyperbaric sections will be off limits to contractor personnel. The contractor and their employees will not be allowed outside the work area or in adjacent existing buildings without prior approval of the COR. The contractor shall not use the existing buildings for storage.

1.2.14 AVAILABILITY AND USE OF UTILITY SERVICES: The government will furnish standard utility services free of charge for the specified installation work and on-site testing. Unique utility requirements (any utility service not available from the building) are the responsibility of the contractor.

1.2.15 STORAGE AREAS: Unsecured outside space, not to exceed 1500 ft2, will be available at the site for use as a storage area. All storage facilities, at the contractor's own expense and in a manner satisfactory to the COR, shall be installed, maintained, and removed prior to the final acceptance of the work. Exact location for storage and work areas shall be provided to the contractor upon request after the award of the contract.

1.2.16 REPAIR AND RESTORATION: If the contractor, during performance of the work described herein, causes damage to other features or existing elements of the described hyperbaric facilities or

components or adjacent areas of the facility, the contractor shall repair and restore the item(s) to their original condition using similar methods and identical finish, at the contractor's expense.

1.2.17 COOPERATION WITH NAVAL DIVING & SALVAGE TRAINING CENTER PERSONNEL: Attention is invited to the fact that normal school operations cannot be interrupted. The contractor shall cooperate and schedule his work to avoid conflict with and interruption of the work of others insofar as practicable. In the case of conflict with normal school operations that cannot be resolved satisfactorily, the matter shall be referred to the Contracting Officer for decision, and such decision shall be final, subject to right of appeal in accordance with the terms of the contract.

1.2.18 HAZARDOUS MATERIALS HANDLING: The contractor is responsible for submitting a list of all Hazardous Materials proposed for use within the scope of the contract, inclusive of the Safety Data Sheets (SDS) for each separate component, a minimum of 10 days prior to scheduled usage of the materials to the COR and the Command Engineering Officer to obtain government approval. All contracting personnel involved in the "on-site" contract performance and or administration must attend a Base Environmental Brief, prior to the start of any work. This can be arranged by the Command Engineering Department or Supply Department personnel through the Base. All Hazardous materials used and waste generated in the course of the contract that are or must be removed from the Facility and Navy Base, must be disposed of in the manner as specified by the State code for disposal of non-hazardous and hazardous materials. The contractor is responsible for obtaining the DOT approved shippable containers used to transport the HAZMAT/HAZWASTE to the receiving facility. Documents signed by the receiving facility once the material reaches its final destination need to be returned to the Command Engineering Officer and copies forwarded to the Base Environmental Office, for reporting purposes.

1.2.19 KEY PERSONNEL: Personnel who are important to the performance of this project are to be identified in the proposal for the contract. Provide detailed resumes for all proposed key personnel that demonstrate their capability to perform the specific tasks as described in the Statement of Work. Provide a key personnel matrix which includes a summary description of the education, background, experience and capability of all proposed key personnel as it relates to the Work Statement. The workforce must be sized to be able to handle the scope of the project. The key personnel workforce must contain welders, technicians, and cleaning personnel who meet the qualification requirements to perform the required procedures of the statement of work.

1.2.20 WEIGHT HANDLING: The contractor shall comply with specific activity regulations pertaining to crane safety and operation (including allowable access routes and ground loading limitations) and shall notify the KO or COR in advance of any cranes entering the activity, or of any multi-purpose machines, material handling equipment, or construction equipment that may

be used in a crane-like application to lift suspended loads. The contractor is required to comply with applicable American National Standard Institute (ANSI) or ASME standards (i.e., ASME B30.5 for mobile cranes, ASME B30.22 for articulating boom cranes, ASME B30.3 for construction tower cranes, and ASME B30.8 for floating cranes, ASME B30.9 for slings, ASME B30.20 for below the hook lifting devices, ASME B30.26 for rigging hardware, and ANSI/ITSDF B56.6 for rough terrain forklifts). Cranes, machines, and rigging equipment at a naval activity, DoD activity, NAVFAC EXWC project site, or in a foreign country shall comply with the appropriate host country safety standards. Barge-mounted mobile cranes require a third party certification from an Occupational Safety and Health Administration (OSHA) accredited organization (or a third party certification from a state accredited organization for those states with OSHA approved state plans), a load indicating device, a wind indicating device, and a marine type list and trim indicator readable in one-half degree increments. Third party certification is not required for barge-mounted mobile cranes at naval activities in foreign countries.

1.2.20.1 WEIGHT HANDLING CERTIFICATE OF COMPLIANCE: The contractor shall supply a certificate of compliance; reference (a), Appendix P, Figure P-1 that the crane (or other machine if used to lift suspended loads) and the rigging equipment meet applicable OSHA and ANSI/ASME regulations citing the OSHA and ANSI/ASME regulations which are applicable (e.g., cranes/multipurpose machines used in cargo transfer will comply with 29 CFR 1917; cranes/multi-purpose machines used in construction, demolition, or maintenance shall comply with 29 CFR 1926; cranes/multi-purpose machines used in ship building, ship repair, or ship breaking shall comply with 29 CFR 1915; slings shall comply with ASME B30.9, and rigging hardware shall comply with ASME B30.26). For cranes (or other machines used to lift suspended loads) and rigging equipment at naval activities in foreign countries, the contractor shall certify that the crane (or other machine) and the rigging equipment conform to the appropriate host country safety standards. The contractor shall also certify that all of its crane (or other machine) operators working on the naval activity have been trained not to bypass safety devices (e.g., anti-two block devices) during lifting operations. The certifications are required to be posted on the crane.

1.2.20.2 CRANE OPERATOR QUALIFICATION: For mobile and commercial truck mounted cranes with OEM rated capacities of greater than 2000 pounds, the crane operator is required to be qualified by a source that qualifies crane operators (i.e., a union, a government agency, or an organization that tests and qualifies crane operators). Proof of current qualification shall be provided. Operators of cranes used in construction at activities under U.S. jurisdiction follow the qualification and certification requirements of 29 CFR 1926.1427. The contractor is required to certify (in accordance with NAVFAC P-307 Management of Weight Handling Equipment, Appendix P, Figure P-1) that the operator is

qualified and trained for the operation of the crane or machine to be used.

1.2.20.3 CRANE QUALIFICATION: Proof or authorization from the machine OEM that the machine is capable of making lifts of loads suspended by rigging equipment is required for all multi-purpose machines, material handling equipment, and construction equipment used to lift loads suspended by rigging equipment. The contractor is required to demonstrate that the equipment is properly configured to make such lifts and is equipped with a load chart.

1.2.20.4 HOOKS: All hooks used on cranes, hoists, other machines, and rigging gear are required to have self-closing latches or the throat opening will be "moused" (secured with wire, rope, heavy tape, etc.) or otherwise secured to prevent the attached item from coming free of the hook under a slack condition. The following exceptions apply and will be approved by the contractor's technical organization; items where the hook throat is fully obstructed and not available for manual securing and lifts where securing the hook throat increases the danger to personnel such as forge shop, dip tank, or underwater work.

1.2.20.5 CRITICAL LIFT PLAN: A critical lift plan is required for each of the following lifts:

a. Lifts involving hazardous materials (e.g., explosives, highly volatile substances);
b. Hoisting personnel with LHE;
c. Lifts made with more than one LHE;
d. Lifts where the center of gravity could change;
e. Lifts made when the load weight is 75% of the rated capacity of the LHE load chart or more (not applicable to gantry, overhead or bridge cranes);
f. Lifts without the use of outriggers using rubber tire load charts;
g. Lifts using more than one hoist on the same LHE;
h. Lifts involving Multiple Lift Rigging (MLR) Assemblies or other non-routine or technically difficult rigging arrangements;
i. Lifts involving submerged loads.
    1. Exception: lifts that were engineered to travel in guided slots throughout the lift and have fixed rigging and/or lifting beams, i.e., intake gates, tailgates/logs);
j. Lifts out of the operator's view.
    1. Exception: if hand signals used by a signal person in view of the operator or radio communications are available and in use, load does not exceed two tons AND is determined a routine lift by the lift supervisor;
k. Load Tests;
l. When land-based LHE mounted on barges, pontoons or other means of flotation are required to travel while lifting the load. > See Sections 16.L.03 and 16.L.04.
m. Any lift the operator believes should be considered critical.

1.2.20.6 CRITICAL LIFT PLAN (CON'T): The Critical Lift Plan will include the following as applicable:

a. The size and weight of the load to be lifted, including crane (or other machine) and rigging equipment that add to the weight (The OEM's maximum load capacities for the entire range of the lift shall also be provided.)
b. The lift geometry, including the crane (or other machine) position, boom length and angle, height of lift, and radius for the entire range of the lift (This is applicable to both single and multiple crane/machine lifts.)
c. A rigging plan; showing the lift points, rigging equipment, and rigging procedures
d. The environmental conditions under which lift operations are to be stopped
e. For lifts of personnel, the plan shall demonstrate compliance with the requirements of 29 CFR 1926.1431
f. For barge mounted mobile cranes, barge stability calculations identifying crane placement/footprint; barge list and trim based on anticipated loading; and load charts based on calculated list and trim specific to the barge the crane is mounted on (The amount of list and trim shall be within the crane manufacturer's requirements.)
g. For lifts in the vicinity of overhead power lines (i.e.; if any part of the crane or other machine; including the fully extended boom of a telescoping boom crane or machine; or the load could approach the distances noted in reference (a), Figure 10-3 during a proposed operation), the plan shall demonstrate compliance to 29 CFR 1926.1408-1411

1.2.20.7 WEIGHT HANDLING ACCIDENT NOTIFICATION: The contractor is required to notify the KO or COR as soon as practical, but no later than four hours after any WHE accident. The contractor is required to secure the accident site and protect evidence until released by the KO. The contractor is required to conduct an accident investigation to establish the root cause(s) of any WHE accident. Crane operations shall not proceed until cause is determined and corrective actions have been implemented to the satisfaction of the KO. The contractor is required to provide the KO, within 10 days of any accident, a Crane and Rigging Gear Accident Report using the form provided in Section 6 consisting of a summary of circumstances, an explanation of causes(s), photographs, and corrective actions taken.

1.2.20.8 SIGNAL PERSONS: The contractor is required to certify in the return proposal that signal persons used in construction work are qualified in accordance with 29 CFR 1926.1428.

END OF SECTION

SECTION 2

2. OPERATIONAL REQUIREMENTS: The hyperbaric facility is designed to perform the following operations and standards. **See Section 6 for schematics and figures.**

2.1 CHAMBER HYPERBARIC SYSTEMS: The PVHO's are designed and fabricated to perform with the support systems described in this specification. When fully integrated with all support systems, the PVHO's are capable of executing all decompression protocols and hyperbaric treatment tables, as well as any necessary adjunctive procedures listed in the US Navy Dive Manual.

END OF SECTION

SECTION 3

3. PIPING & INSTRUMENTATION TECHNICAL REQUIREMENTS

3.1 GENERAL REQUIREMENTS:

3.1.1 **"POWER PIPING":** Hyperbaric piping, valves and components shall conform to the requirements of ANSI B31.1, "Power Piping". This specification refers to paragraphs in B31.1. The referenced B31.1 paragraph numbers are followed by an asterisk for identification purposes (illustration, "Paragraph 100.1.1*"). The piping, valves and components shall conform to the following additional requirements.

3.1.2 **PIPING**: Paragraph 100.1.1* "This code prescribes minimum requirements for the design, material, fabrication, erection, test, and maintenance of piping systems." "Piping" is defined in paragraph 100.1.1*; pipe, flanges, bolting gaskets, valves, relief valves, and the pressure containing portions of other components. Whenever pipe is stated in this specification in general terms, it shall be assumed to state a requirement for all pipe and tube used.

3.1.3 **PROVEN COMPONENTS**: Pressure containing components shall have been proven satisfactory by successful performance under comparable US NAVY service conditions. Components for a hyperbaric facility must have proven experience in existing hyperbaric facilities for high and low pressure air, oxygen and water service. Pressure vessels (other than the PVHO's) shall meet the requirements of ASME, Section VIII, Division 1 or other as specified.

3.1.4 **MATERIAL & COMPONENTS, GENERAL**: Material, components and equipment installed in the piping systems shall be as specified and suitable for the gasses and liquids contained and for the maximum operating temperature and pressure. All valves shall be placed so that they can be easily reached, operated and maintained by a person without extensive system disassembly or the aid of special equipment, such as ladders, or they shall be provided with other means of mechanical operation. Valves shall be placed so that accompanying gauges or other displays are easily read. Pipe and tubing shall be protected from abuse and accidents and be placed for ease of operation, maintenance and replacement.

3.1.5 **CALIBRATION**: All measuring instruments, gauges, relief valves, process control transmitters, indicators, etc., requiring calibration shall have at least twelve months remaining on their respective calibration at the time of the acceptance of the facility. All calibration shall be conducted by a METCAL certified calibration shop.

3.1.6 **MATERIAL PROTECTION**: Equipment and materials shall be properly stored, adequately protected and carefully handled to prevent contamination or damage before and during installation.

Equipment and materials shall be installed, handled, stored and protected in accordance with the manufacturer's recommendations.

3.1.7 PERSONNEL PROTECTION: Belts, pulleys, chains, gears, couplings, projecting setscrews, keys and other rotating parts located so that any person can come in close proximity thereto shall be fully enclosed or properly guarded. High temperature equipment and piping so located as to endanger personnel or create a fire hazard shall be properly guarded or covered with insulation. Areas of high noise shall be properly posted and adequate safety equipment shall be supplied.

3.1.8 MANUFACTURER INSTRUCTIONS: Where installation procedures or any part thereof are required to be in accordance with the recommendations of the manufacturer of the material being installed, printed copies of these recommendations shall be furnished to the COR with the Preliminary Design Submittal. Installation of the product shall not be allowed to proceed until the recommendations are received. Failure to furnish these recommendations can be cause for rejection of the material.

3.1.9 O-RING SEALS: All piping components such as valves, check valves, relief valves, reducers, and similar equipment, shall be installed with O-ring seal unions.

3.1.10 CHASES: All piping and electrical conduit shall run in chases. The chases shall be located so that they do not interfere with operations or maintenance. In Hyperbaric operating spaces the piping, conduit and chases shall be run so as to be of minimal presence to the operators and chamber occupants. The contractor’s design shall conform to component manufacturers' requirements.

3.1.11 PIPING, GENERAL: There shall be adequate joints for disassembly, cleaning and inspection. Single lengths of piping shall not exceed 30 feet between unions. All piping installed internal to the chamber shall be configured so as to not interfere with normal operations.

3.1.12 PIPING SIZE: Piping shall be sized to a maximum gas velocity of .8 mach or less.

3.1.13 WELDED PIPING AND FITTINGS: Piping, unless otherwise specified, shall be seamless annealed stainless steel conforming to ASTM A312, Type **316L**. Pipe shall be 1/2" or larger. All tube, unless otherwise specified, shall be seamless annealed stainless steel conforming to ASTM A269, Type **316L**. All fittings shall conform to ASTM A403, Type **316L** and shall be seamless. Tube shall be 1/2" I.D. or larger, except gauge and sampling lines which will be 1/4" or larger. All Piping (pipe, tube, and fittings) located in areas external to the building shall be 316 or 316L. Traceability details (heat numbers etc.) shall be etched or permanently marked on all piping (pipe, tube, fittings, tailpieces, threadpieces, etc.).

3.1.14 PIPE MATERIAL CERTIFICATIONS: The contractor shall submit material certifications for all weld filler metal (wire, rods,

etc.), pipe and fittings used in this contract. The material certifications shall ensure that the pipe, fittings and filler meet all specification requirements. The material certifications shall include, but are not limited to: complete analysis (chemical element percentage composition), mechanical physical properties including tensile, yield, elongation, and manufacturer and manufacturing details. Vendor supplied purchase orders, Vendor Certificates of Conformance (C of C) and Mill Certs for welded pieces shall accompany all piping (pipe, tube, valves and fittings) IAW US Navy System Certification Manual, SS521-AA-MAN-10.

3.1.15 JOINT STANDARDS: Only pipe joints that are fabricated, erected, tested and inspected to nationally accepted standards may be used (typically; butt welds, socket welds, bolted flange connections, O-ring faced fittings). Others are not acceptable (typically; brazed, byte type, flared, compression fittings and threaded).

3.1.16 FLEX HOSES: Flexible hoses shall be installed at reciprocating machinery. When a flexible hose is to be subjected to considerable vibration or flexing, sufficient slack shall be provided to avoid mechanical loading. Flexible hose burst pressure shall be four times operating pressure. Flexible hoses shall be installed so that operators of the equipment are not endangered in case of failure. All flexible hoses installed shall be labeled with a metal information tag according to the requirements in the NAVSEA S6430-AE-TED-010. All flex hoses shall have an independent identification number etched on the metal identification tag and on one of the end fittings. This identification number shall correspond to all documentation related to the respective flex hose (hydrotest, cleaning, etc.) All flexible hoses shall be subjected to a hydraulic proof test equal to twice the rated working pressure of the hose (See NAVSEA S6430-AE-TED-010). All flexible hoses shall be covered with non-corrosive stainless steel wire braid. All fittings shall be constructed of non-corrosive stainless steel.

3.1.16.1 FLEX HOSE RESTRAINER: All flex hoses shall have restrainers (Safety Lines), fabricated in accordance with the U.S. Navy Diving Manual. Safety lines shall be provided for the full length of each flex hose assembly; securely fastened at both ends. In the case of charging whips, the manifold end shall be securely fastened. The working end shall have a device for securing the line to the cylinder.

3.1.17 FITTINGS ID: The inside diameter of elbows, tees and other fittings shall be equal to or greater than the pipe to which they are attached.

3.1.18 PIPING ID: Identify piping in accordance with the table listed below. Identification shall apply to piping on each segment of pipe between fittings. All valve handles, operator controls and gauge outer rings shall have color coding applied. Provide two copies of the piping identification code framed under glass or acrylic and installed where instructed by the COR.

Piping Identification

System	Color
Helium	Buff
Oxygen	Green
Helium-Oxygen Mix	Orange
Nitrogen	Light Gray
Nitrogen Oxygen Mix	Orange
Exhaust	Silver
Air	Black
Chilled Water	Blue & White
Hot Water	Red & White
Potable Water	Blue
FES	Red

3.1.19 COMPONENT TAGS: All free standing valves and components shall be tagged with identification plates of plastic laminate measuring approximately on half inch high, by one and one half inches long minimum, by one eighth inch thick, firmly attached by contact adhesive or by other means acceptable to the Government. These plates shall be marked by engraving with one quarter inch high block type identification letters/numbers, and shall be color coded as appropriate. Panel mounted identification can be made using industrial lettering machine tape or silk screened lettering on powder coated valve panels. The Component Tag index shall be submitted with the Preliminary Design. Other means of tagging may be used, but must be accepted by the COR.

3.1.20 COMPONENT IDENTIFICATION DESIGNATOR (CID): The contractor shall ensure that every component within a system has a unique identification designator consisting of letters and numbers expressed as an alphanumeric code. The assigned component identification designator shall be etched on the component. The assigned component identification designator is used to identify components in an assembly, re-entry control packages, manuals and other types of documents. The component identification designator consists of four main parts:

1. System Usage Designator
2. Component Type
3. Sequential Component Number
4. Augmenting Designator (not used in all cases)

The Usage Designator is separated from the remaining component identification number by a dash. Following the dash are the Component Type and Sequential Component Number, and if an Augmenting Designator is needed (for instance, to separate identical systems), a dash will separate the Sequential Component number and the Designator as shown in the following example: **HEO2-V1234-1**

The Component Identification numbering procedure presented above indicates that the example Component Identification Designator HEO2-V1234-1 identifies the System Usage as Helium/Oxygen Mix, and the component type is a valve, which is the one thousandth two hundredth and thirty fourth component within that (Helium/Oxygen) system. The Augmenting

Designator one, at the end of the Component Identification Designator is used when there are identical systems (i.e. Diving Simulation Facility (DSF)).

The contractor shall ensure that all components shall have the following information embedded into the each individual component drawings in the form of attributes on attached to the component designation:

1. **Valve Type (Globe, Ball, Air-Operated, etc.)**
2. **Manufacturer and contact information (address and phone)**
3. **Model Number of part**
4. **Repair Kit Identification**

The Component Identification Designation shall be conducted in accordance with **NDSTC Procedure Descriiption-2** (**PD-2) Section 34** and in accordance with Attribute requirements indicated by **PD-2**.

3.1.20.1 USAGE DESIGNATOR: Each System/Subsystem can be broken down further to identify the type of gas or liquid flowing through the System/Subsystem. The primary Usage Designators are identified in **PD-2 Section 30**.

3.1.20.2 COMPONENT TYPE DESIGNATOR: Component numbers are assigned starting at the upstream end of a piping system and continue in the direction of flow. The Component Designators are identified below:

Designator Number	**Component Description**
F	Filter
G	Gauge
V	Valve and Quick-Disconnect
C	Controller (Remote Controlled Valves)

3.1.20.3 JOINT IDENTIFICATION: The contractor shall ensure that every joint within a system (both mechanical and welded), has a unique identification designator consisting of letters and numbers expressed as an alphanumeric code. The Joint Identification shall consist of three main parts:

1. System Usage Designator
2. Joint Type
3. Sequential Number

Each part shall be separated from another using a dash as shown in the following example: **HEOX-BW-123.** The same System Usage Designators will be used for Joint Identification that were used for CID's. A list of Joint Types can be found in PD-2 Section 33. Joint Identification and attribution requirements will be conducted in accordance with PD-2.

3.1.21 PANEL ID TAGS: All panels and major subsystems shall be identified with an industrial ID plate tape. ID tag wording shall be provided with the Preliminary Design. Other means of tagging may be used, but must be approved by the COTR.

3.1.22 TUBING GUIDELINES: There shall be a length of straight tubing adjacent to the nut equal to 2 tube diameters or more. The total length of a tube assembly shall be 20 tube diameters or more. Each tube assembly shall have at least one bend equal to or greater than 90°.

3.1.23 THROTTLE VALVES: All valves that regulate flow (other than on-off function), oxygen service valves, and high pressure valves (except for those remotely actuated) are considered throttle valves. They shall be globe or needle valves. These valves shall conform to MIL-V-24109. For throttle valves which are larger than those that meet the requirements of MIL-V-24109 (3" or greater), these valves shall conform to MIL-V-24109 with respect to control of flow and pressure. Valve Handles shall be color coordinated with the color code requirements of paragraph 3.1.18.

3.1.24 SHUTOFF VALVES: All hand operated valves, other than throttling valves, shall be ball valves. They shall be two-way (bi-directional) flow, three piece, with a swing out construction, valves conforming to ASME/ANSI B-16.34 and utilizing a soft sealing surface. Socket weld end connections shall conform to ANSI B-16.11. Butt weld end connections shall conform to ANSI B-16.25. The construction materials shall be compatible with air and oxygen service. All valves shall be rated at a working pressure equal to or greater than 1 ½ times maximum possible system pressure. On panels, in which the direction in which the valve handles point indicates the open or closed position, the direction shall be the same for all valves on the panel. Valve Handles shall be color coordinated with the color code requirements of paragraph 3.1.18.

3.1.25 COMPONENT SEATS: Breathing gas components shall have seats and seals that are suitable for oxygen service.

3.1.26 LUBRICANTS: All lubricants shall be suitable for oxygen service IAW MIL-STD-1330D.

3.1.27 CHECK VALVES: All check valves shall utilize a soft sealing surface poppet or disc and spring.

3.1.28 PRESSURE GAUGES: Pressure gauges, except as otherwise specified, shall have a 4 1/2 inch dial and shall meet the following criteria:

a. Unless otherwise specified, shall be made with phosphor bronze or stainless steel, with helical coil or bourdon tube sensing elements.
b. The case shall be made of acrylonitrile butadiene styrene plastic and shall have a blowout relief device.
c. Oxygen gauges shall be cleaned and marked for oxygen service.
d. Oxygen gauges shall have a green outside case.

e. Each gauge shall be capable of isolation from the system by a three-way gauge calibration valve, which meets the requirements of MIL-V-24578, and snubber assembly.
f. They shall have an accuracy of 1% full scale unless otherwise specified.

3.1.29 GAUGE RANGE: The full range of pressure gauges shall be 130% to 150% of the maximum operational range.

3.1.30 VENT LINES: Vent lines shall be independent of each other and of other lines. All vent lines shall exhaust outside the building, and shall be so configured and capped to prevent ingress of weather or debris. They shall be designed to provide lightning protection.

3.1.31 RELIEF VALVES: Relief valves installed on PVHO and on ASME air storage flasks shall conform to and be marked and stamped in accordance with ASME Section VIII, Division 1, "Pressure Vessels". Non ASME coded relief valves shall be installed on systems other than PVHO's and ASME storage flasks. Relief valves shall be located so that the exhaust port is not nearer than 5 feet from operators, the vented gas shall be directed away from operators. Relief valves for piping greater than 1" NPT and for oxygen shall be piped outdoors. All non-ASME coded relief valves shall be adjustable-type relief valves.

3.1.32 REDUCTION STATIONS: Pressure regulating station components shall be selected so that output pressure will not drop below 90% of nominal set pressure for all conditions of flow and upstream pressure; and, maximum flow requirements shall be met under all conditions of upstream pressure and flow. Minimum upstream pressure shall be three times downstream pressure. Provide each pressure reducing station with a regulator, a filter upstream of the regulator, gauges to show the supply pressure, reduced pressure and a safety relief valve on the low pressure side with sufficient capacity to relieve the high pressure. Pressure regulators shall be capable of operating within a temperature range of 32 to 165 degrees Fahrenheit. All dome-loaded regulators shall be provided with appropriate hand loaded regulators for the adjustment of the reduced pressure downstream of the dome-loaded regulator. The exception shall be for the Scuba charge system dome loader, which shall have no hand loader and shall be set to 3300 psi. The exception for filters shall be that no filters shall be provided for maintenance panel or drive air panel regulators. All regulators shall be provided with straight thread o-ring fitting end connections.

3.1.33 FILTERS: Filters shall be provided preceding all pressure regulators, except as noted in the specification or drawings. A filter shall be provided downstream of all externally supplied supply banks ("K bottle banks for oxygen, nitrogen, etc., Liquid oxygen, Liquid nitrogen, etc.) and preceding all dome loaded regulators regardless if on the drawings or not. All filters, unless otherwise specified, shall be fabricated in accordance with ASME Section VIII Div I, and shall be capable of changing the filter element without removing the filter body from the line. It shall be capable of removing particulate larger than

10 microns unless otherwise specified. Filters shall be sized so that the pressure drop across a clean filter is not more than 2.5 percent for LP systems (500 psi and less) or not more than 15 psi for HP systems (500 psi and more) of the specified minimum inlet pressure to the regulator at maximum flow rate specified for the regulator. All filters shall be provided with straight thread O-ring fitting end connections. In an oxygen system, all components of a filter shall be manufactured using brass. In air systems, all components of the filter shall be manufactured using stainless steel.

3.1.34 UNIONS: Unions shall be installed in the piping and each end of the flexible hoses to facilitate removal and maintenance of components.

3.1.35 CONSOLES: The surfaces of consoles that are viewed by operators shall be non-reflective.

3.1.36 PANELS: Control Console's and Control Panels for hyperbaric systems shall be constructed in a panel mount configuration, with the component bodies behind the panel, and only displays or operating mechanisms exposed. **All other panels** shall be constructed in an "exposed component, surface mounted" configuration. Panels and mounting brackets shall be fabricated of aluminum. The panels shall be manufactured of a minimum of ¼ inch plate. The exposed panel surface and all brackets shall be powder coated to the required color of the panel service after fabrication. The support brackets used to support the pipe and components shall also be powder coated after fabrication. All components on the panel shall be independently supported (pipe shall not be used to support components). Panels that cannot be supported due to their weight shall be supported with leg supports that adequately support the weight of the panels.

3.1.37 WELD JOINT INTERIOR: Paragraph 111* Welded Joints-The finished interior surface of pipe joints shall be smooth in order to reduce noise in the test piping. Backing rings, if used, shall be removed. There shall be no excess reinforcement on the inside of pipe joints caused by the welding process. Machine welding or consumable inserts shall be used in the welding process to avoid any excess reinforcing of the weld. The contractor shall provide a detail description of the weld process in the Preliminary Design.

3.1.38 WELDING QUALIFICATIONS: Paragraph 127.5* Qualification. All welders, welding procedures, and procedures shall be qualified by the contractor prior to welding on this project. Qualification by a previous employer is unacceptable. The following documents shall be submitted by the contractor:

a. QW-482 Welding Procedure Specification
b. QW-483 Procedure Qualification Record
c. QW-484 Welder or Welding Operator Qualification Test

3.1.39 WELD IDENTIFICATION: All welds shall have weld identification symbols etched on the pipe base metal adjacent to the respective weld. All etched weld numbers shall correspond to the welder log

and Joint Identification Drawing (JID). The welders log and JID shall be submitted by the contractor. The welders log and JID shall contain sufficient information to cross reference between all welding qualifications, welding records, non-destructive testing (NDT) qualifications, and NDT records.

3.1.40 COMPONENT SUPPORTS: Pipe and/or tubing shall be adequately supported at intervals no greater than 100 pipe diameters, and in both directions at elbows. Components (valves, regulators, etc.) shall be supported so that the force required to operate the component or other normal operational load does not cause visual deflection, rotation or vibration. All piping that is currently installed that will not be removed shall be properly supported.

3.1.41 CONTAMINATION: Precautions shall be taken during fabrication to prevent construction dirt from entering pipe in storage or partially completed piping systems.

3.1.42 ALARMS: Alarms shall be aural and visual. Visual displays shall be LED and press to test. Each aural alarm shall have a manual shut-off. Illuminated visual alarms and displays shall be grouped as safety related or informational. Safety related alarms and displays shall be GREEN, indicating a safe condition; or RED, indicating an unsafe condition. Informational illuminated visual displays shall be WHITE. They shall indicate data such as "OPEN", "SHUT", etc.

3.1.43 OXYGEN SYSTEMS: Oxygen piping shall conform to the requirements of CGA Pamphlet G-4.4, "Industrial Practices for Gaseous-Oxygen Transmission and Distribution Piping Systems". The following are noted:

a. Pipe and fittings shall be stainless steel ASTM 316L.

b. All valves, regulators and other components shall be copper based alloy. All oxygen system valves shall meet the requirements for throttle valves as specified in paragraph 3.1.23.

c. Pipe joints shall be butt welded.

d. Vent lines shall be independent of other lines and shall vent outdoors. The vent line for venting oxygen shall be cleaned as required by this specification.

e. The oxygen vent shall be properly isolated from weather, combustibles, personnel, other systems and air compressor intakes.

f. Components for oxygen systems shall not react with oxygen nor fluorinated compounds in any way that might cause generation of heat or loss of oxygen to the surrounding atmosphere. Such components shall utilize polytetra fluoroethylene (Teflon), or fluoroethylene (Viton) seals and gaskets. All other wetted parts shall be stainless steel or as otherwise specified.

g. Gauge and sampling piping provided in oxygen systems which are ¼ inch tube may have pipe joints which are socket welded. Gauge and sampling piping lengths and the amount of socket weld fittings shall be kept to a minimum.

h. All oxygen piping shall be grounded.

i. All filter elements and housings shall be manufactured of bronze or monel.

3.1.44 NON-DESTRUCTIVE EXAMINATION: Mandatory minimum non-destructive examination of welds shall conform to the requirements of Table 136.4* and the following.

WELD TYPE	PARAMETERS	EXAMINATION
Butt Weld	P > 1000 psi Dia. > 2" P < 1000 psi and Dia. < 2"	RT RT MT or PT
Welded Branch Connections	P > 1000 psi Dia. > 2" P < 1000 psi and Dia. < 2"	RT RT MT or PT
Fillet, Socket Welds	All Sizes and Pressures	MT or PT

NOTES:

a. Welds shall be given a visual examination in addition to the examination specified above. Acceptance standards for visual examination shall be those of American Welding Society, D1.1, paragraph 8.15.1, "Quality of Welds".

b. RT=Radiographic Exam (paragraph 136.4.5*)

c. PT=Liquid Penetrant Exam (paragraph 136.4.4*).

d. MT=Magnetic Particle Exam (paragraph 136.4.3*).

3.1.45 SYSTEM CLEANING: Pipe that contains gases that will be breathed by humans shall be cleaned.

a. The contractor shall be responsible for cleaning all new piping and components, and any existing piping and components on which work is performed, to the nearest disassembly joint. Equipment, materials, instruments, personnel and laboratory services required for cleaning and certification shall be provided by the contractor.

b. The contractor shall submit their cleaning procedures to the government. Procedures for cleaning the air system must be consistent with MIL-STD-1330D. The use of organic solvents as a cleaning agent is prohibited.

c. Components which are certified clean upon delivery by the manufacturer will not require cleaning if the integrity is not violated. Components which have been shop tested and certified for cleanliness shall be bagged and removed from the system during cleaning operations. Systems may be cleaned as a whole or in sections provided all clean piping is kept isolated and free of contamination after cleaning.

d. An Air/Gas sample shall be taken from the discharge of each air supply which will be breathed by humans. The total amount of gas samples taken shall ensure that there is analysis of the entire system. An additional sample shall be taken at one of the compressor air inlets. Samples shall be taken after hydrotesting, cleaning and assembly. Air/Gas purity shall meet or exceed the standards stated in the U.S. Navy Diving Manual.

e. Gas samples shall be taken at the discharge of all other pipe gas supplies which may be breathed by humans (oxygen, nitrox, heliox,) or used for mixing of breathing supplies (nitrogen, helium, etc.). The total amount of gas samples taken shall ensure that there is analysis of the entire system. Samples shall be taken after hydrotesting, cleaning and assembly. Purity shall meet or exceed the standards stated in the U.S. Navy Diving Manual.

f. Oxygen system cleaning procedures and gas sample requirements must comply with the requirements of MIL-STD-1330D.

g. All gas samples shall be tested for the presence of unacceptable levels of all agents used in cleaning. An unacceptable level is any level less than $1/10^{th}$ the maximum OSHA eight (8) hour exposure level for any constituent in the cleaning material.

h. If liquid cleaning solutions are used requiring final H_2O rinse, the final rinse solution shall be sampled to insure cleaning agents do not remain in the system.

3.1.46 HYDROSTATIC TEST: Paragraph 137* - Leak Test. Piping shall be hydrostatically strength tested to 1-1/2 times the design pressure.

3.1.47 GAS LEAK TEST: A gas leak test shall be conducted after the hydrostatic strength test. The test shall be conducted with air unless otherwise specified. The maximum test pressure shall be the Maximum Operating Pressure. The gas pressure shall be permitted to stabilize as a result of temperature change. All possible sources of pressurization and volume storage (tanks, etc.) shall be isolated from the system. High pressure piping and low pressure piping in systems shall be tested independently. The maximum test pressure shall be safely brought to maximum operating pressure and held. After allowing for equalization, a bubble test will be performed. The pressure will then be brought to low pressure (50 psi) and left for an extended period of at least 3 hours. The pressure shall not drop.

3.1.48 PRESSURE TRANSDUCERS: The contractor shall provide for pressure transducers as called for in each section. The transducer shall have shall have a pressure range (of the commercially available options) that most closely resembles the functional pressure range. Each transducer that does not have a corresponding analog gauge (and its gauge calibration valve) gauge shall be capable of isolation from the system by a three-way gauge calibration valve, which meets the requirements of MIL-V-24578, and snubber assembly. The transducer shall meet the following criteria:

a. The transducers shall be constructed of 300 series stainless steel.
b. The electrical output of 4-20mA.
c. Shall be intrinsically safe when used with approved barriers.
d. Accuracy shall be a minimum of +/- 1% of FSO from best fit straight line.
e. Excitation voltage of 12-29.5 vDC (when used with barrier).
f. Material in contact shall be 300 series SS.
g. Proof pressure of two times rated range without damage.
h. Burst pressure of four times rated range.

3.1.49 MOTORIZED BALL VALVES: Each valve shall be a quarter turn ball valve and each operator shall be an electric actuator housed in a NEMA IV watertight enclosure with an external position indicator and manual override capability. Actuator Covers shall be color coordinated with the guidance provided in paragraph 3.1.18. Actuators shall meet specifications as follows:

3.1.49.1 LUBRICATION: Each actuator shall have a permanently lubricated gear train and self-lubricated bearings. Actuators located inside the chamber shall have a lubrication that is compatible with Diver’s Life Support Systems.

3.1.49.2 PERFORMANCE: The startup torque of the actuator shall exceed the rated breakaway torque of the associated valve at a differential pressure which is equivalent to the design pressure of the line in which the valve is installed. Each actuator shall operate on 115 VAC, 60 Hz and shall have a cycle time not exceeding 5 seconds, except for valves 4” and larger, which may have cycle times up to 10 seconds.

3.1.49.3 LOCATION: All actuators which are to be located outdoors shall be equipped with heaters, thermostats, and condensate drain plugs.

3.1.49.4 PROGRAMMABLE CONTROLLER INTERFACE: When electric actuators are operated with devices which use solid state switches, such as programmable controllers or computers, protection of the switching circuit from voltage or current higher than its rating shall be provided.

3.1.50 AIR OPERATED BALL VALVES: Where designated, each valve shall be a quarter turn ball valve and each operator shall be a double acting pneumatic actuator with an external shaft extension to permit manual actuation. Actuator Covers shall be color coordinated with the guidance provided in paragraph 3.1.18. Actuators shall meet specifications as follows:

3.1.50.1 SUPPLY PRESSURE: Actuators shall have a maximum supply pressure of at least 100 psig and a minimum supply pressure not exceeding 60 psig.

3.1.50.2 LUBRICATION: Actuators shall either be designed for operation on oil-free air or shall be disassembled, lubricated with an approved lubricant and reassembled.

3.1.50.3 RATED TORQUE: The torque output of each actuator with a supply pressure of 80 psig must exceed the rated breakaway torque of the associated valve at a differential pressure which is equivalent to the design pressure of the line in which the valve is installed.

3.1.50.4 SOLENOID PILOTS: Actuators located outside of the chambers shall have direct mounted watertight four way solenoid pilots with supply voltages of 120 VAC. Actuators located inside of the chambers shall have remote solenoid pilots located outside of the chambers. These actuators must also be suitable for use in external pressure environments of up to 226 psig and shall be provided with a manufacturer's statement to that effect. All valves must have solenoids which return the valve actuator to the closed position upon electrical failure.

3.1.51 SWIRL TRANSMITTERS: Swirl transmitters shall be linear, electronic mass gas flow meters with remote wall mounted electronics. Output shall be a 4-20 mADC signal proportional to the range of the unit. In order to provide accurate measurement, the size of the line upstream and downstream of the flow body shall match the body size for the number of pipe diameters specified by the manufacturer. Each sensor shall have an accuracy of + or – 2% of the reading plus ½% of full scale and the electronics shall be powered by 120 VAC/60 Hz. Each swirl transmitter shall have a working pressure equal to or greater than the design pressure of the line in which it is installed.

3.1.52 MUFFLERS: Unless otherwise specified, mufflers shall be shell type dispersive mufflers with connection size no smaller than associated line size. All mufflers shall be constructed of corrosion resistant stainless steel and all acoustical packing material shall be non-flammable.

3.1.53 PRESSURE SWITCHES: Each pressure switch shall consist of two separate single pole double throw switches, each with an independently adjustable set point and a non-adjustable reset point. All switches shall be protected by line snubbers, enclosed in NEMA 4 enclosures, and rated for 125 VAC/60 Hz supply voltage. Each pressure switch shall be capable of

withstanding overpressure equal to the maximum possible pressure of the line in which it is installed.

3.1.54 ELECTROPNEUMATIC TRANSDUCERS: Each Transducer shall be a loop powered force balance electropneumatic device capable of converting a 4-20 mADC input signal to a 3-15 psig output signal with a supply pressure of 20 psig. Steady state consumption shall not exceed 0.2 scfm and dynamic consumption shall be between 0.6 scfm and 4 scfm at a supply pressure of 20 psig. Each electro-pneumatic transducers shall be capable of being calibrated in place.

3.1.55 COMPONENT MOUNTING IN CONTROL CONSOLES: All components shall be mounted and aligned to correspond with the appropriate panel graphics as shown in the contract drawings. The size and shape of all controls and components shall resemble those shown on the contract drawings to the extent possible. Larger panel-mounted components, such as pressure controllers, monitors, etc. shall be provided with adequate internal supports and braces, so that they are securely mounted without causing any deflection to the panels.

3.1.56 CONTROL CONSOLE COMPARTMENTILIZATION: There are no gases routed through the main console, except for chamber gauge air and sample gases. All control enclosures shall be passively ventilated (possibly with the use of louvers) to avoid condensate as well as the accumulation of unwanted gases. All tubing in consoles and enclosures shall be run in a neat and orderly manner so as not to produce interference with the operation and maintenance of equipment. All tubes shall be labeled, grouped and secured neatly on flat bands to facilitate tracing of tube circuits. Individual tubes shall turn into and out of the flat banks in orderly sequence with a minimum of crossovers. All tubing runs shall be one continuous piece of tubing (within the cabinet or panel). In no circumstance shall tubing be run across or prevent easy access to electrical wire terminals. All pneumatic signal tubing entering or leaving the panel shall be terminated at a pneumatic terminal board and marked with an identification tag.

3.1.57 CONTROL CONSOLE PANEL SURFACE TEMPERATURE: The contractor shall ensure that the temperature of the front panels and operating controls shall not exceed 100 degrees Fahrenheit when the ambient temperature is 75 degrees when equipment is installed into the Control Consoles. Forced ventilation shall be provided if necessary.

3.1.58 CONTROL CONSOLE GRAPHICS: The contractor shall install graphics according to the following sections.

3.1.58.1 BOUNDARY MARKINGS: All control groupings shall be bounded as shown in the contract drawings. Boundary lines shall be 1/8” thick. Other lines, such as leaders to text denoting valve positions, shall be 1/16” thick. Unless otherwise specified, all border lines shall be black. The border lines for the operations panels shall be colored blue for

the Inner Lock and Outer Lock and red for the Igloo and Wetpot.

3.1.58.2 LETTERING: Lettering shall be as shown on the contract drawings. For example:

a. Valves have positional indication, i.e. "ON," "OFF," "RATE," etc.
b. Control groupings have a boundary line, with radiused corners and functional title as shown.
c. Quick connects are labeled for service/function.

Lettering shall be neat and functionally clear. Lettering on all panels and consoles shall be Helvetica style sized as scaled on the contract drawings.

3.1.58.3 SILK SCREENING: All graphics are to be silkscreened with the exception of the Control Consoles Panel with Supervisory Control Monitors. The process shall utilize sufficiently fine screen material to provide the highest clarity of lettering, without smudging or bleeding. The paint used shall be compatible with the base panel surface paint, and shall be of a type suitable for use on a control surface; lettering shall not wear off or scratch under normal use. Silk screening operations shall be performed only by personnel trained and qualified to do so.

3.1.59 UNION NUTS: Any union nuts to be used shall be manufactured of Nickel Aluminum Bronze (not Silicon Aluminum Bronze) in accordance with ASTM B150 Alloy C63200.

3.1.60 GENERAL REQUIREMENTS – ELECTRICAL

3.1.60.1 ELECRTICAL DEFINITIONS: Unless otherwise specified or indicated, electrical and electronics terms used in these specifications, and on the drawings, shall be as defined in IEEE 100.

3.1.60.2 ELECTRICAL DESIGN REQUIREMENTS: Electrical characteristics for this project shall be 460 V, three phase, 60 Hz, for large equipment and 230/120 volts, three phase, for lighting and control circuits and small motors. Final connections to the power distribution system at the existing electrical panels shown on the contract drawings shall be made by the contractor.

3.1.60.3 REFERENCES: The publications listed below form a part of this specification to the extent referenced. Use the latest issue in use at time of Contract award. The publications are referred to in the text by the basic designation only.

a. AMERICAN NATIONAL STANDARDS INSTITUTE, INC. (ANSI)

1. ANSI C2 National Electrical Safety Code
2. ANSI Z35.1 Accident Prevention Signs

b. FEDERAL SPECIFICATIONS (FS)

1. FS L-P-387(Rev. A) (Int. Amd. 2) Plastic Sheet, Laminated, Thermosetting (for Design Phase)

c. INSTITUTE OF ELECTRICAL AND ELECTRONICS ENGINEERS (IEEE)

1. IEEE 100 Dictionary of Electrical and Electronics Terms

d. NATIONAL ELECTRICAL MANUFACTURERS ASSOCIATION (NEMA)

1. NEMA ICS 6 Enclosures for Industrial Controls and Systems.

e. NATIONAL FIRE PROTECTION ASSOCIATION (NFPA)

1. NFPA 70 National Electrical Code
2. NFPA 99 Health Care Facilities

3.1.60.4 ELECTRICAL REGULATORY REQUIREMENTS: Equipment, materials, installation and workmanship shall be in accordance with the mandatory and advisory provisions of NFPA 70 and NFPA 99.

3.1.60.5 MOTORS AND EQUIPMENT: The contractor shall provide motors that shall meet all additional requirements specified in the sections covering associated mechanical equipment. Extended voltage range motors will not be permitted. Control voltage for controllers and contactors shall not exceed 120 volts nominal. When motors and equipment furnished are larger than sizes indicated, the cost of additional electrical service and related work shall be included under the section that specified that motor or equipment.

3.1.60.6 INTERPRETATION OF ELECTRICAL SCHEMATICS: Any electrical schematics and control diagrams in this contract are intended to convey functionality and to integrate with the panel drawings, piping schematics, and other contract drawings. They are not complete to the final details because that is dependent on final equipment selections among other details. The contractor shall use the schematics as a basis for laying out the controls, selecting power circuits, providing fusing and other electrical protection, and providing control transformers and DC power supplies as required. Panel indicator lights shall be on 24 volt circuits unless otherwise indicated. If no 24 volt circuits are available, voltage converters shall be provided by the contractor. Certain systems such as Fire Suppression, Chamber Lighting, and Air Pressurization are intended to have redundant functionality whereby failure in one part of the system will still leave the other part of the system to perform its function. This principle shall not be violated in final layout of the electrical power and control system. Fusing shall be used

to prevent faults in control circuits from disabling functions in other parts of control circuits. In addition, all sensitive electronic loads (microprocessor based equipment and the like) connected to the UPS shall be protected from transients and electrical noise generated by relay coils and other noise generators which are connected to the UPS circuit. All power circuits shall be labeled to convey what system is being powered.

3.1.60.7 CERTIFICATES OF COMPLIANCE: The contractor will provide submittals for active electronic components and assemblies manufactured item shall be current manufacturer's descriptive literature of cataloged products, equipment drawings, diagrams, performance and characteristic curves, and catalog cuts. Where equipment or materials are specified to conform to industry and technical society reference standards of organizations such as American National Standards Institute (ANSI), American Society for Testing and Materials (ASTM), National Electrical Manufacturers Association (NEMA), and Underwriters Laboratories Inc. (UL), submit proof of such compliance. The label or listing by the specified organization will be acceptable evidence of compliance.

3.1.60.8 PANELBOARDS: UL 67 and UL 50. Panelboards for use as service disconnecting means shall additionally conform to UL 869. Panelboards shall be circuit breaker-equipped. Design shall be such that individual breakers can be removed without disturbing adjacent units or without loosening or removing supplemental insulation supplied as means of obtaining clearances as required by UL. Where "space only" is indicated, make provisions for future installation of breaker sized as indicated. Panelboard locks shall be keyed same. Directories shall be typed to indicate the circuit number and load served by each circuit and shall be mounted in a holder behind transparent protective covering. Room numbers shall be the numbers used in the building.

a. **PANELBOARD BUSES:** Panel board buses shall be copper. Support bus bars on bases independent of circuit breakers. Main buses and back pans shall be designed so that breakers may be changed without machining, drilling, or tapping. Provide isolated neutral bus in each panel for connection of circuit neutral conductors. Provide separate ground bus identified as equipment grounding bus per UL 67 for connecting grounding conductors; bond to steel cabinet. In addition to equipment grounding bus, provide second "isolated" ground bus, where indicated.

b. **CIRCUIT BREAKERS:** FS W-C-375 thermal magnetic-type with interrupting capacity of 10,000 amperes symmetrical minimum. Breaker terminals shall be UL listed as suitable for type of conductor provided. Plug-in circuit breakers are unacceptable. The contractor shall provide compatible circuit breakers in existing (government furnished, government installed) panels when required to make

connections to these panels. The contractor shall ensure that all power provided to hyperbaric systems is Ground Fault Interrupter (GFI) protected.

c. **MULTIPOLE BREAKERS:** Provide common trip-type with single operating handle. Breaker design shall be such that overload in one pole automatically causes all poles to open. Maintain phase sequence throughout each panel so that any three adjacent breaker poles are connected to Phases A, B, and C, respectively. Size and required motor branch breakers in accordance with motor nameplate data.

d. **CIRCUIT BREAKERS WITH GROUND FAULT CIRCUIT INTERUPTER (GFCI):** UL 943 and NFPA 70. Provide with "push-to-test" button, visible indication of tripped condition, and ability to detect and trip on current imbalance of 6 milliamperes or greater per requirements of UL 943 for Class A GFCI devices.

3.1.60.9 ENCLOSED CIRCUIT BREAKERS: UL 489. Individual molded case circuit breakers with voltage and continuous current ratings, number of poles, overload trip setting, and short circuit interrupting rating as indicated. Enclosure type as indicated. Provide solid neutral.

3.1.60.10 FUSES: NEMA FU 1. Provide complete set of fuses for each fusible switch or panel. Time-current characteristics curves of fuses serving motors or connected in series with circuit breakers or other circuit protective devices shall be coordinated for proper operation. Fuses shall have voltage rating not less than circuit voltage.

3.1.60.11 INSTALLATION WIRING METHODS: Provide insulated conductors installed in conduit, except where specifically indicated or specified otherwise or required by NFPA 70 to be installed otherwise. Provide insulated, green equipment grounding conductor shall be separate from electrical system neutral conductor. Provide insulated, green conductor for grounding conductors installed in conduit or raceways. Minimum conduit size shall be 1/2 inch in diameter for low voltage lighting and power circuits. Conduit which penetrates fire walls, fire partitions, or floors shall be metallic on both sides of fire walls, fire partitions, or floors for minimum distance of 6 inches.

a. **ALUMINUM CONDUIT:** Do not install underground or encase in concrete. Do not use brass or bronze fittings.

b. **RESTRICTIONS APPLICABLE TO EMT:**

1. Do not use in feeder circuits.
2. Do not install underground.
3. Do not encase in concrete.
4. Do not use in areas subject to severe physical damage including, but not limited to, mechanical equipment rooms and electrical equipment rooms.
5. Do not use in hazardous areas.
6. Do not use outdoors.

c. **NONMETALLIC CONDUIT:** Such conduit shall not penetrate fire walls, fire partitions, or floors.

d. **METALS CLAD CABLE:** Install in accordance with NFPA 70, Type MC cable. Use of metal clad cable shall be permitted in cable trays and other non-exposed locations.

e. **POWER AND CONTROL TRAY CABLE INSTALLATION:** Install in accordance with NFPA 70, Type TC cable. Cable shall be in conduit where exposed or subject to physical damage.

f. **EXTERIOR LOCATIONS:** Conduit installed outdoors shall conform to NFPA 70 for such service and shall be rated for duty in areas subject to physical abuse.

g. **BELOW GRADE:** Conduit installed in the pipe trenches shall be suitable for service in submerged conditions. Such conduit shall be also be rated to withstand physical abuse.

h. **INSIDE CHAMBERS:** Meet NFPA 99, Chapter 20. Use rigid metal conduit with fittings meeting the paragraph "Fittings for Use in Hazardous Locations" for wiring which is not intrinsically safe. Intrinsically safe wiring may be installed using methods suitable for such wiring may also be run in the wire ways. Cutting oils and other impurities shall be thoroughly cleaned from all conduit and fittings per requirements for hazardous locations.

i. **OUTSIDE AND ADJACENT CHAMBERS:** Meet NFPA 99, Chapter 20, for such locations.

j. **WIRING LAYOUT**: Wiring in consoles and panels shall be neatly laid out and grouped to facilitate circuit tracing. Runs shall be parallel to enclosure walls or framing members. Signal and AC wiring shall be physically separated as required in NFPA 70: 725-26 "Conductors of Different Circuits in Same Cable, Enclosure, or Raceway".

k. **CABLE SUPPORT**: All cable shall be adequately supported and held in place using bundling, wire tie holders, or wire duct as appropriate. Wire duct shall be used to bundle and distribute major runs of cable. Wire duct fill shall not exceed 60% to allow for future wiring. Wires not contained in wiring ducts shall be fastened together using plastic wire wrap devices; lacing with twine is not acceptable. Bundles shall be securely fastened to the frame of the console or enclosure using standard switchboard cleats located at suitable points between the terminal blocks and the electrical devices.

l. **SHIELDING**: Where cable shielding is necessary, shields shall be grounded at one end only using the signal ground system. In the control console, this shall mean the signal ground system in the control console.

m. **FUSING**: In general, control circuit fusing is not shown on the contract drawings. The contractor shall be responsible, when laying out the wiring, for inserting fuses or circuit breakers at appropriate places. It is permissible to use light gage wire for control circuits and field wiring; fusing shall be employed to protect such wiring. Fusing shall also be used in some circuits to protect critical control functions from potential faults in other parts of a common circuit. Use fuses specified in the paragraph "Fuses" (C3.2.10) above and mount in fuse blocks specified in the paragraph "Terminal Block System" (C3.2.13.2) above.

n. **FIELD WIRING CONNECTIONS:** In general, field wiring shall be terminated at the console or enclosure terminal block system. Exceptions to this rule shall include but not be limited to the following:

1. Coax cable which will terminate on equipment in easily accessible locations.
2. Wiring which will terminate on equipment with clearly laid out and easily accessible termination systems (such as are found on signal input/output equipment and the like).

It is not the intention of this paragraph to require, nor is it desired to have, an excessive number of connections; rather it is intended that field terminations be neatly and clearly laid out, easily accessible, and easily traced. Up to 20% extra length, space allowing, of mounting rail space shall be provided for future expansion of termination points. Use end stops to hold terminal blocks and other rail mounted devices in place.

3.1.60.12 TERMINATION AND MOUNTING SYSTEM: Relay sockets, terminal blocks, fuse blocks, and where possible, other electrical devices, shall utilize the 35mm (flat) DIN rail mounting system.

a. **RELAY CIRCUITS:** These shall be a type suitable for mounting the relays and shall be a type which can be snapped on and off the mounting rail without sliding. Hold down springs shall be used to secure relays in the sockets.

b. **TERMINAL BLOCK SYSTEM:** UL approved. A termination system from a single manufacturer consisting of terminal blocks, fuse blocks, ground blocks, end brackets, partitions, jumpers, rails, snap-in marking system, and other necessary items shall be utilized. Component design shall be such that all metal parts are recessed for safety; all live circuitry shall be isolated and insulated to prohibit arcing and protect against accidental contact. Wire entries shall be chamfered to ease insertion of wires. The wire connector shall consist of a screw-clamp system which operates by compressing the wire between a serrated current bar and a serrated metal yoke to make a gas-tight, vibration-proof connection.

c. **OTHER ELECTRICAL DEVICES:** Many Electrical devices, such as signal converters, timers, and the like, are offered in a variety of housings which include DIN rail mount styles. When such a choice is available, the DIN rail mounting style shall be selected.

3.1.60.13 GROUNDING: Ground all console frames, panel and equipment enclosures to the power grounding system in accordance with the requirements NFPA 70. A separate grounding system shall be provided for signal wiring. Care shall be taken to ensure that the power and signal grounding systems are not crossed (i.e. as could occur by mis-grounding the signal ground of equipment whose signal and power grounds are common – such equipment shall be grounded to the power ground system only).

3.1.60.14 SWITCHES: All panel switches shall be of a commercial grade suitable for long life in an indoor clean environment. Switches shall be suitable for panel mounting in panel thicknesses from 0.03” to 0.25”.

a. **PUSHBUTTON SWITCHES:** It is preferred, but not required that all pushbutton switches be of a single manufacturer. Any switches from a different manufacturer will be approved on a case-by-case basis by the COR. Specific requirements and switches accessories shall be as specified herein and in other sections and shall be used to complete the part number for each switch. Switch action shall be momentary or alternate as specified. All switches shall have contacts for the connected load. Terminations shall be sealed types suitable for soldering or quick connects. Lens size shall be approximately 3/4" – 7/8” high by 1 – 1 1/4" wide. Lens style shall be matte surface, solid color, and transmitted color. Lens color shall be as indicated in the drawings. The light source for the switch shall be a LED, not a bulb. Letter size shall be largest size consistent with all lenses requiring lettering. Illuminated switches shall conform to the voltages of the circuits in which they are used and shall have manufacturer’s rated life of 10,000 hours minimum.

b. **SELECTOR SWITCHES:** These switches shall be interlocked, maintained, reciprocal release types. Each position shall have a lighted pushbutton. Contacts shall be rated at least 5A at 250 VAC. Switches shall be supplied complete with lamps and lens caps of the specified color and lettering. Number of positions and contact configuration for each position shall be as specified in the applicable sections elsewhere in the specifications.

c. **TOGGLE SWITCHES:** Provide panel-mount switches as specified.

3.1.61 ELECTRICAL DISTRIBUTION AND WIRING METHODS: This section applies generally to the power wiring, conduit, disconnect switches and circuit protection, control wiring rated over 100 volts, motor control equipment, power backup equipment, lower chamber room lighting, and the electrical connection of

mechanical equipment to the electrical power circuits. The electrical components of mechanical equipment such as motors, control or pushbutton stations, float-pressure-switches, solenoid valves, and other services functioning to control associated mechanical equipment are specified in the appropriate sections covering such work. Interconnecting wiring for components of packaged equipment shall be provided as an integral part of the equipment. Electrical equipment which are specific items in systems covered in other sections are specified in those sections. Requirements for wiring and power components inside the chambers are covered in this section.

3.1.61.1 WIRES AND CABLES: Wires and cables shall meet applicable requirements of NFPA 70 and UL for type of insulation, jacket, and conductor specified or indicated. Wires and cables manufactured more than 12 months prior to date of delivery to site shall not be used. Wiring shall be color coded to meet the requirements of the National Electric Code.

a. **CONDUCTORS:** Conductor sizes and ampere capacities are based on copper. All conductors shall be copper; aluminum conductors shall not be used. Minimum size for branch circuits shall conform to the National Electric Code and shall meet the requirements of NFPA 70.

b. **COLOR CODING:** Provide color coding for service, feeder, branch, control, and signaling circuit conductors. Color shall be green for grounding conductors and white for neutrals; except where neutrals of more than one system are installed in same raceway or box, in which case the other neutral shall be white with colored (not green) stripe. Color of ungrounded conductors in different voltage systems shall be as follows:

1. 120/208 volt, 3-phase
   (1) Phase A - black
   (2) Phase B - red
   (3) Phase C - blue
2. 277/480 volt, 3-phase
   (1) Phase A - brown
   (2) Phase B - orange
   (3) Phase C - yellow

c. **INSULATION:** Unless specified or indicated otherwise or required by NFPA 70, power and lighting wires shall be 600-volt, Type THW, THWN, XHHW, or RHW, except that grounding wire may be Type TW; remote-control and signal circuits shall be Type TW, THW, or TF. Conductors shall conform to UL 83 where lighting fixtures require 90-degree C insulation or better. Wiring completely enclosed in the SC main console may optionally be type UL style 1015 600-volt, or MIL-W-16878E/4 600-volt hookup wire.

d. **WIRING INSIDE CHAMBERS:** Wiring inside chambers shall be MIL-W-16878E/6, 250 V, Type TFE Teflon for hookup and general wiring. Where coax cable is required, use cable fabricated with Teflon insulation only and Teflon jacket. Where

shielded twisted pair cable is required for low-level signals, use cable fabricated with Teflon insulation and Teflon jacket. All wiring inside chambers shall meet NFPA 99. Use rigid metal conduit with fittings meeting the paragraph "Fittings for Use in Hazardous Locations". Cutting oils and other impurities shall be thoroughly cleaned from all conduit and fittings per requirements for hazardous locations.

e. **BONDING CONDUCTORS:** ASTM B1, solid bare copper wire for sizes No. 8 AWG and smaller diameter; ASTM B8, Class B, stranded bare copper wire for sizes No. 6 AWG and larger diameter.

f. **METAL CLAD CABLE:** Metal clad cable shall be UL 1569; NFPA 70, Type MC cable. Use only types listed for wet locations.

3.1.61.2 SPLICES AND TERMINATION COMPONENTS: Splices and Termination Components shall be UL 486A and UL 486B, as applicable, for wire connectors and UL 510 for insulating tapes. Connectors for No. 10 AWG and smaller diameter wires shall be insulated, pressure-type in accordance with UL 486A or UL 486C (twist-on splicing connector). Provide solder-less terminal lugs on stranded conductors unless otherwise indicated.

3.1.61.3 TOGGLE SWITCHES: Toggle Switches shall be FS W-S-896, totally enclosed with bodies of thermosetting plastic and mounting strap. Handles shall be of the colors used in the rest of the Hospital. Wiring terminals shall be screw-type, side-wired. Switches shall be rated quiet-type AC only, 120/277 volts, with current rating and number of poles indicated.

3.1.61.4 DISCONNECT SWITCHES: Disconnect switches shall meets the requirements of NEMA KS 1. Switches serving as motor disconnect means shall be horsepower rated. Provide heavy duty type switches where indicated, where switches are rated higher than 240 volts, and for double-throw switches. Fused switches shall utilize Class R fuse holders and fuses, unless indicated otherwise. Provide switches in NEMA 3R enclosure, per NEMA ICS 6.

3.1.61.5 PANEL BOARDS: Panel Boards shall meet the requirements of UL 67 and UL 50. Panel boards for use as service disconnecting means shall additionally conform to UL 869. Panel boards shall be circuit breaker-equipped. Design shall be such that individual breakers can be removed without disturbing adjacent units or without loosening or removing supplemental insulation supplied as means of obtaining clearances as required by UL. Where "space only" is indicated, make provisions for future installation of breaker sized as indicated. Panel board locks shall be keyed the same. Directories shall be typed to indicate the circuit number and load served by each circuit and shall be mounted in a holder behind transparent protective covering. Room numbers shall be final numbers used in the building.

a. **PANEL BOARD BUSES:** Panel board buses shall be copper. Support bus bars on bases independent of circuit breakers. Main buses and back pans shall be designed so that breakers may be changed without machining, drilling, or tapping. Provide isolated neutral bus in each panel for connection of circuit neutral conductors. Provide separate ground bus identified as equipment grounding bus per UL 67 for connecting grounding conductors; bond to steel cabinet. In addition to equipment grounding bus, provide second "isolated" ground bus, where indicated.

b. **CIRCUIT BREAKERS:** The contractor shall provide circuit breakers which shall be FS W-C-375 thermal magnetic-type with interrupting capacity of 10,000 amperes symmetrical minimum. Breaker terminals shall be UL listed as suitable for type of conductor provided. Plug-in circuit breakers are unacceptable. contractor shall provide compatible circuit breakers in existing (government furnished, government installed) panels when required to make connections to these panels.

c. **MULTIPOLE BREAKERS:** Provide common trip-type with single operating handle. Breaker design shall be such that overload in one pole automatically causes all poles to open. Maintain phase sequence throughout each panel so that any three adjacent breaker poles are connected to Phases A, B, and C, respectively. Size motor branch breakers in accordance with motor nameplate data.

d. **CIRCUIT BREAKERS WITH GFCI:** The contractor shall provide circuit breakers with GFCI in accordance with UL 943 and NFPA 70. Provide with "push-to-test" button, visible indication of tripped condition, and ability to detect and trip on current imbalance of 6 milliamperes or greater per requirements of UL 943 for Class A GFCI devices.

e. **MOTOR CIRCUIT BREAKER PANEL:** The contractor shall provide surface mounted Panel board, 3-pole, 600 A mains of a size to accommodate motor branch circuit breakers. Mount panel adjacent and wire to the existing Equipment Branch panel as shown on the drawings.

3.1.61.6 ENCLOSED CIRCUIT BREAKERS: Enclosed circuit breakers shall be in accordance with UL 489. Individual molded case circuit breakers with voltage and continuous current ratings, number of poles, overload trip setting, and short circuit interrupting rating as indicated. Enclosure type as indicated. Provide solid neutral.

3.1.61.7 FUSES: Fuses shall be in accordance with NEMA FU 1. Provide complete set of fuses for each fusible switch or panel. Time-current characteristics curves of fuses serving motors or connected in series with circuit breakers or other circuit protective devices shall be coordinated for proper operation. Fuses shall have voltage rating not less than circuit voltage.

a. **CARTRIDGE FUSES, CURRENT LIMITING TYPE (CLASS R):** These fuses shall be in accordance with UL 198E, Class time delay-type. Associated fuse holders shall be Class R only.

3.1.61.8 ELECTRICAL HULL PENETRATORS: The contractor shall be responsible for supplying any electrical penetrators necessary. The contractor shall be responsible for installing wires and potting (unless otherwise indicated) in the penetrators, installing them in the chambers, and connecting conduit to them as appropriate. The contractor shall determine the size, number, and length of conductors for each penetrator in accordance with the plans, specifications, and physical layout. The conductors shall meet requirements of the paragraph entitled, ”WIRING INSIDE CHAMBERS”, and be of such length that they do not require splicing before reaching their terminations. The conductors shall be installed and potting applied by a manufacturer regularly engaged in the production of electrical penetrators. Submit name of the manufacturer to be used. Penetrators shall be tested and certified to a minimum pressure of 150 psi (1.5 times chamber MAWP of 100 psi) applied in the direction of actual use. Penetrator threads shall be protected from damage.

3.1.61.9 CONSOLE ALARMS AND LIGHT INDICATORS: All lights and indicators (as shown in the drawings) located on the Control console shall be LED (Light Emitting Diode) based. Deviations from this must meet the approval of the Contacting Officer.

3.1.62 INPUT AND OUTPUT DATA REQUIREMENTS: The contractor shall ensure that all equipment to be installed for use with the Supervisory Control meet the following requirements.

3.1.62.1 DIGITAL INPUT REQUIREMENTS: The contractor shall provide 24 volts AC or DC modules as required. Field common voltage shall be isolated from system logic voltage. Provide fault monitoring in accordance with the paragraph “Input Fault Monitoring”.

3.1.62.2 DIGITAL OUTPUT REQUIREMENTS: The contractor shall ensure that the load characteristics shall be compatible with output channel ratings with regard to voltage, steady state and surge current ratings, minimum load currents, and maximum off state leakage current as applicable. Lamp drivers shall be suitable for such application and shall not cause on/off cycling of the lamps due to minimum load current incompatibility. Field common voltage shall be isolated from system logic voltage. DC inductive loads shall have snubber diodes installed at the load in parallel with the coil. Outputs shall default to an OFF state at power on or reset of the system. Outputs shall be wired so as to default to an OFF state on loss of power.

3.1.62.3 ANALOG INPUT REQUIREMENTS: The contractor shall ensure that analog data inputs are 4-20 mA. Calibration accuracy

shall be better than 0.1% measured at input. Absolute accuracy shall be better than 0.6% across 0° to 60°C operating temperature range. Resolution and linearity shall be better than 0.025% of full scale. Common mode noise rejection shall be greater than 100 dB at 60 Hz and normal mode rejection greater than 60 dB at 60 Hz. Field circuitry shall be isolated from logic circuitry. Provide fault monitoring in accordance with the paragraph "Signal Out-of-Range Conditions".

3.1.62.4 ANALOG OUTPUT REQUIREMENTS: The contractor shall ensure that all analog output requirements are 4-20 mA. Calibration accuracy better than 0.1% measured at input. Absolute accuracy better than 0.6% across 0° to 60°C operating temperature range. Resolution and linearity better than 0.025% of full scale. Provide short circuit protection for individual outputs. Field circuitry shall be isolated from logic circuitry.

3.2 SPECIFIC REQUIREMENTS:

3.2.1 AIR PRESSURIZATION SYSTEM:

3.2.1.1 INNER LOCK PRIMARY AIR SUPPLY PANEL: The following valves shall be overhauled to "As New" Condition as described in paragraph 1.1.9.

a. **ALP-V14-2:** This is a 1-inch electric actuated globe valve, Jordan Model 8000GSP-100-SB/BUSTERS3B300R3ARGO

b. **ALP-V15-2:** This is a 1 1/2-inch electric actuated globe valve, Jordan Model 8000GSP-150-SB/BUSTEIS3B300R3ARGO

3.2.1.2 OUTER LOCK PRIMARY AIR SUPPLY PANEL: The following valves shall be overhauled to "As New" Condition as described in paragraph 1.1.9.

a. **ALP-V3-2:** This is a 1-inch electric actuated globe valve, Jordan Model 8000GSP-100-SB/BUSTERS3B300R3ARGO

b. **ALP-V4-2:** This is a 1-inch electric actuated globe valve, Jordan Model 8000GSP-100-SB/BUSTERS3B300R3ARGO

3.2.1.3 IGLOO PRIMARY AIR SUPPLY PANEL: The following valves shall be overhauled to "As New" Condition as described in paragraph 1.1.9.

a. **ALP-V28-2:** This is a 1-inch electric actuated globe valve, Jordan Model 8000GSP-100-SB/BUSTERS3B300R3ARGO

b. **ALP-V29-2:** This is a 1 1/2-inch electric actuated globe valve, Jordan Model 8000GSP-150-SB/BUSTEIS3B300R3ARGO

3.2.1.4 WETPOT PRIMARY AIR SUPPLY PANEL: The following valves shall be overhauled to "As New" Condition as described in paragraph 1.1.9.

a. **ALP-V40-2:** This is a 1-inch electric actuated globe valve, Jordan Model 8000GSP-100-SB/BUSTERS3B300R3ARGO

b. **ALP-V41-2:** This is a 1-inch electric actuated globe valve, Jordan Model 8000GSP-100-SB/BUSTERS3B300R3ARGO

3.2.1.5 INNER LOCK EXHAUST PANEL: The following valves shall be overhauled to "As New" Condition as described in paragraph 1.1.9.

a. **EXH-V7-2:** This is a 1-inch electric actuated globe valve, Jordan Model 8000GSP-100-SB/BUSTERS3Z300R3ARGO.

3.2.1.6 OUTER LOCK EXHAUST PANEL: The following valves shall be overhauled to "As New" Condition as described in paragraph 1.1.9.

a. **EXH-V3-2:** This is a 1-inch electric actuated globe valve, Jordan Model 8000GSP-100-SB/BUSTERS3Z300R3ARGO.

3.2.1.7 IGLOO EXHAUST PANEL: The following valves shall be overhauled to "As New" Condition as described in paragraph 1.1.9.

a. **EXH-V14-2:** This is a 1-inch electric actuated globe valve, Jordan Model 8000GSP-100-SB/BUSTERS3Z300R3ARGO.

3.2.1.8 WETPOT EXHAUST PANEL: The following valves shall be overhauled to "As New" Condition as described in paragraph 1.1.9.

a. **EXH-V20-2:** This is a 1-inch electric actuated globe valve, Jordan Model 8000GSP-100-SB/BUSTERS3Z300R3ARGO.

3.2.1.9 IGLOO HOIST PANEL: The following valves shall be overhauled to "As New" Condition as described in paragraph 1.1.9 except as described below.

a. **ALP-V67-2:** This is a 3/4-inch relief valve, Fluid Mechanics Model 49434-3310.

b. **ALP-V65-2:** This is a regulator, Tescom Model 44-1312-1122.

c. **ALP-F1-2:** This is a filter, 3B model G-8535-V-25WE-N. The contractor shall clean and overhaul the sintered stainless steel filter element to "as-new" condition.

d. **ALP-V63-2:** This is a ½-inch check valve, CPV Model 123A-3.

e. **ALP-V69-2:** This is a ½-inch check valve, CPV Model 123A-3.

f. **ALP-FH1-2:** This is a ½-inch by 5-foot, 100 PSI flex hose. This flex hose shall be replaced "in kind" as described in paragraph 1.1.10.

g. **EXH-FH1-2:** This is A 1-inch by 5-foot, 100 PSI flex hose. This flex hose shall be replaced "in kind" as described in paragraph 1.1.10.

3.2.1.10 INNER LOCK HULL: The following valves shall be overhauled to "As New" Condition as described in paragraph 1.1.9 except as described below.

a. **ALP-V17-2:** This is a 1 ½-inch check valve, CPV Model 123A-7.

b. **ALP-V59-2:** This is a 1 ½-inch check valve, CPV Model 123A-7.

c. **ALP-V18-2:** This is a ¼-inch ball valve, Hy Lok Model B3VAF-4N-S316.

d. **ALP-V19-2:** This is a ¼-inch ball valve, Hy Lok Model B3VAF-4N-S316.

e. **ALP-V22-2:** This is a ¼-inch ball valve, Hy Lok Model B3VAF-4N-S316.

f. **ALP-V27-2:** This is 3/8-inch ball valve, Hy Lok Model B3VAF-4N-S316.

g. **EXH-V10-2:** This is 2-inch ball valve, Marwin Model 2333FTTF3-200.

h. **EXH-V11-2:** This is 2-inch relief valve, Hydroseal Model 33FL1HCF3L. This valve shall be reset to 133 psi.

3.2.1.11 OUTER LOCK HULL: The following valves shall be overhauled to "As New" Condition as described in paragraph 1.1.9 except as described below.

a. **ALP-V6-2:** This is a 1-inch check valve, CPV Model 123A-5.

b. **ALP-V62-2:** This is a 1-inch check valve, CPV Model 123A-5.

c. **ALP-V7-2:** This is a ¼-inch ball valve, Hy Lok Model B3VAF-4N-S316.

d. **ALP-V8-2:** This is a ¼-inch ball valve, Hy Lok Model B3VAF-4N-S316.

e. **ALP-V11-2:** This is a ¼-inch ball valve, Hy Lok Model B3VAF-4N-S316.

f. **ALP-V12-2:** This is a ¼-inch ball valve, Hy Lok Model B3VAF-4N-S316.

3.2.1.12 MEDLOCK: The following valves shall be overhauled to "As New" Condition as described in paragraph 1.1.9 except as described below.

a. **ALP-V25-2:** This is a 1/4-inch needle valve, CPV Model 480-1-P.

b. **EXH-V9-2:** This is a 1/4-inch needle valve, CPV Model 480-1-P.

c. **ALP-V24-2:** This is a ¼-inch ball valve, Marwin Model 8833FTRW-025.

3.2.1.13 IGLOO HULL: The following valves shall be overhauled to "As New" Condition as described in paragraph 1.1.9 except as described below.

a. **ALP-V51-2:** This is a 1 1/2-inch check valve, CPV Model 123A-7.

b. **ALP-V56-2:** This is a 1 1/2-inch check valve, CPV Model 123A-7.

c. **ALP-V32-2:** This is a ¼-inch ball valve, Hy Lok Model B3VAF-4N-S316.

d. **ALP-V33-2:** This is a ¼-inch ball valve, Hy Lok Model B3VAF-4N-S316.

e. **ALP-V36-2:** This is a ¼-inch ball valve, Hy Lok Model B3VAF-4N-S316.

f. **ALP-V37-2:** This is a ¼-inch ball valve, Hy Lok Model B3VAF-4N-S316.

g. **EXH-V16-2:** This is 2-inch ball valve, Marwin Model 2333FTTF3-200.

h. **EXH-V17-2:** This is 2-inch relief valve, Hydroseal Model 33FL1HCF3L. This valve shall be reset to 133 psi.

3.2.1.14 WETPOT HULL: The following valves shall be overhauled to "As New" Condition as described in paragraph 1.1.9 except as described below.

a. **ALP-V43-2:** This is a 1-inch check valve, CPV Model 123A-5.

b. **ALP-V53-2:** This is a 3/4-inch check valve, CPV Model 123A-4.

c. **ALP-V44-2:** This is a ¼-inch ball valve, Hy Lok Model B3VAF-4N-S316.

d. **ALP-V47-2:** This is a ¼-inch ball valve, Hy Lok Model B3VAF-4N-S316.

e. **EXH-V18-2:** This is 2-inch ball valve, Marwin Model 8700F-20Z-S6/ASSSWHL.

f. **EXH-V22-2:** This is 1-inch ball valve, Marwin Model 2333FTTF3-100.

g. **EXH-V23-2:** This is 1-inch relief valve, Hydroseal Model 15F5BIV3L. This valve shall be reset to 133 psi.

h. **ALP-V50-2:** This is a 2-inch check valve, CPV Model 123A-8.

i. **ALP-V2-2:** This is a 2-inch check valve, CPV Model 123A-8.

3.2.1.15 All O-rings associated with all piping in the Air Pressurization System shall be replaced "in-kind" as described in paragraph 1.1.10.

3.2.2 BUILT IN BREATHING SYSTEM:

3.2.2.1 BIBS GAS SELECTION PANEL: The following valves shall be overhauled to "As New" Condition as described in paragraph 1.1.9.

a. **ALP-V166-2:** This is a 1/2-inch globe valve, CPV Model 380-3-OX-P.

b. **ALP-V167-2:** This is a 1/2-inch globe valve, CPV Model 380-3-OX-P.

c. **MIX-V75-2:** This is a 1/2-inch globe valve, CPV Model 380-3-OX-P.

d. **O2-V7-2:** This is a 1/2-inch globe valve, CPV Model 380-3-OX-P.

e. **O2-V8-2:** This is a 1/2-inch globe valve, CPV Model 380-3-OX-P.

f. **MIX-V50-2:** This is a 1/4-inch shut-off valve, CPV Model 804SGU-04C.

g. **ALP-V74-2:** This is a 1/2-inch globe valve, CPV Model 380-3-OX-P.

h. **ALP-V77-2:** This is a 1/2-inch globe valve, CPV Model 380-3-OX-P.

i. **MIX-V3-2:** This is a 1/2-inch globe valve, CPV Model 380-3-OX-P.

j. **MIX-V4-2:** This is a 1/2-inch globe valve, CPV Model 380-3-OX-P.

k. **MIX-V5-2:** This is a 1/2-inch globe valve, CPV Model 380-3-OX-P.

l. **MIX-V6-2:** This is a 1/2-inch globe valve, CPV Model 380-3-OX-P.

3.2.2.2 BIBS ANALYZER PANEL: The following valves shall be overhauled to "As New" Condition as described in paragraph 1.1.9.

a. **MIX-V51-2:** This is a 1/4-inch regulator, Tescom Model 04-1B1ECSNNA.

b. **MIX-V52-2:** This is a 1/4-inch relief valve, Circle Seal Model D532B-2M-25. This relief valves shall be reset to 25 PSI.

3.2.2.3 OUTER LOCK: The following valves shall be overhauled to "As New" Condition as described in paragraph 1.1.9.

a. **MIX-V12-2:** This is a 1/2-inch globe valve, CPV Model 380-3-OX-P.

b. **MIX-V17-2:** This is a 1/2-inch globe valve, CPV Model 380-3-OX-P.

c. **ALP-V80-2:** This is a 1/2-inch tracking regulator, Tescom Model 44-4012-E112-002.

d. **MIX-V9-2:** This is a 1/2-inch tracking regulator, Tescom Model 44-4012-E112-002.

e. **MIX-V18-2:** This is a 1/2-inch back pressure regulator, Tescom Model 26-2910-182A.

f. **ALP-V89-2:** This is a 1/4-inch ball valve, Hypro Model B3VAF-4N-S316.

g. **ALP-V90-2:** This is a 1/4-inch ball valve, Hypro Model B3VAF-4N-S316.

h. **MIX-V13-2:** This is a 3/8-inch ball valve, Hy-Lok Model B3VF-6N-BRAS.

i. **MIX-V14-2:** This is a 3/8-inch ball valve, Hy-Lok Model B3VF-6N-BRAS.

j. **MIX-V15-2:** This is a 3/8-inch ball valve, Hy-Lok Model B3VF-6N-BRAS.

k. **MIX-V16-2:** This is a 3/8-inch ball valve, Hy-Lok Model B3VF-6N-BRAS.

3.2.2.4 INNER LOCK: The following valves shall be overhauled to "As New" Condition as described in paragraph 1.1.9 except as described below.

a. **MIX-V24-2:** This is a 1/2-inch globe valve, CPV Model 380-3-OX-P.

b. **MIX-V33-2:** This is a 1/2-inch globe valve, CPV Model 380-3-OX-P.

c. **ALP-V83-2:** This is a 1/2-inch tracking regulator, Tescom Model 44-4012-E112-002.

d. **MIX-V21-2:** This is a 1/2-inch tracking regulator, Tescom Model 44-4012-E112-002.

e. **MIX-V34-2:** This is a 1/2-inch back pressure regulator, Tescom Model 26-2910-182A.

f. **MIX-V35-2:** This is a 1/2-inch back pressure regulator, Tescom Model 26-2910-182A.

g. **ALP-V91-2:** This is a 1/4-inch ball valve, Hypro Model B3VAF-4N-S316.

h. **MIX-V25-2:** This is a 3/8-inch ball valve, Hy-Lok Model B3VF-6N-BRAS.

i. **MIX-V26-2:** This is a 3/8-inch ball valve, Hy-Lok Model B3VF-6N-BRAS.

j. **MIX-V27-2:** This is a 3/8-inch ball valve, Hy-Lok Model B3VF-6N-BRAS.

k. **MIX-V28-2:** This is a 3/8-inch ball valve, Hy-Lok Model B3VF-6N-BRAS.

l. **MIX-V29-2:** This is a 3/8-inch ball valve, Hy-Lok Model B3VF-6N-BRAS.

m. **MIX-V30-2:** This is a 3/8-inch ball valve, Hy-Lok Model B3VF-6N-BRAS.

n. **MIX-V31-2:** This is a 3/8-inch ball valve, Hy-Lok Model B3VF-6N-BRAS.

o. **MIX-V32-2:** This is a 3/8-inch ball valve, Hy-Lok Model B3VF-6N-BRAS.

3.2.2.5 IGLOO: The following valves shall be overhauled to "As New" Condition as described in paragraph 1.1.9 except as described below.

a. **MIX-V41-2:** This is a 1/2-inch globe valve, CPV Model 380-3-OX-P.

b. **MIX-V46-2:** This is a 1/2-inch globe valve, CPV Model 380-3-OX-P.

c. **ALP-V86-2:** This is a 1/2-inch tracking regulator, Tescom Model 44-4012-E112-002.

d. **MIX-V38-2:** This is a 1/2-inch tracking regulator, Tescom Model 44-4012-E112-002.

e. **MIX-V47-2:** This is a 1/2-inch back pressure regulator, Tescom Model 26-2910-182A.

f. **ALP-V92-2:** This is a 1/4-inch ball valve, Hypro Model B3VAF-4N-S316.

g. **ALP-V93-2:** This is a 1/4-inch ball valve, Hypro Model B3VAF-4N-S316.

h. **MIX-V42-2:** This is a 3/8-inch ball valve, Hy-Lok Model B3VF-6N-BRAS.

i. **MIX-V43-2:** This is a 3/8-inch ball valve, Hy-Lok Model B3VF-6N-BRAS.

j. **MIX-V44-2:** This is a 3/8-inch ball valve, Hy-Lok Model B3VF-6N-BRAS.

k. **MIX-V45-2:** This is a 3/8-inch ball valve, Hy-Lok Model B3VF-6N-BRAS.

3.2.2.6 BIBS MASKS: The contractor shall replace the existing sixteen (16) BIBS masks, Amron model 801238-01. The replacement BIBS masks shall be "In-Kind" to the existing mask in accordance with paragraph 1.1.10. Four (4) mask assemblies are located in each of the Outer Lock and Igloo and eight (8) masks are located in the Inner Lock. The contractor shall also replace the Quick Disconnects on the

BIBS manifolds with the quick disconnects that come with these mask assemblies. These include MIX-QD-F1-2 through MIX-QD-F8-2 for the outer lock, MIX-QD-F9-2 through MIX-QD-F24-2 for the Inner Lock, and MIX-QD-F25-2 through MIX-QD-F32 for the Igloo.

3.2.2.7 All O-rings associated with all piping in the Built In Breathing System shall be replaced "in-kind" as described in paragraph 1.1.10.

3.2.3 CONTROL AIR SYSTEM:

3.2.3.1 PRIMARY AIR CONTROL PANEL: The following valves shall be overhauled to "As New" Condition as described in paragraph 1.1.9 except as described below.

a. **ALP-V108-2:** This is a 1/2-inch check valve, CPV Model 123A-3.

b. **ALP-V111-2:** This is a 1/2-inch check valve, CPV Model 123A-3.

c. **ALP-V117-2:** This is a 1/2-inch check valve, CPV Model 123A-3.

d. **ALP-V120-2:** This is a 1/2-inch check valve, CPV Model 123A-3.

e. **ALP-V159-2:** This is a 1/2-inch check valve, CPV Model 123A-3.

f. **ALP-V113-2:** This is an ASME relief valve, Fluid Mechanics Model 152429-211-S16. This valve shall be reset to 110 psi.

g. **ALP-V123-2:** This is a relief valve, Fluid Mechanics Model 42334-3310-44. This valve shall be reset to 44 psi.

h. **ALP-V107-2:** This is a 3/4-inch regulator, Tescom Model 44-3213-H1123-728.

i. **ALP-V110-2:** This is a 3/4-inch regulator, Tescom Model 44-3213-H1123-728.

j. **ALP-V116-2:** This is a 3/4-inch regulator, Tescom Model 44-3213-H1123-728.

k. **ALP-V119-2:** This is a 3/4-inch regulator, Tescom Model 44-3213-H1123-728.

l. **ALP-F2-2:** This is a filter, CPV Model CAT-360-3. The contractor shall clean and overhaul the sintered stainless steel filter element to "as-new" condition.

m. **ALP-F3-2:** This is a filter, CPV Model CAT-360-3. The contractor shall clean and overhaul the sintered stainless steel filter element to "as-new" condition.

n. **ALP-F4-2:** This is a filter, CPV Model CAT-360-3. The contractor shall clean and overhaul the sintered stainless steel filter element to "as-new" condition.

o. **ALP-F5-2:** This is a filter, CPV Model CAT-360-3. The contractor shall clean and overhaul the sintered stainless steel filter element to "as-new" condition.

3.2.3.2 STANDBY AIR CONTROL PANEL: The following valves shall be overhauled to "As New" Condition as described in paragraph 1.1.9 except as described below.

a. **ALP-V126-2:** This is a 1/2-inch check valve, CPV Model 123A-3.

b. **ALP-V129-2:** This is a 1/2-inch check valve, CPV Model 123A-3.

c. **ALP-V135-2:** This is a 1/2-inch check valve, CPV Model 123A-3.

d. **ALP-V138-2:** This is a 1/2-inch check valve, CPV Model 123A-3.

e. **ALP-V144-2:** This is a 1/2-inch check valve, CPV Model 123A-3.

f. **ALP-V147-2:** This is a 1/2-inch check valve, CPV Model 123A-3.

g. **ALP-V160-2:** This is a 1/2-inch check valve, CPV Model 123A-3.

h. **ALP-V131-2:** This is an ASME relief valve, Fluid Mechanics Model 152429-211-S16. This valve shall be reset to 110 psi.

i. **ALP-V141-2:** This is a relief valve, Fluid Mechanics Model 42334-3310-44. This valve shall be reset to 44 psi.

j. **ALP-V150-2:** This is a relief valve, Fluid Mechanics Model 42334-3310-25. This valve shall be reset to 25 psi.

k. **ALP-V125-2:** This is a 3/4-inch regulator, Tescom Model 44-3213-H1123-728.

l. **ALP-V128-2:** This is a 3/4-inch regulator, Tescom Model 44-3213-H1123-728.

m. **ALP-V134-2:** This is a 3/4-inch regulator, Tescom Model 44-3213-H1123-728.

n. **ALP-V137-2:** This is a 3/4-inch regulator, Tescom Model 44-3213-H1123-728.

o. **ALP-V143-2:** This is a 3/4-inch regulator, Tescom Model 44-3213-H1123-728.

p. **ALP-V146-2:** This is a 3/4-inch regulator, Tescom Model 44-3213-H1123-728.

q. **ALP-F6-2:** This is a filter, CPV Model CAT-360-3. The contractor shall clean and overhaul the sintered stainless steel filter element to "as-new" condition.

r. **ALP-F7-2:** This is a filter, CPV Model CAT-360-3. The contractor shall clean and overhaul the sintered stainless steel filter element to "as-new" condition.

s. **ALP-F8-2:** This is a filter, CPV Model CAT-360-3. The contractor shall clean and overhaul the sintered stainless steel filter element to "as-new" condition.

t. **ALP-F9-2:** This is a filter, CPV Model CAT-360-3. The contractor shall clean and overhaul the sintered stainless steel filter element to "as-new" condition.

u. **ALP-F10-2:** This is a filter, CPV Model CAT-360-3. The contractor shall clean and overhaul the sintered stainless steel filter element to "as-new" condition.

v. **ALP-F11-2:** This is a filter, CPV Model CAT-360-3. The contractor shall clean and overhaul the sintered stainless steel filter element to "as-new" condition.

3.2.3.3 PNEUMATIC CONTROL AIR PANEL BAY 5: The following valves shall be overhauled to "As New" Condition as described in paragraph 1.1.9 except as described below.

a. **ALP-V155-2:** This is a 1/4-inch ball valve, Hypro Model B3VF-4N-5316.

b. **ALP-V156-2:** This is a 1/4-inch ball valve, Hypro Model B3VF-4N-5316.

c. **ALP-V161-2:** This is a 1/4-inch ball valve, Hypro Model B3VF-4N-5316.

d. **ALP-V162-2:** This is a 1/4-inch ball valve, Hypro Model B3VF-4N-5316.

e. **ALP-V172-2:** This is a relief valve, Circle Seal Model D532B-2M-25. This valve shall be reset to 25 psi.

f. **ALP-V173-2:** This is a relief valve, Circle Seal Model D532B-2M-25. This valve shall be reset to 25 psi.

3.2.3.4 PNEUMATIC CONTROL AIR PANEL BAY 6: The following valves shall be overhauled to "As New" Condition as described in paragraph 1.1.9 except as described below.

a. **ALP-V157-2:** This is a 1/4-inch ball valve, Hypro Model B3VF-4N-5316.

b. **ALP-V158-2:** This is a 1/4-inch ball valve, Hypro Model B3VF-4N-5316.

c. **ALP-V163-2:** This is a 1/4-inch ball valve, Hypro Model B3VF-4N-5316.

d. **ALP-V164-2:** This is a 1/4-inch ball valve, Hypro Model B3VF-4N-5316.

e. **ALP-V174-2:** This is a relief valve, Circle Seal Model D532B-2M-25. This valve shall be reset to 25 psi.

f. **ALP-V175-2:** This is a relief valve, Circle Seal Model D532B-2M-25. This valve shall be reset to 25 psi.

3.2.3.5 CONTROL AIR CHECK VALVES: The following valves shall be overhauled to "As New" Condition as described in paragraph 1.1.9 except as described below.

a. **ALP-V151-2:** This is a 1/2-inch ball valve, CPV Model 123A-3.

b. **ALP-V152-2:** This is a 1/2-inch ball valve, CPV Model 123A-3.

c. **ALP-V153-2:** This is a 1/2-inch ball valve, CPV Model 123A-3.

d. **ALP-V154-2:** This is a 1/2-inch ball valve, CPV Model 123A-3.

3.2.3.6 CONTROL AIR VOLUME TANKS: ALP-T1-2 and **ALP-T2-2** shall be inspected in accordance with TM CHENG/05-010-SCA (Hyperbaric Facility Pressure Vessels). Test plans shall be prepared and submitted by the contractor to the COR. Inspection plans are to be submitted to the COR. The condition of the volume tanks shall be submitted in a report submitted with the As-Built Submittal. This report shall report any other data revealed from the inspections. The report shall have a summary that lists all finds of the inspections and any recommended actions.

3.2.3.7 All O-rings associated with all piping in the Control Air System shall be replaced "in-kind" as described in paragraph 1.1.10.

3.2.4 DIVER'S BREATHING SYSTEM:

3.2.4.1 DBS HULL STOP VALVES: The following valves shall be overhauled to "As New" Condition as described in paragraph 1.1.9 except as described below.

a. **HEO2-V9-2:** This is a 1/2-inch globe valve, CPV Model 380-3-OX-P.

b. **HEO2-V10-2:** This is a 1/2-inch globe valve, CPV Model 380-3-OX-P.

c. **HEO2-V11-2:** This is a 1/2-inch globe valve, CPV Model 380-3-OX-P.

d. **HEO2-V12-2:** This is a 1/2-inch globe valve, CPV Model 380-3-OX-P.

3.2.4.2 DBS GAS AIR SELECTION PANEL: The following valves shall be overhauled to "As New" Condition as described in paragraph 1.1.9 except as described below.

a. **HEO2-V2-2:** This is a 1/2-inch electrically actuated globe valve, Jordan Model 8000G-050-MN-R1STWERB3WTAR00.

b. **HEO2-V4-2:** This is a 1/2-inch electrically actuated globe valve, Jordan Model 8000G-050-MN-R1STWERB3WTAR00.

c. **HEO2-V6-2:** This is a 1/2-inch electrically actuated globe valve, Jordan Model 8000G-050-MN-R1STWERB3WTAR00.

d. HEO2-V8-2: This is a 1/2-inch electrically actuated globe valve, Jordan Model 8000G-050-MN-R1STWERB3WTAR00.

e. **MIX-V71-2:** This is a 1/4-inch shut-off valve, Marwin Model 804SGU-04C.

f. **ALP-V96-2:** This is a 1/2-inch globe valve, CPV Model 123A-3-OX.

g. **ALP-V99-2:** This is a 1/2-inch globe valve, CPV Model 123A-3-OX.

h. **MIX-V53-2:** This is a 1/2-inch globe valve, CPV Model 123A-3-OX.

i. **MIX-V54-2:** This is a 1/2-inch globe valve, CPV Model 123A-3-OX.

j. **MIX-V55-2:** This is a 1/2-inch globe valve, CPV Model 123A-3-OX.

k. **MIX-V56-2:** This is a 1/2-inch globe valve, CPV Model 123A-3-OX.

l. **MIX-V57-2:** This is a 1/2-inch globe valve, CPV Model 123A-3-OX.

m. **MIX-V58-2:** This is a 1/2-inch globe valve, CPV Model 123A-3-OX.

n. **MIX-V64-2:** This is a 1/2-inch globe valve, CPV Model 123A-3-OX.

o. **MIX-V74-2:** This is a 1/2-inch globe valve, CPV Model 123A-3-OX.

p. **MIX-V62-2:** This is 1/2-inch relief valve, Fluid Mechanics Model 49434-3310. This valve shall be reset to 445 psi.

q. **ALP-V103-2:** This is 1/2-inch relief valve, Fluid Mechanics Model 49434-3310. This valve shall be reset to 445 psi.

r. **ALP-V101-2:** This is a 3/4-inch regulator, Tescom Model 44-4012-E112-002.

s. **MIX-V60-2:** This is a 3/4-inch regulator, Tescom Model 44-4012-E112-002.

3.2.4.3 DBS O2 ANALYZER PANEL: The following valves shall be overhauled to "As New" Condition as described in paragraph 1.1.9 except as described below.

a. **MIX-V73-2:** This is a 1/4-inch relief valve, Amron Model D-532-B-2-M-25. This valve shall be reset to 25 psi.

b. **MIX-V72-2:** This is a 1/4-inch regulator, Tescom Model 04-1B1ECSNNA.

3.2.4.4 WETPOT: The following valves shall be overhauled to "As New" Condition as described in paragraph 1.1.9 except as described below.

a. **ALP-V105-2:** This is a 1/4-inch ball valve, Hylok Model B3VAF-4N-S316.

b. **MIX-V68-2:** This is a 1/2-inch ball valve, Marwin Model 8700F-05Z-S6/AMNBW-HL.

c. **MIX-V70-2:** This is a 1/2-inch ball valve, Marwin Model 8700F-05Z-S6/AMNBW-HL.

3.2.4.5 All O-rings associated with all piping in the Diver's Breathing System shall be replaced "in-kind" as described in paragraph 1.1.10.

3.2.5 EMERGENCY BREATHING SYSTEM:

3.2.5.1 EMERGENCY BREATHING SYSTEM REDUCTION PANEL: The following valves shall be overhauled to "As New" Condition as described in paragraph 1.1.9 except as described below.

a. **ALP-V167-2:** This is a 1/2-inch ball valve, Hile Model E3100SSRTSW.

b. **ALP-V168-2:** This is a regulator, Tescom Model 44-3213-H1123-728.

3.2.5.2 ALP-V170-2: This is a 1/4-inch relief valve, Freeman Model M5159-6M-100. The valve shall be replaced with a Fluid Mechanics relief valve with the same capabilities as the existing relief valve. This valve shall be reset to 100 psi.

3.2.5.3 All O-rings associated with all piping in the Emergency Breathing System shall be replaced "in-kind" as described in paragraph 1.1.10.

3.2.6 FIRE EXTINGUISHING SYSTEM:

3.2.6.1 WATER SUPPLY: The following valves and components shall be overhauled to "As New" Condition as described in paragraph 1.1.9 except as described below.

a. **PW-V4-2:** This is a 1-inch relief valve, Aquatrol Model 69-1"-H20-100. The contractor shall reset this valve to 100 pi

b. **PW-BFP1-2:** This is a 2-inch back flow preventer, Ferguson/Watts Model 909-2".

3.2.6.2 FES AIR REDUCTION PANEL: The following valves shall be overhauled to "As New" Condition as described in paragraph 1.1.9 except as described below.

a. **FES-V2-2:** This is a 1-inch check valve, CPV Model 123A-5.

b. **FES-V4-2:** This is a 1-inch check valve, CPV Model 123A-5.

c. **FES-V6-2:** This is a 1-inch check valve, CPV Model 123A-5.

d. **FES-V22-2:** This is a 1-inch check valve, CPV Model 123A-5.

e. **FES-V35-2:** This is a 1-inch check valve, CPV Model 123A-5.

f. **FES-V48-2:** This is a 1-inch check valve, CPV Model 123A-5.

g. **FES-V7-2:** This is a regulator, Tescom Model 44-1313-1122

h. FES-V23-2: This is a regulator, Tescom Model 26-2320-26-079.

i. **FES-V24-2:** This is a regulator, Tescom Model DHD12BGN9D33F-13.

j. **FES-V36-2:** This is a regulator, Tescom Model DHD12BGN9D33F-13.

k. **FES-V37-2:** This is a regulator, Tescom Model DHD12BGN9D33F-13

l. **FES-V49-2:** This is a regulator, Tescom Model DHD12BGN9D33F-13.

m. **FES-V50-2:** This is a regulator, Tescom Model DHD12BGN9D33F-13.

n. **FES-V11-2:** This is an ASME 1-inch relief valve, Fluid Mechanics Model 42334-3310-S16. The contractor shall reset this valve to 400 psi.

o. **FES-V27-2:** This is an ASME 1-inch relief valve, Fluid Mechanics Model 42334-3310-S16. The contractor shall reset this valve to 400 psi.

p. **FES-V40-2:** This is an ASME 1-inch relief valve, Fluid Mechanics Model 42334-3310-S16. The contractor shall reset this valve to 400 psi.

q. **FES-V53-2:** This is an ASME 1-inch relief valve, Fluid Mechanics Model 42334-3310-S16. The contractor shall reset this valve to 400 psi.

r. **FES-F1-2:** This is a filter, 3B Model G-8539-V25WE-N. The contractor shall clean and overhaul the sintered stainless steel filter element to "as-new" condition.

s. **FES-F2-2:** This is a filter, 3B Model G-8539-V25WE-N. The contractor shall clean and overhaul the sintered stainless steel filter element to "as-new" condition.

3.2.6.3 OUTER LOCK: The following valves shall be overhauled to "As New" Condition as described in paragraph 1.1.9 except as described below.

a. **FES-V32-2:** This is a 2-inch air-operated ball valve, Marwin Model 8700F-20Z-S6/ASSBW-DA.

3.2.6.4 INNER LOCK: The following valves shall be overhauled to "As New" Condition as described in paragraph 1.1.9 except as described below.

a. **FES-V45-2:** This is a 3-inch air-operated ball valve, Marwin Model 8700F-30Z-S6/ASSBW-DA.

3.2.6.5 IGLOO: The following valves shall be overhauled to "As New" Condition as described in paragraph 1.1.9 except as described below.

a. **FES-V61-2:** This is a 3-inch air-operated ball valve, Marwin Model 8700F-30Z-S6/ASSBW-DA.

3.2.6.6 FES HAND HELD HOSES: The following shall be replaced "In Kind" to the existing flex hoses in accordance with paragraph 1.1.10. Hand-held fire hose units are to be provided in the inner lock, outer lock and igloo. Hoses shall be eleven feet long (only 6-foot long in the Outer Lock) and of rubber with an elastomer outer cover. Each hose shall be hydrotested to 2 times minimum working pressure and shall have a burst pressure of four times the minimum working pressure. Each fire hose assembly shall be equipped with a quick-opening valve and nozzle. The nozzle shall have a ¼ inch minimum orifice size.

a. **FES-FH1-2:** This is a 1/2-inch by 6-foot flex hose, with a working pressure of 400 psi.

b. **FES-FH2-2:** This is a 1/2-inch by 11-foot flex hose, with a working pressure of 400 psi.

c. **FES-FH3-2:** This is a 1/2-inch by 11-foot flex hose, with a working pressure of 400 psi.

d. **FES-FH4-2:** This is a 1/2-inch by 11-foot flex hose, with a working pressure of 400 psi.

3.2.6.7 FES VOLUME TANKS: FES-INDR1-2, FES-INDR2-2, FES-INDR3-2, and **FES-INDR4-2** shall be inspected in accordance with TM CHENG/05-010-SCA (Hyperbaric Facility Pressure Vessels). Test plans shall be prepared and submitted by the contractor to the COR. Inspection plans are to be submitted to the COR. The condition of the volume tanks shall be submitted in a report submitted with the As-Built Submittal. This report shall report any other data revealed from the inspections. The report shall have a summary that lists all finds of the inspections and any recommended actions.

3.2.6.8 FES CHAMBER INTERIOR PALM BUTTONS: The contractor shall provide for new palm buttons in the Outer Lock, Inner Lock and Igloo. The new palm button shall be used to replace the current switches that activate the deluge system in each chamber. These new switches shall be a minimum of NEMA 4 qualified. The junction box housing the new palm button switches shall be powder-coated red.

3.2.6.9 FES VOLUME TANK FLOAT SWITCHES: The contractor shall replace the magnetic level switch located in the each of the four (4) FES Volume Tanks. l There are deluge tanks for the Outer Lock, Inner Lock, Igloo, and Hand Held Hose Tank for all three chambers. The replacement level switch shall be "in kind" to the existing level switch as described in paragraph 1.1.10.

3.2.6.10 All O-rings associated with all piping in the Fire Extinguishing System shall be replaced "In-Kind" as described in paragraph 1.1.10.

3.2.7 WETPOT FILL AND DRAIN:

3.2.7.1 WFD VALVES: The following valves and components shall be overhauled to "As New" Condition as described in paragraph 1.1.9 except as described below.

a. **FD-V2-2:** This is a 2-inch check valve, CPV Model 12D-R.

b. **FD-V5-2:** This is a 2-inch ball valve, Marwin Model 8700F-20Z-S6/ASSSW-HL.

c. **FD-V6-2:** This is a 1-inch ball valve, Marwin Model 8700F-10Z-S6/ASSSW-HL.

d. **FD-V8-2:** This is a 1-inch ball valve, Marwin Model 8700F-10Z-S6/ASSSW-HL.

e. **RV-PW-V4-2:** This is a water system relief valve. This valve shall be replaced "In Kind" to the existing water system relief valve on DSF-1.

f. **PW-BFP1-2:** This is the backflow preventer for the Wetpot Fill and Drain System. This unit shall be overhauled to "As New" condition.

3.2.7.2 All O-rings associated with all piping in the Wetpot Fill and Drain System shall be replaced "In-Kind" as described in paragraph 1.1.10.

3.2.8 ATMOSPHERIC CONDITIONING SYSTEM:

3.2.8.1 ACS BALL VALVES: The following valves and components shall be overhauled to "As New" Condition as described in paragraph 1.1.9 except as described below.

a. **ACS-V1-2:** This is a 1/2-inch ball valve, Swagelok Model SS-63TSW8P.

b. **ACS-V2-2:** This is a 1/2-inch ball valve, Swagelok Model SS-63TSW8P.

c. **ACS-V3-2:** This is a 1/2-inch ball valve, Swagelok Model SS-63TSW8P.

d. **ACS-V4-2:** This is a 1/2-inch ball valve, Swagelok Model SS-63TSW8P.

3.2.8.2 ACS FLEX HOSES: (**ACS-FH1-2, ACS-FH2-2, ACS-FH3-2, ACS-FH-4-2, ACS-FH5-2,** and **ACS-FH6-2)** The listed flex hoses shall be replaced "In Kind" to the existing flex hoses in accordance with paragraph 1.1.10. The replacement flex hoses shall be in accordance with paragraph 3.1.16.

3.2.8.3 All O-rings associated with all piping in the Atmospheric Conditioning System shall be replaced "In-Kind" as described in paragraph 1.1.10.

3.2.9 SPLIT MIX ROOM SUPPLY AND REDUCTION PANELS:

3.2.9.1 BIBS OXYGEN REDUCTION PANEL: The following valves and components shall be overhauled to "As New" Condition as described in paragraph 1.1.9 except as described below.

a. **O2-MP-V004:** This is a regulator, Tescom Model 44-1312-1122

b. **O2-MP-V006:** This is a regulator, Tescom Model 44-1312-1122

c. **O2-MP-V007:** This is a ½-inch Fluid Mechanics relief valve. This valve shall be reset to 275 psi.

d. **O2-MP-V008:** This is a ½-inch Fluid Mechanics relief valve. This valve shall be reset to 275 psi.

e. **O2-HP-F001 AND O2-HP-F002 FILTERS REPLACEMENT:** These filters are Norman filters model 4535-GG-10DN. These oxygen filters shall each be replaced with a brass or bronze based model and shall meet the requirements of paragraph 3.1.33 and 3.1.45.

3.2.9.2 BIBS MIX REDUCTION PANEL: The following valves and components shall be overhauled to "As New" Condition as described in paragraph 1.1.9 except as described below.

a. **MIX-MP-V009:** This is a regulator, Tescom Model 44-1312-1122

b. **MIX-MP-V004:** This is a ½-inch Fluid Mechanics relief valve. This valve shall be reset to 275 psi.

c. **MIX-HP-F001 FILTER REPLACEMENT:** These filters are Norman filters model 4535-GG-10DN. These oxygen filters shall each be replaced with a brass or bronze based model and shall meet the requirements of paragraph 3.1.33 and 3.1.45.

3.2.9.3 HEO2 BANK PANELS:

a. **HEO2-HP-F001, HEO2-HP-F002, HEO2-HP-F003, AND HEO2-HP-F004 FILTERS REPLACEMENT:** These filters are Norman filters model 4535-GG-10DN. These heliox filters shall each be replaced with a brass or bronze based model and shall meet the requirements of paragraph 3.1.33 and 3.1.45. The contractor shall replace the missing tag on AHP-F001.

b. **HEO2 BANK FLEX HOSES:** (**HEO2-HP-H001, HEO2-HP-H002, HEO2-HP-H003, HEO2-HP-H004, HEO2-HP-H005, HEO2-HP-H006, HEO2-HP-H007, HEO2-HP-H008, HEO2-HP-H009, HEO2-HP-H010, HEO2-HP-H011, HEO2-HP-H012, HEO2-HP-H013, HEO2-HP-H014,** and **HEO2-HP-H015,)** The listed flex hoses shall be replaced "In Kind" to the existing flex hoses in accordance with paragraph 1.1.10. The replacement flex hoses shall be in accordance with paragraph 3.1.16.

3.2.9.4 BIBS AIR REDUCTION PANEL:

a. **AHP-F001 and AHP-F002:** These filters are Norman filters model 4535-GG-10DN. The contractor shall clean and overhaul the sintered stainless steel filter element to "as-new"condition.

b. **AHP-V004** and **AHO-V006:** The regulators are Tescom Model 44-1312-1122.

c. **AMP-V007** and **AMP-V008:** These are a ½-inch Fluid Mechanics relief valves. These valves shall be reset to 275 psi.

3.2.9.5 All O-rings associated with all piping in the Split Mix Room Supply and Reduction Panels shall be replaced "In-Kind" as described in paragraph 1.1.10.

3.2.10 CHAMBER LIGHTING SYSTEM

3.2.10.1 CHAMBER LIGHTING DESCRIPTION OF WORK: The contractor shall provide for the Chamber Lighting System as described herein. The system supplied shall be complete, fully tested, and ready to use. The Chamber Lighting System shall meet the requirements of the base. The contractor shall provide for all wiring, fittings, and connections required. A new lighting system shall be provided from externally mounted light tubes meeting the requirements of NAVSEAINST. 10560.2E. Dimmer switches shall be installed on the chamber control console for control of the new lights.

The contractor shall provide for all equipment and wiring to allow installation of the new lighting system. The system supplied shall be complete, fully tested and ready to use. The CL shall be configured "in kind" to DSF-1.

3.2.10.2 CHAMBER LIGHTING FIXTURES: Lighting shall be provided from externally mounted light tubes. The Outer Lock shall have two (2) lights installed. The Inner Lock shall have eight (8) lights installed. The Igloo shall have three (3) lights installed. The Wetpot shall have eight (8) lights installed. Each of the fixtures shall be 250 watt, waterproof, with threadless flanges suitable for the hull thickness where they are mounted.

3.2.10.3 EXTERIOR CONDUIT: Conduit exterior to the chamber shall be rigid and painted to match the exterior color of the chambers. All other conduit shall meet the requirements of the base contract.

3.2.10.4 CHAMBER LIGHTING CONTROLLERS: The contractor shall provide chamber lighting controller that are "In Kind" to the chamber lighting controllers of DSF-1.

3.2.11 COMMUNICATION SYSTEM

3.2.11.1 WIRELESS COMMUNICATIONS SYSTEM: The contractor shall provide a wireless communications to replace the existing wireless communications system. The existing wireless communications system is UHF based and shall come complete with a base station and four belt packs and headsets each. Two four-gang drops in charger shall be provided. Both the base station and each belt pack shall be capable of scanning for clear and tell the user which RF frequency to set the system up on. Each beltpack shall be able to set up two distinct intercom channels, one at a time. All beltpacks share access to the same two intercom channels and any combination of beltpacks can utilize either channel at any time. The two different wireless systems shall not cause for interference between themselves. Both the base station and the beltpacks have LCD displays that allow the user to easily and quickly make changes to the operating parameters of the system. The eight beltpacks associated with the two base stations shall be capable of operating in one operational band. The contractor shall replace the existing wireless communication antenna. Any wireless communications system installed by the contractor shall not interfere with any other wireless communications system at NDSTC.

3.2.11.2 IGLOO AND WETPOT DIVERS COMMUNICATIONS SYSTEM: The contractor shall provide for a new system to communicate to all divers in the Igloo and Wetpot. The new system will provide for simultaneous round robin communications between all four divers in the Wetpot, the standby diver in the Igloo, and the operators at the control console. Communications with the divers shall be made through an interface connection (type TDB) with the divers' helmets.

Installation shall contain all conduit, bracketing, mounting, etc, to provide a complete installation. The system shall be powered by standard 110 VAC power during normal operations and shall contain an integral battery power system for emergency use. The contractor shall provide all wiring and connections necessary for connection with the diving rigs through the umbilicals to provide a complete and usable system. A headset with boom microphone shall be provided for the Dive Supervisor.

3.2.12 DIVERS MONITORING SYSTEM

3.2.12.1 DIVERS MONITORING SYSTEM: The contractor shall replace the existing divers monitoring system including all internal and external cameras, monitors, and digital video recorders. The updated equipment shall be of higher spec and resolution than the existing equipment.

a. Video Monitoring of each chamber (two cameras each).
b. Two Monitors on the Control Console for each chamber, one that can be set to show any camera's view or a three-place matrix of the all of the camera's view.
c. Digital Video Recorder

3.2.12.2 CONSOLE MONITORS: The contractor shall provide for two monitors for each of the four lock of the DSF. These units shall be mounted on the front of the Control Console and sized to fit in the existing location of the existing monitors. They shall have a minimum resolution of 720p. The contractor shall provide all wiring and brackets necessary so that they are complete and usable upon final installation.

3.2.12.3 CONDUCTORS: Provide coaxial cable or other conductors meeting the recommendations of the manufacturers of the equipment in this section. Terminate coaxial cables (or other connections) with connectors compatible with the equipment using tools and procedures intended for the purpose.

3.2.12.4 INTERIOR CAMERAS: The contractor shall provide for one (1) interior camera in the Outer Lock, two (2) interior cameras in the Inner Lock, two (2) interior cameras for the Igloo. The cameras shall be manufactured so that they have solid bodies with no air cavity except in the lens and otherwise They shall meet all criteria for use inside a US Navy Chamber. The body shall be waterproof to 200 PSI and shockproof. The lens cavity shall be filled with inert nitrogen to prevent fogging under adverse conditions. The cameras shall have 8 LED lights set for illumination.

a. **OUTER LOCK:** The one camera in the Outer Lock shall have a magnetic mount as described below.

b. **INNER LOCK:** One camera shall be fix-mounted with Click-Bond and located above the IL/OL door. The camera shall be situated as to provide for maximum coverage of the Inner

Lock. The other camera will be magnetically mounted as described below.

c. **IGLOO:** One camera shall be fix-mounted with Click-Bond and located above the IG/IL door. The camera shall be situated as to provide for maximum coverage of the Igloo. The other camera will be magnetically mounted as described below.

d. **MAGNETIC MOUNTS FOR THE IGLOO INTERIOR CAMERA:** The contractor shall provide for a magnetic-type mounts for the interior cameras. The mount will act so that the camera may be situated in such a fashion as to allow the magnetic mount to be moved to different points in the chamber (allowing the external Dive Supervisor) to view a diver at any point in the chamber). The mount will have a universal ball joint so that the camera may be set to any viewing angle.

e. **OUTER LOCK EXTERIOR CAMERA:** This camera shall be a fixed mount camera located in the position of the existing exterior camera for the Outer Lock. It shall be positioned to maximize the performance of the rest of the Divers Monitoring system.

3.2.12.5 OUTER LOCK EXTERIOR CAMERA: This camera shall be a fixed mount camera located in the position of the existing exterior camera for the Outer Lock. It shall be positioned to maximize the performance of the rest of the Divers Monitoring system.

3.2.12.6 DIGITAL VIDEO RECORDER: The contractor shall provide for a digital video recorder (DVR) for the chamber occupant monitoring system. The DVR shall be capable of being selected on any one interior or exterior camera as described above. The DVR shall have a means of easy offload of video (USB port, Firewire Port, or DVD recorder). The DVR shall have memory capacity of a minimum of 100 hours of Standard Definition (HD) video. The DVR shall be installed in the Data Logging Station above the Control Console. The contractor shall provide for all wire connections and switches for the DVR and its switching capability.

3.2.12.7 OVERVIEW MONITORS: The contractor shall provide for the two overview monitors for matrix viewing of all cameras in the Divers Monitoring System (8). These monitors shall be a minimum of 42-inches diagonal and shall have a minimum resolution of 720 p. The two monitors shall be installed at each end of the Control Console. The contractor shall provide all brackets and supports necessary to secure the monitors to the top of the console. The contractor shall provide all wiring, conduits or other materials necessary for a complete and usable system upon final installation.

3.2.13 GAS ANALYSIS SYSTEM

3.2.13.1 O2, TEMPERATURE, & CO2 MONITORS: The O2, and CO2 Monitoring are currently done in one standard combined unit for each

of the Outer Lock, Inner Lock and Igloo. The contractor shall replace each single unit with two analyzers: one for oxygen monitoring and the other for atmospheric carbon dioxide monitoring. There shall be one set of these units for each for the Outer Lock, Inner Lock, and Igloo. The unit shall be an external panel mount main unit fitting into a half 19" rack or panel cutout. The contractor shall provide all piping, wiring, brackets, and console modification required to make these systems complete and usable upon completion.

a. **ATMOSPHERIC OXYGEN MONITORS:** These monitors shall be capable of operating in the environment in which they will be installed. They shall account for the expected temperature range found in both the control console area and inside each chamber of the DSF. The monitor shall be capable of being calibrated in place. The monitor shall have a range of 0-100%. The monitor shall have a digital display and shall display units to a minimum of one decimal place. The unit shall have accuracy to plus-or-minus 1 percent. The monitor shall have a high alarm adjust to 23% O2. The alarm shall be both audio and visual. The oxygen sensor shall be located as close to each chamber as feasible. The oxygen sensor shall have a minimum life of 2 years (based on atmospheric air).

b. **ATMOSPHERIC CARBON DIOXIDE MONITORS:** These monitors shall be capable of operating in the environment in which they will be installed. They shall account for the expected temperature range found in both the control console area and inside each chamber of the DSF. The monitor shall have a digital display and shall display units to a minimum of one decimal place. The monitor shall have an infrared mode of operation. The monitor shall be capable of being calibrated in place. The monitor shall have accuracy to plus-or-minus 0.1 percent. The monitor shall have a low alarm adjust to 2% CO2. The alarm shall be both audio and visual. The carbon-dioxide sensor shall be located as close to each chamber as feasible. The oxygen sensor shall have a minimum life of 2 years (based on atmospheric air).

3.2.14 SUPERVISORY CONTROL SYSTEM (SCS): The (SCS) consists of human-machine interface (HMI) components which operate and monitor the automated control system of the DSF-2 hyperbaric facility.

The various systems supporting the DSF-2 are primarily controlled and/or monitored via the Main Control Consoles.

The consoles present a hardware and software user interface to the facility operators. Hardware interfaces are presented as numerous actual switches, buttons, indicator lights, displays, gauges and dials. Software interfaces are presented via a Graphic User Interface (GUI) at six stations that present virtual controls and status displays to the operators. The GUI provides the primary interface to the SCS which is capable of automatically operating the necessary functions to run and monitor a hyperbaric treatment profile under computer control. The DSF consists of four Pressure Vessels for Human Occupancy (PVHO), the Outer Lock (OL), Inner Lock

(IL), Igloo (IG) and Wetpot (WP). Further explanation is provided in the Concept of Operations (Section 6). **It should be noted that the operating range for DSF-2 is being changed from 0-600 Feet of Seawater (FSW) to 0-300 FSW.**

The Main Control Consoles and the PLC control and monitor most of the DSF-1 major subsystems and many of the minor subsystems. Six nearly identical GUI's, four are used as Operating Station controls (with one configured for System Manager Interface) and two are used as Standby Operating Station controls. Optionally, or in the event of a PLC supervisory control failure, the system can be switched into and operated in a completely manual mode via the Standby Operating Stations. The following simple block diagram illustrates the general system architecture.

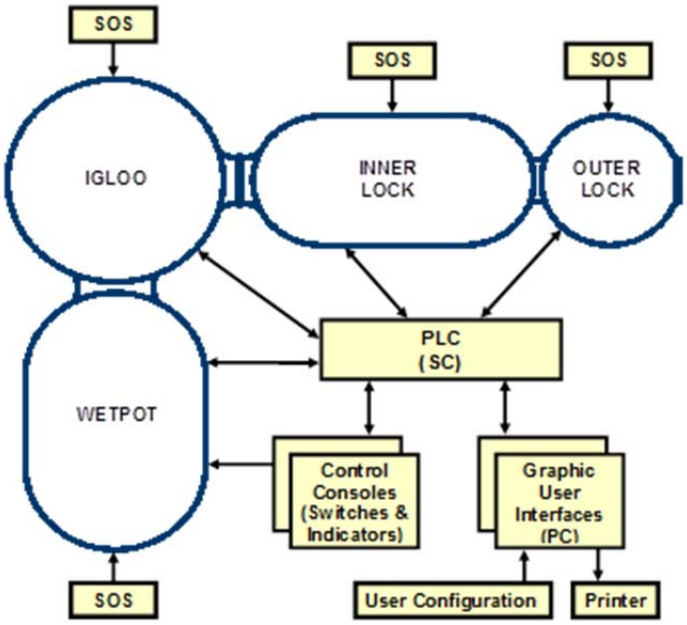

3.2.14.1 GENERAL DESCRIPTION: The contractor shall provide for an overhauled SCS. The contractor shall update all PLC diagrams and electrical schematics to represent the changes in hardware installed during this overhaul. The Supervisory Control System shall perform the following principle functions:

a. All functions present in existing SC control system.

b. Ability to provide data logging of all chamber interior occupants.

c. Four different login levels (System Observer, System Operator, System Maintenance Technician, and System Administrator) to control security of operations and code, as well as provide a non-login capability for System Observer (view active screens only with no ability to affect operation). Refer to Concept of Operations for details.

d. Automated operation of the Air Pressurization System (APS) according to all U.S Navy Diving Tables and tables built in administrator "Profile Builder" (see Section 6) mode.

e. Receive power from and be compatible with the existing Uninterruptible Power Supply (UPS).

3.2.14.2 PROGRAMMABLE LOGIC CONTROLLER (PLC): The contractor shall provide a new upgraded PLC and a redundant PLC as part of the Supervisory control System. The new PLCs shall be the upgraded version of the "In Kind" replacement PLC. Each PLC and Relay Rack shall have shall have dual power supplies. The PLC manufacturer, model and capabilities shall be presented during the design phase of the GUI Control System. Each PLC will load from Secure Digital (SD) cards on each boot or reboot of the system. The contractor shall provide all design, programming, wiring, equipment, installation, testing, and management required for the PLC.

3.2.14.3 CONTROLS INSTALLATION: The contractor shall provide all field devices, loop checks and other equipment necessary to facilitate the installation of the GUI Control System. The manufacturer, model number and capabilities of all equipment shall be "in kind" to the existing NDSTC controls.

3.2.14.4 GRAPHIC USER INTERFACES (GUI): The contractor shall provide six (*6*) industrial personal computer (PC) with touch-screen interface to provide for the user interface as part of the GUI Control System (console mounted). The touch screens shall be sized to fit in the locations of the existing GUI. The new GUIs shall be the upgraded model of the "in Kind" replacement. The contractor shall be responsible for all wiring, components, programming and equipment necessary for installation and testing of the User Interface. The software for each GUI shall be upgraded with the latest operating system that is supported by the manufacturer. The GUIs shall also include 3-years of factory support.

3.2.14.5 LOGIN MODES: The contractor shall provide for four (4) different login modes for each of four (4) total GUI interface station. The first, called "System Observer" shall allow the individual logged in to view any of the different GUI screens but may not change operation of the system. The second, called "System Operator" shall allow the individual logged in to view any screen and operate any function with the exception of the Profile Builder (see Section 6) and have access to source code. The third, called "System Maintenance Technician" shall allow the individual logged in to view any screen, operate any function and change system parameters when needed for testing. The fourth, called "System Administrator" shall be allowed to access all screens and functions.

3.2.14.6 PROFILE BUILDER: A pressure profile is defined as a collection of data that defines, or that can be used to calculate, chamber pressure control set points versus time. A single profile defines a ramp and soak routine that will sequence a chamber from surface pressure to pressurized conditions and back to the surface. Such a routine of consecutive ramp and soak segments defines a "dive" of the chamber. Only an operator with an ADMINISTRATOR MODE login shall be able to access the Profile Builder. Each segment in a profile is defined by:

a. A segment number related to the segment's order of occurrence in the profile. The number of segments in a profile shall be between three and sixty inclusive.

b. Segment starting pressure and ending pressure

c. Segment duration – must be expressed in minutes up to one decimal place.

d. The GUI will calculate the "travel rate" (accurate to greater than 4 decimal places, displayed to one decimal place rounded off) parameter equal to the segment ending pressure minus segment starting pressure all divided by duration – given in units of (FSW/min or FPM).

The following features are incorporated into the Profile Builder data entry screen:

a. The operator is prompted to enter a unique profile name of up to eight (8) characters. If the profile name exists, the operator is given the choice to choose a different name or to edit the existing profile.

b. The operator is then prompted to enter the following segment parameters, all on a single "segment entry" line. There are two (2) segments per step. A travel segment and a duration segment per step. The travel segment time is calculated and displayed but not counted down on a timer as mechanical restrictions may introduce discrepancies.

c. The GUI shall generate error messages for inappropriate data entries and allow the operator to reenter the segment data. Inappropriate entries are defined as pressure endpoints that do not equate and travel rates that are outside of the systems capabilities (as set by the administrator).

d. After the proper data has been displayed for a segment, the segment information, including the program calculated travel rate, are added to a running list of the profile segment data on the screen. The data prompts for the next segment entry line is also displayed.

e. The operator shall then have the options to abort/erase the profile, enter further segment data, or save the new profile in the Pressure Profile Library (provided that the profile and all entries satisfy the rules). Dive profiles can be

modified, created and saved but not erased by the operator. System maintenance (by Administrators) functions will be necessary to erase a profile.

The information in these files will be used to program the SCS to control certain chamber functions as desired. The GUI conveniently guides the operator through the data entry process, and will notify the operator in case of inappropriate entries.

3.2.14.7 AUTOMATED OPERATION: The contractor shall provide for an ability to automatically operate the air pressurization system according to each current U.S. Navy Dive Table or profile. The contractor shall also provide an ability to automatically operate any table or pressure profile built in the Profile Builder. The GUI screen shall display progress of the chamber's depth as a function of time along a preset graph of the intended pressure profile. The systems shall have the ability to display any air holds or treatment gas holds on the preset graphs (as they become necessary in treatment). At the close of an air or treatment gas hold, the preset table will pick up where it left off.

3.2.14.8 DATA LOGGING: The contractor shall provide for automated data logging of the events listed below. The data listed shall be capable of being retrieved and saved for review and historical purposes. The logging feature will have a feature that erases the logged data on a periodic basis so that the GUI memory does not overload and affect system performance. This period of memory deletion is to be determined by system optimization. The logged data shall include:

a. Chamber Pressurization Cycle (Left Surface to Reached Surface with maximum depth attained)
b. Chamber Ventilation Rate
c. Chamber Oxygen
d. Chamber Carbon Dioxide
e. Chamber Interior Temperature

3.2.14.9 CONTROL SYSTEM DESIGN: The contractor shall provide a GUI Control System design that includes at a minimum: all control schematics with interlocks, electrical schematics, and logic diagrams necessary to convey the installation and programming of the GUI Control System. The drawings shall meet the applicable paragraphs of this specification. The design phase will include a simulation of system operation.

3.2.14.10 IMPROVED LED CONSOLE INDICATORS AND SWITCHES: The contractor shall replace all of the Control Console LED based indicators and switches. The new indicators and switches shall be an upgraded model over the existing indicators and switches and shall be from the same manufacturer as the GUIs. The contractor is responsible for all wiring and other materials to facilitate the

installation of these indicators and switches. Modification of the Control Console faces may be required to facilitate the new indicators and switches installation. Any and all damage to finish and graphics on the Control Console faces shall be restored to "As New" condition. Installing new Control Console faces for the execution of this issue is acceptable.

3.2.14.11 IMPROVED SHUT IN SWITCHES: The contractor shall replace all of the Control Console shut-in switches. The new shut-in switches shall be an upgraded model over the existing indicators and switches and shall be from the same manufacturer as the GUIs. The contractor is responsible for all wiring and other materials to facilitate the installation of these indicators and switches. Modification of the Control Console faces may be required to facilitate the new indicators and switches installation. Any and all damage to finish and graphics on the Control Console faces shall be restored to "As New" condition.

3.2.14.12 DEPTH TRANSDUCERS AND GAUGES: The contractor shall replace the existing depth transducers and digital gauges for all of the chambers of DSF-2. The new depth transducers shall optimized for working at the new depth range of 0-300 FSW. The new depth transducers shall be "In Kind" to the depth transducers on DSF-1.

3.2.14.13 ENGINEERING WORKSTATION: The contractor shall provide for an Engineering Workstation. The purpose of this workstation is to facilitate easier maintenance of the Supervisory Control System. The Engineering Workstation shall consist of the work console with a PC that allows easier access to the digital working of the GUIs and PLC. The PC shall have the same logins as described for the GUIs. The contractor shall coordinate the location of the new Engineering Workstation in their Preliminary Design Submittal.

3.2.14.14 SUPERVISORY CONTROL SYSTEM OPTIMIZATION: The contractor shall upgrade hardware necessary to improve the performance of Supervisory Control System. The effort will be that all hardware installed on DSF-2 is of the highest current IT standard and currently support by the manufacturer. Upgrades are to include but are not limited to: Ethernet network; power supplies, damaged connections or cables, etc.

3.2.14.15 CONTROL CONSOLE FLEXIBLE TUBING: The contractor shall replace all flexible tubing in the rear of the Control Console. This Tygon and Teflon tubing shall be replaced "In Kind" to the existing tubing.

3.2.14.16 SYSTEM TESTING AND DEMONSTRATION: The contractor shall provide for enough training for the certified operators and maintenance staff at NDSTC to get up on any changes of operations of the SCS. This is not intended to be a comprehensive training course. Training would only be provided for any idiosyncrasies or changes to operations from what is existing.

3.2.15 VIEWPORTS: All viewports shall be replaced; they shall conform to the current ASME PVHO-1 code at time of award of this contract. All Viewports shall conform to material specification L-P-391. The acrylic ports shall be annealed after machining. Each acrylic port shall be subjected to a 365 psig hydrostatic test in accordance with the current version of PVHO-1.

a. O-RING SEALS: O-ring seals shall be fluorocarbon elastomer rubber material conforming to MIL-R-83248.

b. RUBBER: Rubber shall conform to ASTM D2000, durometer 50 through 70, class K, type A, unless otherwise specified.

c. ACRYLIC VIEWPORT SEAT LUBRICANT: Lubricant for acrylic viewport seats O-rings shall be silicone grease that conforms to MIL-S-8860B.

3.2.16 RUNNING PARTS: All running parts of the chamber hull shall be lubricated. Lubricants for carbon steel and stainless steel hinge components, rolling element bearings, and support system pins and pillow blocks shall be grease in accordance with MIL-G-27617 (type 3). Rolling element bearings shall be thoroughly cleaned prior to being packed with this lubricant. All chamber hatch bearings shall be replaced. This type of lubricant shall not be used on aluminum materials. The hatch mounting/un-mounting kit is available upon request for the contractor at NDSTC.

a. **HATCH LUBRICATION:** The contractor shall inspect all the stainless steel zerk fittings and replace any that are not in "as new" condition. All hatch bearings shall be removed and replaced with new hatch bearings. The contractor shall provide and lubricate the hatch bearings and hinge pin cams with halocarbon lubricant.

b. **HATCH AND PASSAGEWAY O-RINGS:** The contractor shall replace all O-rings for each hatch and passageway. This includes: the Outer Lock Entrance/Exit Manway O-ring; the Inner Lock to Outer Lock Manway O-ring; the Inner Lock to Igloo O-ring; the Igloo to Inner Lock Manway O-ring; the Igloo Entrance/Exit Manway O-ring; the Inner Lock to Igloo Passageway D-ring; the Wetpot to Igloo Manway O-ring. All replacement o-rings shall be “in Kind” to the existing O-rings.

3.2.17 DSF-2 HULLS INSPECTION, RE-WELDING, AND CLEANING:

3.2.17.1 INSPECTION AND EXAMINATION: The pressure chambers shall be examined by the contractor in accordance with the provision of this specification. The contractor shall ensure the chamber hull and its attachments meet the requirements of the ASME Boiler and Pressure Vessel Code Section VIII, Division 2 and Section V.

a. **TEST PLAN:** The contractor shall submit a plan including scheduling for ultrasonic thickness measurements, visual inspection, and cleaning. The plan shall include safety

precautions to be used during testing. Ultrasonic thickness measurements and radiographic tests must be done by an experienced independent firm acceptable to the Contracting Officer.

b. **ULTRASONIC THICKNESS TEST:** The contractor shall provide for an ultrasonic thickness measurement check for each DSF #2 pressure chamber. The checks shall be made at the point of tangency and the end heads. The measurements shall be taken at two-inch intervals around the circumference of the head. Measurements shall be taken on a line along the head from the point of tangency across the end of the head to the far point of tangency; measurements shall be taken along a similar line at right angles to the first at the end of the head. Lines of measurements shall be taken at each end of the vessel. The lines shall be so arranged so that the low point, where water may accumulate and corrosion may form is measured.

c. **VISUAL INSPECTION:** The following visual inspection shall be performed by the contractor:

1. A visual inspection shall be performed on all hull welds of the pressure vessel. The inspection shall be in accordance with ASME Section VIII, Division 2.
2. A visual inspection shall be performed on all piping welds in the PCAS system. The inspection shall be in accordance with ANSI/ASME B31.1.

d. **RADIOGRAPHIC TESTS:** No radiographic examination of the DSF shall be required by the contractor except if rejectable flaws are found. Any radiographic tests on DSF-2 shall be at an additional cost to the government.

e. **WELDING PLAN:** If re-welding is required, the contractor shall submit a plan for the re-welding of any PCAS welds found unacceptable during the tests. Any re-welding done on the PCAS shall be performed by an experienced welding contractor acceptable to the Contracting Officer. Accordingly, the welding contractor will be required, continuously during performance, to possess an American Society of Mechanical Engineers Certificate of Authorization for repair of U2 Pressure Vessels, Division 2, and adhere strictly to ASME code requirements during performance. Failure to meet these requirements may be cause for termination for default and in any event will be cause for government rejection of components. Any re-welding required will be at additional cost to the government.

f. **PERSONNEL CLOSURES:** The contractor shall demonstrate that each personnel closure operates properly and freely. Operation of the closure hinges shall be smooth without binding or chattering.

g. **SERVICE LOCK CLOSURES:** The contractor shall demonstrate the operation of the interior and exterior closure of each service lock. Operation of the interior and exterior closure of hinges shall be smooth without binding or chattering.

h. **COMPONENT FAILURE:** Components which fail to meet specifications or are inoperative or erratic in operating shall be removed, repaired, and provided new, as directed by the Contracting Officer, at the contractor's expense.

i. **DAMAGE AND TOUCH-UP:** After completion of the overhaul and testing at the site, the contractor shall touch-up marred paint and repair all damage suffered during the testing and inspection. Painting shall be accomplished as specified in the section C4, entitled, "PAINTING".

j. **METAL CHAMBER SUPPORTS:** A visual inspection of the chamber supports at the site shall be accomplished by the contractor. The chamber foundation shall be inspected to determine if it is cracked and differential settlement occurred. The contractor shall report the findings to the government. Where parts are found fitted improperly as a result of deformation due to facility use, such conditions shall be reported immediately to the Contracting Officer and his approval of the method of correction obtained; the correction shall be made in his presence.

3.2.18 CHAMBER MANWAY/MEDLOCK DOOR REFURBISHMENT: All running parts of the nine (9) Chamber manways/medlock door assemblies shall be lubricated. The lubricant for all carbon steel and stainless steel hinge components, rolling element bearings, and support system pins and pillow blocks shall be a grease in accordance with MIL-G-27617 (type 3)(halocarbon). All hatch bearings shall be removed and replaced with new bearings. All stainless steel Zerk fittings shall be inspected, and any that are not in "as new" condition shall be replaced. Manway/Medlock Door Hinge components shall not be fabricated of aluminum. The contractor shall demonstrate that each manway closure operates properly and freely. Operation of the closure hinges shall be smooth without binding or chattering. The contractor shall inspect and clean the O-ring groove and replace the O-ring in all manways (3 each), and in the medical lock (2 each). These O-rings shall be "in-kind" to the existing O-rings and shall meet the requirements of Section 3.1. The contractor shall adjust the alignment of the manway so that it stays wherever it sets (in the open position, the closed position or anywhere in between. New detents shall be provided for keeping the doors in the closed position. The contractor shall adjust the two medlock doors so that they seal properly.

3.2.19 DECK FASTENERS: The contractor shall replace all deck fasteners with hex-head screws that are "In Kind" to the existing hex-screws on DSF-1.

3.2.20 LED MAINTENANCE LIGHTS REPLACEMENT: The contractor shall replace the existing Light Emitting Diode (LED) lights installed around the panels on the lower deck and the mezzanine level. The replacement lights shall offer improve illumination from the existing models. It is recommended that the new lights utilize the existing transformers. The replacement lights shall provide

50 lumens-per-square-foot of light in the panel areas they illuminate.

3.2.21 GAUGE RING REPLACEMENT: The contractor shall replace up to ten (10) cracked gauge rings at NDSTC. The rings will be "in kind" to the existing rings in accordance with paragraph 1.1.10.

3.2.22 PIPING SYSTEM O-RINGS: All piping & tubing unions associated with the interconnecting piping for the systems refurbished in section 3.2 (including components not refurbished in this overhaul) shall be broken and inspected. All O-rings shall be replaced. The O-rings shall meet the requirements of Section 3.1.

END OF SECTION

SECTION 4

4. PRESSURE VESSEL FOR HUMAN OCCUPANCY (PVHO)

4.1 GENERAL REQUIREMENTS – N/A

4.2 SPECIFIC TO CONTRACT

4.2.1 REPAINTING OF WETPOT INTERIOR: The contractor shall completely repaint the interior of the Wetpot only.

4.2.2 PAINTING PLANS: All painting plans must be submitted by the contractor and approved by the Contracting Officer.

4.2.3 PAINTING MATERIALS: Paint shall be Carboline 890H. Paints shall be delivered in original factory containers that plainly show the designated name, specification number, batch number, color, date of manufacture, manufacturer's directions, and name of manufacturer, all of which shall be legible at the time of use. Paint materials shall conform to the contract specifications. All painting materials for the interiors of the pressure vessel assembly chambers, except as specified otherwise for the viewport bearing surfaces, shall be the products of Carboline.

4.2.4 SURFACE PREPARATION: Threaded hardware, stainless steel surfaces such as hatch handle and viewport retaining rings, hatch sealing surfaces, entire stainless steel and monel penetration surfaces, and viewport penetrations shall be masked or otherwise protected prior to surface preparation and coating operations. Following completion of painting, masking or protective materials shall be removed and metal surfaces cleaned as required.

4.2.5 VIEWPORT PENETRATIONS: The viewport penetrations shall be thoroughly cleaned and repainted with zinc oxide, or another acceptable corrosion protecting coating acceptable to the Contracting Officer.

4.2.6 SURFACE PREPARATION:

4.2.6.1 WETPOT INTERIOR SURFACES: The entire wetpot interior surface shall be abrasive blasted or mechanical centrifugally blasted to have surface preparation in accordance with the paint manufacturer’s recommendations. Prepared surfaces shall be cleaned by wire brushing or other manual or mechanical means for removal of loose scale, rust, dirt, and other deleterious substances. Personnel performing abrasive blasting shall conform to the paragraph entitled “SAFETY” below.

4.2.6.2 SHOT DISPOSAL: The Contractor is responsible for proper disposal of all abrasive blasting materials IAW all base, state and federal HAZMAT requirements.

4.2.7 PAINT APPLICATION: After being sandblasted, all interior and exterior surfaces of the Outer Lock and Inner Lock, including

personnel and service lock closures shall be painted with the following system:

Number of Coats	Material	Apply by	Thickness Dry Mils	Total Time
2	Carboline 890H Primer - Gray	spray	8	16 hrs
2	Carboline 890H Finish White	spray	8	48-72 hrs
Total Dry film thickness:			32	

4.2.8 PAINT INSPECTION:

4.2.8.1 WETPOT INTERIOR SURFACE INSPECTION: After the prime coat has dried for the specified time, wetpot interior surfaces of the chamber shall be thoroughly checked for porosities. Porosities shall be marked and patched with primer. Phenoline 300 orange, with Special Mica filler or the manufacturer’s updated product, shall be used to patch porosities on metal surfaces. Putty knives or small trowels shall be used to push the material into voids and a brush dipped in Carboline Cleaner No. 2 shall be passed over the patches to smooth their surface.

4.2.8.2 WETPOT INTERIORS: The finished surfaces of all chamber interiors and exteriors shall be free from runs, sags, and variations in color, texture, and finish. All surfaces including edges, corners, crevices, welds, and fasteners shall receive a uniform film thickness equivalent to adjacent painted surfaces. Each coat shall be inspected during and immediately after application for wet film thickness, pinholes, runs, and sags. The film thickness shall conform to the specifications. Pinholes, runs, sags on the painted surfaces shall be repaired immediately while the paint is still wet, by removing the paint in the affected area and reapplying the coat. Pinholes which appear after the last coat has been applied must be filled properly. Each coat shall be dry and hard before application of the next coat and all paint work shall be subject to inspection at any time to ensure strict compliance with the specifications.

4.2.8.3 DAMAGE REPAIR: Surfaces damaged by the contractor during overhaul shall be refurbished to "as new" condition at the contractor's cost.

4.2.9 SAFETY: In all buildings and areas where painting, as called out in this specification is accomplished, the contractor shall take special precautions to see that proper ventilation is provided. Continuous forced-air circulation must be provided during coating application. In confined areas, workmen must wear air-line respirators with a source of low-pressure fresh air and precautions shall be taken to provide eye protection for the workmen when spraying overhead. No

painting shall be done adjacent to any fire hazard such as welding or open flame.

4.2.10 IGLOO, INNER LOCK AND OUTER LOCK TOUCH UP PAINTING: The contractor shall provide spot painting of areas of corrosion in the interiors of the chambers. All painted surfaces are to be in “as new” condition. The contractor shall remove all necessary piping and components from the interior of the chamber that prevent prep and painting of the corroded areas. The paint to be applied shall be Bright White Carboguard 890H. Paints shall be delivered in original factory containers that plainly show the designated name, specification number, batch number, color, date of manufacture, manufacturer's directions, all of which shall be legible at the time of use. Applicable threaded hardware, stainless steel surfaces such as hatch handle and viewport retaining rings, hatch sealing surfaces, entire stainless steel and penetration surfaces, and viewport penetrations shall be masked or otherwise protected prior to surface preparation and coating operations (if needed). Following completion of painting, masking or protective materials shall be removed and metal surfaces cleaned as required. The interior surfaces shall be "surface prepared" for painting in accordance with SSPC SP-7. Surfaces shall be "roughed" and cleaned in a manner to assure proper adherence of surface to existing paint. The final Dry Film Thickness to be applied shall be a minimum of 8 mils. The finished surfaces of the chamber interior shall be free from runs, sags, and variations in color, texture, and finish. All surfaces including edges, corners, crevices, welds, and fasteners shall receive a film thickness equivalent to adjacent painted surfaces. OSHA Safety Data Sheets shall be provided for the paint system to be utilized as well as all solvents or thinners used in the preparation and clean-up of the surfaces or mixing of the paints. The contractor shall take special precautions to see that proper ventilation is provided during painting. Continuous forced-air circulation must be provided during coating application. Precautions shall be taken to provide eye protection for the workmen. No painting shall be done adjacent to any fire hazard such as welding or open flame. Surfaces damaged by the contractor during overhaul shall be refurbished to "as new" condition at the contractor's cost. The contractor is responsible for any spills, drips, or any other marring of the surrounding area done by the prep and painting of the interior chamber hull.

END OF SECTION

SECTION 5

5. QUALITY ASSURANCE

5.1 GENERAL REQUIREMENTS:

5.1.1 All work performed shall be in accordance with and to the standards and specifications cited in each section. Any changes in design or deviation from accepted standards must be documented and submitted to the government prior to change or implementation.

5.1.2 **DESIGN REVIEW MEETINGS:** Design and fabrication review meetings shall be held by the contractor at the contractor's facility or the installation site, at time intervals no greater than six weeks. Two weeks advance written notice shall be furnished to the government prior to each meeting.

5.1.3 **CONTRACT ADHERENCE:** The contractor shall rigidly adhere to the requirements for qualification, certification, test, examination and inspection required by the various contract documents.

5.1.4 **SUBCONTRACTORS:** Subcontractors shall be monitored by the contractor to assure timely and adequate performance and adherence to approved specifications. Copies of all certifications/qualifications required for the subcontractor to perform their work shall be submitted by the contractor to the government.

5.1.5 **SUBMISSION NUMBER:** All submissions and submittals required by this contract shall include one (1) original and three (3) copies of the submission.

5.1.6 **DISK COPIES:** Systems manuals shall be prepared using a commercially available word processing program. All drawings shall be prepared on a commercially available computer aided design program. The Valve & Component Database shall be prepared on a commercially available spreadsheet design program. All submissions (Preliminary Design, Final Design, and As-Built) of systems manuals, drawings, and Valve & Component Database shall include CD copies of the system manuals, drawings, and Valve & Component Database formatted for MS Excel. Final disk submission of systems manuals, drawings, and Valve & Component Database shall be marked "As built". Final disk submissions of drawings shall include all the names of all contractor signatures present, and the date of signature. Complete files must be in current NMCI/NGEN computer program product format such as MS Word 2010, MS Excel 2010, Portable Document Format (PDF) Version 10, AutoCAD 2010 (minimum). All drawings shall be provided in AutoCAD format. The contractor shall provide a minimum of two (2) copies of all CD's. **In addition, the contractor shall scan the entire accepted as built submittal in portable document format (pdf) and submit two (2) CD's to NAVFAC EXWC and five (5) CD's to the end user.**

5.1.7 NOTIFICATION OF TESTING: The contractor shall provide the government with written notification of all on site testing. This notification shall be received by the government a minimum of 30 working days prior to the date of the test.

5.1.8 CONTRACTOR'S RECORDS AND DOCUMENTS: The contractor shall submit copies of all records and documents required by this contract and the codes and specifications cited herein. One original and three copies shall be submitted.

5.1.9 PIECEMEAL SUBMITTAL: Piecemeal submittal of any submittals required by this specification is unacceptable, and such submittals will be returned without review.

5.1.10 QUALITY CONTROL PLAN: The contractor's Quality Control Plan shall be in accordance with International Organization for Standardization (**ISO 9000)**, and with any further quality requirements specified in the contract. A description of the organization that will fulfill the quality program requirements with a definition of the responsibility and authority of each functional element, shall be included. All of the contractor's documented policies or procedures which implement the quality program shall be identified in appropriate places with the plan. A short summary of the objective or purpose of each procedure shall be given. The plan must delineate, by flow chart or similar technique, where inspection, audit and other controls are to be applied to assure conformance with the contract quality requirements and must identify each assembly, process and inspection instructions applicable to the contract hardware and show where it is to be applied. The plan shall describe the method by which the plan will be applied to sub-contractors.

5.1.11 PRELIMINARY DESIGN PACKAGE: Documents in this package shall be of sufficient detail to demonstrate that the contractor's plan for the work described in this contract is in conformance with this contract as well as demonstrating the technical and functional feasibility of the contractor's plan. All elements of the design shall be in strict conformance with the hyperbaric facility code requirements as stated in paragraph 1.2.8. It shall clearly indicate where equipment, components and piping runs are intended to be located. Pragmatic issues of installation and maintenance shall be addressed. During development of the Preliminary Design, the contractor is responsible for visiting the site to facilitate layout of work. Drawings shall be in accordance with ASME Y14.100M. Drawings shall be 17" x 22", LEVEL 2 drawings. The government will respond to the Preliminary Design submittal within 30 days of receipt. The preliminary package shall consist of the following applicable items, as a minimum.

a. General Arrangement Drawings.
b. System piping and electrical schematics.
c. Calculations.
d. Proposed Material and Manufacturing Specifications and qualifications.
e. Preliminary Component Manufacturer's Design Data.

f. Subcontractors Identification, Qualifications, and Certifications.
g. Hyperbaric Systems Manual Outline.
h. Component and Panel ID tags.
i. Test Plans
j. Welding Qualifications and Procedures
k. Cleaning Qualifications and Procedures
l. Painting Plan
m. Non-destructive Testing Plan and Qualifications

5.1.12 DRAWING PACKAGE: The drawing package shall be configured, and contain the elements, as described in the current version of NDSTC PD-2-2. A copy of PD-2-2 will be provided to the contractor upon request.

5.1.13 RECORD DRAWINGS AND DOCUMENTATION: The contents shall show the work as it was actually performed. The drawings shall be 17" X 22", or as designated herein or a drawing size acceptable to the COR. It shall consist of:

a. Engineering Drawings of an "As Built" condition.

b. A serialized group of all component catalogues that are delivered with the components. They usually contain operation, maintenance, exploded view, replacement part numbers, etc.

c. Weld Maps and Joint Identifications.

d. Torque Values: The contractor shall include all required torque values as embedded data on the piping schematics.

5.1.14 COMPONENT MANUFACTURER'S DESIGN DATA: The contractor shall provide the Component Manufacturer's Design Data (CMDD) for all components provided as part of this contract. The CMDD shall be provided in one completely marked and coordinated package sufficient to assure full compliance with the specification requirements. Submittals for each manufactured product shall include, but not be limited to the following: Manufacturer's descriptive literature and catalog cuts, manufacturer's operation and maintenance manual **(2 Copies)**, equipment drawings, diagrams, performance and characteristic curves, catalog model or number, nameplate data, size, layout dimensions, capacity, specification reference, component tag number, and find number from valve and component list/drawings.

5.1.15 SYSTEMS MANUAL: The contractor shall update the existing Systems Manuals. The contractor is responsible for providing updates for all applicable sections for systems provided under this contract. The manuals consist of the following:

a. General Facility Description:
b. System Certification:
c. There shall be a section addressing each of the Hyperbaric Systems. The following data shall be provided by the contractor for each system:

1. System Operational Capabilities, Limitations and Set Points.
2. System Narrative Description.
3. System Piping and Electrical Schematics.
4. System Operating Instructions.
5. System Maintenance Instructions.
6. System Design Computations.
7. System Spare Parts Data.
8. Component List.
9. System Functional Test.

5.1.16 CONTRACTOR'S RECORDS AND DOCUMENTS: Contractors records and documents shall include all records and documents required by Section 1 and 3. These shall include, but are not limited to:

a. Test reports
b. Inspection reports
c. Test plans
d. Travelers/route sheets
e. Mill certs/material reports
f. Procedures
g. Qualifications
h. Records
i. Working drawings
j. Radiographs
k. Shop Drawings

5.1.17 VALVE & COMPONENT DATABASE: The Valve & Component Database provides design, procurement and manufacturer's data about the components. The database requirement shall be met by the use of MS Excel in the format shown in Section 6 Figure 1. The database fields (columns) shall include: system information, logistical information, and maintenance information.

5.1.18 FUNCTIONAL TEST PLAN: The contractor shall submit a functional test plan for the complete test of all hardware provided as part of this specification. The functional test plan shall include valve line up, functional testing procedures, pass/fail criteria and shut down of the system being tested. There shall be initial blocks for all steps of the functional test plan. There shall be final signature blocks for both the contractor's completion and the government's witnessing of successful functional test. The plan will provide information as to all equipment needed for testing and the calibration information for that equipment. The test plan shall contain, as a minimum, the following data:

a. Test purpose/objectives.
b. Identify each assembly to be tested.
c. Describe test set up at each level of test, including diagrams and sketches to illustrate the test set-up.
d. Describe or identify all test equipment required. Calibration of test equipment.
e. Describe all test procedures, including test sequence, test parameters, participants, and pass/fail criteria.
f. Provide sample test data sheets to illustrate test data to be documented and delivered at each level of test.

g. Establish criteria for acceptance at each level of test and describe the procedures to be followed in the event of malfunction or failure.
h. Identify critical or unusual tests or test conditions.
i. Overall test schedule.

5.1.19 SYSTEM FUNCTIONAL TEST: The contractor shall be required to demonstrate by testing that all piping, instrumentation and systems are capable of meeting all the criteria contained in this specification. The functional test shall not be conducted until all other required testing has been completed, gas analysis reports have been received, and final, as built drawings have been submitted to the government. The contractor shall prepare a test plan and a test report.

5.1.20 PROJECT SCHEDULE: The contractor shall prepare a contract progress schedule that clearly defines the tasks necessary to accomplish the work. The schedule shall be a GANTT chart, CPM chart or "ROADMAP". The schedule shall be composed of defined and documented Milestones and Tasks (M&T). Milestones are defined as having no time duration; whereas, Tasks have time duration. The schedule shall show the order and interdependence of M&T and the sequence of M&T execution necessary to complete the contract. The schedule shall show the M&T that comprise the critical path. It shall show the float for those M&T not on the critical path. Procurement and subcontracting tasks may cite total individual procurement or subcontract cost. Copies of M&T documents whose work was completed during a monthly period shall be submitted with the monthly progress report for that period. The M&T documents shall be signed by the contractor to indicate certified completion of the Task. The monthly update of the contract schedule shall contain the date of effect of that update and a list of the revision dates of the schedule. The following shall be included in the schedule as either milestones or tasks, as a minimum, in addition to others necessary to describe the work:

a. Work Tasks.
b. Contractual execution date requirements milestones.
c. Government furnished information and/or equipment milestones.
d. Contractual submittal date requirements milestones.
e. Procurement activities including major equipment tasks.
f. Subcontract activities tasks.
g. Quality Control checks.

5.1.21 MONTHLY REPORT: The contractor shall provide a monthly report, which shall include an update of the Project Schedule and Valve & Component Database. The revised documents shall reflect any changes occurring since the last updating. It shall also include a current Progress Report containing a summary of all work performed and any problems and their solutions encountered during the reporting period. The report shall include statements of the overall status of the project. This report shall be sent electronically in its entirety to the COR.

5.1.22 PURCHASE ORDERS: The contractor shall submit all purchase orders for all material purchased. The contractor shall prepare

a database or table which cross-references data such as purchase order number, find number (if applicable), and any other pertinent information such as heat numbers. The purchase orders shall be kept in a separate three-ring binder (or binders). Each purchase order (and its applicable data) shall be separated by its own individual tab.

5.1.23 FACILITY FUNCTIONAL TEST: The contractor shall be required to demonstrate by testing that all piping, instrumentation, machinery, and systems meet the following criteria:

a. Are hazard free.
b. Are in accordance with applicable Codes and Standards.

5.2 ADDITIONAL DRAWING REQUIREMENTS: The contractor shall provide the following updates to original DSF-2 drawings in accordance with NDSTC PD-2.

a. **ELECTRICAL SCHEMATICS**: The contractor shall redraw the existing electrical schematics for DSF-2. The new drawings shall meet the requirements of PD-2-2. The electrical schematic shall be updated for all systems.

b. **PIPING SCHEMATICS**: The contractor shall redraw the existing piping schematics for all piping system within DSF-2.

c. **SYSTEMS LOGIC DIAGRAMS**: The contractor shall update the basic logic diagrams for each the following system of DSF-2:

1. SUPERVISORY CONTROL SYSTEM
2. BUILT IN BREATHING SYSTEM
3. DIVERS BREATHING SYSTEM
4. FIRE EXTINGUISHING SYSTEM
5. WETPOT FILL AND DRAIN

END OF SECTION

SECTION 6

CONCEPT OF OPERATIONS

1.1 Human-Machine Interface

The SCS primary human-machine interface is the Graphic User Interface (GUI) which consists of a touch-screen monitor with multiple screens configured to operate the DSF-1 hyperbaric facility in all automated modes. Additional human-machine interface components are the mechanical switches and lighted indicators which provide for the operation and monitoring of automated systems in conjunction with and independently of the GUI.

1.1.1 Console Switches/Indicators

Mechanical switches provide redundant, direct control of BIBS and DBS field devices and for the selection of "Manual" mode through the PLC. These systems may also be operated via screens provided on the GUI (see paragraph 2.1.2). The FES console switches are the only control for FES field devices, no operator screens are provided on the GUI. The Wetpot Fill and Drain system console switches are the only control for WFDS field devices. The WFDS is further protected by using a keyed lock-out switch. The WFDS can be accessed and operated without logging on to the automated system through the GUI.

1.1.2 Graphic User Interface (GUI)

The ability to access the GUI will be limited and controlled by the system administrator. The system administrator will assign operators and their level of access. Access must be controlled to ensure integrity of Scope of Certification set points/controls. Access levels are defined as;

Level 1 System Observer

Level 2 System Operator (wetpot fill & drain system only)

Level 3 System Operator (PLC controlled automated systems)

Level 4 System Maintenance Technician

Level 5 System Manager

Table 1-1 Supervisory Control System Capabilities

Assigned Personnel	Password Required	Access Level	Depth Limit	Ascent Rate	Descent Rate	Systems Access
Manager*	Yes	5	300 FSW	Max System Capability	Max System Capability	All
Maintenance Technician*	Yes	4	300 FSW	Max System Capability	Max System Capability	All
Operator (log-on access)	Yes	3	300 FSW	30 FPM	75 FPM	All
Operator/Maintenance Technician (no log-on required, access controlled by keyed switch)	No	2	N/A	N/A	N/A	Wetpot Fill & Drain Only
Observer	No	1	N/A	N/A	N/A	Limited to Monitor Only. This Log-On does not allow operation of any system.

*** This log-on allows access to edit set-points.**

SYSTEM DESCRIPTION

2.1 General

The SCS provides for the control and monitoring of assigned system mechanical field devices via programmable logic controllers, interactive computer graphics & mechanical switches.

The SCS consists of the HMI components of each individual sub-system of the DSF. The Control Console is divided into Operating Stations (OS) and Standby Operating Stations (SOS).

Console mechanical switches & pilot lights are provided with distinctively different shapes to allow for easy identification of informational indication or a lighted switch which requires operator action. Informational indications are provided by round pilot lights and switches which control field devices are rectangular.

2.2 Operating Station (OS)

Each OS consists of mechanical controls for primary means of operation of the DSF-1 systems.

The Console Operating Stations are configured as follows;

Outer Lock	Bays 1 & 2	(Figure 3-1)
Inner Lock	Bays 3 & 4	(Figure 3-2)
Igloo	Bays 7 & 8	(Figure 3-3)
Wetpot	Bays 9 & 10	(Figure 3-4)

2.2.1 Operating Station SCS Controls & Displays

2.2.1.1 Outer Lock OS

Bay 1 provides;
Visual indication of the FES Hand-Held Hose Tank and Outer Lock Deluge Tank water level by means of colored pilot lights (refer to the DSF1 FES Manual for detailed description/function),

Functional Control of the FES Hand-Held Hose system and the FES Outer Lock Deluge System,

Shut-In and Shut-In Release control of the Outer Lock,

The ability to shift the Supervisory Control of the Outer Lock to Manual,

Audible FES alarm indication.

Bay 2 provides;
Human-machine interface through the GUI.

2.2.1.2 Inner Lock OS

Bay 3 provides;
Visual indication of the FES Inner Lock Deluge Tank water level by means of colored pilot lights (refer to the DSF-1 FES Manual for detailed description/function),

Functional Control of the FES Hand-Held Hose system and the FES Inner Lock Deluge System,

Shut-In and Shut-In Release control of the Inner Lock,

The ability to shift the Supervisory Control of the Inner Lock to Manual,

Audible FES alarm indication,

FES Air Reduction Panel air supply selection switch (primary/standby),

Functional control of the BIBS automated valves,

Console Main Power On/Off control (lower section).

Bay 4 provides;
Human-machine interface through the GUI.

2.2.1.3 Igloo OS

Bay 7 provides;
Visual indication of the FES Igloo Deluge Tank water level by means of colored pilot lights (refer to the DSF-1 FES Manual for detailed description/function),

Functional Control of the FES Hand-Held Hose system and the FES Igloo Deluge System,

Shut-In and Shut-In Release control of the Igloo,

The ability to shift the Supervisory Control of the Igloo to Manual,

Audible FES alarm indication,

Functional control of the BIBS automated valves,

Bay 8 provides;
Human-machine interface through the GUI.

2.2.1.4 Wetpot OS

Bay 9 provides;
Shut-In and Shut-In Release control of the Wetpot,

The ability to shift the Supervisory Control of the Wetpot to Manual,

Functional control of the DBS automated valves,

Functional Control of the WFDS automated Fill, Drain and Recirculation valves (this system is not controlled by the SC, refer to the Wetpot Fill and Drain System Manual for details).

Bay 10 provides;
Human-machine interface through the GUI.

2.3 Standby Operating Station (SOS)

Each SOS consists of mechanical controls for standby (back-up) means of operation of the DSF-1 systems.

The Console Standby Operating Stations are configured as follows;

Outer Lock & Inner Lock	Bay 5 (Figure 3-5)
Igloo & Wetpot	Bay 6 (Figure 3-6)

2.3.1 Standby Operating Station SCS Controls & Displays

2.3.1.1 Outer Lock SOS

Bay 5 provides;
Functional Control of the FES Hand-Held Hose system and the FES Outer Lock Deluge System,

Shut-In and Shut-In Release control of the Outer Lock,

Visual digital display of Outer Lock depth.

Human-machine interface through the GUI.

2.3.1.2 Inner Lock SOS

Bay 5 provides;
Functional Control of the FES Hand-Held Hose system and the FES Inner Lock Deluge System,

Shut-In and Shut-In Release control of the Inner Lock,

Functional control of the BIBS automated valves,

Visual digital display of Outer Lock depth,

Human-machine interface through the GUI.

2.4 Supervisory Control System Hardware

2.4.1 PLC Controller Cabinet

The PLC Controller Cabinet houses the following equipment;
Power Supply
Processor
ControlNet Module

EtherNet Module
Redundancy Module
Redundant DC Power

2.4.2 PLC Panel-1 (Rear of Bays 1-4)

Power
Bridge Module
EtherNet Switch
Digital Input Cards
Digital Output Cards

2.4.3 PLC Panel-2 (Rear of Bays 7-10)

Power
Bridge Module
EtherNet Switch
Digital Input Cards
Digital Output Cards

2.4.4 PanelView [referred to as Graphic User Interface (GUI) aka Human-Machine Interface (HMI)]

Proface, Xycom, touch-screen monitor with keyboard and mouse. Each GUI is provided with a USB port for keyboard control and for down-loading data to/from system files.

2.5 Supervisory Control System Operating System

Microsoft Windows XP Professional.

2.6 Supervisory Control System Wiring

3.6.1 Informational wiring (signal I/O only) meets NEC Code, article 725-27.

2.7 Supervisory Control System Logic

Rockwell Automation RSLogix 5000, Ladder Logic, or other system logic accepted by the COR.

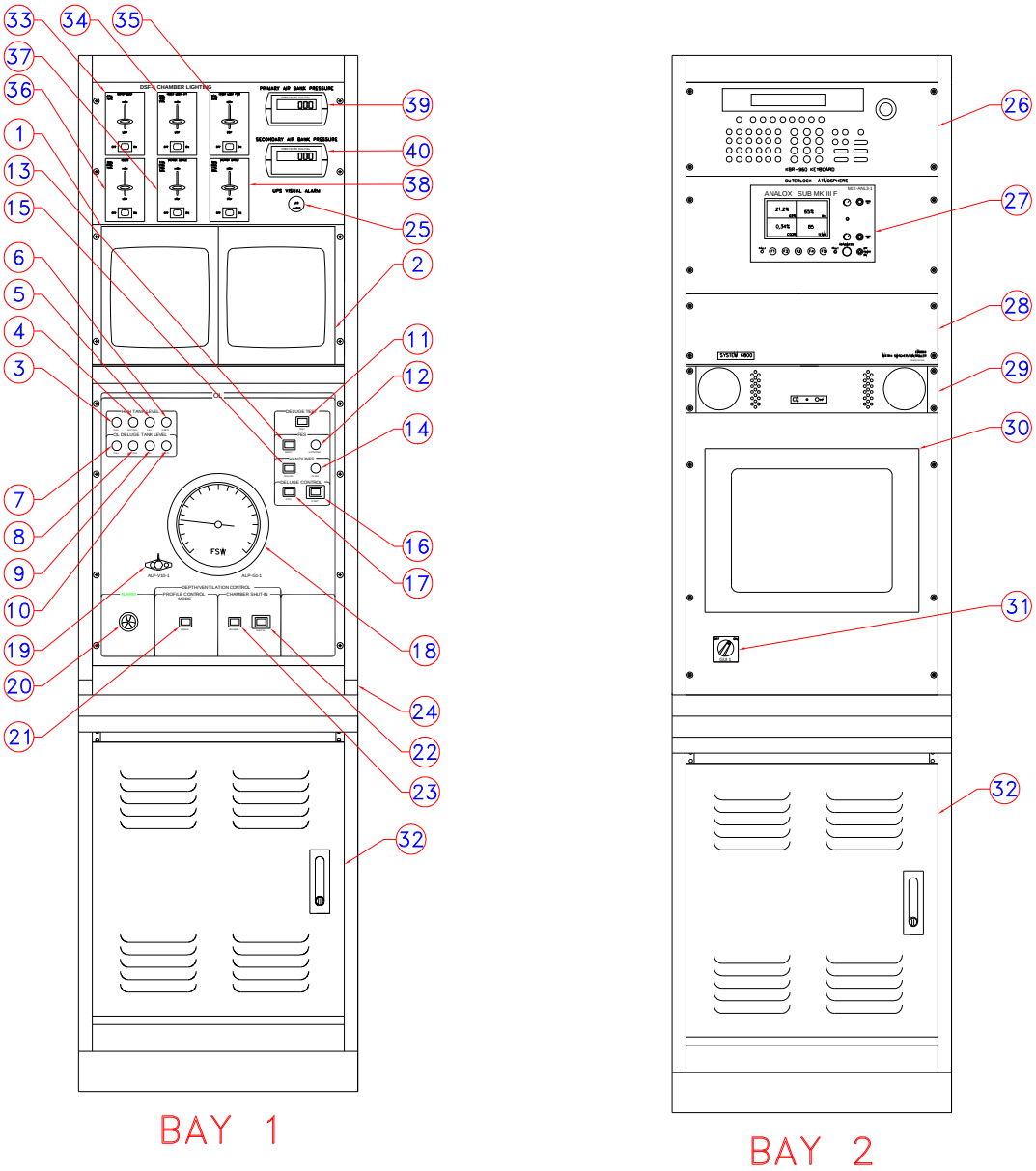

Figure 2-1 Outer Lock Operating Station, Bay 1 and Bay 2

Figure 2-1 Outer Lock Operating Station Legend

ITEM	DESCRIPTION
1	Outer Lock External Camera Monitor
2	Outer Lock Internal Camera Monitor
3	FES Hand-Held Hose Reservoir Full Indicator Lamp (Green)
4	FES Hand-Held Hose Reservoir Not Full Indicator Lamp (Yellow)
5	FES Hand-Held Hose Reservoir Fill Indicator Lamp (Yellow)
6	FES Hand-Held Hose Reservoir Empty Indicator Lamp (Red)
7	Outer Lock FES Deluge Reservoir Full Indicator Lamp (Green)
8	Outer Lock FES Deluge Reservoir Not Full Indicator Lamp (Yellow)
9	Outer Lock FES Deluge Reservoir Fill Indicator Lamp (Yellow)
10	Outer Lock FES Deluge Reservoir Empty Indicator Lamp (Red)
11	Outer Lock FES Deluge Test Button (Yellow)
12	Outer Lock FES Deluge Activated Indication Lamp (Red)
13	Outer Lock FES Reset Button (Yellow)
14	FES Hand-Lines In Use Indicator Lamp (Red)
15	FES Hand-Lines Isolate Button (Yellow)
16	Outer Lock Deluge Start Button (Red) w/Flip-Up Cover
17	Outer Lock Deluge Stop button (Yellow)
18	Outer Lock Dial Depth Gage
19	Outer Lock Dial Depth Gage Calibration Valve
20	FES Audible Alarm (Outer Lock Deluge & Hand-Lines)
21	Outer Lock Supervisory Control Manual Button (White)
22	Outer Lock Shut-In Button (White) w/Flip-Up Cover
23	Outer Lock Shut-In Release Button (White)
24	Outer Lock GUI #1 USB Port (side turret panel)
25	UPS Visual Alarm
26	Diver Monitoring System Keyboard
27	Outer Lock Atmosphere Monitor
28	Diver Monitoring System Matrix Switcher
29	Outer Lock GUI Speaker
30	Outer Lock GUI #1
31	Outer Lock GUI On/Off Switch
32	Storage
33	Outer Lock Canty Light Dimmer Switch
34	Inner Lock AFT Canty Light Dimmer Switch
35	Inner Lock FWD Canty Light Dimmer Switch
36	Igloo Canty Light Dimmer Switch
37	Wetpot Lower Canty Light Dimmer Switch
38	Wetpot Upper Canty Light Dimmer Switch
39	BIBS Primary Bank Pressure Digital Gauge
40	BIBS Secondary Bank Pressure Digital Gauge

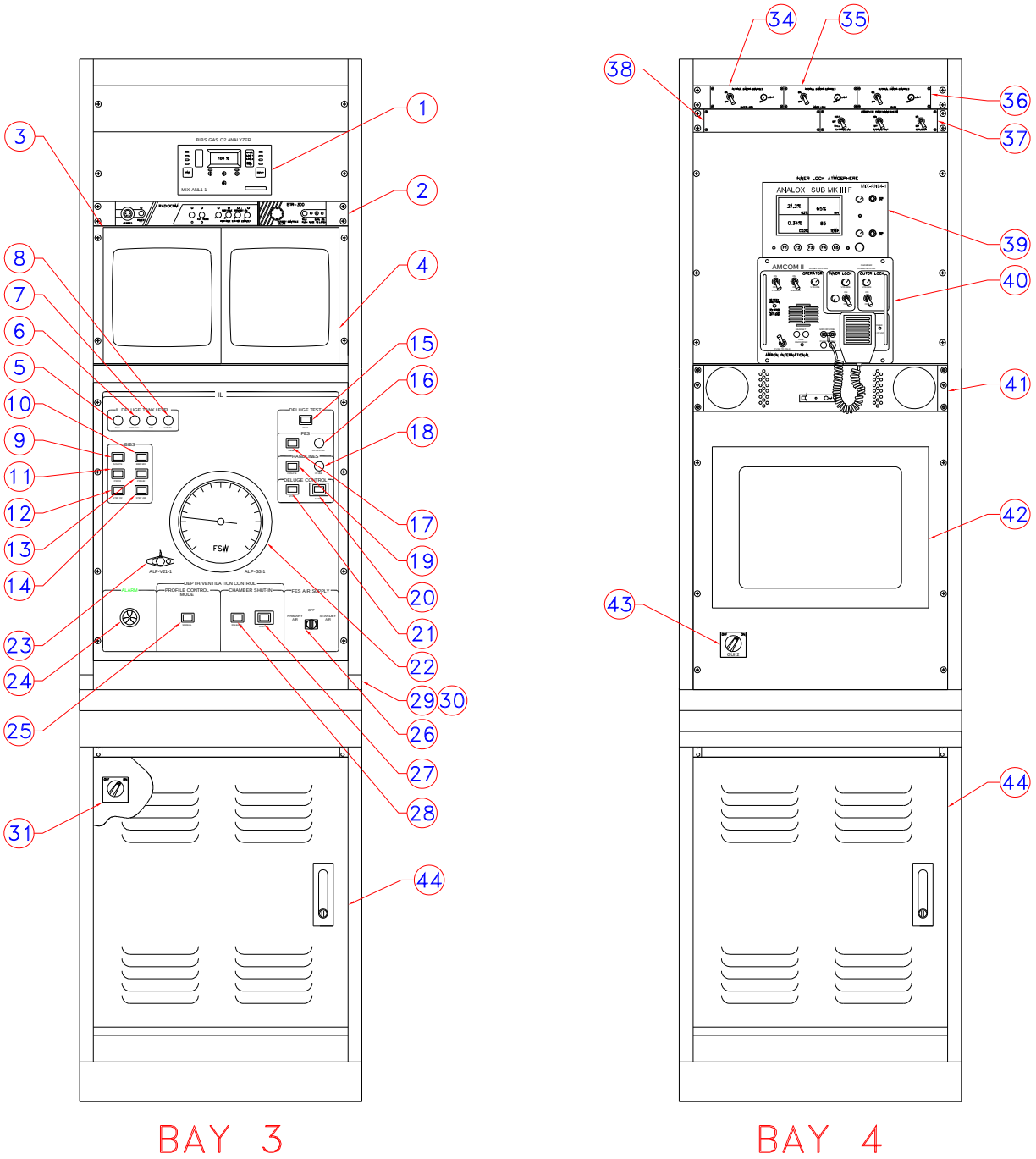

Figure 2-2 Inner Lock Operating Station, Bay 3 and Bay 4

Figure 2-2 Inner Lock Operating Station Legend

ITEM	DESCRIPTION
1	BIBS Oxygen/Mixed Gas Supply Oxygen Analyzer
2	Station 1 Wireless Communications Base Station
3	Inner Lock External Camera Monitor
4	Inner Lock Internal Camera Monitor
5	Inner Lock FES Deluge Reservoir Full Indicator Lamp (Green)
6	Inner Lock FES Deluge Reservoir Not Full Indicator Lamp (Yellow)
7	Inner Lock FES Deluge Reservoir Fill Indicator Lamp (Yellow)
8	Inner Lock FES Deluge Reservoir Empty Indicator Lamp (Red)
9	BIBS Isolate Button (Red)
10	BIBS Mixed Gas Supply Button (Orange)
11	BIBS Primary O2 Supply Button (Green)
12	BIBS Standby Supply Button (Green)
13	BIBS Primary Air Button (White)
14	BIBS Standby Air Button (White)
15	Inner Lock FES Deluge Test Button (Yellow)
16	Inner Lock FES Deluge Activated Indication Lamp (Red)
17	Inner Lock FES Reset Button (Yellow)
18	FES Hand-Lines In Use Indicator Lamp (Red)
19	FES Hand-Lines Isolate Button (Yellow)
20	Inner Lock Deluge Start Button (Red) w/Flip-Up Cover
21	Inner Lock Deluge Stop button (Yellow)
22	Inner Lock Dial Depth Gage
23	Inner Lock Dial Depth Gage Calibration Valve
24	FES Audible Alarm (Inner Lock Deluge & Hand-Lines)
25	Inner Lock Supervisory Control Manual Button (White)
26	FES Primary/Standby Air Supply Selection Switch
27	Inner Lock Shut-In Button (White) w/Flip-Up Cover
28	Inner Lock Shut-In Release Button (White)
29	Inner Lock GUI #2 USB Port (side turret panel)
30	Outer/Inner Lock SOS GUI #3 USB Port (side turret panel)
31	Supervisory Control Console Main Power On/Off Switch
32	Not Used
33	Not Used
34	Outer Lock Internal Camera Control Panel
35	Inner Lock Internal Camera Control Panel
36	Igloo Lock Internal Camera Control Panel
37	Atmosphere Conditioning System Control Panel
38	Spare Panel
39	Inner Lock Atmosphere Monitor
40	Outer/Inner Lock Primary Communications
41	Inner Lock GUI Speaker
42	Inner Lock GUI #2
43	Inner Lock GUI On/Off Switch
44	Printer (inside on slide-out shelf)

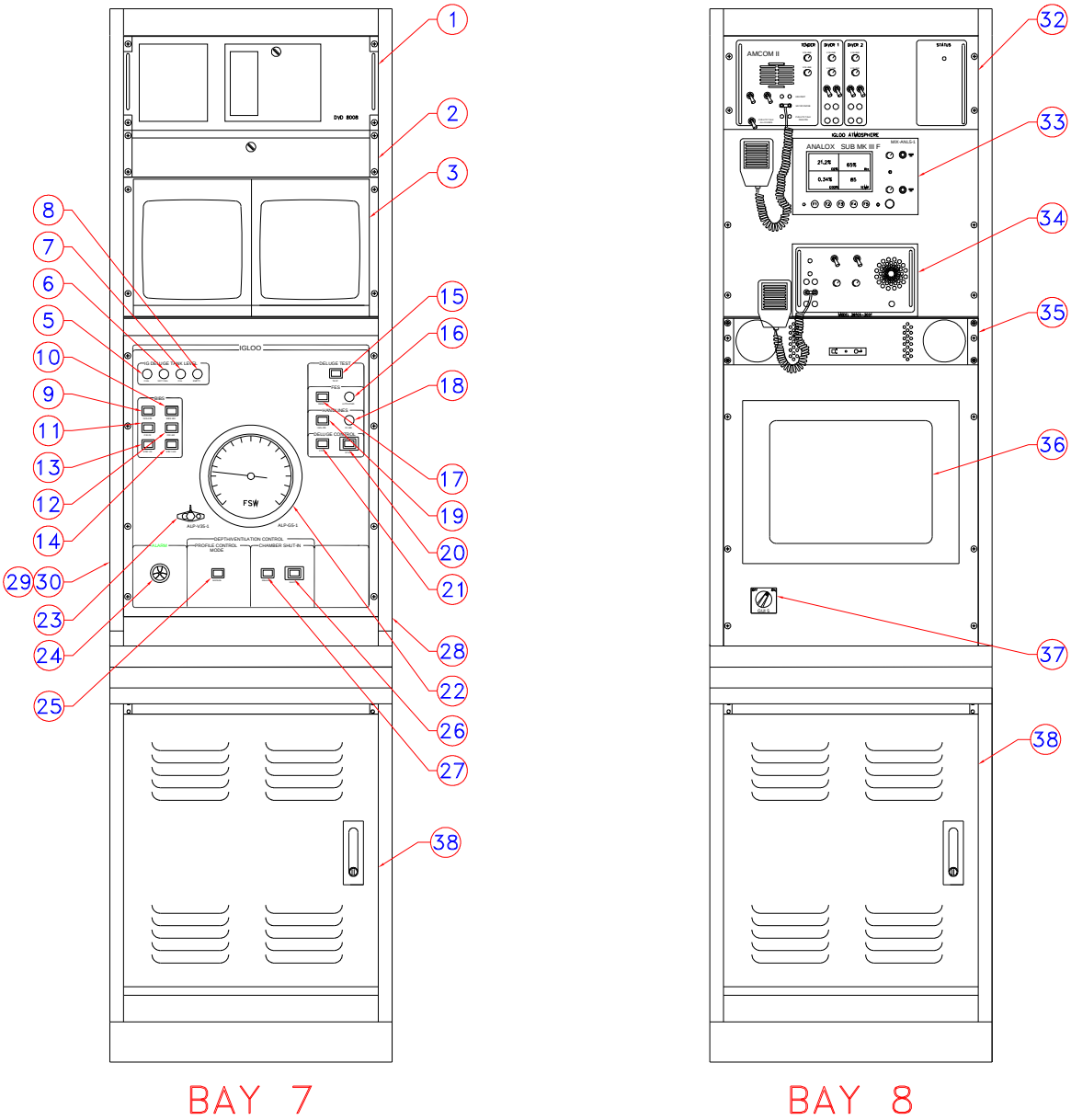

Figure 2-3 Igloo Operating Station, Bay 7 and Bay 8

Figure 2-3 Igloo Operating Station Legend

ITEM	DESCRIPTION
1	Digital Video Recorder (DVR)
2	Utility Drawer
3	Igloo External Camera Monitor
4	Igloo Internal Camera Monitor
5	Igloo FES Deluge Reservoir Full Indicator Lamp (Green)
6	Igloo FES Deluge Reservoir Not Full Indicator Lamp (Yellow)
7	Igloo FES Deluge Reservoir Fill Indicator Lamp (Yellow)
8	Igloo FES Deluge Reservoir Empty Indicator Lamp (Red)
9	BIBS Isolate Button (Red)
10	BIBS Mixed Gas Supply Button (Orange)
11	BIBS Primary O2 Supply Button (Green)
12	BIBS Standby Supply Button (Green)
13	BIBS Primary Air Button (White)
14	BIBS Standby Air Button (White)
15	Igloo FES Deluge Test Button (Yellow)
16	Igloo FES Deluge Activated Indication Lamp (Red)
17	Igloo FES Reset Button (Yellow)
18	FES Hand-Lines In Use Indicator Lamp (Red)
19	FES Hand-Lines Isolate Button (Yellow)
20	Igloo Deluge Start Button (Red) w/Flip-Up Cover
21	Igloo Deluge Stop button (Yellow)
22	Igloo Dial Depth Gage
23	Igloo Dial Depth Gage Calibration Valve
24	FES Audible Alarm (Inner Lock Deluge & Hand-Lines)
25	Igloo Supervisory Control Manual Button (White)
26	Igloo Shut-In Button (White) w/Flip-Up Cover
27	Igloo Shut-In Release Button (White)
28	Igloo GUI #5 USB Port (side turret panel)
29	DVR USB Port (side turret panel)
30	Igloo/Wetpot SOS GUI #4 USB Port
31	Not Used
32	Igloo Diver Primary Communications
33	Igloo Atmosphere Monitor
34	Igloo Primary Communications
35	Igloo GUI Speaker
36	Igloo GUI #5
37	Igloo GUI On/Off Switch
38	Storage

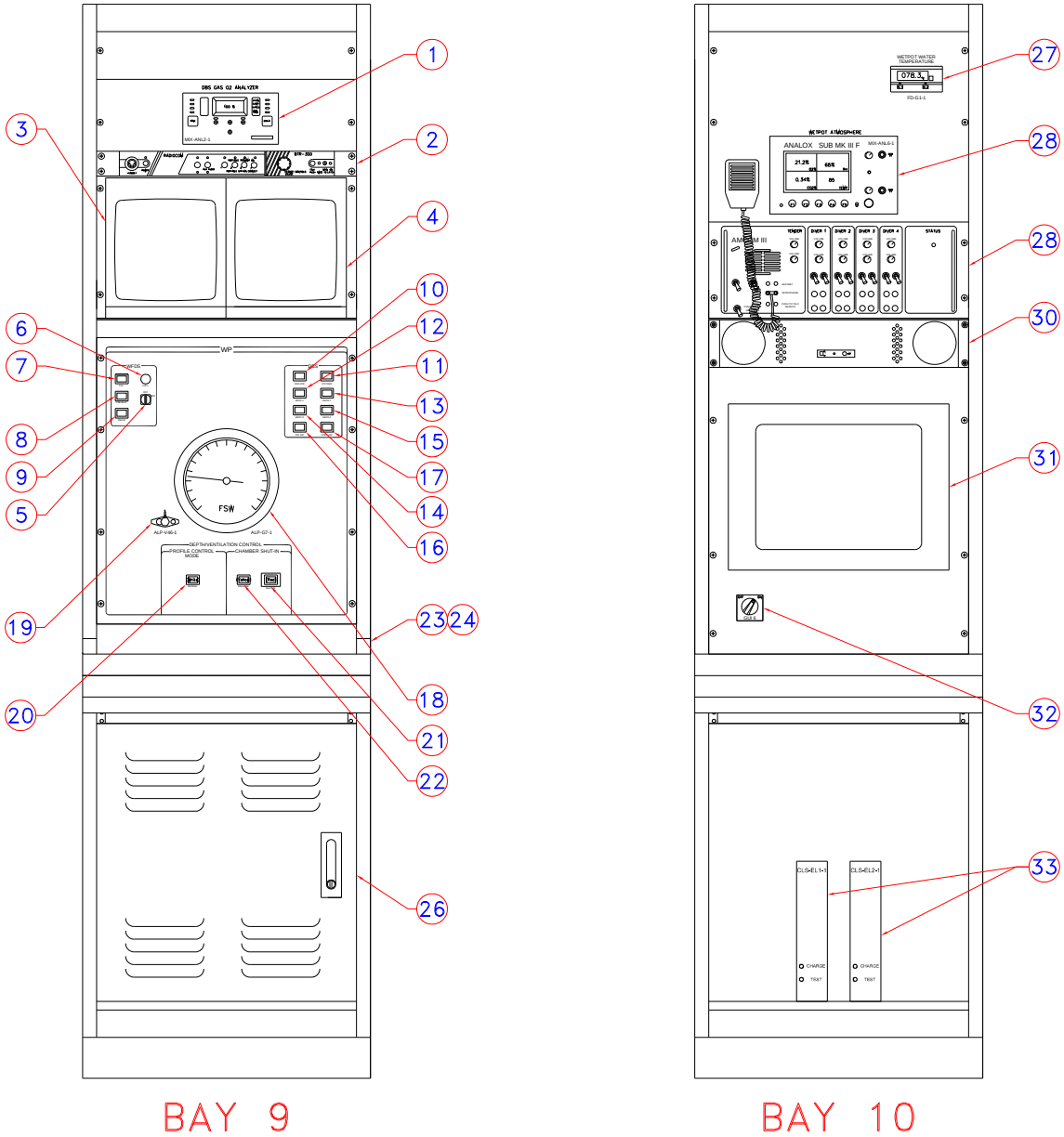

Figure 2-4 Wetpot Operating Station, Bay 9 and Bay 10

Figure 2-4 Wetpot Operating Station Legend

ITEM	DESCRIPTION
1	DBS Oxygen/Mixed Gas Supply Oxygen Analyzer
2	Station 2 Wireless Communications Base Station
3	Wetpot External Camera Monitor
4	Wetpot Internal Camera Monitor
5	Wetpot Fill & Drain Power On/Off Keyed Switch
6	Wetpot Full Indicator Lamp (Blue)
7	Wetpot Fill Button (Blue0
8	Wetpot Preheat Button (Blue)
9	Wetpot Drain Button (Blue)
10	DBS Isolate Button (Red)
11	DBS Oxygen Supply Button (Green)
12	HEO2 1 Supply Button (Buff)
13	HEO2 2 Supply Button (Buff)
14	HEO2 3 Supply Button (Buff)
15	HEO2 4 Supply Button (Buff)
16	DBS Primary Air Supply Button (White)
17	DBS Standby Air Supply Button (White)
18	Wetpot Dial Depth Gage
19	Wetpot Dial Depth Gage Calibration Valve
20	Wetpot Supervisory Control Manual Button (White)
21	Wetpot Shut-In Button (White) w/Flip-Up Cover
22	Wetpot Shut-In Release Button (White)
23	Wetpot GUI #6 USB Port (side turret panel)
24	Wetpot Water Level Sensor Programming RS-232 Port (side turret panel)
25	Not Used
26	Storage
27	Wetpot Water Temperature Digital Gage
28	Wetpot Atmosphere Monitor
29	Wetpot Diver Primary Communications
30	Wetpot GUI Speaker
31	Wetpot GUI #6
32	Wetpot GUI On/Off Switch
33	Console Emergency Lighting Batteries

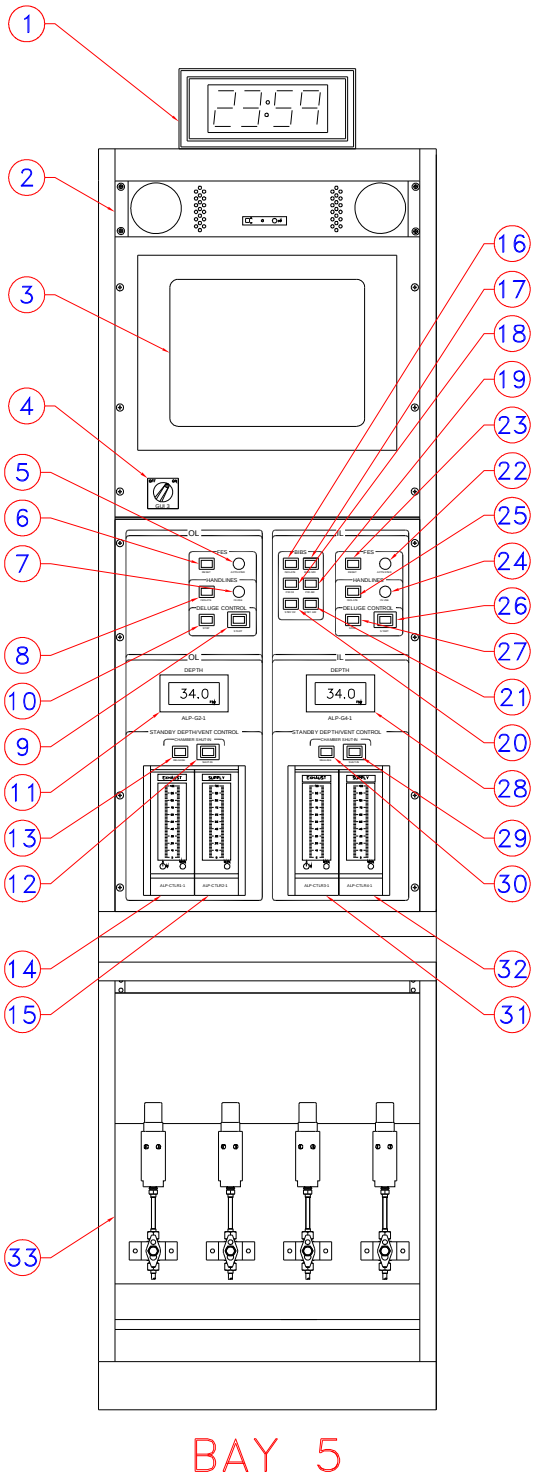

Figure 2-5 Inner/Outer Lock Standby Operating Station, Bay 5

Figure 2-5 Outer/Inner Lock Standby Operating Station Legend

ITEM	DESCRIPTION
1	Clock
2	GUI #3 Speaker
3	GUI #3
4	GUI #3 On/Off Switch
5	Outer Lock FES Deluge Activated Indication Lamp (Red)
6	Outer Lock FES Reset Button (Yellow)
7	FES Hand-Lines In Use Indicator Lamp (Red)
8	FES Hand-Lines Isolate Button (Yellow)
9	Outer Lock Deluge Start Button (Red) w/Flip-Up Cover
10	Outer Lock Deluge Stop button (Yellow)
11	Outer Lock Digital Depth Gage
12	Outer Lock Shut-In Button (White) w/Flip-Up Cover
13	Outer Lock Shut-In Release Button (White)
14	Outer Lock Exhaust Pneumatic Switching Station
15	Outer Lock Standby Supply Pneumatic Loading Station
16	BIBS Isolate Button (Red)
17	BIBS Mixed Gas Supply Button (Orange)
18	BIBS Primary O2 Supply Button (Green)
19	BIBS Standby Supply Button (Green)
20	BIBS Primary Air Button (White)
21	BIBS Standby Air Button (White)
22	Inner Lock FES Deluge Activated Indication Lamp (Red)
23	Inner Lock FES Reset Button (Yellow)
24	FES Hand-Lines In Use Indicator Lamp (Red)
25	FES Hand-Lines Isolate Button (Yellow)
26	Inner Lock Deluge Start Button (Red) w/Flip-Up Cover
27	Inner Lock Deluge Stop button (Yellow)
28	Inner Lock Digital Depth Gage
29	Inner Lock Shut-In Button (White) w/Flip-Up Cover
30	Inner Lock Shut-In Release Button (White)
31	Inner Lock Exhaust Pneumatic Switching Station
32	Inner Lock Standby Supply Pneumatic Loading Station
33	Outer/Inner Lock Pressure Transmitter Panel

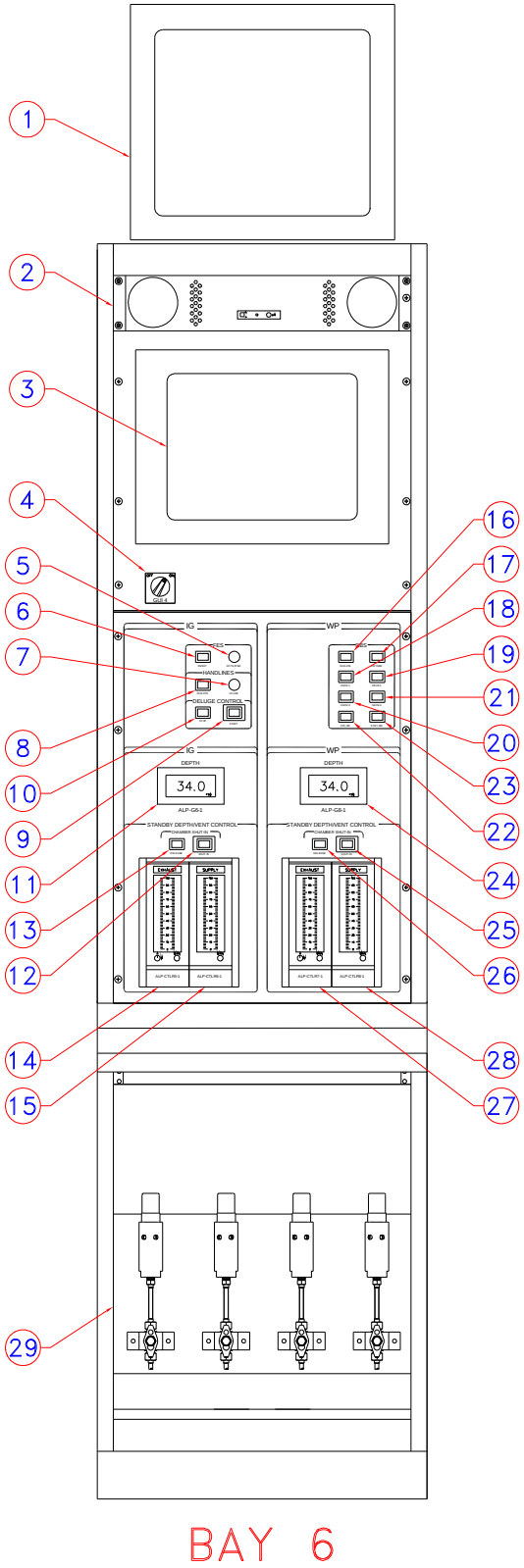

Figure 2-6 Igloo/Wetpot Standby Operating Station, Bay 6

Figure 2-6 Igloo/Wetpot Standby Operating Station Legend

ITEM	DESCRIPTION
1	(2) 42” Monitors (Diver Monitoring System)
2	GUI #4 Speaker
3	GUI #4
4	GUI #4 On/Off Switch
5	Igloo FES Deluge Activated Indication Lamp (Red)
6	Igloo FES Reset Button (Yellow)
7	FES Hand-Lines In Use Indicator Lamp (Red)
8	FES Hand-Lines Isolate Button (Yellow)
9	Igloo Deluge Start Button (Red) w/Flip-Up Cover
10	Igloo Deluge Stop button (Yellow)
11	Igloo Digital Depth Gage
12	Igloo Shut-In Button (White) w/Flip-Up Cover
13	Igloo Shut-In Release Button (White)
14	Igloo Exhaust Pneumatic Switching Station
15	Igloo Standby Supply Pneumatic Loading Station
16	DBS Isolate Button (Red)
17	DBS Oxygen Supply Button (Green)
18	HEO2 1 Supply Button (Buff)
19	HEO2 2 Supply Button (Buff)
20	HEO2 3 Supply Button (Buff)
21	HEO2 4 Supply Button (Buff)
22	DBS Primary Air Supply Button (White)
23	DBS Standby Air Supply Button (White)
24	Wetpot Digital Depth Gage
25	Wetpot Shut-In Button (White) w/Flip-Up Cover
26	Wetpot Shut-In Release Button (White)
27	Wetpot Lock Exhaust Pneumatic Switching Station
28	Wetpot Standby Supply Pneumatic Loading Station
29	Igloo/Wetpot Pressure Transmitter Panel

3.0 OPERATIONAL INSTRUCTIONS

Directing compressed air within the facility requires special alignment procedures. For detailed initial valve and component line-up refer to Chapter Seven, Section 4.4 Functional Test Plan.

3.1 System Normal and Emergency Operation

The DSF-1 Control and Instrument Air System is an integral part of a certified Diver's Life Support System. The system shall be aligned and operated in accordance with approved operating and emergency procedures in accordance with the U. S. Navy Diving and Manned Hyperbaric systems Safety Certification Manual, NAVSEA SS521-AA-MAN-010.

3.2 Graphic User Interface Controls

3.2.1 Start Up

Console & GUI power.
Turn on the Main Console Power (switch is located in Bay 3 lower section). Turn on the GUI (individual switch below each GUI). If the switch is on, but the system is not at the Main Menu (RSview not running), Turn the switch off and then back on (this will boot the system to the Main Menu).

If in an alarm condition when the Main Menu appears, press the "Acknowledge" button.

3.2.2 Main Menu (Figure 4-1)

3.2.2.1 Log In/Log Out

Select "Log In", enter your log in "User" name and "Password" (default setting is "Manager/Manager", "Operator/Operator", or "Maintenance/Maintenance").

Log Out. Click on "Log Out" button to log out.

Shut Down. Log in as Operator (or higher level), move the cursor to the top left corner and click the "Stop Project Shut Down" button. Confirm by clicking "Yes" on the pop up. Wait for RSView to close. At the Desk Top, move cursor to the bottom of the screen, from the menu bar select "start", select "Turn Off Computer", select "Turn Off". Turn off the GUI when the prompt appears that states that is safe to turn off the computer.

3.2.2.2 Console Light Test

Press the "Console Light Test", observe all console pilot lights and lighted switches illuminate. The lights will extinguish in 15 seconds.

3.2.2.3 BIBS Selection screen (see 4.2.3)

3.2.2.4 DBS Selection screen (see 4.2.4)

3.2.2.5 FES Status screen (see 4.2.5)

3.2.2.6 Observation Only screen (see 4.2.6)

3.2.2.7 Outer Lock, Inner Lock, Igloo & Wetpot Pressure Control Screens (see 4.2.7)

3.2.2.8 Dive Log (see 4.2.8)

3.2.2.9 System Settings (see 4.2.)

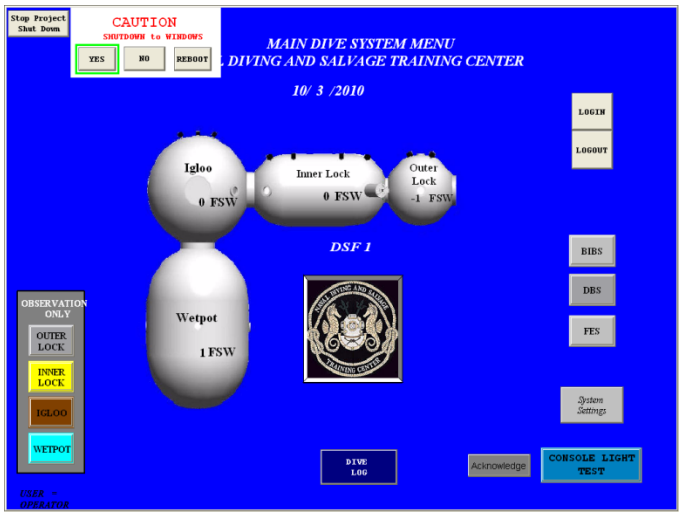

Figure 0-7 Main Menu

3.2.3 BIBS Graphic Controls

Select BIBS from the Main Menu (if the BIBS button is flashing RED, this indicates that the BIBS is isolated).

From the BIBS Graphic Control Screen (Figure 4-2), align the BIBS by pressing the "Isolate" button,(when BIBS is isolated all valve graphics will be "Red" (if all valve graphics indicate RED, skip this step). Press "Isolate again and hull stop valve graphics will change to "Green".

Select the desired BIBS breathing medium by pressing the graphic button of the desired gas (the stop valve graphic will change to "Green").

The BIBS is aligned and ready for occupant use.

Select the "Previous Display" button to return to the Main Menu.

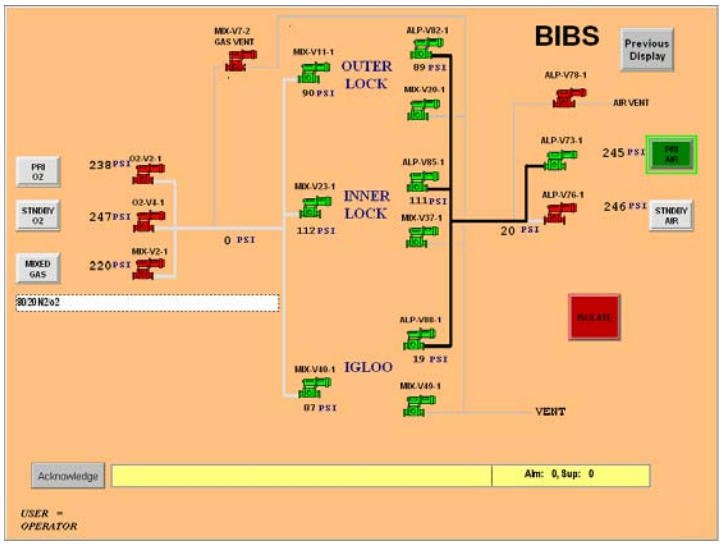

Figure 3-8 BIBS Graphic Control Screen

For a more detailed description of the BIBS operation/function refer to the DSF-1 BIBS Manual, Section 3.0.

3.2.4 DBS Graphic Controls

Select DBS from the Main Menu (if the DBS button is flashing RED, this indicates that the DBS is isolated).

From the DBS Graphic Control Screen (Figure 4-3), align the DBS by pressing the "Isolate" button,(when DBS is isolated all valve graphics will be "Red" (if all valve graphics indicate RED, skip this step). Press "Isolate again and hull stop valve graphics will change to "Green".

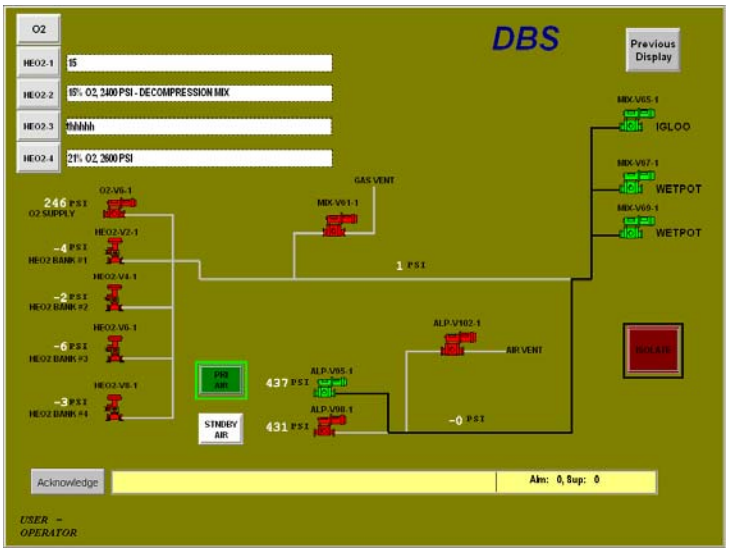

Figure 3-9 DBS Graphic Control Screen

To enter HEO2 Bank oxygen percentages;

Method 1. Click in the white space provided to the right of the DBS HEO2 bank selection buttons, enter the desired data using keyboard, click in another data entry field to accept new data or press enter, a keyboard window will appear, press "Download". Press ESC to un-highlight data entry field.
Method 2. Touch the white space twice, a keyboard window will appear, enter desired data, and press "Download". Press ESC to un-highlight data entry field.

Select the desired DBS breathing medium by pressing the graphic button of the desired gas (the stop valve graphic will change to "Green").

The DBS is aligned for occupant use.

Select the "Previous Display" button to return to the Main Menu.

For a more detailed description of the DBS operation/function refer to the DSF-1 DBS Manual, Section 3.0.

3.2.5 FES Graphic Display

Select FES from the Main Menu.

Note that on the FES graphics (Figure 4-4) there are no controls. This graphic provides system information only. All FES actions are considered emergency actions and will only be selected from the mechanical lighted push buttons on the OS & SOS. The main purpose for not having FES actions performed from a graphics screen is to have operators execute emergency FES actions from a single location and not have to switch graphic screens in order to locate emergency action controls.

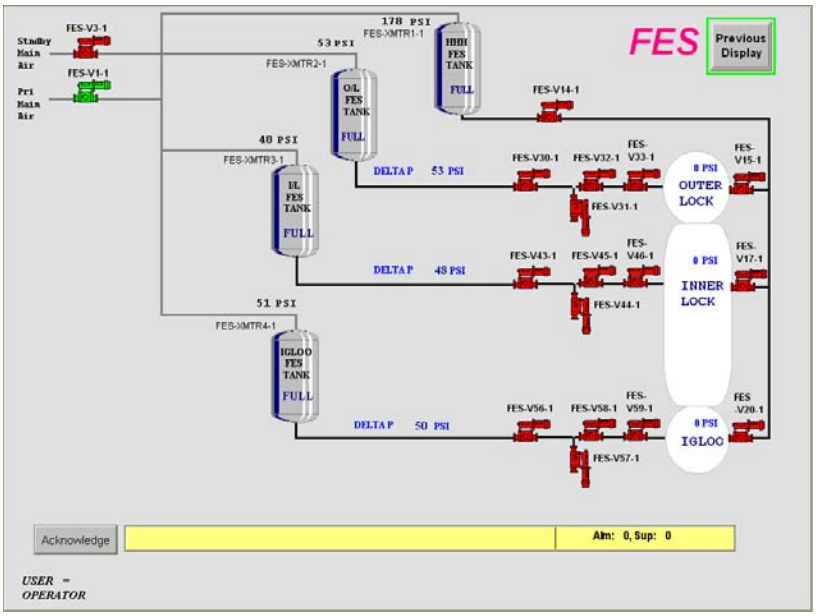

Figure 3-10 FES Graphic Status Screen

If valve FES-V1-1 or FES-V3-1 is not “Green” (open), select either primary or standby air to the FES Reduction Panel from Bay 3 OS.
For a more detailed description of the FES operation/function refer to the DSF-1 FES Manual, Section 3.0.

Select the “Previous Display” button to return to the Main Menu.

3.2.6 Observation Only Menu

This menu is available from the Main Menu (Figure 4-1) and is provided for personnel who are not authorized log-in access to monitor supervisory control displays of in-progress dives. Log in is not required to select these screens and no action taken on these screens affects the supervisory control system. It is intended for this screen to be used by observers in an area clear of chamber operators/supervisors (e.g. Bays 5, 6 8 or 10 GUIs during a treatment in the inner lock).

To view a pdf file of the USN Dive Manual Treatment Tables, select “Dive Manual”, scroll through pages to the desired Table. Close the window to return to the previous view.

3.2.7 Chamber Pressure Control Graphics

4.2.7.1 Chamber Pressure Control Graphics Selection

The DSF-1 graphic (pressure vessel image) displays the current depth of each chamber in Feet of Seawater (FSW).

To open a given chamber pressure control screen, select the chamber, select yes in the window that is displayed (the Pressure Control Screen will appear for the chamber selected). Each chamber Pressure Control Screen has a different background color to provide a visual difference between chamber pressure control screens.

3.2.7.2 Chamber Pressure Control Graphics Functions
(refer to Figure 3-5 for the following details).

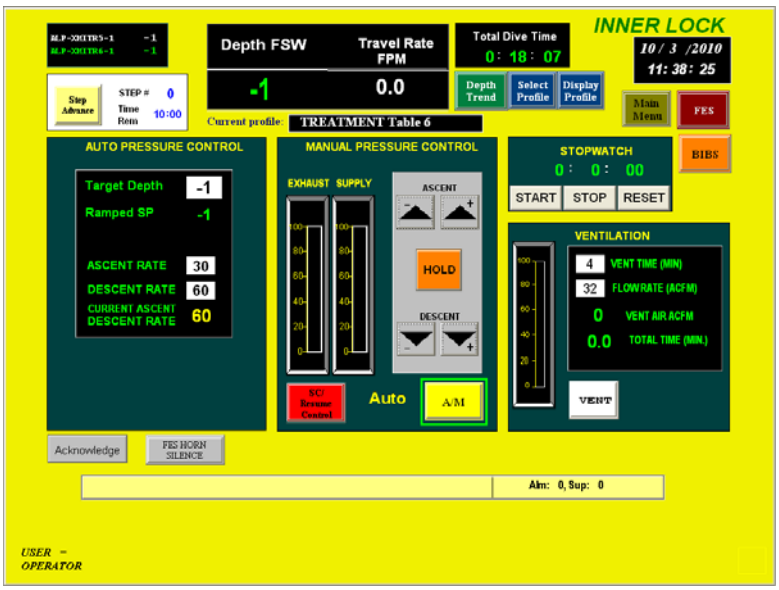

Figure 3-11 Inner Lock Pressure Control Graphics Screen

Chamber Identification (e.g. Outer Lock, Inner Lock, Igloo or Wetpot) is provided in the upper right-hand corner of the screen. Immediately below the name is the current Date/Time.

Chamber depth pressure transmitter graphics is provided in the upper left-hand corner of the screen. This display provides pressure transmitter designator and current depth of the chamber (in FSW). The SC uses the signal from these transmitters to control chamber depth and for chamber depth display. In the event one transmitter fails the SC will automatically use the signal from the working transmitter and the out of tolerance transmitter display will change to "Red". The SC uses the transmitter which indicates the deepest depth to control chamber depth. SC depth display can be compared with the current analog depth gage reading of a given chamber.

Chamber Depth and Travel Rate information is displayed in the upper middle of the screen. This graphic displays current chamber depth in FSW and the current travel-rate of the chamber (ascent/descent) in Feet Per Minute (FPM).

Total Dive Time is displayed in the upper middle of the screen. This graphic displays the Total Dive Time (TDT) of the current dive if a dive is in progress or the TDT of the previous dive if no dive is in progress. This timer starts when the chamber is pressurized and stops when the chamber pressure returns to zero. This timer is automatic and cannot be controlled by the operator.

The Stop Watch display is provided with a Start, Stop and Reset button for operator control. This timer starts when the chamber is pressurized and continues to run until stopped by the operator or when it is automatically started at the beginning of a new pressure sequence. This timer can be controlled at any time by the operator.

The Main Menu button can be selected at any time to return to the Main Menu.

The FES button can be selected at any time to view the status of the FES valves, pressures and tank water levels.

The BIBS button can be selected at any time to view the status of BIBS valves and pressures and to select or change BIBS breathing medium selection.

The DBS button (available only on the Igloo and Wetpot pressure control screens) can be selected at any time to view the status of DBS valves and pressures and to select or change selection of DBS breathing medium.

The Dive Profile (DIVE PROF) screen (Figure 4-5) provides the operator with a menu of previously programmed dives/treatment tables and the ability for the operator to program any dive that is within system capabilities. Refer to paragraph 4.2.9 below for instructions on how to select and build a dive profile.

3.2.8 Dive Log

The dive log is a MS Excel format.

Select Dive Log, press Yes, then press ALT-TAB to enter the dive log spread-sheet (Figure 4-6). Enter the required data and save or print the log.

COMMAND SMOOTH LOG

Dive ID:
Date:

Report Run Date:

Command: NDSTC
UIC: 0610A

Equipment

Platform:	Gas Source:	Apparatus:	Dress:

	Breathing Medium				Environment	
Gas Mix	%	PP	Dive Location:		Altitude:	
O2	%		Air Temp:		Water Temp:	
He	%		Current:		Wave Height:	
N2	%		Visibility:		Bottom Type:	

DIVE DATA

Diver	LS	BT	LB	TDT	RS	TTD	Depth	RG	Repet	SI	RNT
Date	Decompression Location				Decompression Table					T/S	

DIVE DESCRIPTION

Purpose:
Description:

Signatures	Standby Divers
Diving Supervisor:	
Master Diver:	
Diving Officer:	

Figure 3-12 Dive Log Graphic Screen

To save the log, click file in the menu bar, click save as, select the desired file folder, name the file and click save.

To print the log, click file in the menu bar, click print, select assigned printer, and click OK.

These files may be down-loaded through the USB port provided at the console operating station.

Access to the Dive Log file is available from the desk-top prior to running the RSView32 Runtime program. Therefore there is no pass-word protection of these files. If security is essential to an Excel file, pass-word protects the workbook or sheet.

3.2.9 Dive Profile Screen

To select a profile from the Dive Profile (Figure 4-7) menu, double left click in the PROFILE FILE NAME window (white space), a Recipe window will appear, click on the ▼button to open the menu. Scroll through the profiles and double left click on the profile desired. Select "Restore" (the selected dive profile data will appear in the profile builder blocks), select "Download to PLC". The selected profile name will appear in the "Profile Description" window and in the "Profile File Name" window. Select "Previous Display" to return to the pressure control screen, note that the file name of the selected profile appears in the "Current Profile" window.

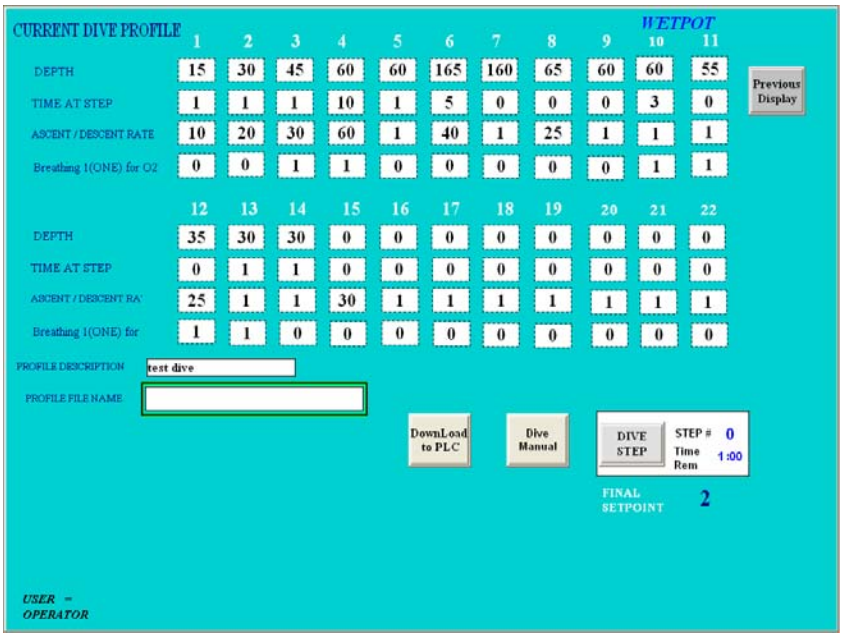

Figure 3-13 Dive Profile Graphic Screen

To build a new profile;
enter desired depth in column 1 DEPTH block,

enter time at depth in column 1 TIME AT DEPTH block,
enter desired ascent/descent rate in column 1 ASCENT/DESCENT RATE block,
enter desired breathing medium in column 1 BREATHING block (enter 1 or O2 and 0 for air,
continue the process of profile selection in the remaining columns until you reach your desired end of profile (normally the surface).
Note: all columns must have a 1 entered in the ASCENT/DESCENT RATE block (whether that column is used for the profile or not).

To save as a new profile:
enter the desired name in the PROFILE FILE NAME window and also in the PROFILE DESCRIPTION window,
select "Download to PLC", double click in the PROFILE FILE NAME window (the Recipe window appears),
select "Save", the profile is now saved in the profile menu.

When modifying an existing profile:
Select "Save", at the prompt, (that the file name exists) select yes to save the new data under the existing profile name.

3.2.10 Treatment Tables (TRT TABLES)

The Treatment Tables screen (Figure 4-8) provides a color-coded, chart-style view of the selected dive/treatment table profile.

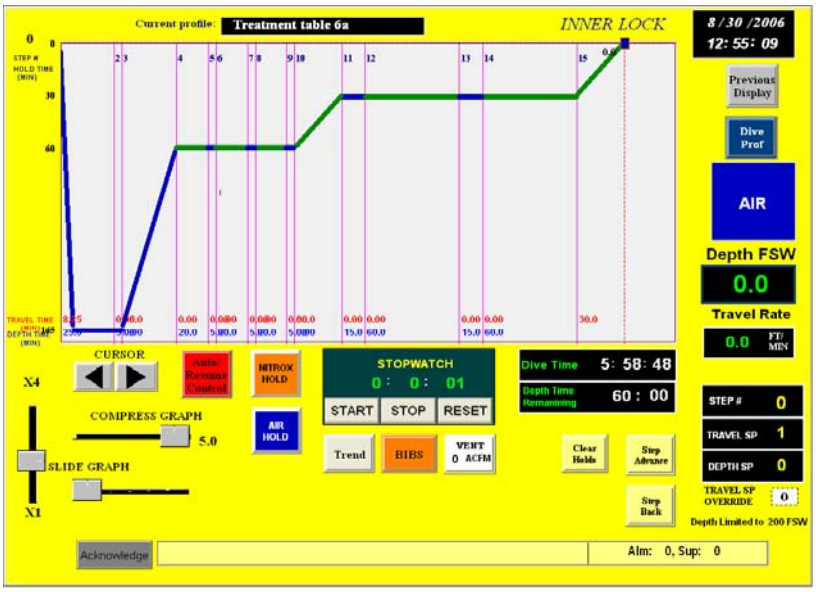

Figure 3-14 Treatment Table Graphic Screen

Chamber Identification (e.g. Outer Lock, Inner Lock, Igloo or Wetpot) is provided in the upper right-hand corner of the screen. Immediately beside name is the current Date/Time.

Previous Display button returns to previous screen selected.

The Dive Profile (DIVE PROF) screen provides the operator with a menu of previously programmed dives/treatment tables and the ability for the operator to program any dive that is within system capabilities. Refer to paragraph 4.2.9 above for instructions on how to select and build a dive profile.

The block below Diver Profile displays either “Air” with a blue background or “O2” with a green background. This display indicates the breathing medium programmed for the current segment of a selected dive profile. This block is only an indicator, operator action is required to select the correct breathing medium and inside-tender action is required to place the patient/diver on the BIBS mask.

Chamber Depth and Travel Rate information is displayed in the middle, left-hand side of the screen. This graphic displays current chamber depth in FSW and the current travel-rate of the chamber (ascent/descent) in Feet Per Minute (FPM).

Dive Time is displayed in the middle, left-hand lower section of the screen just below the profile window. This graphic displays the Total Dive Time (TDT) of the current dive if a dive is in progress or the TDT of the previous dive if no dive is in progress. This timer starts when the chamber is pressurized and stops when the chamber pressure returns to zero. This timer is automatic and cannot be controlled by the operator.

Depth Time Remaining is displayed below the Dive Time. This graphic displays the time remaining at the current depth (as defined by the profile).

Clear Holds graphic button clears holds displayed in the profile. If holds were performed during the last use of a profile (and not previously cleared), when the profile is downloaded, press this button to clear holds prior to starting the dive profile.

The Stop Watch display is provided with a Start, Stop and Reset button for operator control. This timer starts when the chamber is pressurized and continues to run until stopped by the operator or when it is automatically started at the beginning of a new pressure sequence. This timer can be controlled at any time by the operator.

The BIBS button can be selected at any time to view the status of BIBS valves and pressures and to select or change BIBS breathing medium selection. Immediately below the BIBS button, “BIBS O2 Selected” will appear once BIBS O2 is on-line (selected). If the dive goes below 60 FSW the “BIBS O2 Selected” graphic will flash red as a warning to the operator (this is not programmed to be an indicated alarm, only a visual indication to the operator.

If running a profile in the igloo or wetpot, the DBS button is available and can be selected in the same manner as BIBS.

Immediately to the right of the DBS button, “DBS O2 Selected” will appear once DBS O2 is on-line (selected). If the dive goes below 60 FSW the “DBS O2 Selected” graphic will flash red as a warning to the operator (this is not programmed to be an indicated alarm, only a visual indication to the operator.

The “Vent” button will start a ventilation of the chamber using the time and ACFM currently downloaded in the vent program. Prior to using this button to vent, verify that the time/ACFM desired by returning to the Pressure Profile Screen for the chamber and update the required fields. The Vent button will flash green and indicate the current ACFM flow, the button will return to a white background when the vent-time is complete. When running a vent from the TRT Table screen, pressing the Vent button during a vent will “pause” the vent, to continue the vent press the vent button again. When the vent is paused, the vent button will change to yellow and display “Paused” in the button graphic.

The “Trend” button opens a Trending – Display window that displays the dive trend in chart format. Date and time are displayed under the graph. Historical data can be displayed by placing the mouse cursor at any point on the graph-line and left clicking, the depth, time and the programmed breathing medium data corresponding to that exact point in the dive will be displayed in the lower window. To exit the window left clack any place outside the window (not on a control button).

To adjust the dive profile to fit the display window use the following slide graphics;

X1-X4 will adjust the vertical size to the dive profile graphic,

Compress graph will adjust the horizontal width of the dive profile graphic,

The Slide Graph will adjust the profile to the right.

The Cursor ◀▶ buttons will move the cursor to the left or right along the current depth.

The “Nitrox Hold” button places the dive in hold and displays the hold on dive profile in orange. The button flashes yellow to orange and activates an alarm condition when selected. To resume the dive, press “Auto/Resume control.

The “Air Hold” button places the dive in hold and displays the hold on dive profile in blue. The button flashes dark blue to light blue and activates an alarm condition when selected. To resume the dive, press “Auto/Resume control.

Auto/Resume Control will place the system in supervisory controlled auto. To start the profile, Step Advance must be selected.

Step Advance will advance the current dive profile selected to the next step. When beginning a dive/treatment table profile Step Advance, advances to Step 1 and starts the dive profile. Step Advance activates an alarm condition when selected. To resume the dive, press "Auto/Resume control.

Step Back will set the dive profile back one step each time it is pressed. Step Back activates an alarm condition when selected. To resume the dive, press "Auto/Resume control.

Step # window displays the current step of the dive profile selected.

Travel SP window displays the current travel-rate Set Point of the dive profile selected.

Depth SP window displays the current depth Set Point of the dive profile selected.

Travel SP Override allows the operator to override the current set point (ascent/descent rate only). This is a temporary override and does not change the dive/treatment table profile that is selected.

Profile window

Depth (left-hand side) intervals are displayed in increments up to the maximum depth of the profile selected.

The Step # of each segment is displayed horizontally across the screen.

Hold Time (min), when used is displayed horizontally across the screen at this point.

Travel Time (min) of each segment is displayed horizontally across the screen at this point.

Depth Time (min) of each segment is displayed horizontally across the screen at this point.

Depth Limited to XXX FSW is a visual indication of the maximum depth set point that has been loaded into the SC System Setting.

Acknowledge button silences the audible alarm and clears the alarm status in the alarm banner.

Alarm Banner displays the current alarm data.

3.2.11 Depth Trend Screen

The Depth Trend screen (Figure 4-9) provides a chart-style view of depth set-points (indicated in blue) and chamber depth profile (indicated in red).

The Current Profile window, at the top of the screen, displays the name of the current profile selected.

Chamber Identification (e.g. Outer Lock, Inner Lock, Igloo or Wetpot) along with current day, month and year is provided in the upper, center portion of the screen, immediately below current profile window.

Previous Display button returns to previous screen selected.

Main Menu button returns to Main Menu.

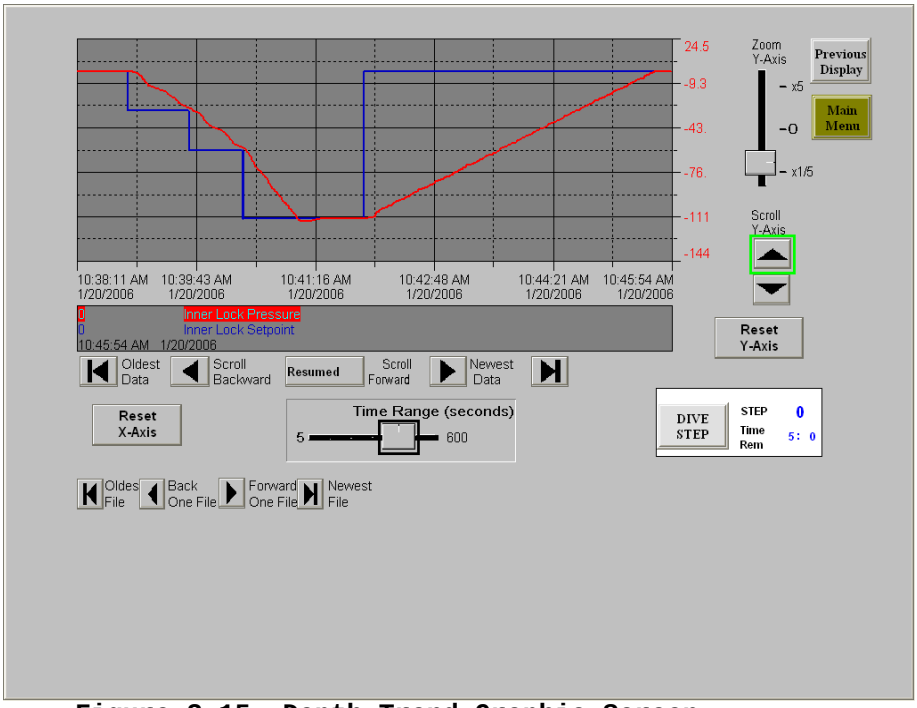

Figure 3-15 Depth Trend Graphic Screen

The trend display window shows a chart outline of the profile and trend for a given time-frame. The buttons at the bottom of the display are used to select a desired time/date. The buttons navigate as follows;

- ■◀ displays oldest data
- ◀◀ moves display back 10 hours
- ◀ moves display back 5 hours
- ■ starts scroll or pauses scroll
- ▶ moves display forward 5 hours
- ▶▶ moves display forward 10 hours
- ■ ▶ displays most current data

Clicking on any point of a profile displays a reference-line with a window that displays; actual chamber depth (red), set-point depth (blue), breathing medium (0 or 1, green). A legend is provided at the bottom of the page.

3.2.12 System Settings

The Systems Settings screen Figure 4-10) allows a manager or maintenance person to change current maximum depth allowed, maximum system ascent rate allowed and maximum system descent rate allowed. Additionally, the system administrator can change passwords, manage security accounts and security codes from this screen.

After logging in, to change any of the settings, select the data window by clicking on the window twice (not double-click), a keypad window will appear, enter desired depth and click download. Logging out at this screen logs-out entire system.

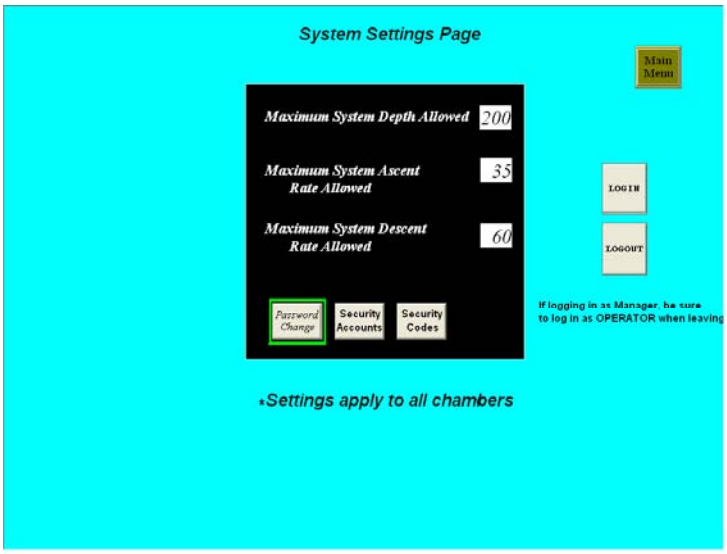

Figure 3-16 System Settings Graphic Screen

END OF SECTION

END OF SPECIFICATION