Section C

SPECIFICATION

for

HYPERBARIC SYSTEMS OVERHAUL

of

BUILDINGS 987 & 989

at

SEAL DELIVERY VEHICLE TEAM 1

at

NAVAL STATION PEARL HARBOR, PEARL CITY, HI

24 May 2016

TABLE OF CONTENTS

SECTION 1: GENERAL PARAGRAPHS

SECTION 2: OPERATION/PERFORMANCE REQUIREMENTS

SECTION 3: PIPING & INSTRUMENTATION (P&I) TECHNICAL REQUIREMENTS

3.1 GENERAL REQUIREMENTS

3.2 SPECIFIC TO CONTRACT

SECTION 4: PRESSURE VESSEL FOR HUMAN OCCUPANCY (PVHO)

4.1 GENERAL REQUIREMENTS

4.2 SPECIFIC TO CONTRACT

SECTION 5: QUALITY ASSURANCE

5.1 GENERAL REQUIREMENTS

SECTION 6: CONCEPT OF OPERATIONS

NOTE: THE SYMBOL "N/A" BESIDE A PARAGRAPH NUMBER INDICATES THAT NO SPECIFICATION IS INTENDED IN THAT PARAGRAPH.

SECTION 1

1. GENERAL PARAGRAPHS

1.1 GENERAL:

1.1.1 INTENTION: It is the declared and acknowledged intention and meaning to overhaul the hyperbaric systems, as described herein, to be pretested, overhauled, and installed, and retested at the Seal Delivery Team 1 (SDVT1) facility, in Pearl City, HI. The contractor shall be responsible for all work specified herein. All Hyperbaric Facilities shall be complete and useable upon completion of the work.

1.1.2 DESCRIPTION OF WORK: The contractor shall provide all labor and materials for the design, procurement, fabrication, maintenance, repair, and assembly, shop testing and shipping of the described Hyperbaric Facilities. Further, the contractor shall prepare and submit all documents, records and manuals specified herein. Some examples of the work the contractor shall design, fabricate and install are as follows:

a. Overhaul and Installation of hyperbaric facilities as described herein.
b. Submission of design, fabrication & test documents.

1.1.3 EXISTING FACILITIES: Section 6 contains drawings and schematics of the existing facilities and proposed changes. The hyperbaric contractor shall provide the work described herein. SDVT1 has all of the record drawings for the facility and are available upon request.

1.1.4 GOVERNMENT FURNISHED EQUIPMENT (GFE): As noted.

1.1.5 EXISTING CONDITIONS: The facility is currently operational. Copies of the existing drawings of the existing systems shall be turned over to the contractor upon request.

1.1.6 LOCATION: Installation and final system testing of the hyperbaric systems will be conducted at SDVT1, NS Pearl Harbor, Pearl City, HI.

1.1.7 TIME OF DELIVERY: The work shall begin (on the “Start Work date”) 15 consecutive calendar days after the "Award Date". The contract completion date is **365** consecutive calendar days after the “Award Date”. The "Award Date" is shown in Section A, block 28 of this contract. The contractor shall make no component nor material procurement until after the Preliminary Design has been submitted, unless approval is received from the Contracting Officers Technical Representative (COR).

1.1.8 RE-ENTRY CONTROL: The following re-entry control procedures are required to be performed by the contractor when breachment of a certification boundary is required during this contract. The re-entry control process must be coordinated with SDVT1 diving personnel.

1.1.8.1 PRELIMINARY RE-ENTRY CONTROL: The contractor shall submit to the SDVT1 Master Diver and the COR, at least fifteen (15) days in advance of the desired start date, the following re-entry control information:

a. Requested Work Boundaries.

b. Estimated System Down Time (in days).

c. Desired Start Date.

1.1.8.2 FINAL RE-ENTRY CONTROL DOCUMENTATION: Upon completion of the work requiring re-entry control, the contractor shall submit the following information to the SDVT1 Master Diver and the Contracting Officer:

a. Purchase orders with manufacturers letters of compliance.

b. Weld procedure and welders qualifications.

c. NDT procedure, results of NDT, and inspectors qualifications.

d. Flush procedures and results.

e. Cleaning procedure and results of cleaning.

f. Hydrostatic test procedure and results.

g. Joint identification drawings and welding log.

h. Air sample results.

1.1.9 “AS-NEW” DEFINITION: For all components that shall be serviced, refurbished to an "as new" condition, inspected, and tested, the "as new" condition of the components is that condition which is acceptable to the original design and/or meeting the requirements of the quality control provisions of the Military Specification (MILSPEC), or commercial code for the particular component. The "as new" condition includes, but is not limited to the following: complete internal/external visual inspection, replacement of all software, operational test and cleaning. In the event the component cannot be restored to "as new" condition an in-kind replacement for the component is required. The component must pass all the tests of the original design capabilities. Justification for replacement components must be accepted by the Contracting Officer.

1.1.10 "IN KIND" REPLACEMENT DEFINITION: The “in kind” replacement of a component is defined as the identical component if the identical component is still in manufacture. In the event the identical component is no longer in manufacture, the replacement component must meet all of the requirements of the original component. The requirements of the original components can usually be obtained from the original supplier/manufacturer. If “in kind” components are not available, the COR will be notified by the contractor. The replacement components shall be reviewed and accepted by the COR prior to acquisition.

1.1.11 “HYPERBARIC” TERM: Anywhere in this specification where the term “Hyperbaric” is used, it shall be assumed (where applicable) to mean “Hyperbaric Systems”.

1.1.12 “PSI” TERM: Anywhere in this specification where the term “PSI” (pounds per square inch) is used it shall be assumed (where applicable) to mean gauge pounds per square inch.

1.1.13 PRE-TESTING OF EXISTING SYSTEMS: The contractor shall pretest all overhauled facility components to determine performance of each component that is to remain in the system. Any equipment or component that successfully pass the pre-test and fail at final testing shall be replaced at the contractor’s expense.

1.2 ADDITIONAL PARAGRAPHS:

1.2.1 SPECIAL PERFORMANCE REQUIREMENTS DUE TO HAZARDS TO PERSONNEL: Attention of prospective offerors is called to the fact that this contract calls for the fabrication of life sensitive support systems. Failure to adhere to the highest standards of metallurgy, welding, oxygen cleanliness and workmanship will create severe hazards to persons working on or near these systems when they are pressurized. Failure to meet these requirements may be cause for termination for default, and in any event will be cause for government rejection of components.

1.2.2 CONTRACTORS TECHNICAL RESPONSIBILITY: This specification contains technical requirements to which the contractor must adhere; however, it is the contractor's responsibility to confirm by engineering analysis that component sizes cited herein are adequate to perform the "Operational/ Performance Requirements" cited in Section 2. Typical of such items are pipe sizes, number of high pressure media storage flasks, etc. Data has been provided herein to demonstrate the conceptual feasibility of such a facility. Other technical issues that are not specified herein are at the discretion of the contractor. The contractor shall cite their intentions in these areas in the Preliminary Design.

1.2.3 CONFORMANCE REQUIREMENTS: Omissions from the drawings or specifications or the misdescription of details of work which are manifestly necessary to carry out the intent of the drawings and specifications, or which are customarily performed, shall not relieve the contractor from performing such omitted or misdescribed details of the work but they shall be performed as if fully and correctly set forth and described in the drawings and specifications.

1.2.4 CONTRACTOR'S SPECIFICATION CHECK: The contractor shall check all drawings and specifications furnished immediately upon receipt and shall promptly notify the government of any discrepancies. Numbers marked on drawings shall in general be followed in preference to scale measurements. Large scale drawings shall in general govern small scale drawings. The contractor shall compare all drawings and verify the data before laying out the work and will be responsible for any errors that might have been avoided thereby.

1.2.5 CONTRACTOR'S SITE VERIFICATION CHECK: The contract requires the interface of new material/equipment with existing equipment in the building. The contractor is responsible for on-site verification of existing conditions. The contractor is responsible for the integration of new equipment into existing spaces, and the interface of new equipment with existing systems, such as gas, electrical, water, etc. Prior to the submission of the Final Design, the contractor is responsible for visiting the site to facilitate layout of the work.

1.2.6 STANDARD PRODUCTS: Whenever practical, use will be made of materials and equipment that are standard catalog products of manufacturers regularly engaged in the production of such materials and equipment and shall be the manufacturer's latest standard design that complies with the specification requirements. Where two or more products of a similar type are used, they will be products of the same manufacturer. Where two or more products are of a similar type that the same manufacturer's model number can be used, all the products shall be identical. Where standard products are available which have been proven successful for hyperbaric application, they shall be used. Each major component used in this installation will be clearly marked so that the manufacturer, model, serial number, and the principal characteristics of the item can readily be determined.

1.2.7 DOCUMENT SUBMITTAL SCHEDULE: The following is a summary of the documents that are required to be submitted to the government. Five copies of each document shall be submitted. Document descriptions are in Section 5, "Quality Assurance". Piecemeal submittal of documents is unacceptable; such submittals shall be returned. Submittals shall be completed and delivered no later than the dates listed below:

a. 60 Days After "Start Work Date":

1. Preliminary Design Package.
2. Quality Assurance Plan.
3. Preliminary System Manual Outline (where applicable).
4. Weld Procedures, Welders Qualification and Welder Qualification Records (where applicable).
5. 80% Valve & Component Database/Component Manufacturer's Design Data (CMDD).
6. Functional Test Plan, Painting Plan, Hydrostatic Test Plan, Cleaning Procedures and Plan; and gas sample procedures and plan (each where applicable).
7. Envelope Functional Test Plan.

b. 30 Days Before Contract Completion Date:

1. Record Drawings.
2. 100% Contractor's Records and Documents.
3. 100% Valve & Component Database/Component Manufacturer's Design Data (CMDD).
4. Final System Manual.
5. Gas Sample Reports.
6. Functional Test Records & Reports.

7. Purchase Orders.

c. Monthly Report: Each Monthly Submittal shall be delivered no later than 10 days after the beginning of each month and shall include:

1. Project Schedule.
2. Valve & Component database (latest revision).
3. Current Progress Report.

1.2.8 HYPERBARIC FACILITY CODES AND STANDARDS: The contractor's designs and all other work provided under this contract must assure in all instances that the finished hyperbaric facility conforms to the codes and standards listed below. Areas of conflict shall be brought to the attention of the government. The issue of the respective code to be used for this contract is the effective code at the time of signing of the contract.

a. ASME Boiler and Pressure Vessel Code (BPVC) Section VIII

b. NAVSEA SS521-AA-MAN-010, "U.S. Navy Diving and Manned Hyperbaric Systems Safety Certification Manual".

c. USN Navy Dive Manual SS521-AG-PRO-010

d. Hyperbaric Facilities UFC 4-159-01N (formerly DM-39, "Hyperbaric Facilities Design Manual").

e. NFPA 99, "Health Care Facilities".

f. TMCHENG/05-010-SCA

1.2.9 REFERENCE SOURCES: Reference publications are cited throughout this specification. The addresses of the sponsoring organizations are listed below, and if the source of the publications is different from the address of the sponsoring organization, that information is also provided.

a. Military Standards (MIL-STD-, MIL-V-, MIL-Q-, etc.) can be ordered from the following address:
Standardization Documents Order Desk
Building 4 D
700 Robbins Ave
Philadelphia, PA 19111-5094

or

General Services Administration
Specifications and Consumer Information
Distribution Sections (WFSLS)
Washington Navy Yard
Building 197
Washington, DC 20407

b. Navy/NAVSEA Publications:
Navy Publications and Forms Center
5801 Tabor Ave.
Philadelphia, PA 19120

c. American National Standards Institute (ANSI)
   1430 Broadway
   New York, New York 10018
   Ph: 212-354-3300

d. American Society for Testing and Materials (ASTM)
   1916 Race Street
   Philadelphia, PA 19103
   Ph: 215-299-5400

e. American Society of Mechanical Engineers (ASME)
   345 East 47th Street
   New York, New York 10017

f. Compressed Gas Association, INC. (CGA)
   1235 Jefferson Davis Highway
   Arlington, VA 22202
   Ph: 703-979-0900

g. American Welding Society (AWS)
   2501 N.W. 7th Street
   Miami, FL 33125
   Ph: 305-443-9353

h. Department of Defense (DOD) publications can be ordered from the following address:

   US Army Adjutant General Publications Center
   2800 Eastern Boulevard
   Baltimore, Maryland 21220
   Ph: 301-671-2533

i. National Fire Protection Association (NFPA)
   1 Batterymarch Park
   P.O. Box 9101
   Quincy, MA 02269-9101
   Ph: (617) 770-3000

j. US Army Corps of Engineers (EM 385-1-1)
   Department of the Army
   US Army Corps of Engineers
   Washington, DC 20314-1000

k. National Electrical Manufacturers Association (NEMA)
   1300 N. 17th Street, Suite 1752
   Rosslyn, VA 22209

l. The Society for Protective Coatings (SSPC)
   40 24th Street, Sixth Floor
   Pittsburgh, PA 15222

1.2.10 SECURITY REQUIREMENTS: No employee or representative of the contractor will be permitted on government property unless he/she furnishes satisfactory proof that he/she is a citizen of the United States or is specifically authorized admittance by the government.

1.2.11 STATION REGULATIONS: The contractor and their employees and subcontractors shall become familiar with and obey all station regulations including fire, traffic and security regulations. All personnel employed on the station shall keep within the limits of the work and avenues of ingress and egress. Personnel shall not enter any restricted areas unless required to do so and must be cleared for such entry. The contractor's equipment shall be conspicuously marked for identification. A Hot Work chit is required from base Fire Department prior to commencement of subject Hot Work performed at the Facility and a “designated Fire Watch” and appropriate required equipment will be provided by the contractor.

1.2.12 ACCESS TO BUILDING: Regular working hours shall be an 8 ½ hour period established by the government between 6 a.m. and 4 p.m. Monday through Friday, excluding government holidays. The contractor shall make an application for work outside of the regular working hours 15 calendar days prior to such work to the government.

1.2.13 PROJECT START DATE: Due to the requirement for an operational system in the Area of Operations (AO) at all times, this system must remain operational until after the hyperbaric systems located in building 995, (provided in a separate Task Order), have been certified for use by the NAVFAC SCA.

1.2.14 EXISTING CONDITIONS AND EXTRA OBLIGATIONS OF THE CONTRACTOR: The contractor will be working in a specified section of the building. All other sections of the building other than the hyperbaric sections will be off limits to contractor personnel. The contractor and their employees will not be allowed outside the work area or in adjacent existing buildings without prior approval of the COR. The contractor shall not use the existing buildings for storage.

1.2.15 AVAILABILITY AND USE OF UTILITY SERVICES: The government will furnish standard utility services free of charge for the specified installation work and on-site testing. Unique utility requirements (any utility service not available from the building) are the responsibility of the contractor.

1.2.16 STORAGE AREAS: Unsecured outside space, not to exceed 1500 ft2, will be available at the site for use as a storage area. All storage facilities, at the contractor’s own expense and in a manner satisfactory to the COR, shall be installed, maintained, and removed prior to the final acceptance of the work. Exact location for storage and work areas shall be provided to the contractor upon request after the award of the contract.

1.2.17 REPAIR AND RESTORATION: If the contractor, during performance of the work described herein, causes damage to other features or existing elements of the described hyperbaric facilities or components or adjacent areas of the facility, the contractor shall repair and restore the item(s) to their original condition using similar methods and identical finish, at the contractor’s expense.

1.2.18 HAZARDOUS MATERIALS HANDLING: The contractor is responsible for submitting a list of all Hazardous Materials proposed for use within the scope of the contract, inclusive of the Safety Data Sheets (SDS) for each separate component, a minimum of 10 days prior to scheduled usage of the materials to the COR and the Command Engineering Officer to obtain government approval. All contracting personnel involved in the "on-site" contract performance and or administration must attend a Base Environmental Brief, prior to the start of any work. This can be arranged by the Command Engineering Department or Supply Department personnel through the Base. All Hazardous materials used and waste generated in the course of the contract that are or must be removed from the Facility and Government Installation, must be disposed of in the manner as specified by the State code for disposal of non-hazardous and hazardous materials. The contractor is responsible for obtaining the DOT approved shippable containers used to transport the HAZMAT/HAZWASTE to the receiving facility. Documents signed by the receiving facility once the material reaches its final destination need to be returned to the Command Engineering Officer and copies forwarded to the Base Environmental Office, for reporting purposes.

1.2.19 KEY PERSONNEL: Personnel who are important to the performance of this project are to be identified in the proposal for the contract. Provide detailed resumes for all proposed key personnel that demonstrate their capability to perform the specific tasks as described in the Statement of Work. Provide a key personnel matrix which includes a summary description of the education, background, experience and capability of all proposed key personnel as it relates to the Work Statement. The workforce must be sized to be able to handle the scope of the project. The key personnel workforce must contain welders, technicians, and cleaning personnel who meet the qualification requirements to perform the required procedures of the statement of work.

1.2.20 WEIGHT HANDLING: The contractor shall comply with specific activity regulations pertaining to crane safety and operation (including allowable access routes and ground loading limitations) and shall notify the KO or COR in advance of any cranes entering the activity, or of any multi-purpose machines, material handling equipment, or construction equipment that may be used in a crane-like application to lift suspended loads. The contractor is required to comply with applicable American National Standard Institute (ANSI) or ASME standards (i.e., ASME B30.5 for mobile cranes, ASME B30.22 for articulating boom cranes, ASME B30.3 for construction tower cranes, and ASME B30.8 for floating cranes, ASME B30.9 for slings, ASME B30.20 for below the hook lifting devices, ASME B30.26 for rigging hardware, and ANSI/ITSDF B56.6 for rough terrain forklifts). Cranes, machines, and rigging equipment at a naval activity, DoD activity, NAVFAC EXWC project site, or in a foreign country shall comply with the appropriate host country safety standards. Barge-mounted mobile cranes require a third party certification from an Occupational Safety and Health Administration (OSHA) accredited organization (or a third party certification from a state accredited organization for those states with OSHA approved state plans), a load indicating device, a wind

indicating device, and a marine type list and trim indicator readable in one-half degree increments. Third party certification is not required for barge-mounted mobile cranes at naval activities in foreign countries.

1.2.20.1 WEIGHT HANDLING CERTIFICATE OF COMPLIANCE: The contractor shall supply a certificate of compliance; reference (a), Appendix P, Figure P-1 that the crane (or other machine if used to lift suspended loads) and the rigging equipment meet applicable OSHA and ANSI/ASME regulations citing the OSHA and ANSI/ASME regulations which are applicable (e.g., cranes/multipurpose machines used in cargo transfer will comply with 29 CFR 1917; cranes/multi-purpose machines used in construction, demolition, or maintenance shall comply with 29 CFR 1926; cranes/multi-purpose machines used in ship building, ship repair, or ship breaking shall comply with 29 CFR 1915; slings shall comply with ASME B30.9, and rigging hardware shall comply with ASME B30.26). For cranes (or other machines used to lift suspended loads) and rigging equipment at naval activities in foreign countries, the contractor shall certify that the crane (or other machine) and the rigging equipment conform to the appropriate host country safety standards. The contractor shall also certify that all of its crane (or other machine) operators working on the naval activity have been trained not to bypass safety devices (e.g., anti-two block devices) during lifting operations. The certifications are required to be posted on the crane.

1.2.20.2 CRANE OPERATOR QUALIFICATION: For mobile and commercial truck mounted cranes with OEM rated capacities of greater than 2000 pounds, the crane operator is required to be qualified by a source that qualifies crane operators (i.e., a union, a government agency, or an organization that tests and qualifies crane operators). Proof of current qualification shall be provided. Operators of cranes used in construction at activities under U.S. jurisdiction follow the qualification and certification requirements of 29 CFR 1926.1427. The contractor is required to certify (in accordance with NAVFAC P-307 Management of Weight Handling Equipment, Appendix P, Figure P-1) that the operator is qualified and trained for the operation of the crane or machine to be used.

1.2.20.3 CRANE QUALIFICATION: Proof or authorization from the machine OEM that the machine is capable of making lifts of loads suspended by rigging equipment is required for all multi-purpose machines, material handling equipment, and construction equipment used to lift loads suspended by rigging equipment. The contractor is required to demonstrate that the equipment is properly configured to make such lifts and is equipped with a load chart.

1.2.20.4 HOOKS: All hooks used on cranes, hoists, other machines, and rigging gear are required to have self-closing latches or the throat opening will be "moused" (secured with wire, rope, heavy tape, etc.) or otherwise secured to prevent the attached item from coming free of the hook under a slack

condition. The following exceptions apply and will be approved by the contractor’s technical organization; items where the hook throat is fully obstructed and not available for manual securing and lifts where securing the hook throat increases the danger to personnel such as forge shop, dip tank, or underwater work.

1.2.20.5 CRITICAL LIFT PLAN: A critical lift plan is required for each of the following lifts:

a. Lifts involving hazardous materials (e.g., explosives, highly volatile substances);
b. Hoisting personnel with LHE;
c. Lifts made with more than one LHE;
d. Lifts where the center of gravity could change;
e. Lifts made when the load weight is 75% of the rated capacity of the LHE load chart or more (not applicable to gantry, overhead or bridge cranes);
f. Lifts without the use of outriggers using rubber tire load charts;
g. Lifts using more than one hoist on the same LHE;
h. Lifts involving Multiple Lift Rigging (MLR) Assemblies or other non-routine or technically difficult rigging arrangements;
i. Lifts involving submerged loads.
    1. Exception: lifts that were engineered to travel in guided slots throughout the lift and have fixed rigging and/or lifting beams, i.e., intake gates, tailgates/logs);
j. Lifts out of the operator’s view.
    1. Exception: if hand signals used by a signal person in view of the operator or radio communications are available and in use, load does not exceed two tons AND is determined a routine lift by the lift supervisor;
k. Load Tests;
l. When land-based LHE mounted on barges, pontoons or other means of flotation are required to travel while lifting the load. > See Sections 16.L.03 and 16.L.04.
m. Any lift the operator believes should be considered critical.

1.2.20.6 CRITICAL LIFT PLAN (CON’T): The Critical Lift Plan will include the following as applicable:

a. The size and weight of the load to be lifted, including crane (or other machine) and rigging equipment that add to the weight (The OEM's maximum load capacities for the entire range of the lift shall also be provided.)
b. The lift geometry, including the crane (or other machine) position, boom length and angle, height of lift, and radius for the entire range of the lift (This is applicable to both single and multiple crane/machine lifts.)
c. A rigging plan; showing the lift points, rigging equipment, and rigging procedures
d. The environmental conditions under which lift operations are to be stopped
e. For lifts of personnel, the plan shall demonstrate compliance with the requirements of 29 CFR 1926.1431

f. For barge mounted mobile cranes, barge stability calculations identifying crane placement/footprint; barge list and trim based on anticipated loading; and load charts based on calculated list and trim specific to the barge the crane is mounted on (The amount of list and trim shall be within the crane manufacturer’s requirements.)

g. For lifts in the vicinity of overhead power lines (i.e.; if any part of the crane or other machine; including the fully extended boom of a telescoping boom crane or machine; or the load could approach the distances noted in reference (a), Figure 10-3 during a proposed operation), the plan shall demonstrate compliance to 29 CFR 1926.1408-1411

1.2.20.7 WEIGHT HANDLING ACCIDENT NOTIFICATION: The contractor is required to notify the KO or COR as soon as practical, but no later than four hours after any WHE accident. The contractor is required to secure the accident site and protect evidence until released by the KO. The contractor is required to conduct an accident investigation to establish the root cause(s) of any WHE accident. Crane operations shall not proceed until cause is determined and corrective actions have been implemented to the satisfaction of the KO. The contractor is required to provide the KO, within 10 days of any accident, a Crane and Rigging Gear Accident Report using the form provided in Section 6 consisting of a summary of circumstances, an explanation of causes(s), photographs, and corrective actions taken.

1.2.20.8 SIGNAL PERSONS: The contractor is required to certify in the return proposal that signal persons used in construction work are qualified in accordance with 29 CFR 1926.1428.

END OF SECTION

SECTION 2

2. OPERATIONAL REQUIREMENTS: The hyperbaric facility is designed to perform the following operations and standards. **See Section 6 for schematics and figures.**

2.1 AIR SYSTEM: The air system shall be capable of providing a primary and secondary breathing and charging airline to the hyperbaric systems.

a. Storage Pressure: 5000 psig

b. Storage Configuration: Two (2) banks of 3 Flasks

c. Two (2)Compressor Charge Rate: 42 SCFM (ea)

2.2 OXYGEN SYSTEM: The oxygen system shall be capable of providing oxygen to the hyperbaric systems through the charging systems.

2.2.1 PRIMARY OXYGEN STORAGE:

a. Storage Pressure: 3000 psig

b. Storage Configuration: Two (2) XXX Cuft flasks

2.2.2 SECONDARY OXYGEN STORAGE:

a. Storage Pressure: 3000 psig

b. Storage Configuration: Two (2) banks of 4 Oxygen "K" bottles

2.3 NITROGEN GAS SYSTEM: The Nitrogen Gas (N2) System shall be capable of providing nitrogen gas to the hyperbaric systems through the charging systems.

2.3.1 NITROGEN GAS STORAGE:

a. Storage Pressure: 3000 psig

b. Storage Configuration: Two (2) banks of 2 Nitrogen "K" bottles

2.4 HELIOX GAS SYSTEM: The Heliox (HeO2) System shall be capable of providing heliox gas to the hyperbaric systems through the charging systems.

a. Storage Pressure: 3000 psig

b. Storage Configuration One (1) bank of 4 Heliox "K" bottles

END OF SECTION

SECTION 3

3. PIPING & INSTRUMENTATION TECHNICAL REQUIREMENTS

3.1 GENERAL REQUIREMENTS:

3.1.1 **"POWER PIPING":** Hyperbaric piping, valves and components shall conform to the requirements of ANSI B31.1, "Power Piping". This specification refers to paragraphs in B31.1. The referenced B31.1 paragraph numbers are followed by an asterisk for identification purposes (illustration, "Paragraph 100.1.1*"). The piping, valves and components shall conform to the following additional requirements.

3.1.2 **PIPING**: Paragraph 100.1.1* "This code prescribes minimum requirements for the design, material, fabrication, erection, test, and maintenance of piping systems." “Piping" is defined in paragraph 100.1.1*; pipe, flanges, bolting gaskets, valves, relief valves, and the pressure containing portions of other components. Whenever pipe is stated in this specification in general terms, it shall be assumed to state a requirement for all pipe and tube used.

3.1.3 **PROVEN COMPONENTS**: Pressure containing components shall have been proven satisfactory by successful performance under comparable US NAVY service conditions. Components for a hyperbaric facility must have proven experience in existing hyperbaric facilities for high and low pressure air, oxygen and water service. Pressure vessels (other than the PVHO's) shall meet the requirements of ASME, Section VIII, Division 1 or other as specified.

3.1.4 **MATERIAL & COMPONENTS, GENERAL**: Material, components and equipment installed in the piping systems shall be as specified and suitable for the gasses and liquids contained and for the maximum operating temperature and pressure. All valves shall be placed so that they can be easily reached, operated and maintained by a person without extensive system disassembly or the aid of special equipment, such as ladders, or they shall be provided with other means of mechanical operation. Valves shall be placed so that accompanying gauges or other displays are easily read. Pipe and tubing shall be protected from abuse and accidents and be placed for ease of operation, maintenance and replacement.

3.1.5 **CALIBRATION**: All measuring instruments, gauges, relief valves, process control transmitters, indicators, etc., requiring calibration shall have at least twelve months remaining on their respective calibration at the time of the acceptance of the facility. All calibration shall be conducted by a METCAL certified calibration shop.

3.1.6 **MATERIAL PROTECTION**: Equipment and materials shall be properly stored, adequately protected and carefully handled to prevent contamination or damage before and during installation. Equipment and materials shall be installed, handled, stored and protected in accordance with the manufacturer's recommendations.

3.1.7 PERSONNEL PROTECTION: Belts, pulleys, chains, gears, couplings, projecting setscrews, keys and other rotating parts located so that any person can come in close proximity thereto shall be fully enclosed or properly guarded. High temperature equipment and piping so located as to endanger personnel or create a fire hazard shall be properly guarded or covered with insulation. Areas of high noise shall be properly posted and adequate safety equipment shall be supplied.

3.1.8 MANUFACTURER INSTRUCTIONS: Where installation procedures or any part thereof are required to be in accordance with the recommendations of the manufacturer of the material being installed, printed copies of these recommendations shall be furnished to the COR with the Preliminary Design Submittal. Installation of the product shall not be allowed to proceed until the recommendations are received. Failure to furnish these recommendations can be cause for rejection of the material.

3.1.9 O-RING SEALS: All piping components such as valves, check valves, relief valves, reducers, and similar equipment, shall be installed with O-ring seal unions.

3.1.10 CHASES: All piping and electrical conduit shall run in chases. The chases shall be located so that they do not interfere with operations or maintenance. In Hyperbaric operating spaces the piping, conduit and chases shall be run so as to be of minimal presence to the operators and chamber occupants. The contractor’s design shall conform to component manufacturers' requirements.

3.1.11 PIPING, GENERAL: There shall be adequate joints for disassembly, cleaning and inspection. Single lengths of piping shall not exceed 30 feet between unions. All piping installed internal to the chamber shall be configured so as to not interfere with normal operations.

3.1.12 PIPING SIZE: Piping shall be sized to a maximum gas velocity of .8 mach or less.

3.1.13 WELDED PIPING AND FITTINGS: Piping, unless otherwise specified, shall be seamless annealed stainless steel conforming to ASTM A312, Type **316L**. Pipe shall be 1/2" or larger. All tube, unless otherwise specified, shall be seamless annealed stainless steel conforming to ASTM A269, Type **316L**. All fittings shall conform to ASTM A403, Type **316L** and shall be seamless. Tube shall be 1/2" I.D. or larger, except gauge and sampling lines which will be 1/4" or larger. All Piping (pipe, tube, and fittings) located in areas external to the building shall be 316 or 316L. Traceability details (heat numbers etc.) shall be etched or permanently marked on all piping (pipe, tube, fittings, tailpieces, threadpieces, etc.).

3.1.14 PIPE MATERIAL CERTIFICATIONS: The contractor shall submit material certifications for all weld filler metal (wire, rods, etc.), pipe and fittings used in this contract. The material certifications shall ensure that the pipe, fittings and filler meet all specification requirements. The material certifications shall include, but are not limited to: complete analysis

(chemical element percentage composition), mechanical physical properties including tensile, yield, elongation, and manufacturer and manufacturing details. Vendor supplied purchase orders, Vendor Certificates of Conformance (C of C) and Mill Certs for welded pieces shall accompany all piping (pipe, tube, valves and fittings) IAW US Navy System Certification Manual, SS521-AA-MAN-10.

3.1.15 **JOINT STANDARDS**: Only pipe joints that are fabricated, erected, tested and inspected to nationally accepted standards may be used (typically; butt welds, socket welds, bolted flange connections, O-ring faced fittings). Others are not acceptable (typically; brazed, byte type, flared, compression fittings and threaded).

3.1.16 **FLEX HOSES**: Flexible hoses shall be installed at reciprocating machinery. When a flexible hose is to be subjected to considerable vibration or flexing, sufficient slack shall be provided to avoid mechanical loading. Flexible hose burst pressure shall be four times operating pressure. Flexible hoses shall be installed so that operators of the equipment are not endangered in case of failure. All flexible hoses installed shall be labeled with a metal information tag according to the requirements in the NAVSEA S6430-AE-TED-010. All flex hoses shall have an independent identification number etched on the metal identification tag and on one of the end fittings. This identification number shall correspond to all documentation related to the respective flex hose (hydrotest, cleaning, etc.) All flexible hoses shall be subjected to a hydraulic proof test equal to twice the rated working pressure of the hose (See NAVSEA S6430-AE-TED-010). All flexible hoses shall be covered with non-corrosive stainless steel wire braid. All fittings shall be constructed of non-corrosive stainless steel.

3.1.16.1 **FLEX HOSE RESTRAINER**: All flex hoses shall have restrainers (Safety Lines), fabricated in accordance with the U.S. Navy Diving Manual. Safety lines shall be provided for the full length of each flex hose assembly; securely fastened at both ends. In the case of charging whips, the manifold end shall be securely fastened. The working end shall have a device for securing the line to the cylinder.

3.1.17 **FITTINGS ID**: The inside diameter of elbows, tees and other fittings shall be equal to or greater than the pipe to which they are attached.

3.1.18 **PIPING COLOR CODING**: Identify piping in accordance with the table listed below. Identification shall apply to piping on each segment of pipe between fittings. All valve handles, operator controls and gauge outer rings shall have color coding applied. Provide two copies of the piping identification code framed under glass or acrylic and installed where instructed by the COR.

Piping Identification

System	Color
Helium	Buff
Oxygen	Green

Helium-Oxygen Mix	Orange
Nitrogen	Light Gray
Nitrogen Oxygen Mix	Orange
Exhaust	Silver
Air	Black
Chilled Water	Blue & White
Hot Water	Red & White
Potable Water	Blue
FES	Red

3.1.19 COMPONENT TAGS: All components shall be tagged with identification plates of plastic laminate measuring approximately ½ inch high, by 1 ½ inches long minimum, by 1/8 inch thick, firmly attached by contact adhesive or by other means acceptable to the Government. These plates shall be marked by engraving with ¼ inch high block type identification letters/numbers, and shall be color coded as appropriate. The Component Tag index shall be submitted with the Preliminary Design. Other means of tagging may be used, but must be approved by the COR.

3.1.20 COMPONENT ID PLATES: On the component identification plates, the following naming convention shall be used throughout the system and sub-systems. The first set of symbols shall identify the component; the second set shall identify the system; and the third set shall indicate the number of that component in the system. For example, BV-ALP1-3 indicates that the component is a ball valve in the Air Pressurization System and that it is a ball valve #3. This alphanumeric sequence will start at the High Pressure source and continue through to the last Low Pressure component or fixture. The following tables list the abbreviations for components and systems.

Components

Abbreviation	Name
AC	Air Compressor
AP	Air Purifier/Drier
3BV	Three Way Ball Valve
GCV	Gauge Calibration Valve
BV	Ball Valve
CV	Check Valve
FL	Filter
GV	Globe Valve
HF	High Pressure Flask
MS	Moisture Separator
NV	Needle Valve
PG	Pressure Gauge
PR	Pressure Regulator
RV	Relief Valve
VT	Volume Tank
PS	Pressure Switch
SV	Solenoid Valve
SCV	Stop Check Valve
QD	Quick Disconnect
FH	Flex Hose

EBV	Electric Ball Valve
M	Muffler

Systems

Abbreviation	Name
AHP1	High Pressure Air Bank #1
ALP1	Low Pressure Air Bank #1
AHP2	High Pressure Air Bank #2
ALP2	Low Pressure Air Bank #2
OX	Oxygen System
SG	Specialty Gas System
NS	Nitrogen System
NX	Nitrogen-Oxygen System

3.1.21 **PANEL ID TAGS**: All panels and major subsystems shall be identified with an ID plate. These plates shall be made of plastic laminate, two inches high and at least six inches long by one-eighth inch thick. The plates shall be marked by engraving with three-quarter inch high block type identification letters/numbers, and shall be color coded as appropriate. All piping entering/leaving a panel shall be identified. These plates shall be made of plastic laminate, 1 1/2 inches high and at least four inches long by one-eighth inch thick. The plates shall be marked by engraving with ½ inch high block type identification letters/numbers, and shall be color coded as appropriate. These labels shall be firmly attached by contact adhesive or by other means acceptable to the Government. ID tag wording shall be provided with the Preliminary Design. Other means of tagging may be used, but must be approved by the COR.

3.1.22 **TUBING GUIDELINES**: There shall be a length of straight tubing adjacent to the nut equal to 2 tube diameters or more. The total length of a tube assembly shall be 20 tube diameters or more. Each tube assembly shall have at least one bend equal to or greater than 90°.

3.1.23 **THROTTLE VALVES**: All valves that regulate flow (other than on-off function), oxygen service valves, and high pressure valves (except for those remotely actuated) are considered throttle valves. They shall be globe or needle valves. These valves shall conform to MIL-V-24109. For throttle valves which are larger than those that meet the requirements of MIL-V-24109 (3" or greater), these valves shall conform to MIL-V-24109 with respect to control of flow and pressure. Valve Handles shall be color coordinated with the color code requirements of paragraph 3.1.18.

3.1.24 **SHUTOFF VALVES**: All hand operated valves, other than throttling valves, shall be ball valves. They shall be two-way (bi-directional) flow, three piece, with a swing out construction, valves conforming to ASME/ANSI B-16.34 and utilizing a soft sealing surface. Socket weld end connections shall conform to ANSI B-16.11. Butt weld end connections shall conform to ANSI B-16.25. The construction materials shall be compatible with air and oxygen service. All valves shall be rated at a working pressure equal to or greater than 1 ½ times maximum possible

system pressure. On panels, in which the direction in which the valve handles point indicates the open or closed position, the direction shall be the same for all valves on the panel. Valve Handles shall be color coordinated with the color code requirements of paragraph 3.1.18.

3.1.25 **COMPONENT SEATS**: Breathing gas components shall have seats and seals that are suitable for oxygen service.

3.1.26 **LUBRICANTS**: All lubricants shall be suitable for oxygen service IAW MIL-STD-1330D.

3.1.27 **CHECK VALVES**: All check valves shall utilize a soft sealing surface poppet or disc and spring.

3.1.28 **PRESSURE GAUGES**: Pressure gauges, except as otherwise specified, shall have a 4 1/2 inch dial and shall meet the following criteria:

a. Unless otherwise specified, shall be made with phosphor bronze or stainless steel, with helical coil or bourdon tube sensing elements.
b. The case shall be made of acrylonitrile butadiene styrene plastic and shall have a blowout relief device.
c. Oxygen gauges shall be cleaned and marked for oxygen service.
d. Oxygen gauges shall have a green outside case.
e. Each gauge shall be capable of isolation from the system by a three-way gauge calibration valve, which meets the requirements of MIL-V-24578, and snubber assembly.
f. They shall have an accuracy of 1% full scale unless otherwise specified.

3.1.29 **GAUGE RANGE**: The full range of pressure gauges shall be 130% to 150% of the maximum operational range.

3.1.30 **VENT LINES**: Vent lines shall be independent of each other and of other lines. All vent lines shall exhaust outside the building, and shall be so configured and capped to prevent ingress of weather or debris. They shall be designed to provide lightning protection.

3.1.31 **RELIEF VALVES:** Relief valves installed on PVHO and on ASME air storage flasks shall conform to and be marked and stamped in accordance with ASME Section VIII, Division 1, "Pressure Vessels". Non ASME coded relief valves shall be installed on systems other than PVHO's and ASME storage flasks. Relief valves shall be located so that the exhaust port is not nearer than 5 feet from operators; the vented gas shall be directed away from operators. Relief valves for piping greater than 1" NPT and for oxygen shall be piped outdoors. All non-ASME coded relief valves shall be adjustable-type relief valves.

3.1.32 **REDUCTION STATIONS**: Pressure regulating station components shall be selected so that output pressure will not drop below 90% of nominal set pressure for all conditions of flow and upstream pressure; and, maximum flow requirements shall be met under all conditions of upstream pressure and flow. Minimum upstream pressure shall be three times downstream pressure. Provide each

pressure reducing station with a regulator, a filter upstream of the regulator, gauges to show the supply pressure, reduced pressure and a safety relief valve on the low pressure side with sufficient capacity to relieve the high pressure. Pressure regulators shall be capable of operating within a temperature range of 32 to 165 degrees Fahrenheit. All dome-loaded regulators shall be provided with appropriate hand loaded regulators for the adjustment of the reduced pressure downstream of the dome-loaded regulator. The exception shall be for the Scuba charge system dome loader, which shall have no hand loader and shall be set to 3300 psi. The exception for filters shall be that no filters shall be provided for maintenance panel or drive air panel regulators. All regulators shall be provided with straight thread o-ring fitting end connections.

3.1.33 **FILTERS**: Filters shall be provided preceding all pressure regulators, except as noted in the specification or drawings. A filter shall be provided downstream of all externally supplied supply banks ("K bottle banks for oxygen, nitrogen, etc., Liquid oxygen, Liquid nitrogen, etc.) and preceding all dome loaded regulators. All filters, unless otherwise specified, shall be fabricated in accordance with ASME Section VIII Div I, and shall be capable of changing the filter element without removing the filter body from the line. It shall be capable of removing particulate larger than 10 microns unless otherwise specified. Filters shall be sized so that the pressure drop across a clean filter is not more than 2.5 percent for LP systems (500 psi and less) or not more than 15 psi for HP systems (500 psi and more) of the specified minimum inlet pressure to the regulator at maximum flow rate specified for the regulator. All filters shall be provided with straight thread O-ring fitting end connections. In an oxygen system, all components of a filter shall be manufactured using brass. In air systems, all components of the filter shall be manufactured using stainless steel.

3.1.34 **UNIONS:** Unions shall be installed in the piping and each end of the flexible hoses to facilitate removal and maintenance of components.

3.1.35 **CONSOLES**: The surfaces of consoles that are viewed by operators shall be non-reflective.

3.1.36 **PANELS:** Control Console’s and Control Panels for hyperbaric systems shall be constructed in a panel mount configuration, with the component bodies behind the panel, and only displays or operating mechanisms exposed. **All other panels** shall be constructed in an "exposed component, surface mounted" configuration. Panels and mounting brackets shall be fabricated of aluminum. The panels shall be manufactured of a minimum of ¼ inch plate. The exposed panel surface and all brackets shall be powder coated to the required color of the panel service after fabrication. The support brackets used to support the pipe and components shall also be powder coated after fabrication. All components on the panel shall be independently supported (pipe shall not be used to support components). Panels that cannot be supported due to their weight shall be supported with leg supports that adequately support the weight of the panels.

3.1.37 **WELD JOINT INTERIOR**: Paragraph 111* Welded Joints-The finished interior surface of pipe joints shall be smooth in order to reduce noise in the test piping. Backing rings, if used, shall be removed. There shall be no excess reinforcement on the inside of pipe joints caused by the welding process. Machine welding or consumable inserts shall be used in the welding process to avoid any excess reinforcing of the weld. The contractor shall provide a detail description of the weld process in the Preliminary Design.

3.1.38 **WELDING QUALIFICATIONS**: Paragraph 127.5* Qualification. All welders, welding procedures, and procedures shall be qualified by the contractor prior to welding on this project. Qualification by a previous employer is unacceptable. The following documents shall be submitted by the contractor:

a. QW-482 Welding Procedure Specification
b. QW-483 Procedure Qualification Record
c. QW-484 Welder or Welding Operator Qualification Test

3.1.39 **WELD IDENTIFICATION:** All welds shall have weld identification symbols etched on the pipe base metal adjacent to the respective weld. All etched weld numbers shall correspond to the welder log and Joint Identification Drawing (JID). The welders log and JID shall be submitted by the contractor. The welders log and JID shall contain sufficient information to cross reference between all welding qualifications, welding records, non-destructive testing (NDT) qualifications, and NDT records.

3.1.40 **COMPONENT SUPPORTS**: Pipe and/or tubing shall be adequately supported at intervals no greater than 100 pipe diameters, and in both directions at elbows. Components (valves, regulators, etc.) shall be supported so that the force required to operate the component or other normal operational load does not cause visual deflection, rotation or vibration. All piping that is currently installed that will not be removed shall be properly supported.

3.1.41 **CONTAMINATION**: Precautions shall be taken during fabrication to prevent construction dirt from entering pipe in storage or partially completed piping systems.

3.1.42 **MACHINERY FOUNDATIONS**: Reciprocating machinery shall be on independent foundations, with sound isolation mounts.

3.1.43 **COMPRESSOR GROUNDING:** Each compressor shall be grounded. Where a ground strap is provided at the isolation pad, the contractor shall connect the compressor to this strap. If no ground strap is provided, the contractor is responsible for installing such ground strap, and grounding the compressor.

3.1.44 **ALARMS**: Alarms shall be aural and visual. Visual displays shall be LED and press to test. Each aural alarm shall have a manual shut-off. Illuminated visual alarms and displays shall be grouped as safety related or informational. Safety related alarms and displays shall be GREEN, indicating a safe condition; or RED, indicating an unsafe condition. Informational

illuminated visual displays shall be WHITE. They shall indicate data such as "OPEN", "SHUT", etc.

3.1.45 **OXYGEN SYSTEMS**: Oxygen piping shall conform to the requirements of CGA Pamphlet G-4.4, "Industrial Practices for Gaseous-Oxygen Transmission and Distribution Piping Systems". The following are noted:

a. Pipe and fittings shall be stainless steel ASTM 316L.

b. All valves, regulators and other components shall be copper based alloy. All oxygen system valves shall meet the requirements for throttle valves as specified in paragraph 3.1.23.

c. Pipe joints shall be butt welded.

d. Vent lines shall be independent of other lines and shall vent outdoors. The vent line for venting oxygen shall be cleaned as required by this specification.

e. The oxygen vent shall be properly isolated from weather, combustibles, personnel, other systems and air compressor intakes.

f. Components for oxygen systems shall not react with oxygen nor fluorinated compounds in any way that might cause generation of heat or loss of oxygen to the surrounding atmosphere. Such components shall utilize polytetra fluoroethylene (Teflon), or fluoroethylene (Viton) seals and gaskets. All other wetted parts shall be stainless steel or as otherwise specified.

g. Gauge and sampling piping provided in oxygen systems which are ¼ inch tube may have pipe joints which are socket welded. Gauge and sampling piping lengths and the amount of socket weld fittings shall be kept to a minimum.

h. All oxygen piping shall be grounded.

i. All filter elements and housings shall be manufactured of bronze or monel.

3.1.46 **NON-DESTRUCTIVE EXAMINATION:** Mandatory minimum non-destructive examination of welds shall conform to the requirements of Table 136.4* and the following.

WELD TYPE	PARAMETERS	EXAMINATION
Butt Weld	P > 1000 psi Dia. > 2" P < 1000 psi and Dia. < 2"	RT RT MT or PT
Welded Branch Connections	P > 1000 psi Dia. > 2" P < 1000 psi and Dia. < 2"	RT RT MT or PT

Fillet, Socket Welds	All Sizes and Pressures	MT or PT

NOTES:

a. Welds shall be given a visual examination in addition to the examination specified above. Acceptance standards for visual examination shall be those of American Welding Society, D1.1, paragraph 8.15.1, "Quality of Welds".

b. RT=Radiographic Exam (paragraph 136.4.5*)

c. PT=Liquid Penetrant Exam (paragraph 136.4.4*).

d. MT=Magnetic Particle Exam (paragraph 136.4.3*).

3.1.47 SYSTEM CLEANING: Pipe that contains gases that will be breathed by humans shall be cleaned.

a. The contractor shall be responsible for cleaning all new piping and components, and any existing piping and components on which work is performed, to the nearest disassembly joint. Equipment, materials, instruments, personnel and laboratory services required for cleaning and certification shall be provided by the contractor.

b. The contractor shall submit their cleaning procedures to the government. Procedures for cleaning the air system must be consistent with MIL-STD-1330D. The use of organic solvents as a cleaning agent is prohibited.

c. Components which are certified clean upon delivery by the manufacturer will not require cleaning if the integrity is not violated. Components which have been shop tested and certified for cleanliness shall be bagged and removed from the system during cleaning operations. Systems may be cleaned as a whole or in sections provided all clean piping is kept isolated and free of contamination after cleaning.

d. An air gas sample shall be taken from the discharge of each air supply which will be breathed by humans. The total amount of gas samples taken shall ensure that there is analysis of the entire system. An additional sample shall be taken at one of the compressor air inlets. Samples shall be taken after hydrotesting, cleaning and assembly. Air purity shall meet or exceed the standards stated in the U.S. Navy Diving Manual (NAVSEA SS521-AG-PRO-010), Table 4-1, 4-2, 4-3, 4-4, or 4-5. Dew point analysis shall be conducted that confirms that less than -40°F air is being supplied by the compressors.

e. Gas samples shall be taken at the discharge of all other pipe gas supplies which may be breathed by humans (oxygen, nitrox, heliox,) or used for mixing of breathing supplies (nitrogen, helium, etc.). The total amount of gas samples taken shall ensure that there is analysis of the entire system. Samples shall be taken after hydrotesting, cleaning and assembly. Purity shall meet or exceed the standards stated in the U.S. Navy Diving Manual (NAVSEA SS521-AG-PRO-010), Table 4-1, 4-2, 4-3, 4-4, or 4-5.

f. Oxygen system cleaning procedures and gas sample requirements must comply with the requirements of MIL-STD-1330D.

g. All gas samples shall be tested for the presence of unacceptable levels of all agents used in cleaning. An unacceptable level is any level less than $1/10^{th}$ the maximum OSHA eight (8) hour exposure level for any constituent in the cleaning material.

h. If liquid cleaning solutions are used requiring final H_2O rinse, the final rinse solution shall be sampled to insure cleaning agents do not remain in the system.

3.1.48 **HYDROSTATIC TEST**: Paragraph 137* - Leak Test. Piping shall be hydrostatically strength tested to 1-1/2 times the design pressure.

3.1.49 **GAS LEAK TEST**: A gas leak test shall be conducted after the hydrostatic strength test. The test shall be conducted with air unless otherwise specified. The maximum test pressure shall be the Maximum Operating Pressure. The gas pressure shall be permitted to stabilize as a result of temperature change. All possible sources of pressurization and volume storage (tanks, etc.) shall be isolated from the system. High pressure piping and low pressure piping in systems shall be tested independently. The maximum test pressure shall be safely brought to maximum operating pressure and held. After allowing for equalization, a bubble test will be performed. The pressure will then be brought to low pressure (50 psi) and left for an extended period of at least 3 hours. The pressure shall not drop.

3.2 SPECIFIC REQUIREMENTS:

3.2.1 PURFICATION AND DRYER PACKAGE:

3.2.1.1 AIR PURIFIERS AND DRYERS: The contractor shall install Two (2) purifier and dryer packages as described below. The purifiers and dryers shall be installed in the Compressor Room. Each dryer shall be associated with a particular compressor, taking the place of the existing dual tower-type dryer and purifier system. An alarm system shall be installed that notified operators when cartridges are ready to be replaced.

3.2.1.2 DRYER/PURIFIER:

a. **DRYER**: The dryer shall be a coalescer type moisture separator with a 0.1 micron filtration efficiency of 99.9999%. The dryer shall be capable of maintaining the Dew point of compressed air at less than -40 degrees Fahrenheit. The dryer shall be compatible with the existing compressor and rated for the maximum output pressure and its flow rate.

b. **AIR PURIFIER:** An air purification system capable of providing air as specified in U.S. Navy Diving Manual (NAVSEA SS521-AG-PRO-010), Table 4-1 shall be provided. The purification system shall utilize replaceable cartridge filter elements and shall be capable of processing approximately **230,000 ft^3** of air per cartridge set. The design of the cartridge pressure chambers shall eliminate the possibility of operating the system without purification cartridges installed or with improperly installed cartridges. It shall have an electronic purification monitor with warning light indicator which activates prior to cartridge exhaustion, and which will automatically shut down the compressor when the cartridge is exhausted. Components shall have a working pressure of at least 5,000 psig. The purification chambers shall conform to ASME Code for unfired pressure vessels, Section VIII, Division 1.

3.2.2 PURIFIER PANEL:

3.2.2.1 The Purifier Panel shall be demolished in its entirety, including the purifier selector switch. The materials shall be left for SDVT1 personnel to review (to see if they have a use for them) before it is removed from the site.

3.2.2.2 The following flex hoses shall be replaced “in-kind” as described in paragraph 1.1.10: **FH-AHP-21** and **FH-AHP-22.** These flex hoses are Process Controls 3/8” in diameter and 18 inches in length.

3.2.2.3 The contractor shall fabricate new piping from each new compressor to the Gas Distribution Panel. The piping shall start with the “in kind” replacement of the two compressor flex hoses (as above) and terminate with a connection into the Gas Distribution Panel that currently says “From Purifier Panel”. New tags shall be procured stating appropriately “From Compressor #1” and “From Compressor #2”.

3.2.2.4 **SCV-AHP1 and SCV-AHP-2:** These valves are Mil-STD-24109 Stop Check Valves. The contractor shall overhaul these valves to "As-New Condition".

3.2.2.5 All O-rings associated with piping, from the discharge from each of the two (2) compressors and two (2) purifiers to the Gas Distribution Panel shall be replaced "in-kind" as described in paragraph 1.1.10.

3.2.3 **GAUGE RING REPLACEMENT:** The contractor shall replace up to twenty (20) cracked gauge rings at SDVT1. The rings will be "in kind" to the existing rings.

3.2.4 **AIR BANK PANELS AND FLASKS:** This includes Air Banks #1 and #2.

3.2.4.1 The following valves associated with the Gas Farm Air Systems shall be overhauled to "as new" condition as described in paragraph 1.1.9:

a. **NV-AHP1-4, NV-AHP2-4:** These valves are ½" MIL-STD-24109 needle valves.
b. **GV-AHP1-1, GV-AHP1-2, GV-AHP1-3, GV-AHP2-1, GV-AHP2-2, GV-AHP2-3:** These valves are ½" MIL-STD-24109 globe valves.
c. **RV-AHP1-1** and **RV-AHP2-1.** These ASME stamped relief valves are Fluid Mechanics Model 40331-3350-S16
d. **GCV-AHP1-1** and **GCV-AHP2-1**. These gauge calibrations valves are CPV model 980.
e. **NV-AHP1-1, NV-AHP2-1, NV-AHP1-2, NV-AHP2-2, NV-AHP1-3, and NV-AHP2-3:** These valves are ¼" MIL-STD-24109 needle valves.

3.2.4.2 **FLASKS:** Each of the six flasks shall be inspected in accordance with TM CHENG/05-010-SCA (Hyperbaric Facility Pressure Vessels). Test plans shall be prepared and submitted by the contractor to the COR. Each flask has a Maximum Allowable Working Pressure (MAWP) of 5500 psi and has a floodable volume of 25 cubic feet. Inspection plans are to be submitted to the COR. The condition of the flasks shall be submitted in a report submitted with the As-Built Submittal. This report shall report all UT thicknesses for each vessel and any other data revealed from the inspections. The report shall have an Executive Summary that summarizes all finds of the inspections and any recommended actions.

3.2.4.3 All O-rings associated with the Gas Farm Air Systems up to the first valve on the Gas Distribution Panel shall be replaced "in-kind" as described in paragraph 1.1.10.

3.2.5 **AIR DISTRIBUTION PANEL:**

3.2.5.1 The following valves associated with the Gas Distribution Panel shall be overhauled to "as new" condition as described in paragraph 1.1.9:

a. **GV-AHP-7, GV-AHP-8, GV-AHP-9, GV-AHP-10, GV-AHP-11, GV-AHP-12, GV-AHP-14, GV-AHP1-5, GV-AHP1-6, GV-AHP1-7, GV-AHP1-8,**

GV-AHP2-5, GV-AHP2-6, GV-AHP2-7, and GV-AHP2-8. These valves are ½″ MIL-STD-24109 globe valves.

b. **CV-AHP1-1** and **CV-AHP2-1**. These valves are ½″ CPV check valves.

c. **GCV-AHP-2, GCV-AHP-3, GCV-AHP-4, GCV-AHP-5, GCV-AHP1-2, GCV-AHP1-3, GCV-AHP1-4, GCV-AHP1-5, GCV-AHP2-2, GCV-AHP2-3, GCV-AHP2-4,** and **GCV-AHP2-5**: These gauge calibrations valves are CPV model 980.

3.2.5.2 All O-rings associated with piping, on the Gas Distribution Panel shall be replaced "in-kind" as described in paragraph 1.1.10.

3.2.6 TRUCK FILL PANEL:

3.2.6.1 The following valves associated with the Truck Fill Panel shall be overhauled to "as new" condition as described in paragraph 1.1.9:

a. **GV-AHP-13**: This valve is a ½″ MIL-STD-24109 globe valve.

b. **CV-AHP-1**: This valve is a ½″ MIL-STD-24109 check valve.

c. **GCV-AHP-1**: These gauge calibrations valves are CPV model 980.

3.2.7 OXYGEN SUPPLY PANELS AND OXYGEN BANK PANELS:

3.2.7.1 The following valves associated with the Oxygen supply panels and Oxygen Bank Panels #1 and #2 shall be overhauled to "as new" condition as described in paragraph 1.1.9:

a. **GV-OX-1, GV-OX-2, GV-OX-3, GV-OX-4, GV-OX-5, GV-OX-6, GV-OX-7, GV-OX-8, GV-OX-9 and GV-OX-10**: These valves are ½″ MIL-STD-24109 globe valves.

b. **NV-OX-1, NV-OX-2, and NV-OX-10**: These valves are 1/4″ MIL-STD-24109 needle valves.

c. **GCV-OX-1, GCV-OX-2, GCV-OX-3, GCV-OX-4, GCV-OX-5,** and **GCV-OX-6**: These gauge calibrations valves are CPV model 980.

d. **SCV-OX-1, SCV-OX-2, SCV-OX-3, SCV-OX-4, SCV-OX-5, SCV-OX-6,** and **SCV-OX-7**: These are ½″ Mil-STD-24109 stop check valves.

3.2.7.2 The following components associated with the Oxygen supply panels and Oxygen Bank Panels shall be replaced "in kind" as described in paragraph 1.1.10 or as otherwise described:

a. **FL-OX-1**: The oxygen filter shall be replaced with a brass or bronze based model and shall meet the requirements of Sections 3.1.33 and 3.1.45.

b. The contractor shall replace flex hoses **FH-OX-28 through FH-OX-35 and FH-OX-36.** The flex hoses shall be "in kind" to the existing hoses.

3.2.7.3 HARD PIPE TO OXYGEN FLASKS: The contractor shall provide piping to the existing oxygen flasks in the Gas Farm. The piping shall meet the requirement of Section 3.1

3.2.7.4 All O-rings associated with the BIBS Oxygen Panel, from the inputs (8) of the panel to the first valve on the BIBS

Reduction Panel shall be replaced “in-kind” as described in paragraph 1.1.10.

3.2.8 NITROGEN DISTRIBUTION PANEL AND NITROGEN BANK PANELS:

3.2.8.1 The following valves associated with the Nitrogen Distribution Panel and Nitrogen Bank Panels shall be overhauled to “as new” condition as described in paragraph 1.1.9:

a. **GV-N2-1, GV-N2-2,** and**, GV-N2-3**: These valves are ½” MIL-STD-24109 globe valves.
b. **NV-N2-1 through NV-N2-6** – These are valves are ½” MIL-STD-24109 needle valves.
c. GCV-N2-1, GCV-N2-2, GCV-N2-3, and GCV-N2-4. These gauge calibrations valves are CPV model 980.
d. **FL-N2-1 and FL-N2-2:** This is a Norman Filter model 4545GG-10DL
e. **SCV-N2-1:** This is a ½” Mil-STD-24109 Stop Check Valve.

3.2.8.2 The following components associated with the Nitrogen Distribution Panel and Nitrogen Bank Panels shall be replaced “in kind” as described in paragraph 1.1.10:

a. The contractor shall replace flex hoses **FH-N2-1 through FH-N2-4**. The flex hoses shall be “in kind” to the existing hoses.

3.2.8.3 All O-rings associated with the Nitrogen Distribution Panel and Nitrogen Bank Panels, from the inputs of the panel to the first valve on the Nitrogen Workstation Panel and Nitrogen Transfer Panel shall be replaced “in-kind” as described in paragraph 1.1.10.

3.2.9 NITROGEN WORKSTATION PANEL:

3.2.9.1 The following valves associated with the Nitrogen Workstation Panel shall be overhauled to “as new” condition as described in paragraph 1.1.9:

a. **NV-N2-7** and **NV-N2-8:** These valves are ½” MIL-STD-24109 needle valves.
b. **PR-N2-1** and **PR-N2-2:** These regulators are Tescom model 26-1013-18-640.
c. **GCV-N2-5, GCV-N2-6,** and **GCV-N2-7:** These gauge calibrations valves are CPV model 980.

3.2.9.2 **QD-N2-1 and QD-N2-2**: The contractor shall replace these quick disconnects “in Kind” as described in paragraph 1.1.10.

3.2.9.3 **NEW RELIEF VALVES:** The contractor shall add relief valves to the Nitrogen Workstation Panel. The relief valves shall be added to each of the two charging lines, directly downstream from the pressure regulators. The relief valve associated with PR-N2-1 shall be set to 2500 psi. The relief valve associated with PR-N2-2 shall be set to 125 psi. The contractor shall provide all piping necessary to

provide these relief valves. The relief valves shall meet the requirements of Section 3.1.

3.2.9.4 The contractor shall replace **PG-N2-7** with a 250 psi gauge.

3.2.9.5 **NITROGEN WORKSTATION SUPPLY RECONFIGURATION:** The contractor will provide for a reconfigured supply to the Nitrogen Workstation Panel. The contractor will cut and cap the existing supply to the Nitrogen Workstation (that comes directly from the bottle supply in the Gas Farm). The contractor will then supply the workstation from a new valve installed downstream of the booster pump on the Nitrogen Transfer Panel as shown in Section 6.

3.2.9.6 All O-rings associated with the Nitrogen Workstation Panel, shall be replaced "in-kind" as described in paragraph 1.1.10.

3.2.10 NITROGEN TRANSFER PANEL AND PUMP:

3.2.10.1 The following valves and components associated with the Nitrogen Transfer Panel shall be overhauled to "as new" condition as described in paragraph 1.1.9:

a. **GV-AHP-39, GV-ALP-2, GV-N2-4,** and **GV-N2-5:** These valves are ½" MIL-STD-24109 globe valves.
b. **PR-AHP-15:** This regulator is Tescom model 26-1661-18-235
c. **RV-ALP-2:** This relief valve is a Fluid Mechanics model 40331-3310. The contractor shall also provide an exhaust averter that deflects exhaust from this relief valve away from the operators in accordance with Section 3.1.
d. **RV-N2-1:** This relief valve is a Fluid Mechanics model 40331-3310. The contractor shall reset the relief valve to 3300 psi. The contractor shall also provide an exhaust averter that deflects exhaust from this relief valve away from the operators in accordance with Section 3.1.
e. **TP-N2**-1: This booster pump is a Haskel model AGT-15/30/29068 and is GFE.
f. **GCV-AHP-33, GCV-ALP-5, GCV-N2-8,** and **GCV-N2-9:** These gauge calibrations valves are CPV model 980.
g. The contractor shall replace flex hoses **FH-ALP-2**, **FH-N2-5** and **FH-N2-6**. The flex hoses shall be "in kind" to the existing hoses.

3.2.10.2 All O-rings associated with the Nitrogen Transfer Panel and Pump, shall be replaced "in-kind" as described in paragraph 1.1.10.

3.2.11 SCUBA/SEEDS CHARGING PANEL:

3.2.11.1 The following valves associated with the SCUBA/SEEDS Charging Panel and manifold shall be overhauled to "as new" condition as described in paragraph 1.1.9:

a. **GV-AHP-20 and GV-AHP-21**: These valves are a ½" MIL-STD-24109 globe valves.
b. **NV-AHP-1, NV-AHP-3:** These valves are ½" MIL-STD-24109 needle valves.

c. **NV-AHP-2, NV-AHP-4,** and **NV-AHP-5:** These valves are ¼″ Mil-STD-24109 needle valves.
d. **CV-AHP-3**: This valve is a ½″ MIL-STD-24109 check valve.
e. **CV-AHP-2**: This valve is a ¼″ MIL-STD-24109 check valve.
f. **RV-AHP-1:** The contractor shall overhaul and reset the relief valve to 3300 psi. The contractor shall also provide an exhaust averter that deflects exhaust from this relief valve away from the operators in accordance with Section 3.1.
g. **FL-AHP-1:** The contractor shall clean and overhaul the sintered stainless steel filter element to "as-new" condition.
h. **GCV-AHP-11, GCV-AHP-12, GCV-AHP-13,** and **GCV-AHP-14**: These gauge calibrations valves are CPV model 980.

3.2.11.2 The following components associated with the SCUBA/SEEDS Charging Panel and manifold shall be replaced "in kind" as described in paragraph 1.1.10:

a. The contractor shall replace flex hose assemblies **FH-AHP-1 through FH-AHP-10**. The replacement assemblies shall include new SCUBA yokes. The yokes shall be provided with new dust caps. The existing flex hoses are 3000 psi working pressure Process Controls ¼″ diameter x 24″ in length.

b. The contractor shall replace flex hose assemblies **FH-AHP-11 through FH-AHP-20**. The replacement assemblies shall include new SCUBA yokes. The yokes shall be provided with new dust caps. The existing flex hoses are 3000 psi working pressure Process Controls 3/8″ diameter x 36″ in length.

c. The contractor shall replace Quick Disconnects **QD-AHP-1 through QD-AHP-10**, and **QD-AHP-21**. The existing quick disconnects are Tomco ¼″ model QC4-B-4F-K1-316-201. The adapters from the quick disconnects to the manifolds shall also be replaced "in kind" to the existing adapters.

d. The contractor shall replace Quick Disconnects **QD-AHP-11 through QD-AHP-20**. The existing quick disconnects are Tomco 3/8″ model QC4-B-4F-K1-316-201. The adapters from the quick disconnects to the manifolds shall also be replaced "in kind" to the existing adapters.

3.2.11.3 **RV-AHP-2:** The contractor shall remove this relief valve from service and cap the end fitting with a blank tailpiece. The blank shall meet all the requirements for piping in Section 3.1.

3.2.11.4 **SCUBA/SEED PANEL MODIFICATION**: The contractor shall tie into the air supply line before the SCUBA/SEED Charging Panel and run a new 5000 psi ½″ line tying into the existing location of **RV-AHP-3** as shown in Section 6.

a. The contractor shall remove **RV-AHP-3** from service to and use this location to tie in the new 5000 psi airline as show in Section 6.
b. The contractor shall install a new ½″ globe valve and ½″ needle valve as shown in Section 6.

c. The contractor shall replace **PG-AHP-14** with an 8000 psi gauge.

3.2.11.5 All O-rings associated with the SCUBA/SEEDS Charging Panel and manifold, from the Gas Distribution Panel to the end of the hoses shall be replaced “in-kind” as described in paragraph 1.1.10.

3.2.12 LP MAINTENANCE AIR PANEL:

3.2.12.1 The following valves associated with the LP Maintenance Air Panel shall be overhauled to “as new” condition as described in paragraph 1.1.9:

a. **GV-AHP-19:** This valve is a ½” MIL-STD-24109 globe valve.
b. **NV-ALP-1**: This valve is a ½” MIL-STD-24109 needle valves.
c. **PR-AHP-2**: This regulator is a Tescom Model 26-1017-18-640.
d. **GCV-AHP-10** and **GCV-ALP-1**: These gauge calibrations valves are CPV model 980.

3.2.12.2 The following components associated with the LP Maintenance Air Panel shall be replaced “in kind” as described in paragraph 1.1.10:

a. **QD-ALP-1, QD-ALP-2 and QD-ALP-3:** These quick disconnects are ½” Parker model SSH4-63Y.

3.2.12.3 All O-rings associated with the LP Maintenance Air Panel, shall be replaced “in-kind” as described in paragraph 1.1.10.

3.2.12.4 The contractor shall install a new relief valve on the panel. The relief valve shall be located between where the current QD-ALP-1 and NV-ALP-1. The relief valve shall be set to 165 psi. The new relief valve shall meet the requirements of Section 3.1

3.2.12.5 The contractor shall replace **PG-ALP-1** with a 250 psi gauge.

3.2.13 HP/LP MAINTENANCE PANEL #1:

3.2.13.1 The following valves associated with the HP/LP Maintenance Panel #1 shall be overhauled to “as new” condition as described in paragraph 1.1.9:

a. **GV-AHP-15 and GV-AHP-16:** These valves are ½” MIL-STD-24109 globe valves.
b. **NV-AHP-6 and NV-ALP-2**: These valves are ½” MIL-STD-24109 needle valves.
c. **PR-AHP-3 and PR-AHP-4**: These regulators are Tescom Model 26-1017-18-640.
d. **GCV-AHP-6, GCV-AHP-7,** and **GCV-ALP-2**: These gauge calibration valves are CPV model 980.

3.2.13.2 The following components associated with the HP/LP Maintenance Panel #1 shall be replaced “in kind” as described in paragraph 1.1.10:

a. **GV-AHP-41 through GV-AHP-48:** These valves are AMRON model SV B5000-48.

3.2.13.3 All O-rings associated with the HP/LP Maintenance Panel #1, shall be replaced "in-kind" as described in paragraph 1.1.10.

3.2.13.4 The contractor shall install a new relief valve on the panel. The relief valve shall be located between PR-AHP-4 and NV-AHP-6. The relief valve shall be set to 3300 psi.

3.2.13.5 The contractor shall install a new relief valve on the panel. The relief valve shall be located between PR-AHP-3 and NV-ALP-2. The relief valve shall be set to 500 psi.

3.2.14 HP/LP MAINTENANCE PANEL #2:

3.2.14.1 The following valves associated with the HP/LP Maintenance Panel #2 shall be overhauled to "as new" condition as described in paragraph 1.1.9:

a. **GV-AHP-17 and GV-AHP-18:** These valves are ½" MIL-STD-24109 globe valves.
b. **NV-AHP-7, NV-ALP-3,** and **NV-ALP-4**: These valves are ½" MIL-STD-24109 needle valves.
c. **PR-AHP-5 and PR-AHP-6**: These regulators are Tescom Model 26-1017-18-640.
d. **GCV-AHP-8, GCV-AHP-9,** and **GV-ALP-3**: These gauge calibration valves are CPV model 980.

3.2.14.2 All O-rings associated with the HP/LP Maintenance Panel #2, shall be replaced "in-kind" as described in paragraph 1.1.10.

3.2.14.3 The contractor shall install a new relief valve on the panel. The relief valve shall be located between PR-AHP-6 and NV-AHP-7. The relief valve shall be set to 3300 psi.

3.2.14.4 The contractor shall install a new relief valve on the panel. The relief valve shall be located between PR-AHP-5 and NV-ALP-3. The relief valve shall be set to 500 psi.

3.2.15 O2 TRANSFER PANEL:

3.2.15.1 The following valves associated with the O2 Transfer Panel shall be overhauled to "as new" condition as described in paragraph 1.1.9:

a. **GV-AHP-40, GV-ALP-3, GV-OX-11, GV-OX-12,** and **GV-OX-13:** These valves are ½" MIL-STD-24109 globe valves.
b. **NV-OX-3, NV-OX-4, NV-OX-5, NV-OX-6, NV-OX-7**: These valves are ½" MIL-STD-24109 needle valves.
c. **CV-OX-1:** This valve is a Mil-STD-24109 check valve.
d. **PR-AHP-11**: This regulator is a Tescom Model 26-1611-19-253.
e. **GCV-OX-7, GCV-OX-8, GCV-OX-9, GCV-OX-10, GCV-OX-11, GCV-OX-12, GCV-AHP-34,** and **GCV-ALP-6**: These gauge calibration valves are CPV model 980.

f. **RV-ALP-3:** This relief valve is a Fluid Mechanics model 40331-3310. This valve shall be reset to 110 psi. The contractor shall also provide an exhaust averter that deflects exhaust from this relief valve away from the operators in accordance with Section 3.1.
g. **RV-OX-1:** This relief valve is a Fluid Mechanics model 40331-3310. This valve shall be rest to 3300 psi.
h. O2 Transfer Pump. This pump is a Haskell Model AGD-5/AGD-30/81250. The first pump model number is 526619. The second pump model number is 52623. The overhaul shall also include calibration of all gauges internal to the pump assembly. The overhaul shall also include reset of all relief valves internal to the pump assembly.

3.2.15.2 The following components associated with the O2 Transfer Panel shall be replaced "in kind" as described in paragraph 1.1.10:

a. The contractor shall replace flex hose assemblies **FH-OX-1 through FH-OX-25**. **FH-OX-1** through **FH-OX-10** shall be provided with new CGA-540 charging fittings. **FH-OX-11** through **FH-OX-20** shall be provided with new Sherwood fittings (P/N# SW-SA4302). **FH-OX-21** through **FH-OX-25** shall be provided with new, Pin Indexed Yoke w/ T-Handle for CGA-870 Oxygen. The hoses shall be provided with new dust caps. The existing flex hoses are 3000 psi working pressure Process Controls ¼" diameter x 24" in length.
b. The contractor shall replace flex hoses **FH-ALP-3**, **FH-OX-26** and **FH-OX-27**. The flex hoses shall be "in kind" to the existing hoses.
c. The contractor shall replace Quick Disconnects **QD-OX-1 through QD-AHP-25**. The existing quick disconnects are Tomco ¼" model QC4-B-4F-K3-316-201. The adapters from the quick disconnects to the manifolds shall also be replaced "in kind" to the existing adapters.
d. **QD-OX-26**. The contractor shall replace this quick disconnect "in Kind" as described in paragraph 1.1.10.

3.2.15.3 O2 TRANSFER PANEL MODIFICATION: This panel shall be reconfigured as shown in Section 6 so that it can perform oxygen charging at 3000 psi and through the booster pump at 5000 psi.

a. The contractor shall install a new relief valve set to 5500 psi between **NV-OX-5** and **NV-OX-13** as shown in Section 6. The relief valve exhaust shall be tied into the existing O2 relief valve exhausts.
b. The contractor shall install a new ½" globe valve under **RV-OX-1** as show in Section 6.
c. The contractor shall replace **PG-OX-8, PG-OX-9,** and **PG-OX-12** with 8000 psi gauges.

3.2.15.4 All O-rings associated with the O2 Transfer Panel, shall be replaced "in-kind" as described in paragraph 1.1.10.

3.2.16 DDS AIR DISTRIBUTION PANEL:

3.2.16.1 PANEL MOVE AND RECONFIGURATION: The contractor shall reconfigure and move this panel to the high bay in building 989 in the existing location of SDV/SCWS Charging Panel #2, as shown in Section 6. All piping and components shall meet the requirements of Section 3.1.

a. **SDV/SWCS AIR CHARGING SELECTOR PANEL:** The DDS Air Distribution Panel move will involve the creation of a new SDV/SWCS Air Charging Selector Panel to be put in the existing place of the DDS Air Distribution Panel as shown in Section 6.

b. **The DDS AIR DISTRIBUTION PANEL**: This panel shall be reconfigured as shown in Section 6 so it can send either 3000 psi air to SDV/SCWS Charging Panels (#1, #2, and #3) or separately, or 5500 psi air through the booster pump to those same panels. In Section 6 components to be demolished are in a hatch and new components are shown in blue.

c. **NEW BOOSTER PUMP**: The contractor shall provide for a new air booster pump. The new booster pump shall be capable of pumping the existing air supply to 5500 psi to supply SDV/SWCS Charging Panels 1 and 2. The new booster pump shall de designed to work with the existing setup on the panel. The contractor is responsible for any re-hydrotesting and re-cleaning required herein.

d. **SUPPLY:** The existing supply to SDV/SWCS Charging Panels #1 and #2 shall be utilized for the supply of the DDS Air Distribution Panel's new location. The contractor is responsible for any necessary re-hydrotesting and re-cleaning to provide this supply.

3.2.16.2 The following valves associated with the DDS Air Distribution Panel shall be overhauled to "as new" condition as described in paragraph 1.1.9:

a. **GV-AHP-28, GV-AHP-30, GV-AHP-31, GV-AHP-32, GV-ALP-1:** These valves are ½" MIL-STD-24109 globe valves.
b. **NV-AHP-13**: These valves are ¼" MIL-STD-24109 needle valves.
c. **CV-AHP-6** and **CV-AHP-8:** These valves are Mil-STD-24109 check valves.
d. **PR-AHP-9:** This regulator is a Tescom regulator
e. **PR-AHP-10:** This regulator is a Tescom regulator.
f. **PR-AHP-14:** This regulator is a Tescom Model 26-1121-182.
g. **FL-AHP-4:** The contractor shall clean and overhaul the sintered stainless steel filter element to "as-new" condition.
h. **GCV-AHP-23, GCV-AHP-25, GCV-AHP-27,** and **GCV-ALP-4**: These gauge calibration valves are CPV model 980.
i. **RV-ALP-1:** This relief valve is a Fluid Mechanics relief valve. This valve shall be reset to 100 psi.

3.2.16.3 The following components associated with the DDS Air Distribution Panel shall be replaced "in kind" as described in paragraph 1.1.10:

a. The contractor shall replace flex hose assemblies **FH-AHP-23** (which a Process Controls flex hose ½" diameter by 75 feet in

length) and **FH-AHP-24** (which is Process Controls flex hose ½″ by 100 feet in length). These flex hoses shall be provided with new charging fittings. The new "in kind" charging fittings shall be provided, female on panel, male on hose. A male cap shall be provided for when the hose is not in use.

b. The contractor shall replace Quick Disconnects **QD-AHP-24**. The existing quick disconnect are Tomco ½″ model ML4-HP26. The adapters from the quick disconnects to the manifolds shall also be replaced "in kind" to the existing adapters.

3.2.16.4 GV-AHP-29, GV-AHP-33, GV-AHP-34, NV-AHP-12, CV-AHP-7, RV-AHP-6, GCV-AHP-24, GCV-AHP-26, GCV-AHP-28, PG-AHP-24, PG-AHP-26, and **PG-AHP-28:** The following valves and components shall be removed from the DDS Air Distribution Panel.

3.2.16.5 PANEL RENAMING: The contractor shall rename the DDS Air Distribution Panel as "SDV/SWCS Air Distribution Panel".

3.2.16.6 All O-rings associated with the DDS Air Distribution Panel, shall be replaced "in-kind" as described in paragraph 1.1.10.

3.2.17 DDS AIR PANEL #1:

3.2.17.1 The following valves associated with the DDS Air Panel #1 shall be overhauled to "as new" condition as described in paragraph 1.1.9:

a. **GV-AHP-22** and **GV-AHP-24:** These valves are ½″ MIL-STD-24109 globe valves.
b. **NV-AHP-8**: These valves are ½″ MIL-STD-24109 needle valves.
c. **NV-AHP-9**: These valves are ¼″ MIL-STD-24109 needle valves.
d. **CV-AHP-4:** This valve is a Mil-STD-24109 check valve.
e. **PR-AHP-7**: This regulator is a Tescom Model 26-1015-14-005.
f. **PR-AHP-12:** This regulator is a Tescom Model 26-1121-182.
g. **FL-AHP-2:** The contractor shall clean and overhaul the sintered stainless steel filter element to "as-new" condition.
h. **GCV-AHP-15, GCV-AHP-17, and GCV-AHP-18**: These gauge calibration valves are CPV model 980.
i. **RV-AHP-4:** This relief valve is a Fluid Mechanics model 40331-3350. This valve shall be reset to 1100 psi.

3.2.17.2 The following components associated with the DDS Air Panel #1 shall be replaced "in kind" as described in paragraph 1.1.10:

a. The contractor shall replace flex hose assembly **FH-AHP-25**. This is a Process Controls flex hose ¾″ in diameter by 50 feet in length. These flex hose shall be provided with new charging fittings.
b. The contractor shall replace Quick Disconnects **QD-AHP-22**. The existing quick disconnect are Tomco ¾″ model ML6-HP31. The adapters from the quick disconnects to the manifolds shall also be replaced "in kind" to the existing adapters

3.2.17.3 All O-rings associated with the DDS Air Panel #1, shall be replaced "in-kind" as described in paragraph 1.1.10.

3.2.18 DDS AIR PANEL #2:

3.2.18.1 The following valves associated with the DDS Air Panel #2 shall be overhauled to "as new" condition as described in paragraph 1.1.9:

a. **GV-AHP-25** and **GV-AHP-27:** These valves are ½" MIL-STD-24109 globe valves.
b. **NV-AHP-10**: These valves are ½" MIL-STD-24109 needle valves.
c. **NV-AHP-11**: These valves are ¼" MIL-STD-24109 needle valves.
d. **CV-AHP-5:** This valve is a ½" Mil-STD-24109 check valve.
e. **PR-AHP-8**: This regulator is a Tescom Model 26-1015-14-005.
f. **PR-AHP-13:** This regulator is a Tescom Model 26-1121-182.
g. **FL-AHP-3:** The contractor shall clean and overhaul the sintered stainless steel filter element to "as-new" condition.
h. **GCV-AHP-19, GCV-AHP-21,** and **GCV-AHP-22**: These gauge calibration valves are CPV model 980.
i. **RV-AHP-5:** This relief valve is a Fluid Mechanics model 40331-3350. This valve shall be reset to 1100 psi.

3.2.18.2 The following components associated with the DDS Air Panel #2 shall be replaced "in kind" as described in paragraph 1.1.10:

a. The contractor shall replace flex hose assembly **FH-AHP-26**. This is a Process Controls flex hose ¾" in diameter by 75 feet in length. These flex hose shall be provided with new charging fittings.
b. The contractor shall replace Quick Disconnects **QD-AHP-23**. The existing quick disconnect are Tomco ¾" model ML6-HP31. The adapters from the quick disconnects to the manifolds shall also be replaced "in kind" to the existing adapters.

3.2.18.3 All O-rings associated with the DDS Air Panel #2, shall be replaced "in-kind" as described in paragraph 1.1.10.

3.2.19 DDS NITROGEN CHARGING PANEL:

3.2.19.1 The following valves associated with the DDS Nitrogen Charging Panel shall be overhauled to "as new" condition as described in paragraph 1.1.9:

a. **NV-N2-9**: These valves are ½" MIL-STD-24109 needle valves.
b. **NV-N2-10**: These valves are ¼" MIL-STD-24109 needle valves.
c. **GCV-N2-10** and **GCV-N2-11**: These gauge calibration valves are CPV model 980.

3.2.19.2 The following components associated with the DDS Nitrogen Charging Panel shall be replaced "in kind" as described in paragraph 1.1.10:

a. The contractor shall provide for new blank caps at the panel to provide for cleanliness of the panel when the existing flex hoses are not in use.
b. The contractor shall replace Quick Disconnects **QD-N2-3**. The existing quick disconnect are Tomco ½" model QC8-B-8F-K6-316-

201. The adapters from the quick disconnects to the manifolds shall also be replaced “in kind” to the existing adapters.

3.2.19.3 The contractor shall provide a ½″ CPV blank tailpiece for this panel and provide it with a lanyard. This is for use in maintaining cleanliness of system when not in use.

3.2.19.4 All O-rings associated with the DDS Nitrogen Charging Panel, shall be replaced “in-kind” as described in paragraph 1.1.10.

3.2.20 DDS OXYGEN CHARGING PANEL:

3.2.20.1 The following valves associated with the DDS Oxygen Charging Panel shall be overhauled to “as new” condition as described in paragraph 1.1.9:

a. **NV-OX-8**: These valves are ½″ MIL-STD-24109 needle valves.
b. **NV-OX-9**: These valves are ¼″ MIL-STD-24109 needle valves.
c. **GCV-OX-13** and **GCV-OX-14**: These gauge calibration valves are CPV model 980.

3.2.20.2 The following components associated with the DDS Oxygen Charging Panel shall be replaced “in kind” as described in paragraph 1.1.10:

a. The contractor shall replace flex hose assemblies **FH-O2-37**(which is ½″ in diameter and 75 feet in length) and **FH-O2-38** (which is ½″ inn diameter and 100 feet in length). These flex hose shall be provided with new charging fittings.
b. The contractor shall replace Quick Disconnects **QD-OX-27**. The existing quick disconnect are Tomco ¼″ model QC4-B-4F-K3-316-201. The adapters from the quick disconnects to the manifolds shall also be replaced “in kind” to the existing adapters.

3.2.20.3 All O-rings associated with the DDS Oxygen Charging Panel shall be replaced “in-kind” as described in paragraph 1.1.10.

3.2.21 SDV/SWCS AIR CHARGING PANEL #1:

3.2.21.1 The SDV/SWCS Charging Panel #1 will be supplied from the SDV/SWCS Air Distribution Panel. The contractor shall run a new supply from the SDV/SWCS Air Distribution Panel’s new location. This new supply line shall be rated to 5500 psi.

3.2.21.2 The following valves associated with the SDV/SWCS Air Charging Panel #1 shall be overhauled to “as new” condition as described in paragraph 1.1.9:

a. **GV-AHP-35** and **GV-AHP-36:** These valves are ½″ MIL-STD-24109 globe valves.
b. **NV-AHP-14**: These valves are ¼″ MIL-STD-24109 needle valves.
c. **CV-AHP-9:** This valve is a ½″ Mil-STD-24109 check valve.
d. **GCV-AHP-29** and **GCV-AHP-30**: These gauge calibration valves are CPV model 980.

3.2.21.3 The following components associated with the SDV Air Charging Panel #1 shall be replaced “in kind” as described in paragraph 1.1.10:

a. The contractor shall replace flex hose assembly **FH-AHP-27**. This is a Process Controls flex hose ½” in diameter and with a working pressure of 5500 psi. These flex hose shall be provided with new charging fittings.
b. The contractor shall replace Quick Disconnects **QD-AHP-25**. The existing quick disconnect are Tomco ½” model ML4-HP26. The adapters from the quick disconnects to the manifolds shall also be replaced “in kind” to the existing adapters.

3.2.21.4 The contractor shall re-hydrotest and re-clean the piping and components on this panel IAW Section C3.1 so that they are rated to 5500 psi.

3.2.21.5 **PANEL RENAMING:** The contractor shall rename SDV Air Charging Panel #1 as SDV/SWCS Air Charging Panel #1

3.2.21.6 All O-rings associated with the SDV/SWCS Air Charging Panel #1 shall be replaced “in-kind” as described in paragraph 1.1.10.

3.2.22 SDV/SWCS AIR CHARGING PANEL #2:

3.2.22.1 This panel shall be relocated to the next high bay over in Building 989, directly on the other side of the wall from its current location. A new line shall be run from the supplies from the SDV/SWCS Air Distribution Panel to supply this panel with both 3000 psi air and 5500 psi air.

3.2.22.2 The following valves associated with the SDV/SWCS Air Charging Panel #2 shall be overhauled to “as new” condition as described in paragraph 1.1.9:

a. **GV-AHP-37** and **GV-AHP-38:** These valves are ½” MIL-STD-24109 globe valves.
b. **NV-AHP-15**: These valves are ¼” MIL-STD-24109 needle valves.
c. **CV-AHP-10:** This valve is a ½” Mil-STD-24109 check valve.
d. **GCV-AHP-31** and **GCV-AHP-32**: These gauge calibration valves are CPV model 980.

3.2.22.3 The following components associated with the SDV/SWCS Air Charging Panel #2 shall be replaced “in kind” as described in paragraph 1.1.10:

a. The contractor shall replace flex hose assembly **FH-AHP-28**. This is a Process Controls flex hose ½” in diameter and with a working pressure of 4500 psi. These flex hose shall be provided with new charging fittings.
b. The contractor shall replace Quick Disconnects **QD-AHP-26**. The existing quick disconnect are Tomco ½” model ML4-HP26. The adapters from the quick disconnects to the manifolds shall also be replaced “in kind” to the existing adapters

3.2.22.4 The contractor shall re-hydrotest and re-clean the piping and components on this panel IAW Section 3.1 so that they are rated to 5500 psi.

3.2.22.5 PANEL RENAMING: The contractor shall rename SDV Air Charging Panel #2 as SDV/SWCS Air Charging Panel #2

3.2.22.6 All O-rings associated with the SDV/SWCS Air Charging Panel #2 shall be replaced "in-kind" as described in paragraph 1.1.10.

3.2.23 SDV/SWCS Air Charging Panel #3: The contractor shall create a new panel, SDV/SWCS Charging Panel #3, from existing components on the DDS Air Distribution Panel and one new ½" globe valve as shown in Section 6.

3.2.24 PIPING SYSTEM O-RINGS: All piping & tubing unions associated with the interconnecting piping for the systems refurbished in paragraphs 3.2.2 through 3.2.9 (including components not refurbished in this overhaul) shall be broken and inspected. All O-rings shall be replaced. The o-rings shall meet the requirements of Section 3.1.

3.2.25 NEW HEO2 CHARGING SYSTEM: The contractor shall provide for a new HeO2 Charging System located in the Oxygen (O2) Charging Room. The new system shall meet the requirements of Section 3.1 and be as configured in Section 6. The new system shall be supplied from a new 4 bottle rack and HeO2 Supply Panel. This panel shall supply a new HeO2 Transfer Panel. The HeO2 shall be sent to a charging pump then to the HeO2 Manifold Panel. The charging pump is GFE. Control air for the new charging Panel shall come from LP Maintenance Air Panel QD-ALP-1 and shall be piped over to the new HeO2 Transfer Panel. The pump shall take the supplied HeO2 from bottle pressure to 3000 or 5000 psi. The system may be manufactured using socket welded pipe. All valves and components will be labeled and identified IAW paragraphs 3.1.19 and 3.1.20

END OF SECTION

SECTION 4

4. N/A

END OF SECTION

SECTION 5

5. QUALITY ASSURANCE

5.1 GENERAL REQUIREMENTS:

5.1.1 All work performed shall be in accordance with and to the standards and specifications cited in each section. Any changes in design or deviation from accepted standards must be documented and submitted to the government prior to change or implementation.

5.1.2 **DESIGN REVIEW MEETINGS:** Design and fabrication review meetings shall be held by the contractor at the contractor's facility or the installation site, at time intervals no greater than six weeks. Two weeks advance written notice shall be furnished to the government prior to each meeting.

5.1.3 **CONTRACT ADHERENCE:** The contractor shall rigidly adhere to the requirements for qualification, certification, test, examination and inspection required by the various contract documents.

5.1.4 **SUBCONTRACTORS:** Subcontractors shall be monitored by the contractor to assure timely and adequate performance and adherence to approved specifications. Copies of all certifications/qualifications required for the subcontractor to perform their work shall be submitted by the contractor to the government.

5.1.5 **SUBMISSION NUMBER:** All submissions and submittals required by this contract shall include one (1) original and three (3) copies of the submission.

5.1.6 **DISK COPIES:** Systems manuals shall be prepared using a commercially available word processing program. All drawings shall be prepared on a commercially available computer aided design program. The Valve & Component Database shall be prepared on a commercially available spreadsheet design program. All submissions (Preliminary Design, Final Design, and As-Built) of systems manuals, drawings, and Valve & Component Database shall include CD copies of the system manuals, drawings, and Valve & Component Database formatted for MS Excel. Final disk submission of systems manuals, drawings, and Valve & Component Database shall be marked "As built". Final disk submissions of drawings shall include all the names of all contractor signatures present, and the date of signature. Complete files must be in current NMCI/NGEN computer program product format such as MS Word 2010, MS Excel 2010, Portable Document Format (PDF) Version 10, AutoCAD 2010 (minimum). All drawings shall be provided in AutoCAD format. The contractor shall provide a minimum of two (2) copies of all CD's. **In addition, the contractor shall scan the entire accepted as built submittal in portable document format (pdf) and submit two (2) CD's to NAVFAC EXWC and five (5) CD's to the end user.**

5.1.7 **NOTIFICATION OF TESTING:** The contractor shall provide the government with written notification of all on site testing.

This notification shall be received by the government a minimum of 30 working days prior to the date of the test.

5.1.8 CONTRACTOR'S RECORDS AND DOCUMENTS: The contractor shall submit copies of all records and documents required by this contract and the codes and specifications cited herein. One original and three copies shall be submitted.

5.1.9 PIECEMEAL SUBMITTAL: Piecemeal submittal of any submittals required by this specification is unacceptable, and such submittals will be returned without review.

5.1.10 QUALITY CONTROL PLAN: The contractor's Quality Control Plan shall be in accordance with International Organization for Standardization (**ISO 9000)**, and with any further quality requirements specified in the contract. A description of the organization that will fulfill the quality program requirements with a definition of the responsibility and authority of each functional element, shall be included. All of the contractor's documented policies or procedures which implement the quality program shall be identified in appropriate places with the plan. A short summary of the objective or purpose of each procedure shall be given. The plan must delineate, by flow chart or similar technique, where inspection, audit and other controls are to be applied to assure conformance with the contract quality requirements and must identify each assembly, process and inspection instructions applicable to the contract hardware and show where it is to be applied. The plan shall describe the method by which the plan will be applied to sub-contractors.

5.1.11 PRELIMINARY DESIGN PACKAGE: Documents in this package shall be of sufficient detail to demonstrate that the contractor's plan for the work described in this contract is in conformance with this contract as well as demonstrating the technical and functional feasibility of the contractor's plan. All elements of the design shall be in strict conformance with the hyperbaric facility code requirements as stated in paragraph 1.2.8. It shall clearly indicate where equipment, components and piping runs are intended to be located. Pragmatic issues of installation and maintenance shall be addressed. During development of the Preliminary Design, the contractor is responsible for visiting the site to facilitate layout of work. Drawings shall be in accordance with ASME Y14.100M. Drawings shall be 17" x 22", LEVEL 2 drawings. The government will respond to the Preliminary Design submittal within 30 days of receipt. The preliminary package shall consist of the following applicable items, as a minimum.

a. General Arrangement Drawings.
b. System piping and electrical schematics.
c. Calculations.
d. Proposed Material and Manufacturing Specifications and qualifications.
e. Preliminary Component Manufacturer's Design Data.
f. Subcontractors Identification, Qualifications, and Certifications.
g. Hyperbaric Systems Manual Outline.
h. Component and Panel ID tags.

i. Test Plans
j. Welding Qualifications and Procedures
k. Cleaning Qualifications and Procedures
l. Painting Plan
m. Non-destructive Testing Plan and Qualifications

5.1.12 DRAWING PACKAGE: The drawing package shall be configured, and contain the elements, as described below:

a. Title Page: The title page shall contain the contractors name and address, the contract name, location and number, the NAVFAC EXWC ECDET name and address, and any other pertinent information identified.

b. Drawing Tree: The drawing tree shall start with a "Top Drawing", with subsequent drawings developing from subsystems to elements to components, etc. Elements of a subsystem shall be numbered as sub drawings of the subsystem, etc. (see d. below).

1. The drawing tree will use the following convention for identifying drawings:

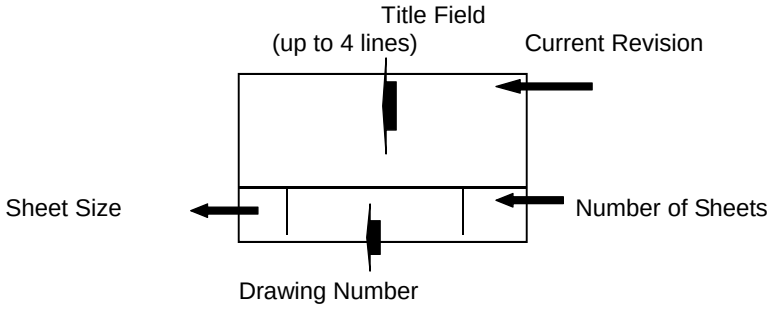

c. General Arrangement Schematic: A single, overall schematic drawing of the entire system shall be provided. This drawing shall be organized to provide easy understanding of the capabilities and configuration of the entire system. It shall show which building or room in which each component is located. Each component shall be clearly shown and the tag number shall be included next to each component. **Two (2) 37" X 28" copies of overall schematic shall be provided to the end user. These shall be suitably framed for display.** This drawing shall be organized to provide easy understanding of the capabilities and configuration of the entire system. Any certification boundaries shall be shown. The overall schematic shall show the room in which each component is located. Each component shall be clearly shown and the component tag number shall be included next to the component. The AutoCAD copy of this drawing shall have all embedded data (new and existing) attached to each valve and component as described in paragraph 5.1.17, entitled "VALVE & COMPONENT DATABASE". The existing Valve and Component List shall be available upon request. Torque values shall be embedded into the drawing where applicable for mechanically attached fittings.

d. Drawing Numbers: Each drawing (each drawing sheet) shall be given an independent and unique drawing number. Drawings shall be sequential in number. Where there are multiple layers of one drawing for fabrication details (panels, etc.), these drawings can have numbers with the unique drawing number followed by -1, -2, -3, etc. (i.e. 23456-1, 23456-2, etc.). A single drawing number for the entire drawing package is not acceptable.

e. Flow arrows and set pressures (i.e., regulators, relief valves, etc.) shall be provided on all schematic drawings.

f. The contractor shall not use any special or third party fonts.

g. The contractor shall not use descriptive text on a drawing that has an attributed drawing element already assigned to manage that information.

h. The contractor shall not use single or double quotation marks on drawing.

i. The contractor is to ensure that all entities are to be created on the model tab (model space), full size (1:1). All standard drawing blocks will be placed in model space on the “0” (zero) layer. All dimensions are to be associative and placed on the DIM layer, Font and Text Height, Dimension Extension Lines and Offsets, Arrowheads and Line-weights are preset.

j. The contractor shall identify all certification boundaries on all applicable As-Built schematics. These boundaries shall be identified by dashed lines.

5.1.13 RECORD DRAWINGS AND DOCUMENTATION: The contents shall show the work as it was actually performed. The drawings shall be 17" X 22", or as designated herein or a drawing size acceptable to the COR. It shall consist of:

a. Engineering Drawings of an “As Built” condition.

b. A serialized group of all component catalogues that are delivered with the components. They usually contain operation, maintenance, exploded view, replacement part numbers, etc.

c. Weld Maps and Joint Identifications.

d. Torque Values: The contractor shall include all required torque values as embedded data on the piping schematics.

5.1.14 COMPONENT MANUFACTURER'S DESIGN DATA: The contractor shall provide the Component Manufacturer's Design Data (CMDD) for all components provided as part of this contract. The CMDD shall be provided in one completely marked and coordinated package sufficient to assure full compliance with the specification requirements. Submittals for each manufactured product shall

include, but not be limited to the following: Manufacturer's descriptive literature and catalog cuts, manufacturer's operation and maintenance manual **(2 Copies)**, equipment drawings, diagrams, performance and characteristic curves, catalog model or number, nameplate data, size, layout dimensions, capacity, specification reference, component tag number, and find number from valve and component list/drawings.

5.1.15 SYSTEMS MANUAL: The contractor shall update the existing Systems Manuals. The contractor is responsible for providing updates for all applicable sections for systems provided under this contract. The manuals consist of the following:

a. General Facility Description:
b. System Certification:
c. There shall be a section addressing each of the Hyperbaric Systems. The following data shall be provided by the contractor for each system:

    1. System Operational Capabilities, Limitations and Set Points.
    2. System Narrative Description.
    3. System Piping and Electrical Schematics.
    4. System Operating Instructions.
    5. System Maintenance Instructions.
    6. System Design Computations.
    7. System Spare Parts Data.
    8. Component List.
    9. System Functional Test.

5.1.16 CONTRACTOR'S RECORDS AND DOCUMENTS: Contractors records and documents shall include all records and documents required by Section 1 and 3. These shall include, but are not limited to:

a. Test reports
b. Inspection reports
c. Test plans
d. Travelers/route sheets
e. Mill certs/material reports
f. Procedures
g. Qualifications
h. Records
i. Working drawings
j. Radiographs
k. Shop Drawings

5.1.17 VALVE & COMPONENT DATABASE: The Valve & Component Database provides design, procurement and manufacturer's data about the components. The database requirement shall be met by the use of MS Excel in the format shown in Section 6 Figure 1. The database fields (columns) shall include: system information, logistical information, and maintenance information.

5.1.18 FUNCTIONAL TEST PLAN: The contractor shall submit a functional test plan for the complete test of all hardware provided as part of this specification. The functional test plan shall include valve line up, functional testing procedures, pass/fail criteria and shut down of the system being tested. There shall be

initial blocks for all steps of the functional test plan. There shall be final signature blocks for both the contractor's completion and the government's witnessing of successful functional test. The plan will provide information as to all equipment needed for testing and the calibration information for that equipment. The test plan shall contain, as a minimum, the following data:

a. Test purpose/objectives.
b. Identify each assembly to be tested.
c. Describe test set up at each level of test, including diagrams and sketches to illustrate the test set-up.
d. Describe or identify all test equipment required. Calibration of test equipment.
e. Describe all test procedures, including test sequence, test parameters, participants, and pass/fail criteria.
f. Provide sample test data sheets to illustrate test data to be documented and delivered at each level of test.
g. Establish criteria for acceptance at each level of test and describe the procedures to be followed in the event of malfunction or failure.
h. Identify critical or unusual tests or test conditions.
i. Overall test schedule.

5.1.19 SYSTEM FUNCTIONAL TEST: The contractor shall be required to demonstrate by testing that all piping, instrumentation and systems are capable of meeting all the criteria contained in this specification. The functional test shall not be conducted until all other required testing has been completed, gas analysis reports have been received, and final, as built drawings have been submitted to the government. The contractor shall prepare a test plan and a test report.

5.1.20 PROJECT SCHEDULE: The contractor shall prepare a contract progress schedule that clearly defines the tasks necessary to accomplish the work. The schedule shall be a GANTT chart, CPM chart or "ROADMAP". The schedule shall be composed of defined and documented Milestones and Tasks (M&T). Milestones are defined as having no time duration; whereas, Tasks have time duration. The schedule shall show the order and interdependence of M&T and the sequence of M&T execution necessary to complete the contract. The schedule shall show the M&T that comprise the critical path. It shall show the float for those M&T not on the critical path. Procurement and subcontracting tasks may cite total individual procurement or subcontract cost. Copies of M&T documents whose work was completed during a monthly period shall be submitted with the monthly progress report for that period. The M&T documents shall be signed by the contractor to indicate certified completion of the Task. The monthly update of the contract schedule shall contain the date of effect of that update and a list of the revision dates of the schedule. The following shall be included in the schedule as either milestones or tasks, as a minimum, in addition to others necessary to describe the work:

a. Work Tasks.
b. Contractual execution date requirements milestones.
c. Government furnished information and/or equipment milestones.

d. Contractual submittal date requirements milestones.
e. Procurement activities including major equipment tasks.
f. Subcontract activities tasks.
g. Quality Control checks.

5.1.21 **MONTHLY REPORT**: The contractor shall provide a monthly report, which shall include an update of the Project Schedule and Valve & Component Database. The revised documents shall reflect any changes occurring since the last updating. It shall also include a current Progress Report containing a summary of all work performed and any problems and their solutions encountered during the reporting period. The report shall include statements of the overall status of the project. This report shall be sent electronically in its entirety to the COR.

5.1.22 **PURCHASE ORDERS:** The contractor shall submit all purchase orders for all material purchased. The contractor shall prepare a database or table which cross-references data such as purchase order number, find number (if applicable), and any other pertinent information such as heat numbers. The purchase orders shall be kept in a separate three-ring binder (or binders). Each purchase order (and its applicable data) shall be separated by its own individual tab.

5.1.23 **FACILITY FUNCTIONAL TEST:** The contractor shall be required to demonstrate by testing that all piping, instrumentation, machinery, and systems meet the following criteria:

a. Are hazard free.
b. Are in accordance with applicable Codes and Standards.

END OF SECTION

SECTION 6

6. TABLES & FIGURES

Valve & Component Database																			
Designator	Find #	Description	Model #	Manufacturer	Address	City	St.	Zip	Telephone	DWG #	Sys.	Panel/Location	PSI	Body Material	Seat Material	Conn.	Conn. Material	Kit #	Cost

FIGURE 1: VALVE & COMPONENT DATABASE FORMAT

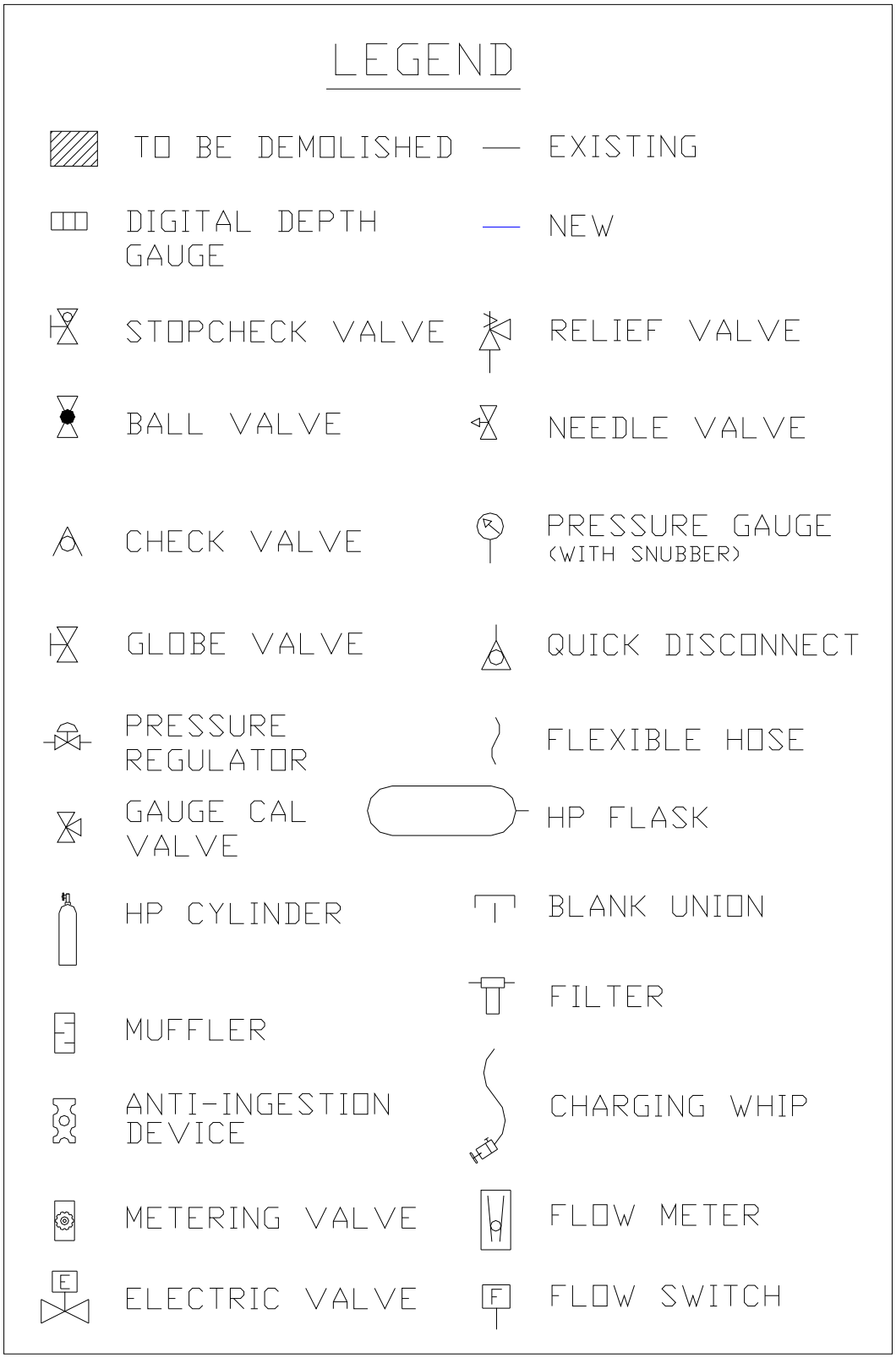

FIGURE 2: LEGEND

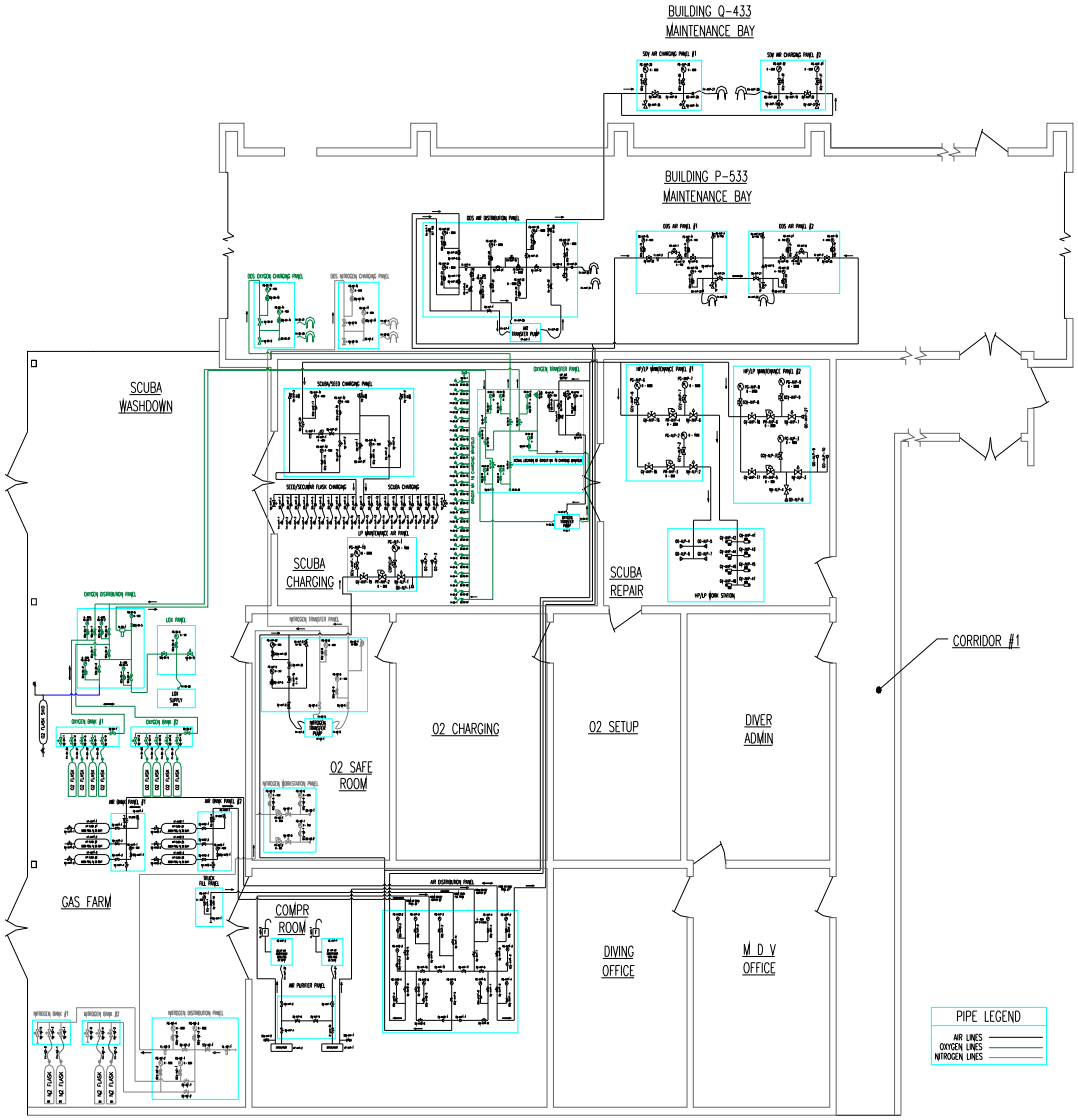

FIGURE 3: SYSTEMS SCHEMATIC

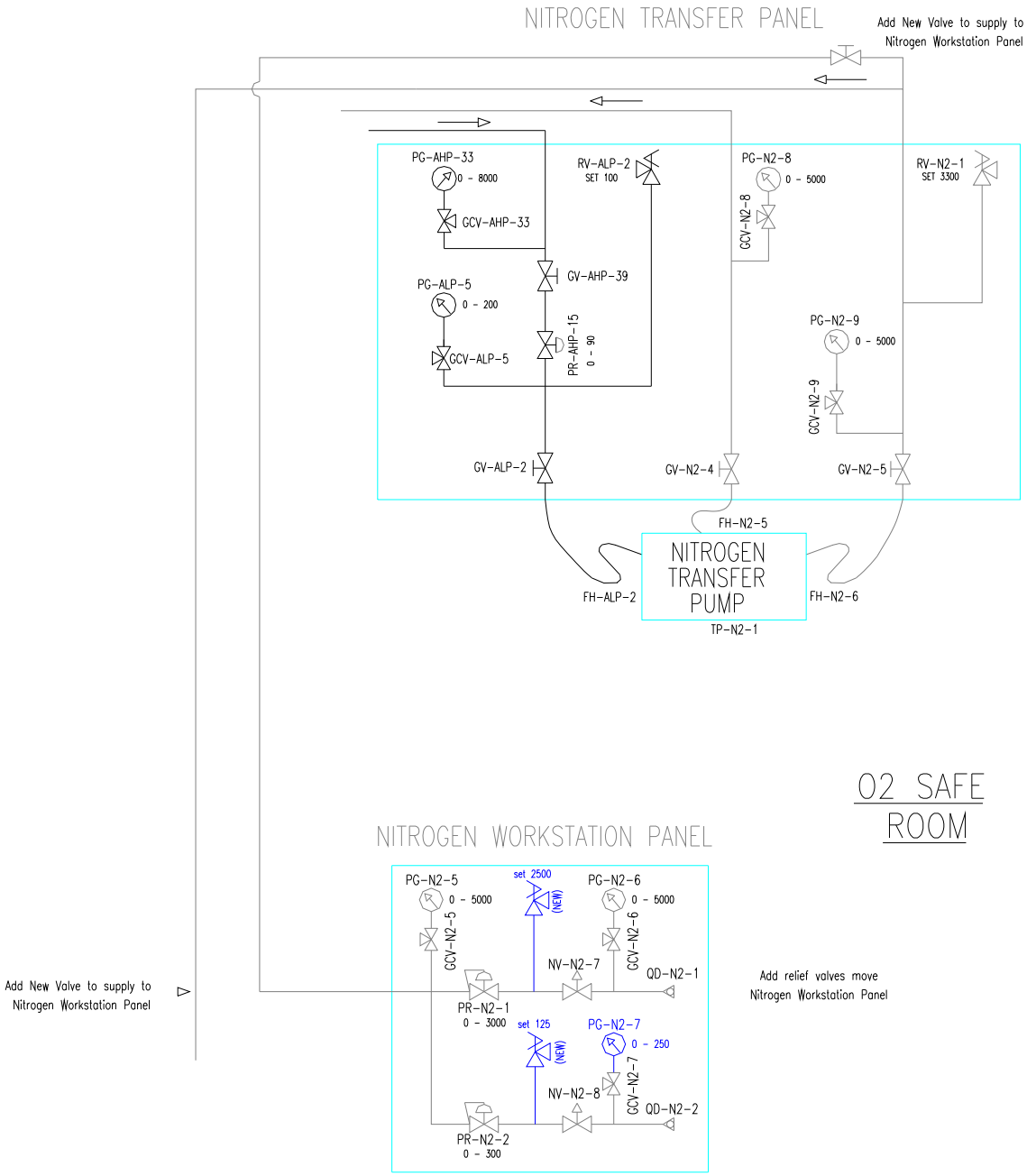

FIGURE 4: NITROGEN WORKSTATION SUPPLY RECONFIGURATION

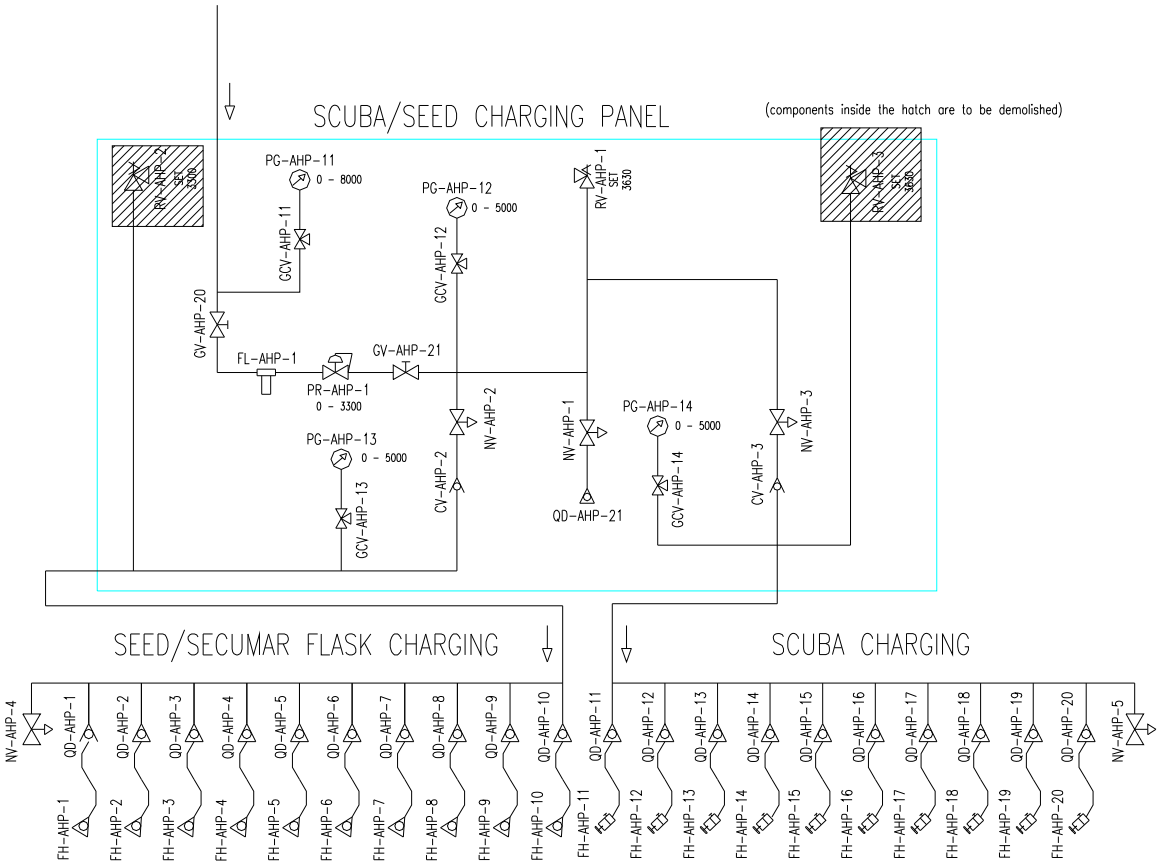

FIGURE 5: SCUBA/SEEDS CHARGING PANEL DEMOLITION

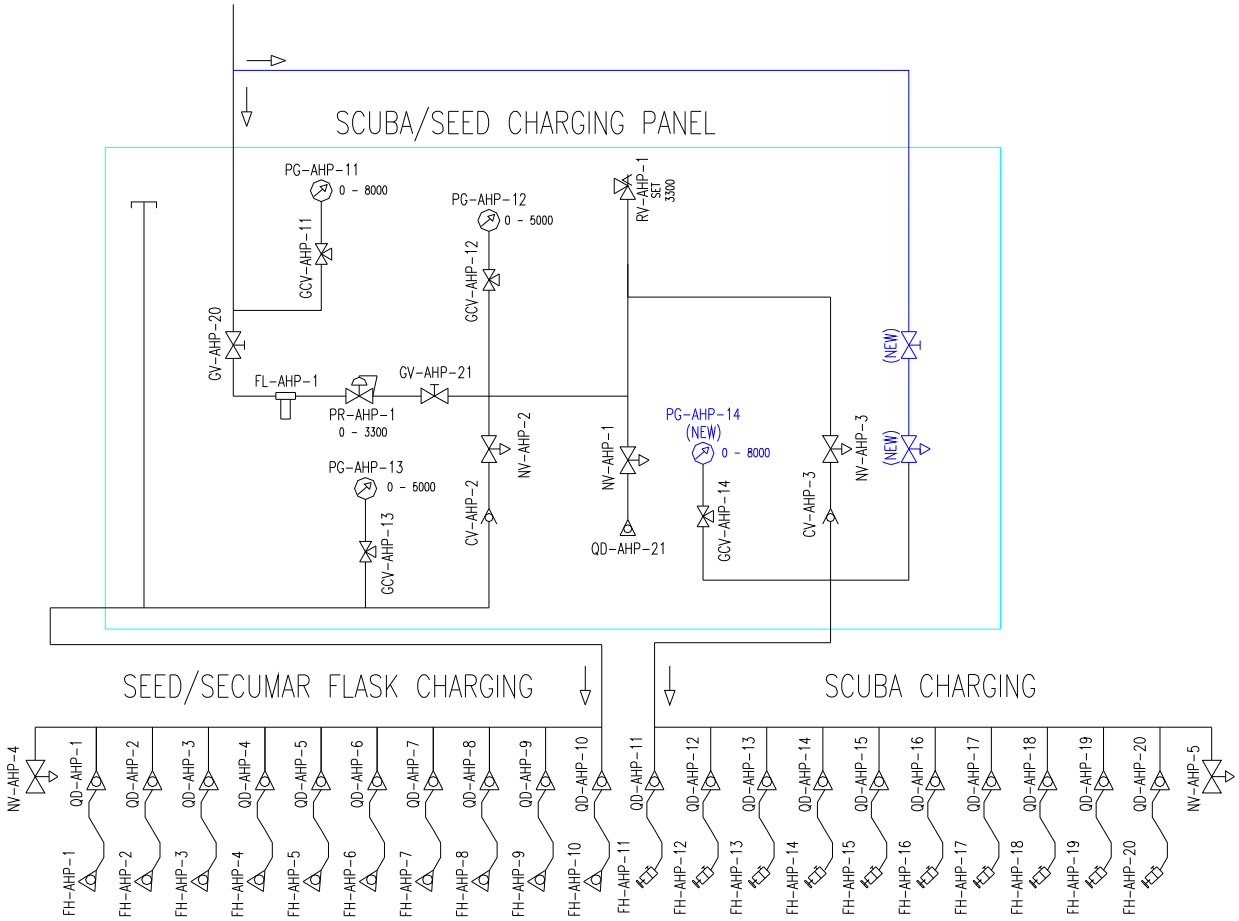

FIGURE 6: SCUBA/SEEDS CHARGING PANEL RECONFIGURATION

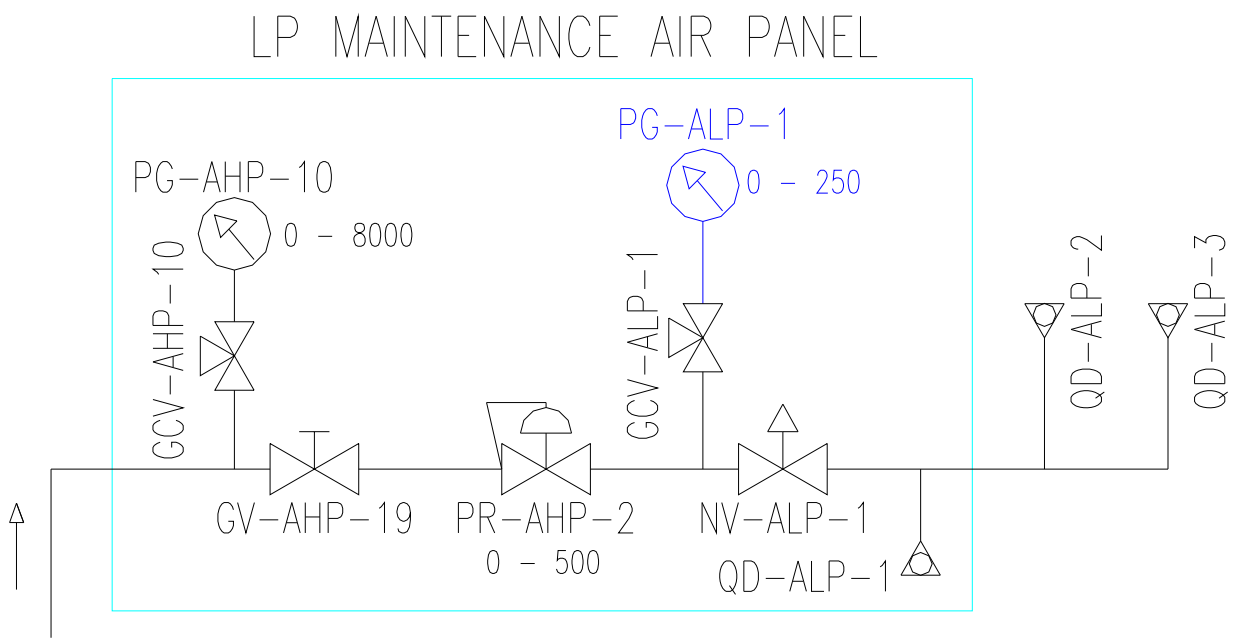

FIGURE 7: LP MAINTENANCE AIR PANEL RECONFIGURATION

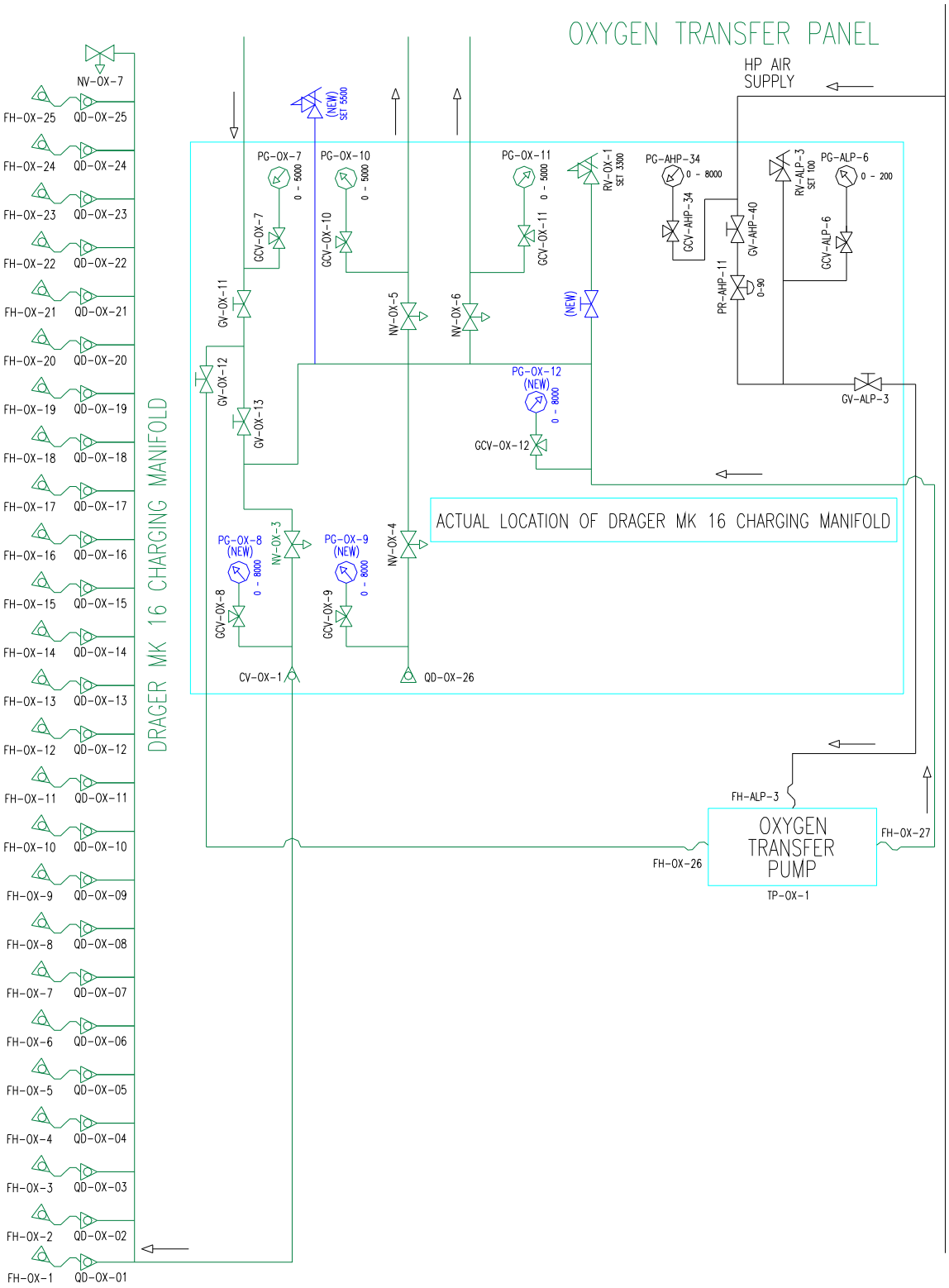

FIGURE 8: OXYGEN TRANSFER PANEL RECONFIGURATION

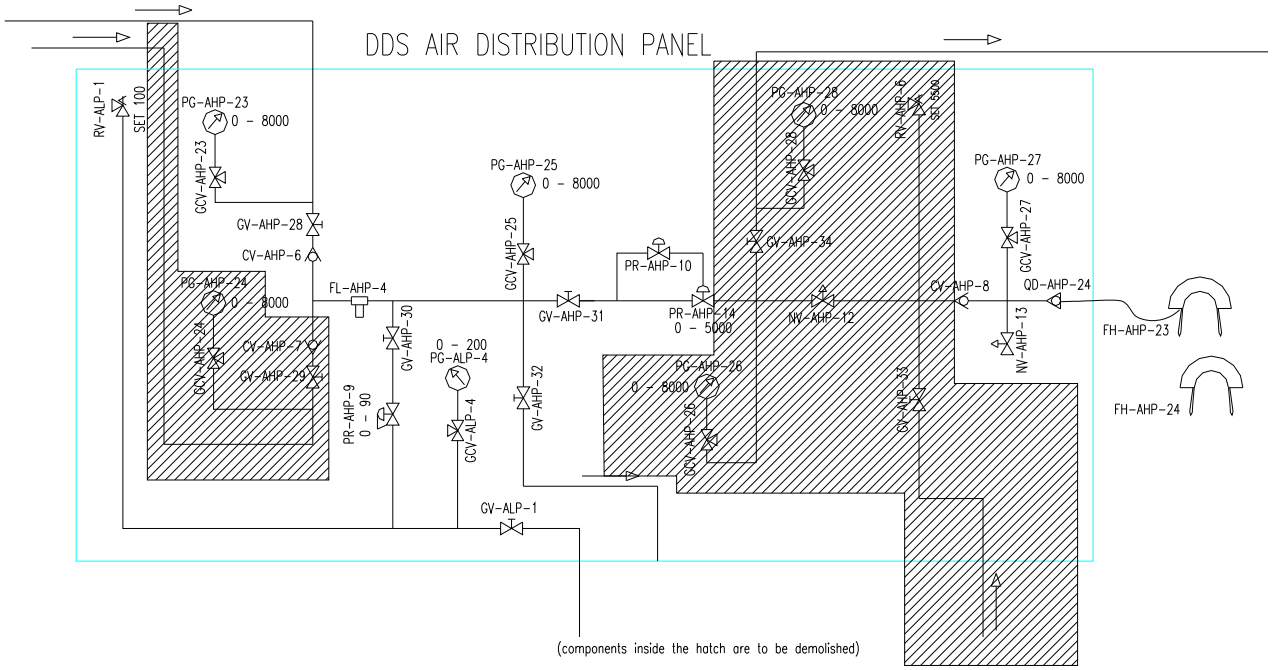

FIGURE 9: DDS AIR DISTRIBUTION PANEL DEMOLITION

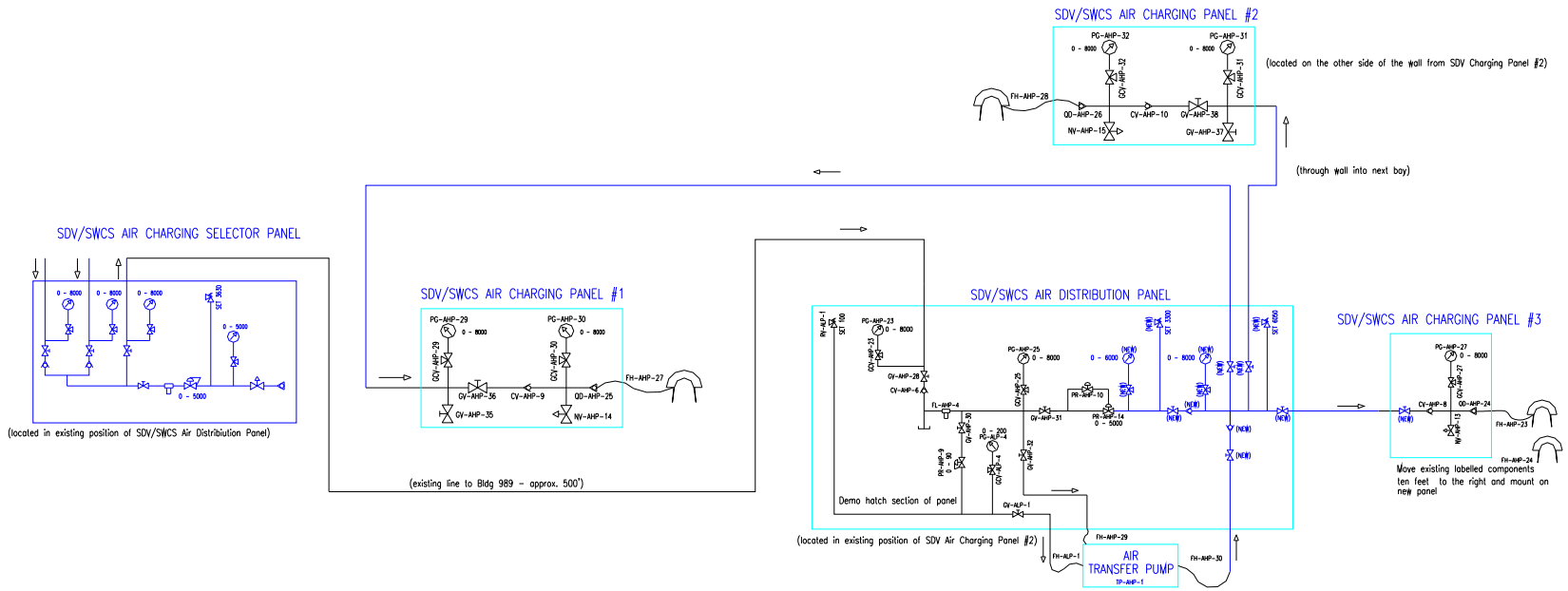

FIGURE 10: DDS AIR DISTRIBUTION PANEL RECONFIGURATION AND NEW SDV/SWCS AIR CHARGING SELECTOR PANEL

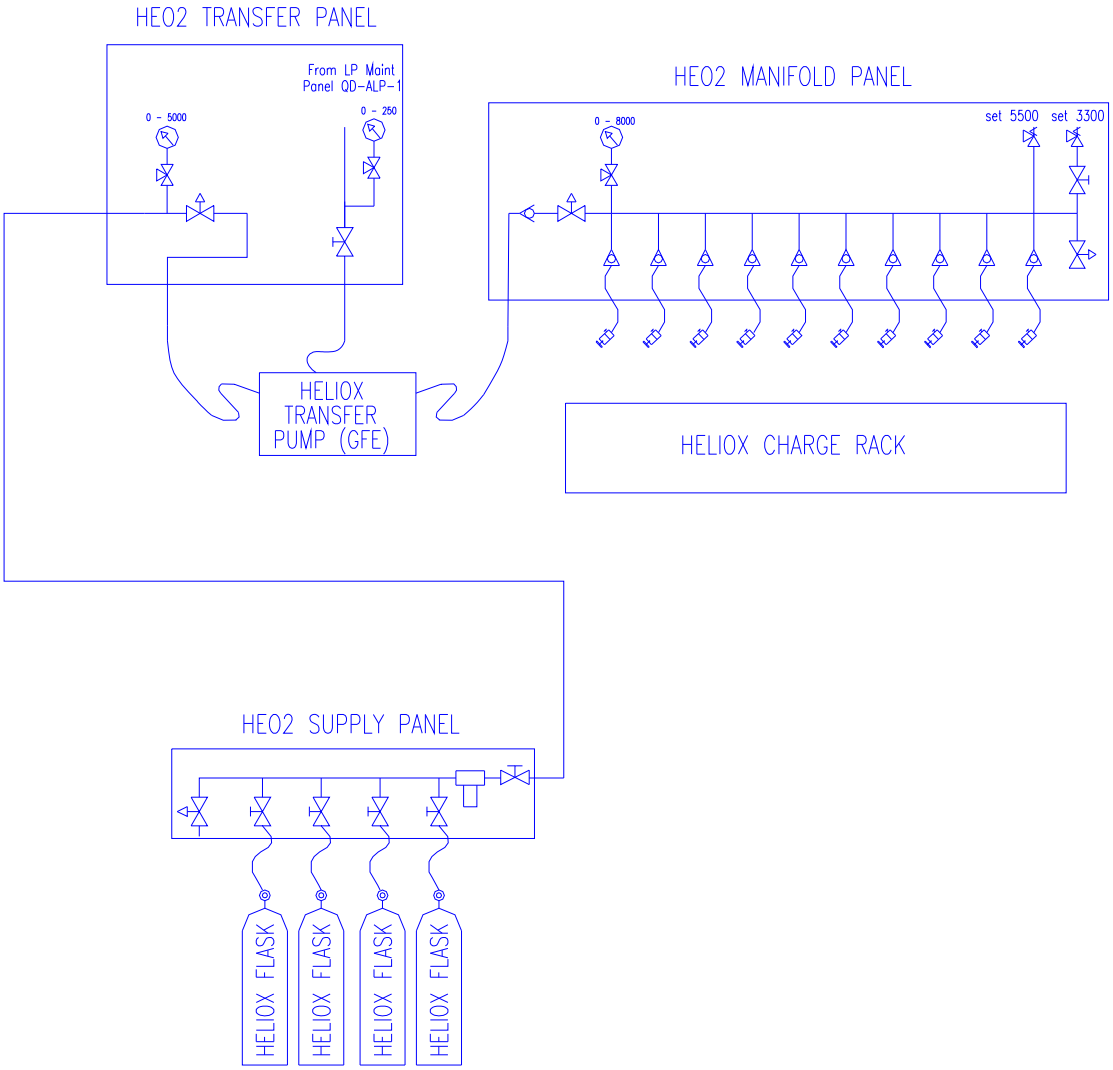

FIGURE 11: NEW HELIOX CHARGING SYSTEM LOCATED IN THE O2 CHARGE ROOM

END OF SECTION

END OF SPECIFICATION