MARK	PARTICULARS	MATERIAL	NO. REQUIRED			MASS (Kg)		REMARKS
			WORKING	SPARE	TOTAL	PER ONE	TOTAL	

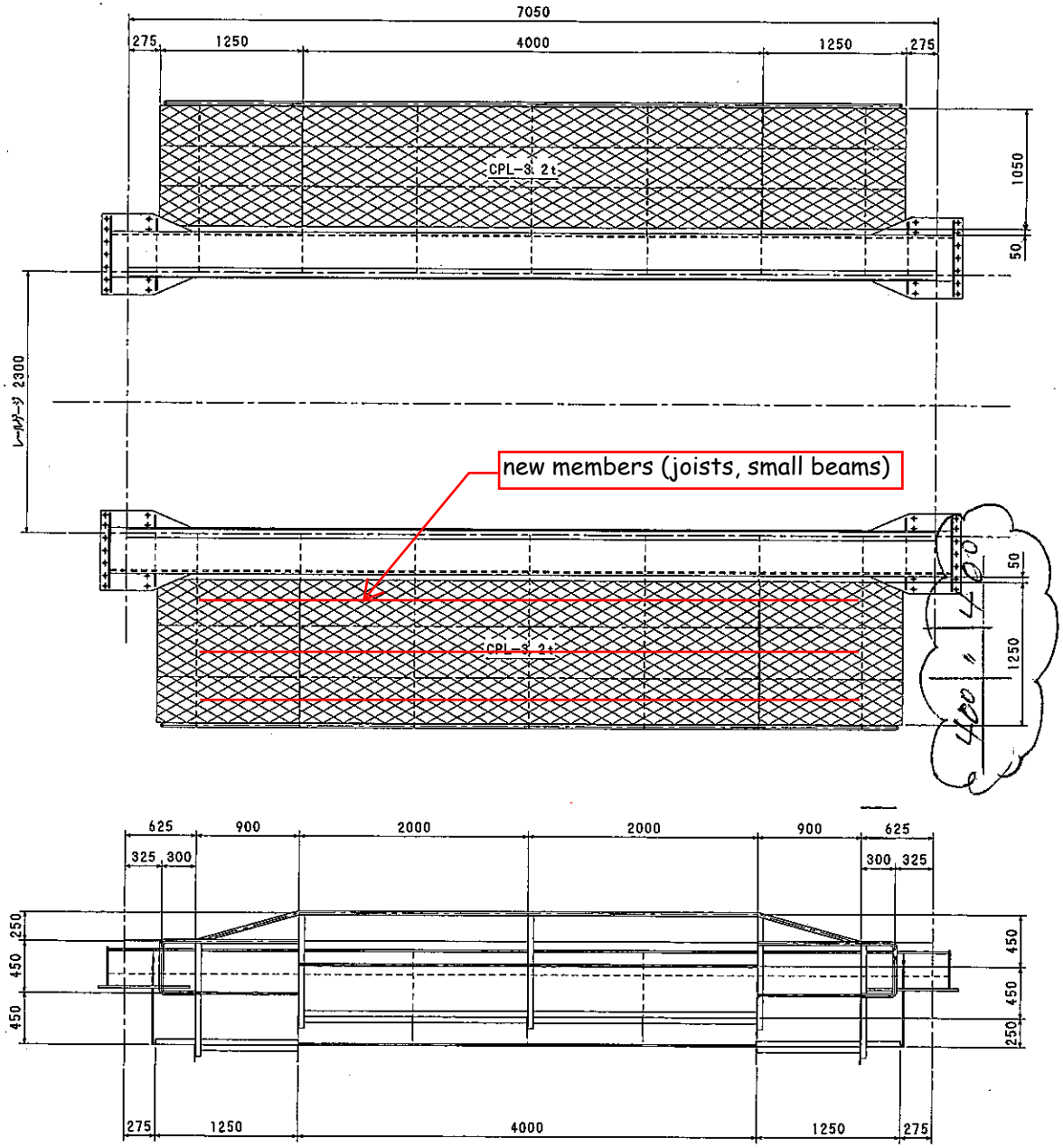

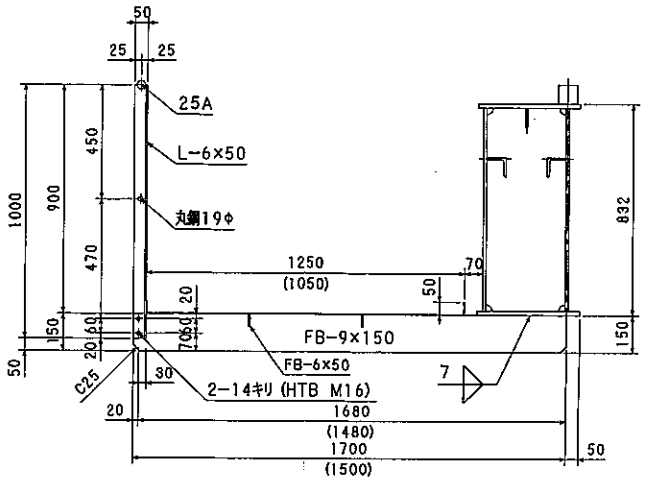

A断面 S=1/15

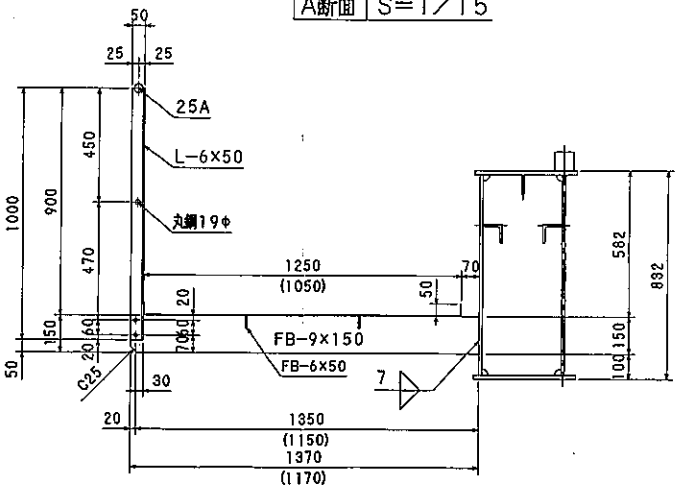

B断面 S=1/15

NO.	DATE	DESCRIPTION	Q'ty	DRAWN	DESIGNED	CHECKED	APPROVED
0	H16 4. 1	新規作成	1	ワカマツ	—	アキヤマ	アキヤマ

SCALE 1 : 30

1ST ANGLE PROJECTION / 3RD ANGLE PROJECTION

佐世保米軍（14）立神港区整備場新設機械工事

W50／25t×7.05mホイスト式天井クレーン

点検歩道図（C－4）

IHI

JOB NO. YE1F620 00-01

DRAWING NO. IG 04044-C5 REV. 0

Ishikawajima-Harima Heavy Industries Co., Ltd.

Initiated on Feb.12'10

Calculation Analysis of Walkway Ch'd Plate on OH-9-1 Sasebo

CH'd plate-3.2 in exist.
live load 0.244t/m2(50LBS/ft^2) IAW OSHA

A. Stress Analysis

$M=wl^2/8=$ Sx*Fb

where Sx= $bh^2/6$ Section Modulus
= 100*0.32*0.32/6
= 1.71cm3
Fb= 1.60t/cm2 according to JCA and JIS B-8821
l :length questinable

total load assuming 1m width-liner distributed load
w=w1+w2= 269.2kg/m= =2.69E-03 t/cm =2.69E+00 kg/cm
w1= 50LBS/ft2 OSHA live load
= 0.0244kg/cm2
= 244.1kg/m2
w2= 25.1kg/m2 CH'd plate 3.2 self-wt
M= 2.73tcm = $2.692*10^{-5}*l^2/8$ t/cm2
l^2= 8113.5cm
allowable l= 90.1cm >40cm designed by OEM
∴matched OSHA

B. Deflectrion Analysis

$\delta= 5wl^4/384EI$

where E= 2.10E+06 kg/cm2 Modulus of Direct Elast
I= $bh^3/12$ Moment of Inertia
= $100*0.32^3/12$
= 0.27cm4
w :verso
l= 40.0cm

δ= 0.16 cm
δ/l= 2 1/511 ∴matched OSHA

Countermeasure to reduce deflection by shorten' support' length
l= 20.0cm

δ= 0.0098 cm