DEPARTMENT OF THE NAVY,
NAVAL FACILITIES ENGINEERING AND
EXPEDITIONARY WARFARE CENTER

REPAIRS TO FUELING WHARF M-621

IORIZAKI TERMINAL, SASEBO, JAPAN

JAPAN MAP

AREA MAP

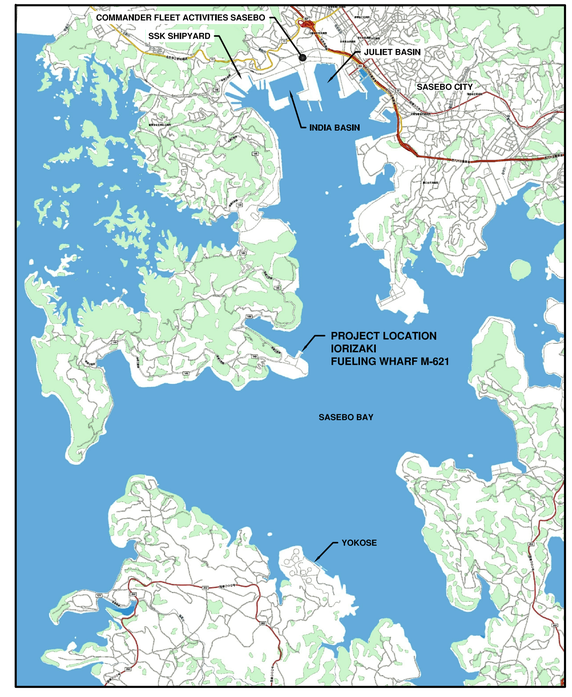

SASEBO MAP

SYM	DESCRIPTION	DATE	APPR

NAVFAC

COMMONWEALTH OF MASSACHUSETTS
CHARLES MARSHALL ROBERTS
No. 50339
REGISTERED PROFESSIONAL ENGINEER
4/23/13
SEAL

CHILDS ENGINEERING CORPORATION
34 WILLIAM WAY BELLINGHAM, MASSACHUSETTS 02019 U.S.A.
Phone: (508) 966-9092
Fax: (508) 966-9096
E-mail: mail@childseng.com
A/E INFO

APPROVED
FOR COMMANDER NAVFAC
ACTIVITY
SATISFACTORY TO DATE
DES CMR DRW TEQ CHK CDS
BRANCH MANAGER
CHIEF ENG/ARCH

DEPARTMENT OF THE NAVY
NAVAL FACILITIES ENGINEERING COMMAND
NAVAL FACILITIES ENGINEERING COMMAND
FISC, IORIZAKI TERMINAL
SASEBO, JAPAN
REPAIRS TO FUELING WHARF M-621
TITLE SHEET

SCALE: AS NOTED
EPROJECT NO.:
CONSTR. CONTR. NO.
NAVFAC DRAWING NO. 10006575
SHEET 1 OF 12
GI-001

DRAWFORM REVISION: 10 MARCH 2009

DRAWING INDEX

PAGE No.	SHEET No.	NAVFAC DWG. No.	SHEET TITLE
1	GI-001	10006575	TITLE SHEET
2	GI-002	10006576	DRAWING INDEX
3	GI-003	10006577	GENERAL NOTES
4	C-101	10006578	SITE AND DEMOLITION PLAN
5	S-101	10006579	DECK PLAN
6	S-301	10006580	SECTIONS
7	S-501	10006581	DEMOLITION DETAILS
8	S-502	10006582	REPAIR TYPE A – D DETAILS
9	S-503	10006583	REPAIR TYPE E & F DETAILS
10	S-504	10006584	REPAIR TYPE G – K DETAILS
11	S-505	10006585	CLEAT AND CURB INSTALLATION DETAILS
12	S-601	10006586	REPAIR SCHEDULE

SYMBOLS

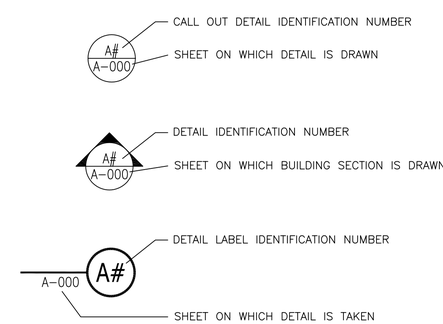

SYM	DESCRIPTION	DATE	APPR

NAVFAC

COMMONWEALTH OF MASSACHUSETTS
CHARLES MARSHALL ROBERTS
No. 50339
REGISTERED PROFESSIONAL ENGINEER
4/23/13
SEAL

CHILDS ENGINEERING CORPORATION
34 WILLIAM WAY BELLINGHAM, MASSACHUSETTS 02019 U.S.A.
Phone: (508) 966-9092
Fax: (508) 966-9096
E-mail: mail@childseng.com
A/E INFO

APPROVED
FOR COMMANDER NAVFAC
ACTIVITY
SATISFACTORY TO DATE
DES CMR DRW TEQ CHK CDS
BRANCH MANAGER
CHIEF ENG/ARCH

DEPARTMENT OF THE NAVY
NAVAL FACILITIES ENGINEERING COMMAND
NAVAL FACILITIES ENGINEERING COMMAND
FISC, IORIZAKI TERMINAL
SASEBO, JAPAN
REPAIRS TO FUELING WHARF M-621
DRAWING INDEX

SCALE: AS NOTED
EPROJECT NO.:
CONSTR. CONTR. NO.
NAVFAC DRAWING NO. 10006576
SHEET 2 OF 12
GI-002

DRAWFORM REVISION: 10 MARCH 2009

PROJECT DESCRIPTION

REPAIRS TO FUELING WHARF M-621 SHALL INCLUDE BUT ARE NOT LIMITED TO:

- REMOVING 6 BOLLARDS AND REPLACING WITH 10 TON CLEATS.
- REMOVING AND REPLACING EXISTING MOORING RINGS WITH NEW MOORING RINGS.
- REPAIRS TO THE PIER STRUCTURE INCLUDE REPAIRING SPALLS AND CRACKS IN CONCRETE DECK AND BLOCK WALL.
- CLEANING AND RECOATING OF ALL MOORING HARDWARE.

GENERAL

1. THE FUEL FACILITIES ARE CONSIDERED A HIGHLY FLAMMABLE AREA WITH RESTRICTED ACCESS. USE OF FLAME PRODUCING EQUIPMENT AND HAZARDOUS MATERIALS IS RESTRICTED. THE CONTRACTOR SHALL OBTAIN A HOT WORK PERMIT FROM THE BASE FIRE CHIEF PRIOR TO CONSTRUCTION. NO HOT WORK SHALL BE ALLOWED DURING FUELING OPERATIONS.
2. CONTRACTORS ACTIVITIES SHALL NOT BLOCK FIRE LANES ON ANY OF THE FACILITIES DURING CONSTRUCTION.
3. THE CONTRACTOR SHALL PROVIDE TEMPORARY FENCE OR BARRIER AT SURROUNDINGS OF WORK SITE TO PRECLUDE SAFETY HAZARD AS NECESSARY. CONTRACTOR SHALL PROVIDE FLASHING LIGHTS AROUND TEMPORARY FENCE OF BARRICADE DURING NIGHT.
4. THE CONTRACTOR'S WORKERS SHALL KEEP WITHIN LIMITS OF THE WORK AREA AND SHALL NOT ENTER ANY RESTRICTED AREAS UNLESS REQUIRED TO DO SO AND ARE CLEARED FOR SUCH ENTRY.
5. NO SMOKING IS ALLOWED EXCEPT IN DESIGNATED SMOKING AREAS.
6. OPENING AND CLOSING OF EXISTING GATE FOR ENTRANCE TO WHARF AND CUSTODY OF KEY FOR LOCK OF GATE SHALL BE COORDINATED WITH THE SECURITY DEPARTMENT AND RELATED DEPARTMENT VIA THE CONTRACTING OFFICER.
7. THE CONTRACTOR SHALL PROVIDE FALL PROTECTION FOR WORKERS WORKING BESIDE WHARF. ALSO WORKERS SHALL WEAR LIFE JACKETS. SCAFFOLDING SHALL BE PROVIDED AS NECESSARY. IN THIS CASE, THE SCAFFOLDING PLAN SHALL BE SUBMITTED TO THE CONTRACTING OFFICER FOR APPROVAL PRIOR TO COMMENCEMENT OF WORK.
8. PRIOR TO COMMENCING CONSTRUCTION, THE CONTRACTOR SHALL FAMILIARIZE HIMSELF WITH THE CONDITIONS AT THE SITE AND SUGGESTED CONSTRUCTION SEQUENCES SHOWN ON THE DRAWINGS. IT SHALL BE THE CONTRACTOR'S RESPONSIBILITY TO PROVIDE ALL NECESSARY SAFE GUARDS TO MAINTAIN ALL PARTS OF THE EXISTING PIER STRUCTURE IN SAFE CONDITION AT ALL TIMES DURING THE PROCESS OF CONSTRUCTION AND TO PROTECT THE STRUCTURE FROM DAMAGE.
9. THE CONTRACTOR SHALL VERIFY AT THE JOB SITE ALL DIMENSIONS AND CONDITIONS PERTAINING TO THE WORK. SHOULD ACTUAL FIELD CONDITIONS VARY FROM THOSE SHOWN, THE CONTRACTOR SHALL NOTIFY THE CONTRACTING OFFICER PRIOR TO PROCEEDING WITH THE WORK.
10. THE FACILITIES ARE EXPOSED TO SEVERE WEATHER CONDITIONS THAT WILL EFFECT THE WORK. CONTRACTOR SHALL TAKE ADEQUATE PRECAUTIONS TO PROTECT THE WORK AND SHALL BE RESPONSIBLE FOR ANY LOSS OF TIME AND EQUIPMENT OR DAMAGE TO THE WORK AS A RESULT OF THE WEATHER.
11. UTILITIES ARE SHOWN ON THE PLAN FOR REFERENCE PURPOSES ONLY. THE CONTRACTOR SHALL PROCEED WITH CAUTION DURING ALL EXCAVATION AND CONSTRUCTION ACTIVITIES. THE CONTRACTOR SHALL BE RESPONSIBLE FOR ANY DAMAGED UTILITIES. THE CONTRACTOR SHALL COORDINATE ALL EXCAVATION PERMISSIONS WITH THE CONTRACTING OFFICER AND PUBLIC WORKS DEPARTMENT.
12. IF THE CONTRACTOR ENCOUNTERS UTILITIES THAT AFFECT THE WORK THAT ARE NOT SHOWN ON THE PLANS THE CONTRACTOR SHALL NOTIFY THE CONTRACTING OFFICER PRIOR TO CONTINUING WITH THE WORK.
13. THE CONTRACTOR SHALL MAKE SURE ALL MEASURES LAID OUT IN THEIR APPROVED SPILL PREVENTION, CONTROL, AND RESPONSE (SPCR) PLAN ARE IN PLACE PRIOR TO THE START OF ANY CONSTRUCTION.
14. IF THE CONTRACTOR MUST DISTURB THE EXISTING SECURITY FENCE FOR REPAIRS, A TEMPORARY SECURITY FENCE SHALL BE ERECTED DURING THE REPAIR PROCESS AND SHALL REMAIN SECURE AT ALL TIMES. THE PERMANENT SECURITY FENCE SHALL BE REPLACED IN KIND AT THE CONCLUSION OF THE REPAIR PROCESS.
15. INFORMATION REGARDING EXISTING CONSTRUCTION AND CONDITIONS IS BASED ON FIELD INSPECTION AND IS INCLUDED TO ASSIST THE CONTRACTOR. THE CONTRACTING OFFICER ASSUMES NO RESPONSIBILITY FOR ITS ACCURACY OR COMPLETENESS.
16. THE CONTRACTOR SHALL NOTIFY THE CONTRACTING OFFICER WHEN UNANTICIPATED OR APPARENTLY DANGEROUS CONDITIONS ARE UNCOVERED DURING CONSTRUCTION OR DEMOLITION.
17. DETAILS NOT SPECIFICALLY SHOWN SHALL BE SIMILAR TO THOSE FOR MOST NEARLY SIMILAR CONDITION AS DETERMINED BY THE CONTRACTING OFFICER.
18. THE CONTRACTOR SHALL SHORE, BRACE, SHEETPILE OR OTHERWISE SUPPORT THE STRUCTURE AND EXCAVATIONS AS REQUIRED TO MAINTAIN STRUCTURAL INTEGRITY AT ALL TIMES.

DEMOLITION

1. CONTRACTOR SHALL REMOVE AND DISPOSE OF ALL WASTE MATERIALS AND DEMOLISHED MATERIALS NOT BEING REUSED OFF SITE AT AN APPROVED FACILITY.
2. CONTRACTOR SHALL NOT ALLOW ANY WASTE MATERIALS TO ENTER THE WATER. CONTRACTOR SHALL TAKE MEASURES TO COLLECT ALL DEMOLISHED WASTE.
3. CONTRACTOR SHALL INSTALL A DEBRIS BOOM AROUND ALL WORK AREAS OVER THE WATER. ALL DEBRIS COLLECTED IN THE BOOM SHALL BE REMOVED DAILY.
4. CONTRACTOR SHALL NOT UTILIZE GOVERNMENT FUEL BOOM FOR DEBRIS CONTAINMENT.
5. CONTRACTOR SHALL COLLECT AND REMOVE ALL DEMOLITION DEBRIS AND WASTE MATERIALS THAT ENTER THE WATER AND LAY ON THE BOTTOM.

CONCRETE

1. CONCRETE WORK SHALL CONFORM TO LATEST EDITIONS OF JAPAN SOCIETY OF CIVIL ENGINEERING (JSCE) STANDARD SPECIFICATION FOR CONCRETE.
2. CONCRETE SHALL BE PROPORTIONED, MIXED, AND PLACED UNDER THE SUPERVISION OF THE APPROVED TESTING AGENCY.
3. MASS CONCRETE FOR BOLLARD FOUNDATIONS SHALL BE DESIGNED AND PROPORTIONED TO CURE AT A LOW HEAT OF HYDRATION TO PREVENT THERMAL STRESS AND CRACKING.
4. CONCRETE SHALL HAVE A MINIMUM 42-DAY COMPRESSIVE STRENGTH OF 30 MPA.
5. ALL CONCRETE SHALL BE AIR-ENTRAINED.
6. CONCRETE SHALL BE CURED FOR A MINIMUM OF SEVEN DAYS.
7. LOADS SHALL BE APPLIED TO THE BOLLARDS NO SOONER THAN 28 DAYS AFTER FINAL PLACING OF CONCRETE.
8. PROVIDE A BROOM FINISH FOR EXTERIOR FLAT SURFACES.
9. PORTLAND CEMENT TYPE II SHALL BE USED FOR ALL CONCRETE AND MAXIMUM W/C (WATER CEMENT RATIO) SHALL BE 0.40.
10. AT ALL CONSTRUCTION JOINTS EPOXY NEW CONCRETE TO HARDENED CONCRETE WITH BONDING AGENT. APPLY PER MANUFACTURER'S RECOMMENDATIONS.
11. ELASTOMERIC SEALANT SHALL BE A ONE PART POLYURETHANE SEALANT/ADHESIVE. APPLY PER MANUFACTURER'S RECOMMENDATIONS.
12. ALL EXPOSED CONCRETE EDGES SHALL HAVE A 75MM CHAMFER (TYPE.)
13. ALL CONCRETE SHALL BE PLACED IN THE DRY.

REINFORCING STEEL

1. REINFORCING STEEL SHALL BE GRADE 60 NEW BILLET STEEL, CONFORMING TO ASTM A615. WELDED WIRE FABRIC SHALL BE ASTM A185.
2. DETAILING, FABRICATION, AND ERECTION OF REINFORCEMENT SHALL CONFORM TO LATEST EDITIONS OF JAPAN SOCIETY OF CIVIL ENGINEERING (JSCE) STANDARD SPECIFICATION FOR CONCRETE.
3. MINIMUM LAP OF REINFORCING BARS SHALL BE 40 DIAMETERS, UNLESS SHOWN OTHERWISE.
4. MINIMUM LAP OF WELDED WIRE FABRIC SHALL BE 150 MM OR ONE WIRE SPACE, WHICHEVER IS LARGER.
5. MINIMUM COVER OF CONCRETE SHALL BE 75 MM.
6. INSTALLATION OF REINFORCEMENT SHALL BE COMPLETED AT LEAST 24 HOURS PRIOR TO SCHEDULED CONCRETE PLACEMENT, UNLESS OTHERWISE APPROVED BY CONTRACTING OFFICER.
7. PROVIDE AND SCHEDULE ON SHOP DRAWINGS THE NECESSARY ACCESSORIES TO HOLD REINFORCEMENT SECURELY IN POSITION.
8. WHERE REINFORCEMENT IS REQUIRED IN SECTION, REINFORCEMENT IS CONSIDERED TYPICAL WHEREVER THE SECTION APPLIES.

STEEL

1. ALL STEEL COMPONENTS AND FITTINGS EXPOSED TO WEATHER IN THEIR FINAL STATE SHALL BE HOT DIPPED GALVANIZED.
2. ANCHOR BOLTS AND BEARING PLATES SHALL BE LOCATED BY TEMPLATES OR SIMILAR METHOD. PLATES SHALL BE SET IN FULL BEDS OF NON-SHRINK GROUT, BOTTOM OF BASE PLATES SHALL BE SET APPROXIMATELY 3/4" ABOVE TOP OF BEARING. RESULTING SPACE SHALL BE FILLED WITH FLOWABLE NON-SHRINK GROUT.
3. WELDING SHALL BE INSPECTED IN THE FIELD BY QUALIFIED WELDING INSPECTORS UNDER THE SUPERVISION OF AN APPROVED TESTING AGENCY.
4. ALL EXPOSED STRUCTURAL STEEL SHALL BE HOT DIPPED GALVANIZED (.622 KG/M2) AFTER FABRICATION IN COMPLIANCE WITH ASTM-123, A156, OR A386, AS APPLICABLE. GALVANIZER SHALL FURNISH TO CONTRACTING OFFICER A NOTARIZED CERTIFICATE OF COMPLIANCE WITH THESE SPECIFICATIONS.

MOORING HARDWARE

1. PROVIDE AND INSTALL CAST STEEL CLEATS AND MOORING RINGS AS SHOWN ON THE PLANS.
2. BOLLARDS SHALL BE SECURED TO THE WHARF AS SHOWN. BOLTS AND HARDWARE SHALL BE AS RECOMMENDED BY THE MANUFACTURER TO RESIST THE DESIGN LOADS.
3. CLEATS AND MOORING RINGS SHALL BE COATED WITH A 3 PART COATING SYSTEM AS DESCRIBED IN SPECIFICATION SECTION 05 30 00.
4. CLEAT SHALL BE SET IN NON-SHRINK GROUT SUCH THAT THERE IS 100% BEARING ON THE FOUNDATION AND NO VOIDS UNDER THE CLEAT BASE.

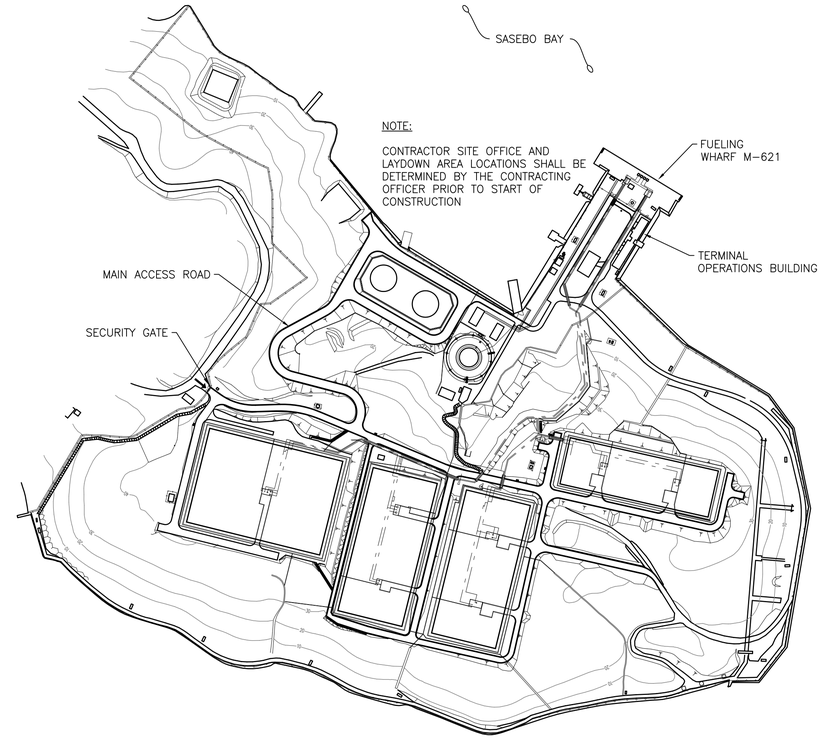

PLAN NORTH

IORIZAKI SITE PLAN

NOT TO SCALE

DATUMS:

M.H.W.	– MEAN HIGH WATER
T.P.	– TOKYO PEIL
M.L.W.	– MEAN LOW WATER
C.D.L.	– CONSTRUCTION DATUM LINE

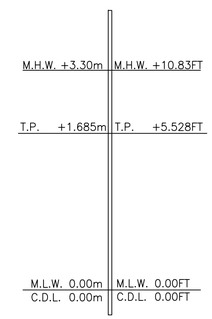

TIDAL DATUM (N.T.S.)

ABBREVIATIONS

SE	SOUTHEAST
NW	NORTHWEST
TYP	TYPICAL
HHW	HIGHER HIGH WATER
MHW	MEAN HIGH WATER
MLW	MEAN LOW WATER
LLW	LOWER LOW WATER
EL.	ELEVATION
ø	DIAMETER
(UT)	INDICATES ASSET TYPE

SYM	DESCRIPTION	DATE	APPR

NAVFAC

COMMONWEALTH OF MASSACHUSETTS CHARLES MARSHALL ROBERTS No. 50339 REGISTERED PROFESSIONAL ENGINEER
4/23/13 SEAL

CHILDS ENGINEERING CORPORATION
34 WILLIAM WAY BELLINGHAM, MASSACHUSETTS 02019 U.S.A.
Phone: (508) 966-9092
Fax: (508) 966-9096
E-mail: mail@childseng.com
A/E INFO

APPROVED
FOR COMMANDER NAVFAC
ACTIVITY
SATISFACTORY TO DATE
DES CMR DRW TEQ CHK CDS
BRANCH MANAGER
CHIEF ENG/ARCH

DEPARTMENT OF THE NAVY
NAVAL FACILITIES ENGINEERING COMMAND
NAVAL FACILITIES ENGINEERING COMMAND
FISC, IORIZAKI TERMINAL
SASEBO, JAPAN
REPAIRS TO FUELING WHARF M-621
GENERAL NOTES

SCALE: AS NOTED
EPROJECT NO.:
CONSTR. CONTR. NO.
NAVFAC DRAWING NO. 10006577
SHEET 3 OF 12
GI-003

DRAWFORM REVISION: 10 MARCH 2009

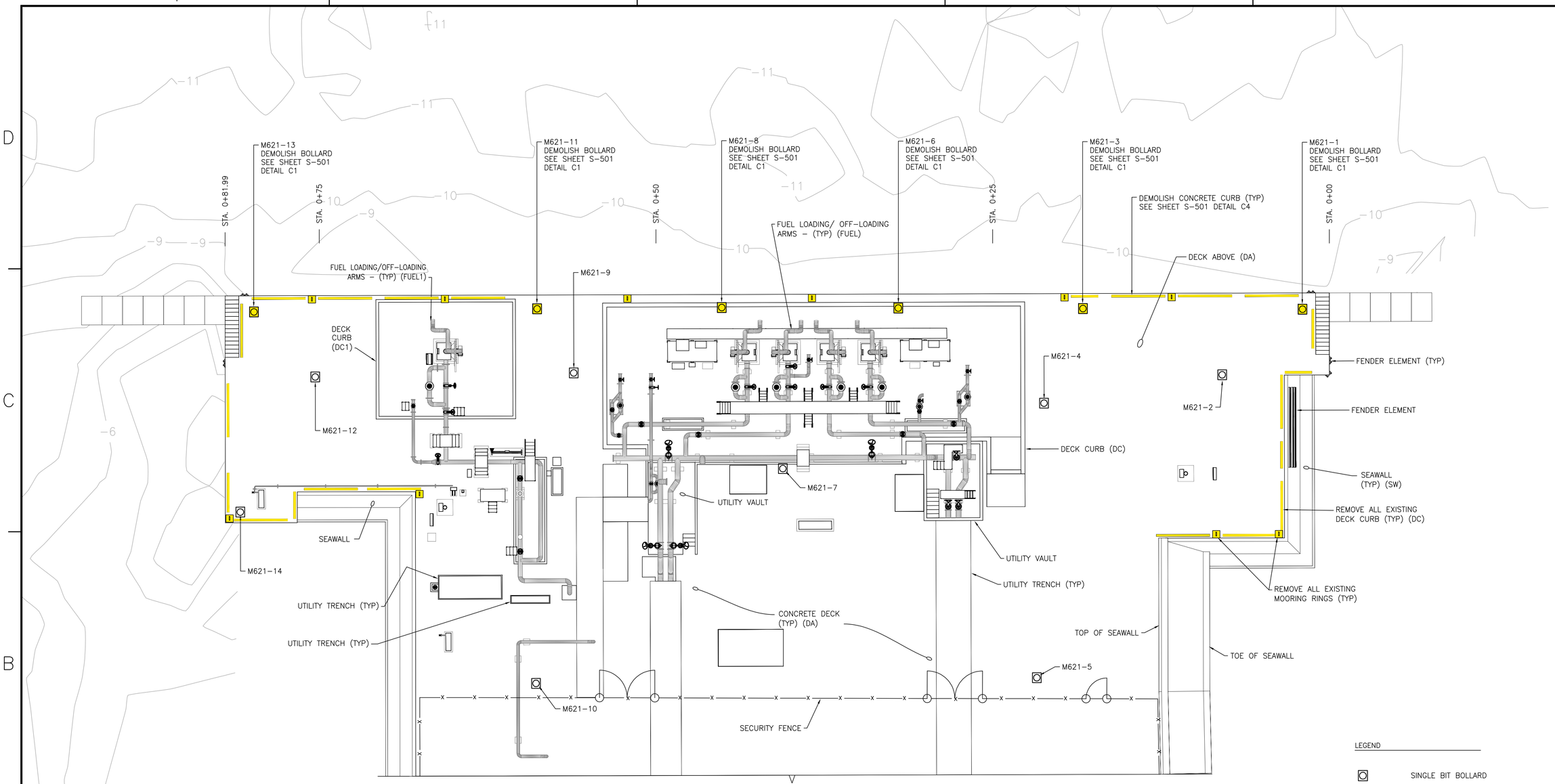

LEGEND

◎	SINGLE BIT BOLLARD
▯	MOORING RING
-9.5 x	SOUNDINGS IN METERS BELOW MLW
(UT)	INDICATES ASSET TYPE
STA. 1+00	STATION NUMBER
—— x ——	FENCE LINE
	APPROXIMATE AREA OF DEMOLITION
	CURB

DEMOLITION SCHEDULE:

1. REMOVE BOLLARDS, SEE SHEET S-501, DETAIL C1
   M621-1, M621-3,
   M621-6, M621-8,
   M621-11, M621-13,
2. REMOVE ALL 77M OF CONCRETE CURB AS SHOWN. SEE SHEET S-501, DETAIL C4
3. REMOVE AND REPLACE ALL 10 MOORING RINGS AS SHOWN. SEE SHEET S-504, DETAIL B2

FUELING WHARF M-621 DEMOLITION PLAN

SCALE: 1:150

PLAN NORTH

0 4.0 8.0 16.0 m

GRAPHIC SCALE: 1:150

SYM	DESCRIPTION	DATE	APPR

NAVFAC

COMMONWEALTH OF MASSACHUSETTS
CHARLES MARSHALL ROBERTS
No. 50339
REGISTERED PROFESSIONAL ENGINEER
4/23/13
SEAL

CHILDS ENGINEERING CORPORATION
34 WILLIAM WAY BELLINGHAM, MASSACHUSETTS 02019 U.S.A.
Phone: (508) 966-9092
Fax: (508) 966-9096
E-mail: mail@childseng.com
A/E INFO

APPROVED
FOR COMMANDER NAVFAC
ACTIVITY
SATISFACTORY TO DATE
DES CMR DRW TEQ CHK CDS
BRANCH MANAGER
CHIEF ENG/ARCH

DEPARTMENT OF THE NAVY
NAVAL FACILITIES ENGINEERING COMMAND
NAVAL FACILITIES ENGINEERING COMMAND
FISC, IORIZAKI TERMINAL
SASEBO, JAPAN
REPAIRS TO FUELING WHARF M-621
SITE AND DEMOLITION PLAN

SCALE: AS NOTED
EPROJECT NO.:
CONSTR. CONTR. NO.
NAVFAC DRAWING NO.
10006578
SHEET 4 OF 12
C-101

DRAWFORM REVISION: 10 MARCH 2009

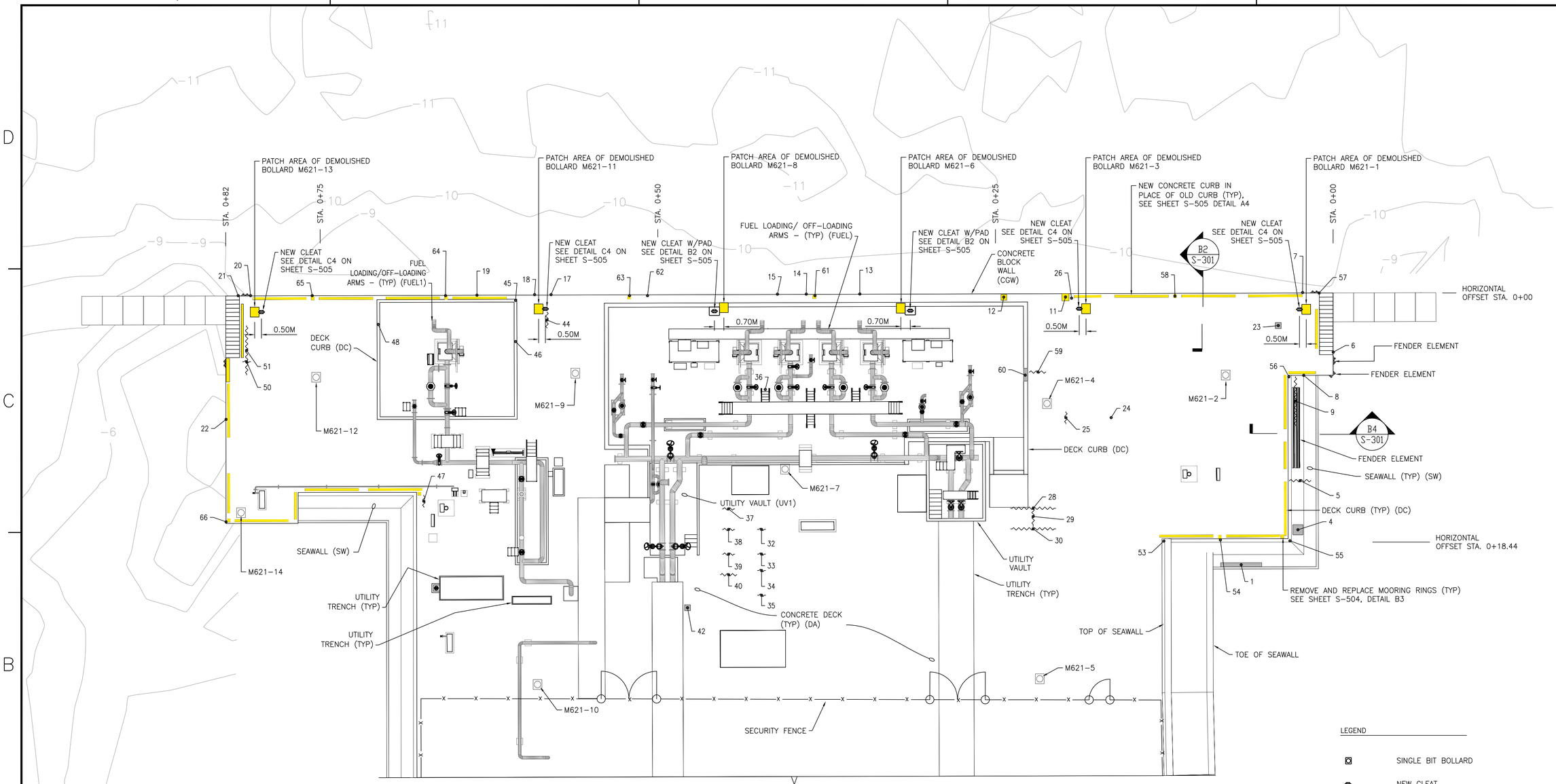

NOTES:

1. SEE S-601 FOR REPAIR TYPE AND QUANTITY FOR EACH NUMBERED DEFECT. REPAIR TYPE DETAILS ARE SHOWN ON SHEETS S-502 TO S-505.

FUELING WHARF M-621 DECK PLAN

SCALE: 1:150

PLAN NORTH

0 4.0 8.0 16.0 m

GRAPHIC SCALE: 1:150

LEGEND

⊡	SINGLE BIT BOLLARD
⊷	NEW CLEAT
-9.5 x	SOUNDINGS IN METERS BELOW MLW
50	DEFECT NUMBER SEE REPAIR SCHEDULE ON SHEET S-601 FOR REPAIR TYPE AND QUANTITY
⁓⁓	CRACK LOCATION
(UT)	INDICATES ASSET TYPE
—x—	FENCE LINE
▭	APPROXIMATE AREA OF REPAIR

SYM	DESCRIPTION	DATE	APPR

NAVFAC

COMMONWEALTH OF MASSACHUSETTS CHARLES MARSHALL ROBERTS No. 50339 REGISTERED PROFESSIONAL ENGINEER
4/23/13 SEAL

CHILDS ENGINEERING CORPORATION
34 WILLIAM WAY BELLINGHAM, MASSACHUSETTS 02019 U.S.A.
Phone: (508) 966-9092
Fax: (508) 966-9096
E-mail: mail@childseng.com
A/E INFO

APPROVED
FOR COMMANDER NAVFAC
ACTIVITY
SATISFACTORY TO DATE
DES CMR DRW TEQ CHK CDS
BRANCH MANAGER
CHIEF ENG/ARCH

DEPARTMENT OF THE NAVY
NAVAL FACILITIES ENGINEERING COMMAND
NAVAL FACILITIES ENGINEERING COMMAND
FISC, IORIZAKI TERMINAL
SASEBO, JAPAN
REPAIRS TO FUELING WHARF M-621
DECK PLAN

SCALE: AS NOTED
EPROJECT NO.:
CONSTR. CONTR. NO.
NAVFAC DRAWING NO. 10006579
SHEET 5 OF 12
S-101

DRAWFORM REVISION: 10 MARCH 2009

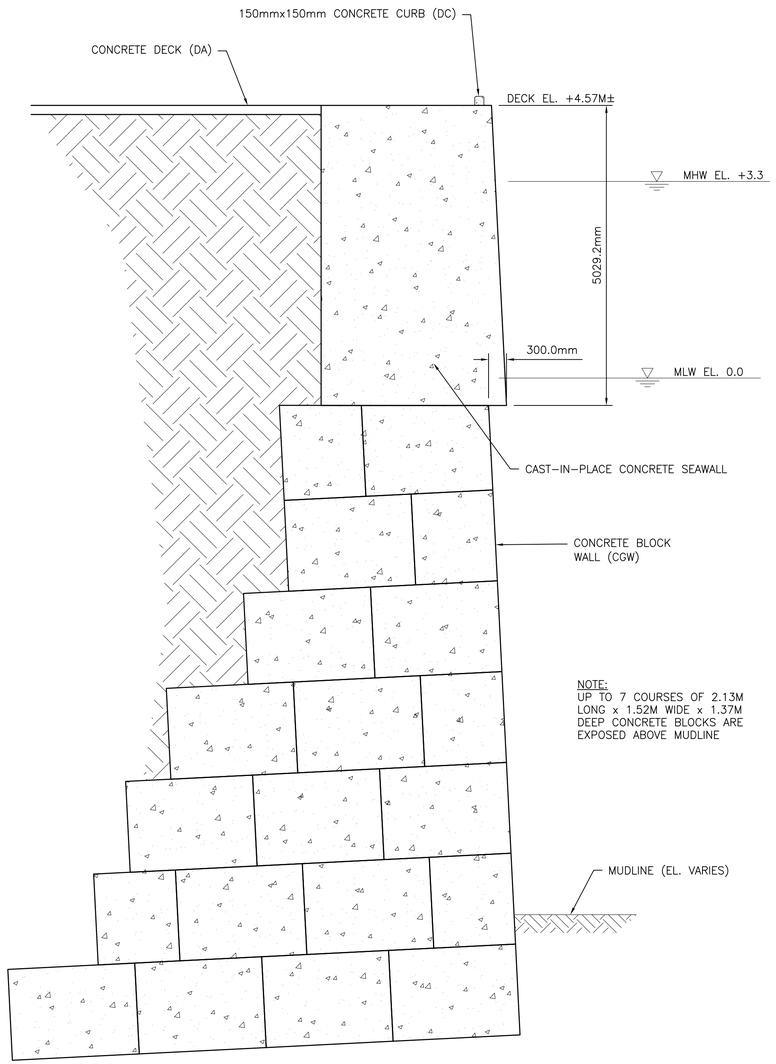

STA. 0+00 TO 0+82

FUELING WHARF M-621 SECTION

SCALE 1:50 S-101 B2

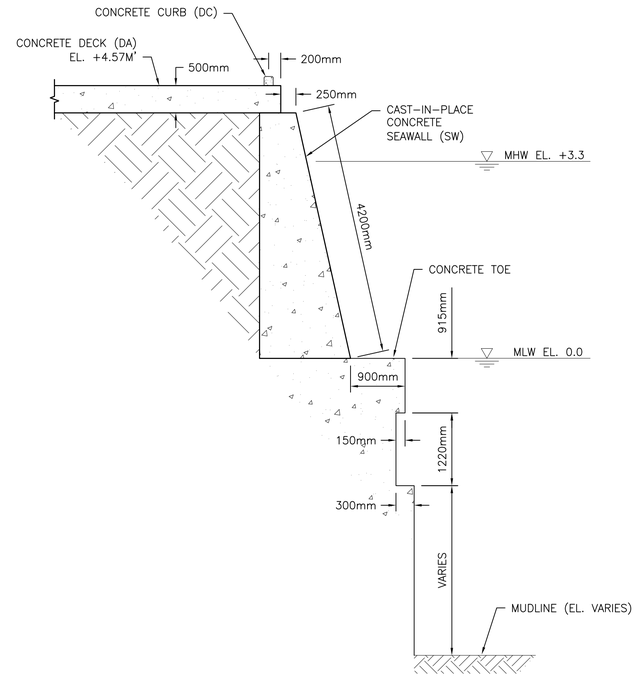

FUELING WHARF M-621 SECTION

SCALE 1:50 S-101 B4

0 1 2 5 m

GRAPHIC SCALE: 1:50

SYM	DESCRIPTION	DATE	APPR

NAVFAC

COMMONWEALTH OF MASSACHUSETTS
CHARLES MARSHALL ROBERTS
No. 50339
REGISTERED PROFESSIONAL ENGINEER
4/23/13
SEAL

CHILDS ENGINEERING CORPORATION
34 WILLIAM WAY BELLINGHAM, MASSACHUSETTS 02019 U.S.A.
Phone: (508) 966-9092
Fax: (508) 966-9096
E-mail: mail@childseng.com
A/E INFO

APPROVED

FOR COMMANDER NAVFAC

ACTIVITY

SATISFACTORY TO DATE

DES CMR DRW TEQ CHK CDS

BRANCH MANAGER

CHIEF ENG/ARCH

DEPARTMENT OF THE NAVY
NAVAL FACILITIES ENGINEERING COMMAND
NAVAL FACILITIES ENGINEERING COMMAND
FISC, IORIZAKI TERMINAL
SASEBO, JAPAN
REPAIRS TO FUELING WHARF M-621
SECTIONS

SCALE: AS NOTED

EPROJECT NO.:

CONSTR. CONTR. NO.

NAVFAC DRAWING NO. 10006580

SHEET 6 OF 12

S-301

DRAWFORM REVISION: 10 MARCH 2009

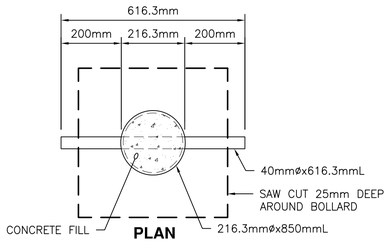

PLAN

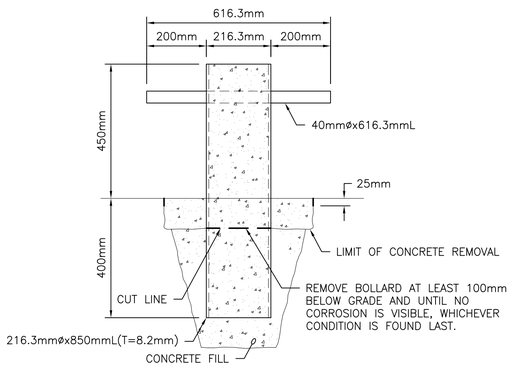

TYPICAL SECTION

DEMOLITION OF EXISTING BOLLARD (C1)

SCALE: 1:10 C-101

0 250 500 1000 mm

GRAPHIC SCALE: 1:10

DEMOLITION OF EXISTING BOLLARD

1. SQUARE OFF EDGES OF DEMOLITION AREA A MINIMUM OF 25mm DEEP BY SAW CUTTING.
2. CHIP BACK AND REMOVE CONCRETE TO A MINIMUM OF 100mm, IF CORROSION IS PRESENT ON BOLLARD 100mm BELOW CONCRETE SURFACE, EXCAVATE FURTHER UNTIL NO CORROSION IS PRESENT. REMAINING BOLLARD DEPTH SHALL BE ABANDONED IN PLACE.
3. CUT BOLLARD OFF AT BOTTOM OF EXCAVATION. REMOVE AND DISPOSE OF TOP SECTION OF BOLLARD.
4. PRESENT AREA TO THE CONTRACTING OFFICER FOR APPROVAL.
5. ONCE THE DEMOLISHED AREA IS APPROVED BY THE CONTRACTING OFFICER, FILL WITH CONCRETE RESTORATION MORTAR.

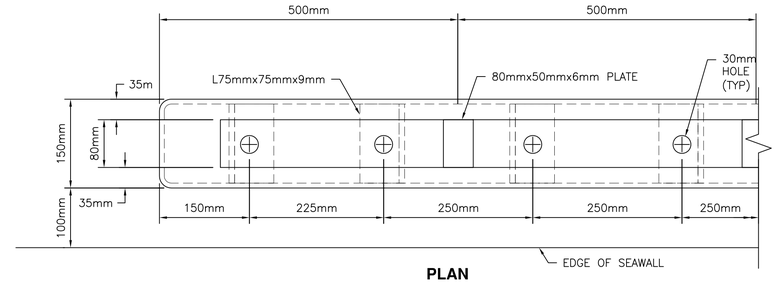

PLAN

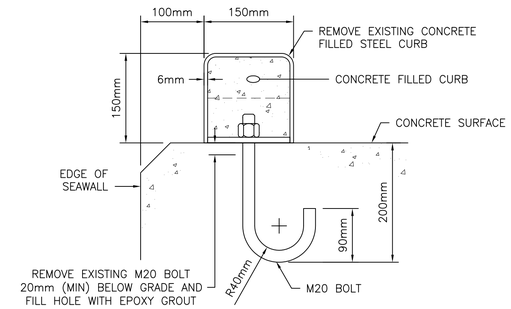

TYPICAL SECTION

DEMOLITION OF EXISTING CONCRETE CURB DETAIL (C4)

SCALE 1:5 C-101

0 100 200 500 mm

GRAPHIC SCALE: 1:5

SYM	DESCRIPTION	DATE	APPR

NAVFAC

COMMONWEALTH OF MASSACHUSETTS CHARLES MARSHALL ROBERTS No. 50339 REGISTERED PROFESSIONAL ENGINEER
4/23/13 SEAL

CHILDS ENGINEERING CORPORATION
34 WILLIAM WAY BELLINGHAM, MASSACHUSETTS 02019 U.S.A.
Phone: (508) 966-9092
Fax: (508) 966-9096
E-mail: mail@childseng.com
A/E INFO

APPROVED
FOR COMMANDER NAVFAC
ACTIVITY
SATISFACTORY TO DATE
DES CMR DRW TEQ CHK CDS
BRANCH MANAGER
CHIEF ENG/ARCH

DEPARTMENT OF THE NAVY
NAVAL FACILITIES ENGINEERING COMMAND
NAVAL FACILITIES ENGINEERING COMMAND
FISC, IORIZAKI TERMINAL
SASEBO, JAPAN
REPAIRS TO FUELING WHARF M-621
DEMOLITION DETAILS

SCALE: AS NOTED
EPROJECT NO.:
CONSTR. CONTR. NO.
NAVFAC DRAWING NO.
10006581
SHEET 7 OF 12
S-501

DRAWFORM REVISION: 10 MARCH 2009

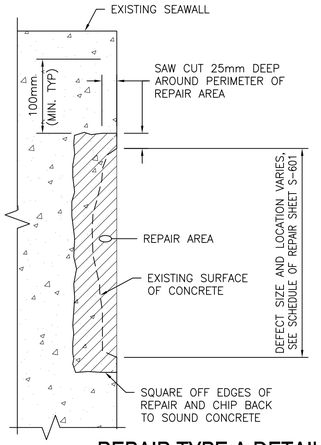

ABOVE WATER PARTIAL DEPTH SPALL REPAIR 25mm TO 75mm DEPTH WITHOUT REINFORCING STEEL FOR VERTICAL SURFACES USING HAND TROWELING PLACEMENT METHODS

1. PROVIDE SCAFFOLDING AS NECESSARY TO ACCESS THE WORK AREA.
2. SQUARE OFF LIMITS OF REPAIR AREA A MINIMUM OF 25mm DEEP BY SAW CUTTING. CHIP BACK TO SOUND CONCRETE. MINIMUM DEPTH OF REPAIR IS 25mm. CONTRACTOR SHALL VERIFY DEPTH TO REINFORCING PRIOR TO CUTTING.
3. PRESENT PREPARED REPAIR AREA TO THE CONTRACTING OFFICER FOR APPROVAL.
4. ONCE REPAIR AREA PRESENTATION IS APPROVED BY THE CONTRACTING OFFICER, FILL WITH CONCRETE RESTORATION MORTAR. RESTORE AND RECONSTRUCT THE ORIGINAL DIMENSIONS OF THE STRUCTURAL ELEMENT BEING REPAIRED. FOLLOW MANUFACTURER'S RECOMMENDATION FOR HAND PLACEMENT.
5. CURE FOR 7 DAYS ACCORDING TO MANUFACTURER'S RECOMMENDATIONS.

SCHEDULE OF MATERIALS

1. SPALLED CONCRETE AREAS SHALL BE REPAIRED WITH CONCRETE RESTORATION MORTAR AS SPECIFIED IN SPECIFICATION SECTION 03 01 30.71 CONCRETE REHABILITATION.

REPAIR TYPE A DETAIL (C1)

SCALE 1:5 S-101

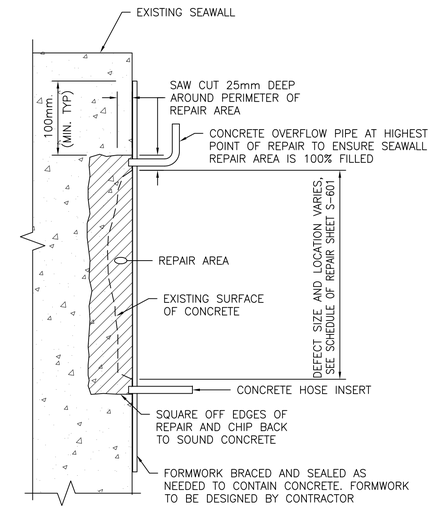

UNDERWATER PARTIAL DEPTH SPALL REPAIR 75mm AND GREATER WITHOUT REINFORCING STEEL USING FORM AND PUMP METHODS

1. CHIP OUT AND REMOVE ALL LOOSE CONCRETE FROM DAMAGED AREA.
2. SQUARE OFF LIMITS OF REPAIR AREA A MINIMUM OF 25mm DEEP BY SAW CUTTING OR CHIPPING. CHIP BACK TO SOUND CONCRETE. MINIMUM DEPTH FOR UNDERWATER REPAIRS IS 75mm. CONTRACTOR SHALL VERIFY DEPTH TO REINFORCING PRIOR TO CUTTING.
3. PRESENT PREPARED REPAIR AREA TO THE CONTRACTING OFFICER.
4. SECURE FORMS IN PLACE TO PREVENT CONCRETE FROM LEAKING OUT OF FORMS.
5. PRESENT FORMWORK TO THE CONTRACTING OFFICER FOR APPROVAL.
6. ONCE REPAIR AREA IS APPROVED BY THE CONTRACTING OFFICER, FILL WITH CONCRETE RESTORATION MORTAR. RESTORE AND RECONSTRUCT THE ORIGINAL DIMENSIONS OF THE STRUCTURAL ELEMENT BEING REPAIRED. FOLLOW MANUFACTURER'S RECOMMENDATION FOR FORM AND PUMP PLACEMENT.
7. LEAVE FORMS IN PLACE FOR A MINIMUM OF 7 DAYS.

SCHEDULE OF MATERIALS

1. SPALLED CONCRETE AREAS SHALL BE REPAIRED WITH CONCRETE RESTORATION MORTAR AS SPECIFIED IN SPECIFICATION SECTION 03 01 30.71 CONCRETE REHABILITATION.

REPAIR TYPE B DETAIL (C4)

SCALE 1:5 S-101

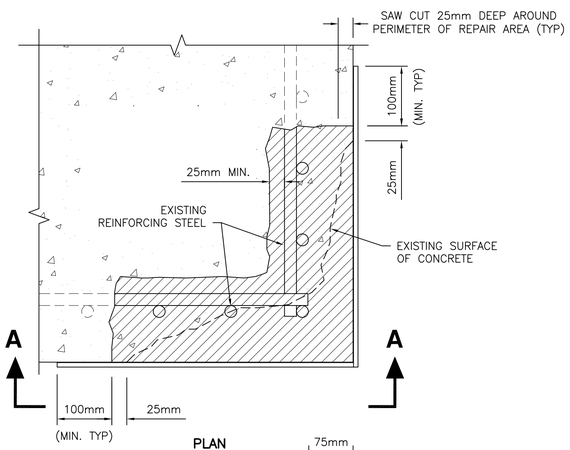

PLAN

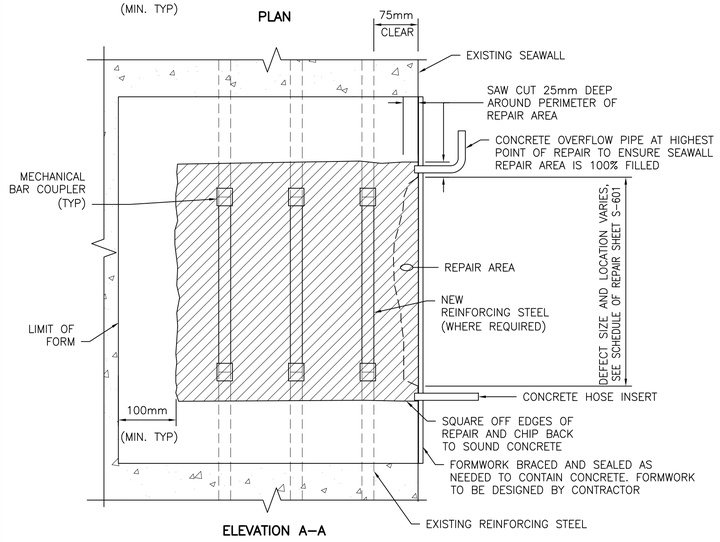

ELEVATION A–A

REPAIR TYPE C DETAIL (A2)

SCALE 1:5 S-101

GENERAL NOTES:

1. CONTRACTOR SHALL ASSUME 19mm REINFORCING BAR IS 120mm O.C. BOTH WAYS FOR BASIS OF BID.
2. ANY REINFORCING BAR WITH GREATER THAN 25% LOSS OF SECTION SHALL BE REPLACED.
3. THE CONTRACTOR SHALL EXPOSE AT LEAST 300mm TO EITHER SIDE OF ANY CORRODED REINFORCING BAR.
4. WHEN SAW CUTTING AROUND REPAIR AREA ALL SAW CUT EDGES SHALL BE SQUARE WITH A MAXIMUM OF SIX EDGES PER REPAIR AREA.

ABOVE WATER PARTIAL DEPTH SPALL REPAIR WITH EXPOSED REINFORCING STEEL FOR VERTICAL EDGES USING FORM AND PUMP METHODS

1. PROVIDE SCAFFOLDING AS NECESSARY TO ACCESS THE WORK AREA.
2. CHIP OUT AND REMOVE ALL LOOSE CONCRETE FROM DAMAGED AREA.
3. SQUARE OFF LIMITS OF REPAIR AREA A MINIMUM OF 25mm DEEP BY SAW CUTTING. CHIP BACK TO SOUND CONCRETE. CONTRACTOR SHALL VERIFY DEPTH TO REINFORCING PRIOR TO CUTTING.
4. WHERE STEEL REINFORCING IS EXPOSED, CHIP BACK BEHIND REINFORCING STEEL A MINIMUM OF 25mm. CLEAN ALL EXPOSED REINFORCING STEEL TO SA2. REFER TO SPECIFICATION SECTION 03 01 30.71 CONCRETE REHABILITATION FOR REPLACEMENT OF CORRODED REINFORCING STEEL USING MECHANICAL SPLICES.
5. PRESENT PREPARED REPAIR AREA TO THE CONTRACTING OFFICER FOR APPROVAL.
6. ONCE REPAIR AREA PREPARATION IS APPROVED BY THE CONTRACTING OFFICER, FILL WITH CONCRETE RESTORATION MORTAR. RESTORE AND RECONSTRUCT THE ORIGINAL DIMENSIONS OF THE STRUCTURAL ELEMENT BEING REPAIRED. FOLLOW MANUFACTURER'S RECOMMENDATION FOR FORM AND PUMP PLACEMENT.
7. LEAVE FORMS IN PLACE FOR A MINIMUM OF 7 DAYS.

SCHEDULE OF MATERIALS

1. SPALLED CONCRETE AREAS SHALL BE REPAIRED WITH CONCRETE RESTORATION MORTAR AS SPECIFIED IN SPECIFICATION SECTION 03 01 30.71 CONCRETE REHABILITATION.
2. ALL REINFORCING STEEL SHALL HAVE A MINIMUM Fy = 410 mPa.

NOTE:

LOCATION OF DEFECT/REPAIR IS IDENTIFIED USING THE STATIONING ALONG THE EDGE OF THE STRUCTURE WITH VERTICAL AND HORIZONTAL OFFSETS INDICATING THE RELEVANT DISTANCE FROM THAT EDGE TO THE CENTER OF THE DEFECT/REPAIR

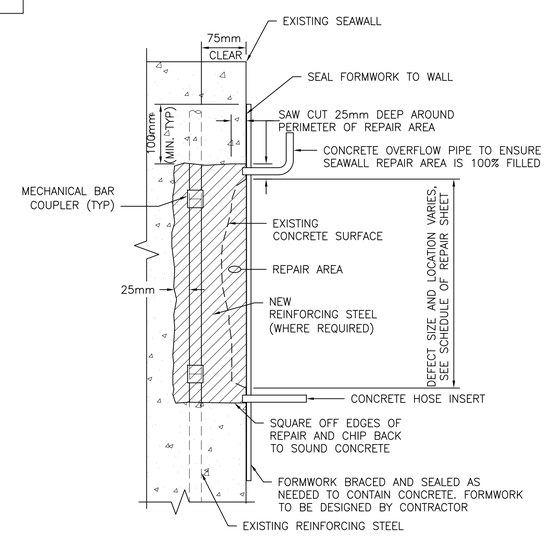

REPAIR TYPE D DETAIL (B4)

SCALE 1:5 S-101

UNDERWATER PARTIAL DEPTH SPALL REPAIR 75mm AND GREATER WITH EXPOSED REINFORCING STEEL USING FORM AND PUMP METHODS

1. CHIP OUT AND REMOVE ALL LOOSE CONCRETE AMD MARINE GROWTH FROM DAMAGED AREA.
2. SQUARE OFF LIMITS OF REPAIR AREA A MINIMUM OF 25mm DEEP BY SAW CUTTING OR CHIPPING. CHIP BACK TO SOUND CONCRETE. CONTRACTOR SHALL VERIFY DEPTH TO REINFORCING BAR PRIOR TO CUTTING.
3. WHERE STEEL REINFORCING IS EXPOSED, CHIP BACK BELOW REINFORCING STEEL A MINIMUM OF 25mm. CLEAN ALL EXPOSED REINFORCING STEEL TO SA2. REFER TO SPECIFICATION SECTION 03 01 30.71 CONCRETE REHABILITATION FOR REPLACEMENT OF CORRODED REINFORCING STEEL USING MECHANICAL SPLICES.
4. PRESENT PREPARED REPAIR AREA TO THE CONTRACTING OFFICER.
5. SECURE FORMS IN PLACE TO PREVENT CONCRETE FROM LEAKING OUT OF FORMS.
6. PRESENT FORMWORK TO THE CONTRACTING OFFICER FOR APPROVAL.
7. ONCE REPAIR AREA PREPARATION AND FORMWORK IS APPROVED BY THE CONTRACTING OFFICER, FILL WITH CONCRETE RESTORATION MORTAR. RESTORE AND RECONSTRUCT THE ORIGINAL DIMENSIONS OF THE STRUCTURAL ELEMENT BEING REPAIRED. FOLLOW MANUFACTURER'S RECOMMENDATION FOR FORM AND PUMP PLACEMENT.
8. LEAVE FORMS IN PLACE FOR A MINIMUM OF 7 DAYS.

SCHEDULE OF MATERIALS

1. SPALLED CONCRETE AREAS SHALL BE REPAIRED WITH CONCRETE RESTORATION MORTAR AS SPECIFIED IN SPECIFICATION SECTION 03 01 30.71 CONCRETE REHABILITATION.
2. ALL REINFORCING STEEL SHALL HAVE A MINIMUM Fy = 410 mPa.

0 100 200 500 mm

GRAPHIC SCALE: 1:5

SYM	DESCRIPTION	DATE	APPR

NAVFAC

COMMONWEALTH OF MASSACHUSETTS CHARLES MARSHALL ROBERTS No. 50339 REGISTERED PROFESSIONAL ENGINEER

4/23/13 SEAL

CHILDS ENGINEERING CORPORATION
34 WILLIAM WAY BELLINGHAM, MASSACHUSETTS 02019 U.S.A.
Phone: (508) 966-9092
Fax: (508) 966-9096
E-mail: mail@childseng.com
A/E INFO.

APPROVED

FOR COMMANDER NAVFAC

ACTIVITY

SATISFACTORY TO DATE

DES CMR DRW TEQ CHK CDS

BRANCH MANAGER

CHIEF ENG/ARCH

DEPARTMENT OF THE NAVY
NAVAL FACILITIES ENGINEERING COMMAND
NAVAL FACILITIES ENGINEERING COMMAND
FISC, IORIZAKI TERMINAL
SASEBO, JAPAN

REPAIRS TO FUELING WHARF M-621

REPAIR TYPE A – D DETAILS

SCALE: AS NOTED

EPROJECT NO.:

CONSTR. CONTR. NO.

NAVFAC DRAWING NO. 10006582

SHEET 8 OF 12

S-502

DRAWFORM REVISION: 10 MARCH 2009

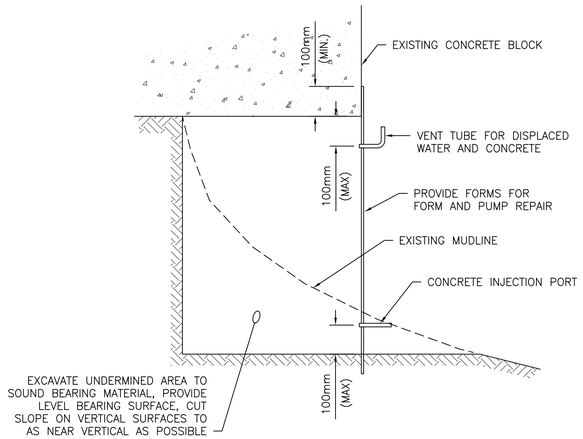

REPAIR TYPE E DETAIL

SCALE 1:10 S-101 C3

UNDERMINING OF SEAWALL

1. CHIP OUT AND REMOVE ALL LOOSE MATERIAL/DEBRIS FROM UNDERMINED AREA. EXCAVATE SEDIMENT AND LOOSE DEBRIS TO LINES SHOWN.
2. PRESENT PREPARED REPAIR AREA TO THE CONTRACTING OFFICER.
3. SECURE FORMWORK IN PLACE. BRACE AS REQUIRED TO RESIST PRESSURE FROM CONCRETE.
4. PRESENT FORMWORK TO THE CONTRACTING OFFICER FOR APPROVAL.
5. ONCE REPAIR PREPARATION AND FORMWORK IS APPROVED BY THE CONTRACTING OFFICER, INJECT WITH CONCRETE RESTORATION MORTAR. INJECT MORTAR THROUGH PORT(S) AT BOTTOM OF FORM STARTING AT ONE END OF REPAIR AREA AND ADVANCING TO THE OTHER END OF REPAIR AREA. PUMP MORTAR INTO FORMS UNTIL ALL WATER IS DISPLACED AND FRESH MORTAR IS PUMPED OUT OF VENT TUBES.

SCHEDULE OF MATERIALS

1. UNDERMINED AREAS SHALL BE REPAIRED WITH CONCRETE RESTORATION MORTAR AS SPECIFIED IN SPECIFICATION SECTION 03 01 30.71 CONCRETE REHABILITATION.

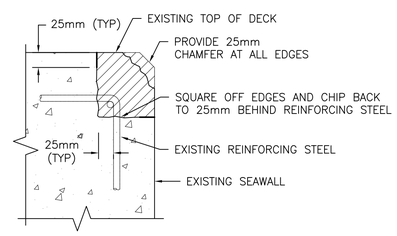

REPAIR TYPE F DETAIL

SCALE 1:5 S-101 B3

EDGE SPALL/ABRASION REPAIR USING FORM AND POUR METHODS

1. PROVIDE SCAFFOLDING AS NECESSARY TO ACCESS WORK AREA.
2. SQUARE OFF LIMITS OF REPAIR AREA A MINIMUM OF 25mm DEEP BY SAW CUTTING. CHIP BACK TO SOUND CONCRETE.
3. WHERE STEEL REINFORCING IS EXPOSED, CHIP BACK BELOW REINFORCING STEEL A MINIMUM OF 25mm. CLEAN EXPOSED REINFORCING STEEL TO SA2. REFER TO SPECIFICATIONS SECTION 03 01 30.71 CONCRETE REHABILITATION FOR REPLACEMENT OF CORRODED REINFORCING STEEL.
4. PRESENT PREPARED REPAIR AREA TO THE CONTRACTING OFFICER FOR APPROVAL.
5. ONCE REPAIR AREA PREPARATION IS APPROVED BY THE CONTRACTING OFFICER, FORM AND FILL WITH CONCRETE RESTORATION MORTAR. RESTORE AND RECONSTRUCT THE ORIGINAL DIMENSIONS OF THE STRUCTURAL ELEMENT BEING REPAIRED. FOLLOW MANUFACTURER'S RECOMMENDATION FOR PLACEMENT.
6. LEAVE FORMS IN PLACE FOR A MINIMUM OF 7 DAYS.

SCHEDULE OF MATERIALS

1. SPALLED CONCRETE AREAS SHALL BE REPAIRED WITH CONCRETE RESTORATION MORTAR AS SPECIFIED IN SPECIFICATION SECTION 03 01 30.71 CONCRETE REHABILITATION.
2. ALL REINFORCING STEEL SHALL HAVE A MINIMUM Fy = 410 mPa.

NOTE:

LOCATION OF DEFECT/REPAIR IS IDENTIFIED USING THE STATIONING ALONG THE EDGE OF THE STRUCTURE WITH VERTICAL AND HORIZONTAL OFFSETS INDICATING THE RELEVANT DISTANCE FROM THAT EDGE TO THE CENTER OF THE DEFECT/REPAIR

0 0.25 0.5 1.0 m

GRAPHIC SCALE: 1:10

0 100 200 500 mm

GRAPHIC SCALE: 1:5

SYM	DESCRIPTION	DATE	APPR

NAVFAC

COMMONWEALTH OF MASSACHUSETTS
CHARLES MARSHALL ROBERTS
No. 50339
REGISTERED PROFESSIONAL ENGINEER
4/23/13 SEAL

CHILDS ENGINEERING CORPORATION
34 WILLIAM WAY BELLINGHAM, MASSACHUSETTS 02019 U.S.A.
Phone: (508) 966-9092
Fax: (508) 966-9096
E-mail: mail@childseng.com
A/E INFO

APPROVED
FOR COMMANDER NAVFAC
ACTIVITY
SATISFACTORY TO DATE
DES CMR DRW TEQ CHK CDS
BRANCH MANAGER
CHIEF ENG/ARCH

DEPARTMENT OF THE NAVY
NAVAL FACILITIES ENGINEERING COMMAND
NAVAL FACILITIES ENGINEERING COMMAND
FISC, IORIZAKI TERMINAL
SASEBO, JAPAN
REPAIRS TO FUELING WHARF M-621
REPAIR TYPE E & F DETAILS

SCALE: AS NOTED
EPROJECT NO.:
CONSTR. CONTR. NO.
NAVFAC DRAWING NO. 10006583
SHEET 9 OF 12
S-503

DRAWFORM REVISION: 10 MARCH 2009

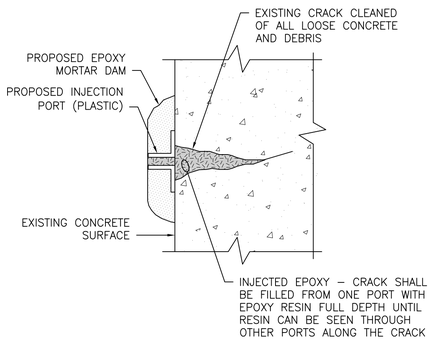

REPAIR TYPE G DETAIL (C1)

SCALE 1:5 S-101

EPOXY INJECTION CRACK REPAIR BY PRESSURE INJECTION

1. PROVIDE SCAFFOLDING AS NECESSARY TO ACCESS THE WORK AREA.
2. CLEAN SURFACE OF ALL CONCRETE DUST, LOOSE CONCRETE, GREASE. OIL AND OTHER MATERIAL THAT WILL EFFECT THE BOND OF THE EPOXY MORTAR DAM.
3. SET APPROPRIATE INJECTION PORTS OVER CRACK AS RECOMMENDED BY THE EPOXY INJECTION SYSTEM MANUFACTURER WITH EPOXY MORTAR DAM.
4. PRESENT PREPARED REPAIR AREA TO THE CONTRACTING OFFICER FOR APPROVAL.
5. SEAL CRACKS AND PORTS WITH EPOXY MORTAR. TAKE CARE TO ENSURE THAT THE PORTS PROVIDE A CLEAN PATH FOR INJECTING EPOXY RESIN INTO THE CRACK.
6. USING AUTOMATED MIXING SYSTEM AND INJECTING EQUIPMENT INJECT EPOXY RESIN INTO CRACKS THROUGH PORTS. START AT ONE END OF CRACK (LOWER END) AND INJECT EPOXY RESIN INTO PORT UNTIL RESIN APPEARS AT THE NEXT PORT. PLUG PORT WHERE EPOXY RESIN IS BEING INJECTED AND MOVE NOZZLE TO PORT WHERE EPOXY RESIN HAS APPEARED. CONTINUE PUMPING REPEATING PROCEDURE UNTIL ALL THE PORTS AND CRACK HAS BEEN FILLED COMPLETELY WITH EPOXY RESIN.

SCHEDULE OF MATERIALS

1. ACTIVE PROTECTION COATING CONTAINING CORROSION INHIBITORS SHALL BE APPLIED TO ALL EXPOSED METALLIC SURFACES.
2. CRACKS SHALL BE REPAIRED WITH EPOXY RESIN AS SPECIFIED IN SPECIFICATION SECTION 03 01 30.71 CONCRETE REHABILITATION.

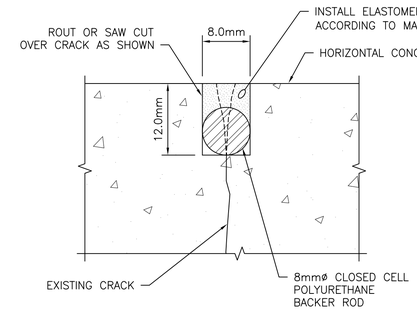

REPAIR TYPE H DETAIL (C4)

SCALE 1:0.5 S-101

CRACK REPAIR WITH ELASTOMERIC SEALANT

1. CLEAN REPAIR AREA TO REMOVE DEBRIS, ENSURE THAT THE CRACKS ARE NOT CONTAMINATED WITH ANY BOND INHIBITING MATERIALS SUCH AS OIL AND GREASE. ROUT OR SAW CUT OVER CRACK TO PREPARE SURFACE FOR SEALANT.
2. PRESENT REPAIR AREA TO THE CONTRACTING OFFICER FOR APPROVAL.
3. INSERT BACKER ROD OR BOND BREAKER TAPE INTO BOTTOM OF GROOVE.
4. INSERT SEALANT INTO GROOVE OVER BOND BREAKER.
5. PROTECT JOINT UNTIL SEALANT HAS CURED.

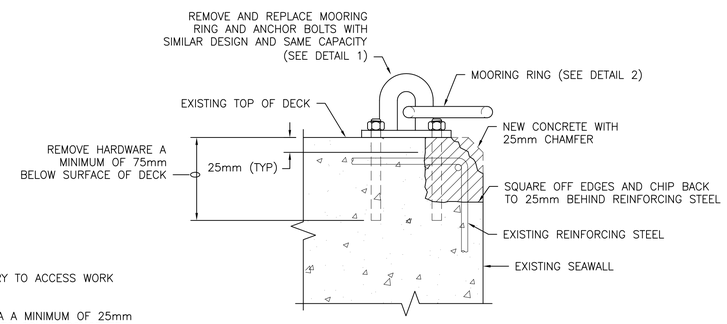

MOORING RING SPALL REPAIR

1. PROVIDE SCAFFOLDING AS NECESSARY TO ACCESS WORK AREA.
2. REMOVE EXISTING MOORING RING AND ASSOCIATED HARDWARE. ALL HARDWARE MUST BE REMOVED A MINIMUM OF 75mm BELOW SURFACE OF DECK.
3. SQUARE OFF LIMITS OF REPAIR AREA A MINIMUM OF 25mm DEEP BY SAW CUTTING. CHIP BACK TO SOUND CONCRETE. CONTRACTOR SHALL VERIFY DEPTH TO REINFORCING PRIOR TO CUTTING.
4. WHERE STEEL REINFORCING IS EXPOSED, CHIP BACK BELOW REINFORCING STEEL A MINIMUM OF 25mm. CLEAN EXPOSED REINFORCING STEEL TO SA2. REFER TO SPECIFICATIONS SECTION 03 01 30.71 CONCRETE REHABILITATION FOR REPLACEMENT FOR CORRODED REINFORCING STEEL.
5. PRESENT PREPARED REPAIR AREA TO THE CONTRACTING OFFICER FOR APPROVAL.
6. ONCE REPAIR AREA PREPARATION IS APPROVED BY THE CONTRACTING OFFICER, FORM AND FILL WITH CONCRETE RESTORATION MORTAR. RESTORE AND RECONSTRUCT THE ORIGINAL DIMENSIONS OF THE STRUCTURAL ELEMENT BEING REPAIRED. FOLLOW MANUFACTURER'S RECOMMENDATION FOR PLACEMENT.
7. INSTALL NEW MOORING RING OF SIMILAR DESIGN AND WITH SAME CAPACITY, AT OR AS CLOSE TO ORIGINAL LOCATION AS POSSIBLE WITHOUT COMPROMISING CAPACITY.

SCHEDULE OF MATERIALS

1. SPALLED CONCRETE AREAS SHALL BE REPAIRED WITH CONCRETE RESTORATION MORTAR AS SPECIFIED IN SPECIFICATION SECTION 03 01 30.71 CONCRETE REHABILITATION.
2. ALL REINFORCING STEEL SHALL HAVE A MINIMUM Fy = 410 mPa.

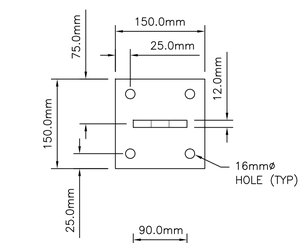

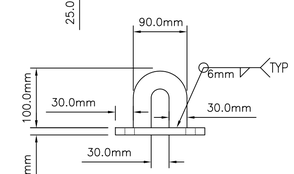

DETAIL 1 (B5)

SCALE 1:5 S-504

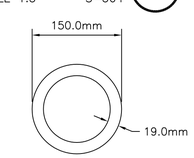

DETAIL 2 (A5)

SCALE 1:5 S-504

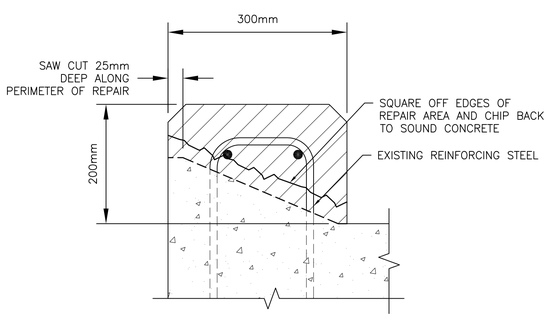

REPAIR TYPE J DETAIL (B1)

SCALE 1:5 S-101

CONCRETE CURB REPAIR

1. PROVIDE SCAFFOLDING AS NECESSARY TO ACCESS WORK AREA.
2. SQUARE OFF LIMITS OF REPAIR AREA A MINIMUM OF 25mm DEEP BY SAW CUTTING. CHIP BACK TO SOUND CONCRETE. CONTRACTOR SHALL VERIFY DEPTH OF REINFORCING PRIOR TO CUTTING.
3. WHERE STEEL REINFORCING IS EXPOSED, CHIP BACK BELOW REINFORCING STEEL A MINIMUM OF 25mm. CLEAN EXPOSED REINFORCING STEEL TO SA2. REFER TO SPECIFICATIONS SECTION 03 01 30.71 CONCRETE REHABILITATION FOR REPLACEMENT FOR CORRODED REINFORCING STEEL.
4. PRESENT PREPARED REPAIR AREA TO THE CONTRACTION OFFICER FOR APPROVAL.
5. ONCE REPAIR AREA PREPARATION IS APPROVED BY THE CONTRACTING OFFICER, FORM AND FILL WITH CONCRETE RESTORATION MORTAR. RESTORE AND RECONSTRUCT THE ORIGINAL DIMENSIONS OF THE STRUCTURAL ELEMENT BEING REPAIRED. FOLLOW MANUFACTURER'S RECOMMENDATION FOR PLACEMENT.

SCHEDULE OF MATERIALS

1. SPALLED CONCRETE AREAS SHALL BE REPAIRED WITH CONCRETE RESTORATION MORTAR AS SPECIFIED IN SPECIFICATION SECTION 03 01 30.71 CONCRETE REHABILITATION.
2. ALL REINFORCING STEEL SHALL HAVE A MINIMUM Fy = 410 mPa.

REPAIR TYPE K DETAIL (B3)

SCALE 1:5 S-101

NOTE:

LOCATION OF DEFECT/REPAIR IS IDENTIFIED USING THE STATIONING ALONG THE EDGE OF THE STRUCTURE WITH VERTICAL AND HORIZONTAL OFFSETS INDICATING THE RELEVANT DISTANCE FROM THAT EDGE TO THE CENTER OF THE DEFECT/REPAIR

0 10 20 40 mm

GRAPHIC SCALE: 1:0.5

0 100 200 500 mm

GRAPHIC SCALE: 1:5

SYM	DESCRIPTION	DATE	APPR

NAVFAC

COMMONWEALTH OF MASSACHUSETTS CHARLES MARSHALL ROBERTS No. 50339 REGISTERED PROFESSIONAL ENGINEER

4/23/13 SEAL

CHILDS ENGINEERING CORPORATION
34 WILLIAM WAY BELLINGHAM, MASSACHUSETTS 02019 U.S.A.
Phone: (508) 966-9092
Fax: (508) 966-9096
E-mail: mail@childseng.com
A/E INFO.

APPROVED

FOR COMMANDER NAVFAC

ACTIVITY

SATISFACTORY TO DATE

DES CMR DRW TEQ CHK CDS

<<PM/DM>>

BRANCH MANAGER

CHIEF ENG/ARCH

<<XXX>>

DEPARTMENT OF THE NAVY
NAVAL FACILITIES ENGINEERING COMMAND
NAVAL FACILITIES ENGINEERING COMMAND

FISC, IORIZAKI TERMINAL
SASEBO, JAPAN

REPAIRS TO FUELING WHARF M-621

REPAIR TYPE G – K DETAILS

SCALE: AS NOTED

EPROJECT NO.:

CONSTR. CONTR. NO.

NAVFAC DRAWING NO.
10006584

SHEET 10 OF 12

S-504

DRAWFORM REVISION: 10 MARCH 2009

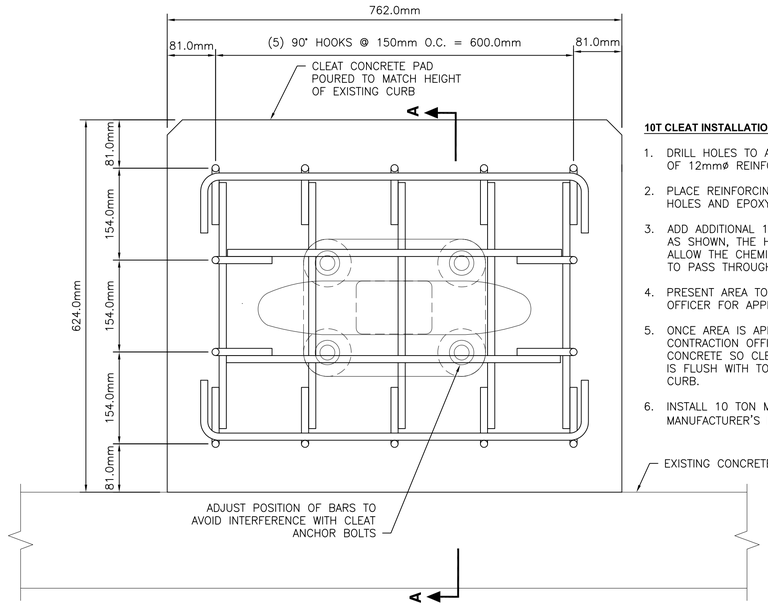

PLAN

10T CLEAT INSTALLATION

1. DRILL HOLES TO ALLOW PLACEMENT OF 12mmø REINFORCING BAR.
2. PLACE REINFORCING BARS IN DRILLED HOLES AND EPOXY GROUT IN PLACE.
3. ADD ADDITIONAL 12mmø REINFORCING AS SHOWN, THE HOLLOW TUBE TO ALLOW THE CHEMICAL ANCHOR BOLT TO PASS THROUGH, AND FORMWORK.
4. PRESENT AREA TO CONTRACTING OFFICER FOR APPROVAL.
5. ONCE AREA IS APPROVED BY CONTRACTION OFFICER. POUR CONCRETE SO CLEAT MOORING PAD IS FLUSH WITH TOP OF EXISTING CURB.
6. INSTALL 10 TON MOORING CLEAT PER MANUFACTURER'S RECOMMENDATIONS.

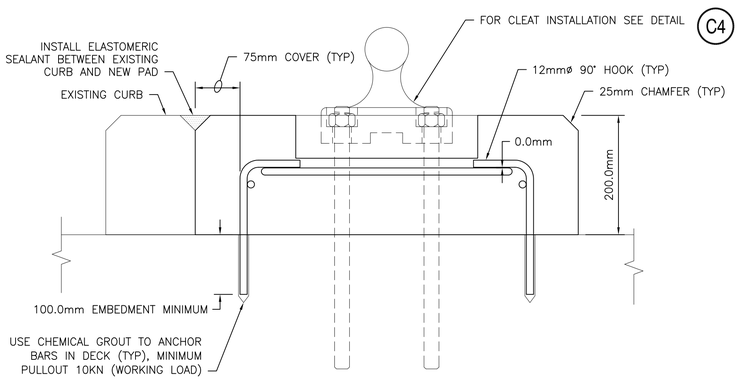

SECTION A-A

10T CLEAT CONCRETE PAD REINFORCING DETAIL (B2)

SCALE 1:5 S-101

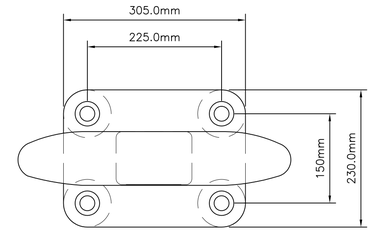

PLAN

10T CLEAT INSTALLATION

1. DRILL HOLES AS NEEDED FOR CHEMICAL ANCHOR BOLTS.
2. PRESENT AREA TO CONTRACTING OFFICER FOR APPROVAL.
3. ONCE AREA IS APPROVED BY CONTRACTION OFFICER. INSTALL 10 TON MOORING CLEAT AS PER MANUFACTURER'S RECOMMENDATIONS.

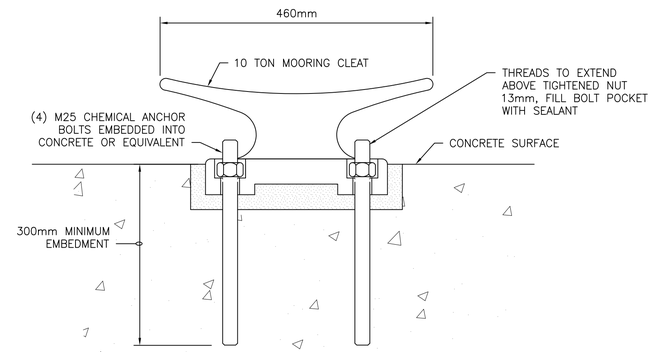

ELEVATION AT DECK LOCATIONS

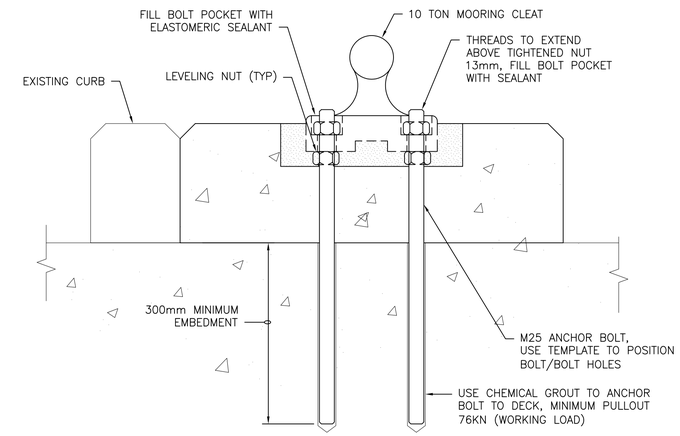

SECTION AT CURB LOCATIONS

10T CLEAT INSTALLATION DETAIL (C4)

SCALE 1:5 S-101, S-505

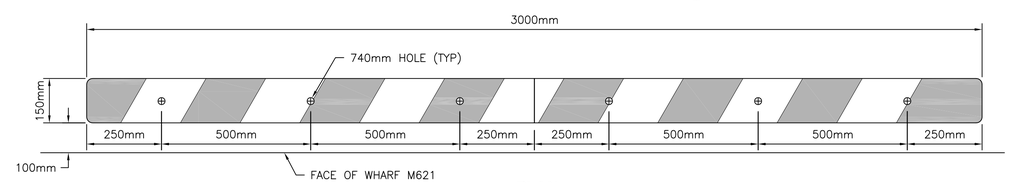

PLAN

SCALE1:10

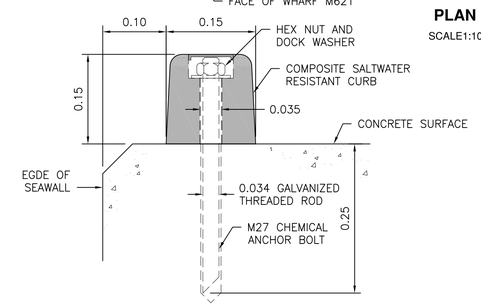

TYPICAL SECTION

SCALE 1:5

NOTES:

1. PROVIDE SCAFFOLDING AS NECESSARY TO ACCESS THE WORK AREA.
2. DRILL HOLES FOR CURB PLACEMENT, MAKING SURE EXISTING CURB HARDWARE FROM DEMOLISHED CURB WILL NOT COMPROMISE THE STRENGTH OF THE CONNECTION.
3. PRESENT AREA TO THE CONTRACTING OFFICER FOR APPROVAL.
4. ONCE AREA IS APPROVED BY THE CONTRACTING OFFICER, INSTALL THE NEW CURB AS RECOMMENDED BY THE MANUFACTURER.

INSTALLATION OF NEW PIER M621 CURB DETAIL (A4)

SCALE: AS NOTED S-101, S-505

0 0.25 0.5 1.0 m

GRAPHIC SCALE: 1:10

0 100 200 500 mm

GRAPHIC SCALE: 1:5

SYM	DESCRIPTION	DATE	APPR

NAVFAC

COMMONWEALTH OF MASSACHUSETTS CHARLES MARSHALL ROBERTS No. 50339 REGISTERED PROFESSIONAL ENGINEER
4/23/13
SEAL

CHILDS ENGINEERING CORPORATION
34 WILLIAM WAY BELLINGHAM, MASSACHUSETTS 02019 U.S.A.
Phone: (508) 966-9092
Fax: (508) 966-9096
E-mail: mail@childseng.com
A/E INFO

APPROVED

FOR COMMANDER NAVFAC

ACTIVITY

SATISFACTORY TO DATE

DES CMR DRW TEQ CHK CDS

BRANCH MANAGER

CHIEF ENG/ARCH

DEPARTMENT OF THE NAVY
NAVAL FACILITIES ENGINEERING COMMAND
NAVAL FACILITIES ENGINEERING COMMAND
FISC, IORIZAKI TERMINAL
SASEBO, JAPAN

REPAIRS TO FUELING WHARF M-621

CLEAT AND CURB INSTALLATION DETAILS

SCALE: AS NOTED

EPROJECT NO.:

CONSTR. CONTR. NO.

NAVFAC DRAWING NO. 10006585

SHEET 11 OF 12

S-505

DRAWFORM REVISION: 10 MARCH 2009

REPAIR SCHEDULE

Defect ID No.	Asset Type	Defect Location			Fac. Sec.	Defect Type	Repair Type	Area (M^2)	Depth (mm)
		Station	Hor. Offset	Ver. Offset					
8	CGW	0+3.1	6.1	0.9	M-621	FRS	A	0.2	25
9	SW	0+3.1	9.1	0.9	M-621	CCS	A	0.2	25
23	DA	0+4.6	2.4	0.0	M-621	FRS	A	0.2	25
25	DA	0+19.8	5.8	0.0	M-621	FRS	A	0.1	50
42	DA	0+47.8	23.2	0.0	M-621	FRS	A	0.2	25
53	DA	0+13	18	0.0	M-622	OCS	A	0.1	25

Defect ID No.	Asset Type	Defect Location			Fac. Sec.	Defect Type	Repair Type	Area (M^2)	Depth (mm)
		Station	Hor. Offset	Ver. Offset					
4	SW	0+3.4	18.3	2.4	M-621	DSG	B	0.6	100
14	CGW	0+39.0	0.0	4.9	M-621	DSC	B	11.8	100
20	CGW	0+80.2	0.0	4.9	M-621	DSC	B	1.1	150

Defect ID No.	Asset Type	Defect Location			Fac. Sec.	Defect Type	Repair Type	Area (M^2)	Depth (mm)
		Station	Hor. Offset	Ver. Offset					
21	CGW	0+81.1	0.0	2.4	M-621	FRS	C	0.3	75

Defect ID No.	Asset Type	Defect Location			Fac. Sec.	Defect Type	Repair Type	Area (M^2)	Depth (mm)	Exp Bars (#)
		Station	Hor. Offset	Ver. Offset						
6	CGW	0+00	4.6	3.7	M-621	OCS	D	1.9	450	15

Defect ID No.	Asset Type	Defect Location			Fac. Sec.	Defect Type	Repair Type	Length (m)	Depth (mm)
		Station	Hor. Offset	Ver. Offset					
1	SW	0+7.3	18.3	4.6	M-621	UND	E	3.0	300

Defect ID No.	Asset Type	Defect Location		Fac. Sec.	Defect Type	Repair Type	Area (M^2)	Depth (mm)	Exp Bars (#)
		Station	Hor. Offset						
7	DA	0+1.2	0.0	M-621	FRS	F	0.1	75	1
11	DA	0+19.8	0.0	M-621	FRS	F	0.3	150	0
12	DA	0+24.4	0.0	M-621	FRS	F	0.2	100	0
13	DA	0+35.1	0.0	M-621	FRS	F	0.1	50	0
15	DA	0+41.2	0.0	M-621	FRS	F	0.1	75	0
17	DA	0+57.9	0.0	M-621	FRS	F	0.1	75	0
18	DA	0+59.1	0.0	M-621	FRS	F	0.1	50	0
19	DA	0+63.4	0.0	M-621	FRS	F	0.1	50	0
26	DC	0+19.2	0.3	M-621	FRS	F	0.1	75	0
57	DA	0+0	0.0	M-626	OCS	F	0.2	50	0
62	DA	0+52	0.0	M-631	FRS	F	0.5	50	0

Defect ID No.	Asset Type	Defect Location			Fac. Sec.	Defect Type	Repair Type	Length (m)	Width (mm)
		Station	Hor. Offset	Ver. Offset					
22	CGW	0+81.9	9.1	1.2	M-621	CRH	G	6.1	3
48	DC	0+70.7	2.1	0.0	M-621	CRT	G	1.2	6

Defect ID No.	Asset Type	Defect Location		Fac. Sec.	Defect Type	Repair Type	Length (m)	Width (mm)
		Station	Hor. Offset					
5	DA	0+3.4	13.7	M-621	CRT	H	3.7	3
24	DA	0+19.8	9.1	M-621	CRT	H	0.9	3
28	DA	0+22.2	15.9	M-621	CRL	H	3.4	6
29	DA	0+22.2	16.5	M-621	CRT	H	1.5	6
30	DA	0+22.2	17.4	M-621	CRL	H	3.4	6
32	DA	0+42.4	17.4	M-621	CRL	H	0.6	6
33	DA	0+42.4	19.2	M-621	CRL	H	0.6	6
34	DA	0+42.4	20.4	M-621	CRL	H	0.6	6
35	DA	0+42.4	22.2	M-621	CRL	H	0.6	6
36	DA	0+42.7	7.0	M-621	CRL	H	2.4	6
37	DA	0+44.8	15.9	M-621	CRL	H	0.9	6
38	DA	0+44.8	17.4	M-621	CRL	H	0.9	6
39	DA	0+44.8	19.2	M-621	CRL	H	0.9	6
40	DA	0+44.8	20.7	M-621	CRL	H	1.2	6
44	DA	0+58.2	1.8	M-621	CRT	H	1.2	3
47	DA	0+67.4	15.2	M-621	CRT	H	0.9	6
50	DA	0+81.1	4.6	M-621	CRL	H	0.9	3
51	DA	0+81.1	5.5	M-621	CRT	H	3.7	6
59	DA	0+22.5	0	M-628	CRL	H	1.0	10

Defect ID No.	Asset Type	Defect Location		Fac. Sec.	Defect Type	Repair Type	Area (M^2)	Depth (mm)
		Station	Hor. Offset					
45	DC	0+60.9	0.3	M-621	FRS	J	0.2	25
46	DC	0+60.9	3.4	M-621	ABS	J	0.1	25
60	DC	0+23	6	M-629	FRS	J	0.5	100

Defect ID No.	Asset Type	Defect Location		Fac. Sec.	Defect Type	Repair Type	Length (m)
		Station	Hor. Offset				
54	DA	0+8.5	18.0	M-623	CCS	K	0.5
55	DA	0+3	18.0	M-624	CCS	K	0.5
56	DA	0+3	6.0	M-625	CCS	K	0.5
58	DA	0+11.5	0.0	M-627	CCS	K	0.5
61	DA	0+38	0.0	M-630	CCS	K	0.5
63	DA	0+52	0.0	M-632	CCS	K	0.5
64	DA	0+65.5	0.0	M-633	CCS	K	0.5
65	DA	0+75.5	0.0	M-634	CCS	K	0.5
66	DA	0+82	16.5	M-635	CCS	K	0.5

NOTE:
SEE SHEETS S-502 TO S-504 FOR REPAIR DETAILS.

BOLLARD CLEAN AND RECOAT SCHEDULE

BOLLARD	CLEAN AND RECOAT	ADD I.D.
M621-2	YES	N/A
M621-4	YES	N/A
M621-5	YES	N/A
M621-7	YES	N/A
M621-9	YES	N/A
M621-10	YES	N/A
M621-12	YES	N/A
M621-14	YES	N/A

NOTE:

BOLLARDS SHALL BE CLEANED AND RECOATED AS SPECIFIED IN SECTION 05 30 00 .01 MOORING HARDWARE.

ASSET TYPE KEY

CGW = CONCRETE GRAVITY WALL
DU = DECK UNDER
DA = DECK ABOVE
DC = DECK CURB

DEFECT TYPE KEY

ABS = ABRAISON
CCS = CLOSED CORROSION SPALL
FRS = FRACTURE SPALL
VOD = VOID
OCS = OPEN CORROSION SPALL
CRD = DIAGONAL CRACK
CRH = HORIZONTAL CRACK
CRV = VERTICAL CRACK
CRL = LONGITUDINAL CRACK
CRT = TANGENTAL CRACK
DSG = DISINTEGRATION
WEA = WEATHERING
MIS = MISSING
UND = UNDERMINING
MDE = MORTAR DEGRADATION
BRK = BROKEN

NOTES

1. DIMENSIONS IN SCHEDULE FOR AREA AND DEPTH INDICATE THE DIMENSIONS OF THE DEFECT. THE TOTAL BELOW HAS HAD A MINIMUM OF 30% ADDED TO THE AREA OR LENGTH FOR BIDDING.
2. REFER TO SHEETS C-101 AND S-101 FOR STATIONING AND HORIZONTAL OFFSETS AND DEFECT NUMBERS.

REPAIR QUANTITIES FOR BIDDING PURPOSES

REPAIR	QUANTITY
A	1.3m²
B	17.5m²
C	0.4m²
D	2.5m²
E	4.0m
F	2.5m²
G	9.5m
H	38.0m
J	1.1m²
K	6.0m

SYM	DESCRIPTION	DATE	APPR

NAVFAC

COMMONWEALTH OF MASSACHUSETTS
CHARLES MARSHALL ROBERTS
No. 50339
REGISTERED PROFESSIONAL ENGINEER
4/23/13
SEAL

CHILDS ENGINEERING CORPORATION
34 WILLIAM WAY BELLINGHAM, MASSACHUSETTS 02019 U.S.A.
Phone: (508) 966-9092
Fax: (508) 966-9096
E-mail: mail@childseng.com
A/E INFO

APPROVED
FOR COMMANDER NAVFAC
ACTIVITY
SATISFACTORY TO DATE
DES CMR DRW TEQ CHK CDS
BRANCH MANAGER
CHIEF ENG/ARCH

DEPARTMENT OF THE NAVY
NAVAL FACILITIES ENGINEERING COMMAND
NAVAL FACILITIES ENGINEERING COMMAND
FISC, IORIZAKI TERMINAL
SASEBO, JAPAN

REPAIRS TO FUELING WHARF M-621

REPAIR SCHEDULE

SCALE: NONE
EPROJECT NO.:
CONSTR. CONTR. NO.
NAVFAC DRAWING NO. 10006586
SHEET 12 OF 12
S-601

DRAWFORM REVISION: 10 MARCH 2009