DEPARTMENT OF THE NAVY,
NAVAL FACILITIES ENGINEERING AND
EXPEDITIONARY WARFARE CENTER

# REPAIRS TO FUELING PIER 170

## AKASAKI TERMINAL, SASEBO, JAPAN

JAPAN MAP

AREA MAP

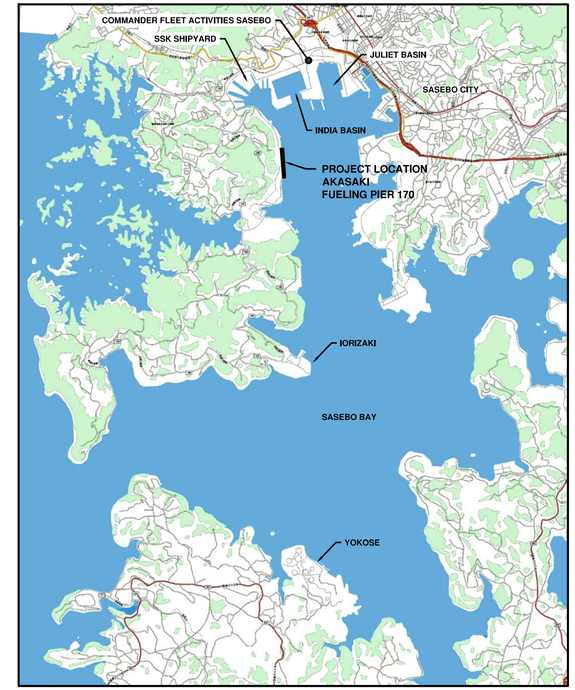


SASEBO MAP

| SYM | DESCRIPTION | DATE | APPR |
|---|---|---|---|

NAVFAC

COMMONWEALTH OF MASSACHUSETTS
CHARLES MARSHALL ROBERTS
CIVIL
No. 50339
REGISTERED PROFESSIONAL ENGINEER
3/12/14
SEAL


CHILDS ENGINEERING CORPORATION
34 WILLIAM WAY BELLINGHAM, MASSACHUSETTS 02019 U.S.A.
Phone: (508) 966-9092
Fax: (508) 966-9096
E-mail: mail@childseng.com
A/E INFO


APPROVED
FOR COMMANDER NAVFAC
ACTIVITY
SATISFACTORY TO DATE
DES CMR DRW TEQ CHK CDS
BRANCH MANAGER
CHIEF ENG/ARCH

DEPARTMENT OF THE NAVY
NAVAL FACILITIES ENGINEERING COMMAND
NAVAL FACILITIES ENGINEERING COMMAND
FISC, AKASAKI TERMINAL
SASEBO, JAPAN
REPAIRS TO FUELING PIER 170
TITLE SHEET

SCALE: AS NOTED
EPROJECT NO.
CONSTR. CONTR. NO.
NAVFAC DRAWING NO. 10006549
SHEET 1 OF 26
GI-001

DRAWFORM REVISION: 10 MARCH 2009

# DRAWING INDEX

| PAGE No. | SHEET No. | NAVFAC DWG. No. | SHEET TITLE |
|---|---|---|---|
| 1 | GI-001 | 10006549 | TITLE SHEET |
| 2 | GI-002 | 10006550 | DRAWING INDEX |
| 3 | GI-003 | 10006551 | GENERAL NOTES |
| 4 | B-001 | 10006552 | SOIL BORING LOCATION PLAN AND LOGS |
| 5 | C-101 | 10006553 | SITE AND DEMOLITION PLAN |
| 6 | S-101 | 10006554 | DECK PLAN |
| 7 | S-102 | 10006555 | DECK PLAN |
| 8 | S-103 | 10006556 | DECK PLAN |
| 9 | S-104 | 10006557 | DECK PLAN |
| 10 | S-105 | 10006558 | DECK PLAN |
| 11 | S-106 | 10006559 | DECK PLAN |
| 12 | S-107 | 10006560 | DISTANCE MARK LOCATION PLAN |
| 13 | S-301 | 10006561 | SECTIONS |
| 14 | S-302 | 10006562 | SECTIONS |
| 15 | S-501 | 10006563 | REPAIR TYPE A-C DETAILS |
| 16 | S-502 | 10006564 | REPAIR TYPE D-G DETAILS |
| 17 | S-503 | 10006565 | REPAIR TYPE H-K DETAILS |
| 18 | S-504 | 10006566 | REPAIR TYPE L-N DETAILS |
| 19 | S-505 | 10006567 | BOLLARD P170-A REPLACEMENT DETAILS |
| 20 | S-506 | 10006568 | BOLLARD P170-M REPLACEMENT DETAILS |
| ~~21~~ | ~~S-507~~ | ~~10006569~~ | ~~BOLLARD P170-GG INSTALLATION DETAILS~~ N.I.C. |
| ~~22~~ | ~~S-508~~ | ~~10006570~~ | ~~BOLLARD P170-GG DETAILS~~ N.I.C. 1 |
| 23 | S-509 | 10006571 | CLEAT AND BOLLARD INSTALLATION DETAILS |
| 24 | S-510 | 10006572 | REPAINT DISTANCE MARK |
| 25 | S-511 | 10006573 | REPAINT BOLLARD I.D. |
| 26 | S-601 | 10006574 | PAINT AND REPAIR SCHEDULE |

## SYMBOLS

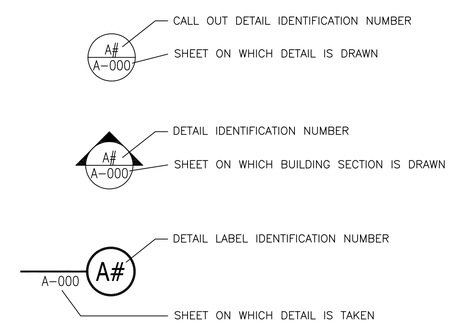


| SYM | DESCRIPTION | DATE | APPR |
|---|---|---|---|
| 1 | REMOVE BOLLARD 170-GG | 11/12/15 | |

NAVFAC

COMMONWEALTH OF MASSACHUSETTS
CHARLES MARSHALL ROBERTS
CIVIL
No. 50339
REGISTERED PROFESSIONAL ENGINEER
3/12/14
SEAL


CHILDS ENGINEERING CORPORATION
34 WILLIAM WAY BELLINGHAM, MASSACHUSETTS 02019 U.S.A.
Phone: (508) 966-9092
Fax: (508) 966-9096
E-mail: mail@childseng.com
A/E INFO


APPROVED
FOR COMMANDER NAVFAC
ACTIVITY
SATISFACTORY TO DATE
DES CMR DRW TEQ CHK CDS
BRANCH MANAGER
CHIEF ENG/ARCH

DEPARTMENT OF THE NAVY
NAVAL FACILITIES ENGINEERING COMMAND
NAVAL FACILITIES ENGINEERING COMMAND
FISC, AKASAKI TERMINAL
SASEBO, JAPAN
REPAIRS TO FUELING PIER 170
DRAWING INDEX

SCALE: AS NOTED
EPROJECT NO.:
CONSTR. CONTR. NO.
NAVFAC DRAWING NO.
10006550
SHEET 2 OF 26
GI-002

DRAWFORM REVISION: 10 MARCH 2009

PROJECT DESCRIPTION

Bid Option Items, see bid schedule

REPAIRS TO PIER 170 SHALL INCLUDE BUT ARE NOT LIMITED TO:

- REMOVING AND REPLACING EXISTING BOLLARDS P170–A, P170–M AND ~~P170–GG~~ WITH NEW BOLLARDS AND FOUNDATIONS / sim at P170-R as (1)
- REMOVING EXISTING BOLLARD P170–AA.
- REPAIRS TO THE PIER STRUCTURE INCLUDE REPAIRING SPALLS AND CRACKS IN THE CONCRETE DECK AND CAISSON.
- REPLACEMENT OF A MISSING BLOCK UNDERWATER BY FILLING WITH CONCRETE.
- CLEANING, RECOATING AND ADDING IDENTIFICATION MARKS TO ALL MOORING HARDWARE.

GENERAL

1. THE FUEL FACILITIES ARE CONSIDERED A HIGHLY FLAMMABLE AREA WITH RESTRICTED ACCESS. USE OF FLAME PRODUCING EQUIPMENT AND HAZARDOUS MATERIALS IS RESTRICTED. THE CONTRACTOR SHALL OBTAIN A HOT WORK PERMIT FROM THE BASE FIRE CHIEF PRIOR TO CONSTRUCTION. NO HOT WORK SHALL BE ALLOWED DURING FUELING OPERATIONS.
2. CONTRACTORS ACTIVITIES SHALL NOT BLOCK FIRE LANES ON ANY OF THE FACILITIES DURING CONSTRUCTION.
3. THE CONTRACTOR SHALL PROVIDE TEMPORARY FENCE OR BARRIER AT SURROUNDINGS OF WORK SITE TO PRECLUDE SAFETY HAZARD AS NECESSARY. CONTRACTOR SHALL PROVIDE FLASHING LIGHTS AROUND TEMPORARY FENCE OF BARRICADE DURING NIGHT.
4. THE CONTRACTOR'S WORKERS SHALL KEEP WITHIN LIMITS OF THE WORK AREA AND SHALL NOT ENTER ANY RESTRICTED AREAS UNLESS REQUIRED TO DO SO AND ARE CLEARED FOR SUCH ENTRY.
5. NO SMOKING IS ALLOWED EXCEPT IN DESIGNATED SMOKING AREAS.
6. OPENING AND CLOSING OF EXISTING GATE FOR ENTRANCE TO WHARF AND CUSTODY OF KEY FOR LOCK OF GATE SHALL BE COORDINATED WITH THE SECURITY DEPARTMENT AND RELATED DEPARTMENT VIA THE CONTRACTING OFFICER.
7. THE CONTRACTOR SHALL PROVIDE FALL PROTECTION FOR WORKERS WORKING BESIDE WHARF. ALSO WORKERS SHALL WEAR LIFE JACKETS. SCAFFOLDING SHALL BE PROVIDED AS NECESSARY. IN THIS CASE, THE SCAFFOLDING PLAN SHALL BE SUBMITTED TO THE CONTRACTING OFFICER FOR APPROVAL PRIOR TO COMMENCEMENT OF WORK.
8. PRIOR TO COMMENCING CONSTRUCTION, THE CONTRACTOR SHALL FAMILIARIZE HIMSELF WITH THE CONDITIONS AT THE SITE AND SUGGESTED CONSTRUCTION SEQUENCES SHOWN ON THE DRAWINGS. IT SHALL BE THE CONTRACTOR'S RESPONSIBILITY TO PROVIDE ALL NECESSARY SAFE GUARDS TO MAINTAIN ALL PARTS OF THE EXISTING PIER STRUCTURE IN SAFE CONDITION AT ALL TIMES DURING THE PROCESS OF CONSTRUCTION AND TO PROTECT THE STRUCTURE FROM DAMAGE.
9. THE CONTRACTOR SHALL VERIFY AT THE JOB SITE ALL DIMENSIONS AND CONDITIONS PERTAINING TO THE WORK. SHOULD ACTUAL FIELD CONDITIONS VARY FROM THOSE SHOWN, THE CONTRACTOR SHALL NOTIFY THE CONTRACTING OFFICER PRIOR TO PROCEEDING WITH THE WORK.
10. THE FACILITIES ARE EXPOSED TO SEVERE WEATHER CONDITIONS THAT WILL EFFECT THE WORK. CONTRACTOR SHALL TAKE ADEQUATE PRECAUTIONS TO PROTECT THE WORK AND SHALL BE RESPONSIBLE FOR ANY LOSS OF TIME AND EQUIPMENT OR DAMAGE TO THE WORK AS A RESULT OF THE WEATHER.
11. UTILITIES ARE SHOWN ON THE PLAN FOR REFERENCE PURPOSES ONLY. THE CONTRACTOR SHALL PROCEED WITH CAUTION DURING ALL EXCAVATION AND CONSTRUCTION ACTIVITIES. THE CONTRACTOR SHALL BE RESPONSIBLE FOR ANY DAMAGED UTILITIES. THE CONTRACTOR SHALL COORDINATE ALL EXCAVATION PERMISSIONS WITH THE CONTRACTING OFFICER AND PUBLIC WORKS DEPARTMENT.
12. IF THE CONTRACTOR ENCOUNTERS UTILITIES THAT AFFECT THE WORK THAT ARE NOT SHOWN ON THE PLANS THE CONTRACTOR SHALL NOTIFY THE CONTRACTING OFFICER PRIOR TO CONTINUING WITH THE WORK.
13. THE CONTRACTOR SHALL MAKE SURE ALL MEASURES LAID OUT IN THEIR APPROVED SPILL PREVENTION, CONTROL, AND RESPONSE (SPCR) PLAN ARE IN PLACE PRIOR TO THE START OF ANY CONSTRUCTION.
14. IF THE CONTRACTOR MUST DISTURB THE EXISTING SECURITY FENCE FOR REPAIRS, A TEMPORARY SECURITY FENCE SHALL BE ERECTED DURING THE REPAIR PROCESS AND SHALL REMAIN SECURE AT ALL TIMES. THE PERMANENT SECURITY FENCE SHALL BE REPLACED IN KIND AT THE CONCLUSION OF THE REPAIR PROCESS.
15. INFORMATION REGARDING EXISTING CONSTRUCTION AND CONDITIONS IS BASED ON FIELD INSPECTION AND IS INCLUDED TO ASSIST THE CONTRACTOR. THE CONTRACTING OFFICER ASSUMES NO RESPONSIBILITY FOR ITS ACCURACY OR COMPLETENESS.
16. THE CONTRACTOR SHALL NOTIFY THE CONTRACTING OFFICER WHEN UNANTICIPATED OR APPARENTLY DANGEROUS CONDITIONS ARE UNCOVERED DURING CONSTRUCTION OR DEMOLITION.
17. DETAILS NOT SPECIFICALLY SHOWN SHALL BE SIMILAR TO THOSE FOR MOST NEARLY SIMILAR CONDITION AS DETERMINED BY THE CONTRACTING OFFICER.
18. THE CONTRACTOR SHALL SHORE, BRACE, SHEETPILE OR OTHERWISE SUPPORT THE STRUCTURE AND EXCAVATIONS AS REQUIRED TO MAINTAIN STRUCTURAL INTEGRITY AT ALL TIMES.

DEMOLITION

1. CONTRACTOR SHALL REMOVE AND DISPOSE OF ALL WASTE MATERIALS AND DEMOLISHED MATERIALS NOT BEING REUSED OFF SITE AT AN APPROVED FACILITY.
2. CONTRACTOR SHALL NOT ALLOW ANY WASTE MATERIALS TO ENTER THE WATER. CONTRACTOR SHALL TAKE MEASURES TO COLLECT ALL DEMOLISHED WASTE.
3. CONTRACTOR SHALL INSTALL A DEBRIS BOOM AROUND ALL WORK AREAS OVER THE WATER. ALL DEBRIS COLLECTED IN THE BOOM SHALL BE REMOVED DAILY.
4. CONTRACTOR SHALL NOT UTILIZE GOVERNMENT FUEL BOOM FOR DEBRIS CONTAINMENT.
5. CONTRACTOR SHALL COLLECT AND REMOVE ALL DEMOLITION DEBRIS AND WASTE MATERIALS THAT ENTER THE WATER AND LAY ON THE BOTTOM.

FOUNDATIONS

1. FOUNDATIONS HAVE BEEN DESIGNED BASED UPON A PRESUMPTIVE BEARING CAPACITY OF 130 KPA. THE CONTRACTOR SHALL NOTIFY THE CONTRACTING OFFICER IMMEDIATELY IN UNSUITABLE BEARING MATERIALS EXIST.
2. THE CONTRACTING OFFICER ASSUMES NO RESPONSIBILITY FOR THE VALIDITY OF SUBSURFACE CONDITIONS WHERE DESCRIBED ON DRAWINGS, SPECIFICATIONS, TEST BORINGS, OR TEST PITS. THESE DATA ARE INCLUDED ONLY TO ASSIST THE CONTRACTOR DURING CONSTRUCTION, AND REPRESENT CONDITIONS ONLY AT THESE SPECIFIC LOCATIONS AT THE PARTICULAR TIME THEY WERE MADE.
3. UNSUITABLE BEARING MATERIALS, SUCH AS MISCELLANEOUS FILL AND ORGANIC SOILS MAY EXIST IN AREAS OF NEW FOUNDATIONS. EXISTING UNSUITABLE MATERIALS SHALL BE EXCAVATED AS DIRECTED OR AS INDICATED ON THE DRAWINGS AND SHALL BE FOLLOWED BY PLACEMENT OF COMPACTED GRAVEL FILL AS SPECIFIED.
4. WHERE ROCK IS ENCOUNTERED, IT SHALL BE EXCAVATED TO 300MM BELOW BOTTOMS OF FOOTINGS AND SLABS AND REPLACED WITH A 300MM LAYER OF COMPACTED CRUSHED STONE.
5. NO FOUNDATION CONCRETE SHALL BE PLACED IN WATER OR ON FROZEN SOIL.
6. BACKFILL UNDER ANY PORTION OF THE STRUCTURE SHALL BE COMPACTED IN 200MM LIFTS.
7. COMPACT SOIL TO 98% OF MAX. DRY DENSITY UNDER FOUNDATIONS.
8. CONTRACTOR SHALL MAINTAIN CONTINUOUS CONTROL OF SURFACE AND SUBSURFACE WATER DURING CONSTRUCTION SO THAT WORK IS DONE UNDER DRY CONDITIONS ON UNDISTURBED SUBGRADE MATERIAL OR COMPACTED FILL, AS APPLICABLE.

CONCRETE

1. CONCRETE WORK SHALL CONFORM TO LATEST EDITIONS OF JAPAN SOCIETY OF CIVIL ENGINEERING (JSCE) STANDARD SPECIFICATION FOR CONCRETE.
2. CONCRETE SHALL BE PROPORTIONED, MIXED, AND PLACED UNDER THE SUPERVISION OF THE APPROVED TESTING AGENCY.
3. MASS CONCRETE FOR BOLLARD FOUNDATIONS SHALL BE DESIGNED AND PROPORTIONED TO CURE AT A LOW HEAT OF HYDRATION TO PREVENT THERMAL STRESS AND CRACKING.
4. CONCRETE SHALL HAVE A MINIMUM 42–DAY COMPRESSIVE STRENGTH OF 30 MPA.
5. ALL CONCRETE SHALL BE AIR–ENTRAINED.
6. CONCRETE SHALL BE CURED FOR A MINIMUM OF SEVEN DAYS.
7. LOADS SHALL BE APPLIED TO THE BOLLARDS NO SOONER THAN 28 DAYS AFTER FINAL PLACING OF CONCRETE.
8. PROVIDE A BROOM FINISH FOR EXTERIOR FLAT SURFACES.
9. PORTLAND CEMENT TYPE II SHALL BE USED FOR ALL CONCRETE AND MAXIMUM W/C (WATER CEMENT RATIO) SHALL BE 0.40.
10. AT ALL CONSTRUCTION JOINTS EPOXY NEW CONCRETE TO HARDENED CONCRETE WITH BONDING AGENT. APPLY PER MANUFACTURER'S RECOMMENDATIONS.
11. ELASTOMERIC SEALANT SHALL BE A ONE PART POLYURETHANE SEALANT/ADHESIVE. APPLY PER MANUFACTURER'S RECOMMENDATIONS.
12. ALL EXPOSED CONCRETE EDGES SHALL HAVE A 75MM CHAMFER (TYPE.)
13. ALL CONCRETE SHALL BE PLACED IN THE DRY.

REINFORCING STEEL

1. REINFORCING STEEL SHALL BE GRADE 60 NEW BILLET STEEL, CONFORMING TO ASTM A615. WELDED WIRE FABRIC SHALL BE ASTM A185.
2. DETAILING, FABRICATION, AND ERECTION OF REINFORCEMENT SHALL CONFORM TO LATEST EDITIONS OF JAPAN SOCIETY OF CIVIL ENGINEERING (JSCE) STANDARD SPECIFICATION FOR CONCRETE.
3. MINIMUM LAP OF REINFORCING BARS SHALL BE 40 DIAMETERS, UNLESS SHOWN OTHERWISE.
4. MINIMUM LAP OF WELDED WIRE FABRIC SHALL BE 150 MM OR ONE WIRE SPACE, WHICHEVER IS LARGER.
5. MINIMUM COVER OF CONCRETE SHALL BE 75 MM.
6. INSTALLATION OF REINFORCEMENT SHALL BE COMPLETED AT LEAST 24 HOURS PRIOR TO SCHEDULED CONCRETE PLACEMENT, UNLESS OTHERWISE APPROVED BY CONTRACTING OFFICER.
7. PROVIDE AND SCHEDULE ON SHOP DRAWINGS THE NECESSARY ACCESSORIES TO HOLD REINFORCEMENT SECURELY IN POSITION.
8. WHERE REINFORCEMENT IS REQUIRED IN SECTION, REINFORCEMENT IS CONSIDERED TYPICAL WHEREVER THE SECTION APPLIES.

STEEL

1. ALL STEEL COMPONENTS AND FITTINGS EXPOSED TO WEATHER IN THEIR FINAL STATE SHALL BE HOT DIPPED GALVANIZED.
2. ANCHOR BOLTS AND BEARING PLATES SHALL BE LOCATED BY TEMPLATES OR SIMILAR METHOD. PLATES SHALL BE SET IN FULL BEDS OF NON–SHRINK GROUT, BOTTOM OF BASE PLATES SHALL BE SET APPROXIMATELY 3/4" ABOVE TOP OF BEARING. RESULTING SPACE SHALL BE FILLED WITH FLOWABLE NON–SHRINK GROUT.
3. WELDING SHALL BE INSPECTED IN THE FIELD BY QUALIFIED WELDING INSPECTORS UNDER THE SUPERVISION OF AN APPROVED TESTING AGENCY.
4. ALL EXPOSED STRUCTURAL STEEL SHALL BE HOT DIPPED GALVANIZED (.622 KG/M2) AFTER FABRICATION IN COMPLIANCE WITH ASTM–123, A156, OR A386, AS APPLICABLE. GALVANIZER SHALL FURNISH TO CONTRACTING OFFICER A NOTARIZED CERTIFICATE OF COMPLIANCE WITH THESE SPECIFICATIONS.

MOORING HARDWARE Inclusive of but not limited to Bid Option Items 1, 2, & 3 as defined on sheet S-601

1. PROVIDE AND INSTALL CAST STEEL BOLLARDS AS SHOWN ON THE PLANS.
2. BOLLARDS SHALL BE NAVY TYPE SPECIAL MOORING BOLLARD "B" WITH A MINIMUM HORIZONTAL LINE PULL CAPACITY OF 200,000 LBS. (100 TONS) OR EQUAL BOLLARD TYPE ACCEPTABLE TO THE CONTRACTING OFFICER.
3. BOLLARDS SHALL BE SECURED TO THE FOUNDATION AS SHOWN. BOLTS AND HARDWARE SHALL BE AS RECOMMENDED BY THE BOLLARD MANUFACTURER TO RESIST THE DESIGN LOADS.
4. BOLLARDS SHALL BE COATED WITH A 3 PART COATING SYSTEM AS DESCRIBED IN SPECIFICATION SECTION 05 30 00.
5. BOLLARDS SHALL BE SET IN NON–SHRINK GROUT SUCH THAT THERE IS 100% BEARING ON THE FOUNDATION AND NO VOIDS UNDER THE BOLLARD BASE.

REVISION NOTE: (A)

DRAWINGS REVISED TO INCLUDE THE REPLACEMENT OF BOLLARD P170–R

(1)

DATUMS:

| | |
|---|---|
| M.H.W. | – MEAN HIGH WATER |
| T.P. | – TOKYO PEIL |
| M.L.W. | – MEAN LOW WATER |
| C.D.L. | – CONSTRUCTION DATUM LINE |

| | |
|---|---|
| M.H.W. +3.30m | M.H.W. +10.83FT |
| T.P. +1.685m | T.P. +5.528FT |
| M.L.W. 0.00m | M.L.W. 0.00FT |
| C.D.L. 0.00m | C.D.L. 0.00FT |

TIDAL DATUM (N.T.S.)

ABBREVIATIONS

| | |
|---|---|
| SE | SOUTHEAST |
| NW | NORTHWEST |
| TYP | TYPICAL |
| HHW | HIGHER HIGH WATER |
| MHW | MEAN HIGH WATER |
| MLW | MEAN LOW WATER |
| LLW | LOWER LOW WATER |
| EL. | ELEVATION |
| ø | DIAMETER |
| (UT) | INDICATES ASSET TYPE |

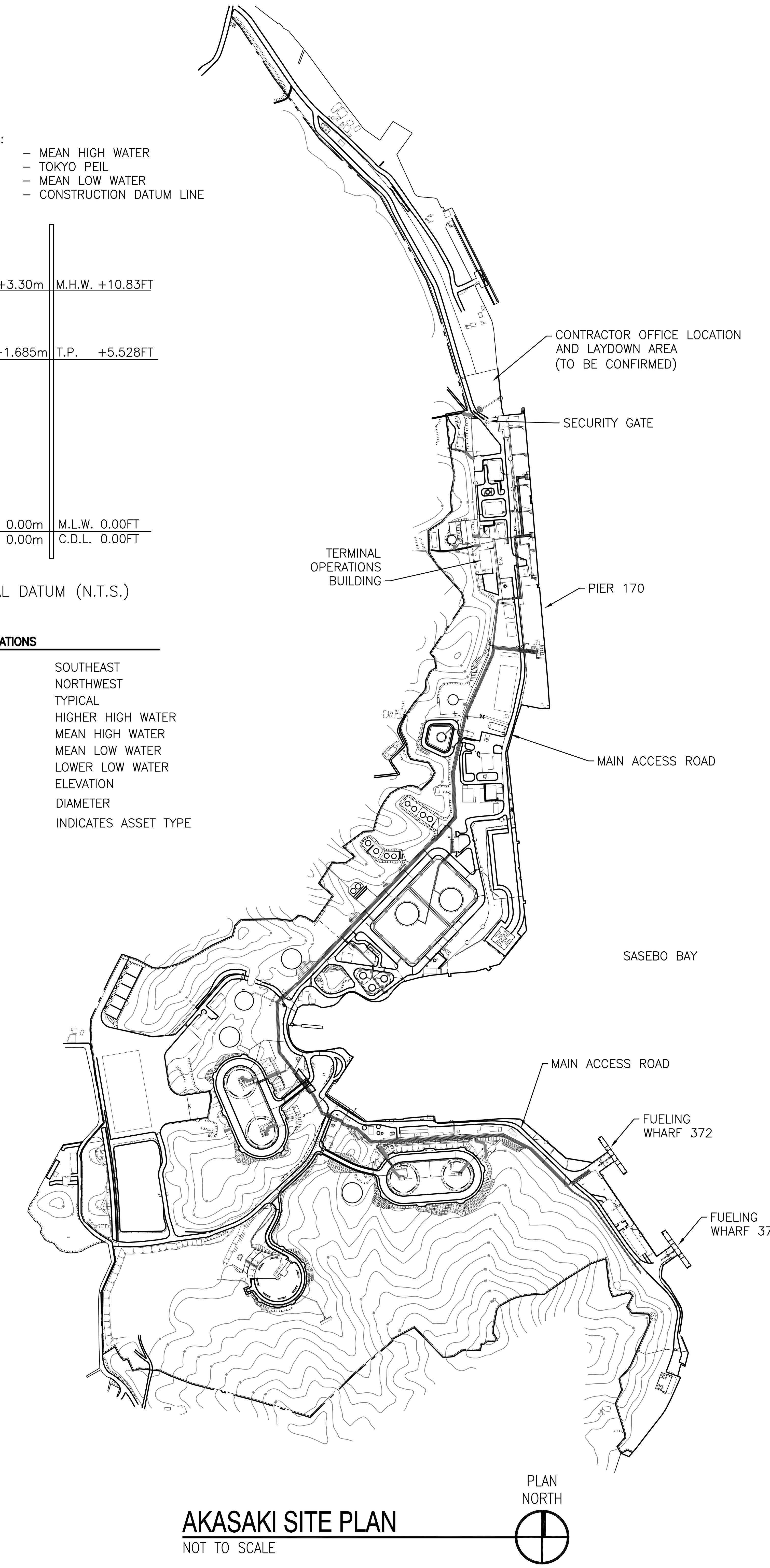


AKASAKI SITE PLAN
NOT TO SCALE

| SYM | DESCRIPTION | DATE | APPR |
|---|---|---|---|
| 1 | REMOVE BOLLARD 170-GG | 11/12/15 | |
| A | REPLACE BOLLARD P170–R | 01/20/14 | CMR |

NAVFAC

COMMONWEALTH OF MASSACHUSETTS CHARLES MARSHALL ROBERTS CIVIL No. 50339 REGISTERED PROFESSIONAL ENGINEER
3/12/14
SEAL


CHILDS ENGINEERING CORPORATION
34 WILLIAM WAY BELLINGHAM, MASSACHUSETTS 02019 U.S.A.
Phone: (508) 966–9092
Fax: (508) 966–9096
E–mail: mail@childseng.com
A/E INFO


APPROVED

FOR COMMANDER NAVFAC

ACTIVITY

SATISFACTORY TO DATE

DES CMR | DRW TEQ | CHK CDS

BRANCH MANAGER

CHIEF ENG/ARCH

DEPARTMENT OF THE NAVY NAVAL FACILITIES ENGINEERING COMMAND
NAVAL FACILITIES ENGINEERING COMMAND

FISC, AKASAKI TERMINAL SASEBO, JAPAN

REPAIRS TO FUELING PIER 170

GENERAL NOTES

SCALE: AS NOTED
EPROJECT NO.:
CONSTR. CONTR. NO.
NAVFAC DRAWING NO. 10006551
SHEET 3 OF 26

GI-003

DRAWFORM REVISION: 10 MARCH 2009

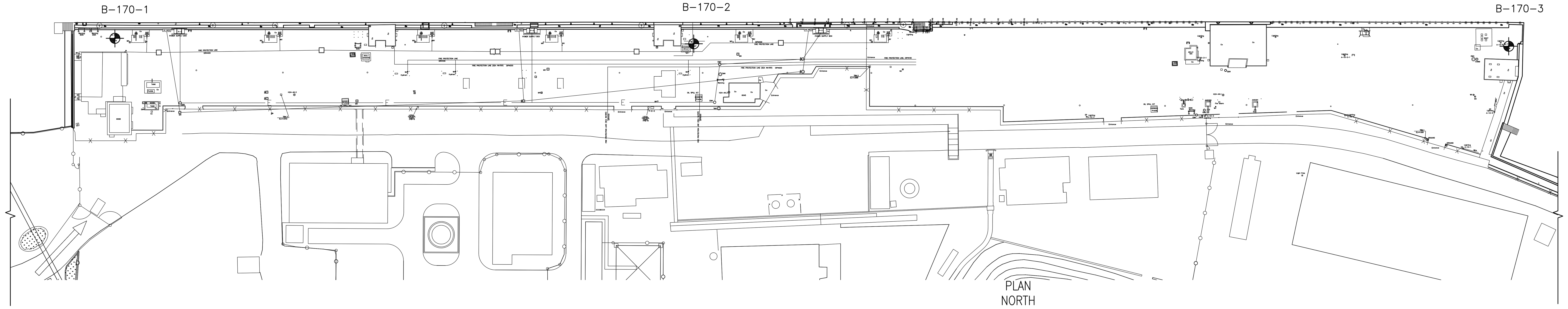


# PIER 170 SOIL BORING LOCATION PLAN

SCALE: 1:1000

0 20 50 100 M

GRAPHIC SCALE: 1:1000

## B-170-1 BORING LOG

| DRILLING LOG | DIVISION | INSTALLATION CFAS Sasebo, Akasaki Fuel Terminal | SHEET 1 OF 4 SHEETS |
|---|---|---|---|
| 1. PROJECT: Water Front Facilities Testing Program, Akasaki Fuel Terminal | | 10. SIZE AND TYPE OF BIT: 66mm Dia. Single Core Tube Bit & Split Spoon sampler | |
| | | 11. DATUM FOR ELEVATION SHOWN (TBM or MSL): (TBM H24-AK.3) | |
| 2. LOCATION (Coordinates or Station): As shown on plan layout | | 12. MANUFACTURER'S DESIGNATION OF DRILL: YBM-05 | |
| 3. DRILLING AGENCY: Saikai Chiken (TEL) 0956-22-2128 | | 13. TOTAL NO. OF OVERBURDN SAMPLES TAKEN: DISTURBED None; UNDISTURBED None | |
| 4. HOLE ID NO. (As shown on drawing title and file number): B-170-1 | | 14. TOTAL NUMBER CORE BOXES: 3 boxes | |
| 5. NAME OF DRILLER: IKEDA, Masashi | | 15. ELEVATION GROUND WATER: 1.19 m MSL (3.60 m bgs) | |
| 6. DIRECTION OF HOLE: ☑ VERTICAL ☐ INCLINED ___ DEG. FROM VERT. | | 16. DATE HOLE: STARTED 20 Jan 2012; COMPLETED 23 Jan 2012 | |
| 7. THICKNESS OF OVERBURDEN | | 17. ELEVATION TOP OF HOLE: EL = 4.79 m MSL | |
| 8. DEPTH DRILLED INTO ROCK: 0.00 m | | 18. TOTAL CORE RECOVERY FOR BORING | |
| 9. TOTAL DEPTH OF HOLE: 12.00 m | | 19. SIGNATURE OF INSPECTOR: OIWA, Yoshitomo | |

| EL (m) | DEPTH (m) | CLASSIFICATION OF MATERIALS (Description) |
|---|---|---|
| 4.79 | 0.00 | |
| 3.94 | 0.85 | **Filled Material / Sandy Gravel (GP) w/ Clay** Gray to Grayish Brown / Medium Moisture Content. Asphalt to 5 cm depth bgs. The lower part of this layer contains crushed stone to approx 20 cm bgs. Principally filled with Ø 10 to 30 mm basalt gravels. |
| 2.89 | 1.90 | **Concrete** / Dark Gray / Medium Moisture Content. Concrete made of a large amount of aggregate with Ø 100 to 150 mm basalt cobble stone. Filled with basalt gravel from 1.7 m depth bgs and deeper. |
| -4.06 | 8.85 | **Filled Material / Silty Gravel (GM)** Grayish Brown / Medium Moisture Content / Relative Density: Very Loose to Medium Dense. Sandy soil with a large amount of sandy gravel with Ø 50 mm or smaller. Gravel is medium hard (can be broken with a medium hit with hammer). Matrix state is sandy soil principally containing weathered sandstone and partially containing weathered mudstone. |
| -7.21 | 12.00 | **Concrete** Dark Gray / Medium Moisture Content. Wharf structure concrete block that principally contains Ø 5 to 50 mm basalt gravels. It is a hard concrete and contains Ø 10 to 20 cm size sandstone gravels between 9 m to 10 m depth bgs. Sampled semicircular core to gravel core due to the appearance of joints and vertical cracks. |

STANDARD PENETRATION TEST

| Total Blow Count Of S.P.T | Depth & Blow count /10 cm |
|---|---|
| 11 | 2.15 / 4, 3, 4 / 2.45 |
| 4 | 3.15 / 1, 2, 1 / 3.45 |
| 10 | 4.15 / 4, 3, 3 / 4.45 |
| 10 | 5.15 / 2, 5, 3 / 5.45 |
| 18 | 6.15 / 4, 10, 4 / 6.45 |
| 25 | 7.15 / 5, 15, 5 / 7.45 |
| 20 | 8.15 / 10, 6, 4 / 8.45 |

(1/23) WL=GL-3.60 (1.19 m MSL)

Soil Sample: 5.15 to 5.45m bgs

ENG FORM 1836 — PREVIOUS EDITIONS MAY BE USED — PROJECT: Water Front Facilities Testing Program, Akasaki Fuel Terminal — HOLE No. B-170-1

## B-170-2 BORING LOG

| DRILLING LOG | DIVISION | INSTALLATION CFAS Sasebo, Akasaki Fuel Terminal | SHEET 2 OF 4 SHEETS |
|---|---|---|---|
| 1. PROJECT: Water Front Facilities Testing Program, Akasaki Fuel Terminal | | 10. SIZE AND TYPE OF BIT: 66mm Dia. Single Core Tube Bit & Split Spoon sampler | |
| | | 11. DATUM FOR ELEVATION SHOWN (TBM or MSL): (TBM H24-AK.2) | |
| 2. LOCATION (Coordinates or Station): As shown on plan layout | | 12. MANUFACTURER'S DESIGNATION OF DRILL: YBM-05 | |
| 3. DRILLING AGENCY: Saikai Chiken (TEL) 0956-22-2128 | | 13. TOTAL NO. OF OVERBURDN SAMPLES TAKEN: DISTURBED None; UNDISTURBED None | |
| 4. HOLE ID NO. (As shown on drawing title and file number): B-170-2 | | 14. TOTAL NUMBER CORE BOXES: 5 boxes | |
| 5. NAME OF DRILLER: IKEDA, Masashi | | 15. ELEVATION GROUND WATER: 1.22 ~ 1.82 MSL (3.00 ~ 3.60 m bgs) | |
| 6. DIRECTION OF HOLE: ☑ VERTICAL ☐ INCLINED ___ DEG. FROM VERT. | | 16. DATE HOLE: STARTED 23 Jan 2012; COMPLETED 28 Jan 2012 | |
| 7. THICKNESS OF OVERBURDEN | | 17. ELEVATION TOP OF HOLE: EL = 4.87 m MSL | |
| 8. DEPTH DRILLED INTO ROCK: 8.15 ? m | | 18. TOTAL CORE RECOVERY FOR BORING | |
| 9. TOTAL DEPTH OF HOLE: 22.00 m | | 19. SIGNATURE OF INSPECTOR: OIWA, Yoshitomo | |

| EL (m) | DEPTH (m) | CLASSIFICATION OF MATERIALS (Description) |
|---|---|---|
| 4.87 / 4.82 | 0.00 / 0.05 | |
| 4.47 | 0.40 | **Asphalt** / Blackish Gray / Pavement |
| 3.37 | 1.50 | **Filled Material / Gravel Sand (GP)** / Gray / Crushed Stone |
| 2.87 | 2.00 | **Filled Material / Silty Sand (SM) w/ Gravel** Brown to Grayish Brown / Medium Moisture Content / Weak Compaction / Relative Density: Loose. Contains Ø 2 cm or smaller sub-angular to sub-rounded basalt stone and sandstone. Matrix is sandy soil principally containing weathered sandstone and mudstone. |
| 2.27 | 2.60 | **Boulder Sandstone (SP)** Gray to Pale Yellowish Brown / Medium Moisture. Boulder stone of sandstone and shale which is sampled as a core shaped rock fragment. Slightly hard (can be broken with a medium hit with hammer). |
| 1.37 | 3.50 | **Filled Material / Silt (MH) with Gravel** Brown / Medium Moisture / Relative Density: Very Loose. Fine soil containing soft coal fragments. |
| 0.07 | 4.80 | **Filled Material / Silty Sand (SM)** Light Brown / Medium Moisture / Weak Compaction / Relative Density: Loose. Sandy soil of fine particles principally consisting of weathered medium size sandstone. |
| | | **Filled Material / Sandy Silt (SM) w/ Gravel** Brown / Medium Moisture / Consistency: Soft. Contains Ø 3 cm or smaller size sub-rounded weathered sandstone. Matrix is fine soil with a large sand fraction. |
| -3.03 | 7.90 | **Filled Material / Silty Sand (SM) w/ Gravel** Pale Yellowish Brown / Medium Moisture / Relative Density: Medium Dense. Contains Ø 5 cm or smaller sized sub-rounded sandstone. Sandstone is slightly hard (can be be broken by a medium hit with hammer). Matrix is sandstone which contains small amounts of coal fragments and sandy soil which principally contains weathered mudstone. |
| -3.63 | 8.50 | **Fill Material / Clay (CL) w/ Sand** / Light Brownish Gray to Gray / Medium Moisture / Relative Density: Stiff / Fine soil which principally contains weathered mudstone. |
| -4.13 | 9.00 | **Boulder Sandstone (SP)** / Yellowish Brownish to Gray / Medium Moisture. Boulder sandstone which is slightly hard (can be broken by a medium hit with a hammer). |
| -5.13 | 10.00 | **Filled Material / Gravelly Clay (CL)** Pale Brownish Gray to Bluish Gray / Medium Moisture / Relative Density: Medium Stiff. Contains weathered soil of Ø 5 cm or smaller sized sub-rounded sandstone and mudstone. |
| -8.83 | 13.70 | **Filled Material / Silty Sand (SM) w/ Gravel** Grayish Brown to Light Brown / Medium Moisture / Relative Density: Loose to Medium. Contains Ø 5 cm or smaller sized sub-rounded sandstone. Gravel is slightly hard (can be broken by a medium hit with hammer). Matrix consists of sandy soil which principally contains weathered sandstone soil and partially contains weathered mudstone. |
| -8.98 | 13.85 | |
| -9.48 | 14.35 | **Silty Sand (SM)** Dark Gray / Medium Moisture / Weak Compaction / Old sub-marine sediments. |
| | | **Heavily Weathered Sandstone** Pale Yellowish Gray / Relative Density: Very Dense. Has developed into sand and stone due to weathering. |
| -15.33 | 20.20 | **Weathered Gravelly Sandstone (SP)** Yellowish Brown to Pale Grayish Brown / Medium Moisture / Relative Density: Very Dense. Principally contains consolidated gravel and coarse-grained sandstone due to weathering. N value is more than 50 although it shows an entirely oxidized coloration. |
| -17.13 | 22.00 | **Alternation of Conspicuous Sandstone and Shale** Yellowish Brown to Gray / Medium Moisture / Relative Density: Very Dense. Relatively few cracks and sampled as short to long cores. Stone fragments are slightly hard (can be broken by a medium hit with hammer). Soft along crack surfaces to a depth of approx 21.1 m bgs but this tendency is minimized beyond 21.1 m in depth. RQD (21.0~22.0m bgs): 76% |

STANDARD PENETRATION TEST

| Total Blow Count Of S.P.T | Depth & Blow count /10 cm |
|---|---|
| 6 | 1.15 / 2, 2, 2 / 1.45 |
| 3 | 2.15 / 1, 1, 1 / 2.45 |
| 9 | 3.15 / 3, 3, 3 / 3.45 |
| 4 | 4.15 / 1/9, 1/8, 2/13 / 4.45 |
| 15 | 5.15 / 6, 5, 4 / 5.45 |
| 17 | 6.15 / 3, 3, 11 / 6.45 |
| 12 | 7.15 / 4, 5, 3 / 7.45 |
| 10 | 8.15 / 4, 3, 3 / 8.45 |
| 6 | 9.15 / 1, 2, 3 / 9.45 |
| 7 | 10.15 / 2, 3, 2 / 10.45 |
| 12 | 11.15 / 2, 6, 4 / 11.45 |
| 12 | 12.15 / 4, 4, 4 / 12.45 |
| 17 | 13.15 / 7, 6, 4 / 13.45 |
| 50/27cm | 14.15 / 4, 7, 39/7 / 14.42 |
| 50/23cm | 15.15 / 20, 21, 9/3 / 15.38 |
| 50/20cm | 16.05 / 10, 20 / 16.25 |
| 50/15cm | 17.05 / 20, 30/5 / 17.20 |
| 50/10cm | 18.05 / 50 / 18.15 |
| 50/10cm | 19.00 / 50 / 19.10 |
| 50/11cm | 20.00 / 50/11 / 20.11 |

(1/26) WL=GL-3.00 (1.82 m MSL)

Soil Sample: 4.00 to 4.50m bgs; Soil Sample: 5.00 to 5.50m bgs; Soil Sample: 9.00 to 9.50m bgs; Soil Sample: 10.00 to 10.50m bgs; Soil Sample: 13.00 to 13.50m bgs; Rock Core: 21.38 to 21.83m bgs

ENG FORM 1836 — PREVIOUS EDITIONS MAY BE USED — PROJECT: Water Front Facilities Testing Program, Akasaki Fuel Terminal — HOLE No. B-170-2

## B-170-3 BORING LOG

| DRILLING LOG | DIVISION | INSTALLATION CFAS Sasebo, Akasaki Fuel Terminal | SHEET 3 OF 4 SHEETS |
|---|---|---|---|
| 1. PROJECT: Water Front Facilities Testing Program, Akasaki Fuel Terminal | | 10. SIZE AND TYPE OF BIT: 66mm Dia. Single Core Tube Bit & Split Spoon sampler | |
| | | 11. DATUM FOR ELEVATION SHOWN (TBM or MSL): (TBM H24-AK.1) | |
| 2. LOCATION (Coordinates or Station): As shown on plan layout | | 12. MANUFACTURER'S DESIGNATION OF DRILL: YBM-05 | |
| 3. DRILLING AGENCY: Saikai Chiken (TEL) 0956-22-2128 | | 13. TOTAL NO. OF OVERBURDN SAMPLES TAKEN: DISTURBED None; UNDISTURBED None | |
| 4. HOLE ID NO. (As shown on drawing title and file number): B-170-3 | | 14. TOTAL NUMBER CORE BOXES: 4 boxes | |
| 5. NAME OF DRILLER: IKEDA, Masashi | | 15. ELEVATION GROUND WATER: 1.08 m MSL (3.40 m bgs) | |
| 6. DIRECTION OF HOLE: ☑ VERTICAL ☐ INCLINED ___ DEG. FROM VERT. | | 16. DATE HOLE: STARTED 13 Jan 2012; COMPLETED 17 Jan 2012 | |
| 7. THICKNESS OF OVERBURDEN | | 17. ELEVATION TOP OF HOLE: EL = 4.48 m MSL | |
| 8. DEPTH DRILLED INTO ROCK: 1.00 m | | 18. TOTAL CORE RECOVERY FOR BORING | |
| 9. TOTAL DEPTH OF HOLE: 19.00 m | | 19. SIGNATURE OF INSPECTOR: OIWA, Yoshitomo | |

| EL (m) | DEPTH (m) | CLASSIFICATION OF MATERIALS (Description) |
|---|---|---|
| 4.48 | 0.00 | |
| 2.38 | 2.10 | **Filled Material / Sandy Gravel (GP) w/ Clay** Gray to Grayish Brown / Medium Moisture Content / Relative Density: Very Dense. The top 5 cm of the surface layer consists of asphalt pavement. The lower portion of the surface layer contains gravels to a depth of approx. 0.5 m bgs. This layer principally consists of Ø10 to 60 mm sized basalt conglomerates. Concrete mass was observed between 1.05 m to 1.40 m bgs and 1.8 m to 2.0 m bgs. |
| 0.78 | 3.70 | **Filled Material / Sandy Gravel (GP) w/ Clay** Grayish Brown / Medium Moisture Content / Relative Density: Loose. Consists of a large amount of Ø10 to 60 mm sandstone and a sub-angular breccia of basalt. Matrix is sandy soil principally filled with weathered sandstone. |
| -3.22 | 7.70 | **Filled Material / Silty Sand (SM) w/ Gravel** Grayish Brown / Medium Moisture Content / Relative Density: Very Loose to Loose. Contains Ø 5 to 60 mm sandstone and mudstone gravels. Gravel is slightly hard (can be broken by a medium hit with hammer). Matrix consists of sandy soils principally filled with sandstone and weathered mudstone soils. |
| -9.32 | 13.80 | **Filled Material / Sand (SP) w/ Silt and Gravel** Yellowish Brown / Medium Moisture Content / Relative Density: Loose to Medium. Contains Ø 10 to 60 mm sub-rounded gravels of sandstone. Gravel is slightly hard (can be broken by a medium hit with hammer). Primary contains weathered mudstone soils. |
| -10.72 | 15.20 | **Alluvium / Silty Gravel (GM) w/ Sand** Dark Grayish Brown / Medium Moisture Content / Relative Density: Dense. Principally filled with Ø 10 to 100 mm basalt gravels. Matrix consists primarily of a weak silt with sand. Slightly high plasticity. |
| -12.92 | 17.40 | **Alluvium / Sandy Silt (ML) w/ Gravel** Gray / Medium Moisture Content / Consistency: Hard to Soft to Medium Stiff. Contains Ø 10 to 60 mm sub-angular breccias of basalt. Matrix is sandy silt with a small amount of carbide. Plasticity of soil increases with depth. |
| -13.52 | 18.00 | **Alluvium / Sandy Gravel (GP)** Yellowish Brown / Medium Moisture Content. Sediments of weathered sandstone. Contains a large amount of weathered conglomerate. |
| -14.52 | 19.00 | **New Tertiary Deposit / Alternation of Sandstone & Shale** Gray to Grayish Yellow / Medium Moisture Content / Relative Density: Very Dense. Alternation of conspicuous sandstone and sandstone shale. Sampled short to long column cores. Slightly hard (can be broken by a medium hit with hammer). Turns to brown color along cracks. Thin clayey layer exists between crack surfaces. RQD (18.0~19.0m bgs): 52% |

STANDARD PENETRATION TEST

| Total Blow Count Of S.P.T | Depth & Blow count /10 cm |
|---|---|
| 50/5cm | 1.00 / 1.05 |
| 6 | 2.30 / 1, 1, 4 / 2.60 |
| 7 | 3.15 / 2, 2, 3 / 3.45 |
| 3 | 4.15 / 2/7, 1/11, 1/17 / 4.50 |
| 3 | 5.15 / 1, 1, 1 / 5.45 |
| 4 | 6.15 / 1, 2, 1 / 6.45 |
| 4 | 7.15 / 1/8, 1, 2/13 / 7.48 |
| 5 | 8.15 / 2, 2, 2/13 / 8.48 |
| 23 | 9.15 / 5, 10, 8 / 9.45 |
| 9 | 10.15 / 2, 3, 4 / 10.45 |
| 8 | 11.15 / 2, 3, 3 / 11.45 |
| 7 | 12.15 / 2, 2, 3 / 12.45 |
| 4 | 13.15 / 1, 2/13, 1/6 / 13.48 |
| 31 | 14.15 / 9, 19, 3 / 14.45 |
| 63 | 15.15 / 10, 32, 3/4 / 15.39 |
| 2 | 16.15 / 1/15, 1/15 / 16.45 |
| 7 | 17.15 / 2, 2, 3 / 17.45 |
| 50/5cm | 18.05 / 18.10 |
| 50/4cm | 19.00 / 19.04 |

(1/23) WL=GL-3.40 (1.08 m MSL)

Soil Sample: 2.15 to 2.60m bgs; Soil Sample: 5.00 to 5.50m bgs; Soil Sample: 11.00 to 11.50m bgs; Soil Sample: 14.00 to 14.60m bgs; Soil Sample: 16.00 to 16.50m bgs; Soil Sample: 17.50 to 18.00m bgs

ENG FORM 1836 — PREVIOUS EDITIONS MAY BE USED — PROJECT: Water Front Facilities Testing Program, Akasaki Fuel Terminal — HOLE No. B-170-3

| SYM | DESCRIPTION | DATE | APPR |
|---|---|---|---|
| | | | |

NAVFAC

COMMONWEALTH OF MASSACHUSETTS — CHARLES MARSHALL ROBERTS — CIVIL — No. 50339 — REGISTERED PROFESSIONAL ENGINEER

3/12/14

SEAL

CHILDS ENGINEERING CORPORATION
34 WILLIAM WAY BELLINGHAM, MASSACHUSETTS 02019 U.S.A.
Phone: (508) 966–9092
Fax: (508) 966–9096
E–mail: mail@childseng.com

A/E INFO

APPROVED

FOR COMMANDER NAVFAC

ACTIVITY

SATISFACTORY TO DATE

DES CMR | DRW TEQ | CHK CDS

BRANCH MANAGER

CHIEF ENG/ARCH

DEPARTMENT OF THE NAVY — NAVAL FACILITIES ENGINEERING COMMAND

NAVAL FACILITIES ENGINEERING COMMAND

FISC, AKASAKI TERMINAL — SASEBO, JAPAN

# REPAIRS TO FUELING PIER 170

SOIL BORING LOCATIONS AND LOGS

SCALE: AS NOTED

EPROJECT NO.:

CONSTR. CONTR. NO.

NAVFAC DRAWING NO. 10006552

SHEET 4 OF 26

B-001

DRAWFORM REVISION: 10 MARCH 2009

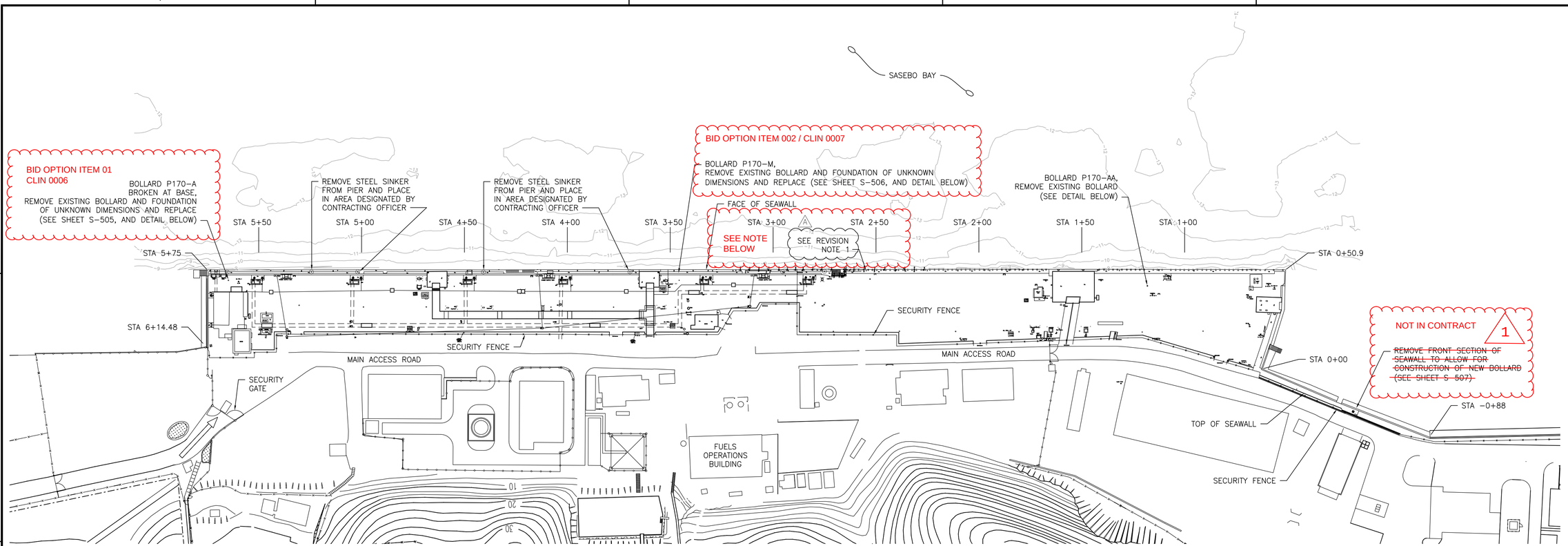


## FUELING PIER 170 SITE AND DEMOLITION PLAN

SCALE: 1:1000

0 20 50 100 M

GRAPHIC SCALE: 1:1000

BID ITEM OPTION 003 / CLIN 0008

REVISION NOTE:

1. BOLLARD P170-R BROKEN AT BASE. REMOVE BOLLARD AND FOUNDATION OF UNKNOWN DIMENSIONS AND REPLACE, (SEE SHEET S-506 AND DETAIL BELOW).

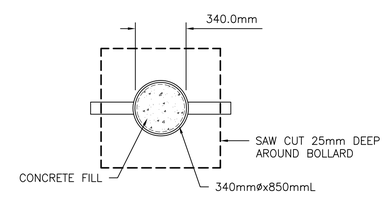


**PLAN**

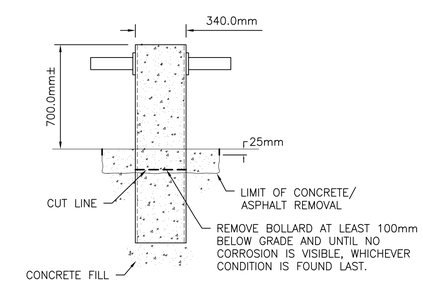


**SECTION**

**DEMOLITION OF EXISTING BOLLARD**

1. SQUARE OFF EDGES OF DEMOLITION AREA A MINIMUM OF 25mm DEEP BY SAW CUTTING.
2. CHIP BACK AND REMOVE CONCRETE TO A MINIMUM OF 100mm, IF CORROSION IS PRESENT ON BOLLARD 100mm BELOW CONCRETE SURFACE, EXCAVATE FURTHER UNTIL NO CORROSION IS PRESENT. REMAINING BOLLARD DEPTH SHALL BE ABANDONED IN PLACE.
3. CUT BOLLARD OFF AT BOTTOM OF EXCAVATION. REMOVE AND DISPOSE OF TOP SECTION OF BOLLARD.
4. PRESENT AREA TO THE CONTRACTING OFFICER FOR APPROVAL.
5. ONCE THE DEMOLISHED AREA IS APPROVED BY THE CONTRACTING OFFICER, FILL WITH CONCRETE RESTORATION MORTAR, AND REPAVE SURFACE TO MATCH EXISTING ASPHALT.

## DEMOLITION OF EXISTING BOLLARD

SCALE: 1:20 C-101, S-102, S-505, S-506 A4

| | | | | |
|---|---|---|---|---|
| 1 | REMOVE BOLLARD 170-GG | 11/12/15 | | |
| A | REPLACE BOLLARD P170-R | 01/29/14 | CMR | APPR |
| SYM | DESCRIPTION | DATE | | |

NAVFAC

COMMONWEALTH OF MASSACHUSETTS CHARLES MARSHALL ROBERTS CIVIL No. 50339 REGISTERED PROFESSIONAL ENGINEER 3/12/14 SEAL

CHILDS ENGINEERING CORPORATION
34 WILLIAM WAY BELLINGHAM, MASSACHUSETTS 02019 U.S.A.
Phone: (508) 966-9092
Fax: (508) 966-9096
E-mail: mail@childseng.com
A/E INFO

APPROVED
FOR COMMANDER NAVFAC
ACTIVITY
SATISFACTORY TO DATE
DES CMR DRW TEQ CHK CDS
BRANCH MANAGER
CHIEF ENG/ARCH

DEPARTMENT OF THE NAVY
NAVAL FACILITIES ENGINEERING COMMAND
NAVAL FACILITIES ENGINEERING COMMAND
FISC, AKASAKI TERMINAL
SASEBO, JAPAN
REPAIRS TO FUELING PIER 170
SITE AND DEMOLITION PLAN

SCALE: AS NOTED
EPROJECT NO.:
CONSTR. CONTR. NO.
NAVFAC DRAWING NO. 10006553
SHEET 5 OF 26

C-101

DRAWFORM REVISION: 10 MARCH 2009

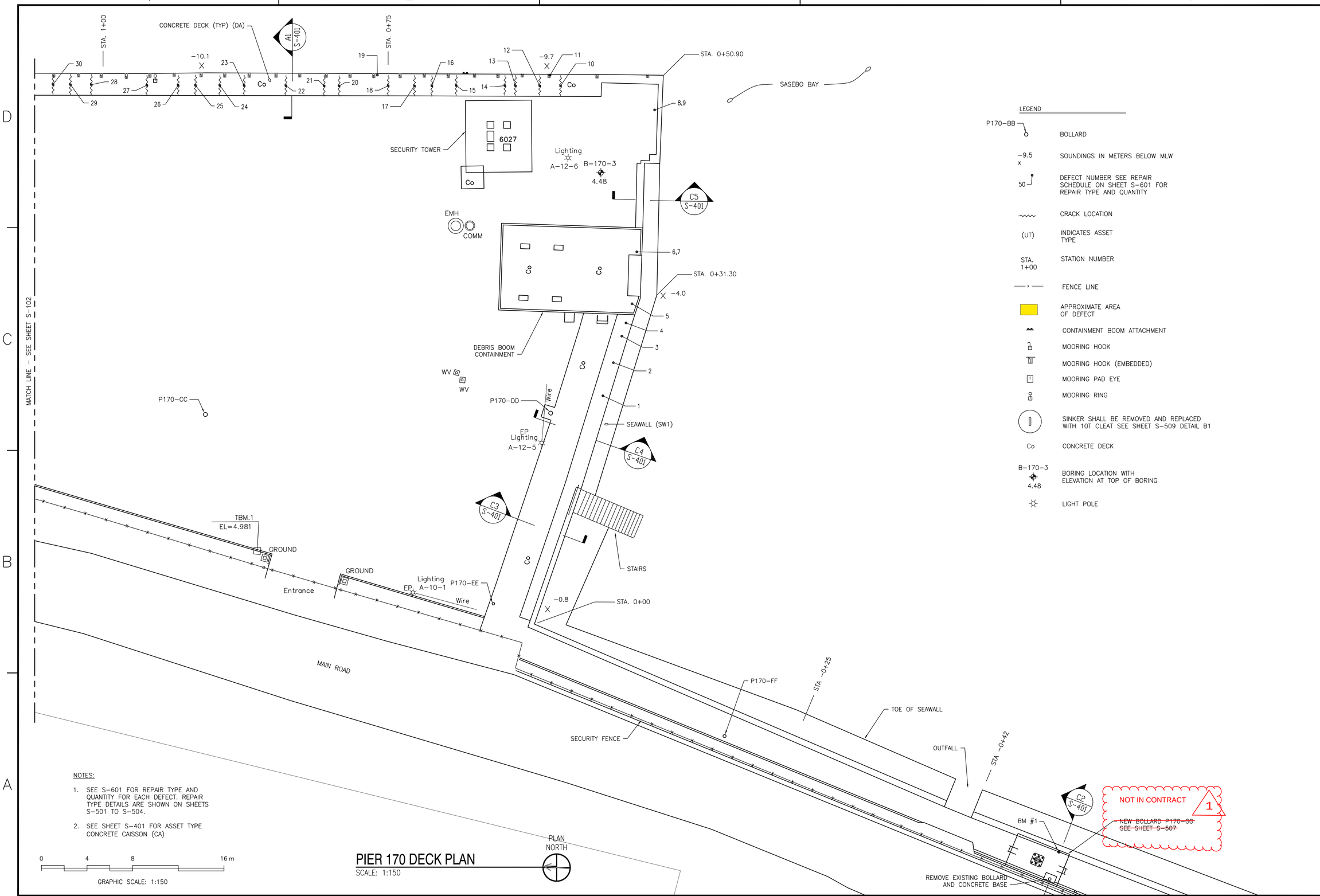


# PIER 170 DECK PLAN

SCALE: 1:150

NOTES:

1. SEE S-601 FOR REPAIR TYPE AND QUANTITY FOR EACH DEFECT. REPAIR TYPE DETAILS ARE SHOWN ON SHEETS S-501 TO S-504.
2. SEE SHEET S-401 FOR ASSET TYPE CONCRETE CAISSON (CA)

LEGEND

| | |
|---|---|
| P170-BB | BOLLARD |
| -9.5 x | SOUNDINGS IN METERS BELOW MLW |
| 50 | DEFECT NUMBER SEE REPAIR SCHEDULE ON SHEET S-601 FOR REPAIR TYPE AND QUANTITY |
| | CRACK LOCATION |
| (UT) | INDICATES ASSET TYPE |
| STA. 1+00 | STATION NUMBER |
| —x— | FENCE LINE |
| | APPROXIMATE AREA OF DEFECT |
| | CONTAINMENT BOOM ATTACHMENT |
| | MOORING HOOK |
| | MOORING HOOK (EMBEDDED) |
| | MOORING PAD EYE |
| | MOORING RING |
| | SINKER SHALL BE REMOVED AND REPLACED WITH 10T CLEAT SEE SHEET S-509 DETAIL B1 |
| Co | CONCRETE DECK |
| B-170-3 4.48 | BORING LOCATION WITH ELEVATION AT TOP OF BORING |
| | LIGHT POLE |

| SYM | DESCRIPTION | DATE | APPR |
|---|---|---|---|
| 1 | REMOVE BOLLARD 170-GG | 11/12/15 | |

NAVFAC

COMMONWEALTH OF MASSACHUSETTS
CHARLES MARSHALL ROBERTS
CIVIL
No. 50339
REGISTERED PROFESSIONAL ENGINEER
3/12/14
SEAL


CHILDS ENGINEERING CORPORATION
34 WILLIAM WAY BELLINGHAM, MASSACHUSETTS 02019 U.S.A.
Phone: (508) 966-9092
Fax: (508) 966-9096
E-mail: mail@childseng.com
A/E INFO


APPROVED

FOR COMMANDER NAVFAC

ACTIVITY

SATISFACTORY TO DATE

DES CMR DRW TEQ CHK CDS

BRANCH MANAGER

CHIEF ENG/ARCH

DEPARTMENT OF THE NAVY
NAVAL FACILITIES ENGINEERING COMMAND
NAVAL FACILITIES ENGINEERING COMMAND
FISC, AKASAKI TERMINAL
SASEBO, JAPAN

REPAIRS TO FUELING PIER 170

DECK PLAN

SCALE: AS NOTED

EPROJECT NO.:

CONSTR. CONTR. NO.

NAVFAC DRAWING NO. 10006554

SHEET 6 OF 26

S-101

DRAWFORM REVISION: 10 MARCH 2009

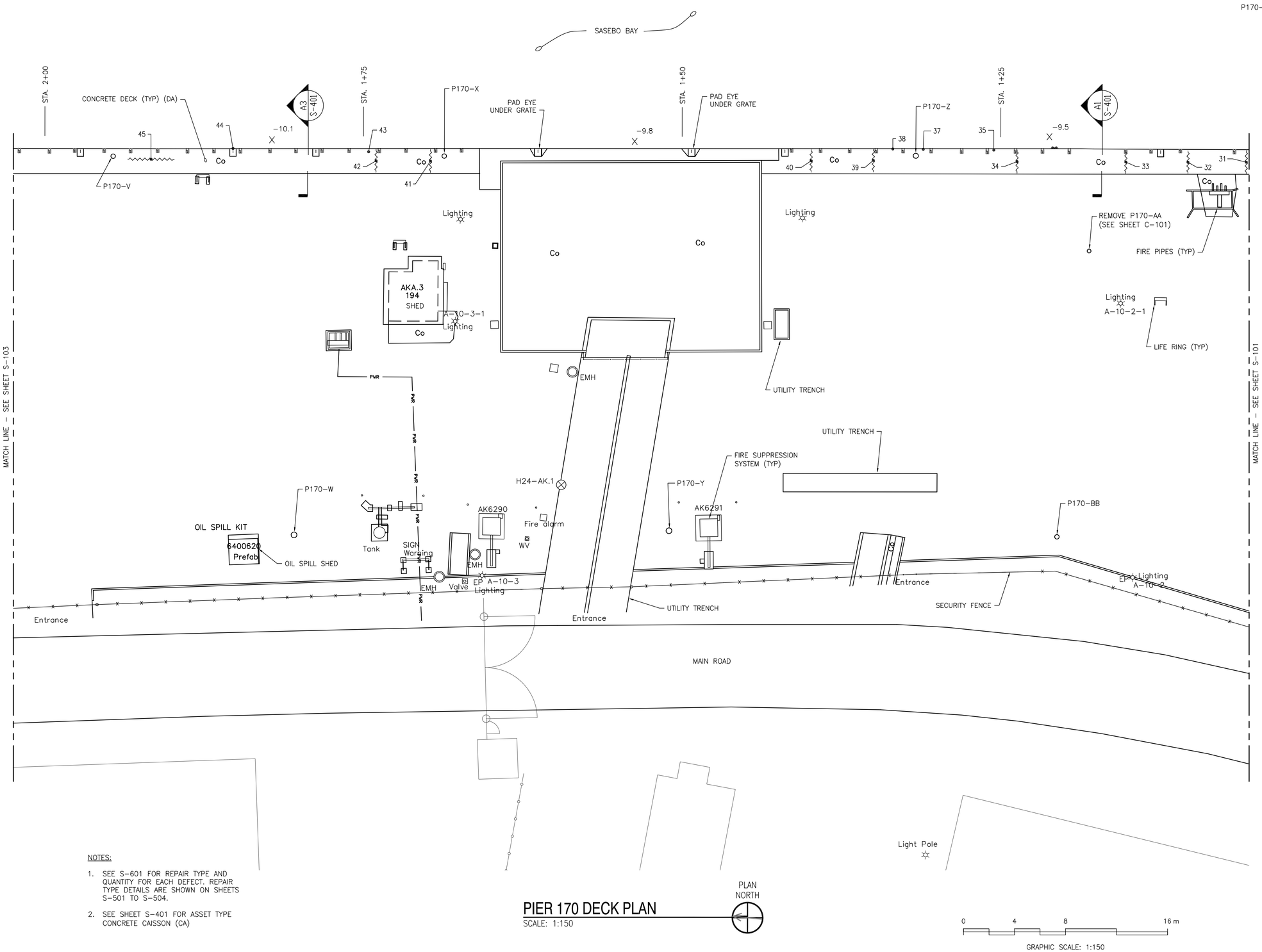


NOTES:

1. SEE S-601 FOR REPAIR TYPE AND QUANTITY FOR EACH DEFECT. REPAIR TYPE DETAILS ARE SHOWN ON SHEETS S-501 TO S-504.
2. SEE SHEET S-401 FOR ASSET TYPE CONCRETE CAISSON (CA)

## PIER 170 DECK PLAN

SCALE: 1:150

PLAN NORTH

0 4 8 16 m

GRAPHIC SCALE: 1:150

LEGEND

| | |
|---|---|
| P170-BB | BOLLARD |
| -9.5 x | SOUNDINGS IN METERS BELOW MLW |
| 50 | DEFECT NUMBER SEE REPAIR SCHEDULE ON SHEET S-601 FOR REPAIR TYPE AND QUANTITY |
| | CRACK LOCATION |
| (UT) | INDICATES ASSET TYPE |
| STA. 1+00 | STATION NUMBER |
| — x — | FENCE LINE |
| | APPROXIMATE AREA OF DEFECT |
| | CONTAINMENT BOOM ATTACHMENT |
| | MOORING HOOK |
| | MOORING HOOK (EMBEDDED) |
| | MOORING PAD EYE |
| | MOORING RING |
| | SINKER SHALL BE REMOVED AND REPLACED WITH 10T CLEAT SEE SHEET S-509 DETAIL B1 |
| Co | CONCRETE DECK |
| B-170-3 4.48 | BORING LOCATION WITH ELEVATION AT TOP OF BORING |
| PVR | UNDERGROUND POTABLE WATER |
| | LIGHT POLE |

| APPR | DATE | DESCRIPTION | SYM |
|---|---|---|---|

NAVFAC

COMMONWEALTH OF MASSACHUSETTS CHARLES MARSHALL ROBERTS CIVIL No. 50339 REGISTERED PROFESSIONAL ENGINEER

3/12/14

SEAL

CHILDS ENGINEERING CORPORATION
34 WILLIAM WAY BELLINGHAM, MASSACHUSETTS 02019 U.S.A.
Phone: (508) 966-9092
Fax: (508) 966-9096
E-mail: mail@childseng.com
A/E INFO

APPROVED

FOR COMMANDER NAVFAC

ACTIVITY

SATISFACTORY TO DATE

DES CMR DRW TEQ CHK CDS

BRANCH MANAGER

CHIEF ENG/ARCH

DEPARTMENT OF THE NAVY
NAVAL FACILITIES ENGINEERING COMMAND
NAVAL FACILITIES ENGINEERING COMMAND
FISC, AKASAKI TERMINAL
SASEBO, JAPAN

# REPAIRS TO FUELING PIER 170

DECK PLAN

SCALE: AS NOTED

EPROJECT NO.:

CONSTR. CONTR. NO.

NAVFAC DRAWING NO. 10006555

SHEET 7 OF 26

S-102

DRAWFORM REVISION: 10 MARCH 2009

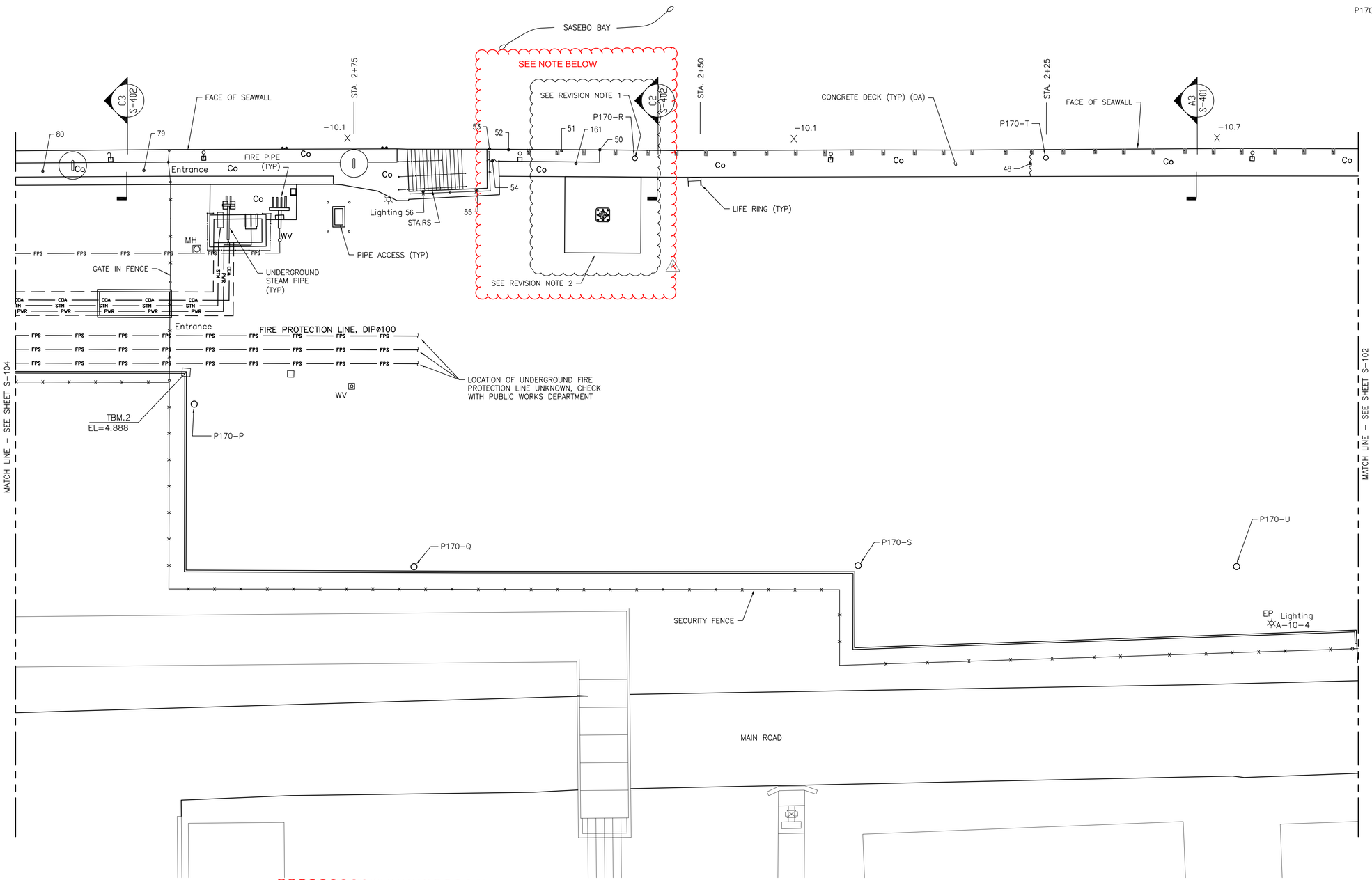


LEGEND

| | |
|---|---|
| P170-BB | BOLLARD |
| -9.5 x | SOUNDINGS IN METERS BELOW MLW |
| 50 | DEFECT NUMBER SEE REPAIR SCHEDULE ON SHEET S-601 FOR REPAIR TYPE AND QUANTITY |
| | CRACK LOCATION |
| (UT) | INDICATES ASSET TYPE |
| STA. 1+00 | STATION NUMBER |
| — x — | FENCE LINE |
| | APPROXIMATE AREA OF DEFECT |
| | CONTAINMENT BOOM ATTACHMENT |
| | MOORING HOOK |
| | MOORING HOOK (EMBEDDED) |
| | MOORING PAD EYE |
| | MOORING RING |
| | SINKER SHALL BE REMOVED AND REPLACED WITH 10T CLEAT SEE SHEET S-509 DETAIL B1 |
| Co | CONCRETE DECK |
| B-170-3 4.48 | BORING LOCATION WITH ELEVATION AT TOP OF BORING |
| — PWR — | UNDERGROUND POTABLE WATER |
| — STM — | UNDERGROUND STEAM |
| — CDA — | UNDERGROUND COMPRESSED AIR |
| — FPS — | UNDERGROUND FIRE PROTECTION WATER DISTRIBUTION SYSTEM |
| | LIGHT POLE |

NOTES:

1. SEE S-601 FOR REPAIR TYPE AND QUANTITY FOR EACH DEFECT. REPAIR TYPE DETAILS ARE SHOWN ON SHEETS S-501 TO S-504.
2. SEE SHEET S-401 FOR ASSET TYPE CONCRETE CAISSON (CA)

BID OPTION ITEM 003 / CLIN 0008

REVISION NOTES:

1. REMOVE EXISTING BOLLARD P170-R.
2. NEW BOLLARD SEE SHEET S-506

# PIER 170 DECK PLAN

SCALE: 1:150

PLAN NORTH

0 4 8 16 m

GRAPHIC SCALE: 1:150

| SYM | DESCRIPTION | DATE | APPR |
|---|---|---|---|
| A | REPLACE BOLLARD P170-R | 01/20/14 | CMR |

NAVFAC

COMMONWEALTH OF MASSACHUSETTS CHARLES MARSHALL ROBERTS CIVIL No. 50339 REGISTERED PROFESSIONAL ENGINEER

3/12/14

SEAL

CHILDS ENGINEERING CORPORATION
34 WILLIAM WAY BELLINGHAM, MASSACHUSETTS 02019 U.S.A.
Phone: (508) 966-9092
Fax: (508) 966-9096
E-mail: mail@childseng.com
A/E INFO

APPROVED

FOR COMMANDER NAVFAC

ACTIVITY

SATISFACTORY TO DATE

DES CMR DRW TEQ CHK CDS

BRANCH MANAGER

CHIEF ENG/ARCH

DEPARTMENT OF THE NAVY
NAVAL FACILITIES ENGINEERING COMMAND
NAVAL FACILITIES ENGINEERING COMMAND
FISC, AKASAKI TERMINAL
SASEBO, JAPAN

REPAIRS TO FUELING PIER 170

DECK PLAN

SCALE: AS NOTED

EPROJECT NO.:

CONSTR. CONTR. NO.

NAVFAC DRAWING NO. 10006556

SHEET 8 OF 26

S-103

DRAWFORM REVISION: 10 MARCH 2009

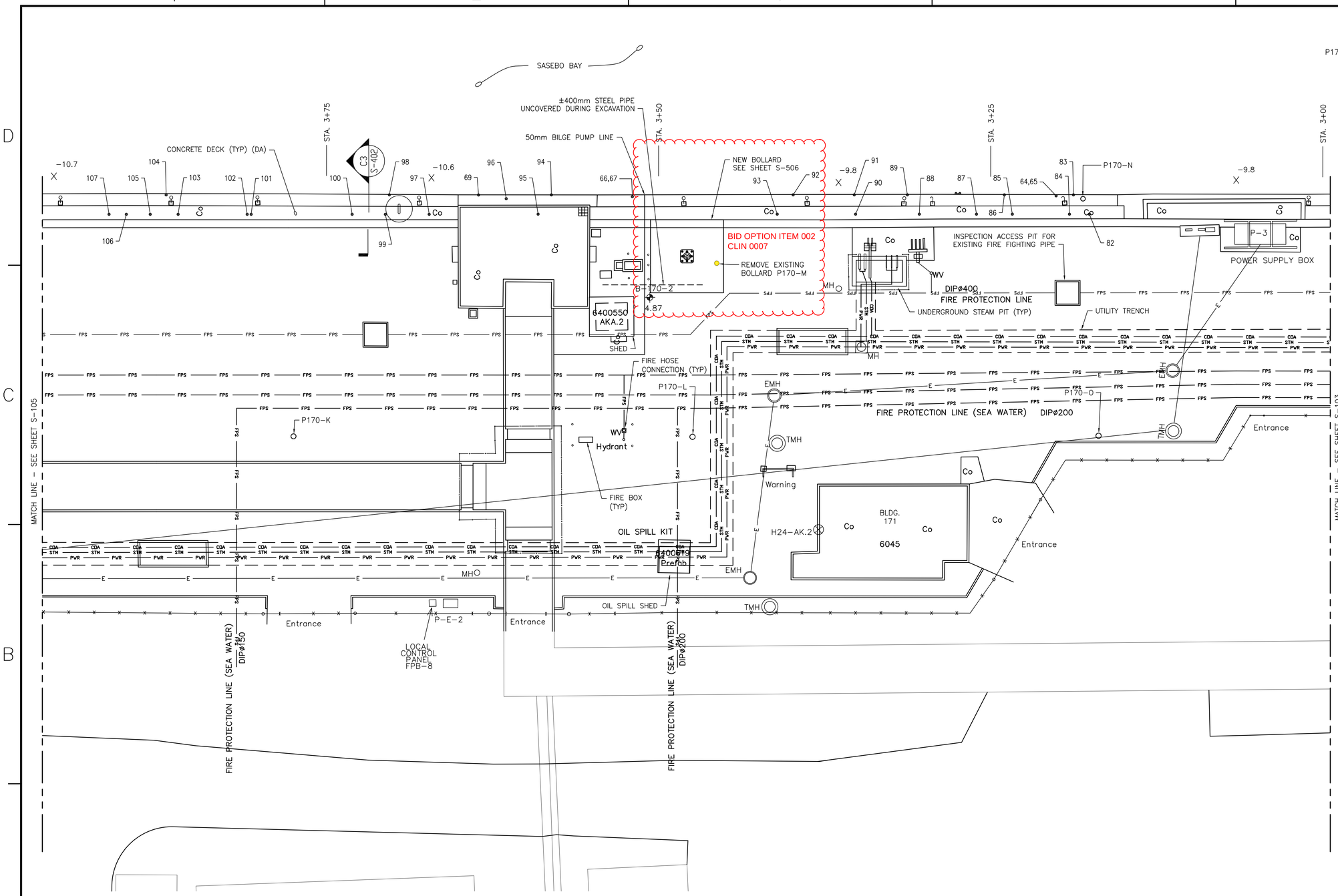


LEGEND

| | |
|---|---|
| P170-BB | BOLLARD |
| −9.5 x | SOUNDINGS IN METERS BELOW MLW |
| 50 | DEFECT NUMBER SEE REPAIR SCHEDULE ON SHEET S-601 FOR REPAIR TYPE AND QUANTITY |
| | CRACK LOCATION |
| (UT) | INDICATES ASSET TYPE |
| STA. 1+00 | STATION NUMBER |
| —x— | FENCE LINE |
| | APPROXIMATE AREA OF DEFECT |
| | CONTAINMENT BOOM ATTACHMENT |
| | MOORING HOOK |
| | MOORING HOOK (EMBEDDED) |
| | MOORING PAD EYE |
| | MOORING RING |
| | SINKER SHALL BE REMOVED AND REPLACED WITH 10T CLEAT SEE SHEET S-509 DETAIL B1 |
| Co | CONCRETE DECK |
| B-170-2 4.87 | BORING LOCATION WITH ELEVATION AT TOP OF BORING |
| PWR | UNDERGROUND POTABLE WATER |
| STM | UNDERGROUND STEAM |
| CDA | UNDERGROUND COMPRESSED AIR |
| FPS | UNDERGROUND FIRE PROTECTION WATER DISTRIBUTION SYSTEM |

NOTES:

1. SEE S-601 FOR REPAIR TYPE AND QUANTITY FOR EACH DEFECT. REPAIR TYPE DETAILS ARE SHOWN ON SHEETS S-501 TO S-504.
2. SEE SHEET S-401 FOR ASSET TYPE CONCRETE CAISSON (CA)

## PIER 170 DECK PLAN

SCALE: 1:150

PLAN NORTH

0 4 8 16 m

GRAPHIC SCALE: 1:150

| APPR | DATE | DESCRIPTION | STM |
|---|---|---|---|

NAVFAC

COMMONWEALTH OF MASSACHUSETTS CHARLES MARSHALL ROBERTS CIVIL No. 50339 REGISTERED PROFESSIONAL ENGINEER 3/12/14 SEAL

CHILDS ENGINEERING CORPORATION
34 WILLIAM WAY BELLINGHAM, MASSACHUSETTS 02019 U.S.A.
Phone: (508) 966-9092
Fax: (508) 966-9096
E-mail: mail@childseng.com
A/E INFO

APPROVED

FOR COMMANDER NAVFAC

ACTIVITY

SATISFACTORY TO DATE

DES CMR DRW TEQ CHK CDS

BRANCH MANAGER

CHIEF ENG/ARCH

DEPARTMENT OF THE NAVY
NAVAL FACILITIES ENGINEERING COMMAND
NAVAL FACILITIES ENGINEERING COMMAND
FISC, AKASAKI TERMINAL
SASEBO, JAPAN

# REPAIRS TO FUELING PIER 170

DECK PLAN

SCALE: AS NOTED

EPROJECT NO.:

CONSTR. CONTR. NO.

NAVFAC DRAWING NO. 10006557

SHEET 9 OF 26

S-104

DRAWFORM REVISION: 10 MARCH 2009

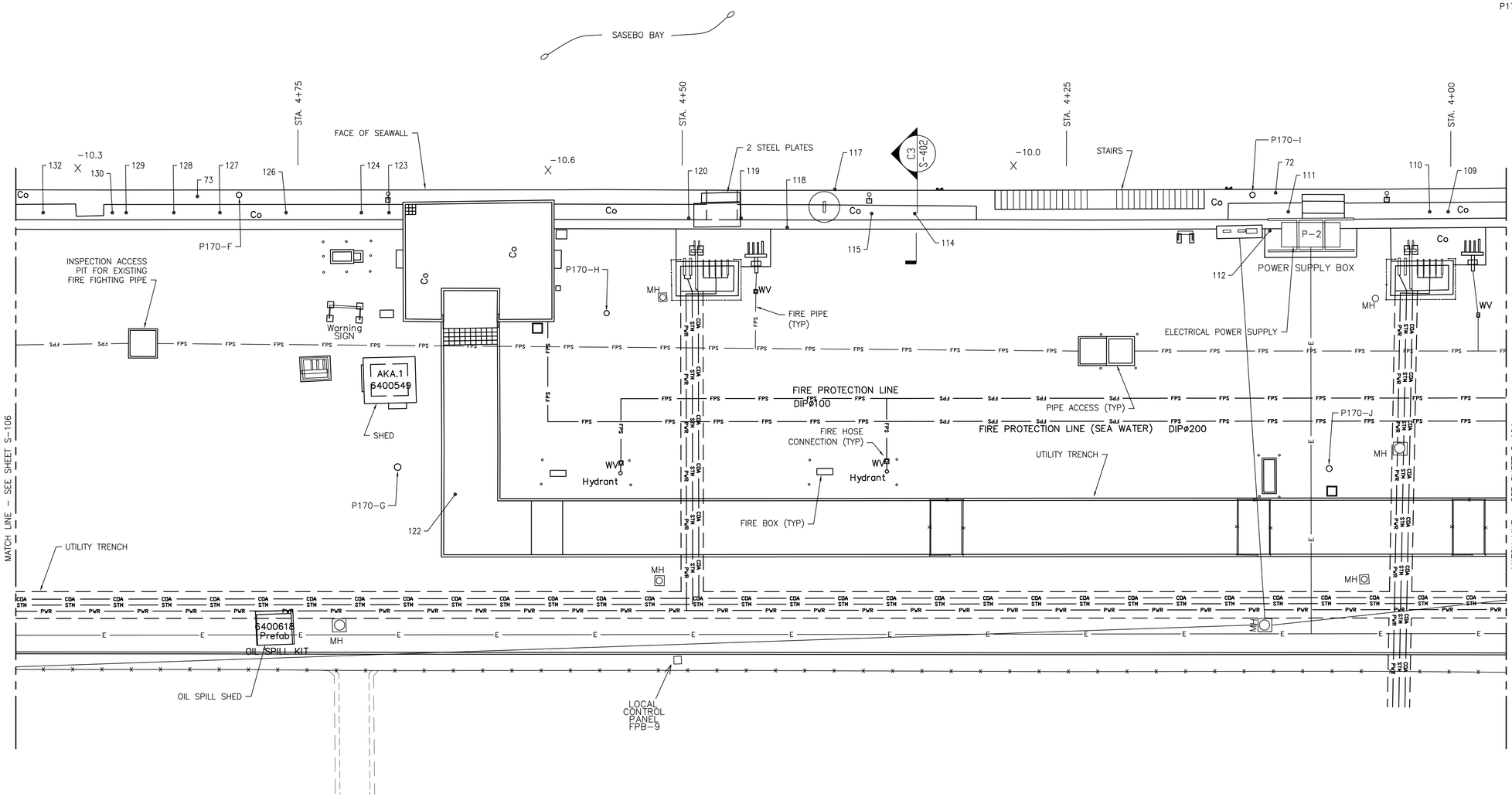


LEGEND

| | |
|---|---|
| P170-BB | BOLLARD |
| -9.5 x | SOUNDINGS IN METERS BELOW MLW |
| 50 | DEFECT NUMBER SEE REPAIR SCHEDULE ON SHEET S-601 FOR REPAIR TYPE AND QUANTITY |
| | CRACK LOCATION |
| (UT) | INDICATES ASSET TYPE |
| STA. 1+00 | STATION NUMBER |
| —x— | FENCE LINE |
| | APPROXIMATE AREA OF DEFECT |
| | CONTAINMENT BOOM ATTACHMENT |
| | MOORING HOOK |
| | MOORING HOOK (EMBEDDED) |
| | MOORING PAD EYE |
| | MOORING RING |
| | SINKER SHALL BE REMOVED AND REPLACED WITH 10T CLEAT SEE SHEET S-509 DETAIL B1 |
| Co | CONCRETE DECK |
| B-170-2 4.87 | BORING LOCATION WITH ELEVATION AT TOP OF BORING |
| —PWR— | UNDERGROUND POTABLE WATER |
| —STM— | UNDERGROUND STEAM |
| —CDA— | UNDERGROUND COMPRESSED AIR |
| —FPS— | UNDERGROUND FIRE PROTECTION WATER DISTRIBUTION SYSTEM |

NOTES:

1. SEE S-601 FOR REPAIR TYPE AND QUANTITY FOR EACH DEFECT. REPAIR TYPE DETAILS ARE SHOWN ON SHEETS S-501 TO S-504.
2. SEE SHEET S-401 FOR ASSET TYPE CONCRETE CAISSON (CA)

## PIER 170 DECK PLAN

SCALE: 1:150

PLAN NORTH

0 4 8 16 m

GRAPHIC SCALE: 1:150

| APPR | DATE | DESCRIPTION | SYM |
|---|---|---|---|

NAVFAC

COMMONWEALTH OF MASSACHUSETTS CHARLES MARSHALL ROBERTS CIVIL No. 50339 REGISTERED PROFESSIONAL ENGINEER 3/12/14 SEAL

CHILDS ENGINEERING CORPORATION
34 WILLIAM WAY BELLINGHAM, MASSACHUSETTS 02019 U.S.A.
Phone: (508) 966-9092
Fax: (508) 966-9096
E-mail: mail@childseng.com
A/E INFO

APPROVED
FOR COMMANDER NAVFAC
ACTIVITY
SATISFACTORY TO DATE
DES CMR DRW TEQ CHK CDS
BRANCH MANAGER
CHIEF ENG/ARCH

DEPARTMENT OF THE NAVY
NAVAL FACILITIES ENGINEERING COMMAND
NAVAL FACILITIES ENGINEERING COMMAND
FISC, AKASAKI TERMINAL
SASEBO, JAPAN
REPAIRS TO FUELING PIER 170
DECK PLAN

SCALE: AS NOTED
EPROJECT NO.
CONSTR. CONTR. NO.
NAVFAC DRAWING NO. 10006558
SHEET 10 OF 26
S-105

DRAWFORM REVISION: 10 MARCH 2009

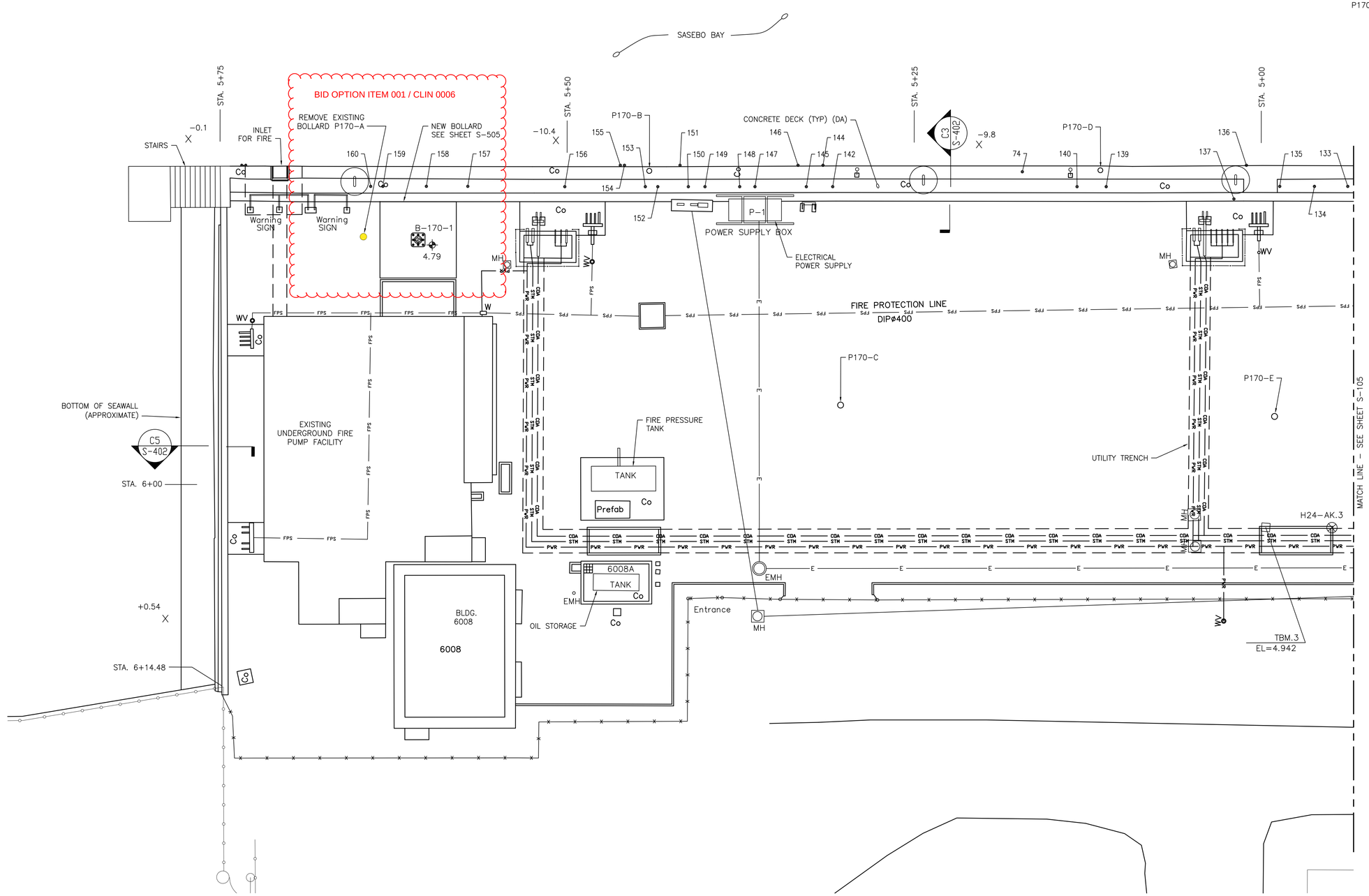


LEGEND

| | |
|---|---|
| P170-BB | BOLLARD |
| -9.5 | SOUNDINGS IN METERS BELOW MLW |
| 50 | DEFECT NUMBER SEE REPAIR SCHEDULE ON SHEET S-601 FOR REPAIR TYPE AND QUANTITY |
| | CRACK LOCATION |
| (UT) | INDICATES ASSET TYPE |
| STA. 1+00 | STATION NUMBER |
| —x— | FENCE LINE |
| | APPROXIMATE AREA OF DEFECT |
| | CONTAINMENT BOOM ATTACHMENT |
| | MOORING HOOK |
| | MOORING HOOK (EMBEDDED) |
| | MOORING PAD EYE |
| | MOORING RING |
| | SINKER SHALL BE REMOVED AND REPLACED WITH 10T CLEAT SEE SHEET S-509 DETAIL B1 |
| Co | CONCRETE DECK |
| B-170-1 4.79 | BORING LOCATION WITH ELEVATION AT TOP OF BORING |
| —PWR— | UNDERGROUND POTABLE WATER |
| —STM— | UNDERGROUND STEAM |
| —CDA— | UNDERGROUND COMPRESSED AIR |
| —FPS— | UNDERGROUND FIRE PROTECTION WATER DISTRIBUTION SYSTEM |

NOTES:

1. SEE S-601 FOR REPAIR TYPE AND QUANTITY FOR EACH DEFECT. REPAIR TYPE DETAILS ARE SHOWN ON SHEETS S-501 TO S-504.
2. SEE SHEET S-401 FOR ASSET TYPE CONCRETE CAISSON (CA)

## PIER 170 DECK PLAN

SCALE: 1:150

PLAN NORTH

0 4 8 16 m

GRAPHIC SCALE: 1:150

| SYM | DESCRIPTION | DATE | APPR |
|---|---|---|---|

NAVFAC

COMMONWEALTH OF MASSACHUSETTS
CHARLES MARSHALL ROBERTS
CIVIL
No. 50339
REGISTERED PROFESSIONAL ENGINEER
3/12/14
SEAL

CHILDS ENGINEERING CORPORATION
34 WILLIAM WAY BELLINGHAM, MASSACHUSETTS 02019 U.S.A.
Phone: (508) 966-9092
Fax: (508) 966-9096
E-mail: mail@childseng.com
A/E INFO

APPROVED

FOR COMMANDER NAVFAC

ACTIVITY

SATISFACTORY TO DATE

DES CMR DRW TEQ CHK CDS

BRANCH MANAGER

CHIEF ENG/ARCH

DEPARTMENT OF THE NAVY
NAVAL FACILITIES ENGINEERING COMMAND
NAVAL FACILITIES ENGINEERING COMMAND
FISC, AKASAKI TERMINAL
SASEBO, JAPAN
REPAIRS TO FUELING PIER 170
DECK PLAN

SCALE: AS NOTED

EPROJECT NO.:

CONSTR. CONTR. NO.

NAVFAC DRAWING NO. 10006559

SHEET 11 OF 26

S-106

DRAWFORM REVISION: 10 MARCH 2009

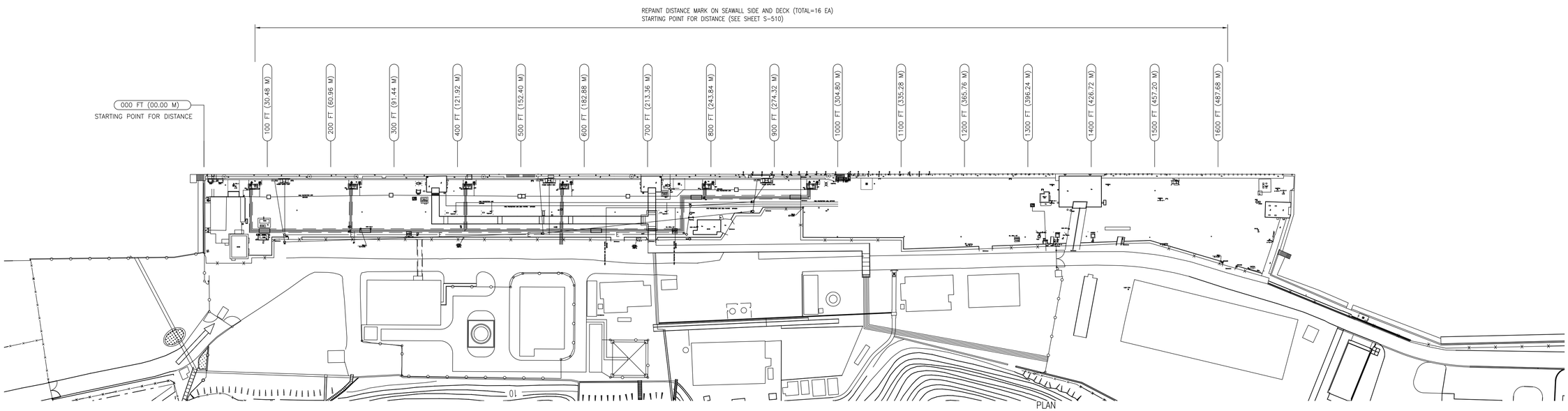


# PIER 170 DISTANCE MARK LOCATION PLAN

SCALE: 1:1000

PLAN NORTH

0 20 50 100 M

GRAPHIC SCALE: 1:1000

NOTE:

1. CONSTRUCTION BASELINE IS DEFINED BY THE OUTSHORE CORNER OF THE TOP STEP AT THE NORTH END OF THE PIER, AND BY THE OUTSHORE CORNER OF THE TOP OF SEAWALL AT THE SOUTH END OF THE PIER.

| SYM | DESCRIPTION | DATE | APPR |
|---|---|---|---|

NAVFAC

COMMONWEALTH OF MASSACHUSETTS
CHARLES MARSHALL ROBERTS
CIVIL
No. 50339
REGISTERED PROFESSIONAL ENGINEER

3/12/14

SEAL

CHILDS ENGINEERING CORPORATION
34 WILLIAM WAY BELLINGHAM, MASSACHUSETTS 02019 U.S.A.
Phone: (508) 966-9092
Fax: (508) 966-9096
E-mail: mail@childseng.com
A/E INFO

APPROVED

FOR COMMANDER NAVFAC

ACTIVITY

SATISFACTORY TO DATE

DES CMR DRW TEQ CHK CDS

BRANCH MANAGER

CHIEF ENG/ARCH

DEPARTMENT OF THE NAVY
NAVAL FACILITIES ENGINEERING COMMAND
NAVAL FACILITIES ENGINEERING COMMAND
FISC, AKASAKI TERMINAL
SASEBO, JAPAN
REPAIRS TO FUELING PIER 170
DISTANCE MARK LOCATION PLAN

SCALE: AS NOTED

EPROJECT NO.

CONSTR. CONTR. NO.

NAVFAC DRAWING NO. 10006560

SHEET 12 OF 26

S-107

DRAWFORM REVISION: 10 MARCH 2009

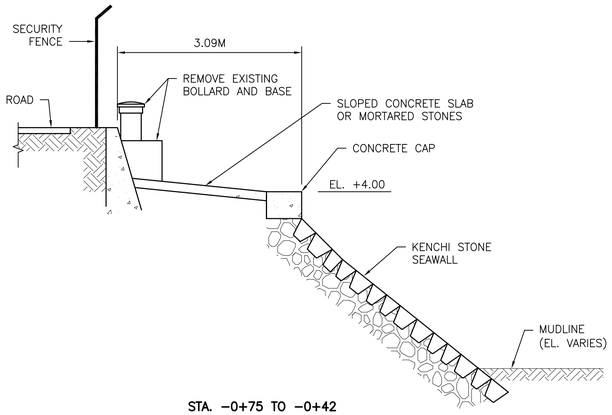


STA. −0+75 TO −0+42

## FUELING PIER 170 SECTION 0 (C2)

SCALE 1:50 S−101

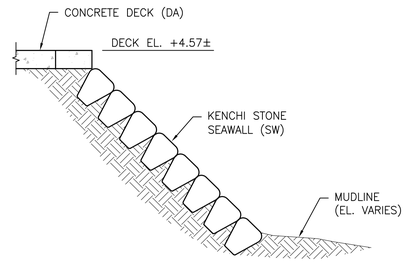


STA. 0+00 TO 0+11

## FUELING PIER 170 SECTION 1 (C3)

SCALE 1:50 S−101

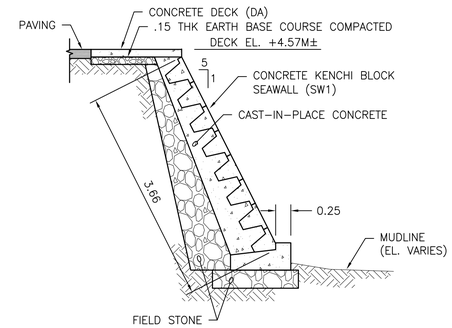


STA. 0+13 TO 0+31

## FUELING PIER 170 SECTION 2 (C4)

SCALE 1:50 S−101

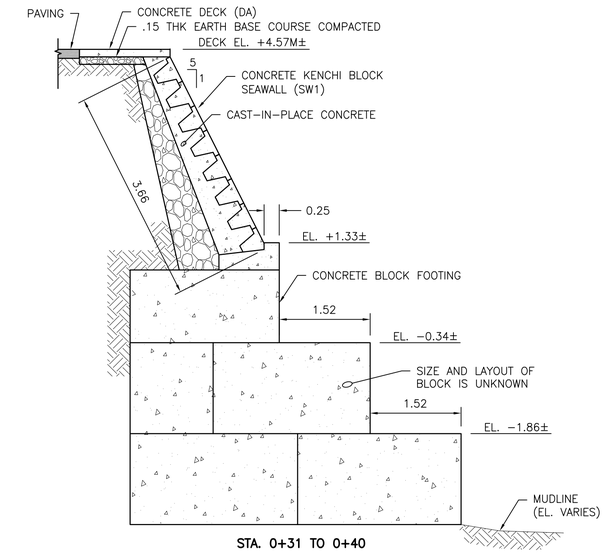


STA. 0+31 TO 0+40

## FUELING PIER 170 SECTION 3 (C5)

SCALE 1:50 S−101

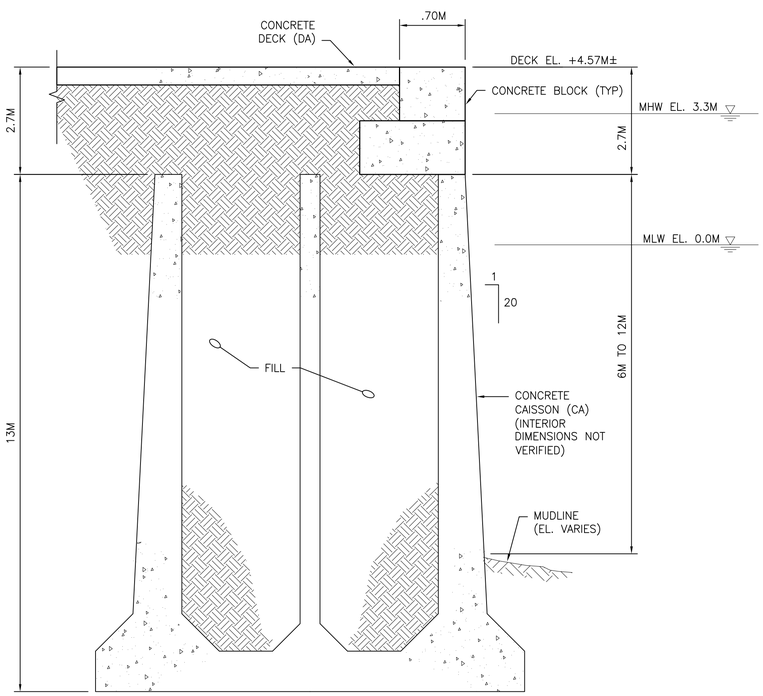


STA. 0+40 TO 1+18

## FUELING PIER 170 SECTION 4 (A1)

SCALE 1:75 S−101, S−102

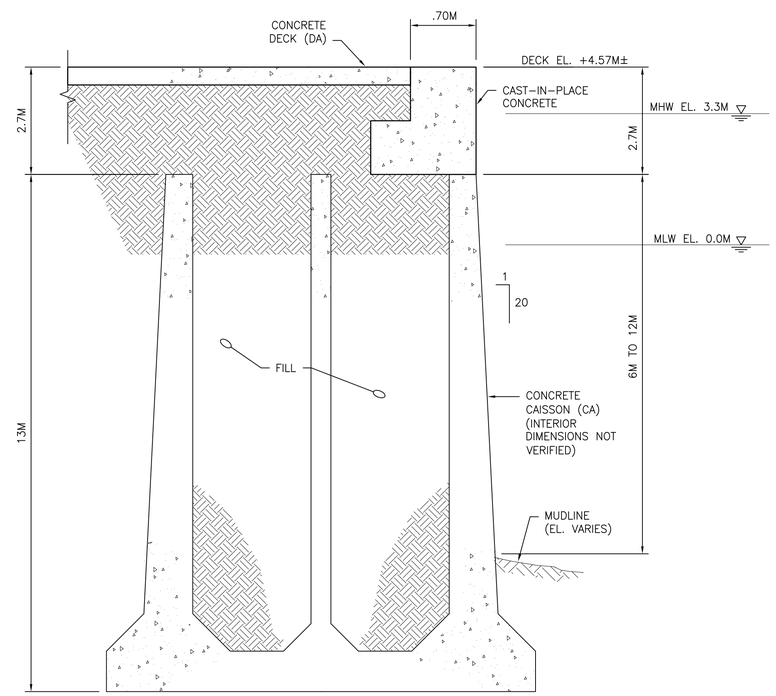


STA. 1+18 TO 2+40

## FUELING PIER 170 SECTION 5 (A3)

SCALE 1:75 S−102, S−103

0 2.0 4.0 8.0 m

GRAPHIC SCALE: 1:75

0 1 2 5 m

GRAPHIC SCALE: 1:50

| SYM | DESCRIPTION | DATE | APPR |
|---|---|---|---|

NAVFAC

COMMONWEALTH OF MASSACHUSETTS
CHARLES MARSHALL ROBERTS
CIVIL
No. 50339
REGISTERED PROFESSIONAL ENGINEER
3/12/14
SEAL


CHILDS ENGINEERING CORPORATION
34 WILLIAM WAY BELLINGHAM, MASSACHUSETTS 02019 U.S.A.
Phone: (508) 966−9092
Fax: (508) 966−9096
E−mail: mail@childseng.com
A/E INFO


APPROVED
FOR COMMANDER NAVFAC
ACTIVITY
SATISFACTORY TO DATE
DES CMR DRW TEQ CHK CDS
BRANCH MANAGER
CHIEF ENG/ARCH

DEPARTMENT OF THE NAVY
NAVAL FACILITIES ENGINEERING COMMAND
NAVAL FACILITIES ENGINEERING COMMAND
FISC, AKASAKI TERMINAL
SASEBO, JAPAN

# REPAIRS TO FUELING PIER 170

SECTIONS

SCALE: AS NOTED
EPROJECT NO.:
CONSTR. CONTR. NO.
NAVFAC DRAWING NO. 10006561
SHEET 13 OF 26

S-301

DRAWFORM REVISION: 10 MARCH 2009

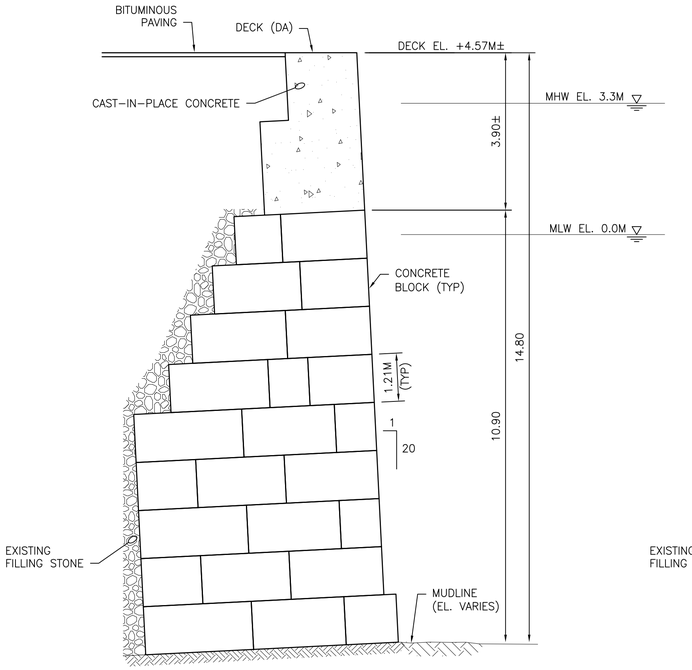


STA. 2+40 TO 2+71

## FUELING PIER 170 SECTION 6 (C2)

SCALE 1:75 S-103

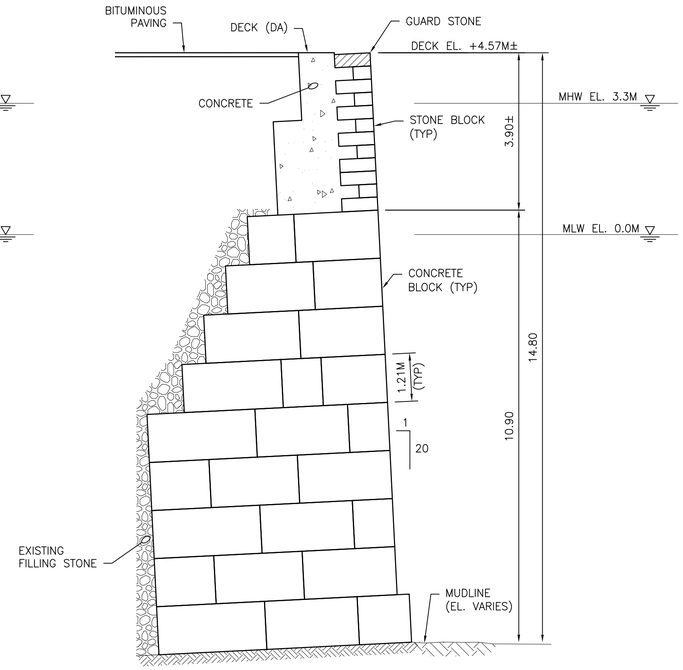


STA. 2+71 TO 5+76

## FUELING PIER 170 SECTION 7 (C3)

SCALE 1:75 S-103 TO S-106

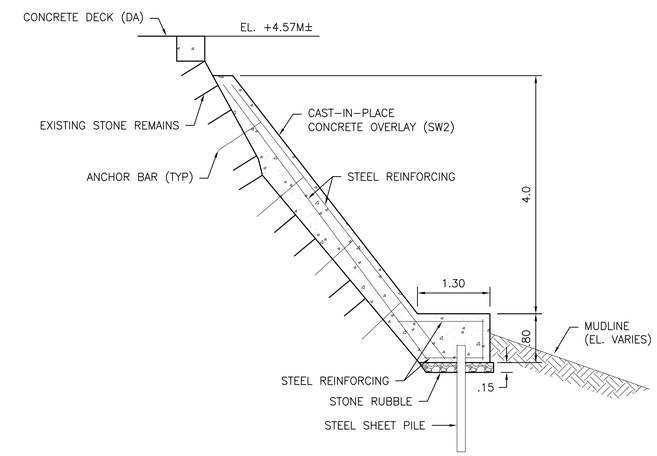


STA. 5+76 TO 6+14

## FUELING PIER 170 SECTION 8 (C5)

SCALE 1:50 S-106

0 1 2 5 m

GRAPHIC SCALE: 1:50

0 2.0 4.0 8.0 m

GRAPHIC SCALE: 1:75

| APPR | DATE | DESCRIPTION | SYM |
|---|---|---|---|

NAVFAC

COMMONWEALTH OF MASSACHUSETTS
CHARLES MARSHALL ROBERTS
CIVIL
No. 50339
REGISTERED PROFESSIONAL ENGINEER
3/12/14
SEAL

CHILDS ENGINEERING CORPORATION
34 WILLIAM WAY BELLINGHAM, MASSACHUSETTS 02019 U.S.A.
Phone: (508) 966-9092
Fax: (508) 966-9096
E-mail: mail@childseng.com
A/E INFO.

APPROVED
FOR COMMANDER NAVFAC
ACTIVITY
SATISFACTORY TO DATE
DES CMR | DRW TEQ | CHK CDS
BRANCH MANAGER
CHIEF ENG/ARCH

DEPARTMENT OF THE NAVY
NAVAL FACILITIES ENGINEERING COMMAND
NAVAL FACILITIES ENGINEERING COMMAND
FISC, AKASAKI TERMINAL
SASEBO, JAPAN
REPAIRS TO FUELING PIER 170
SECTIONS

SCALE: AS NOTED
EPROJECT NO.:
CONSTR. CONTR. NO.
NAVFAC DRAWING NO.
10006562
SHEET 14 OF 26
S-302

DRAWFORM REVISION: 10 MARCH 2009

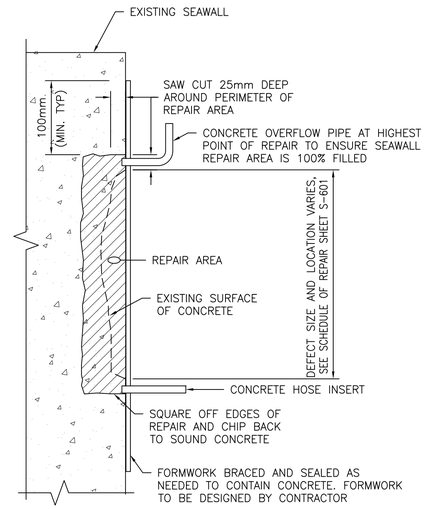


## REPAIR TYPE A DETAIL

SCALE 1:5 S-101 TO S-106 C3

**UNDERWATER PARTIAL DEPTH SPALL REPAIR 75mm AND GREATER WITHOUT REINFORCING STEEL USING FORM AND PUMP METHODS**

1. CHIP OUT AND REMOVE ALL LOOSE CONCRETE FROM DAMAGED AREA.
2. SQUARE OFF LIMITS OF REPAIR AREA A MINIMUM OF 25mm DEEP BY SAW CUTTING OR CHIPPING. CHIP BACK TO SOUND CONCRETE. MINIMUM DEPTH FOR UNDERWATER REPAIRS IS 75mm. CONTRACTOR SHALL VERIFY DEPTH TO REINFORCING PRIOR TO CUTTING.
3. PRESENT PREPARED REPAIR AREA TO THE CONTRACTING OFFICER.
4. SECURE FORMS IN PLACE TO PREVENT CONCRETE FROM LEAKING OUT OF FORMS.
5. PRESENT FORMWORK TO THE CONTRACTING OFFICER FOR APPROVAL.
6. ONCE REPAIR AREA IS APPROVED BY THE CONTRACTING OFFICER, FILL WITH CONCRETE RESTORATION MORTAR. RESTORE AND RECONSTRUCT THE ORIGINAL DIMENSIONS OF THE STRUCTURAL ELEMENT BEING REPAIRED. FOLLOW MANUFACTURER'S RECOMMENDATION FOR FORM AND PUMP PLACEMENT.
7. LEAVE FORMS IN PLACE FOR A MINIMUM OF 7 DAYS.

**SCHEDULE OF MATERIALS**

1. SPALLED CONCRETE AREAS SHALL BE REPAIRED WITH CONCRETE RESTORATION MORTAR AS SPECIFIED IN SPECIFICATION SECTION 03 01 30.71 CONCRETE REHABILITATION.

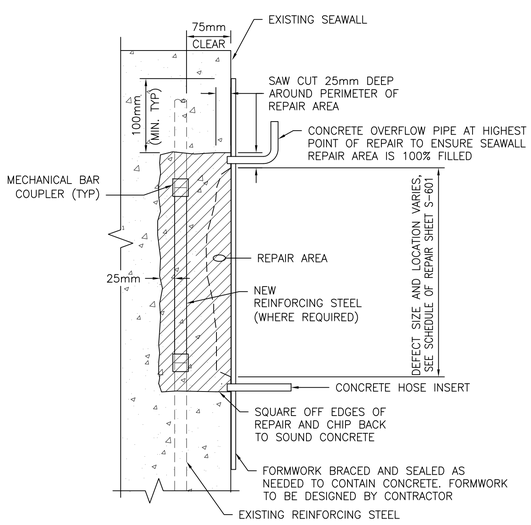


## REPAIR TYPE B DETAIL

SCALE 1:5 S-101 B1

**ABOVE WATER PARTIAL DEPTH SPALL REPAIR 75mm AND GREATER WITH EXPOSED REINFORCING STEEL FOR VERTICAL SURFACES USING FORM AND PUMP METHODS**

1. PROVIDE SCAFFOLDING AS NECESSARY TO ACCESS THE WORK AREA.
2. CHIP OUT AND REMOVE ALL LOOSE CONCRETE FROM DAMAGED AREA.
3. SQUARE OFF LIMITS OF REPAIR AREA A MINIMUM OF 25mm DEEP BY SAW CUTTING. CHIP BACK TO SOUND CONCRETE. CONTRACTOR SHALL VERIFY DEPTH TO REINFORCING PRIOR TO CUTTING.
4. WHERE STEEL REINFORCING IS EXPOSED, CHIP BACK BEHIND REINFORCING STEEL A MINIMUM OF 25mm. CLEAN ALL EXPOSED REINFORCING STEEL TO SA2. REFER TO SPECIFICATION SECTION 03 01 30.71 CONCRETE REHABILITATION FOR REPLACEMENT OF CORRODED REINFORCING STEEL USING MECHANICAL SPLICES.
5. PRESENT PREPARED REPAIR AREA TO THE CONTRACTING OFFICER FOR APPROVAL.
6. ONCE REPAIR AREA PREPARATION IS APPROVED BY THE CONTRACTING OFFICER, FILL WITH CONCRETE RESTORATION MORTAR. RESTORE AND RECONSTRUCT THE ORIGINAL DIMENSIONS OF THE STRUCTURAL ELEMENT BEING REPAIRED. FOLLOW MANUFACTURER'S RECOMMENDATION FOR FORM AND PUMP PLACEMENT.
7. LEAVE FORMS IN PLACE FOR A MINIMUM OF 7 DAYS.

**SCHEDULE OF MATERIALS**

1. SPALLED CONCRETE AREAS SHALL BE REPAIRED WITH CONCRETE RESTORATION MORTAR AS SPECIFIED IN SPECIFICATION SECTION 03 01 30.71 CONCRETE REHABILITATION.
2. ALL REINFORCING STEEL SHALL HAVE A MINIMUM Fy = 410 mPa.

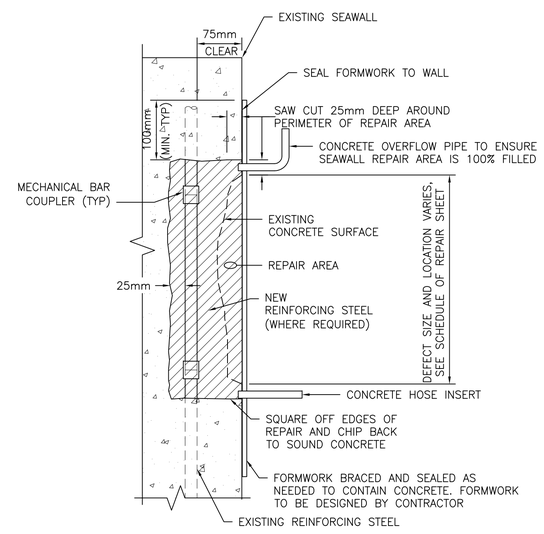


## REPAIR TYPE C DETAIL

SCALE 1:5 S-102 B4

**UNDERWATER PARTIAL DEPTH SPALL REPAIR 75mm AND GREATER WITH EXPOSED REINFORCING STEEL USING FORM AND PUMP METHODS**

1. CHIP OUT AND REMOVE ALL LOOSE CONCRETE AMD MARINE GROWTH FROM DAMAGED AREA.
2. SQUARE OFF LIMITS OF REPAIR AREA A MINIMUM OF 25mm DEEP BY SAW CUTTING OR CHIPPING. CHIP BACK TO SOUND CONCRETE. CONTRACTOR SHALL VERIFY DEPTH TO REINFORCING BAR PRIOR TO CUTTING.
3. WHERE STEEL REINFORCING IS EXPOSED, CHIP BACK BELOW REINFORCING STEEL A MINIMUM OF 25mm. CLEAN ALL EXPOSED REINFORCING STEEL TO SA2. REFER TO SPECIFICATION SECTION 03 01 30.71 CONCRETE REHABILITATION FOR REPLACEMENT OF CORRODED REINFORCING STEEL USING MECHANICAL SPLICES.
4. PRESENT PREPARED REPAIR AREA TO THE CONTRACTING OFFICER.
5. SECURE FORMS IN PLACE TO PREVENT CONCRETE FROM LEAKING OUT OF FORMS.
6. PRESENT FORMWORK TO THE CONTRACTING OFFICER FOR APPROVAL.
7. ONCE REPAIR AREA PREPARATION AND FORMWORK IS APPROVED BY THE CONTRACTING OFFICER, FILL WITH CONCRETE RESTORATION MORTAR. RESTORE AND RECONSTRUCT THE ORIGINAL DIMENSIONS OF THE STRUCTURAL ELEMENT BEING REPAIRED. FOLLOW MANUFACTURER'S RECOMMENDATION FOR FORM AND PUMP PLACEMENT.
8. LEAVE FORMS IN PLACE FOR A MINIMUM OF 7 DAYS.

**SCHEDULE OF MATERIALS**

1. SPALLED CONCRETE AREAS SHALL BE REPAIRED WITH CONCRETE RESTORATION MORTAR AS SPECIFIED IN SPECIFICATION SECTION 03 01 30.71 CONCRETE REHABILITATION.
2. ALL REINFORCING STEEL SHALL HAVE A MINIMUM Fy = 410 mPa.

**NOTE:**

LOCATION OF DEFECT/REPAIR IS IDENTIFIED USING THE STATIONING ALONG THE EDGE OF THE STRUCTURE WITH VERTICAL AND HORIZONTAL OFFSETS INDICATING THE RELEVANT DISTANCE FROM THAT EDGE TO THE CENTER OF THE DEFECT/REPAIR

0 100 200 500 mm

GRAPHIC SCALE: 1:5

| SYM | DESCRIPTION | DATE | APPR |
|---|---|---|---|

NAVFAC

COMMONWEALTH OF MASSACHUSETTS CHARLES MARSHALL ROBERTS CIVIL No. 50339 REGISTERED PROFESSIONAL ENGINEER
3/12/14
SEAL

CHILDS ENGINEERING CORPORATION
34 WILLIAM WAY BELLINGHAM, MASSACHUSETTS 02019 U.S.A.
Phone: (508) 966-9092
Fax: (508) 966-9096
E-mail: mail@childseng.com
A/E INFO

APPROVED
FOR COMMANDER NAVFAC
ACTIVITY
SATISFACTORY TO DATE
DES CMR DRW TEQ CHK CDS
BRANCH MANAGER
CHIEF ENG/ARCH

DEPARTMENT OF THE NAVY
NAVAL FACILITIES ENGINEERING COMMAND
NAVAL FACILITIES ENGINEERING COMMAND
FISC, AKASAKI TERMINAL
SASEBO, JAPAN

# REPAIRS TO FUELING PIER 170

REPAIR TYPE A–C DETAILS

SCALE: AS NOTED
EPROJECT NO.:
CONSTR. CONTR. NO.
NAVFAC DRAWING NO. 10006563
SHEET 15 OF 26

S-501

DRAWFORM REVISION: 10 MARCH 2009

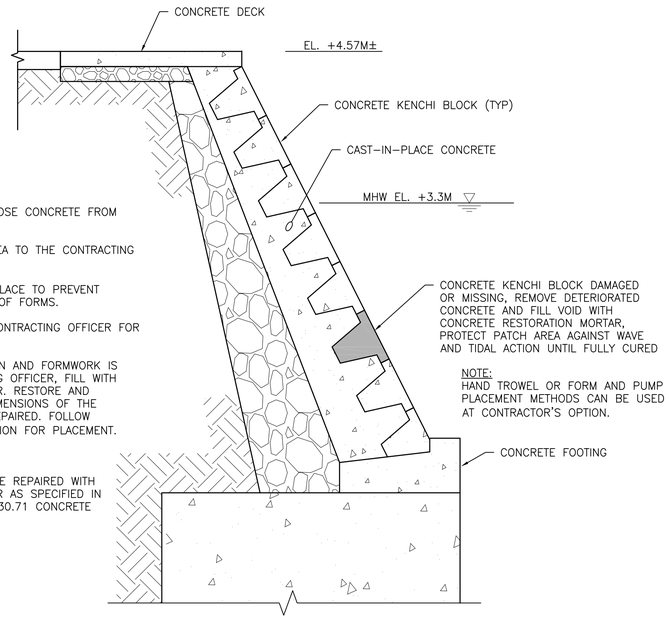


**KENCHI BLOCK REPAIR**

1. CHIP OUT AND REMOVE ALL LOOSE CONCRETE FROM DAMAGED AREA.
2. PRESENT PREPARED REPAIR AREA TO THE CONTRACTING OFFICER.
3. SECURE FORMS (IF USED) IN PLACE TO PREVENT CONCRETE FROM LEAKING OUT OF FORMS.
4. PRESENT FORMWORK TO THE CONTRACTING OFFICER FOR APPROVAL.
5. ONCE REPAIR AREA PREPARATION AND FORMWORK IS APPROVED BY THE CONTRACTING OFFICER, FILL WITH CONCRETE RESTORATION MORTAR. RESTORE AND RECONSTRUCT THE ORIGINAL DIMENSIONS OF THE STRUCTURAL ELEMENT BEING REPAIRED. FOLLOW MANUFACTURER'S RECOMMENDATION FOR PLACEMENT.

**SCHEDULE OF MATERIALS**

1. MISSING BLOCK AREAS SHALL BE REPAIRED WITH CONCRETE RESTORATION MORTAR AS SPECIFIED IN SPECIFICATION SECTION 03 01 30.71 CONCRETE REHABILITATION.

## REPAIR TYPE D DETAIL (C1)

SCALE 1:25 S-101

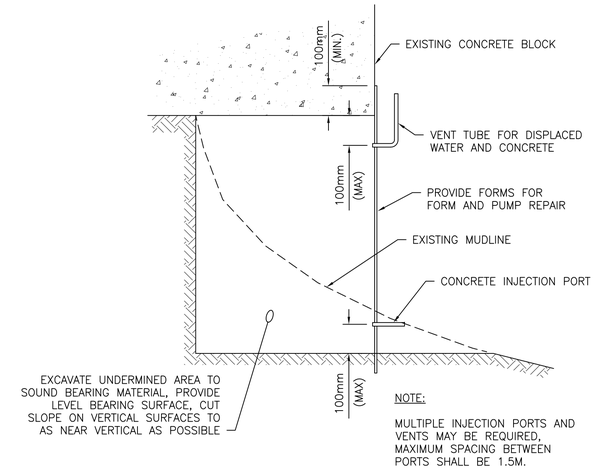


**UNDERMINING OF SEAWALL**

1. CHIP OUT AND REMOVE ALL LOOSE MATERIAL/DEBRIS FROM UNDERMINED AREA. EXCAVATE SEDIMENT AND LOOSE DEBRIS TO LINES SHOWN.
2. PRESENT PREPARED REPAIR AREA TO THE CONTRACTING OFFICER.
3. SECURE FORMWORK IN PLACE. BRACE AS REQUIRED TO RESIST PRESSURE FROM CONCRETE.
4. PRESENT FORMWORK TO THE CONTRACTING OFFICER FOR APPROVAL.
5. ONCE REPAIR PREPARATION AND FORMWORK IS APPROVED BY THE CONTRACTING OFFICER, INJECT WITH CONCRETE RESTORATION MORTAR. INJECT MORTAR THROUGH PORT(S) AT BOTTOM OF FORM STARTING AT ONE END OF REPAIR AREA AND ADVANCING TO THE OTHER END OF REPAIR AREA. PUMP MORTAR INTO FORMS UNTIL ALL WATER IS DISPLACED AND FRESH MORTAR IS PUMPED OUT OF VENT TUBES.

**SCHEDULE OF MATERIALS**

1. UNDERMINED AREAS SHALL BE REPAIRED WITH CONCRETE RESTORATION MORTAR AS SPECIFIED IN SPECIFICATION SECTION 03 01 30.71 CONCRETE REHABILITATION.

## REPAIR TYPE E DETAIL (C4)

SCALE 1:10 S-101

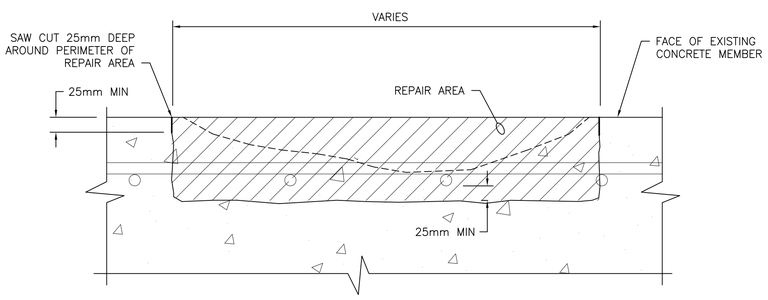


## REPAIR TYPE F DETAIL (B1)

SCALE 1:5 S-104 TO S-106

**PARTIAL DEPTH DECK SPALL REPAIR 0mm TO 150mm DEEP USING POUR AND TROWEL METHODS**

1. CHIP OUT AND REMOVE ALL LOOSE CONCRETE FROM DAMAGED AREA.
2. SQUARE OFF LIMITS OF REPAIR AREA A MINIMUM OF 25mm DEEP BY SAW CUTTING OR CHIPPING. CHIP BACK TO SOUND CONCRETE.
3. WHERE STEEL REINFORCING IS EXPOSED, CHIP BACK BELOW REINFORCING STEEL A MINIMUM OF 25mm. CLEAN EXPOSED REINFORCING STEEL TO SA2. REFER TO SPECIFICATION SECTION 03 01 30.71 CONCRETE REHABILITATION FOR REPLACEMENT OF CORRODED REINFORCING STEEL.
4. PRESENT PREPARED REPAIR AREA TO THE CONTRACTING OFFICER FOR APPROVAL.
5. ONCE REPAIR AREA PREPARATION IS APPROVED BY THE CONTRACTING OFFICER, FILL WITH CONCRETE RESTORATION MORTAR. RESTORE AND RECONSTRUCT THE ORIGINAL DIMENSIONS OF THE STRUCTURAL ELEMENT BEING REPAIRED. FOLLOW MANUFACTURER'S RECOMMENDATION FOR PLACEMENT.
6. LEAVE FORMS IN PLACE FOR A MINIMUM OF 7 DAYS.

**SCHEDULE OF MATERIALS**

1. SPALLED CONCRETE AREAS SHALL BE REPAIRED WITH CONCRETE RESTORATION MORTAR AS SPECIFIED IN SPECIFICATION SECTION 03 01 30.71 CONCRETE REHABILITATION.
2. ALL REINFORCING STEEL SHALL HAVE A MINIMUM F = 410 mPa.

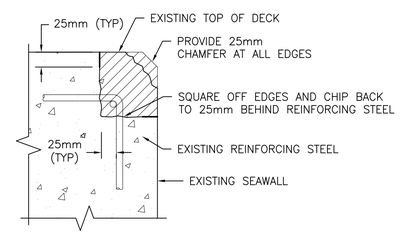


## REPAIR TYPE G DETAIL (B4)

SCALE 1:5 S-101 TO S-106

**EDGE SPALL/ABRASION REPAIR USING FORM AND POUR METHODS**

1. PROVIDE SCAFFOLDING AS NECESSARY TO ACCESS WORK AREA.
2. SQUARE OFF LIMITS OF REPAIR AREA A MINIMUM OF 25mm DEEP BY SAW CUTTING. CHIP BACK TO SOUND CONCRETE.
3. WHERE STEEL REINFORCING IS EXPOSED, CHIP BACK BELOW REINFORCING STEEL A MINIMUM OF 25mm. CLEAN EXPOSED REINFORCING STEEL TO SA2. REFER TO SPECIFICATIONS SECTION 03 01 30.71 CONCRETE REHABILITATION FOR REPLACEMENT OF CORRODED REINFORCING STEEL.
4. PRESENT PREPARED REPAIR AREA TO THE CONTRACTING OFFICER FOR APPROVAL.
5. ONCE REPAIR AREA PREPARATION IS APPROVED BY THE CONTRACTING OFFICER, FORM AND FILL WITH CONCRETE RESTORATION MORTAR. RESTORE AND RECONSTRUCT THE ORIGINAL DIMENSIONS OF THE STRUCTURAL ELEMENT BEING REPAIRED. FOLLOW MANUFACTURER'S RECOMMENDATION FOR PLACEMENT.
6. LEAVE FORMS IN PLACE FOR A MINIMUM OF 7 DAYS.

**SCHEDULE OF MATERIALS**

1. SPALLED CONCRETE AREAS SHALL BE REPAIRED WITH CONCRETE RESTORATION MORTAR AS SPECIFIED IN SPECIFICATION SECTION 03 01 30.71 CONCRETE REHABILITATION.
2. ALL REINFORCING STEEL SHALL HAVE A MINIMUM Fy = 410 mPa.

**NOTE:**

LOCATION OF DEFECT/REPAIR IS IDENTIFIED USING THE STATIONING ALONG THE EDGE OF THE STRUCTURE WITH VERTICAL AND HORIZONTAL OFFSETS INDICATING THE RELEVANT DISTANCE FROM THAT EDGE TO THE CENTER OF THE DEFECT/REPAIR

0 0.25 0.5 1.0 m
GRAPHIC SCALE: 1:10

0 0.5 1.0 2.5 m
GRAPHIC SCALE: 1:25

0 100 200 500 mm
GRAPHIC SCALE: 1:5

| SYM | DESCRIPTION | DATE | APPR |
|---|---|---|---|

NAVFAC

COMMONWEALTH OF MASSACHUSETTS — CHARLES MARSHALL ROBERTS — CIVIL — No. 50339 — REGISTERED PROFESSIONAL ENGINEER
3/12/14
SEAL

CHILDS ENGINEERING CORPORATION
34 WILLIAM WAY BELLINGHAM, MASSACHUSETTS 02019 U.S.A.
Phone: (508) 966-9092
Fax: (508) 966-9096
E-mail: mail@childseng.com
A/E INFO

APPROVED
FOR COMMANDER NAVFAC
ACTIVITY
SATISFACTORY TO DATE
DES CMR DRW TEQ CHK CDS
BRANCH MANAGER
CHIEF ENG/ARCH

DEPARTMENT OF THE NAVY
NAVAL FACILITIES ENGINEERING COMMAND
NAVAL FACILITIES ENGINEERING COMMAND
FISC, AKASAKI TERMINAL
SASEBO, JAPAN
REPAIRS TO FUELING PIER 170
REPAIR TYPE D-G DETAILS

SCALE: AS NOTED
EPROJECT NO.:
CONSTR. CONTR. NO.
NAVFAC DRAWING NO. 10006564
SHEET 16 OF 26
S-502

DRAWFORM REVISION: 10 MARCH 2009

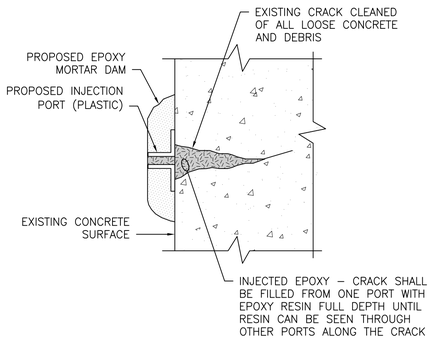


## REPAIR TYPE H DETAIL (C1)

SCALE 1:5 S-103

**EPOXY CRACK REPAIR BY PRESSURE INJECTION**

1. PROVIDE SCAFFOLDING AS NECESSARY TO ACCESS THE WORK AREA.
2. CLEAN SURFACE OF ALL CONCRETE DUST, LOOSE CONCRETE, GREASE. OIL AND OTHER MATERIAL THAT WILL EFFECT THE BOND OF THE EPOXY MORTAR DAM.
3. SET APPROPRIATE INJECTION PORTS OVER CRACK AS RECOMMENDED BY THE EPOXY INJECTION SYSTEM MANUFACTURER WITH EPOXY MORTAR DAM.
4. PRESENT PREPARED REPAIR AREA TO THE CONTRACTING OFFICER FOR APPROVAL.
5. SEAL CRACKS AND PORTS WITH EPOXY MORTAR. TAKE CARE TO ENSURE THAT THE PORTS PROVIDE A CLEAN PATH FOR INJECTING EPOXY RESIN INTO THE CRACK.
6. USING AUTOMATED MIXING SYSTEM AND INJECTING EQUIPMENT INJECT EPOXY RESIN INTO CRACKS THROUGH PORTS. START AT ONE END OF CRACK (LOWER END) AND INJECT EPOXY RESIN INTO PORT UNTIL RESIN APPEARS AT THE NEXT PORT. PLUG PORT WHERE EPOXY RESIN IS BEING INJECTED AND MOVE NOZZLE TO PORT WHERE EPOXY RESIN HAS APPEARED. CONTINUE PUMPING REPEATING PROCEDURE UNTIL ALL THE PORTS AND CRACK HAS BEEN FILLED COMPLETELY WITH EPOXY RESIN.

**SCHEDULE OF MATERIALS**

1. CRACKS SHALL BE REPAIRED WITH EPOXY RESIN AS SPECIFIED IN SPECIFICATION SECTION 03 01 30.71 CONCRETE REHABILITATION.

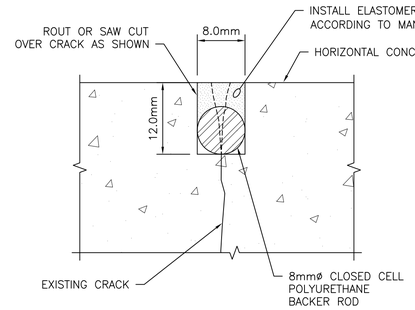


## REPAIR TYPE J DETAIL (C4)

SCALE 1:0.5 S-101 TO S-106

**CRACK REPAIR WITH ELASTOMERIC SEALANT**

1. CLEAN REPAIR AREA TO REMOVE DEBRIS, ENSURE THAT THE CRACKS ARE NOT CONTAMINATED WITH ANY BOND INHIBITING MATERIALS SUCH AS OIL AND GREASE. ROUT OR SAW CUT OVER CRACK TO PREPARE SURFACE FOR SEALANT.
2. PRESENT REPAIR AREA TO THE CONTRACTING OFFICER FOR APPROVAL.
3. INSERT BACKER ROD OR BOND BREAKER TAPE INTO BOTTOM OF GROOVE.
4. INSERT SEALANT INTO GROOVE OVER BOND BREAKER.
5. PROTECT JOINT UNTIL SEALANT HAS CURED.

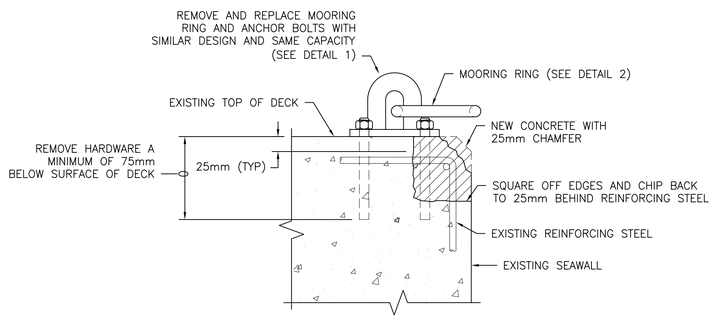

## REPAIR TYPE K DETAIL (B2)

SCALE 1:5 S-102

**MOORING RING SPALL REPAIR**

1. PROVIDE SCAFFOLDING AS NECESSARY TO ACCESS WORK AREA.
2. REMOVE EXISTING MOORING RING AND ASSOCIATED HARDWARE. ALL HARDWARE MUST BE REMOVED A MINIMUM OF 75mm BELOW SURFACE OF DECK.
3. SQUARE OFF LIMITS OF REPAIR AREA A MINIMUM OF 25mm DEEP BY SAW CUTTING. CHIP BACK TO SOUND CONCRETE. CONTRACTOR SHALL VERIFY DEPTH TO REINFORCING PRIOR TO CUTTING.
4. WHERE STEEL REINFORCING IS EXPOSED, CHIP BACK BELOW REINFORCING STEEL A MINIMUM OF 25mm. CLEAN EXPOSED REINFORCING STEEL TO SA2. REFER TO SPECIFICATIONS SECTION 03 01 30.71 CONCRETE REHABILITATION FOR REPLACEMENT FOR CORRODED REINFORCING STEEL.
5. PRESENT PREPARED REPAIR AREA TO THE CONTRACTING OFFICER FOR APPROVAL.
6. ONCE REPAIR AREA PREPARATION IS APPROVED BY THE CONTRACTING OFFICER, FORM AND FILL WITH CONCRETE RESTORATION MORTAR. RESTORE AND RECONSTRUCT THE ORIGINAL DIMENSIONS OF THE STRUCTURAL ELEMENT BEING REPAIRED. FOLLOW MANUFACTURER'S RECOMMENDATION FOR PLACEMENT.
7. INSTALL NEW MOORING RING OF SIMILAR DESIGN AND WITH SAME CAPACITY, AT OR AS CLOSE TO ORIGINAL LOCATION AS POSSIBLE WITHOUT COMPROMISING CAPACITY.

**SCHEDULE OF MATERIALS**

1. SPALLED CONCRETE AREAS SHALL BE REPAIRED WITH CONCRETE RESTORATION MORTAR AS SPECIFIED IN SPECIFICATION SECTION 03 01 30.71 CONCRETE REHABILITATION.
2. ALL REINFORCING STEEL SHALL HAVE A MINIMUM Fy = 410 mPa.

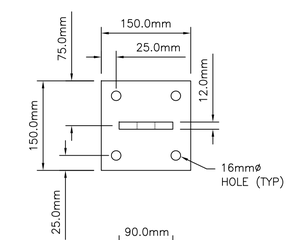


## DETAIL 1 (B4)

SCALE 1:5 S-503

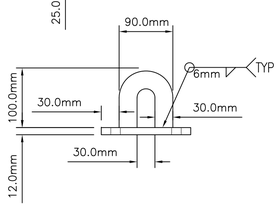


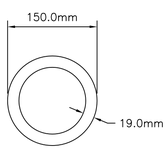


## DETAIL 2 (B4)

SCALE 1:5 S-503

**NOTE:**

LOCATION OF DEFECT/REPAIR IS IDENTIFIED USING THE STATIONING ALONG THE EDGE OF THE STRUCTURE WITH VERTICAL AND HORIZONTAL OFFSETS INDICATING THE RELEVANT DISTANCE FROM THAT EDGE TO THE CENTER OF THE DEFECT/REPAIR

0 10 20 40 mm

GRAPHIC SCALE: 1:0.5

0 100 200 500 mm

GRAPHIC SCALE: 1:5

| SYM | DESCRIPTION | DATE | APPR |
|---|---|---|---|

NAVFAC

COMMONWEALTH OF MASSACHUSETTS — CHARLES MARSHALL ROBERTS — CIVIL — No. 50339 — REGISTERED PROFESSIONAL ENGINEER

3/12/14

SEAL


CHILDS ENGINEERING CORPORATION
34 WILLIAM WAY BELLINGHAM, MASSACHUSETTS 02019 U.S.A.
Phone: (508) 966-9092
Fax: (508) 966-9096
E-mail: mail@childseng.com
A/E INFO


APPROVED

FOR COMMANDER NAVFAC

ACTIVITY

SATISFACTORY TO DATE

DES CMR DRW TEQ CHK CDS

<<PM/DM>>

BRANCH MANAGER

CHIEF ENG/ARCH

<<XXX>>

DEPARTMENT OF THE NAVY
NAVAL FACILITIES ENGINEERING COMMAND
NAVAL FACILITIES ENGINEERING COMMAND
FISC, AKASAKI TERMINAL
SASEBO, JAPAN

# REPAIRS TO FUELING PIER 170

REPAIR TYPE H-K DETAILS

SCALE: AS NOTED

EPROJECT NO.:

CONSTR. CONTR. NO.

NAVFAC DRAWING NO. 10006565

SHEET 17 OF 26

S-503

DRAWFORM REVISION: 10 MARCH 2009

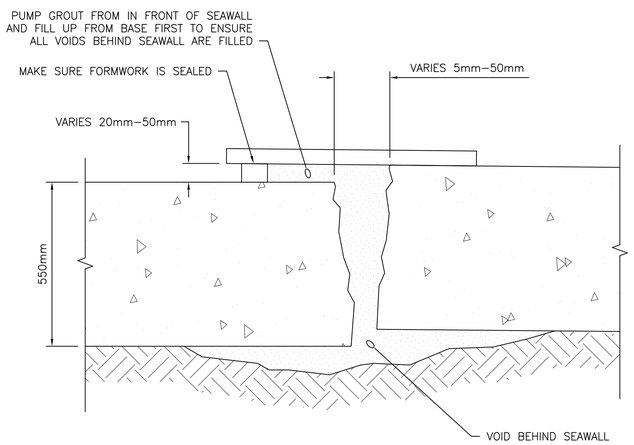


PLAN

## REPAIR TYPE L DETAIL

SCALE 1:10 S–103 C2

**SEPARATION IN SEAWALL**

1. PROVIDE SCAFFOLDING AS NECESSARY TO ACCESS THE WORK AREA.
2. REMOVE ALL LOOSE CONCRETE AND DEBRIS FROM CRACK, REFER TO SPECIFICATION SECTION 03 01 30.71 CONCRETE REHABILITATION.
3. PRESENT PREPARED REPAIR AREA TO THE CONTRACTING OFFICER FOR APPROVAL.
4. SECURE FORMS IN PLACE AS SHOWN. FORM SHALL BE SEALED TIGHT AGAINST CONCRETE TO PREVENT LEAKAGE OF MORTAR.
5. PRESENT FORMWORK TO THE CONTRACTING OFFICER FOR APPROVAL.
6. ONCE REPAIR AREA PREPARATION AND FORMWORK IS APPROVED BY THE CONTRACTING OFFICER, FILL WITH FORM AND PUMP CONCRETE RESTORATION MORTAR FROM THE BASE OF THE CRACK TO ALLOW THE CONCRETE TO FILL THE CRACK AND FLOW BEHIND THE SEAWALL TO FILL ANY VOIDS. FORM AND PUMP MORTAR SHALL NOT BE EXTENDED WITH COURSE AGGREGATE. DO NOT EXCEED 100kpa GROUT PRESSURE WITH PUMP.
7. CURE RESTORATION MORTAR ACCORDING TO MANUFACTURER'S RECOMMENDATIONS.

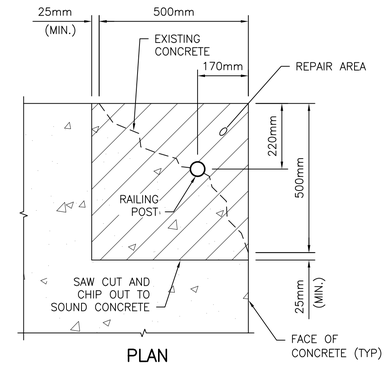


PLAN

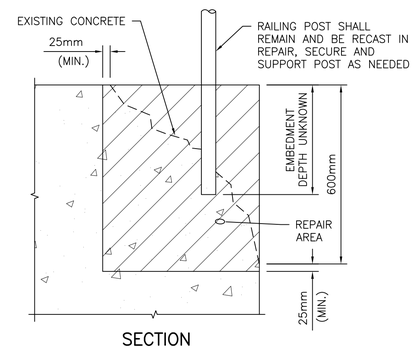


SECTION

**RAILING CORNER SPALL REPAIR**

1. PROVIDE SCAFFOLDING AS NECESSARY TO ACCESS THE WORK AREA.
2. CHIP OUT AND REMOVE ALL LOOSE CONCRETE FROM DAMAGED AREA AND AROUND RAILING.
3. SQUARE OFF LIMITS OF REPAIR AREA A MINIMUM OF 25mm DEEP BY SAW CUTTING. CHIP BACK TO SOUND CONCRETE.
4. WHERE STEEL REINFORCING IS EXPOSED, CHIP BACK BELOW REINFORCING STEEL A MINIMUM OF 25mm. CLEAN ALL EXPOSED REINFORCING STEEL TO SA2. REFER TO SPECIFICATION SECTION 03 01 30.71 CONCRETE REHABILITATION FOR REPLACEMENT OF CORRODED REINFORCING STEEL.
5. PRESENT PREPARED REPAIR AREA TO THE CONTRACTING OFFICER FOR APPROVAL.
6. SECURE FORMS IN PLACE TO RESTORE AND RECONSTRUCT THE ORIGINAL DIMENSIONS OF THE CORNER.
7. PRESENT FORMS TO THE CONTRACTING OFFICER FOR APPROVAL.
8. ONCE FORMS ARE APPROVED BY THE CONTRACTING OFFICER, FILL WITH CONCRETE RESTORATION MORTAR. FOLLOW MANUFACTURER'S RECOMMENDATION FOR PLACEMENT.

SCHEDULE OF MATERIALS

1. SPALLED CONCRETE AREAS SHALL BE REPAIRED WITH CONCRETE RESTORATION MORTAR AS SPECIFIED IN SPECIFICATION SECTION 03 01 30.71 CONCRETE REHABILITATION.
2. ALL REINFORCING STEEL SHALL HAVE A MINIMUM Fy = 410 mPa.

## REPAIR TYPE M DETAIL

SCALE 1:10 S–103 B4

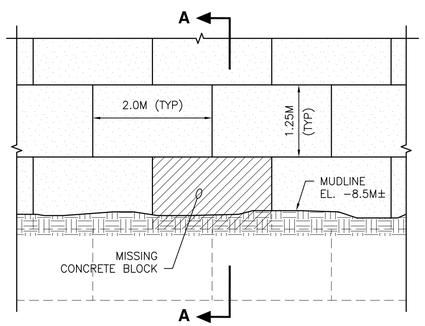


ELEVATION

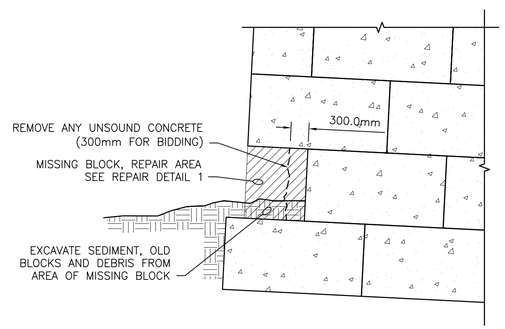


SECTION A–A

**REPAIR LARGE UNDERWATER VOID**

1. EXCAVATE SEDIMENT AND DEBRIS TO EXPOSE LOWER COURSE OF BLOCKS.
2. CHIP OUT AND REMOVE ALL UNSOUND CONCRETE FROM DAMAGED BLOCK.
3. PRESENT PREPARED REPAIR AREA TO THE CONTRACTING OFFICER.
4. SECURE FORMS IN PLACE AND SEAL TO PREVENT CONCRETE FROM LEAKING OUT OF FORMS. BRACE AS NEEDED TO RETAIN PUMPED CONCRETE RESTORATION MORTAR.
5. PRESENT FORMWORK TO THE CONTRACTING OFFICER FOR APPROVAL.
6. ONCE REPAIR AREA PREPARATION AND FORMWORK IS APPROVED BY THE CONTRACTING OFFICER, FILL WITH CONCRETE RESTORATION MORTAR EXTENDED WITH 10mm AGGREGATE. USE FORM AND PUMP TECHNIQUES FOR PLACEMENT.
7. REMOVE FORMS ONCE CONCRETE HAS CURED.
8. SEAL ANY GAPS OR SPACES BETWEEN BLOCKS LARGER THAN 12mm TO PREVENT LOSS OF CONCRETE RESTORATION MORTAR.

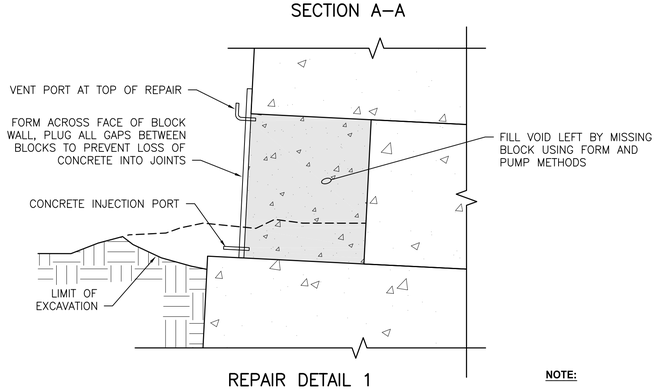


REPAIR DETAIL 1

N.T.S.

## REPAIR TYPE N DETAIL

SCALE 1:50 S–103 A2

**NOTE:**

LOCATION OF DEFECT/REPAIR IS IDENTIFIED USING THE STATIONING ALONG THE EDGE OF THE STRUCTURE WITH VERTICAL AND HORIZONTAL OFFSETS INDICATING THE RELEVANT DISTANCE FROM THAT EDGE TO THE CENTER OF THE DEFECT/REPAIR

0 250 500 1000 mm

GRAPHIC SCALE: 1:10

| SYM | DESCRIPTION | DATE | APPR |
|---|---|---|---|

NAVFAC

COMMONWEALTH OF MASSACHUSETTS CHARLES MARSHALL ROBERTS CIVIL No. 50339 REGISTERED PROFESSIONAL ENGINEER 3/12/14 SEAL

CHILDS ENGINEERING CORPORATION
34 WILLIAM WAY BELLINGHAM, MASSACHUSETTS 02019 U.S.A.
Phone: (508) 966–9092
Fax: (508) 966–9096
E–mail: mail@childseng.com
A/E INFO

APPROVED
FOR COMMANDER NAVFAC
ACTIVITY
SATISFACTORY TO DATE
DES CMR DRW TEQ CHK CDS
<<PM/DM>>
BRANCH MANAGER
CHIEF ENG/ARCH
<<XXX>>

DEPARTMENT OF THE NAVY
NAVAL FACILITIES ENGINEERING COMMAND
NAVAL FACILITIES ENGINEERING COMMAND
FISC, AKASAKI TERMINAL
SASEBO, JAPAN
REPAIRS TO FUELING PIER 170
REPAIR TYPE L–N DETAILS

SCALE: AS NOTED
EPROJECT NO.:
CONSTR. CONTR. NO.
NAVFAC DRAWING NO. 10006566
SHEET 18 OF 26
S-504

DRAWFORM REVISION: 10 MARCH 2009

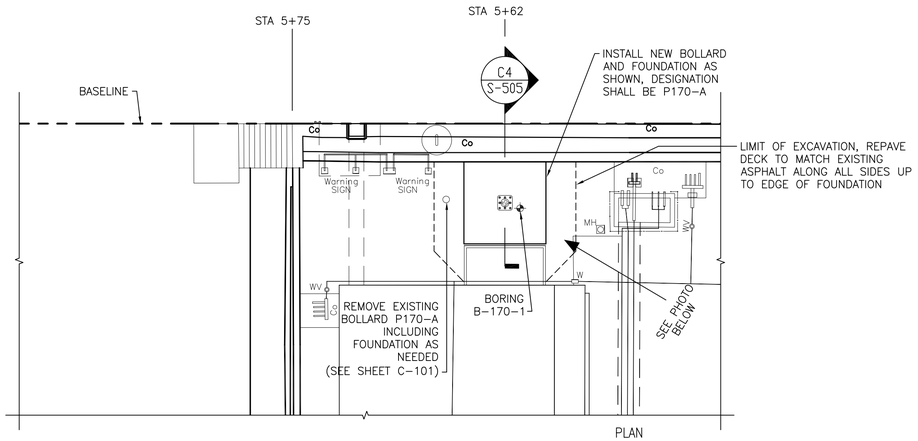


PLAN NORTH

## BOLLARD P-107-A REPLACEMENT PLAN

SCALE: 1:200 C-101 S-107

0 4 10 20 M

GRAPHIC SCALE: 1:200

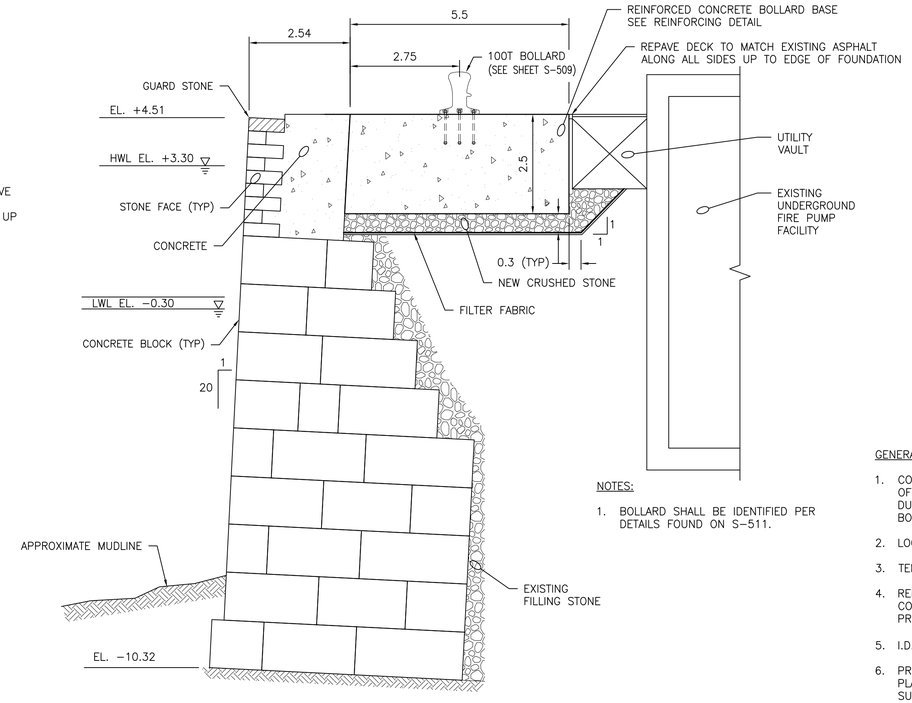


NOTES:

1. BOLLARD SHALL BE IDENTIFIED PER DETAILS FOUND ON S-511.

## BOLLARD P-170-A REPLACEMENT SECTION

SCALE: 1:75 S-505 C4

0 2.0 4.0 8.0 m

GRAPHIC SCALE: 1:75

GENERAL NOTES:

1. CONTRACTOR SHALL PROVIDE SHORING TO PREVENT LOSS OF SUPPORT TO UTILITIES AND ADJACENT STRUCTURES DURING ANY EXCAVATION AND CONSTRUCTION OF THE BOLLARD.
2. LOCATE AND PROTECT 400mm FIRE LINE
3. TEMPORARILY RELOCATE THEN REPLACE BILGE PUMP LINE.
4. REMOVE UNKNOWN 400mm LINE, CONFIRM WITH CONTRACTING OFFICER THAT THE LINE IS ABANDONED PRIOR TO REMOVAL.
5. I.D./LOCATE ALL PIPES PRIOR TO EXCAVATION.
6. PREPARE PLAN OF EXISTING UTILITIES AND EXCAVATION PLAN PRIOR TO EXCAVATION FOR BOLLARD FOUNDATION, SUBMIT TO CONTRACTING OFFICER FOR APPROVAL.
7. CONTRACTOR SHALL CONDUCT EXPLORATORY EXCAVATIONS IN THE AREA OF THE BOLLARD FOUNDATION TO DETERMINE THE LOCATION, SIZE AND TYPE OF PIPES AND/OR ELECTRICAL CONDUITS THAT MAY INTERFERE WITH THE EXCAVATION.
8. UTILITIES SHOWN ON PLAN ARE APPROXIMATE.

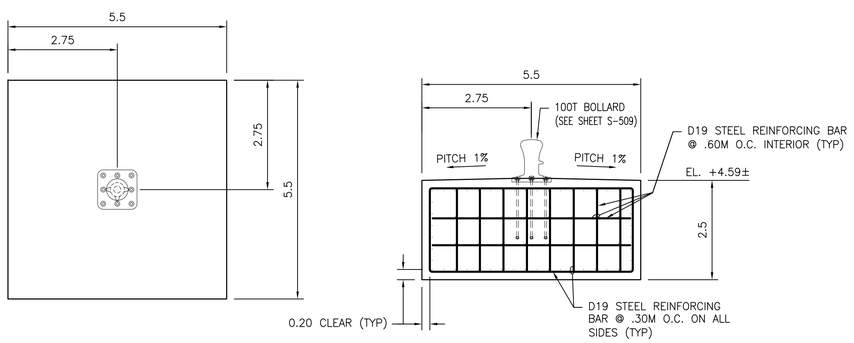


## BOLLARD P170-A REINFORCING

SCALE: 1:75 S-505 A2

0 2.0 4.0 8.0 m

GRAPHIC SCALE: 1:75

NOTES:

1. MOUNTING HARDWARE BOLTS SHALL BE 750MM LONG M48 OF ASTM F1554 GRADE ISO STEEL, NUTS SHALL BE ASTM A563 GRADE DH STEEL, WASHERS SHALL BE ASTM F436 AND PLATE WASHERS SHALL BE ASTM A36 STEEL.
2. REINFORCING STEEL SHALL BE Fy410 mPa.
3. ALL REINFORCING STEEL SHALL BE EPOXY COATED AND CONFORM TO ASTM A775/A775M.

| SYM | DESCRIPTION | DATE | APPR |
|---|---|---|---|

NAVFAC

COMMONWEALTH OF MASSACHUSETTS CHARLES MARSHALL ROBERTS CIVIL No. 50339 REGISTERED PROFESSIONAL ENGINEER

3/12/14

SEAL

CHILDS ENGINEERING CORPORATION
34 WILLIAM WAY BELLINGHAM, MASSACHUSETTS 02019 U.S.A.
Phone: (508) 966-9092
Fax: (508) 966-9096
E-mail: mail@childseng.com
A/E INFO

APPROVED

FOR COMMANDER NAVFAC

ACTIVITY

SATISFACTORY TO DATE

DES CMR DRW TEQ CHK CDS

BRANCH MANAGER

CHIEF ENG/ARCH

DEPARTMENT OF THE NAVY
NAVAL FACILITIES ENGINEERING COMMAND
NAVAL FACILITIES ENGINEERING COMMAND
FISC, AKASAKI TERMINAL
SASEBO, JAPAN
REPAIRS TO FUELING PIER 170
BOLLARD P170-A REPLACEMENT DETAILS

SCALE: AS NOTED

EPROJECT NO.:

CONSTR. CONTR. NO.

NAVFAC DRAWING NO.
10006567

SHEET 19 OF 26

S-505

DRAWFORM REVISION: 10 MARCH 2009

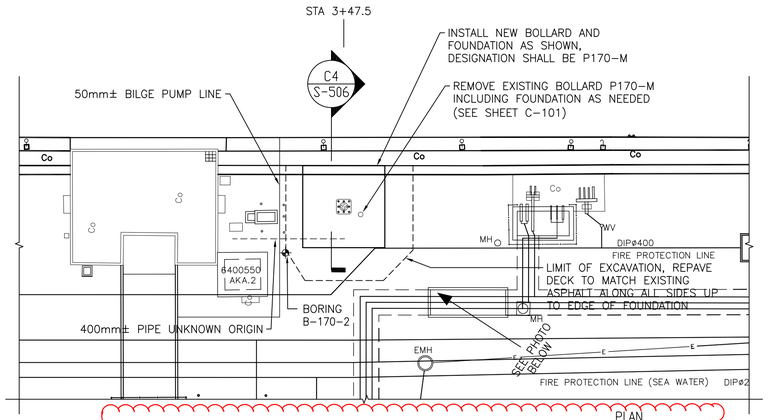


BID OPTION ITEM 002 / CLIN 0007

## BOLLARD P170-M REPLACEMENT PLAN

SCALE: 1:200 C-101 S-107

0 4 10 20 M

GRAPHIC SCALE: 1:200

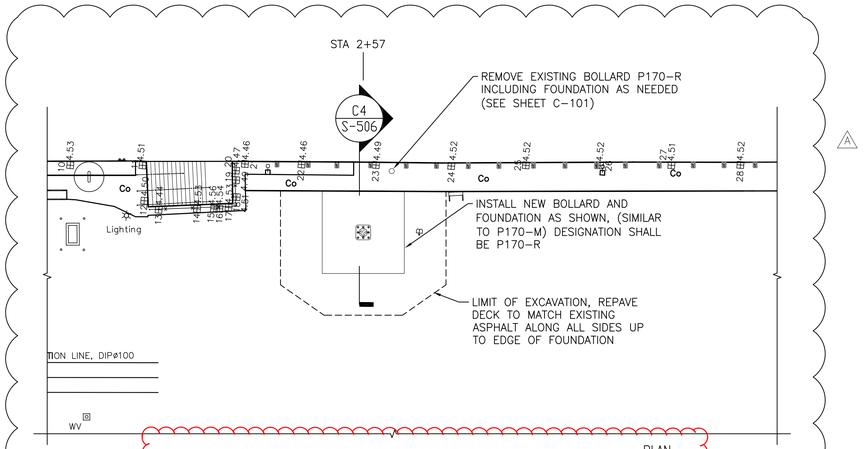


BID OPTION ITEM 003 / CLIN 0008

## BOLLARD P170-R REPLACEMENT PLAN

SCALE: 1:200 C-101 S-103

0 4 10 20 M

GRAPHIC SCALE: 1:200

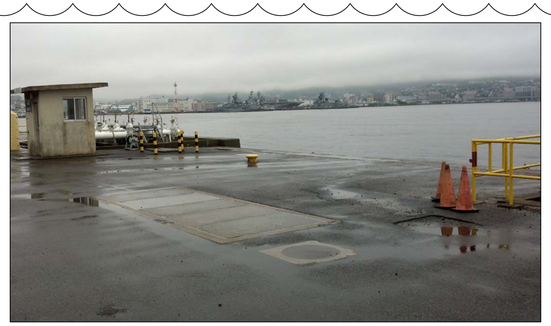

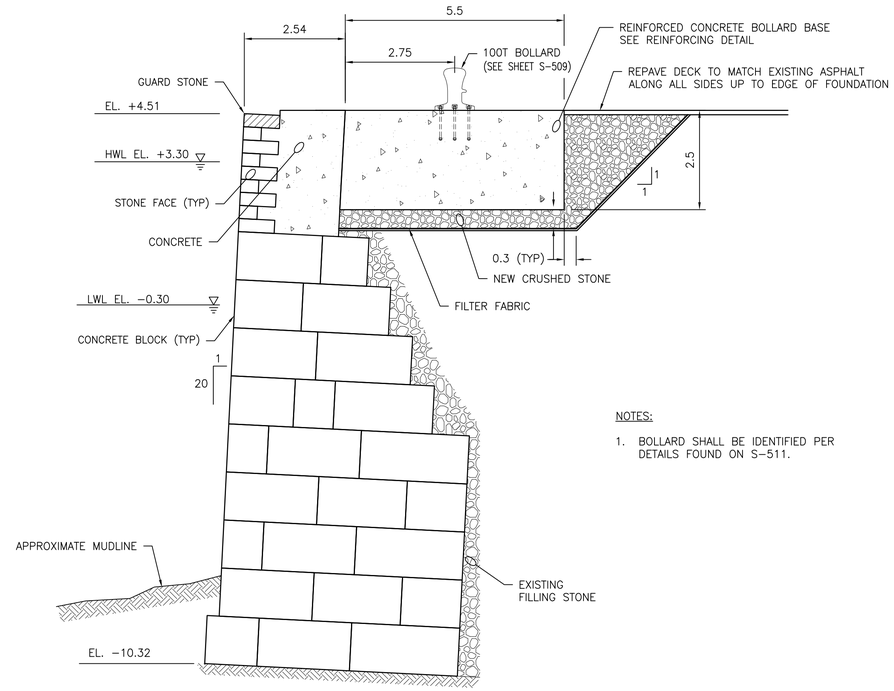


NOTES:

1. BOLLARD SHALL BE IDENTIFIED PER DETAILS FOUND ON S-511.

BID OPTION ITEM 002 / CLIN 0007

## BOLLARD P170-M REPLACEMENT SECTION

SCALE: 1:75 S-506 C4

0 2.0 4.0 8.0 m

GRAPHIC SCALE: 1:75

GENERAL NOTES:

1. CONTRACTOR SHALL PROVIDE SHORING TO PREVENT LOSS OF SUPPORT TO UTILITIES AND ADJACENT STRUCTURES DURING ANY EXCAVATION AND CONSTRUCTION OF THE BOLLARD.
2. LOCATE AND PROTECT 400mm FIRE LINE
3. TEMPORARILY RELOCATE THEN REPLACE BILGE PUMP LINE.
4. REMOVE UNKNOWN 400mm LINE, CONFIRM WITH CONTRACTING OFFICER THAT THE LINE IS ABANDONED PRIOR TO REMOVAL.
5. I.D./LOCATE ALL PIPES PRIOR TO EXCAVATION.
6. PREPARE PLAN OF EXISTING UTILITIES AND EXCAVATION PLAN PRIOR TO EXCAVATION FOR BOLLARD FOUNDATION, SUBMIT TO CONTRACTING OFFICER FOR APPROVAL.
7. CONTRACTOR SHALL CONDUCT EXPLORATORY EXCAVATIONS IN THE AREA OF THE BOLLARD FOUNDATION TO DETERMINE THE LOCATION, SIZE AND TYPE OF PIPES AND/OR ELECTRICAL CONDUITS THAT MAY INTERFERE WITH THE EXCAVATION.
8. UTILITIES SHOWN ON PLAN ARE APPROXIMATE.

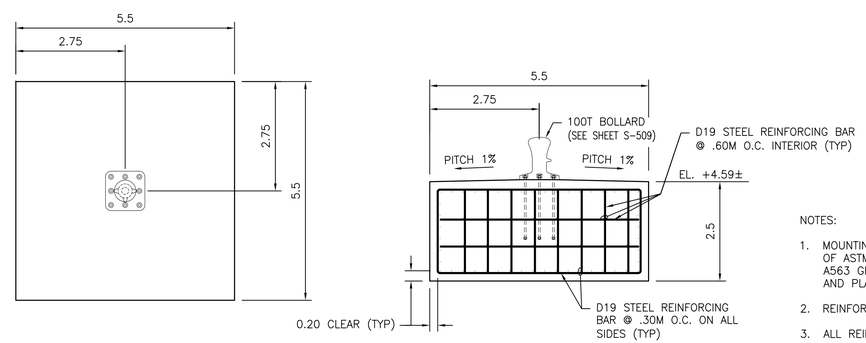


NOTES:

1. MOUNTING HARDWARE BOLTS SHALL BE 750MM LONG M48 OF ASTM F1554 GRADE ISO STEEL, NUTS SHALL BE ASTM A563 GRADE DH STEEL, WASHERS SHALL BE ASTM F436 AND PLATE WASHERS SHALL BE ASTM A36 STEEL.
2. REINFORCING STEEL SHALL BE Fy410 mPa.
3. ALL REINFORCING STEEL SHALL BE EPOXY COATED AND CONFORM TO ASTM A775/A775M.

BID OPTION ITEM 002 / CLIN 0007

## BOLLARD P170-M REINFORCING

SCALE: 1:75 S-506 A2

0 2.0 4.0 8.0 m

GRAPHIC SCALE: 1:75

| SYM | DESCRIPTION | DATE | APPR |
|---|---|---|---|
| 1 | REMOVE BOLLARD 170-GG | 11/12/15 | |
| A | REPLACE BOLLARD P170-R | 01/20/14 | CMR |

NAVFAC

COMMONWEALTH OF MASSACHUSETTS CHARLES MARSHALL ROBERTS CIVIL No. 50339 REGISTERED PROFESSIONAL ENGINEER

3/12/14

SEAL


CHILDS ENGINEERING CORPORATION
34 WILLIAM WAY BELLINGHAM, MASSACHUSETTS 02019 U.S.A.
Phone: (508) 966-9092
Fax: (508) 966-9096
E-mail: mail@childseng.com
A/E INFO


APPROVED

FOR COMMANDER NAVFAC

ACTIVITY

SATISFACTORY TO DATE

DES CMR DRW TEQ CHK CDS

BRANCH MANAGER

CHIEF ENG/ARCH

DEPARTMENT OF THE NAVY
NAVAL FACILITIES ENGINEERING COMMAND
NAVAL FACILITIES ENGINEERING COMMAND
FISC, AKASAKI TERMINAL
SASEBO, JAPAN

# REPAIRS TO FUELING PIER 170

BOLLARD P170-M REPLACEMENT DETAILS

SCALE: AS NOTED

EPROJECT NO.:

CONSTR. CONTR. NO.

NAVFAC DRAWING NO. 10006568

SHEET 20 OF 26

S-506

DRAWFORM REVISION: 10 MARCH 2009

BOLLARD P170-GG REPLACEMENT IS NOT INCLUDED AS PART OF THIS CONTRACT SCOPE DRAWINGS ARE LEFT FOR REFERENCE AND INFORMATION ONLY. 1

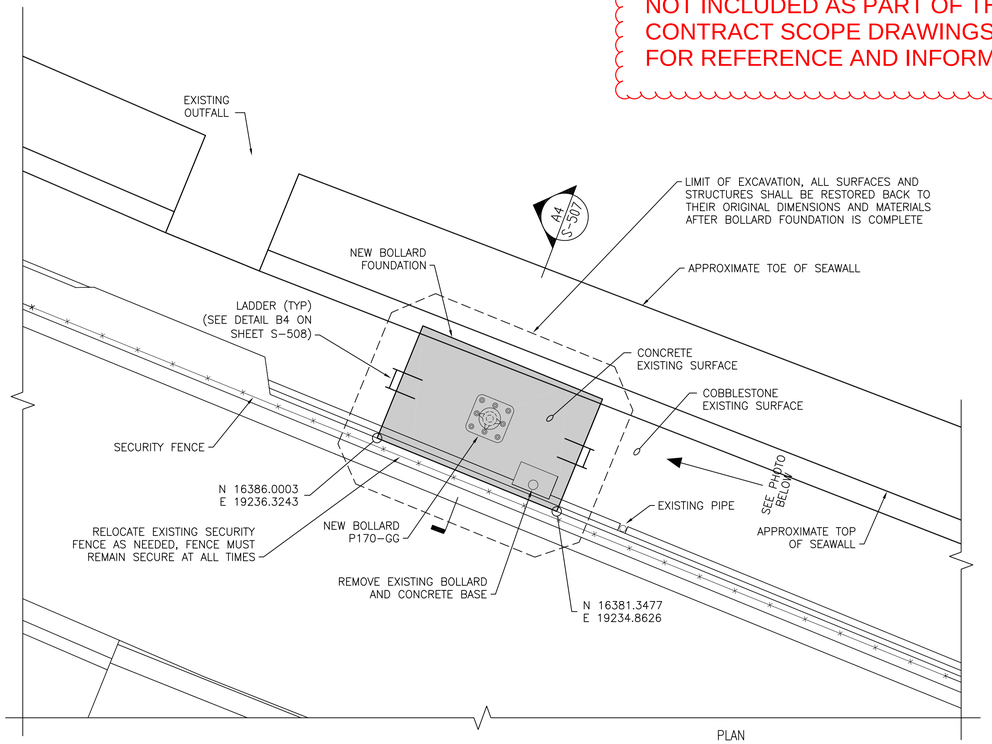


## BOLLARD P170-GG REPLACEMENT PLAN

SCALE: 1:75 C-101 S-107

PLAN NORTH

0 2.0 4.0 8.0 m

GRAPHIC SCALE: 1:75

NOTES:

1. BOLLARD SHALL HAVE A CAPACITY OF 100 TONS.
2. BOLLARD SHALL BE A CAST STEEL MSB100 SINGLE BIT BOLLARD BY MARITIME INTERNATIONAL OR EQUAL.
3. BOLLARD SHALL BE INSTALLED IN ACCORDANCE WITH MANUFACTURERS RECOMMENDATIONS.
4. CONCRETE FOR BOLLARD BASE SHALL HAVE A MINIMUM 28 DAY COMPRESSIVE STRENGTH OF 34.4 mPa.
5. CONCRETE FOR BOLLARD BASE SHALL HAVE 5% TO 7% ENTRAINED AIR.
6. CONCRETE FOR PIPE PILE FILL SHALL HAVE A MINIMUM 28 DAY COMPRESSIVE STRENGTH OF 20.7 mPa.
7. REINFORCING STEEL SHALL BE Fy – 410 mPa.
8. ALL REINFORCING STEEL SHALL BE EPOXY COATED AND CONFORM TO ASTM A775/A775M.
9. STEEL PIPE PILES SHALL CONFORM TO ASTM A252–77A GRADE 3.
10. ROCK ANCHOR DESIGN LOAD SHALL BE 90 TONNES EACH. ESTIMATED BOND LENGTH IS 6.4 METERS BASED ON A SHAFT DIAMETER OF .219 METERS, ULTIMATE ROCK/GROUT BOND STRESS OF 0.55 mPa, AND FACTOR OF SAFETY OF 3.0.
11. REINFORCING BAR SHALL BE A 63mm DSI THREAD BAR GRADE 550 OR EQUIVALENT.
12. BOLLARD SHALL BE IDENTIFIED PER DETAIL FOUND ON S–511.
13. GROUT ROCK ANCHOR POCKET WITH TOP OF BOLLARD AFTER ROCK ANCHOR IS INSTALLED.

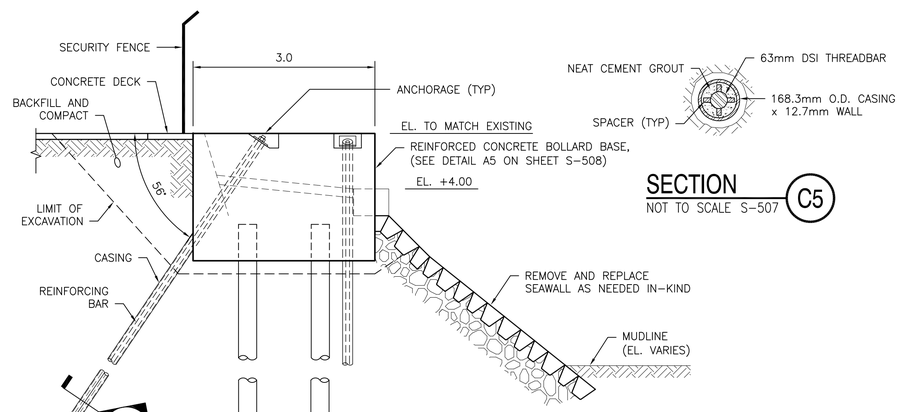


## SECTION C5

NOT TO SCALE S-507

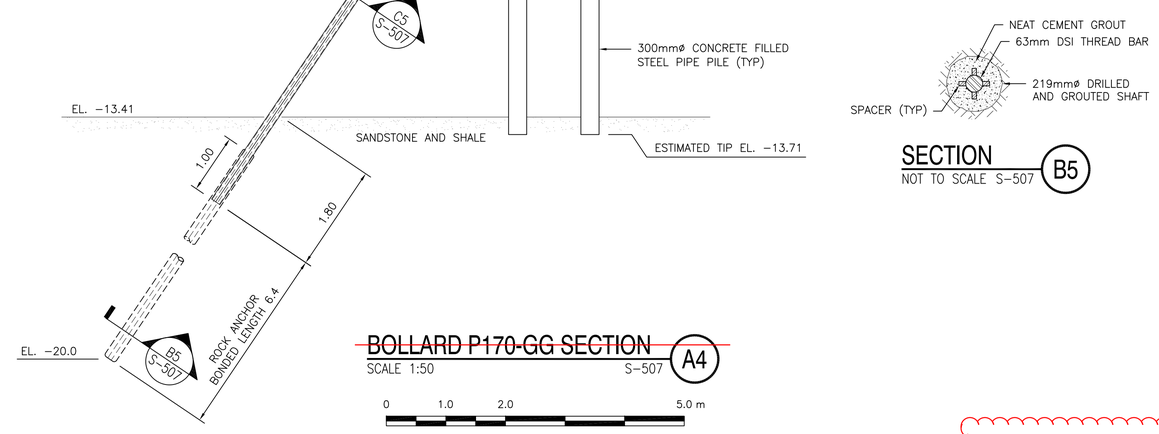


## SECTION B5

NOT TO SCALE S-507

## BOLLARD P170-GG SECTION A4

SCALE 1:50 S-507

0 1.0 2.0 5.0 m

GRAPHIC SCALE: 1:50

NOT IN CONTRACT

| SYM | DESCRIPTION | DATE | APPR |
|---|---|---|---|
| 1 | REMOVE BOLLARD 170-GG | 11/12/15 | |

NAVFAC

COMMONWEALTH OF MASSACHUSETTS CHARLES MARSHALL ROBERTS CIVIL No. 50339 REGISTERED PROFESSIONAL ENGINEER

3/12/14

SEAL


CHILDS ENGINEERING CORPORATION
34 WILLIAM WAY BELLINGHAM, MASSACHUSETTS 02019 U.S.A.
Phone: (508) 966–9092
Fax: (508) 966–9096
E–mail: mail@childseng.com
A/E INFO


APPROVED

FOR COMMANDER NAVFAC

ACTIVITY

SATISFACTORY TO DATE

DES CMR DRW TEQ CHK CDS

BRANCH MANAGER

CHIEF ENG/ARCH

DEPARTMENT OF THE NAVY
NAVAL FACILITIES ENGINEERING COMMAND
NAVAL FACILITIES ENGINEERING COMMAND
FISC, AKASAKI TERMINAL
SASEBO, JAPAN

# REPAIRS TO FUELING PIER 170

BOLLARD P170–GG INSTALLATION DETAILS

SCALE: AS NOTED

EPROJECT NO.:

CONSTR. CONTR. NO.

NAVFAC DOCUMENT NO. 10006569

SHEET 21 OF 26

S-507

DRAWFORM REVISION: 10 MARCH 2009

BOLLARD P170-GG REPLACEMENT IS NOT INCLUDED AS PART OF THIS CONTRACT SCOPE DRAWINGS ARE LEFT FOR REFERENCE AND INFORMATION ONLY. 1

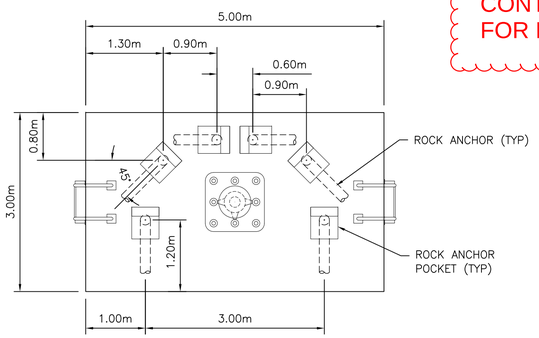


PLAN @ TOP

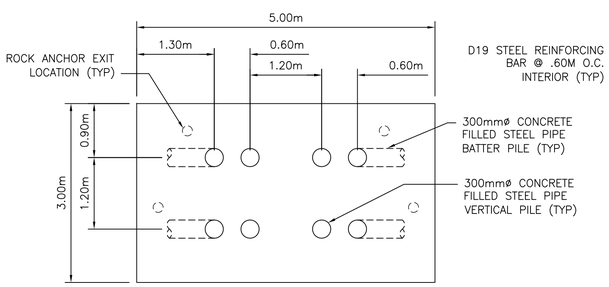


PLAN @ BOTTOM

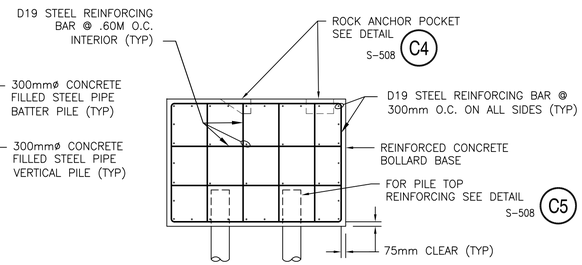


REINFORCING SECTION

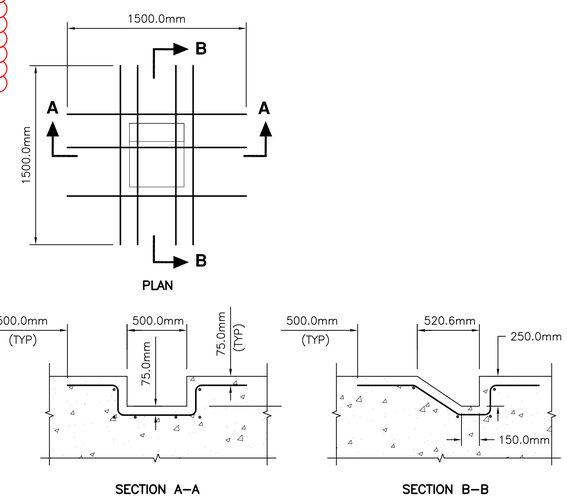


PLAN

SECTION A–A

SECTION B–B

## ROCK ANCHOR POCKET C4

SCALE 1:25 S-508

0 500 1000 2500 mm

GRAPHIC SCALE: 1:25

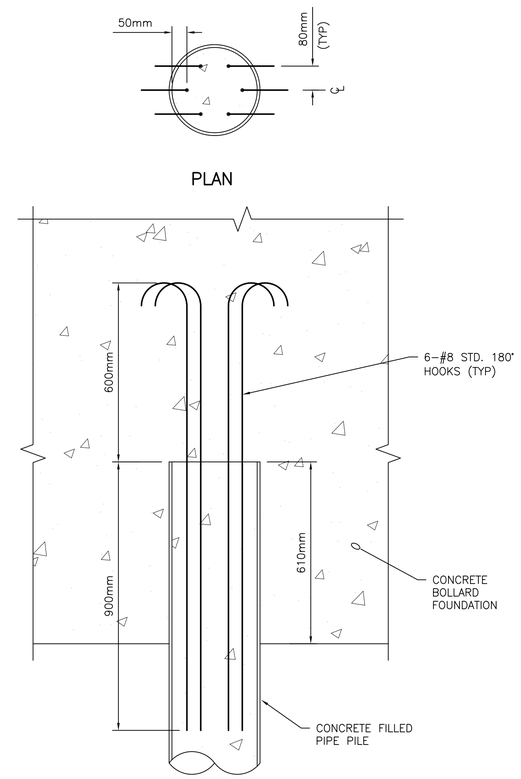


PLAN

SECTION

## PILE TOP DETAIL C5

SCALE 1:10 S-508

0 250 500 1000 mm

GRAPHIC SCALE: 1:10

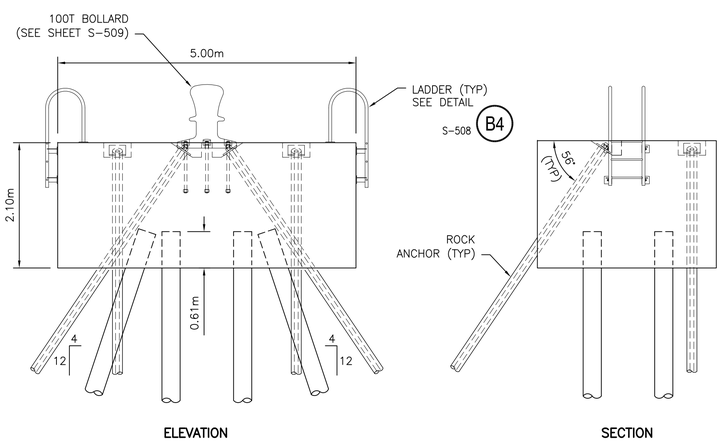


ELEVATION

SECTION

## BOLLARD P170-GG DETAIL A5

SCALE 1:50 S-507

0 1000 2000 5000 mm

GRAPHIC SCALE: 1:50

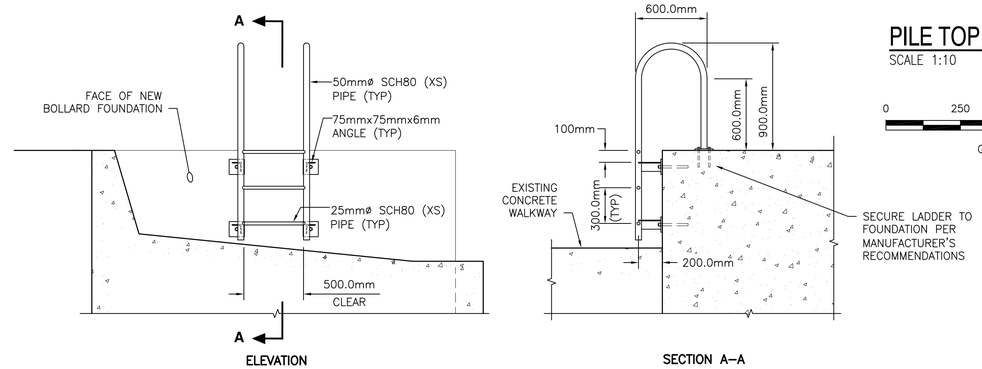


ELEVATION

SECTION A–A

## LADDER DETAIL B4

SCALE 1:25 S-507

0 500 1000 2500 mm

GRAPHIC SCALE: 1:25

NOT IN CONTRACT

| SYM | DESCRIPTION | DATE | APPR |
|---|---|---|---|
| 1 | REMOVE BOLLARD 170-GG | 11/12/15 | |

NAVFAC

COMMONWEALTH OF MASSACHUSETTS CHARLES MARSHALL ROBERTS CIVIL No. 50339 REGISTERED PROFESSIONAL ENGINEER 3/12/14 SEAL


CHILDS ENGINEERING CORPORATION
34 WILLIAM WAY BELLINGHAM, MASSACHUSETTS 02019 U.S.A.
Phone: (508) 966-9092
Fax: (508) 966-9096
E-mail: mail@childseng.com
A/E INFO


APPROVED

FOR COMMANDER NAVFAC

ACTIVITY

SATISFACTORY TO DATE

DES CMR DRW TEQ CHK CDS

BRANCH MANAGER

CHIEF ENG/ARCH

DEPARTMENT OF THE NAVY
NAVAL FACILITIES ENGINEERING COMMAND
NAVAL FACILITIES ENGINEERING COMMAND
FISC, AKASAKI TERMINAL
SASEBO, JAPAN

# REPAIRS TO FUELING PIER 170

BOLLARD P170-GG DETAILS

SCALE: AS NOTED

EPROJECT NO.:

CONSTR. CONTR. NO.

NAVFAC DRAWING NO. 10006570

SHEET 22 OF 26

S-508

DRAWING REVISION: 10 MARCH 2009

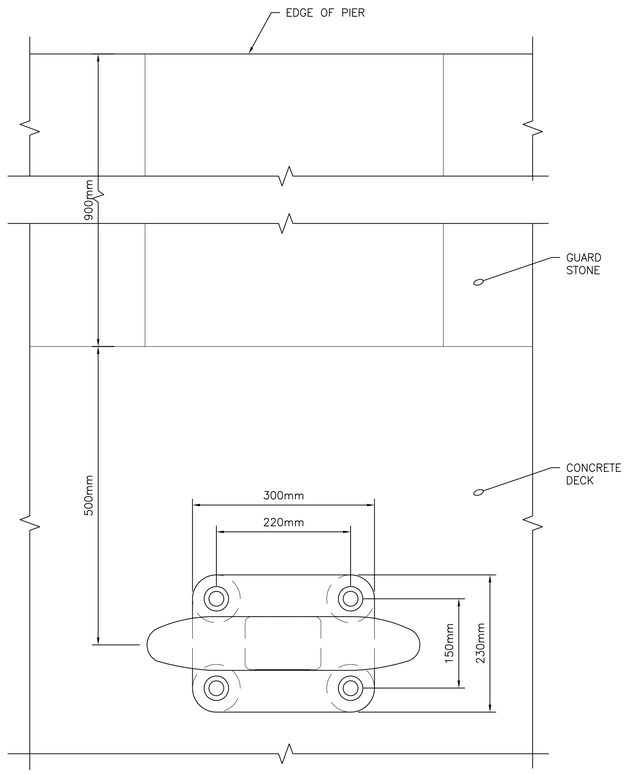


**PLAN**

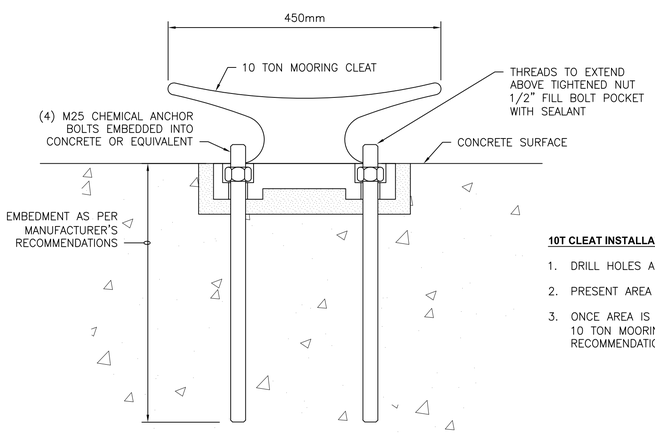


**ELEVATION**

**10T CLEAT INSTALLATION**

1. DRILL HOLES AS NEEDED FOR CHEMICAL ANCHOR BOLTS.
2. PRESENT AREA TO CONTRACTING OFFICER FOR APPROVAL.
3. ONCE AREA IS APPROVED BY CONTRACTION OFFICER. INSTALL 10 TON MOORING CLEAT AS PER MANUFACTURER'S RECOMMENDATIONS.

## 10T CLEAT INSTALLATION DETAIL (B1)

SCALE 1:5 — S-101, S-102, S-103

0 100 200 500 mm

GRAPHIC SCALE: 1:5

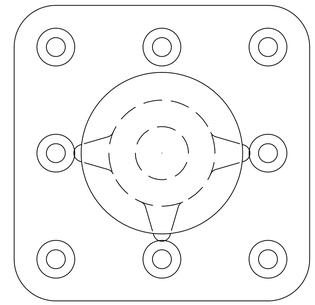

**PLAN**

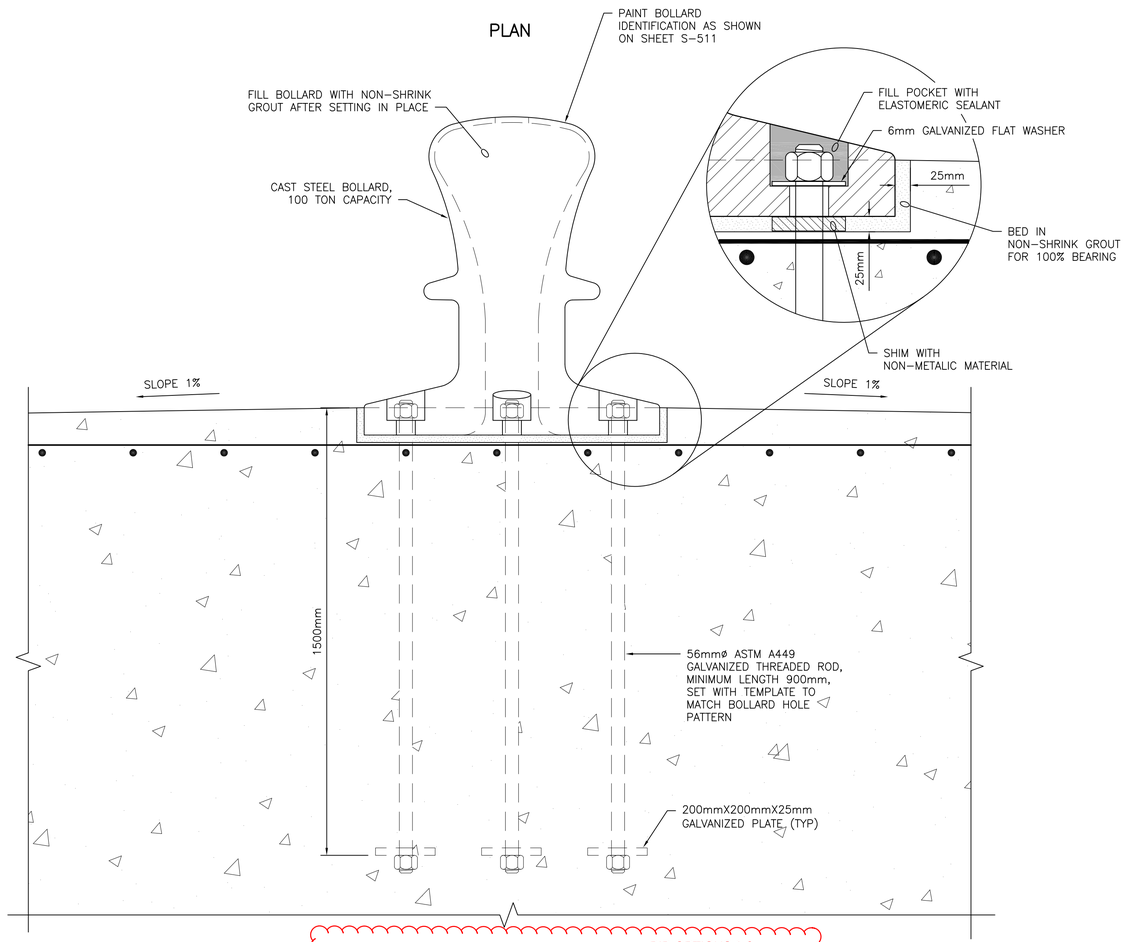


**SECTION**

BID OPTIONS 1-3
CLINS 0006-0008

1

## NEW 100 TON BOLLARD DETAIL (A4)

SCALE 1:10 — S-506 TO S-508

0 250 500 1000 mm

GRAPHIC SCALE: 1:10

| SYM | DESCRIPTION | DATE | APPR |
|---|---|---|---|
| 1 | REMOVE BOLLARD 170-GG | 11/12/15 | |

NAVFAC

COMMONWEALTH OF MASSACHUSETTS — CHARLES MARSHALL ROBERTS — CIVIL — No. 50339 — REGISTERED PROFESSIONAL ENGINEER

3/12/14

SEAL


CHILDS ENGINEERING CORPORATION
34 WILLIAM WAY BELLINGHAM, MASSACHUSETTS 02019 U.S.A.
Phone: (508) 966-9092
Fax: (508) 966-9096
E-mail: mail@childseng.com
A/E INFO


APPROVED

FOR COMMANDER NAVFAC

ACTIVITY

SATISFACTORY TO DATE

DES CMR | DRW TEQ | CHK CDS

<<PM/DM>>

BRANCH MANAGER

CHIEF ENG/ARCH

<<XX>>

DEPARTMENT OF THE NAVY
NAVAL FACILITIES ENGINEERING COMMAND
NAVAL FACILITIES ENGINEERING COMMAND

FISC, AKASAKI TERMINAL — SASEBO, JAPAN

REPAIRS TO FUELING PIER 170

CLEAT AND BOLLARD INSTALLATION DETAILS

SCALE: AS NOTED

EPROJECT NO.:

CONSTR. CONTR. NO.

NAVFAC DRAWING NO. 10006571

SHEET 23 OF 26

S-509

DRAWFORM REVISION: 10 MARCH 2009

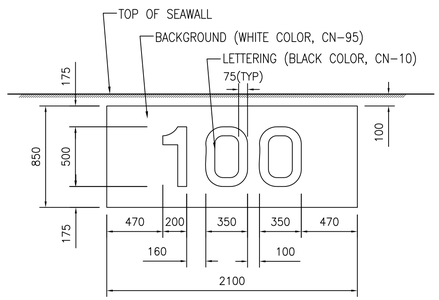


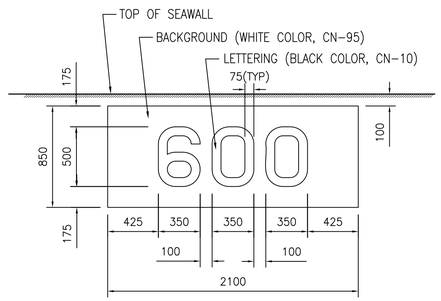


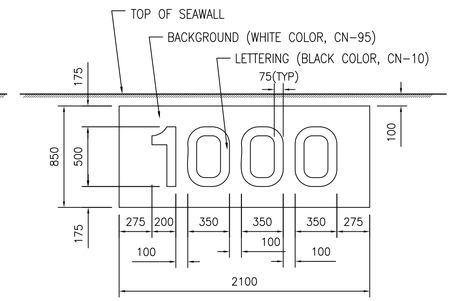


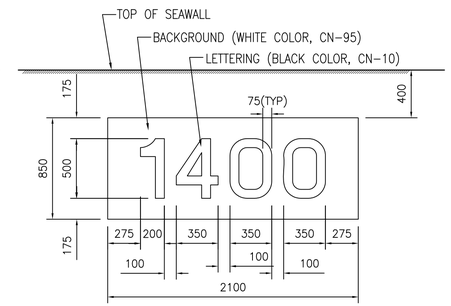


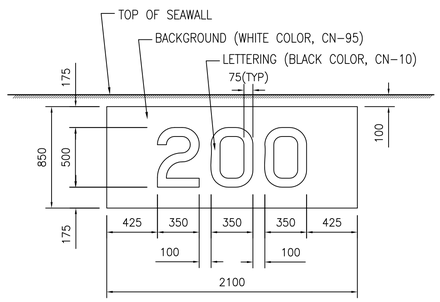


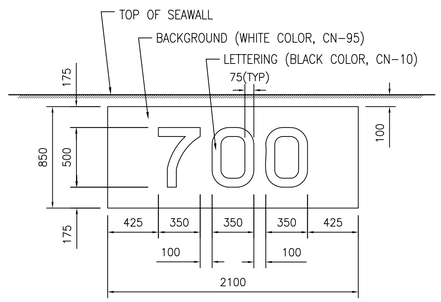


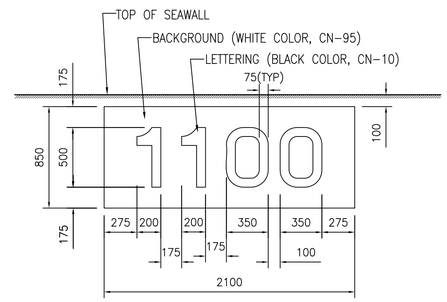


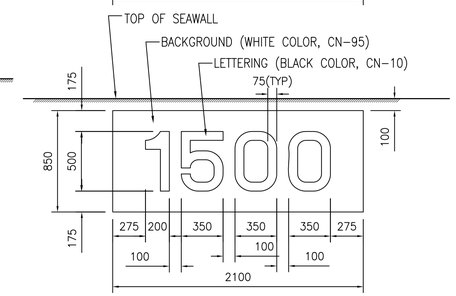


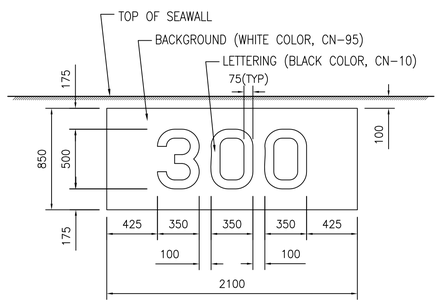


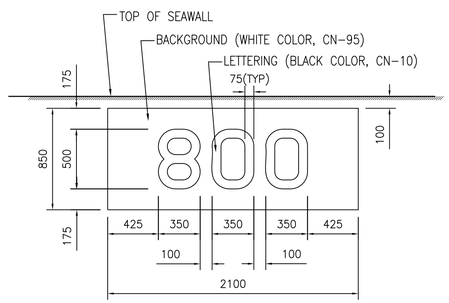


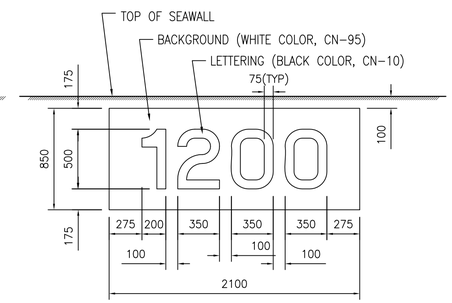


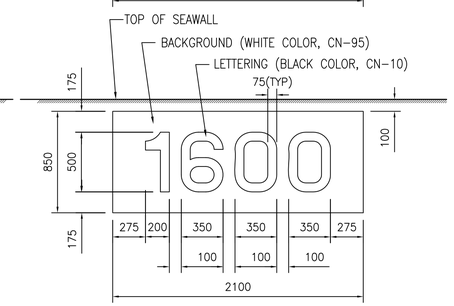


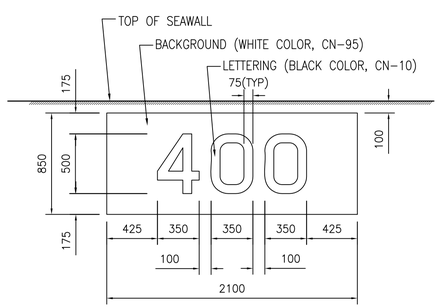


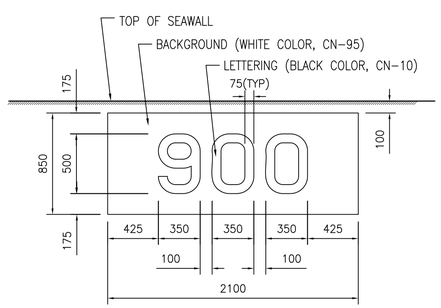


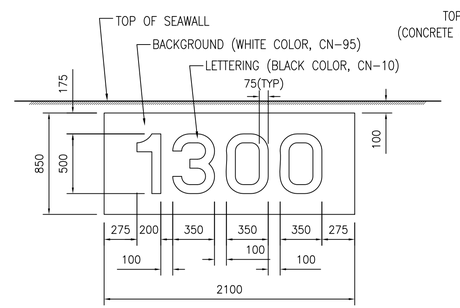


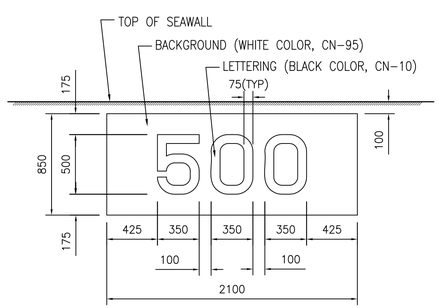


## DISTANCE MARK ELEVATION- SEAWALL

SCALE = 1:25 S-107 A3

0 0.5 1.0 2.5 m

GRAPHIC SCALE: 1:25

0 0.25 0.5 1.0 m

GRAPHIC SCALE: 1:10




## SECTION OF SEAWALL

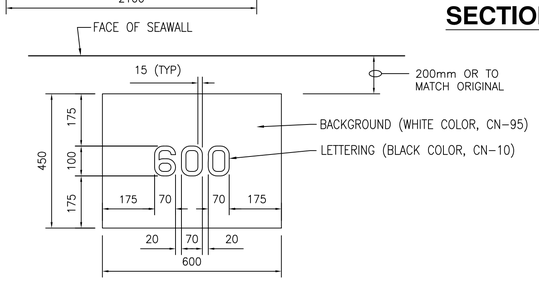


## DISTANCE MARK PLAN- TOP DECK

SCALE = 1:10

NOTES:

1. LOCATIONS OF DISTANCE MARKS ARE INDICATED BY DISTANCE FROM NORTH EDGE CORNER OF SEAWALL.
2. LOCATIONS OF DISTANCE MARKS SHALL BE CONFIRMED AND APPROVED BY THE PORT OPERATIONS, VIA THE CONTRACTING OFFICER, IN WRITING IN ADVANCE ON WHICH THEY ARE REQUIRED TO PROVIDE.
3. DISTANCE MARKS SHALL BE PAINTED AFTER THOROUGHLY REMOVAL OF EXISTING DISTANCE MARKS UNDER PAYING ATTENTION TO PREVENT SERIOUS DAMAGE TO EXISTING CONCRETE SURFACES.
4. DISTANCE MARKERS SHALL BE REPAINTED ON THE TOP DECK AND FRONT OF SEAWALL.
5. DISTANCE MARKERS ON FRONT OF SEAWALL SHALL BE 2100mmX850mm WITH A TEXT HEIGHT OF 500mm. DISTANCE MARKERS ON TOP DECK SHALL BE 600mmX450mm WITH A TEXT HEIGHT OF 100mm.

PAINT SCHEDULE

| ITEM | KIND OF PAINT | NO OF COAT | PORTION | APPLICATION | COLOR |
|---|---|---|---|---|---|
| CONC & STONE SURFACE | ACRYLIC EMULSION SEALER | 1 | SIDE OF SEAWALL | BRUSH OR ROLLER | CN-10 (BLACK) |
| | SYNTHETIC RESIN EMULSION PAINT, GLOSSY TYPE (JIS K 5660) | 2 | | | CN-95 (WHITE) |
| NOTE: | 1. INDICATED COLOR NUMBERS ARE IN ACCORDANCE WITH "JAPAN PAINT MANUFACTURER'S ASSOCIATION "VERSION 2005 (C)". 2. DO NOT USE COATINGS HAVING A LEAD CONTENT OVER 0.06 PERCENT BY WEIGHT OF NONVOLATILE CONTENT. | | | | |

| SYM | DESCRIPTION | DATE | APPR |
|---|---|---|---|

NAVFAC

COMMONWEALTH OF MASSACHUSETTS CHARLES MARSHALL ROBERTS CIVIL No. 50339 REGISTERED PROFESSIONAL ENGINEER
3/12/14
SEAL

CHILDS ENGINEERING CORPORATION
34 WILLIAM WAY BELLINGHAM, MASSACHUSETTS 02019 U.S.A.
Phone: (508) 966-9092
Fax: (508) 966-9096
E-mail: mail@childseng.com
A/E INFO

APPROVED
FOR COMMANDER NAVFAC
ACTIVITY
SATISFACTORY TO DATE
DES CMR DRW TEQ CHK CDS
BRANCH MANAGER
CHIEF ENG/ARCH

DEPARTMENT OF THE NAVY
NAVAL FACILITIES ENGINEERING COMMAND
NAVAL FACILITIES ENGINEERING COMMAND
FISC, AKASAKI TERMINAL
SASEBO, JAPAN
REPAIRS TO FUELING PIER 170
REPAINT DISTANCE MARK

SCALE: AS NOTED
EPROJECT NO.
CONSTR. CONTR. NO.
NAVFAC DRAWING NO. 10006572
SHEET 24 OF 26
S-510

DRAWFORM REVISION: 10 MARCH 2009

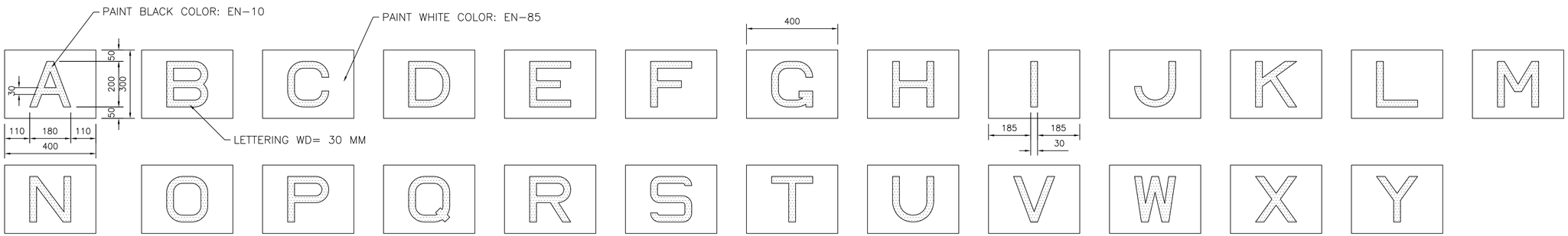


## BOLLARD IDENTIFICATION MARK DETAIL

SCALE = 1:10

S-101 TO 106

D3

0 0.25 0.5 1.0 m

GRAPHIC SCALE: 1:10

NOTES:

1. ALL BOLLARDS ARE CURRENTLY IDENTIFIED WITH LETTERING. THIS SHOULD BE MATCHED AS CLOSELY AS POSSIBLE.
2. BOLLARDS SHALL BE CLEANED TO SA 2 PRIOR TO INSPECTION.
3. ONCE COATING IS REMOVED, INSPECT BOLLARDS FOR SIGNS OF ADVANCED CORROSION, THEN PRESENT TO CONTRACTING OFFICER FOR APPROVAL.
4. ONCE COATING REMOVAL IS APPROVED BY CONTRACTING OFFICER, RECOAT BOLLARDS TO MATCH EXISTING COLOR. SEE SPECIFICATION SECTION 05 30 00.01 MOORING HARDWARE FOR MORE DETAILS.
5. APPLY BOLLARD IDENTIFICATION TO MATCH EXISTING. SEE SHEET S-601 FOR SCHEDULE.

| SYM | DESCRIPTION | DATE | APPR |
|---|---|---|---|

NAVFAC

COMMONWEALTH OF MASSACHUSETTS
CHARLES MARSHALL ROBERTS
CIVIL
No. 50339
REGISTERED PROFESSIONAL ENGINEER

3/12/14

SEAL

CHILDS ENGINEERING CORPORATION
34 WILLIAM WAY BELLINGHAM, MASSACHUSETTS 02019 U.S.A.
Phone: (508) 966-9092
Fax: (508) 966-9096
E-mail: mail@childseng.com

A/E INFO

APPROVED

FOR COMMANDER NAVFAC

ACTIVITY

SATISFACTORY TO DATE

DES CMR | DRW TEQ | CHK CDS

BRANCH MANAGER

CHIEF ENG/ARCH

DEPARTMENT OF THE NAVY
NAVAL FACILITIES ENGINEERING COMMAND
NAVAL FACILITIES ENGINEERING COMMAND

FISC, AKASAKI TERMINAL
SASEBO, JAPAN

REPAIRS TO FUELING PIER 170

REPAINT BOLLARD I.D.

SCALE: AS NOTED

EPROJECT NO.:

CONSTR. CONTR. NO.

NAVFAC DRAWING NO.
10006573

SHEET 25 OF 26

S-511

DRAWFORM REVISION: 10 MARCH 2009

## REPAIR SCHEDULE

| Defect ID No. | Asset Type | Defect Location Station | Defect Location Ver. Offset | Fac. Sec. | Defect Type | Repair Type | Area ($M^2$) | Depth (mm) |
|---|---|---|---|---|---|---|---|---|
| 2 | SW1 | 0+25.9 | 5.8 | P170 | FRS | A | 0.1 | 150 |
| 3 | SW1 | 0+28.4 | 4.3 | P170 | DSG | A | 0.6 | 300 |
| 19 | CA | 0+76.0 | 2.4 | P170 | OCS | A | 0.3 | 300 |
| 38 | CA | 1+33.5 | 2.7 | P170 | OCS | A | 0.2 | 300 |
| 64 | CA | 3+20.0 | 4.3 | P170 | FRS | A | 0.6 | 300 |
| 66 | CA | 3+52.0 | 12.2 | P170 | FRS | A | 0.4 | 150 |
| 67 | CA | 3+55.1 | 12.2 | P170 | FRS | A | 0.4 | 150 |
| 69 | CA | 3+63.6 | 12.2 | P170 | FRS | A | 0.4 | 150 |
| 72 | CA | 4+11.5 | 7.0 | P170 | BRK | A | 1.1 | 300 |
| 73 | CA | 4+81.6 | 9.8 | P170 | FRS | A | 0.4 | 150 |
| 74 | CA | 5+17.3 | 1.8 | P170 | FRS | A | 0.2 | 100 |

| Defect ID No. | Asset Type | Defect Location Station | Defect Location Ver. Offset | Fac. Sec. | Defect Type | Repair Type | Area ($M^2$) | Depth (mm) |
|---|---|---|---|---|---|---|---|---|
| 8 | CA | 0+47.9 | 0.9 | P170 | OCS | B | 1.1 | 300 |

| Defect ID No. | Asset Type | Defect Location Station | Defect Location Ver. Offset | Fac. Sec. | Defect Type | Repair Type | Area ($M^2$) | Depth (mm) | Exp Bars (#) |
|---|---|---|---|---|---|---|---|---|---|
| 37 | CA | 1+31.4 | 2.4 | P170 | OCS | C | 0.6 | 600 | 1 |

| Defect ID No. | Asset Type | Defect Location Station | Defect Location Ver. Offset | Fac. Sec. | Defect Type | Repair Type | Area ($M^2$) | Depth (mm) |
|---|---|---|---|---|---|---|---|---|
| 5 | SW1 | 0+31.4 | 2.7 | P170 | MIS | D | 1.4 | 300 |
| 6 | SW1 | 0+35.9 | 2.1 | P170 | MIS | D | 0.6 | 250 |
| 7 | SW1 | 0+35.9 | 4.6 | P170 | MIS | D | 0.3 | 250 |

| Defect ID No. | Asset Type | Defect Location Station | Defect Location Ver. Offset | Fac. Sec. | Defect Type | Repair Type | Length (m) | Width (mm) | Depth (mm) |
|---|---|---|---|---|---|---|---|---|---|
| 1 | SW1 | 0+22.9 | 55.8 | P170 | UND | E | 3.0 | 152 | 300 |
| 4 | SW1 | 0+29.6 | 6.1 | P170 | UND | E | 2.4 | 609 | 600 |

| Defect ID No. | Asset Type | Defect Location Station | Defect Location Hor. Offset | Fac. Sec. | Defect Type | Repair Type | Area ($M^2$) | Depth (mm) |
|---|---|---|---|---|---|---|---|---|
| 81 | DA | 2+98.7 | 1.5 | P170 | FRS | F | 0.4 | 50 |
| 108 | DA | 3+94.7 | 1.8 | P170 | FRS | F | 0.6 | 25 |
| 113 | DA | 4+21.5 | 1.8 | P170 | FRS | F | 0.2 | 25 |
| 116 | DA | 4+38.9 | 1.8 | P170 | FRS | F | 0.3 | 25 |
| 121 | DA | 4+57.2 | 1.5 | P170 | FRS | F | 4.6 | 25 |
| 125 | DA | 4+72.4 | 0.9 | P170 | FRS | F | 0.1 | 150 |
| 131 | DA | 4+89.2 | 1.2 | P170 | FRS | F | 0.2 | 75 |
| 138 | DA | 5+06.9 | 0.9 | P170 | FRS | F | 0.6 | 25 |
| 141 | DA | 5+18.2 | 1.2 | P170 | FRS | F | 0.9 | 50 |
| 143 | DA | 5+31.6 | 1.8 | P170 | FRS | F | 0.9 | 50 |

| Defect ID No. | Asset Type | Defect Location Station | Defect Location Hor. Offset | Defect Location Ver. Offset | Fac. Sec. | Defect Type | Repair Type | Length (m) | Width (mm) | Depth (mm) |
|---|---|---|---|---|---|---|---|---|---|---|
| 9 | CA | 0+50.6 | 0.0 | 1.8 | P170 | ABS | G | 1.0 | 1.0 | 75 |
| 11 | DA | 0+60.4 | 0.0 | 0.0 | P170 | FRS | G | 1.8 | 0.1 | 75 |
| 35 | DA | 1+25.6 | 0.0 | 0.0 | P170 | FRS | G | 9.0 | 0.2 | 150 |
| 43 | DA | 1+74.65 | 0.0 | 0.0 | P170 | ABS | G | 16.8 | | 150 |
| 56 | DA | 2+67 | 2.7 | 0.0 | P170 | CCS | G | 2.0 | 0.1 | 75 |
| 83 | DA | 3+18.8 | 0.0 | 0.0 | P170 | ABS | G | 2.0 | 0.1 | 50 |
| 86 | DA | 3+24 | 0.0 | 0.0 | P170 | ABS | G | 3.0 | 0.1 | 75 |
| 89 | DA | 3+31.3 | 0.0 | 0.0 | P170 | ABS | G | 1.8 | 0.1 | 100 |
| 91 | DA | 3+35.3 | 0.0 | 0.0 | P170 | ABS | G | 1.5 | 0.1 | 75 |
| 92 | DA | 3+39.9 | 0.0 | 0.0 | P170 | ABS | G | 2.4 | 0.1 | 75 |
| 94 | DA | 3+58.1 | 0.0 | 0.0 | P170 | ABS | G | 1.2 | 0.1 | 50 |
| 98 | DA | 3+70.3 | 0.0 | 0.0 | P170 | ABS | G | 9.1 | 0.1 | 75 |
| 104 | DA | 3+87.1 | 0.0 | 0.0 | P170 | ABS | G | 15.2 | 0.1 | 75 |
| 117 | DA | 4+40.1 | 0.0 | 0.0 | P170 | FRS | G | 3.0 | 0.1 | 75 |
| 136 | DA | 5+01.1 | 0.0 | 0.0 | P170 | ABS | G | 1.5 | 0.1 | 250 |
| 144 | DA | 5+31.6 | 0.0 | 0.0 | P170 | ABS | G | 1.2 | 0.1 | 150 |
| 146 | DA | 5+33.4 | 0.0 | 0.0 | P170 | ABS | G | 1.0 | 0.1 | 125 |
| 151 | DA | 5+41.9 | 0.0 | 0.0 | P170 | ABS | G | 3.0 | 0.1 | 100 |
| 154 | DA | 5+45.9 | 0.0 | 0.0 | P170 | FRS | G | 3.0 | 0.1 | 50 |
| 155 | DA | 5+46.2 | 0.0 | 0.0 | P170 | ABS | G | 1.5 | 0.1 | 100 |

| Defect ID No. | Asset Type | Defect Location Station | Defect Location Hor. Offset | Defect Location Ver. Offset | Fac. Sec. | Defect Type | Repair Type | Length (m) | Width (mm) |
|---|---|---|---|---|---|---|---|---|---|
| 54 | SW | 2+65.2 | 0.9 | 1.5 | P170 | CRV | H | 3.0 | 25 |

## REPAIR SCHEDULE

| Defect ID No. | Asset Type | Defect Location Station | Defect Location Hor. Offset | Fac. Sec. | Defect Type | Repair Type | Length (m) | Width (mm) |
|---|---|---|---|---|---|---|---|---|
| 10 | DA | 0+59.4 | 0.9 | P170 | CRT | J | 2.0 | 3 |
| 12 | DA | 0+61.3 | 0.9 | P170 | CRT | J | 2.0 | 3 |
| 13 | DA | 0+63.4 | 0.9 | P170 | CRT | J | 2.0 | 3 |
| 14 | DA | 0+64.3 | 0.9 | P170 | CRT | J | 2.0 | 3 |
| 15 | DA | 0+66.6 | 0.9 | P170 | CRT | J | 2.0 | 3 |
| 16 | DA | 0+70.4 | 0.9 | P170 | CRT | J | 2.0 | 3 |
| 17 | DA | 0+72.5 | 0.9 | P170 | CRT | J | 2.0 | 3 |
| 18 | DA | 0+74.1 | 0.9 | P170 | CRT | J | 2.0 | 3 |
| 20 | DA | 0+78.3 | 0.9 | P170 | CRT | J | 2.0 | 3 |
| 21 | DA | 0+80.2 | 0.9 | P170 | CRT | J | 2.0 | 3 |
| 22 | DA | 0+83.5 | 0.9 | P170 | CRT | J | 2.0 | 3 |
| 23 | DA | 0+87.2 | 0.9 | P170 | CRT | J | 2.0 | 3 |
| 24 | DA | 0+89.3 | 0.9 | P170 | CRT | J | 2.0 | 3 |
| 25 | DA | 0+91.4 | 0.9 | P170 | CRT | J | 2.0 | 3 |
| 26 | DA | 0+92.9 | 0.9 | P170 | CRT | J | 2.0 | 3 |
| 27 | DA | 0+95.7 | 0.9 | P170 | CRT | J | 2.0 | 3 |
| 28 | DA | 1+00.6 | 0.9 | P170 | CRT | J | 2.0 | 3 |
| 29 | DA | 1+02.4 | 0.9 | P170 | CRT | J | 2.0 | 3 |
| 30 | DA | 1+03.9 | 0.9 | P170 | CRT | J | 2.0 | 3 |
| 31 | DA | 1+05.8 | 0.9 | P170 | CRT | J | 2.0 | 3 |
| 32 | DA | 1+10.3 | 0.9 | P170 | CRT | J | 2.0 | 3 |
| 33 | DA | 1+15.2 | 0.9 | P170 | CRT | J | 2.0 | 3 |
| 34 | DA | 1+23.8 | 0.9 | P170 | CRT | J | 2.0 | 3 |
| 39 | DA | 1+35.0 | 0.9 | P170 | CRT | J | 2.0 | 3 |
| 40 | DA | 1+39.9 | 0.9 | P170 | CRT | J | 2.0 | 3 |
| 41 | DA | 1+69.8 | 0.9 | P170 | CRT | J | 2.0 | 3 |
| 42 | DA | 1+74.0 | 0.9 | P170 | CRT | J | 2.0 | 3 |
| 45 | DA | 1+92.0 | 0.6 | P170 | CRL | J | 4.0 | 3 |
| 48 | DA | 2+26.2 | 0.9 | P170 | CRT | J | 2.0 | 6 |
| 52 | DA | 2+63.7 | 1.5 | P170 | CRD | J | 2.0 | 6 |
| 79 | DA | 2+90.2 | 1.5 | P170 | CRT | J | 1.0 | 6 |
| 80 | DA | 2+97.5 | 1.5 | P170 | CRT | J | 7.6 | 3 |
| 82 | DA | 3+17.6 | 1.5 | P170 | CRT | J | 1.0 | 6 |
| 84 | DA | 3+19.1 | 1.5 | P170 | CRT | J | 1.0 | 6 |
| 85 | DA | 3+23.4 | 1.5 | P170 | CRT | J | 1.0 | 6 |
| 87 | DA | 3+26.1 | 1.5 | P170 | CRT | J | 1.0 | 6 |
| 88 | DA | 3+30.4 | 1.5 | P170 | CRT | J | 1.0 | 6 |
| 90 | DA | 3+35.2 | 1.5 | P170 | CRT | J | 1.0 | 6 |
| 93 | DA | 3+41.1 | 1.5 | P170 | CRT | J | 1.0 | 3 |
| 95 | DA | 3+59.1 | 1.5 | P170 | CRT | J | 1.0 | 3 |
| 96 | DA | 3+61.5 | 0.3 | P170 | CRT | J | 1.0 | 3 |
| 97 | DA | 3+67.3 | 1.5 | P170 | CRT | J | 1.0 | 3 |
| 99 | DA | 3+70.6 | 1.5 | P170 | CRT | J | 1.0 | 3 |
| 100 | DA | 3+73.1 | 1.5 | P170 | CRT | J | 1.0 | 3 |
| 101 | DA | 3+80.7 | 1.5 | P170 | CRT | J | 1.0 | 3 |
| 102 | DA | 3+81 | 1.5 | P170 | CRT | J | 1.0 | 3 |
| 103 | DA | 3+86.2 | 1.5 | P170 | CRT | J | 1.0 | 3 |
| 105 | DA | 3+88.3 | 1.5 | P170 | CRT | J | 1.0 | 3 |
| 106 | DA | 3+90.1 | 1.5 | P170 | CRT | J | 1.0 | 3 |
| 107 | DA | 3+91.4 | 1.5 | P170 | CRL | J | 3.0 | 3 |
| 109 | DA | 4+00.2 | 1.5 | P170 | CRT | J | 1.0 | 3 |
| 110 | DA | 4+01.4 | 1.5 | P170 | CRT | J | 3.0 | 3 |
| 111 | DA | 4+10.6 | 1.5 | P170 | CRT | J | 1.0 | 3 |
| 112 | DA | 4+11.8 | 2.7 | P170 | CRT | J | 1.0 | 3 |
| 114 | DA | 4+34.9 | 1.5 | P170 | CRT | J | 1.0 | 3 |
| 115 | DA | 4+37.7 | 1.5 | P170 | CRL | J | 1.2 | 3 |
| 118 | DA | 4+43.2 | 2.4 | P170 | CRT | J | 3.7 | 3 |
| 119 | DA | 4+46.2 | 1.8 | P170 | CRL | J | 6.1 | 6 |
| 120 | DA | 4+49.6 | 1.8 | P170 | CRL | J | 3.0 | 3 |
| 122 | DA | 4+64.8 | 19.8 | P170 | CRL | J | 3.0 | 3 |
| 123 | DA | 4+69.1 | 1.5 | P170 | CRT | J | 1.0 | 3 |
| 124 | DA | 4+70.9 | 1.5 | P170 | CRT | J | 1.0 | 3 |
| 126 | DA | 4+75.8 | 1.5 | P170 | CRT | J | 1.0 | 3 |
| 127 | DA | 4+80.1 | 1.5 | P170 | CRT | J | 1.0 | 3 |
| 128 | DA | 4+83.1 | 1.5 | P170 | CRT | J | 1.0 | 3 |
| 129 | DA | 4+86.2 | 1.5 | P170 | CRT | J | 1.0 | 3 |
| 130 | DA | 4+87.1 | 1.5 | P170 | CRT | J | 1.0 | 3 |
| 132 | DA | 4+91.6 | 1.5 | P170 | CRT | J | 1.0 | 3 |
| 133 | DA | 4+93.8 | 1.5 | P170 | CRT | J | 1.0 | 3 |
| 134 | DA | 4+96.2 | 1.5 | P170 | CRT | J | 1.0 | 3 |
| 135 | DA | 4+98.7 | 1.5 | P170 | CRL | J | 3.0 | 3 |
| 137 | DA | 5+02.0 | 2.4 | P170 | CRT | J | 2.0 | 6 |
| 139 | DA | 5+11.2 | 1.5 | P170 | CRT | J | 1.0 | 3 |
| 140 | DA | 5+13.3 | 1.5 | P170 | CRT | J | 1.0 | 3 |
| 142 | DA | 5+30.9 | 1.5 | P170 | CRT | J | 1.0 | 3 |
| 145 | DA | 5+32.8 | 1.5 | P170 | CRT | J | 1.0 | 3 |
| 147 | DA | 5+36.5 | 1.5 | P170 | CRT | J | 1.0 | 3 |
| 148 | DA | 5+37.6 | 1.5 | P170 | CRT | J | 1.0 | 3 |
| 149 | DA | 5+40.1 | 1.5 | P170 | CRT | J | 1.0 | 3 |
| 150 | DA | 5+41.3 | 1.5 | P170 | CRT | J | 1.0 | 3 |
| 152 | DA | 5+43.5 | 1.5 | P170 | CRT | J | 1.0 | 3 |
| 153 | DA | 5+44.4 | 1.5 | P170 | CRT | J | 1.0 | 3 |
| 156 | DA | 5+50.2 | 1.5 | P170 | CRT | J | 1.0 | 3 |
| 157 | DA | 5+57.2 | 1.5 | P170 | CRT | J | 1.0 | 3 |
| 158 | DA | 5+60.2 | 1.5 | P170 | CRT | J | 1.0 | 3 |
| 159 | DA | 5+63.3 | 1.5 | P170 | CRT | J | 1.0 | 3 |
| 160 | DA | 5+64.2 | 1.5 | P170 | CRT | J | 1.0 | 3 |
| 161 | DA | 2+59 | 1 | P170 | CRT | J | 3.0 | 24 |

| Defect ID No. | Asset Type | Defect Station | Fac. Sec. | Defect Type | Repair Type | Length (m) |
|---|---|---|---|---|---|---|
| 44 | DA | 1+85.3 | P170 | FRS | K | 0.9 |

## REPAIR SCHEDULE

| Defect ID No. | Asset Type | Defect Location Station | Defect Location Hor. Offset | Defect Location Ver. Offset | Fac. Sec. | Defect Type | Repair Type | Length (m) | Width (mm) |
|---|---|---|---|---|---|---|---|---|---|
| 50 | CA | 2+57.9 | 0.0 | 2.1 | P170 | CRV | L | 4.6 | 13 |
| 55 | CA | 2+65.8 | 2.7 | 1.5 | P170 | CRV | L | 3.0 | 25 |

| Defect ID No. | Asset Type | Defect Location Station | Defect Location Hor. Offset | Defect Location Ver. Offset | Fac. Sec. | Defect Type | Repair Type | Length (m) | Width (mm) | Depth (mm) |
|---|---|---|---|---|---|---|---|---|---|---|
| 53 | CA | 2+65.2 | 0.3 | 0.5 | P170 | CRV | M | 0.5 | 500 | 600 |

| Defect ID No. | Asset Type | Defect Location Station | Defect Location Ver. Offset | Fac. Sec. | Defect Type | Repair Type | Length (m) | Width (mm) | Depth (mm) |
|---|---|---|---|---|---|---|---|---|---|
| 51 | CA | 2+59.9 | 7.6 | P170 | MIS | N | 2.00 | 1000 | 1000 |

## BOLLARD CLEAN AND RECOAT SCHEDULE

| BOLLARD | CLEAN AND RECOAT | ADD I.D. | |
|---|---|---|---|
| P170–A | NEW | A | BID OPT 001 CLIN 0006 |
| P170–B | YES | B | |
| P170–C | YES | C | |
| P170–D | YES | D | |
| P170–E | YES | E | |
| P170–F | YES | F | |
| P170–G | YES | G | |
| P170–H | YES | H | |
| P170–I | YES | I | |
| P170–J | YES | J | |
| P170–K | YES | K | |
| P170–L | YES | L | |
| P170–M | NEW | M | BID OPT 002 CLIN 0007 |
| P170–N | YES | N | |
| P170–O | YES | O | |
| P170–P | YES | P | |
| P170–Q | YES | Q | |
| P170–R | YES | R | BID OPT 003 CLIN 0008 |
| P170–S | YES | S | |
| P170–T | YES | T | |
| P170–U | YES | U | |
| P170–V | YES | V | |
| P170–W | YES | W | |
| P170–X | YES | X | |
| P170–Y | YES | Y | |
| P170–Z | YES | Z | |
| P170–AA | N/A | N/A | |
| P170–BB | YES | BB | |
| P170–CC | YES | CC | |
| P170–DD | YES | DD | |
| P170–EE | YES | EE | |
| P170–FF | YES | FF | |
| ~~P170–GG~~ | ~~NEW~~ | ~~GG~~ | NOT IN CONTRACT |

1

NOTE:

BOLLARDS SHALL BE CLEANED AND RECOATED AS SPECIFIED IN SECTION 05 30 00 .01 MOORING HARDWARE.

A

REVISION NOTE: BID OPT 003 CLIN 0008

BOLLARD P170–R TO BE REPLACED THEREFORE, IT SHOULD READ "NEW".

## ASSET TYPE KEY

CA = CONCRETE CAISSON
DU = DECK UNDER
DA = DECK ABOVE
DC = DECK CURB
SW = SEAWALL

## DEFECT TYPE KEY

ABS = ABRAISON
CCS = CLOSED CORROSION SPALL
FRS = FRACTURE SPALL
VOD = VOID
OCS = OPEN CORROSION SPALL
CRD = DIAGONAL CRACK
CRH = HORIZONTAL CRACK
CRV = VERTICAL CRACK
CRL = LONGITUDINAL CRACK
CRT = TANGENTAL CRACK
DSG = DISINTEGRATION
WEA = WEATHERING
MIS = MISSING
UND = UNDERMINING
MDE = MORTAR DEGRADATION
BRK = BROKEN

## NOTES

1. DIMENSIONS IN SCHEDULE FOR AREA AND DEPTH INDICATE THE DIMENSIONS OF THE DEFECT. THE TOTAL BELOW HAS HAD A MINIMUM OF 30% ADDED TO THE AREA OR LENGTH FOR BIDDING.
2. REFER TO SHEETS S–101 TO S–106 FOR STATIONING AND DEFECT NUMBERS.
3. SEE SHEETS S–501 TO S–504 FOR REPAIR DETAILS.

## REPAIR QUANTITIES FOR BIDDING PURPOSES

| REPAIR | QUANTITY |
|---|---|
| A | 6.1m² |
| B | 1.5m² |
| C | 0.8m² |
| D | 3.0m² |
| E | 7.0m |
| F | 11.5m² |
| G | 105m |
| H | 3.4m |
| J | 187m |
| K | 1.2m |
| L | 10m |
| M | 0.2m³ |
| N | 3.25m³ |

| SYM | DESCRIPTION | DATE | APPR |
|---|---|---|---|
| 1 | REMOVE BOLLARD 170-GG 11/12/15 | | |
| A | REPLACE BOLLARD P170–R | 01/20/14 | CMR |

NAVFAC

COMMONWEALTH OF MASSACHUSETTS CHARLES MARSHALL ROBERTS CIVIL No. 50339 REGISTERED PROFESSIONAL ENGINEER 3/12/14 SEAL

CHILDS ENGINEERING CORPORATION
34 WILLIAM WAY BELLINGHAM, MASSACHUSETTS 02019 U.S.A.
Phone: (508) 966–9092
Fax: (508) 966–9096
E–mail: mail@childseng.com
A/E INFO

APPROVED
FOR COMMANDER NAVFAC
ACTIVITY
SATISFACTORY TO DATE
DES CMR DRW TEQ CHK CDS
BRANCH MANAGER
CHIEF ENG/ARCH

DEPARTMENT OF THE NAVY
NAVAL FACILITIES ENGINEERING COMMAND
NAVAL FACILITIES ENGINEERING COMMAND
FISC, AKASAKI TERMINAL
SASEBO, JAPAN
REPAIRS TO FUELING PIER 170
PAINT AND REPAIR SCHEDULE

SCALE: NONE
EPROJECT NO.:
CONSTR. CONTR. NO.
NAVFAC DRAWING NO. 10006574
SHEET 26 OF 26
S-601

DRAWFORM REVISION: 10 MARCH 2009