GENERAL DESCRIPTION OF WORK:

1. REMOVE EXISTING SALT WATER PIPING PARTIALLY AND PROVIDE NEW SALTWATER PIPING AS SHOWN.
2. REMOVE EXISTING OUTLET VALVE AND PROVIDE NEW OUTLET VALVE AS SHOWN
3. FILL EXISTING ABANDONEED UNDERGROUND PIPES WITH AIR MORTAR AS SHOWN.
4. PROVIDE TRAFFIC LINES AFTER REMOVAL OF PAVING TO MATCH EXISITING LINES. (150W, APPROX 100M)

GENERAL NOTES:

1. THE CONTRACTOR SHALL BE RESPONSIBLE FOR VERIFICATION OF ALL DIMENSIONS AND EXISTING CONDITION BEFORE COMMENCEMENT OF WORK.
2. ALL WORK AND MATERIALS ARE NEW EXCEPT WHERE INDICATE.
3. UNLESS OTHERWISE INDICATED, SIZES AND DIMENSIONS ARE IN MILLIMETER.
4. THE QUANTITY OF TRAFFIC LINE IS FOR BID PURPOSE ONLY.

ABBREVIATIONS:

&	AND	HP	HUME CONCRETE PIPE
±	APPROXIMATELY	L	LENGTH
AC	ASPHALT CONCRETE	MH	MAN HOLE
BLDG	BUILDING	MIN	MINIMUM
COM	COMMUNICATION	N	NUMBER
CONC	CONCRETE	OC	ON CENTER
D	DEPTH	PAVE	PAVEMENT
DIP	DUCTILE IRON PIPE	@	PITCH
DWG	DRAWING	R	RADIUS
ø, DIA	DIAMETER	S	SQUARE MEASURE
EA	EACH	THK	THICKNESS
EC	EARTH COVERING	TYP	TYPICAL
ELEC	ELECTRICAL	U/N	UNDER GROUND
EW	EACH WAY	V	VOLUME
EXST	EXISTING	VU	RIGID POLYVINYL CHLORIDE PIPE
FH	PROMOTION FORMATION HEIGHT	W	WIDTH
GALV	GALVANIZED	W/	WITH
GL	GROUND LEVEL		
GH	EXST GROUND HEIGHT		
H	HEIGHT		
HDPE	HIGH-DENSITY POLYETHYLENE		
HH	HAND HOLE		
INV	INVERT		

SYMBOLS:

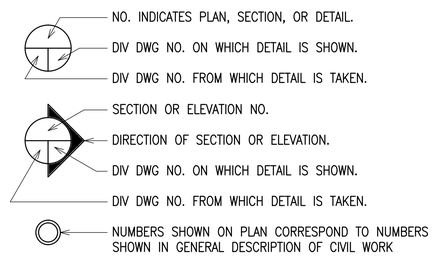

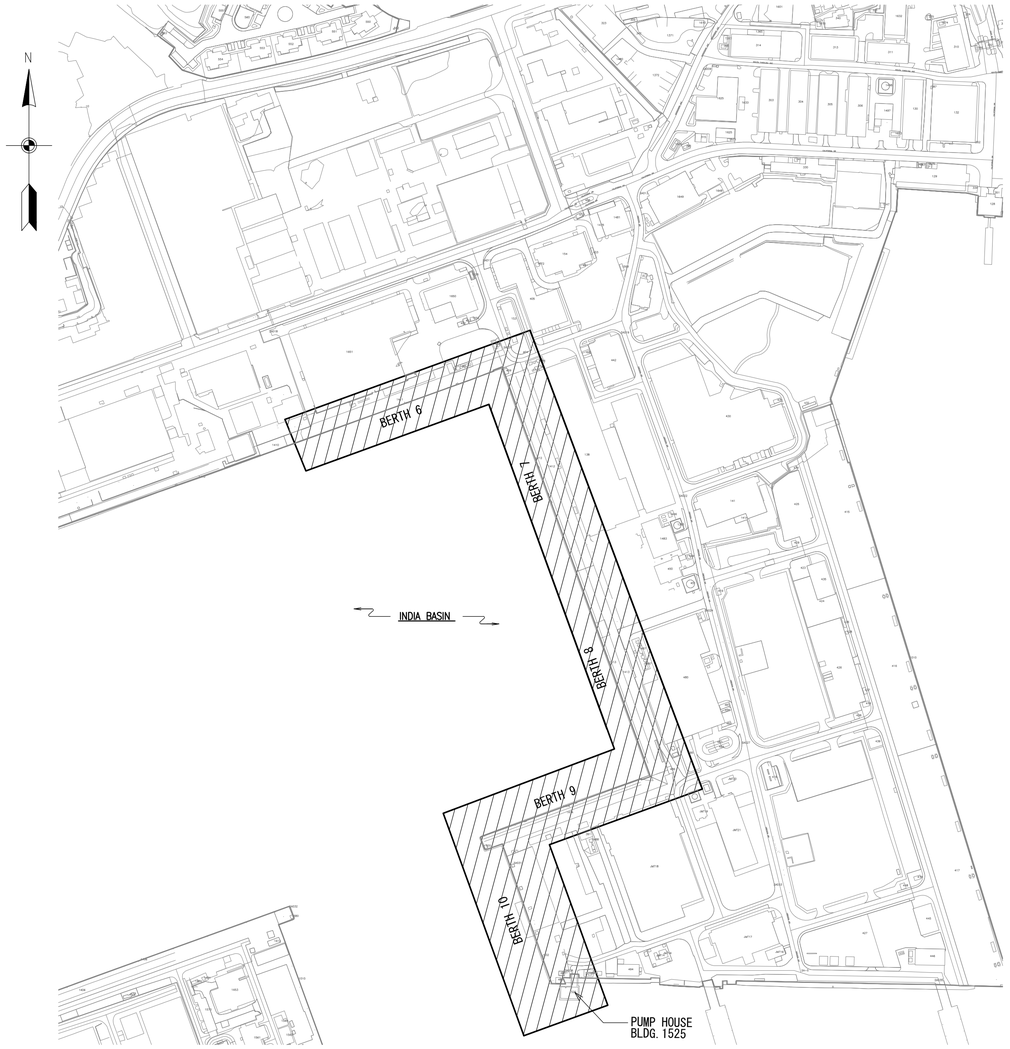

LOCATION MAP

NOT TO SCALE

LEGEND :

	EXST	NEW
SALT WATER LINE	SW	SW
STORM DRAIN LINE	D	
SEWER DRAIN LINE	S	
ELECTRICAL LINE	E	
COMMUNICATION LINE	TEL	
STEAM LINE	ST	
COMPRESSED AIR LINE	A	
WATER LINE	P	
SALT WATER VALVE		
OUTLET GATE VALVE		
OUTLET ANGLE VALVE		
AC PAVE	A C	
CONC PAVE	CON	
GRAVEL	GRA	
PROFILE NUMBER		NO.1

NO.	DESCRIPTION	DATE	APPR

NAVFAC

SEAL

A/E INFO

APPROVED

DATE / /

FOR COMMANDER NAVFAC

ACTIVITY

SATISFACTORY TO DATE

DES	S.K	DRW		CHK	H.A
PM/DM	H.TSUKADA				
BRANCH MANAGER	H.TSUKADA				
CHIEF ENG/ARCH	S.KUMAGAI				
DATE	11/08/2015				

DEPARTMENT OF THE NAVY
NAVAL FACILITIES ENGINEERING COMMAND
CAPITAL IMPROVEMENTS
NAVAL FACILITIES ENGINEERING COMMAND FAR EAST
YOKOSUKA, JAPAN
COMMANDER FLEET ACTIVITIES
SASEBO, JAPAN

C50061 REPAIR SALTWATER PIPING AT INDIA BASIN 6 TO BLDG.1525

GENERAL DESCRIPTION OF WORK AND LOCATION MAPS

SCALE:	AS NOTED
EPROJECT NO.:	1371550
CONSTR. CONTR. NO.	
NAVFAC DRAWING NO.	17171416
SHEET	1 OF 14

C1

PAPER SIZE: 841mm x 594mm
SRN-NO.:

DRAWFORM REVISION: 10 MARCH 2009
PW DWG. NO.:

MATCH LINE

MATCH LINE

N

INDIA BASIN

BERTH #10

③ ABANDON EXST U/G SALT WATER PIPING ø400DIP

① U/G SALT WATER PIPING ø400HDPE SEE, 1 C2 C13

ø200HP

ø300HP

BOLLARD

CONTAINER

CONTAINER

BLDG.493

BLDG.497

BLDG.492

1400±

① U/G SALT WATER 45°BENT-PIPE ø400

3200±

NO.2

EXST GATE FENCE

① SALT WATER FLANGE ADAPTER ø400

EXST PIT

NO.1

① REMOVE AND PROVIDE SALT WATER PIPING ENLARGE PLAN SEE, 1 C2 C11

TRASH BOX

BLDG.1525 (PUMP HOUSE)

SITE PLAN-1

Scale 1:200

1/200

0 5000 10000 20000 30000

7 6 5 4 3 2 1 SITE PLAN-1

KEY PLAN

MK	DESCRIPTION	DATE	APPR

NAVFAC

SEAL

A/E INFO.

APPROVED

DATE / /

FOR COMMANDER NAVFAC

ACTIVITY

SATISFACTORY TO DATE

DES	S.K	DRW		CHK	H.A

PM/DM H.TSUKADA

BRANCH MANAGER H.TSUKADA

CHIEF ENG/ARCH S.KUMAGAI

DATE 11/08/2015

DEPARTMENT OF THE NAVY
NAVAL FACILITIES ENGINEERING COMMAND
CAPITAL IMPROVEMENTS
NAVAL FACILITIES ENGINEERING COMMAND FAR EAST
YOKOSUKA, JAPAN
COMMANDER FLEET ACTIVITIES
SASEBO, JAPAN

C50061 REPAIR SALTWATER PIPING AT INDIA BASIN 6 TO BLDG.1525

SITE PLAN-1

SCALE: AS NOTED

EPROJECT NO.: 1371550

CONSTR. CONTR. NO.

NAVFAC DRAWING NO.
17171417

SHEET 2 OF 14

C2

PAPER SIZE: 841mm x 594mm
SRN-NO.:

DRAWFORM REVISION: 10 MARCH 2009
PW DWG. NO.:

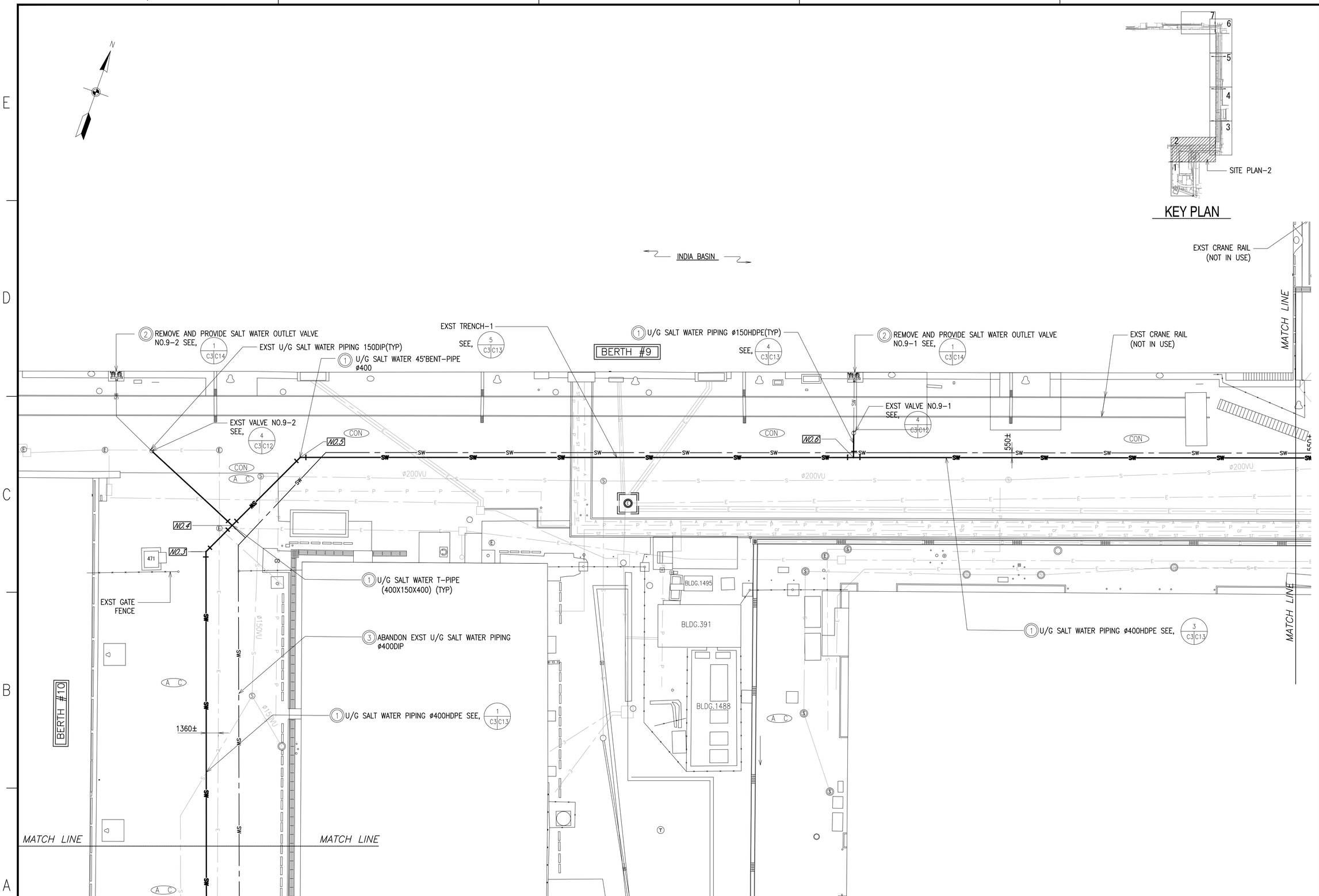

KEY PLAN

SITE PLAN-2

Scale 1:200

1/200 0 5000 10000 20000 30000

APPR	
DATE	
DESCRIPTION	
SYM	

NAVFAC

SEAL

A/E INFO

APPROVED

DATE / /

FOR COMMANDER NAVFAC

ACTIVITY

SATISFACTORY TO DATE

DES	S.K	DRW		CHK	H.A
PM/DM	H.TSUKADA				
BRANCH MANAGER	H.TSUKADA				
CHIEF ENG/ARCH	S.KUMAGAI				
DATE	11/08/2015				

DEPARTMENT OF THE NAVY
NAVAL FACILITIES ENGINEERING COMMAND
CAPITAL IMPROVEMENTS

NAVAL FACILITIES ENGINEERING COMMAND FAR EAST
YOKOSUKA, JAPAN
COMMANDER FLEET ACTIVITIES
SASEBO, JAPAN

C50061 REPAIR SALTWATER PIPING AT INDIA BASIN 6
TO BLDG.1525

SITE PLAN-2

SCALE:	AS NOTED
EPROJECT NO.:	1371550
CONSTR. CONTR. NO.	
NAVFAC DRAWING NO.	17171418
SHEET	3 OF 14

C3

PAPER SIZE: 841mm x 594mm
SRN-NO.:

DRAWFORM REVISION: 10 MARCH 2009
PW DWG. NO.:

MATCH LINE

MATCH LINE

EXST U/G SALT WATER PIPING ø150DIP(TYP)

(2) REMOVE AND PROVIDE SALT WATER OUTLET VALV NO.8-2
SEE, 1 C4|C14

EXST VALVE NO.8-2
SEE, 4 C4|C12

(1) U/G SALT WATER PIPING ø400HDPE
SEE, 3 C4|C13

(3) ABANDON EXST U/G SALTWATER PIPING ø400DIP

EXST VALVE NO.8-3
SEE, 4 C4|C12

(2) REMOVE AND PROVIDE SALT WATER OUTLET VALV NO.8-3
SEE, 1 C4|C14

(1) U/G SALT WATER PIPING ø150HDPE(TYP)
SEE, 4 C4|C13

(1) UG SALT WATER T-PIPE (400X150X400) (TYP)

EXST CRANE RAIL (NOT IN USE)

EXST CONC DITCH

EXST GATE FENCE

(1) U/G SALT WATER 90°BENT-PIPE

(S) A C

(S) U/G SALT WATER T-PIPE(400X400X400)
FOR OTHER PROJECT CONECTION POINT W/PLUG

NO.9

NO.8

NO.7

INDIA BASIN

BERTH #8

CON

SW

AS

E/C

1100±

550±

3000±

EXST CRANE RAIL (NOT IN USE)

MATCH LINE

MATCH LINE

MATCH LINE

SITE PLAN-3
Scale 1:200

1/200 0 5000 10000 20000 30000

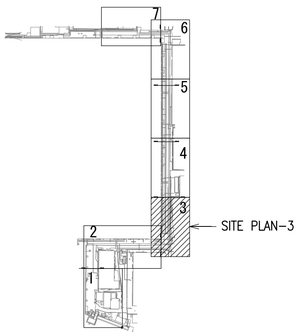

KEY PLAN

APPR	DATE	DESCRIPTION	MK

NAVFAC

SEAL

A/E INFO

APPROVED

DATE / /

FOR COMMANDER NAVFAC

ACTIVITY

SATISFACTORY TO DATE

DES	S.K	DRW		CHK	H.A

PM/DM	H.TSUKADA
BRANCH MANAGER	H.TSUKADA
CHIEF ENG/ARCH	S.KUMAGAI
DATE	11/08/2015

DEPARTMENT OF THE NAVY
NAVAL FACILITIES ENGINEERING COMMAND FAR EAST
YOKOSUKA, JAPAN
CAPITAL IMPROVEMENTS
COMMANDER FLEET ACTIVITIES
SASEBO, JAPAN

C50061 REPAIR SALTWATER PIPING AT INDIA BASIN 6 TO BLDG.1525

SITE PLAN-3

SCALE:	AS NOTED
EPROJECT NO.:	1371550
CONSTR. CONTR. NO.	
NAVFAC DRAWING NO.	17171419
SHEET	4 OF 14

C4

PAPER SIZE: 841mm x 594mm
SRN-NO.:

DRAWFORM REVISION: 10 MARCH 2009
PW DWG. NO.:

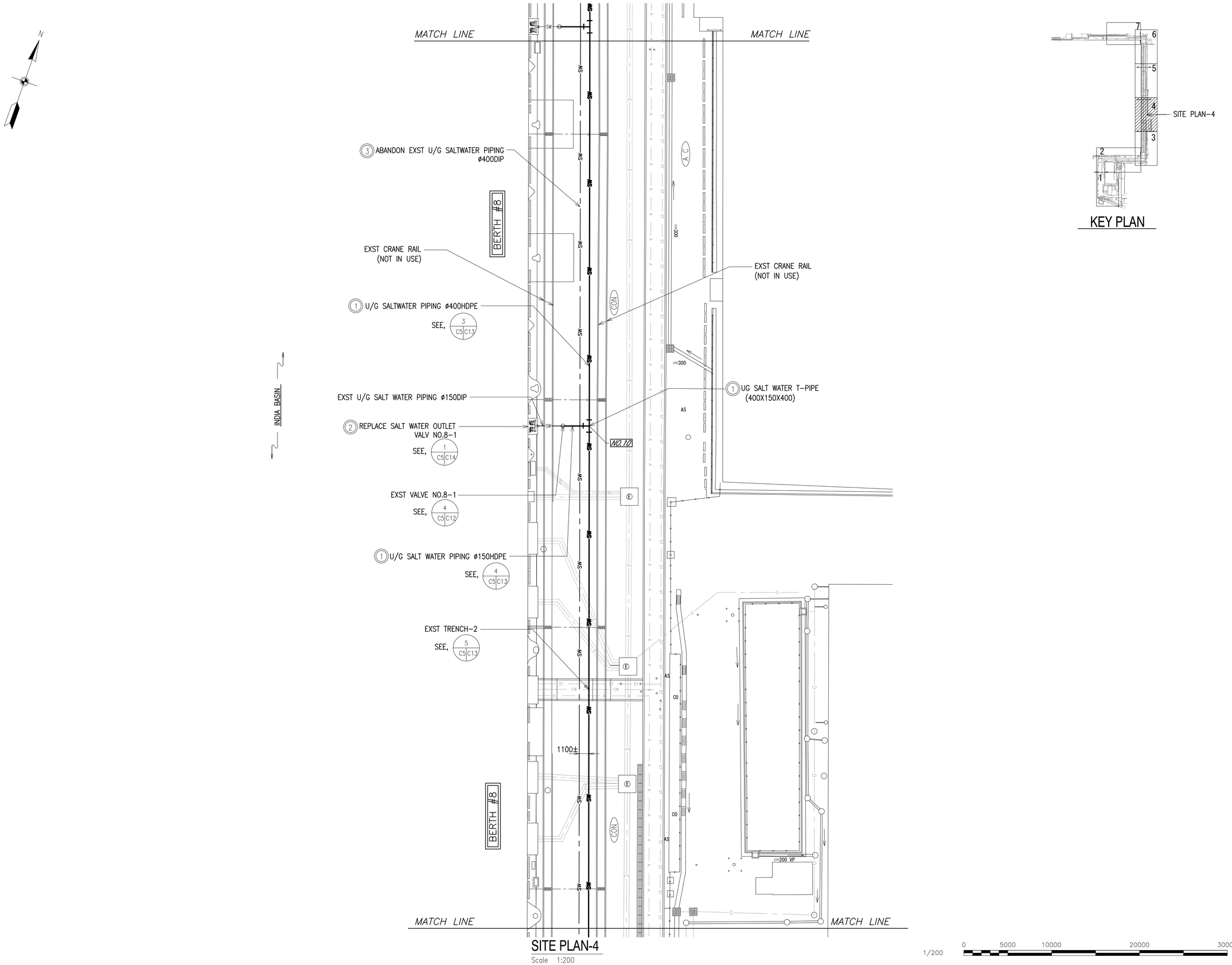

SITE PLAN-4

Scale 1:200

KEY PLAN

1/200 0 5000 10000 20000 30000

APPR. | DATE | DESCRIPTION | NO.

NAVFAC

SEAL

A/E INFO

APPROVED

DATE / /

FOR COMMANDER NAVFAC

ACTIVITY

SATISFACTORY TO DATE

DES	S.K	DRW		CHK	H.A
PM/DM	H.TSUKADA				
BRANCH MANAGER	H.TSUKADA				
CHIEF ENG/ARCH	S.KUMAGAI				
DATE	11/08/2015				

DEPARTMENT OF THE NAVY
NAVAL FACILITIES ENGINEERING COMMAND
NAVAL FACILITIES ENGINEERING COMMAND FAR EAST
YOKOSUKA, JAPAN
CAPITAL IMPROVEMENTS
COMMANDER FLEET ACTIVITIES
SASEBO, JAPAN

C50061 REPAIR SALTWATER PIPING AT INDIA BASIN 6 TO BLDG.1525

SITE PLAN-4

SCALE:	AS NOTED
EPROJECT NO.:	1371550
CONSTR. CONTR. NO.	
NAVFAC DRAWING NO.	17171420
SHEET	5 OF 14

C5

PAPER SIZE: 841mm x 594mm
SRN-NO.:

DRAWFORM REVISION: 10 MARCH 2009
PW DWG. NO.:

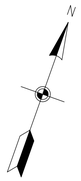

MATCH LINE

MATCH LINE

EXST TRENCH-3
SEE, 5 C6|C13

EXST CRANE RAIL
(NOT IN USE)

EXST VALVE NO.7-2
SEE, 4 C6|C12

(2) REMOVE AND PROVIDE SALT WATER OUTLET VALV NO.7-2
SEE, 1 C6|C14

INDIA BASIN

EXST U/G SALT WATER PIPING ø150DIP(TYP)

NO.12

BERTH #7

1100±

(3) ABANDON EXST U/G SALTWATER PIPING ø400DIP

(1) U/G SALT WATER PIPING ø400HDPE
SEE, 3 C6|C13

(1) U/G SALT WATER PIPING ø150HDPE(TYP)
SEE, 4 C6|C13

EXST VALVE NO.7-3
SEE, 4 C6|C12

(2) REMOVE AND PROVIDE SALT WATER OUTLET VALV NO.7-3
SEE, 1 C6|C14

(1) UG SALT WATER T-PIPE (400X150X400)

NO.11

MATCH LINE

MATCH LINE

SITE PLAN-5

Scale 1:200

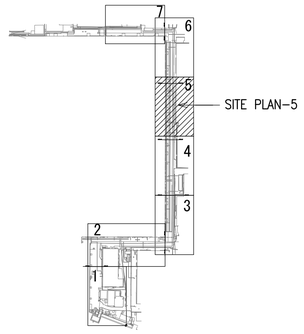

KEY PLAN

1/200 0 5000 10000 20000 30000

NO.	DESCRIPTION	DATE	APPR

NAVFAC

SEAL

A/E INFO

APPROVED

DATE / /

FOR COMMANDER NAVFAC

ACTIVITY

SATISFACTORY TO DATE

DES	S.K	DRW		CHK	H.A

PM/DM H.TSUKADA

BRANCH MANAGER H.TSUKADA

CHIEF ENG/ARCH S.KUMAGAI

DATE 11/08/2015

DEPARTMENT OF THE NAVY
NAVAL FACILITIES ENGINEERING COMMAND
YOKOSUKA, JAPAN
NAVAL FACILITIES ENGINEERING COMMAND FAR EAST
CAPITAL IMPROVEMENTS
COMMANDER FLEET ACTIVITIES
SASEBO, JAPAN

C50061 REPAIR SALTWATER PIPING AT INDIA BASIN 6 TO BLDG.1525

SITE PLAN-5

SCALE: AS NOTED

EFPROJECT NO.: 1371550

CONSTR. CONTR. NO.

NAVFAC DRAWING NO.
17171421

SHEET 6 OF 14

C6

PAPER SIZE: 841mm x 594mm
SRN-NO.:

DRAWFORM REVISION: 10 MARCH 2009
PW DWG. NO.:

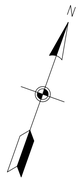

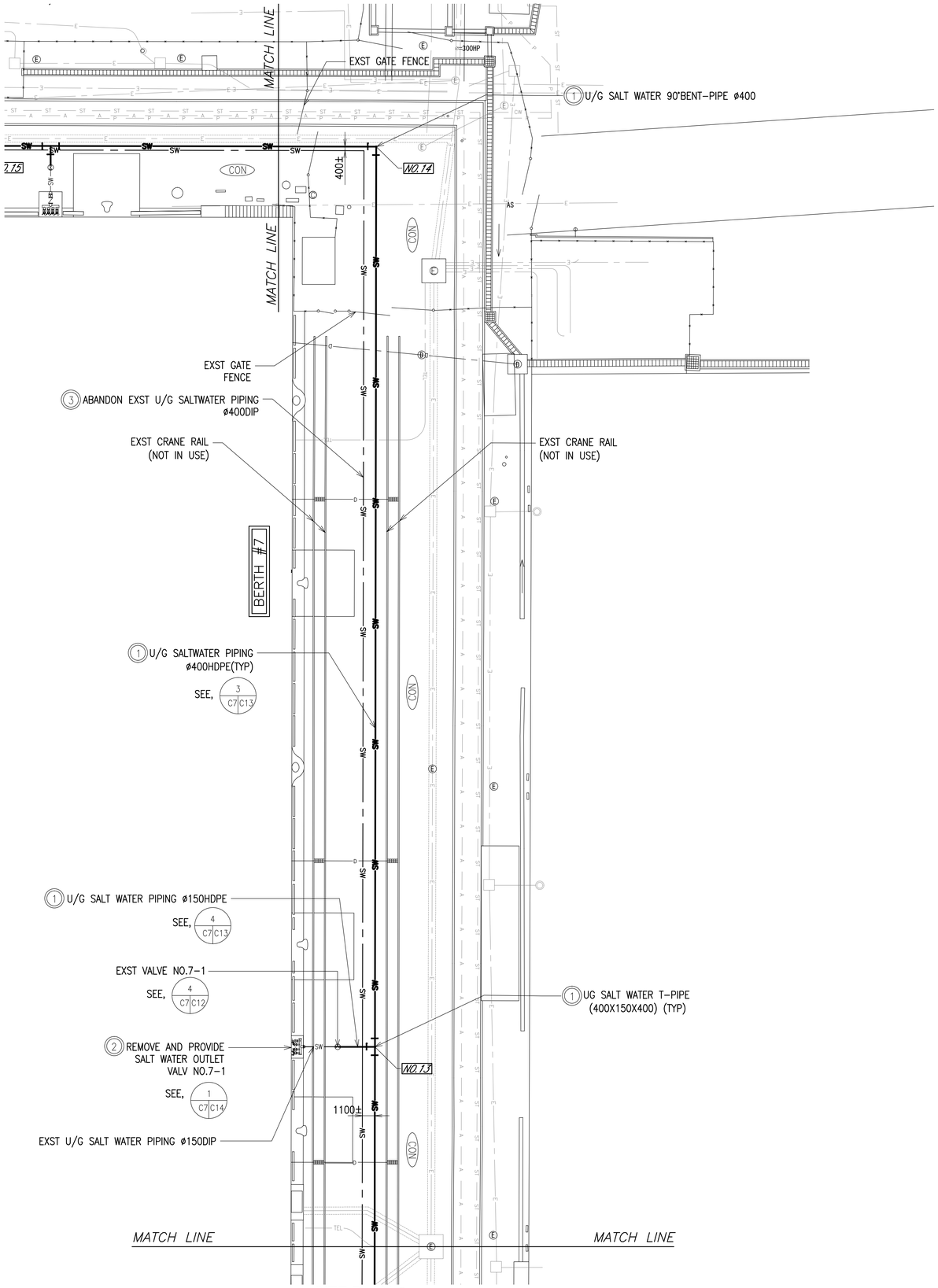

SITE PLAN-6

Scale 1:200

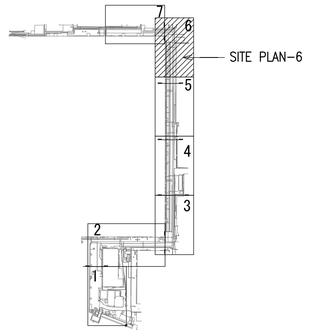

KEY PLAN

1/200 0 5000 10000 20000 30000

APPR	
DATE	
DESCRIPTION	
NO.	

NAVFAC

SEAL

A/E INFO

APPROVED

DATE / /

FOR COMMANDER NAVFAC

ACTIVITY

SATISFACTORY TO DATE DD/MM/YY

DES	S.K	DRW		CHK	H.A

PM/DM H.TSUKADA

BRANCH MANAGER H.TSUKADA

CHIEF ENG/ARCH S.KUMAGAI

DATE 11/08/2015

DEPARTMENT OF THE NAVY
NAVAL FACILITIES ENGINEERING COMMAND
NAVAL FACILITIES ENGINEERING COMMAND FAR EAST
YOKOSUKA, JAPAN
CAPITAL IMPROVEMENTS
COMMANDER FLEET ACTIVITIES
SASEBO, JAPAN

C50061 REPAIR SALTWATER PIPING AT INDIA BASIN 6 TO BLDG.1525

SITE PLAN-6

SCALE: AS NOTED

EPROJECT NO.: 1371550

CONSTR. CONTR. NO.

NAVFAC DRAWING NO. 17171422

SHEET 7 OF 14

C7

PAPER SIZE: 841mm x 594mm

SRN-NO.:

DRAWFORM REVISION: 10 MARCH 2009

PW DWG. NO.:

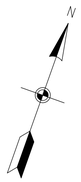

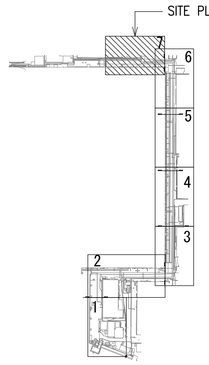

KEY PLAN

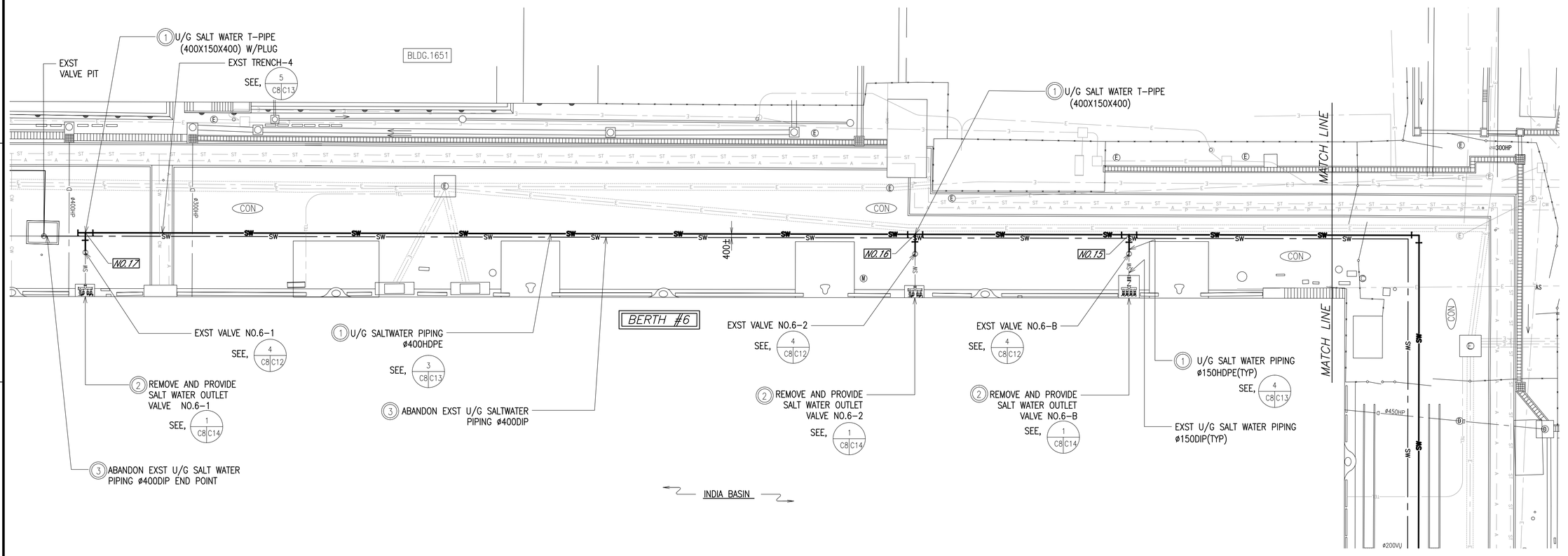

SITE PLAN-7

Scale 1:200

1/200 0 5000 10000 20000 30000

APPR	DATE	DESCRIPTION	MK

NAVFAC

SEAL

A/E INFO

APPROVED

DATE / /

FOR COMMANDER NAVFAC

ACTIVITY

SATISFACTORY TO DATE

DES	S.K	DRW	CHK	H.A
PM/DM	H.TSUKADA			
BRANCH MANAGER	H.TSUKADA			
CHIEF ENG/ARCH	S.KUMAGAI			
DATE	11/08/2015			

DEPARTMENT OF THE NAVY
NAVAL FACILITIES ENGINEERING COMMAND
YOKOSUKA, JAPAN
NAVAL FACILITIES ENGINEERING COMMAND FAR EAST
COMMANDER FLEET ACTIVITIES
SASEBO, JAPAN
CAPITAL IMPROVEMENTS

C50061 REPAIR SALTWATER PIPING AT INDIA BASIN 6
TO BLDG.1525

SITE PLAN-7

SCALE:	AS NOTED
EPROJECT NO.:	1371550
CONSTR. CONTR. NO.	
NAVFAC DRAWING NO.	17171423
SHEET	8 OF 14

C8

PAPER SIZE: 841mm x 594mm
SRN-NO.:

DRAWFORM REVISION: 10 MARCH 2009
PW DWG. NO.:

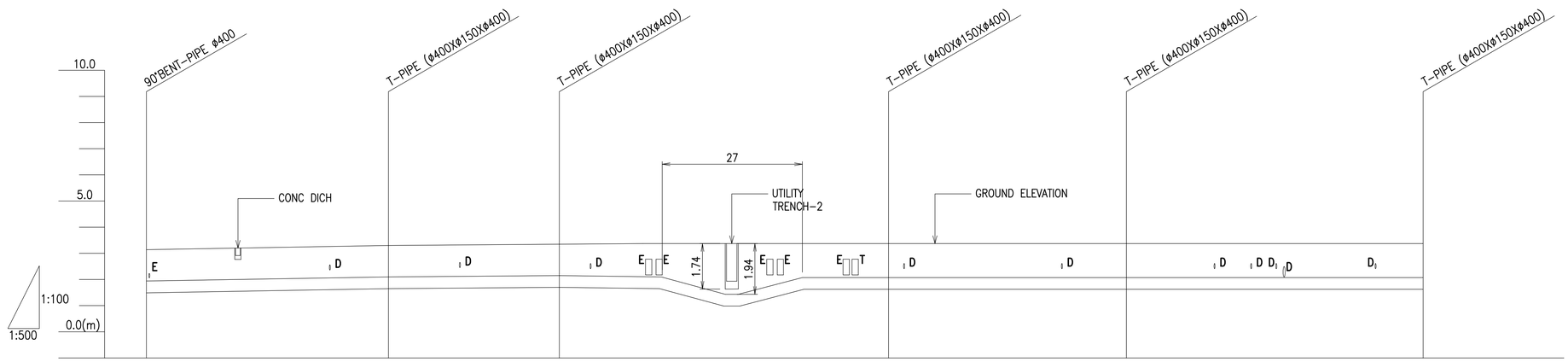

ITEM	CON					
PIPE DIA (m)	SALT WATER PIPING ø400HDPE					
GROUND ELEVATION (m)	3.14	3.30	3.35	3.35	3.35	3.34
EARTH COVERING (m)	1.2	1.2	1.2	1.3	1.3	1.3
SECTION DISTANCE (m)	56.90	46.30	32.70	63.00	45.50	56.80
ADDITIONAL DISTANCE (m)	247.10	293.40	326.10	389.10	434.60	491.40
STATION	NO.7	NO.8	NO.9	NO.10	NO.11	NO.12

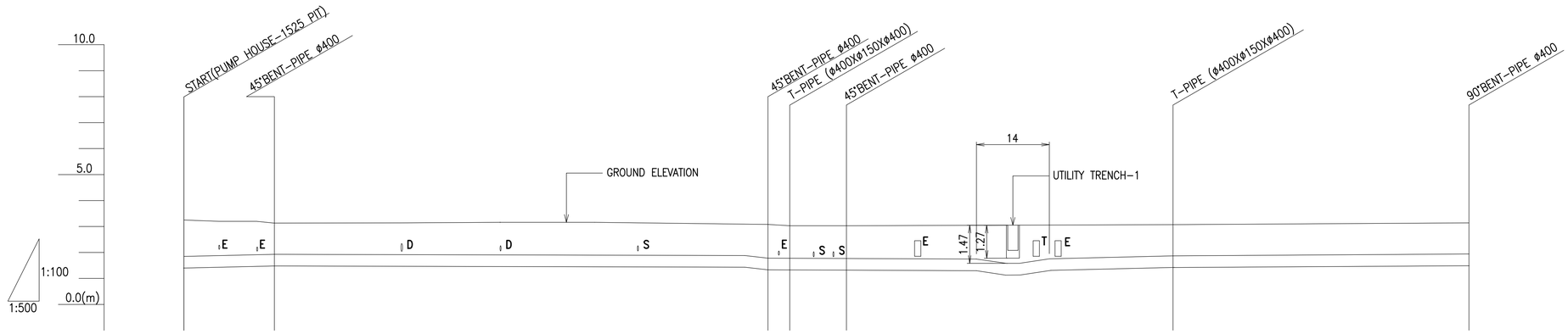

ITEM	AC				CON		
PIPE DIA (m)	SALT WATER PIPING ø400HDPE						
GROUND ELEVATION (m)	3.25	3.13	3.08	3.03	3.03	3.07	3.14
EARTH COVERING (m)	1.4	1.2	1.3	1.3	1.3	1.2	1.2
SECTION DISTANCE (m)	00.00	17.40	94.90	4.20	10.90	62.80	56.90
ADDITIONAL DISTANCE (m)	0.00	17.40	112.30	116.50	127.40	190.20	247.10
STATION	NO.1	NO.2	NO.3	NO.4	NO.5	NO.6	NO.7

LEGEND :

ITEM	SYMBOL
AC PAVEMENT AREA	AC
CO PAVEMENT AREA	CON
E: ELECTRICAL	E
T: COMMUNICATION LINE	T
D: STORM DRAIN	D
S: SEWER LINE	S

PROFILE-1

Scale 1:100 /1:500

1/100 1000 0 1000 5000 10000

1/500 10000 0 10000 50000 70000

SYM	DESCRIPTION	DATE	APPR

NAVFAC

SEAL

A/E INFO

APPROVED

DATE / /

FOR COMMANDER NAVFAC

ACTIVITY

SATISFACTORY TO DATE

DES S.K DRW CHK H.A

PM/DM H.TSUKADA

BRANCH MANAGER H.TSUKADA

CHIEF ENG/ARCH S.KUMAGAI

DATE 11/08/2015

DEPARTMENT OF THE NAVY NAVAL FACILITIES ENGINEERING COMMAND

NAVAL FACILITIES ENGINEERING COMMAND FAR EAST

YOKOSUKA, JAPAN

CAPITAL IMPROVEMENTS

COMMANDER FLEET ACTIVITIES SASEBO, JAPAN

C50061 REPAIR SALTWATER PIPING AT INDIA BASIN 6 TO BLDG.1525

PROFILE-1

SCALE: AS NOTED

EPROJECT NO.: 1371550

CONSTR. CONTR. NO.

NAVFAC DRAWING NO. 17171424

SHEET 9 OF 14

C9

PAPER SIZE: 841mm x 594mm

SRN-NO.:

DRAWFORM REVISION: 10 MARCH 2009

PW DWG. NO.:

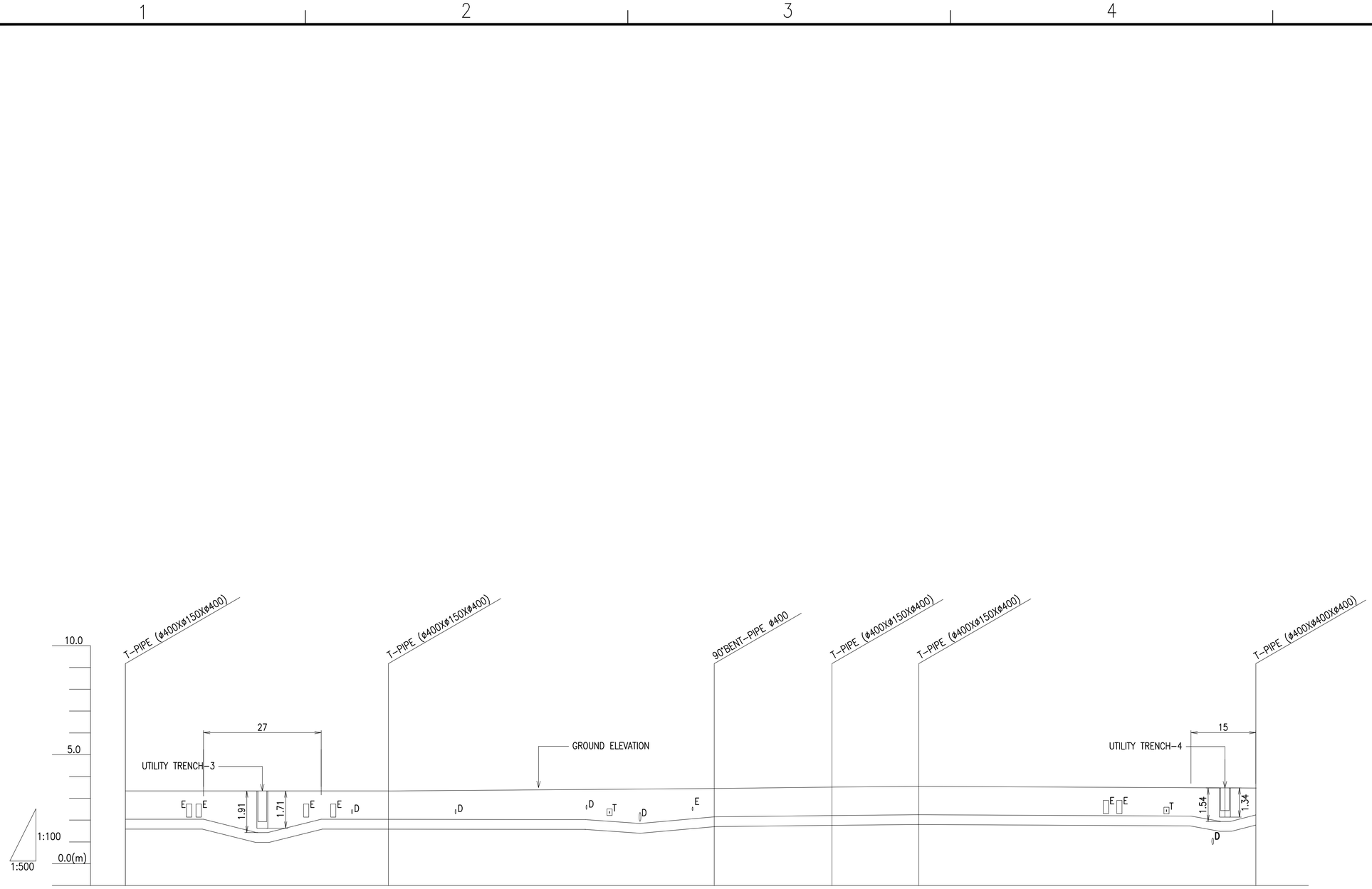

ITEM							
PIPE DIA (m)	CON	SALT WATER PIPING Φ400HDPE					
GROUND ELEVATION (m)	3.34	3.35	3.45	3.55	3.59	3.53	
EARTH COVERING (m)	1.3	1.3	1.3	1.3	1.3	1.3	
SECTION DISTANCE (m)	56.80	60.30	74.70	27.00	19.90	77.30	
ADDITIONAL DISTANCE (m)	491.40	551.70	626.40	653.40	673.30	750.60	
STATION	W2.72	W2.73	W2.74	W2.75	W2.76	W2.77	

LEGEND :

ITEM	SYMBOL
AC PAVEMENT AREA	AC
CO PAVEMENT AREA	CON
E: ELECTRICAL	E
T: COMMUNICATION LINE	T
D: STORM DRAIN	D
S: SEWER LINE	S

PROFILE-2
Scale 1:100 /1:500

1/100 1000 0 1000 5000 10000

1/500 10000 0 10000 50000 70000

PAPER SIZE: 841mm x 594mm
SRN-NO.:

DRAWFORM REVISION: 10 MARCH 2009
PW DWG. NO.:

NO.	DESCRIPTION	DATE	APPR

SEAL

A/E INFO

APPROVED
DATE / /
FOR COMMANDER NAVFAC

ACTIVITY

SATISFACTORY TO DATE

DES	S.K	DRW		CHK	H.A
PM/DM	H.TSUKADA				
BRANCH MANAGER	H.TSUKADA				
CHIEF ENG/ARCH	S.KUMAGAI				
DATE	11/08/2015				

DEPARTMENT OF THE NAVY
NAVAL FACILITIES ENGINEERING COMMAND
NAVAL FACILITIES ENGINEERING COMMAND FAR EAST
YOKOSUKA, JAPAN
CAPITAL IMPROVEMENTS
COMMANDER FLEET ACTIVITIES
SASEBO, JAPAN

C50061 REPAIR SALTWATER PIPING AT INDIA BASIN 6 TO BLDG.1525

PROFILE-2

SCALE:	AS NOTED
EPROJECT NO.:	1371550
CONSTR. CONTR. NO.	
NAVFAC DRAWING NO.	17171425
SHEET	10 OF 14

C10

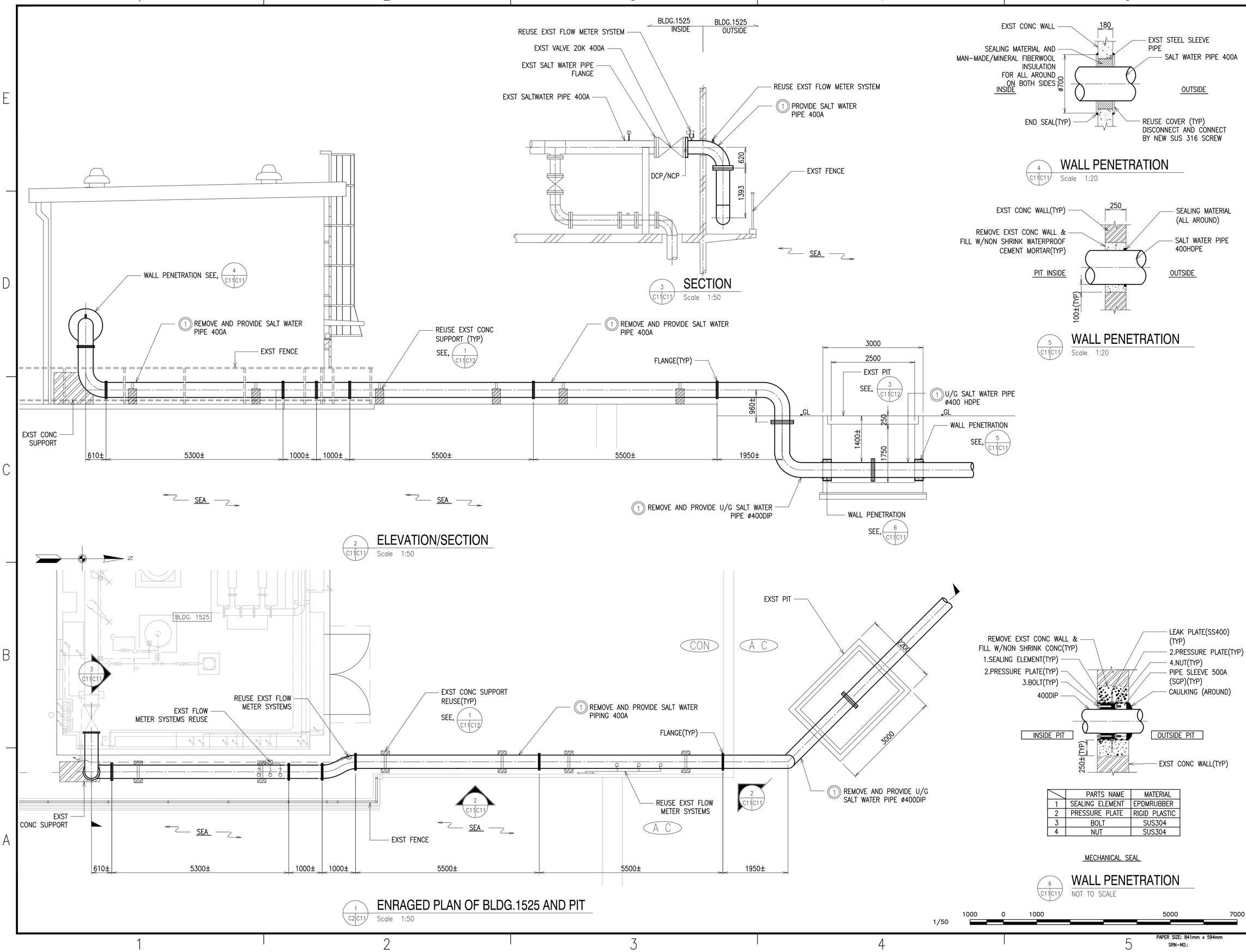

	PARTS NAME	MATERIAL
1	SEALING ELEMENT	EPDMRUBBER
2	PRESSURE PLATE	RIGID PLASTIC
3	BOLT	SUS304
4	NUT	SUS304

APPR		
DATE		
DESCRIPTION		
SYM		

NAVFAC

SEAL

A/E INFO

APPROVED
DATE / /
FOR COMMANDER NAVFAC

ACTIVITY

SATISFACTORY TO DATE

DES	S.K	DRW		CHK	H.A
PM/DM	H.TSUKADA				
BRANCH MANAGER	H.TSUKADA				
CHIEF ENG/ARCH	S.KUMAGAI				
DATE	11/08/2015				

DEPARTMENT OF THE NAVY
NAVAL FACILITIES ENGINEERING COMMAND
YOKOSUKA, JAPAN
CAPITAL IMPROVEMENTS
NAVAL FACILITIES ENGINEERING COMMAND FAR EAST
COMMANDER FLEET ACTIVITIES
SASEBO, JAPAN

C50061 REPAIR SALTWATER PIPING AT INDIA BASIN 6 TO BLDG.1525

DETAILS OF BLDG.1525

SCALE:	AS NOTED
EPROJECT NO.:	1371550
CONSTR. CONTR. NO.	
NAVFAC DRAWING NO.	17171426
SHEET	11 OF 14

C11

DRAWFORM REVISION: 10 MARCH 2009
PW DWG. NO.:

PAPER SIZE: 841mm x 594mm
SRN-NO.:

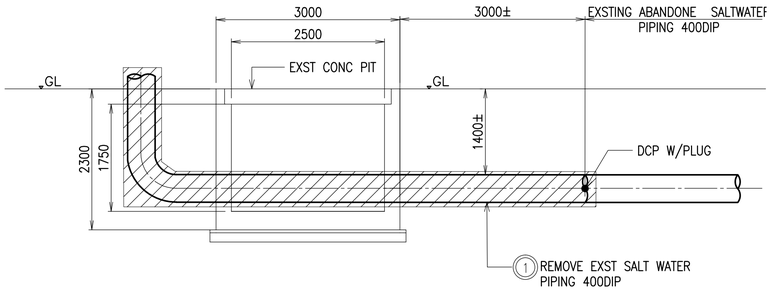

EXST

3 C11 C12 DETAIL OF EXST PIT

NOT TO SCALE

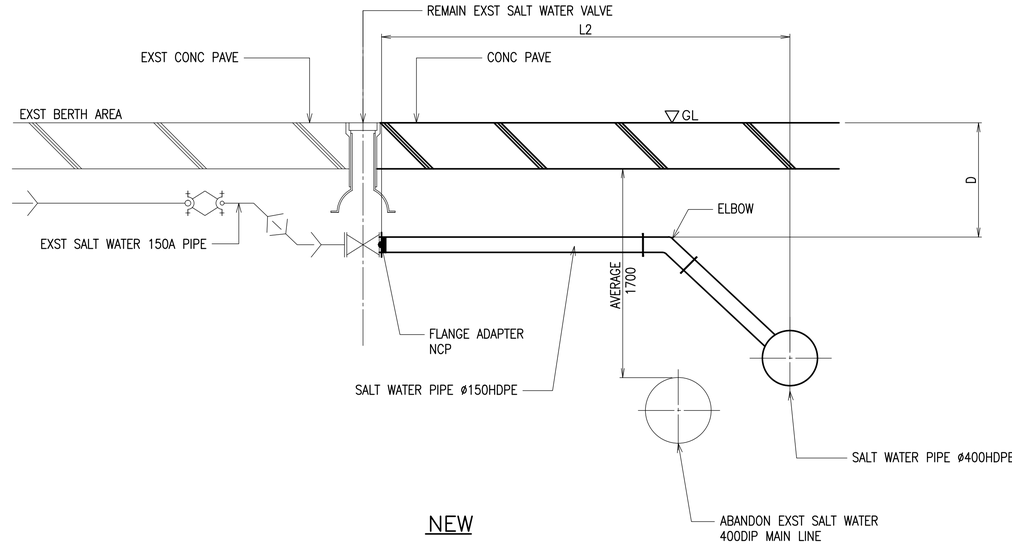

NEW

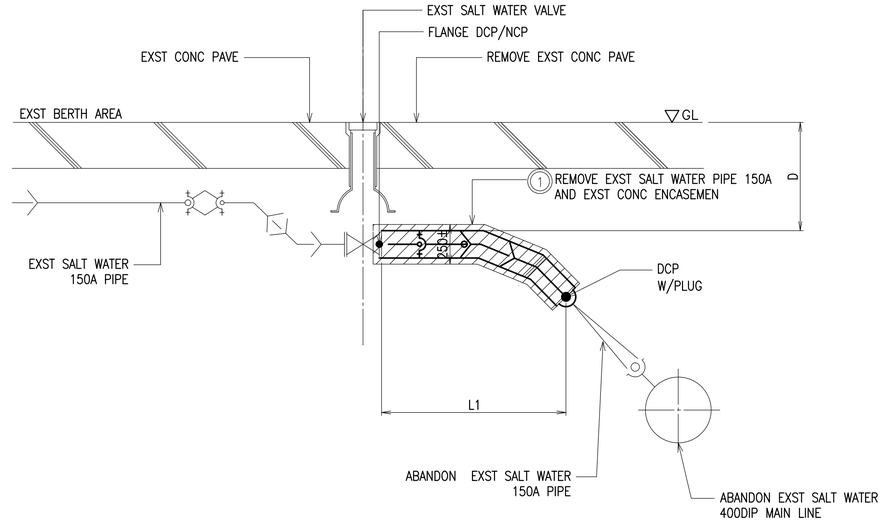

EXST

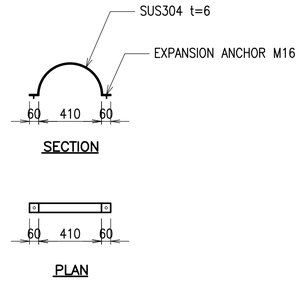

2 C12 C12 DETAIL OF BAND

NOT TO SCALE

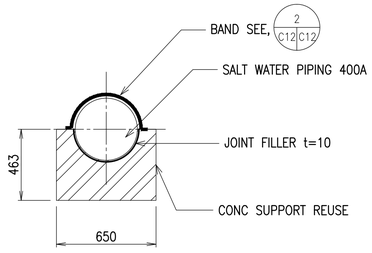

1 C11 C12 DETAIL OF CONC SUPPORT

NOT TO SCALE

LIST OF EXST SALT WATER SECTIONAL VALVE INFO

BERTH#	VALVE NO.	EXST VALVE DEPTH : D (mm)	BERTH PAVE		DISTANCE L1 (mm)	DISTANCE L2 (mm)
			KIND	THICK		
6	6−1	GL−1020	CONC	300	1500±	1850±
	6−2	GL−1130	CONC	300	1250±	1600±
	6−B	GL−1130	CONC	300	1200±	1550±
7	7−1	GL−1360	CONC	300	1600±	2700±
	7−2	GL−1470	CONC	300	1600±	2700±
	7−3	GL−1340	CONC	300	2200±	3300±
8	8−1	GL−1320	CONC	300	1680±	2800±
	8−2	GL−1270	CONC	300	1650±	2750±
	8−3	GL−1300	CONC	300	1900±	2800±
9	9−1	GL−1100	CONC	300	2230±	2500±
	9−2	GL−1030	CONC	300	12000±	14500±

4 C3 C12 DETAIL OF SALT WATER BRANCH LINE

NOT TO SCALE

C4 C5
C6 C7 C8

NO.	DESCRIPTION	DATE	APPR

NAVFAC

A/E INFO

APPROVED

DATE / /

FOR COMMANDER NAVFAC

ACTIVITY

SATISFACTORY TO DATE

DES	S.K	DRW		CHK	H.A

PM/DM H.TSUKADA

BRANCH MANAGER H.TSUKADA

CHIEF ENG/ARCH S.KUMAGAI

DATE 11/08/2015

DEPARTMENT OF THE NAVY
NAVAL FACILITIES ENGINEERING COMMAND
YOKOSUKA, JAPAN
NAVAL FACILITIES ENGINEERING COMMAND FAR EAST
SASEBO, JAPAN
CAPITAL IMPROVEMENTS
COMMANDER FLEET ACTIVITIES

C50061 REPAIR SALTWATER PIPING AT INDIA BASIN 6
TO BLDG.1525

DETAIL-2

SCALE: AS NOTED

EPROJECT NO.: 1371550

CONSTR. CONTR. NO.

NAVFAC DRAWING NO.
17171427

SHEET 12 OF 14

C12

PAPER SIZE: 841mm x 594mm
SRN-NO.:

DRAWFORM REVISION: 10 MARCH 2009
PW DWG. NO.:

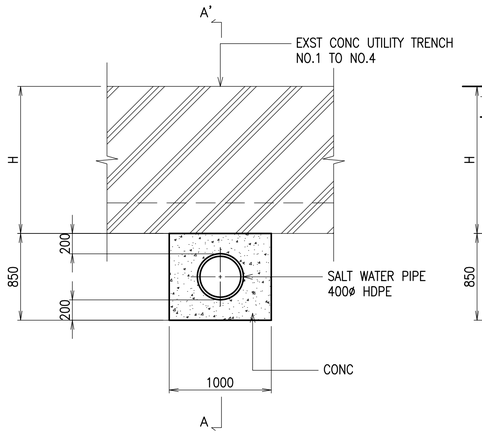

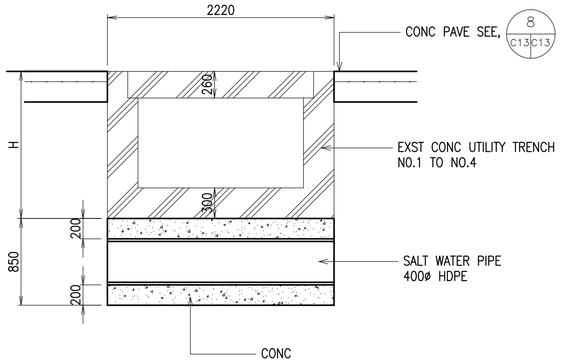

A–A'

TRENCH NO.	H
1	1270
2	1740
3	1710
4	1340

SCHEDULE OF UTILITY TRENCH

TYP SECTION FOR UTILITY TRENCH

5 C3 C13 — C5 C6 C8 — NOT TO SCALE

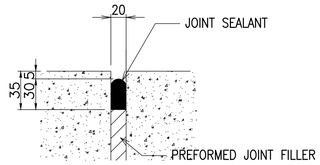

ENLARGED SECTION

10 C13 C13 — NOT TO SCALE

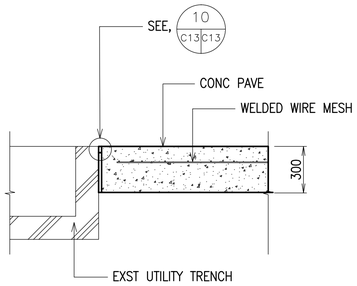

LONGITUDINAL FREE END

8 C13 C13 — NOT TO SCALE

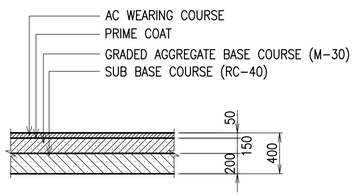

TYP SECTION OF AC PAVE

2 C13 C13 — NOT TO SCALE

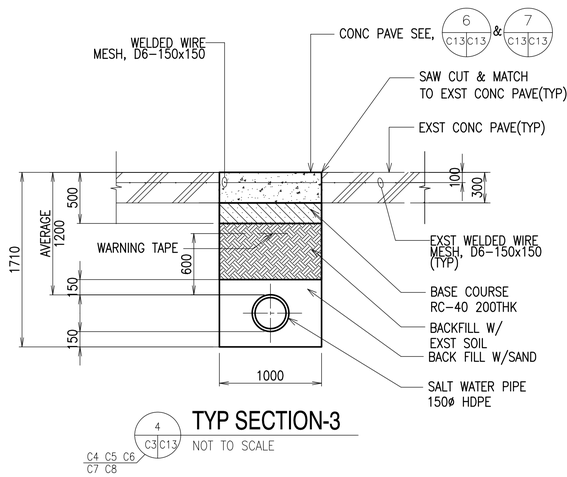

TYP SECTION-3

4 C3 C13 — C4 C5 C6 C7 C8 — NOT TO SCALE

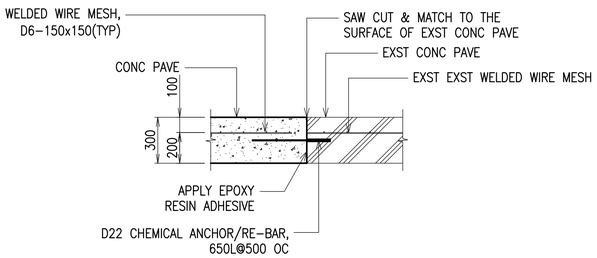

TRANSVERSE CONTRACTION JOINT

7 C13 C13 — NOT TO SCALE

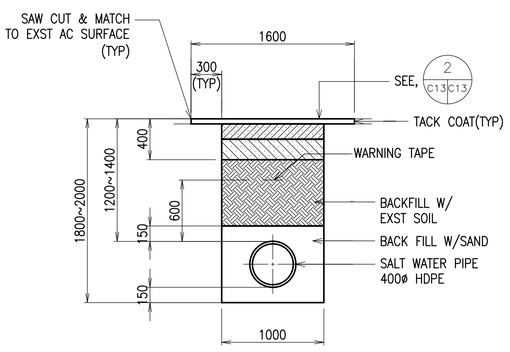

TYP SECTION-1

1 C2 C13 — C3 — NOT TO SCALE

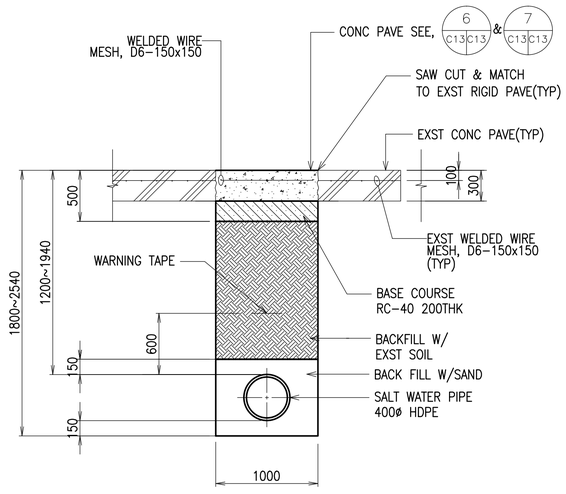

TYP SECTION-2

3 C3 C13 — C4 C5 C6 C7 C8 — NOT TO SCALE

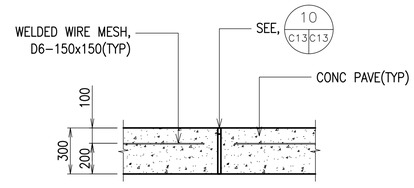

LONGITUDINAL CONTRACTION JOINT(@10m OC)

6 C13 C13 — NOT TO SCALE

APPR	
DATE	
DESCRIPTION	
SYM	

NAVFAC

SEAL

A/E INFO

APPROVED

DATE / /

FOR COMMANDER NAVFAC

ACTIVITY

SATISFACTORY TO DATE

DES	S.K	DRW		CHK	H.A
PM/DM	H.TSUKADA				
BRANCH MANAGER	H.TSUKADA				
CHIEF ENG/ARCH	S.KUMAGAI				
DATE	11/08/2015				

DEPARTMENT OF THE NAVY
NAVAL FACILITIES ENGINEERING COMMAND
YOKOSUKA, JAPAN
NAVAL FACILITIES ENGINEERING COMMAND FAR EAST
SASEBO, JAPAN
COMMANDER FLEET ACTIVITIES
CAPITAL IMPROVEMENTS

C50061 REPAIR SALTWATER PIPING AT INDIA BASIN 6 TO BLDG.1525

DETAILS–2

SCALE:	AS NOTED
EPROJECT NO.:	1371550
CONSTR. CONTR. NO.	
NAVFAC DRAWING NO.	17171428
SHEET	13 OF 14

C13

PAPER SIZE: 841mm x 594mm
SRN–NO.:

DRAWFORM REVISION: 10 MARCH 2009
PW DWG. NO.:

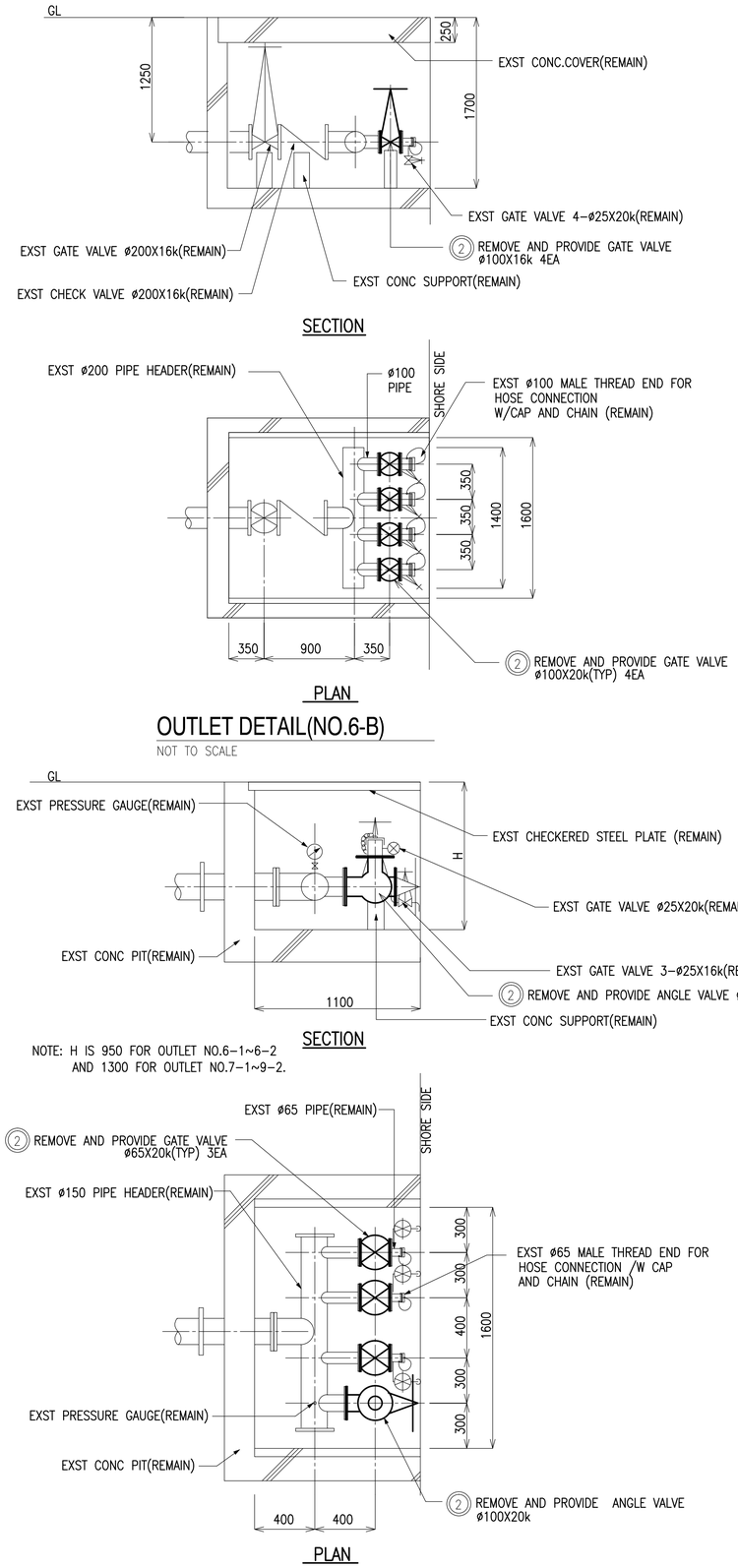

OUTLET DETAIL(NO.6-B)

NOT TO SCALE

NOTE: H IS 950 FOR OUTLET NO.6-1~6-2 AND 1300 FOR OUTLET NO.7-1~9-2.

OUTLET DETAILS

NOT TO SCALE

BERTH NO.	OUTLET NO.	SCOPE OF WORK VALVES		
		ø100x20K GATE	ø100x20K ANGLE	ø65x20K GATE
6	6-1		1	3
6	6-2		1	3
6	6-B	4		
7	7-1		1	3
7	7-2		1	3
7	7-3		1	3
8	8-1		1	3
8	8-2		1	3
8	8-3		1	3
9	9-1		1	3
9	9-2		1	3
TOTAL	11	4	10	30

SCHEDULE OF SALT WATER OUTLETS

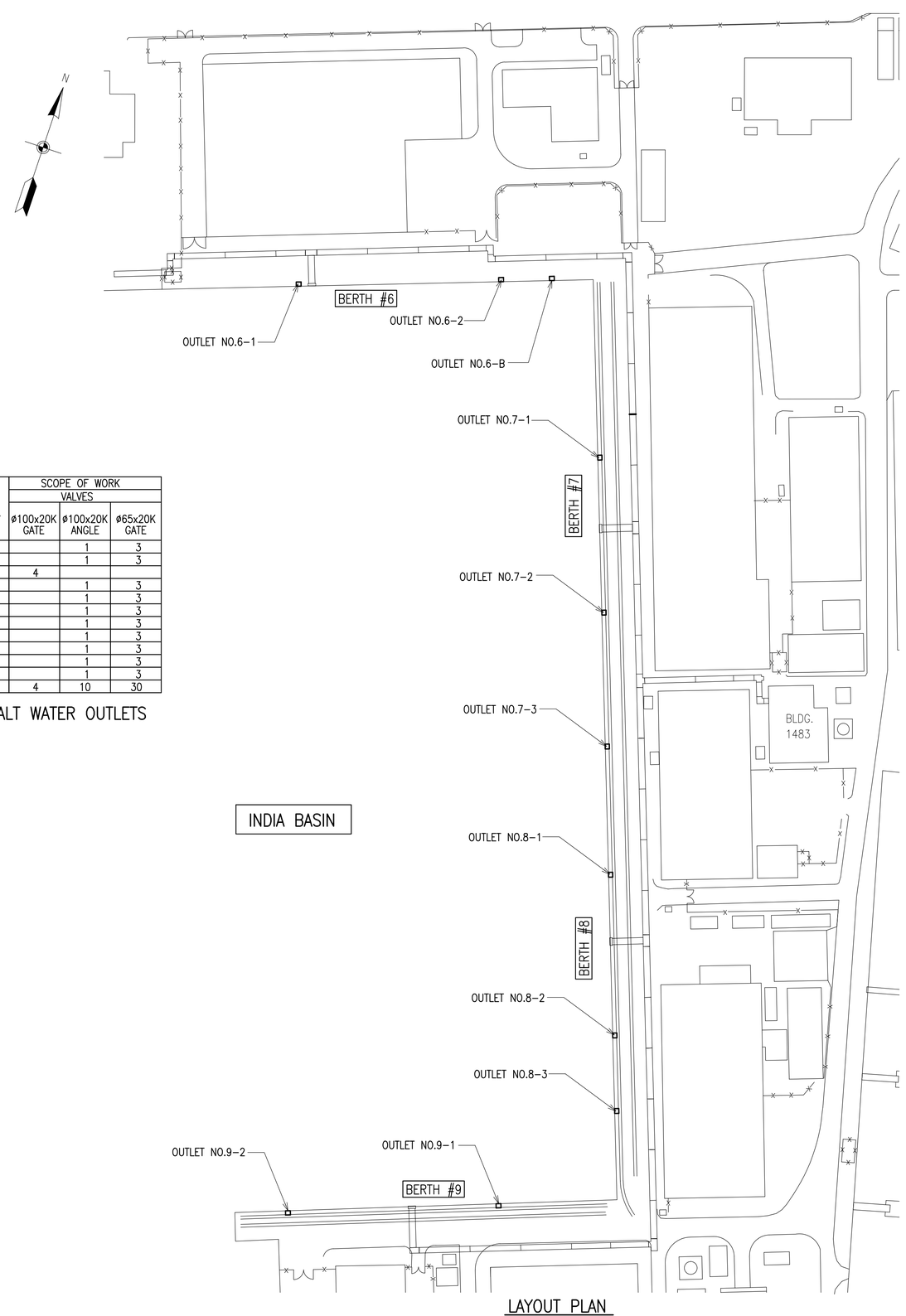

LAYOUT PLAN

NOT TO SCALE

1 C3 C14 DETAILS OF SALT WATER OUTLET

C4 C5 C6
C7 C8

SYM	DESCRIPTION	DATE	APPR

NAVFAC

SEAL

A/E INFO

APPROVED

DATE / /

FOR COMMANDER NAVFAC

ACTIVITY

SATISFACTORY TO DATE

DES S.K DRW CHK H.A

PM/DM H.TSUKADA

BRANCH MANAGER H.TSUKADA

CHIEF ENG/ARCH S.KUMAGAI

DATE 11/08/2015

DEPARTMENT OF THE NAVY NAVAL FACILITIES ENGINEERING COMMAND

NAVAL FACILITIES ENGINEERING COMMAND FAR EAST YOKOSUKA, JAPAN

CAPITAL IMPROVEMENTS

COMMANDER FLEET ACTIVITIES SASEBO, JAPAN

C50061 REPAIR SALTWATER PIPING AT INDIA BASIN 6 TO BLDG.1525

DETAILS OF SALT WATER OUTLET

SCALE: AS NOTED

EPROJECT NO.: 1371550

CONSTR. CONTR. NO.

NAVFAC DRAWING NO. 17171429

SHEET 14 OF 14

C14

PAPER SIZE: 841mm x 594mm

SRN-NO.:

DRAWFORM REVISION: 10 MARCH 2009

PW DWG. NO.: