REPAIRS TO WHARF 'D'

CRANEY ISLAND FUEL DEPOT

PORTSMOUTH, VIRGINIA

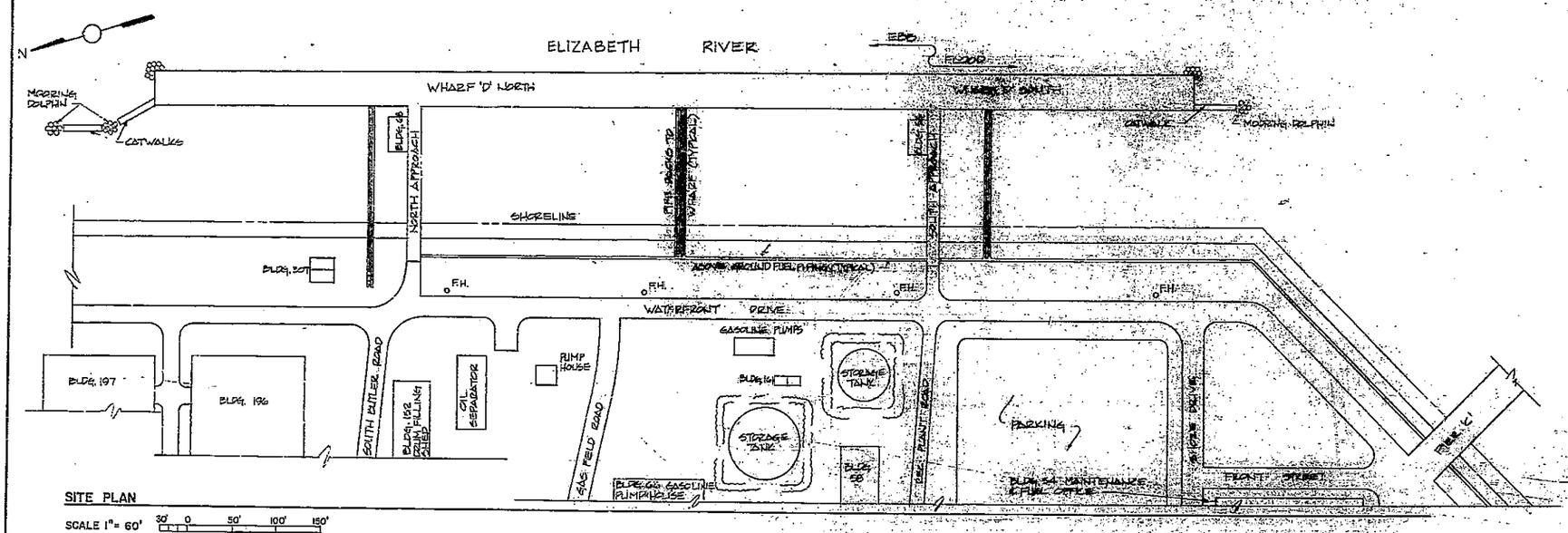

SITE PLAN

SCALE 1" = 60' 30' 0 50' 100' 150'

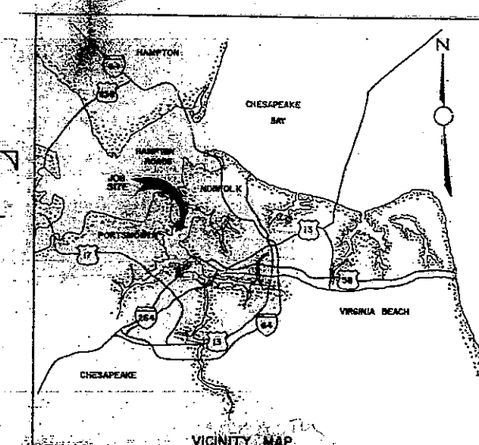

VICINITY MAP

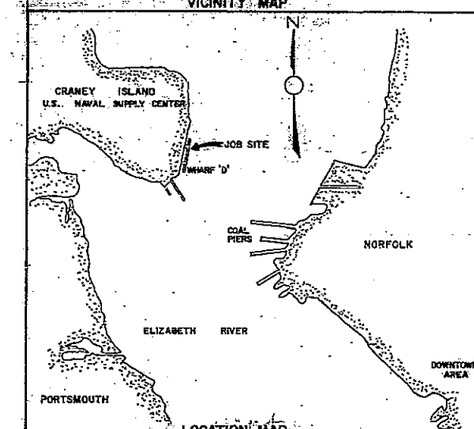

LOCATION MAP

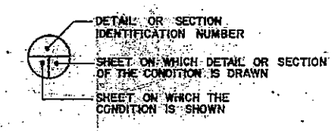

SECTION SYMBOL

INDEX OF DRAWINGS

SHEET NO.	DRAWING NUMBERS EFD	DRAWING NUMBERS NAVFAC	DESCRIPTION	TITLE
1	143114	4043114	GENERAL	COVER SHEET
2	143115	4043115	STRUCTURAL	PLAN—BENTS 1 TO 27
3	143116	4043116	STRUCTURAL	PLAN—BENTS 27 TO 53
4	143117	4043117	STRUCTURAL	PLAN—BENTS 53 TO 79
5	143118	4043118	STRUCTURAL	PLAN—BENTS 79 TO 104
6	143119	4043119	STRUCTURAL	PLAN—ACCESS RAMP & SECTIONS
7	143120	4043120	STRUCTURAL	CONCRETE REPAIR DETAILS
8	143121	4043121	STRUCTURAL	PILE REPAIR DETAILS

RECORD DRAWING LETTER DATED 08 AUG 1990

G-1

GLENN-HOLLINS AND ASSOCIATES, CONSULTING ENGINEERS

DEPARTMENT OF THE NAVY — NAVAL FACILITIES ENGINEERING COMMAND
ATLANTIC DIVISION
NAVAL STATION NORFOLK, VIRGINIA
NAVAL SUPPLY CENTER, CRANEY ISLAND PORTSMOUTH, VIRGINIA

REPAIRS TO WHARF "D"
COVER SHEET
GENERAL

SIZE F — CODE IDENT NO. 80091 — NAVFAC DRAWING NO. 4043114
CONTR. CONTR. NO. N62470-77-B-7618
SCALE AS NOTED — SNC 05-77-7618 — SHEET 1 OF 8
EFD DWG. NO. 143114

REVISIONS				
SYM	DESCRIPTION	DATE	SATISFACTORY	APPROVED BY

REPLACE SEWER LINES, PIERS "C" & "D"
CRANEY ISLAND FUEL DEPOT
PORTSMOUTH, VIRGINIA
CONTRACT NO. N62470-96-B-5055

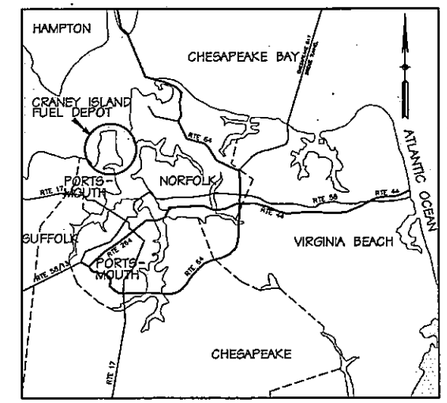

VICINITY MAP
NOT TO SCALE

INDEX TO DRAWINGS

SHEET NO.	SHEET TITLE	PWC DWG. NO.	NAVFAC DWG. NO.
T-1	TITLE SHEET	15584	4,334,104
C-1	SHEET INDEX	15584A	4,334,105
C-2	PIER "C" DEMOLITION PLAN	15584B	4,334,106
C-3	PIER "C" DEMOLITION PLAN	15584C	4,334,107
C-4	PIER "D" DEMOLITION PLAN - SHORESIDE	15584D	4,334,108
C-5	PIER "D" DEMOLITION PLAN	15584E	4,334,109
C-6	PIER "D" DEMOLITION PLAN	15584F	4,334,110
C-7	PIER "D" DEMOLITION PLAN	15584G	4,334,111
C-8	PIER "C" NEW WORK - PLAN AND PROFILE	15584H	4,334,112
C-9	PIER "C" NEW WORK - PLAN AND PROFILE	15584I	4,334,113
C-10	PIER "C" NEW WORK - PLAN AND PROFILE	15584J	4,334,114
C-11	PIER "C" NEW WORK - PLAN AND PROFILE	15584K	4,334,115
C-12	PIER "D" NEW WORK - SHORESIDE	15584L	4,334,116
C-13	PIER "D" NEW WORK - PLAN AND PROFILE	15584M	4,334,117
C-14	PIER "D" NEW WORK - PLAN AND PROFILE	15584N	4,334,118
C-15	PIER "D" NEW WORK - PLAN AND PROFILE	15584O	4,334,119
C-16	PIER "D" SECTIONS AND DETAILS	15584P	4,334,120
C-17	PIER "C" SECTIONS AND DETAILS	15584Q	4,334,121
C-18	DETAILS	15584R	4,334,122
C-19	PIPE HANGER DETAILS	15584S	4,334,123

QUALITY CONTROL REVIEW

David C. Jackson 9-27-96
SIGNATURE DATE

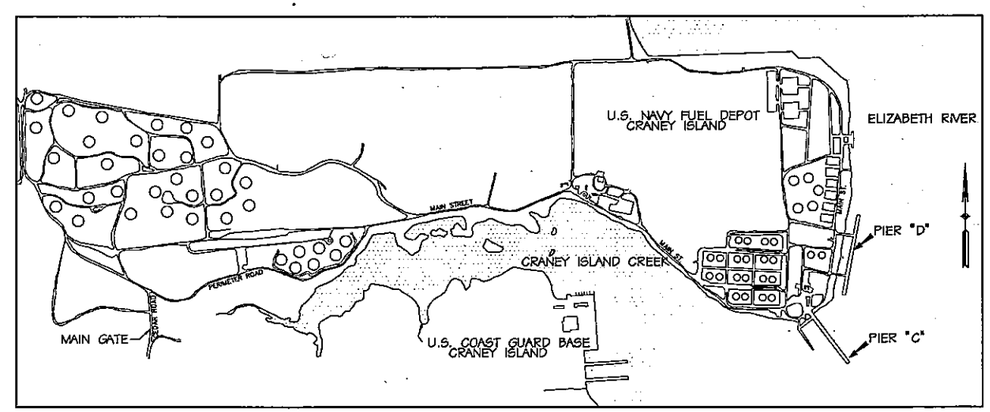

LOCATION MAP
NOT TO SCALE

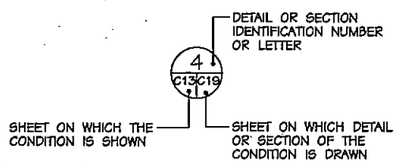

T-1

PHR&A

COMMONWEALTH OF VIRGINIA
DAVID C. JACKSON
No. 025246
9-27-96
PROFESSIONAL ENGINEER

JOB ORDER NUMBER: 1204827
DESIGNED: DCJ/JST/DBP
DRAWN: E.F./JST/DBP
CHECKED: DCJ
F.B. COLE, JR., P.E.
BR. MGR.
EIC JOHN M. SMITH, P.E.
R.H. IVES, JR., P.E.
ENGINEERING DIRECTOR
APPROVED: DATE:
SATISFACTORY TO ACTIVITY
APPROVED: DATE: 10/22/96
FOR C.O. FOR COMMANDER, NAVFAC

DEPARTMENT OF THE NAVY — NAVAL FACILITIES ENGINEERING COMMAND
NAVY PUBLIC WORKS CENTER
NAVAL STATION — NORFOLK, VIRGINIA
CRANEY ISLAND FUEL DEPOT — PORTSMOUTH, VIRGINIA

REPLACE SEWER LINES, PIERS "C" & "D"

TITLE SHEET

SIZE	CODE ID NO.	PWC DRAWING NO.	NAVFAC DWG NO.
D	80091	15584	4334104

CONSTR. CONTR. NO. N62470-96-B-5055
SCALE: GRAPHIC — SPEC. 05-96-5055 — SHEET 1 OF 20

PHR&A #9023-1-6

REVISIONS				
SYM	DESCRIPTION	DATE	SATISFACTORY	APPROVED BY

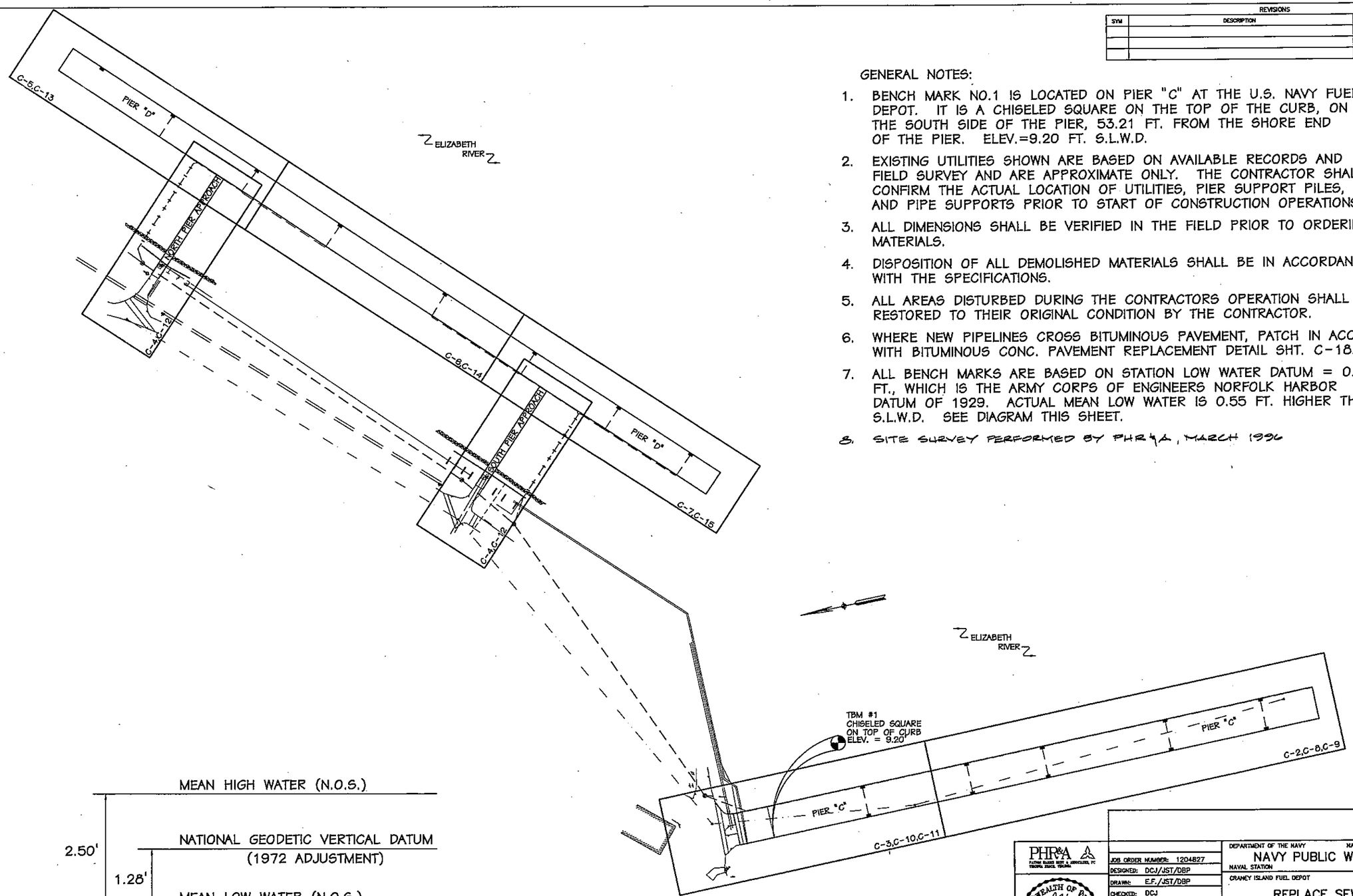

GENERAL NOTES:

1. BENCH MARK NO.1 IS LOCATED ON PIER "C" AT THE U.S. NAVY FUEL DEPOT. IT IS A CHISELED SQUARE ON THE TOP OF THE CURB, ON THE SOUTH SIDE OF THE PIER, 53.21 FT. FROM THE SHORE END OF THE PIER. ELEV.=9.20 FT. S.L.W.D.
2. EXISTING UTILITIES SHOWN ARE BASED ON AVAILABLE RECORDS AND FIELD SURVEY AND ARE APPROXIMATE ONLY. THE CONTRACTOR SHALL CONFIRM THE ACTUAL LOCATION OF UTILITIES, PIER SUPPORT PILES, AND PIPE SUPPORTS PRIOR TO START OF CONSTRUCTION OPERATIONS.
3. ALL DIMENSIONS SHALL BE VERIFIED IN THE FIELD PRIOR TO ORDERING MATERIALS.
4. DISPOSITION OF ALL DEMOLISHED MATERIALS SHALL BE IN ACCORDANCE WITH THE SPECIFICATIONS.
5. ALL AREAS DISTURBED DURING THE CONTRACTORS OPERATION SHALL BE RESTORED TO THEIR ORIGINAL CONDITION BY THE CONTRACTOR.
6. WHERE NEW PIPELINES CROSS BITUMINOUS PAVEMENT, PATCH IN ACCORDANCE WITH BITUMINOUS CONC. PAVEMENT REPLACEMENT DETAIL SHT. C-18.
7. ALL BENCH MARKS ARE BASED ON STATION LOW WATER DATUM = 0.00 FT., WHICH IS THE ARMY CORPS OF ENGINEERS NORFOLK HARBOR DATUM OF 1929. ACTUAL MEAN LOW WATER IS 0.55 FT. HIGHER THAN S.L.W.D. SEE DIAGRAM THIS SHEET.
8. SITE SURVEY PERFORMED BY PHR&A, MARCH 1996

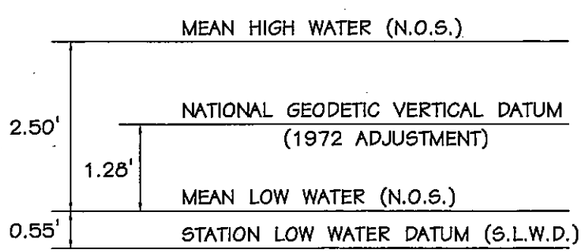

DIAGRAM OF DATUM PLANE

SHEET INDEX

C-1

PHR&A
PATTON HARRIS RIDDY & ASSOCIATES, PC
TRIONG, ISLAND, VIRGINIA

COMMONWEALTH OF VIRGINIA
DAVID C. JACKSON
No. 025246
9-27-96
PROFESSIONAL ENGINEER

JOB ORDER NUMBER: 1204827
DESIGNED: DCJ/JST/DBP
DRAWN: E.F./JST/DBP
CHECKED: DCJ
F.B. COLE, JR., P.E.
BR. MGR.
EIC JOHN M. SMITH, P.E.
R.H. IVES, JR., P.E.
ENGINEERING DIRECTOR
APPROVED: DATE: 7/1/96
L. JOHNSTON
SATISFACTORY TO ACTIVITY
APPROVED: DATE: 10/22/96
FOR C.O. FOR COMMANDER, NAVFAC

DEPARTMENT OF THE NAVY — NAVAL FACILITIES ENGINEERING COMMAND
NAVY PUBLIC WORKS CENTER
NAVAL STATION — NORFOLK, VIRGINIA
CRANEY ISLAND FUEL DEPOT — PORTSMOUTH, VIRGINIA

REPLACE SEWER LINES, PIERS "C" & "D"

SHEET INDEX

SIZE	CODE ID NO.	PWC DRAWING NO.	NAVFAC DWG NO.
D	80091	15584A	4334105
		CONSTR. CONTR. NO. N62470-96-B-5055	
SCALE: GRAPHIC		SPEC. 05-96-5055	SHEET 2 OF 20

PHR&A #9023-1-6

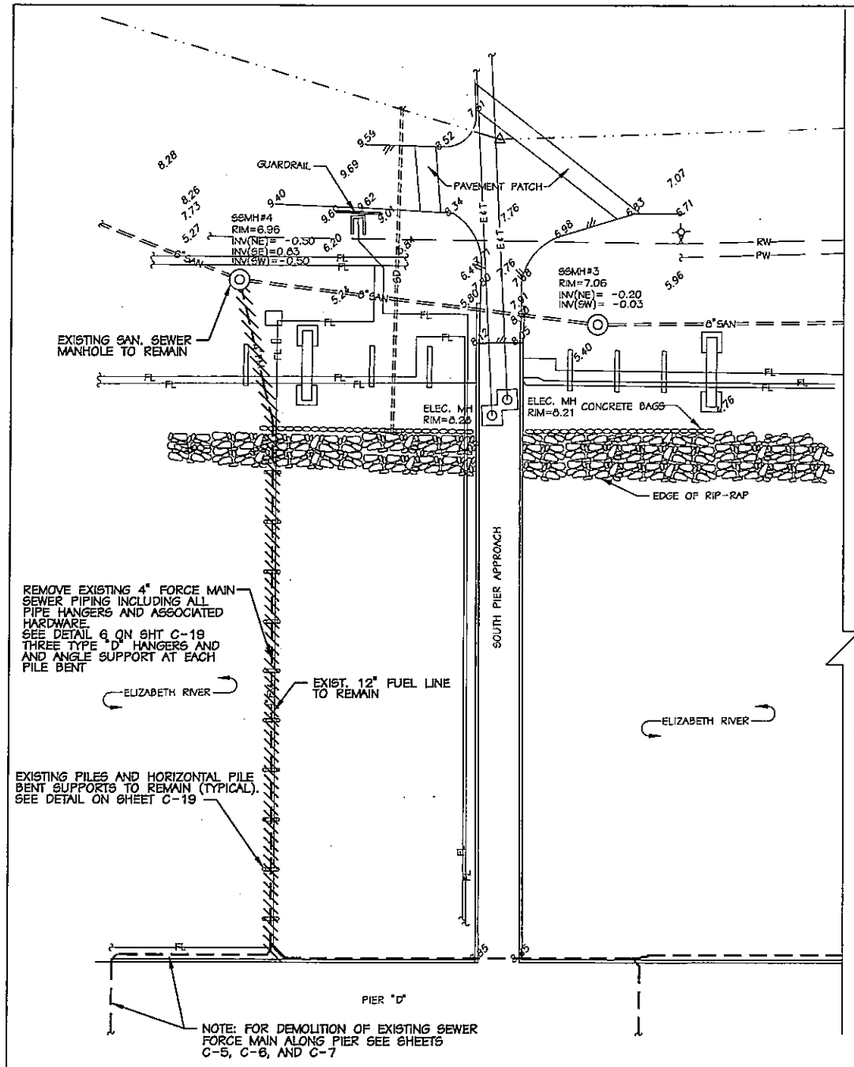

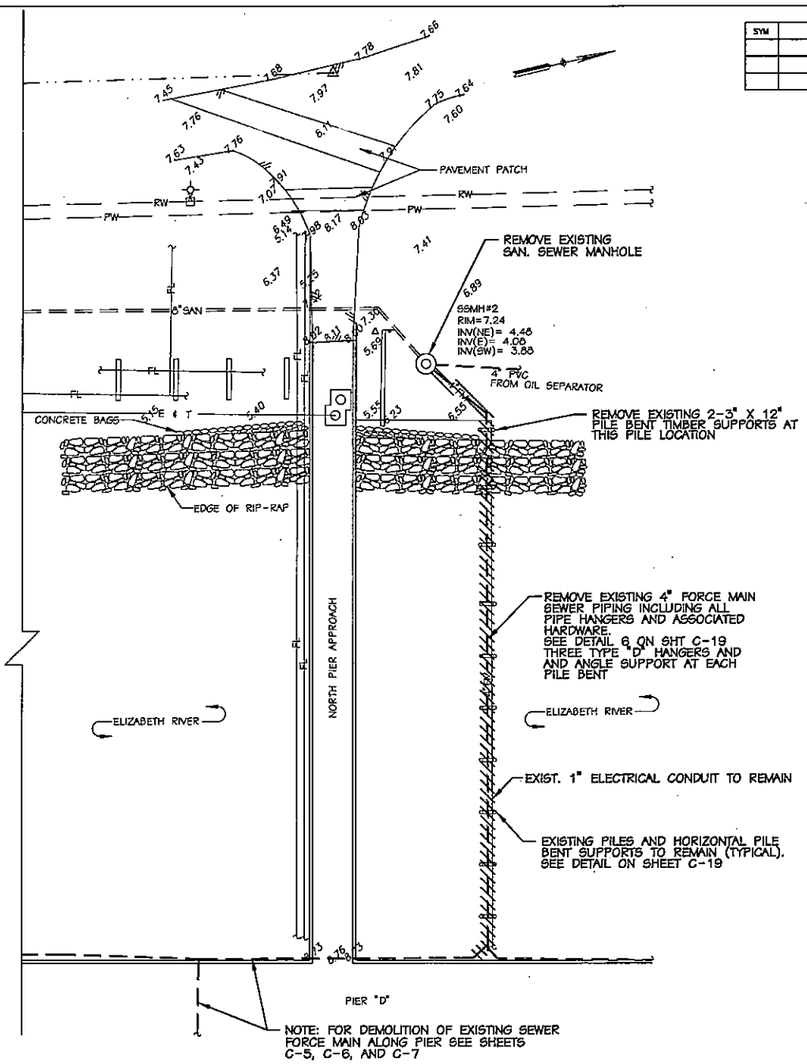

REVISIONS

SYM	DESCRIPTION	DATE	SATISFACTORY	APPROVED BY

LEGEND

- SPOT ELEVATION
- DIRECTION OF FLOW
- WATER LINE(POTABLE)
- WATER LINE(UNTREATED)
- VALVE
- FIRE HYDRANT
- CATCH BASIN
- MANHOLE
- STORM DRAIN LINE
- SANITARY DRAIN LINE(GRAVITY)
- SANITARY FORCE MAIN
- ELEC. & TEL. UNDERGROUND DUCT
- FUEL LINE
- BALLAST DRAIN LINE
- LIGHT OR POWER POLE
- ASPHALT PAVEMENT
- CONCRETE BAGS
- TELEPHONE PEDESTAL
- SURVEY BASELINE
- TRAVERSE POINT
- ELEC. MANHOLE

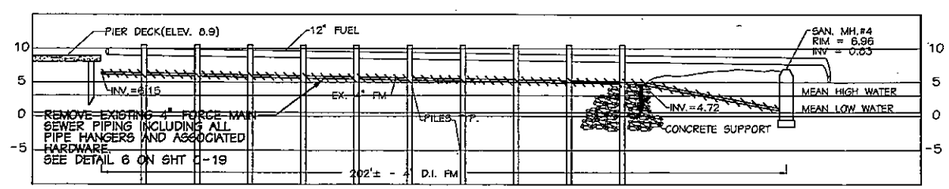

PROFILE: SOUTH PIPE CROSSING
HORZ : 1"=20' VERT. : 1"=10'

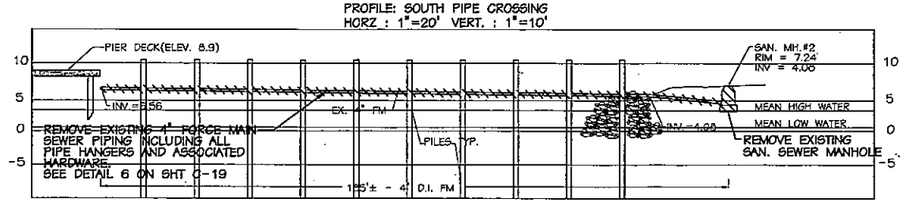

PROFILE: NORTH PIPE CROSSING
HORZ : 1"=20' VERT. : 1"=10'

GRAPHIC SCALES

HOR: 1" = 20' 20 0 20 40 60 80

C-4

PHR&A
PAXTON HUGHES, EITT & ASSOCIATES, PC
VIRGINIA BEACH, VIRGINIA

COMMONWEALTH OF VIRGINIA
DAVID C. JACKSON
No. 025246
9-27-96
PROFESSIONAL ENGINEER

JOB ORDER NUMBER:	1204827
DESIGNED:	DCJ/JST/DBP
DRAWN:	E.F./JST/DBP
CHECKED:	DCJ
F.B. COLE, JR., P.E. BR. MGR.	
EIC	JOHN M. SMITH, P.E.
R.H. IVES, JR., P.E. ENGINEERING DIRECTOR	
APPROVED: SATISFACTORY TO ACTIVITY	DATE: L. JOHNSTON 7/1/96
APPROVED: FOR C.O. FOR COMMANDER, NAVFAC	DATE: 9/27/96

DEPARTMENT OF THE NAVY — NAVAL FACILITIES ENGINEERING COMMAND
NAVY PUBLIC WORKS CENTER
NAVAL STATION — NORFOLK, VIRGINIA
CRANEY ISLAND FUEL DEPOT — PORTSMOUTH, VIRGINIA

REPLACE SEWER LINES, PIERS "C" & "D"

PIER "D" DEMOLITION PLAN—SHORESIDE

SIZE	CODE ID NO.	PWC DRAWING NO.	NAVFAC NO.
D	80091	15584D	4334108

CONSTR. CONTR. NO. N62470-96-B-5055
SCALE: GRAPHIC — SPEC. 05-96-5055 — SHEET 5 OF 20

PHR&A #9023-1-6

C:\DGN\9023-1-6\C-4 Tue Sep 24 15:19:27 1996

REVISIONS				
SYM	DESCRIPTION	DATE	SATISFACTORY	APPROVED BY

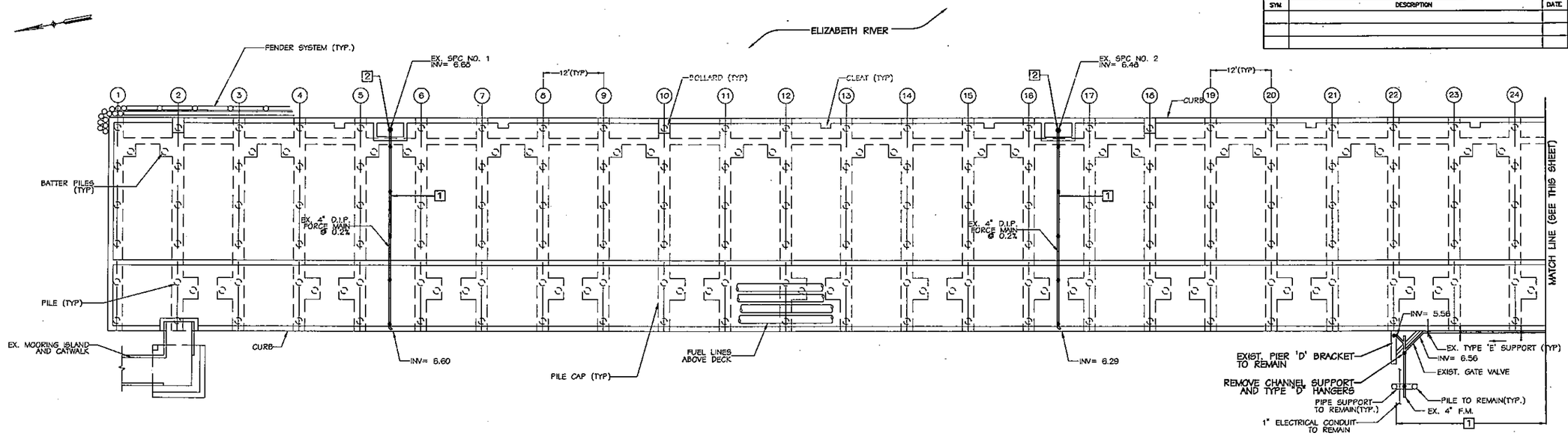

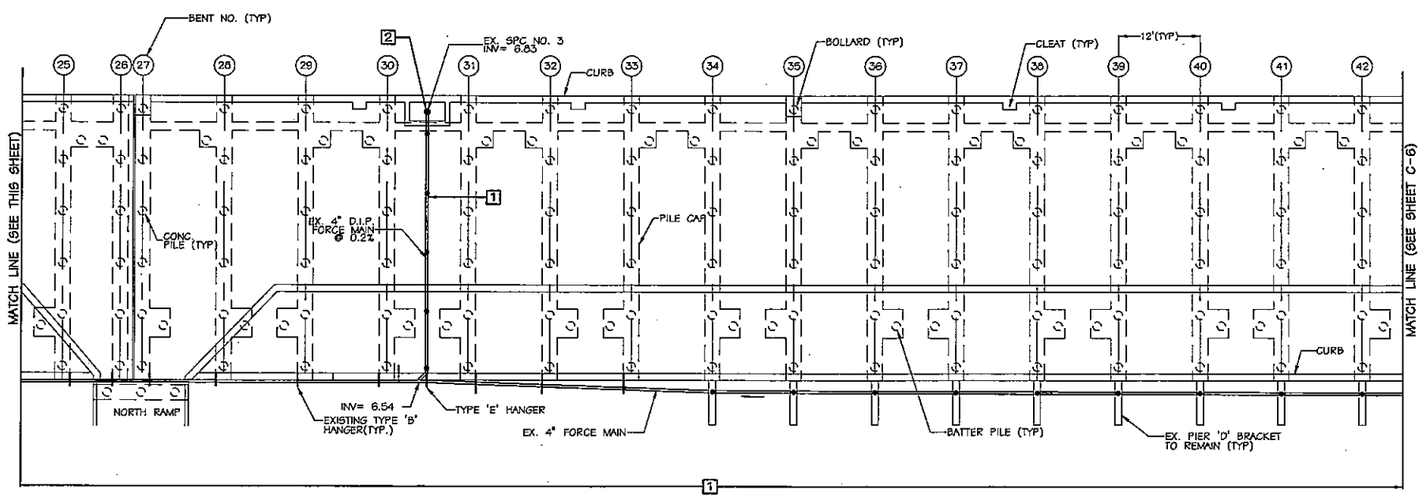

SEWER DEMOLITION NOTES

1. REMOVE EXISTING 4" FORCE MAIN SEWER PIPING INCLUDING ALL ASSOCIATED HARDWARE AND PIPE HANGERS(TYPE 'B', 'D' AND 'E'). EXISTING PIER "D" BRACKET USED TO PLACE NEW TYPE 'D' HANGERS SHALL REMAIN IN PLACE.
2. REMOVE SHIP-TO-PIER CONNECTION (SPC) AND ASSOCIATED HARDWARE, INCLUDING LATERALS, HANGERS AND SPC GUARDRAIL.

GRAPHIC SCALE

1" = 10' 10 0 10 20 30 40

C-5

PHR&A

JOB ORDER NUMBER: 1204827
DESIGNED: DCJ/JST/DBP
DRAWN: E.F./JST/DBP
CHECKED: DCJ
F.B. COLE, JR., P.E.
BR. MGR.
EC JOHN M. SMITH, P.E.
R.H. IVES, JR., P.E.
ENGINEERING DIRECTOR
APPROVED: DATE:
SATISFACTORY TO ACTIVITY
APPROVED: DATE:
FOR CO. FOR COMMANDER, NAVFAC

COMMONWEALTH OF VIRGINIA
DAVID C. JACKSON
No. 025246
9-27-96
PROFESSIONAL ENGINEER

DEPARTMENT OF THE NAVY — NAVAL FACILITIES ENGINEERING COMMAND
NAVY PUBLIC WORKS CENTER
NAVAL STATION — NORFOLK, VIRGINIA
CRANEY ISLAND FUEL DEPOT — PORTSMOUTH, VIRGINIA

REPLACE SEWER LINES, PIERS "C" & "D"

PIER "D" DEMOLITION PLAN

SIZE	CODE ID NO.	PWC DRAWING NO.	NAVFAC NO.
D	80091	15584E	4334109

CONSTR. CONTR. NO. N62470-96-B-5055
SCALE: GRAPHIC — SPEC. 05-96-5055 — SHEET 6 OF 20

PHR&A #9023-1-6

REVISIONS				
SYM	DESCRIPTION	DATE	SATISFACTORY	APPROVED BY

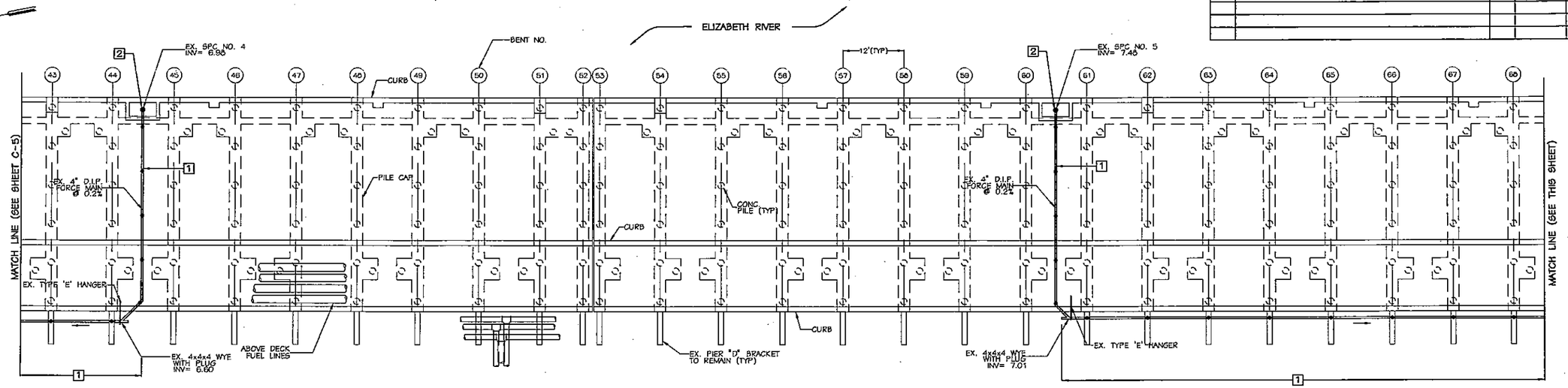

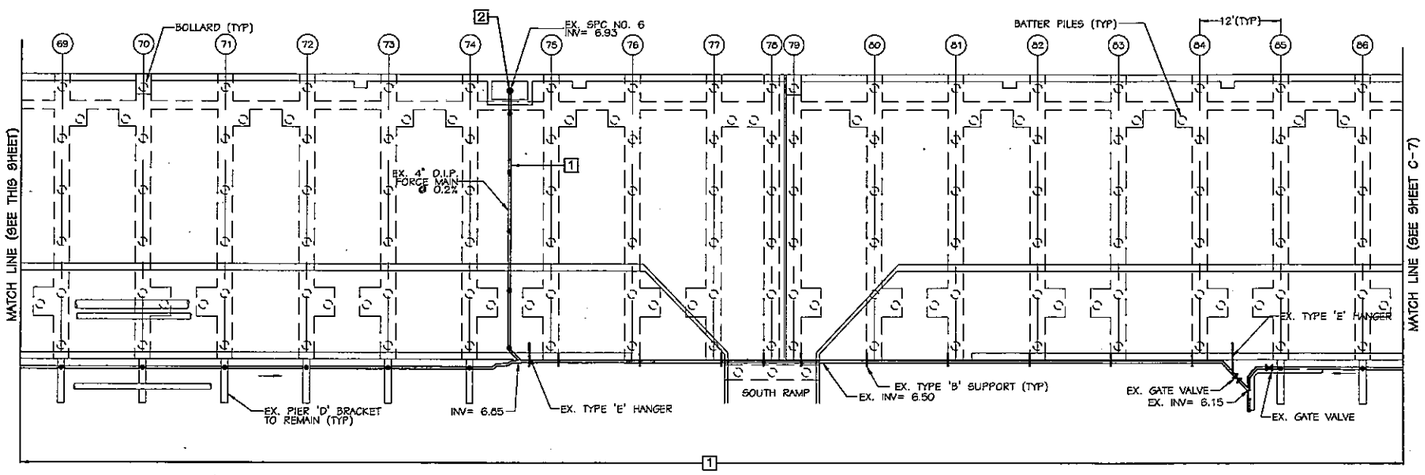

SEWER DEMOLITION NOTES

1. REMOVE EXISTING 4" FORCE MAIN SEWER PIPING INCLUDING ALL ASSOCIATED HARDWARE AND PIPE HANGERS(TYPE 'B', 'D' AND 'E'). EXISTING PIER "D" BRACKET USED TO PLACE NEW TYPE 'D' HANGERS SHALL REMAIN IN PLACE.
2. REMOVE SHIP-TO-PIER CONNECTION (SPC) AND ASSOCIATED HARDWARE, INCLUDING LATERALS, HANGERS AND SPC GUARDRAIL.

GRAPHIC SCALE

1" = 10' 10 0 10 20 30 40

C-6

PHR&A
PAYNE, HARRIS, RIDDY & ASSOCIATES, PC
VIRGINIA BEACH, VIRGINIA

COMMONWEALTH OF VIRGINIA
DAVID C. JACKSON
No. 025246
9-27-96
PROFESSIONAL ENGINEER

JOB ORDER NUMBER:	1204827
DESIGNED:	DCJ/JST/DBP
DRAWN:	E.F./JST/DBP
CHECKED:	DCJ
F.B. COLE, JR., P.E. SR. MGR.	
EIC	JOHN M. SMITH, P.E.
R.H. IVES, JR., P.E. ENGINEERING DIRECTOR	
APPROVED: L. JOHNSTON DATE: 7/1/96 SATISFACTORY TO ACTIVITY	
APPROVED: FOR C.O. FOR COMMANDER, NAVFAC DATE: 10/25/96	

DEPARTMENT OF THE NAVY — NAVAL FACILITIES ENGINEERING COMMAND

NAVY PUBLIC WORKS CENTER
NAVAL STATION — NORFOLK, VIRGINIA
CRANEY ISLAND FUEL DEPOT — PORTSMOUTH, VIRGINIA

REPLACE SEWER LINES, PIERS "C" & "D"

PIER "D" DEMOLITION PLAN

SIZE	CODE ID NO.	PWC DWG. NO.	NAVFAC NO.
D	80091	15584F	4334110

CONSTR. CONTR. NO. N62470-96-B-5055
SCALE: GRAPHIC — SPEC. 05-96-5033 — SHEET 7 OF 20

PHR&A #9023-1-6

C:\J085\9023-1-6\C-6 Tue Sep 24 09:52:14 1996

REVISIONS				
SYM	DESCRIPTION	DATE	SATISFACTORY	APPROVED BY

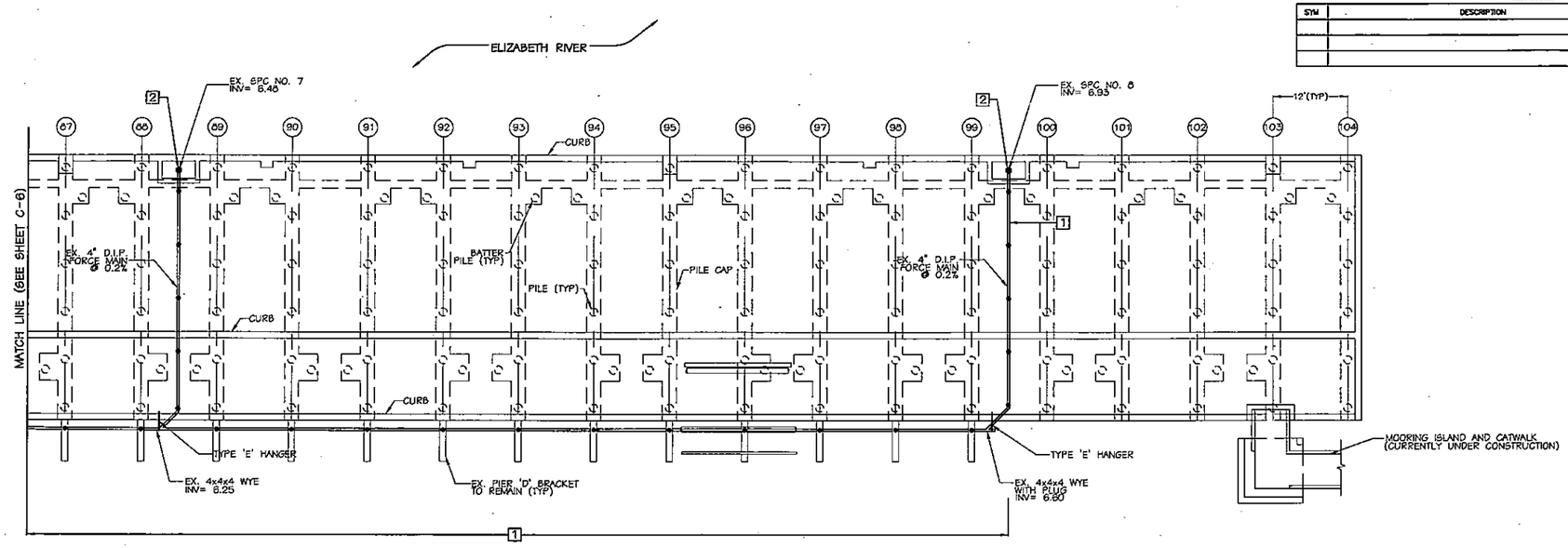

SEWER DEMOLITION NOTES

1. REMOVE EXISTING 4" FORCE MAIN SEWER PIPING INCLUDING ALL ASSOCIATED HARDWARE AND PIPE HANGERS(TYPE 'B', 'D' AND 'E'). EXISTING PIER "D" BRACKET USED TO PLACE NEW TYPE 'D' HANGERS SHALL REMAIN IN PLACE.
2. REMOVE SHIP-TO-PIER CONNECTION (SPC) AND ASSOCIATED HARDWARE, INCLUDING LATERALS, HANGERS AND SPC GUARDRAIL.

GRAPHIC SCALE

1" = 10' 10 0 10 20 30 40

C-7

PHR&A
PATTON HARRIS RUST & ASSOCIATES, PC
VIRGINIA BEACH, VIRGINIA

COMMONWEALTH OF VIRGINIA
DAVID E. JACKSON
No. 025246
9-27-96
PROFESSIONAL ENGINEER

JOB ORDER NUMBER: 1204827
DESIGNED: DCJ/JST/DBP
DRAWN: E.F./JST/DBP
CHECKED: DCJ
F.B. COLE, JR., P.E.
BR. MGR.
EIC JOHN M. SMITH, P.E.
R.H. IVES, JR., P.E.
ENGINEERING DIRECTOR
APPROVED: DATE:
L. JOHNSTON 7/1/96
SATISFACTORY TO ACTIVITY
APPROVED: DATE:
FOR C.O. FOR COMMANDER, NAVFAC

DEPARTMENT OF THE NAVY — NAVAL FACILITIES ENGINEERING COMMAND
NAVY PUBLIC WORKS CENTER
NAVAL STATION — NORFOLK, VIRGINIA
CRANEY ISLAND FUEL DEPOT — PORTSMOUTH, VIRGINIA

REPLACE SEWER LINES, PIERS "C" & "D"

PIER "D" DEMOLITION PLAN

SIZE	CODE ID NO.	FUEC DRAWING NO.	NAVFAC NO.
D	80091	15584G	4334111

CONSTR. CONTR. NO. N62470-96-B-5055
SCALE: GRAPHIC SPEC. 05-96-5055 SHEET 8 OF 20

PHR&A #9023-1-6

C:\WORK\9023-1-6\C-7 Tue Sep 24 11:23:41 1996

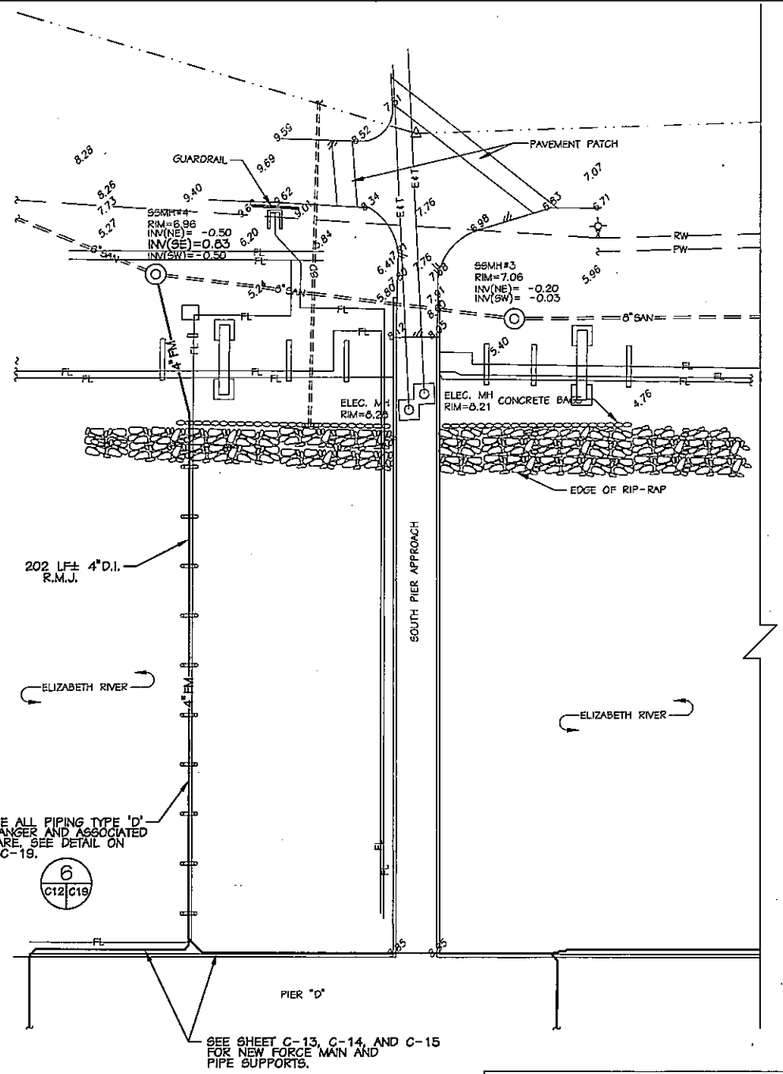

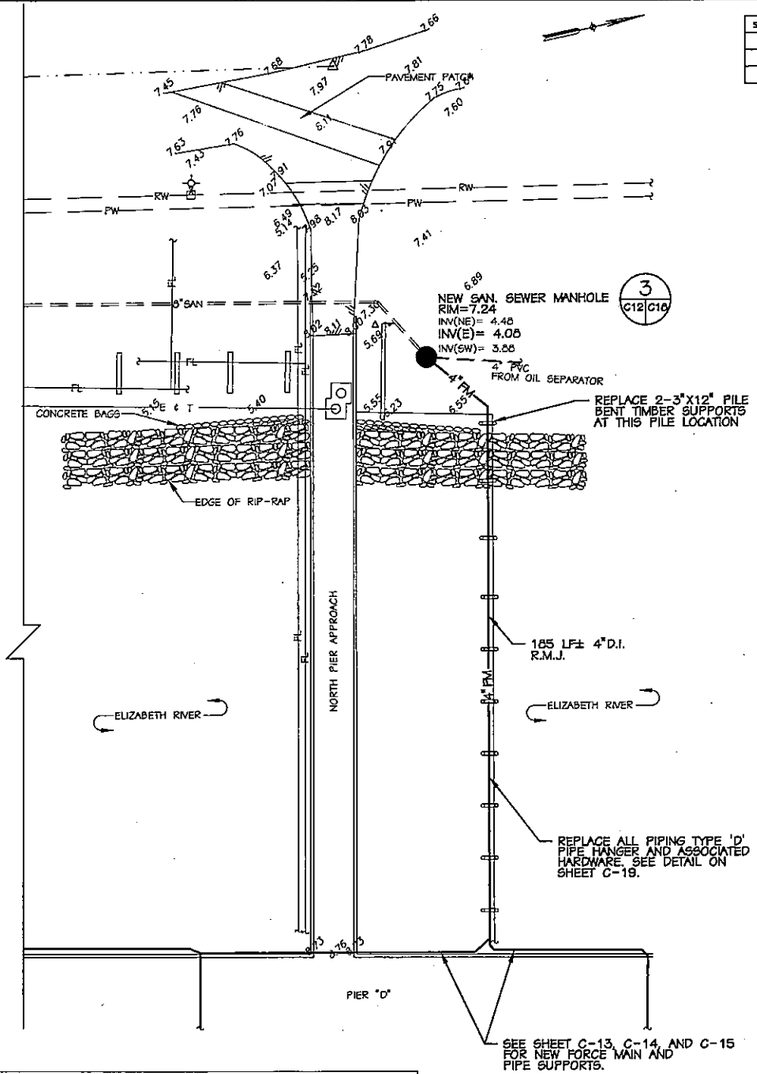

REVISIONS				
SYM	DESCRIPTION	DATE	SATISFACTORY	APPROVED BY

LEGEND

	EXISTING	NEW
SPOT ELEVATION	7.60	
DIRECTION OF FLOW		
WATER LINE(POTABLE)	PW	
WATER LINE(UNTREATED)	RW	
VALVE		
FIRE HYDRANT		
CATCH BASIN		
MANHOLE		
STORM DRAIN LINE	SD	
SANITARY DRAIN LINE(GRAVITY)	SAN	
SANITARY FORCE MAIN	FM	4" FM
ELEC. & TEL. UNDERGROUND DUCT	E & T	
FUEL LINE	FL	
BALLAST DRAIN LINE	B	
LIGHT OR POWER POLE		
ASPHALT PAVEMENT		
CONCRETE BAGS		
TELEPHONE PEDESTAL		
SURVEY BASELINE		
TRAVERSE POINT		
ELEC. MANHOLE		

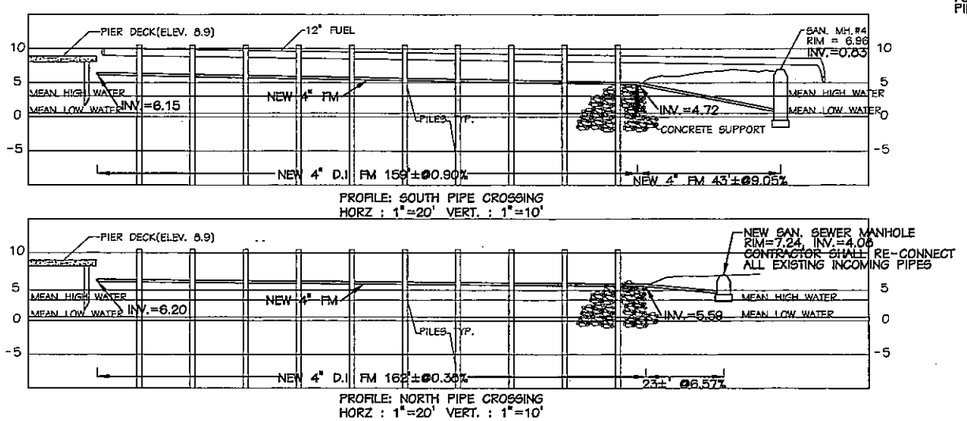

GRAPHIC SCALES

HOR: 1" = 20' 20 0 20 40 60 80

C-12

PHR&A

JOB ORDER NUMBER: 1204827
DESIGNED: DCJ/JST/DBP
DRAWN: E.F./JST/DBP
CHECKED: DCJ
F.B. COLE, JR., P.E.
BR. MGR.
DC JOHN M. SMITH, P.E.
R.H. IVES, JR., P.E.
ENGINEERING DIRECTOR
APPROVED: DATE:
SATISFACTORY TO ACTIVITY
APPROVED: DATE:
FOR C.O. FOR COMMANDER, NAVFAC

COMMONWEALTH OF VIRGINIA
DAVID C. JOHNSON
No. 025246
9-27-96
PROFESSIONAL ENGINEER

DEPARTMENT OF THE NAVY — NAVAL FACILITIES ENGINEERING COMMAND
NAVY PUBLIC WORKS CENTER
NAVAL STATION — NORFOLK, VIRGINIA
CRANEY ISLAND FUEL DEPOT — PORTSMOUTH, VIRGINIA

REPLACE SEWER LINES, PIERS "C" & "D"

PIER "D" NEW WORK – SHORESIDE

SIZE	CODE ID NO.	FWC DRAWING NO.	NAVFAC NO.
D	80091	15584L	4334116

CONSTR. CONTR. NO. N62470-96-B-5055
SCALE: GRAPHIC — SPEC. 05-96-5055 — SHEET 13 OF 20

PHR&A #9023-1-6

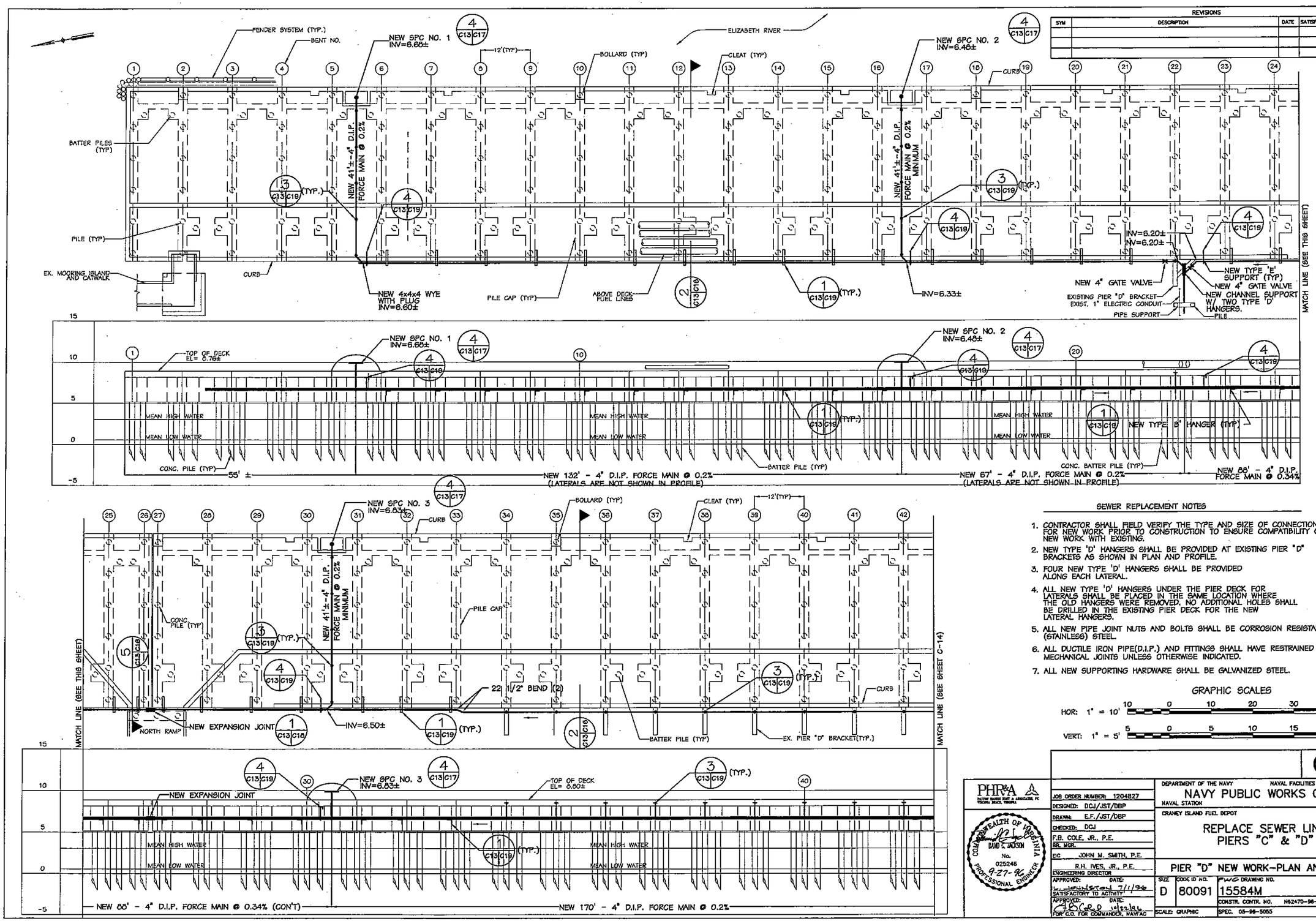

REVISIONS				
SYM	DESCRIPTION	DATE	SATISFACTORY	APPROVED BY

SEWER REPLACEMENT NOTES

1. CONTRACTOR SHALL FIELD VERIFY THE TYPE AND SIZE OF CONNECTIONS FOR NEW WORK PRIOR TO CONSTRUCTION TO ENSURE COMPATIBILITY OF NEW WORK WITH EXISTING.
2. NEW TYPE 'D' HANGERS SHALL BE PROVIDED AT EXISTING PIER "D" BRACKETS AS SHOWN IN PLAN AND PROFILE.
3. FOUR NEW TYPE 'D' HANGERS SHALL BE PROVIDED ALONG EACH LATERAL.
4. ALL NEW TYPE 'D' HANGERS UNDER THE PIER DECK FOR LATERALS SHALL BE PLACED IN THE SAME LOCATION WHERE THE OLD HANGERS WERE REMOVED. NO ADDITIONAL HOLES SHALL BE DRILLED IN THE EXISTING PIER DECK FOR THE NEW LATERAL HANGERS.
5. ALL NEW PIPE JOINT NUTS AND BOLTS SHALL BE CORROSION RESISTANT (STAINLESS) STEEL.
6. ALL DUCTILE IRON PIPE(D.I.P.) AND FITTINGS SHALL HAVE RESTRAINED MECHANICAL JOINTS UNLESS OTHERWISE INDICATED. 5 C13 C17
7. ALL NEW SUPPORTING HARDWARE SHALL BE GALVANIZED STEEL.

GRAPHIC SCALES

HOR: 1" = 10' 10 0 10 20 30 40

VERT: 1" = 5' 5 0 5 10 15 20

C-13

PHR&A

COMMONWEALTH OF VIRGINIA
DAVID C. JACKSON
No. 025246
9-27-96
PROFESSIONAL ENGINEER

JOB ORDER NUMBER: 1204827
DESIGNED: DCJ/JST/DBP
DRAWN: E.F./JST/DBP
CHECKED: DCJ
F.B. COLE, JR., P.E.
BR. MGR.
EIC JOHN M. SMITH, P.E.
R.H. IVES, JR., P.E.
ENGINEERING DIRECTOR
APPROVED: DATE:
SATISFACTORY TO ACTIVITY 7/1/96
APPROVED: DATE:
FOR C.O. FOR COMMANDER, NAVFAC

DEPARTMENT OF THE NAVY — NAVAL FACILITIES ENGINEERING COMMAND
NAVY PUBLIC WORKS CENTER
NAVAL STATION — NORFOLK, VIRGINIA
CRANEY ISLAND FUEL DEPOT — PORTSMOUTH, VIRGINIA

REPLACE SEWER LINES, PIERS "C" & "D"

PIER "D" NEW WORK-PLAN AND PROFILE

SIZE	CODE ID NO.	FWC DRAWING NO.	NAVFAC NO.
D	80091	15584M	4334117

CONSTR. CONTR. NO. N62470-96-B-5055
SCALE: GRAPHIC — SPEC. 05-96-5055 — SHEET 14 OF 20

PHR&A #9023-1-6

C:\JOBS\9023-1-6\C-13 Thu Sep 26 13:16:49 1996

REVISIONS				
SYM	DESCRIPTION	DATE	SATISFACTORY	APPROVED BY

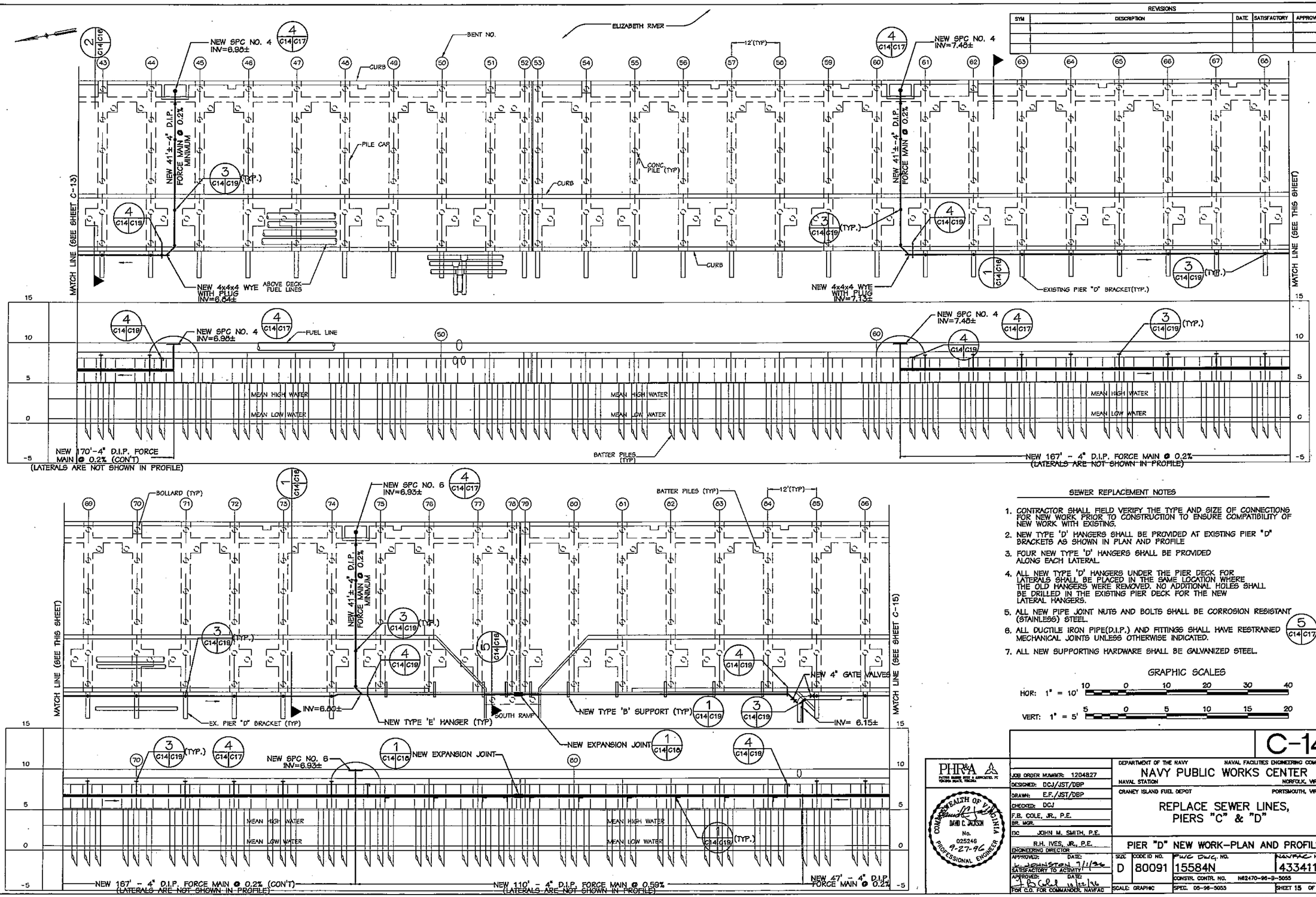

SEWER REPLACEMENT NOTES

1. CONTRACTOR SHALL FIELD VERIFY THE TYPE AND SIZE OF CONNECTIONS FOR NEW WORK PRIOR TO CONSTRUCTION TO ENSURE COMPATIBILITY OF NEW WORK WITH EXISTING.
2. NEW TYPE 'D' HANGERS SHALL BE PROVIDED AT EXISTING PIER "D" BRACKETS AS SHOWN IN PLAN AND PROFILE
3. FOUR NEW TYPE 'D' HANGERS SHALL BE PROVIDED ALONG EACH LATERAL.
4. ALL NEW TYPE 'D' HANGERS UNDER THE PIER DECK FOR LATERALS SHALL BE PLACED IN THE SAME LOCATION WHERE THE OLD HANGERS WERE REMOVED. NO ADDITIONAL HOLES SHALL BE DRILLED IN THE EXISTING PIER DECK FOR THE NEW LATERAL HANGERS.
5. ALL NEW PIPE JOINT NUTS AND BOLTS SHALL BE CORROSION RESISTANT (STAINLESS) STEEL.
6. ALL DUCTILE IRON PIPE(D.I.P.) AND FITTINGS SHALL HAVE RESTRAINED MECHANICAL JOINTS UNLESS OTHERWISE INDICATED. (5 / C14 C17)
7. ALL NEW SUPPORTING HARDWARE SHALL BE GALVANIZED STEEL.

GRAPHIC SCALES

HOR: 1" = 10' (10 0 10 20 30 40)

VERT: 1" = 5' (5 0 5 10 15 20)

C-14

PHR&A
PATTON HARRIS RUST & ASSOCIATES, PC
VIRGINIA BEACH, VIRGINIA

COMMONWEALTH OF VIRGINIA
DAVID C. JACKSON
No. 025246
9-27-96
PROFESSIONAL ENGINEER

JOB ORDER NUMBER:	1204827
DESIGNED:	DCJ/JST/DBP
DRAWN:	E.F./JST/DBP
CHECKED:	DCJ
F.B. COLE, JR., P.E. BR. MGR.	
EIC	JOHN M. SMITH, P.E.
R.H. IVES, JR., P.E. ENGINEERING DIRECTOR	
APPROVED: DATE:	L. JOHNSTON 7/1/96
SATISFACTORY TO ACTIVITY	
APPROVED: DATE:	10/22/96
FOR C.O. FOR COMMANDER, NAVFAC	

DEPARTMENT OF THE NAVY — NAVAL FACILITIES ENGINEERING COMMAND

NAVY PUBLIC WORKS CENTER

NAVAL STATION — NORFOLK, VIRGINIA

CRANEY ISLAND FUEL DEPOT — PORTSMOUTH, VIRGINIA

REPLACE SEWER LINES, PIERS "C" & "D"

PIER "D" NEW WORK—PLAN AND PROFILE

SIZE	CODE ID NO.	PWC DWG. NO.	NAVFAC NO.
D	80091	15584N	4334118

CONSTR. CONTR. NO. N62470-96-B-5055

SCALE: GRAPHIC — SPEC. 05-96-5055 — SHEET 15 OF 20

PHR&A #9023-1-6

REVISIONS				
SYM.	DESCRIPTION	DATE	SATISFACTORY	APPROVED BY

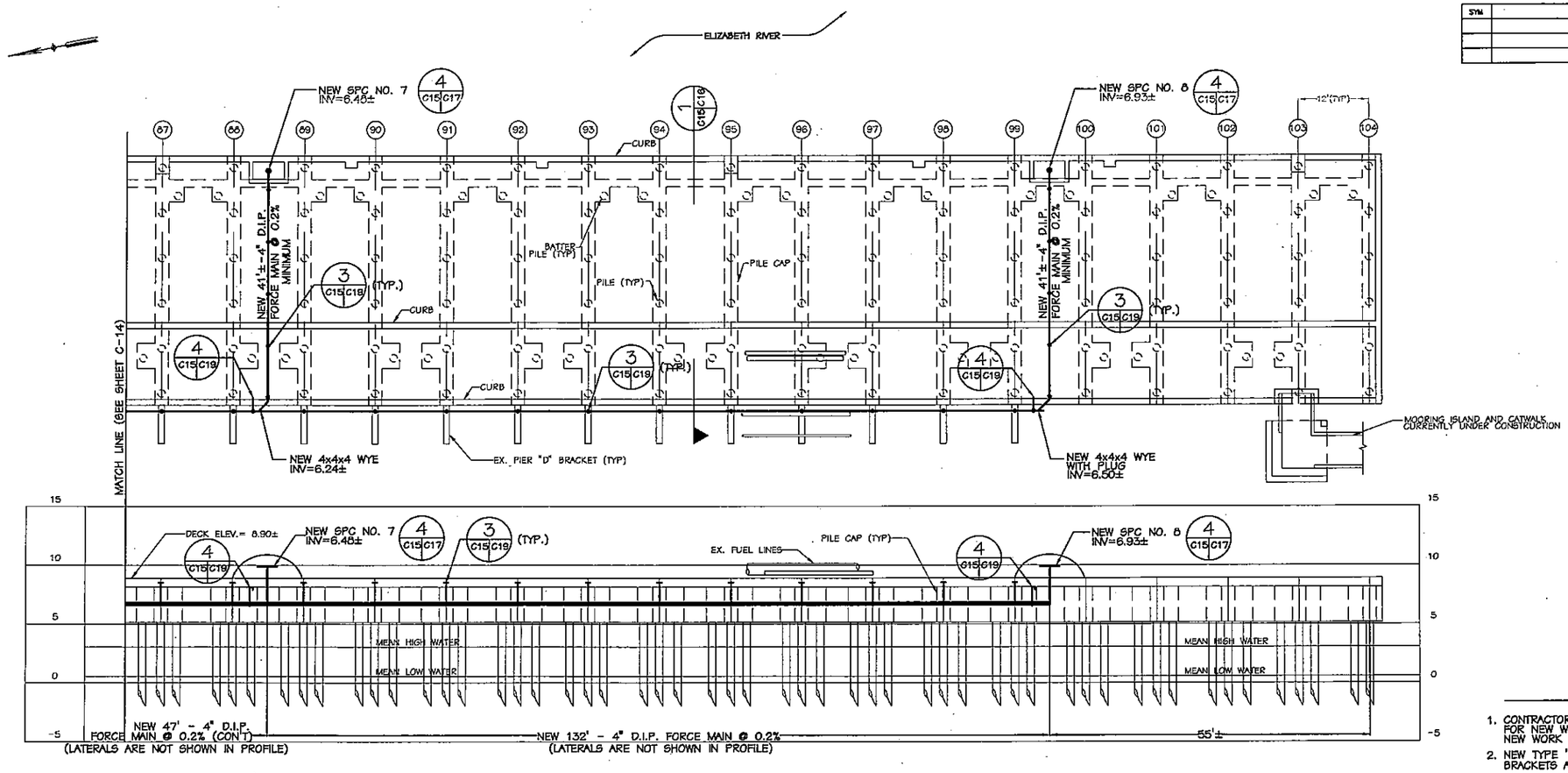

SEWER REPLACEMENT NOTES

1. CONTRACTOR SHALL FIELD VERIFY THE TYPE AND SIZE OF CONNECTIONS FOR NEW WORK PRIOR TO CONSTRUCTION TO ENSURE COMPATIBILITY OF NEW WORK WITH EXISTING.
2. NEW TYPE 'D' HANGERS SHALL BE PROVIDED AT EXISTING PIER "D" BRACKETS AS SHOWN IN PLAN AND PROFILE.
3. FOUR NEW TYPE 'D' HANGERS SHALL BE PROVIDED ALONG EACH LATERAL.
4. ALL NEW TYPE 'D' HANGERS UNDER THE PIER DECK FOR LATERALS SHALL BE PLACED IN THE SAME LOCATION WHERE THE OLD HANGERS WERE REMOVED. NO ADDITIONAL HOLES SHALL BE DRILLED IN THE EXISTING PIER DECK FOR THE NEW LATERAL HANGERS.
5. ALL NEW PIPE JOINT NUTS AND BOLTS SHALL BE CORROSION RESISTANT (STAINLESS) STEEL.
6. ALL DUCTILE IRON PIPE(D.I.P.) AND FITTINGS SHALL HAVE RESTRAINED MECHANICAL JOINTS UNLESS OTHERWISE NOTED.
7. ALL NEW SUPPORTING HARDWARE SHALL BE GALVANIZED STEEL.

5 C15/C17

GRAPHIC SCALES

HOR: 1" = 10' (10 0 10 20 30 40)

VERT: 1" = 5' (5 0 5 10 15 20)

C-15

PHR&A
PATTON HARRIS RIZZO & ASSOCIATES, PC
VIRGINIA BEACH, VIRGINIA

COMMONWEALTH OF VIRGINIA
DAVID C. JACKSON
No. 025246
9-27-96
PROFESSIONAL ENGINEER

JOB ORDER NUMBER: 1204827
DESIGNED: DCJ/JST/DBP
DRAWN: E.F./JST/DBP
CHECKED: DCJ
F.B. COLE, JR., P.E.
SR. MGR.
EIC JOHN M. SMITH, P.E.
R.H. IVES, JR., P.E.
ENGINEERING DIRECTOR
APPROVED: L. JOHNSTON DATE: 7/1/96
SATISFACTORY TO ACTIVITY
APPROVED: DATE: 10/22/96
FOR C.O. FOR COMMANDER, NAVFAC

DEPARTMENT OF THE NAVY — NAVAL FACILITIES ENGINEERING COMMAND
NAVY PUBLIC WORKS CENTER
NAVAL STATION — NORFOLK, VIRGINIA
CRANEY ISLAND FUEL DEPOT — PORTSMOUTH, VIRGINIA

REPLACE SEWER LINES, PIERS "C" & "D"

PIER "D" NEW WORK-PLAN AND PROFILE

SIZE	CODE ID NO.	FWC DRAWING NO.	NAVFAC NO.
D	80091	155840	4334119

CONSTR. CONTR. NO. N62470-96-B-5055
SCALE: GRAPHIC
SPEC. 05-96-3055
SHEET 18 OF 20

PHR&A #9023-1-6

C:\J0B5\9023-1-6\C-15 Wed Sep 25 10:07:29 1996

REVISIONS				
SYM	DESCRIPTION	DATE	SATISFACTORY	APPROVED BY

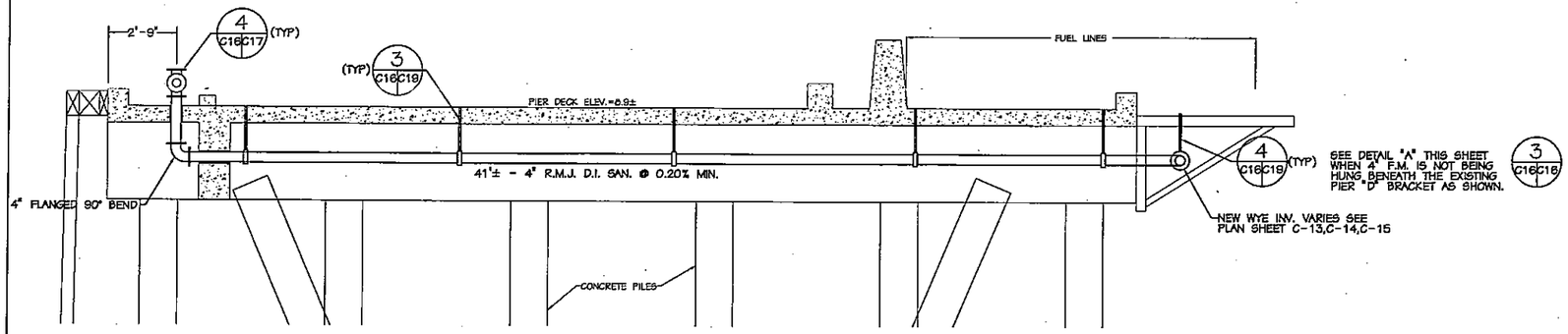

1 C14C16 C15 SOUTH SECTION PIER "D" (TYP.)
SCALE: 3/8" = 1'-0"

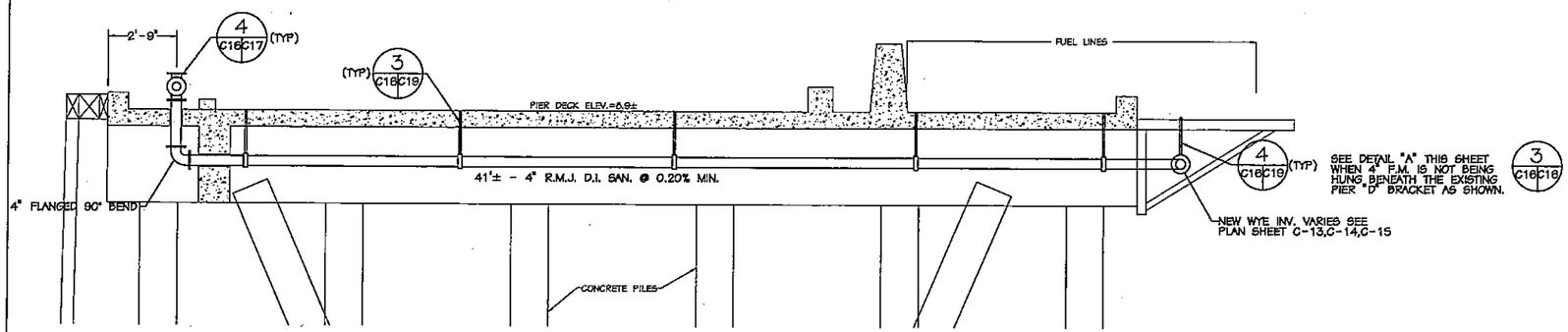

2 C13C16 C14 NORTH SECTION PIER "D" (TYP.)
SCALE: 3/8" = 1'-0"

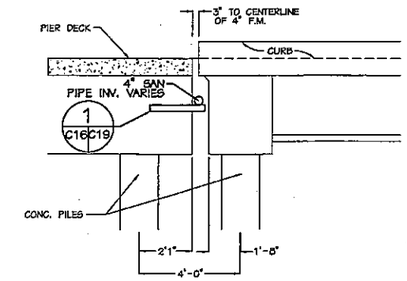

5 C13C16 C14 PIER "D" SECTION
SCALE: 3/8" = 1'-0"

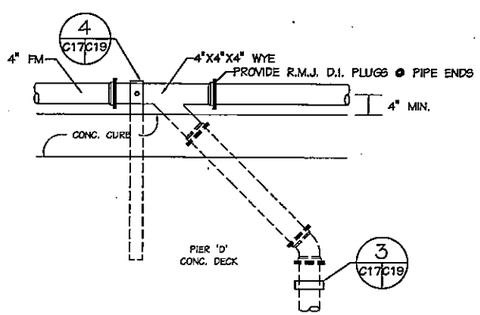

1. PROVIDE M.J. RETAINER GLANDS ON ALL FITTINGS.
2. ALL PIPE JOINT NUTS AND BOLTS SHALL BE STAINLESS STEEL.

3 C16C16 DETAIL "A"
SCALE: 3/4" = 1'-0"

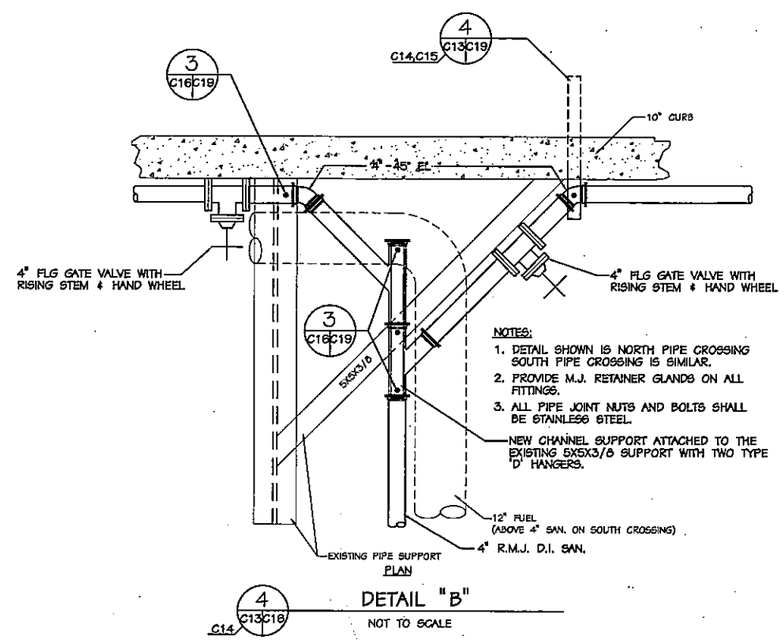

NOTES:
1. DETAIL SHOWN IS NORTH PIPE CROSSING SOUTH PIPE CROSSING IS SIMILAR.
2. PROVIDE M.J. RETAINER GLANDS ON ALL FITTINGS.
3. ALL PIPE JOINT NUTS AND BOLTS SHALL BE STAINLESS STEEL.

NEW CHANNEL SUPPORT ATTACHED TO THE EXISTING 5X5X3/8 SUPPORT WITH TWO TYPE 'D' HANGERS.

4 C13C16 C14 DETAIL "B"
NOT TO SCALE

C-16

PHR&A
PATTON HARRIS RUST & ASSOCIATES, PC
VIRGINIA BEACH, VIRGINIA

COMMONWEALTH OF VIRGINIA
DAVID C. JACKSON
No. 025246
4-27-96
PROFESSIONAL ENGINEER

JOB ORDER NUMBER: 1204827	DEPARTMENT OF THE NAVY — NAVAL FACILITIES ENGINEERING COMMAND
DESIGNED: DCJ/JST/DBP	NAVY PUBLIC WORKS CENTER
DRAWN: E.F./JST/DBP	NAVAL STATION — NORFOLK, VIRGINIA
CHECKED: DCJ	CRANEY ISLAND FUEL DEPOT — PORTSMOUTH, VIRGINIA
F.B. COLE, JR., P.E. BR. MGR.	REPLACE SEWER LINES, PIERS "C" & "D"
EIC JOHN M. SMITH, P.E.	
R.H. IVES, JR., P.E. ENGINEERING DIRECTOR	PIER "D" SECTIONS & DETAILS
APPROVED: L. JOHNSTON DATE: 7/1/96 SATISFACTORY TO ACTIVITY	SIZE D — CODE ID NO. 80091 — PWC DRAWING NO. 15584P — NAVFAC NO. 4334120
APPROVED: DATE: 11/28/96 FOR C.O. FOR COMMANDER, NAVFAC	CONSTR. CONTR. NO. N62470-96-B-5055
	SCALE: GRAPHIC — SPEC. 05-96-5055 — SHEET 17 OF 20

PHR&A #9023-1-6

C:\JOBS\9023-1-6\C-16 Wed Sep 25 11:53:13 1996

REVISIONS				
SYM	DESCRIPTION	DATE	SATISFACTORY	APPROVED BY

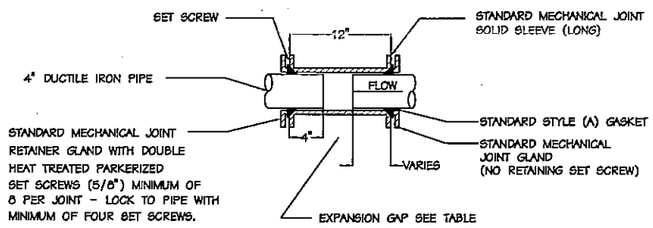

TABLE FOR EXPANSION

AMBIENT (MEAN) TEMPERATURE	EXPANSION GAP (INCHES)
40	3"
50	2 5/8"
60	2 3/8"
70	2 1/16"
80	1 3/4"
90	1 1/2"

1 / C9 C16 — TYPICAL EXPANSION JOINT

NOT TO SCALE

C10, C13,C14

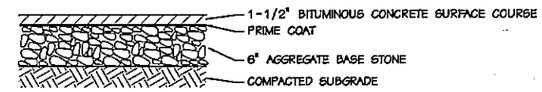

2 / C11 C16 — TYPICAL PAVEMENT SECTION

NOT TO SCALE

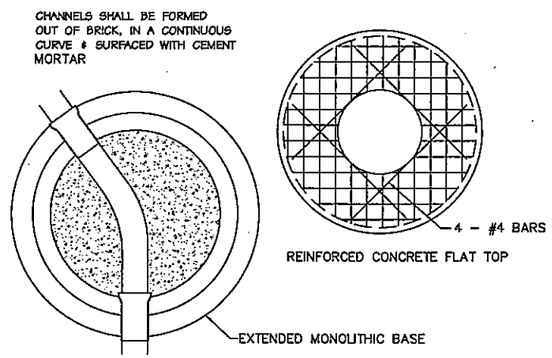

NOTES:

1. MANHOLE SHALL MEET ALL REQUIREMENTS OF ASTM C-478-72.
2. O-RING JOINT SHALL MEET ALL REQUIREMENTS OF ASTM C-361 AND C-443.
3. CONCRETE SHALL HAVE MIN. COMPRESSIVE STRENGTH OF 4,000 PSI.
4. REINFORCING FABRIC SHALL MEET ASTM A-185-72 .12 IN^2/FT.
5. BASES SHALL BE EXTENDED MONOLITHIC TYPE.
6. ALL MANHOLES SHALL RECEIVE INSIDE APPLICATION OF SIKAGARD HI-BILD OR APPROVED EQUAL, APPLIED ACCORDING TO MANUFACTURERS SPECS.
7. MAX. DEPTH FOR 48" MH WITH 5" WALL SHALL BE 12'. OVER 12' USE 60" MH WITH 6" WALL.
8. MH STEPS SHALL BE OLIVER "SURE STEP" OR APPROVED EQUAL AND SHALL BE CAST IN PLACE.
9. CONTRACTOR MUST USE STUBS OF APPROVED PIPE IN & OUT OF MH NOT TO EXTEND PAST MONOLITHIC BASE.
10. MORTARED AREAS OTHER THAN BENCH & INVERT TO BE COATED WITH SIKAGARD HI-BILD.

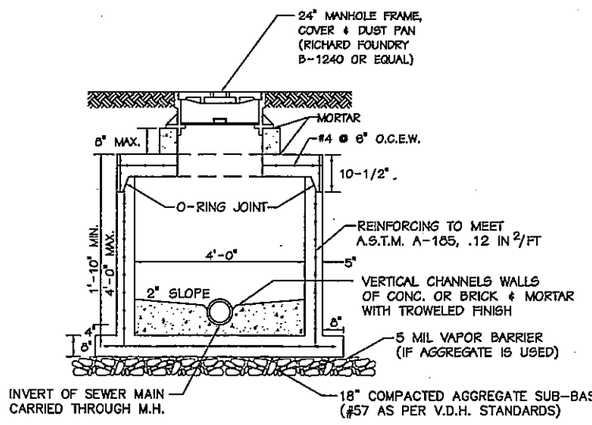

NOTE: CONTRACTOR SHALL RECONNECT ALL EXISTING INCOMING AND OUTGOING LINES TO THE NEW SHALLOW PRECAST SEWER MANHOLE AT THE NORTH PIER APPROACH.

3 / C12 C16 — SHALLOW PRECAST SEWER MANHOLE

NOT TO SCALE

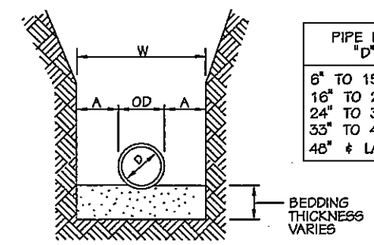

PIPE DIA. "D"	MAXIMUM "A"
6" TO 15"	8"
16" TO 21"	10"
24" TO 30"	12"
33" TO 42"	15"
48" & LARGER	18"

MAXIMUM TRENCH WIDTH "W" TAKEN AT TOP OF PIPE

NOTE: PROVIDE BEDDING IN ACCORDANCE WITH THE SPECIFICATIONS

STANDARD PIPE TRENCH WIDTH

NOT TO SCALE

C-18

PHR&A — PATTON HARRIS RUST & ASSOCIATES, PC VIRGINIA BEACH, VIRGINIA

COMMONWEALTH OF VIRGINIA — DAVID C. JACKSON — No. 025246 — 9-27-96 — PROFESSIONAL ENGINEER

JOB ORDER NUMBER: 1204827
DESIGNED: DCJ/JJST/DBP
DRAWN: E.F./JJST/DBP
CHECKED: DCJ
F.B. COLE, JR., P.E.
BR. MGR.
EC JOHN M. SMITH, P.E.
R.H. IVES, JR., P.E.
ENGINEERING DIRECTOR
APPROVED: DATE: 7/1/96
SATISFACTORY TO ACTIVITY
APPROVED: DATE: 10/22/96
FOR C.O. FOR COMMANDER, NAVFAC

DEPARTMENT OF THE NAVY — NAVAL FACILITIES ENGINEERING COMMAND
NAVY PUBLIC WORKS CENTER
NAVAL STATION — NORFOLK, VIRGINIA
CRANEY ISLAND FUEL DEPOT — PORTSMOUTH, VIRGINIA

REPLACE SEWER LINES, PIERS "C" & "D"

DETAILS

SIZE	CODE ID NO.	F.W.C. DRAWING NO.	NAVFAC NO.
D	80091	15584R	4334122

CONSTR. CONTR. NO. N62470-96-B-5055
SCALE: GRAPHIC — SPEC. 05-96-5055 — SHEET 19 OF 20

PHR&A #9023-1-6

C:\JOBS\9023-1-5\C-18 Wed Sep 25 12:12:11 1996

REVISIONS			
SYM.	DESCRIPTION	DATE	APPROVED

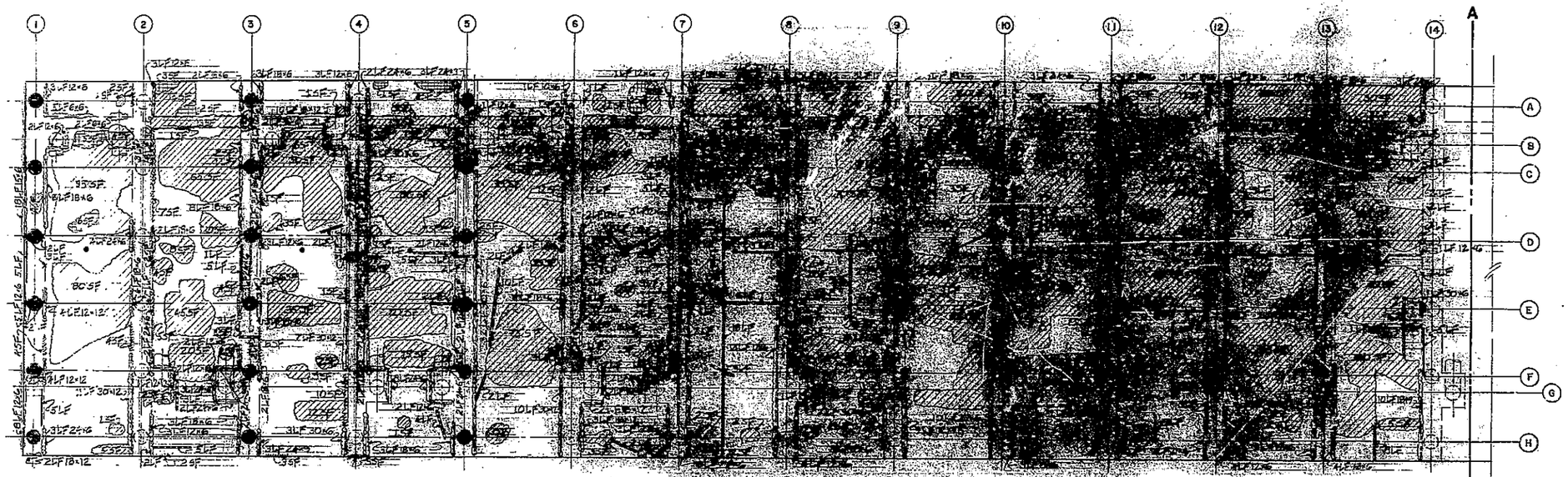

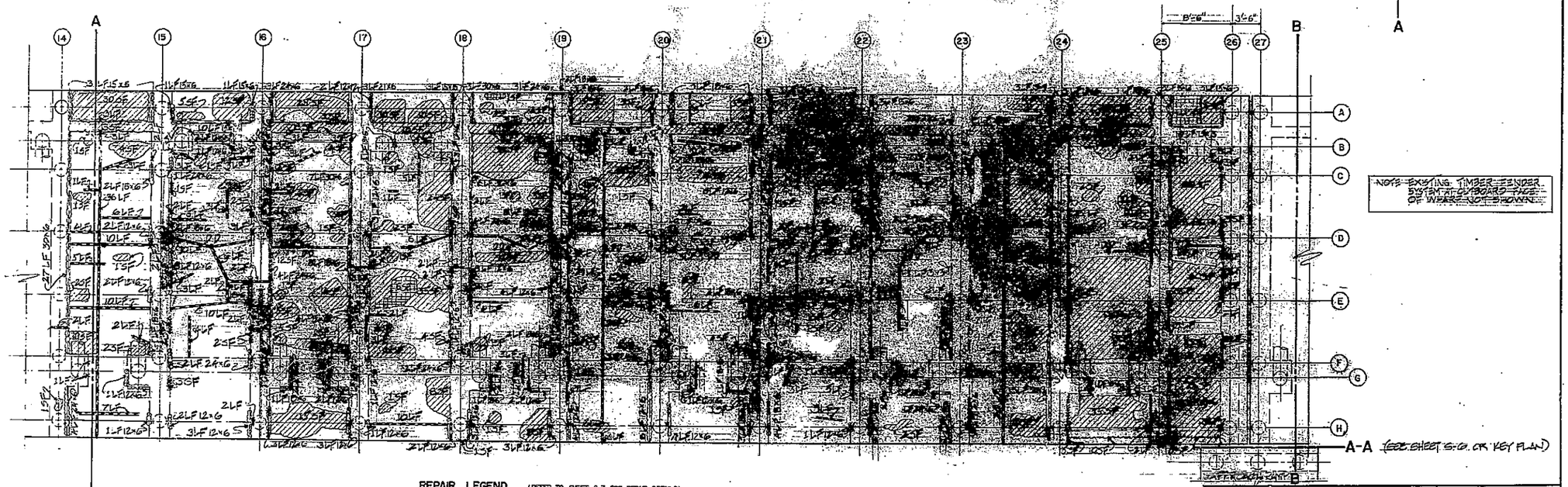

NOTE: DIMENSIONS BETWEEN BENTS 1 THRU 25 EQUAL 12'-0". DIMENSIONS BETWEEN BENTS 25 THRU 27 AS SHOWN.

L.F = LINEAR FEET
S.F = SQUARE FEET
IN. = INCHES
PLASTIC BARRIER WRAP
DD DECK DRAIN

REPAIR LEGEND (REFER TO SHEET S-7 FOR REPAIR DETAILS)

L.F.	IN. x IN.	CORNER SPALL (HEIGHT x DEPTH)
S.F.		SIDE SPALL
L.F.		CRACK ON BOTTOM OF DECK OR BEAM
L.F.		CRACK ON SIDE OF BEAM
L.F.		VERTICAL CRACK
S.F.		SOFFIT SPALL (BOTTOM OF DECK OR BEAM)
S.F.		DETERIORATED REINFORCING
		DETERIORATED PILE

GRAPHIC SCALE

3/16" = 1'-0"

KEY PLAN

RECORD DRAWING LETTER DATED 06 AUG 1980

S-2

GLDINI-ROLLING AND ASSOCIATES CONSULTING ENGINEERS NORFOLK, VIRGINIA

DEPARTMENT OF THE NAVY NAVAL FACILITIES ENGINEERING COMMAND ATLANTIC DIVISION NAVAL STATION NORFOLK, VIRGINIA

NAVAL SUPPLY CENTER, CRANEY ISLAND PORTSMOUTH, VIRGINIA

REPAIRS TO WHARF "D"

PLAN - BENTS 1 TO 27

STRUCTURAL

SIZE	CODE IDENT NO.	NAVFAC DRAWING NO.
F	80091	4043115

CONTR. CONTR. NO. N62470-77-B-7618

SCALE 3/16" = 1'-0" SPEC. 05-77-7618 SHEET 2 OF 8

SYD DWG. NO. 145115

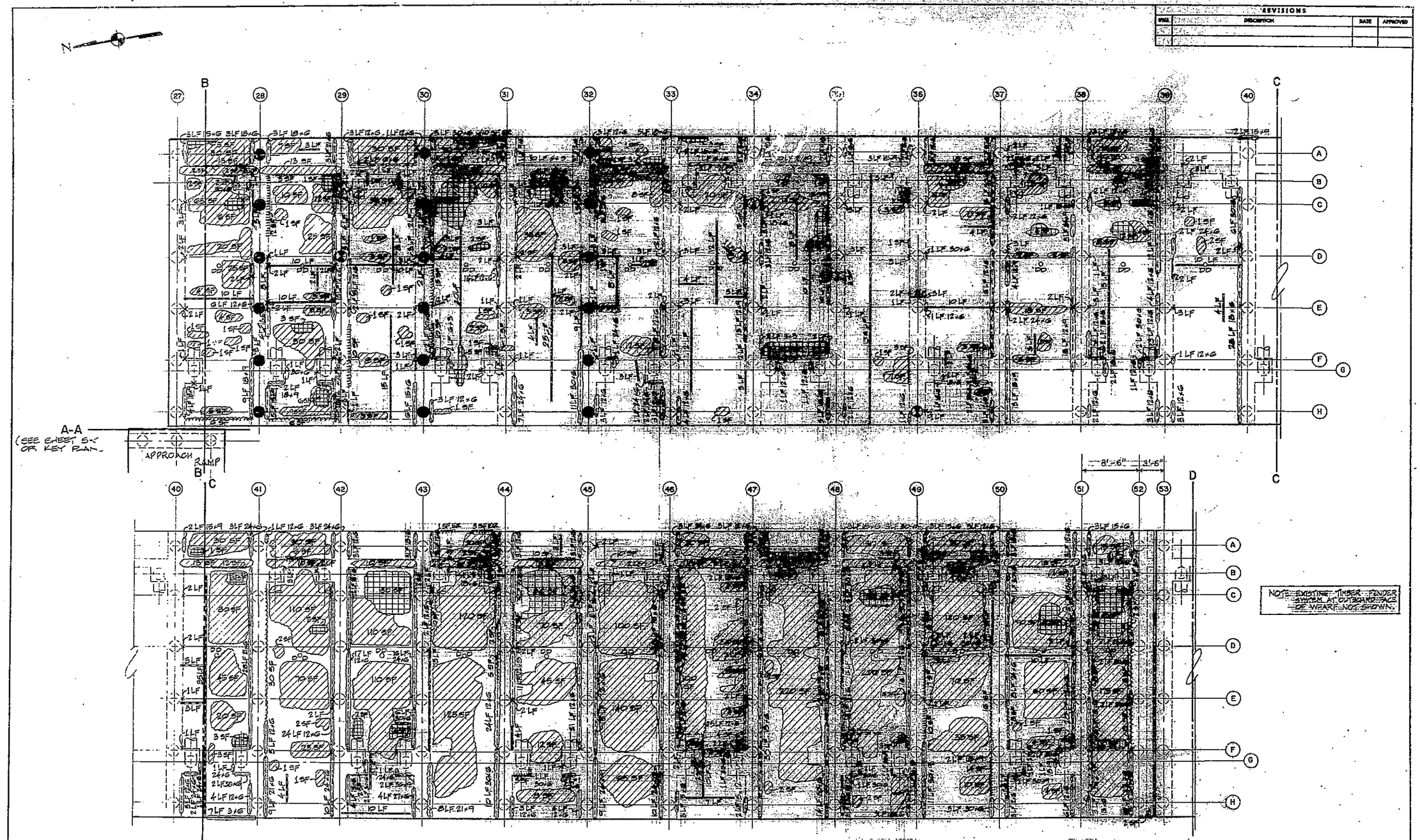

REVISIONS

SYM.	DESCRIPTION	DATE	APPROVED

REPAIR LEGEND (REFER TO SHEET S-7 FOR REPAIR DETAILS)

	L.F. - IN. x IN.	CORNER SPALL (HEIGHT x DEPTH)
	S.F.	SIDE SPALL
	L.F.	CRACK ON BOTTOM OF DECK OR BEAM
	L.F.	CRACK ON SIDE OF BEAM
	L.F.	VERTICAL CRACK
	S.F.	SOFFIT SPALL (BOTTOM OF DECK OR BEAM)
	S.F.	DETERIORATED REINFORCING
		DETERIORATED PILE

L.F. = LINEAR FEET
S.F. = SQUARE FEET
IN. = INCHES
PLASTIC BARRIER WRAP
DECK DRAIN

NOTE: DIMENSIONS BETWEEN BENTS 27 THRU 51 EQUALS 12'-0" DIMENSIONS BETWEEN BENTS 51 THRU 53 AS NOTED.

GRAPHIC SCALE

3/16" = 1'-0"

MATCH LINE (TYP)

KEY PLAN

RECORD DRAWING LETTER DATED 08 AUG 1980

S-3

GLENN-ROLLINS AND ASSOCIATES
CONSULTING ENGINEERS
NORFOLK VIRGINIA

DEPARTMENT OF THE NAVY — NAVAL FACILITIES ENGINEERING COMMAND
ATLANTIC DIVISION
NAVAL STATION NORFOLK, VIRGINIA

NAVAL SUPPLY CENTER, CRANEY ISLAND PORTSMOUTH, VIRGINIA

REPAIRS TO WHARF "D"
PLAN - BENTS 27 TO 53
STRUCTURAL

SIZE	CODE IDENT NO.	NAVFAC DRAWING NO.
F	80091	4043116

CONSTR. CONTR. NO. N62470-77-B-7618

SCALE 3/16" = 1'-0" SPEC. 05-77-7618 SHEET 3 OF 8

SPD DWG. NO. 143116

REVISIONS			
	DESCRIPTION	DATE	APPROVED

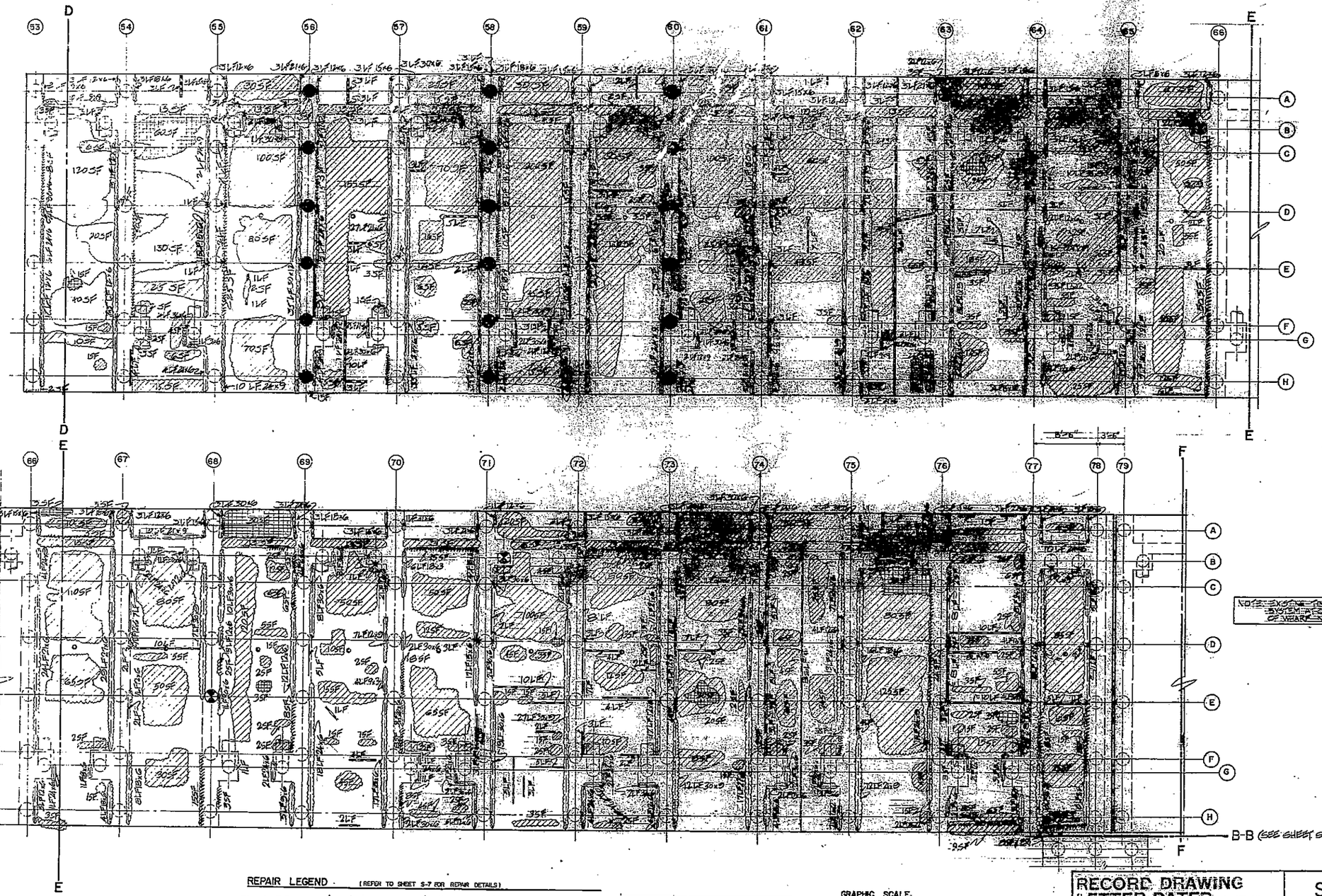

NOTE: EXISTING TIMBER FENDER SYSTEM AT OUTBOARD FACE OF WHARF NOT SHOWN.

REPAIR LEGEND (REFER TO SHEET S-7 FOR REPAIR DETAILS)

	L.F. IN. x IN.	CORNER SPALL (HEIGHT x DEPTH)
	S.F.	SIDE SPALL
	L.F.	CRACK (BOTTOM OF DECK OR BEAM)
	L.F.	CRACK (SIDE OF BEAM)
	L.F.	VERTICAL CRACK
	S.F.	SOFFIT SPALL (BOTTOM OF DECK OR BEAM)
	S.F.	DETERIORATED REINFORCING
		DETERIORATED PILE

L.F. = LINEAR FEET
S.F. = SQUARE FEET
IN. = INCHES
● PLASTIC BARRIER WRAP
●DD DECK DRAIN

NOTE: DIMENSIONS BETWEEN BENTS 77 AND 79 ARE DIFFERENT FROM DIMENSIONS BETWEEN BENTS 77 AND 79 AS SHOWN

GRAPHIC SCALE

3/16" = 1'-0"

5 4 3 2 1 0 5 10 15

B C D E F G - MATCH LINE (TYP)

A 27 53 79 104

A-A A-B

A B C D E F G

KEY PLAN

RECORD DRAWING
LETTER DATED 08 AUG 1980

S-4

GLENN-ROLLINS AND ASSOCIATES
CONSULTING ENGINEERS
NORFOLK, VIRGINIA

DEPARTMENT OF THE NAVY — NAVAL FACILITIES ENGINEERING COMMAND
ATLANTIC DIVISION
NAVAL STATION — NORFOLK, VIRGINIA
NAVAL SUPPLY CENTER, CRANEY ISLAND — PORTSMOUTH, VIRGINIA

DWN: DMC | DES: L.D.H. | CHK: DMC

REPAIRS TO WHARF "D"
PLAN - BENTS 53 TO 79
STRUCTURAL

APPROVED — DATE
OFFICER IN CHARGE
APPROVED 15 AUG 1979
FOR: CO, FOR COMMANDER NAVFAC

SIZE: F | CONT. NO. 80091 | NAVFAC DRAWING NO. 404317
CONTR. TOTAL NO. N62470-77-B-7618
SCALE 3/16"=1'-0" | SPEC. 05-77-7618 | SHEET 4 OF 8
BR. DWG. NO. 143117

REVISIONS				
SYM	DESCRIPTION	DATE	SATISFACTORY	APPROVED BY

REPLACE SEWER LINES, PIERS "C" & "D"
CRANEY ISLAND FUEL DEPOT
PORTSMOUTH, VIRGINIA
CONTRACT NO. N62470-96-B-5055

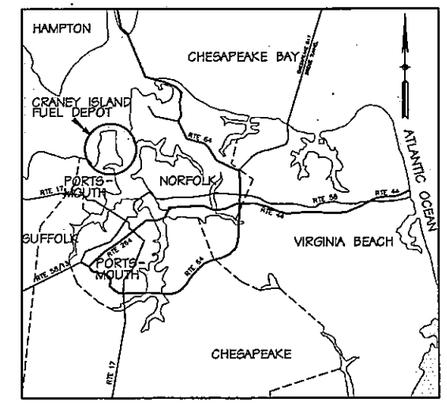

VICINITY MAP
NOT TO SCALE

INDEX TO DRAWINGS

SHEET NO.	SHEET TITLE	PWC DWG. NO.	NAVFAC DWG. NO.
T-1	TITLE SHEET	15584	4,334,104
C-1	SHEET INDEX	15584A	4,334,105
C-2	PIER "C" DEMOLITION PLAN	15584B	4,334,106
C-3	PIER "C" DEMOLITION PLAN	15584C	4,334,107
C-4	PIER "D" DEMOLITION PLAN - SHORESIDE	15584D	4,334,108
C-5	PIER "D" DEMOLITION PLAN	15584E	4,334,109
C-6	PIER "D" DEMOLITION PLAN	15584F	4,334,110
C-7	PIER "D" DEMOLITION PLAN	15584G	4,334,111
C-8	PIER "C" NEW WORK - PLAN AND PROFILE	15584H	4,334,112
C-9	PIER "C" NEW WORK - PLAN AND PROFILE	15584I	4,334,113
C-10	PIER "C" NEW WORK - PLAN AND PROFILE	15584J	4,334,114
C-11	PIER "C" NEW WORK - PLAN AND PROFILE	15584K	4,334,115
C-12	PIER "D" NEW WORK - SHORESIDE	15584L	4,334,116
C-13	PIER "D" NEW WORK - PLAN AND PROFILE	15584M	4,334,117
C-14	PIER "D" NEW WORK - PLAN AND PROFILE	15584N	4,334,118
C-15	PIER "D" NEW WORK - PLAN AND PROFILE	15584O	4,334,119
C-16	PIER "D" SECTIONS AND DETAILS	15584P	4,334,120
C-17	PIER "C" SECTIONS AND DETAILS	15584Q	4,334,121
C-18	DETAILS	15584R	4,334,122
C-19	PIPE HANGER DETAILS	15584S	4,334,123

QUALITY CONTROL REVIEW

David C. Jackson 9-27-96
SIGNATURE DATE

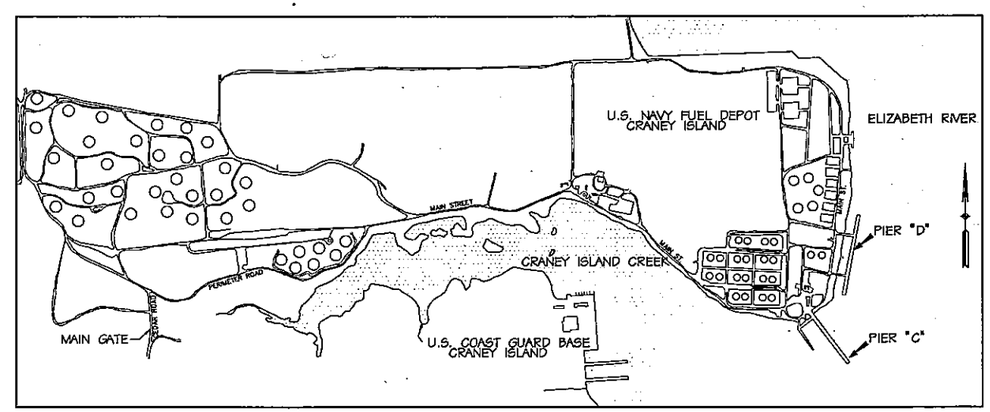

LOCATION MAP
NOT TO SCALE

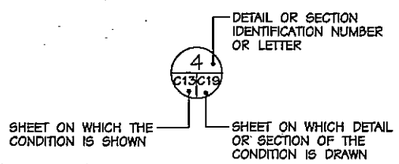

T-1

PHR&A

COMMONWEALTH OF VIRGINIA
DAVID C. JACKSON
No. 025246
9-27-96
PROFESSIONAL ENGINEER

JOB ORDER NUMBER: 1204827
DESIGNED: DCJ/JST/DBP
DRAWN: E.F./JST/DBP
CHECKED: DCJ
F.B. COLE, JR., P.E.
BR. MGR.
EIC JOHN M. SMITH, P.E.
R.H. IVES, JR., P.E.
ENGINEERING DIRECTOR
APPROVED: DATE:
SATISFACTORY TO ACTIVITY
APPROVED: DATE: 10/22/96
FOR C.O. FOR COMMANDER, NAVFAC

DEPARTMENT OF THE NAVY — NAVAL FACILITIES ENGINEERING COMMAND
NAVY PUBLIC WORKS CENTER
NAVAL STATION — NORFOLK, VIRGINIA
CRANEY ISLAND FUEL DEPOT — PORTSMOUTH, VIRGINIA

REPLACE SEWER LINES, PIERS "C" & "D"

TITLE SHEET

SIZE	CODE ID NO.	PWC DRAWING NO.	NAVFAC DWG NO.
D	80091	15584	4334104

CONSTR. CONTR. NO. N62470-96-B-5055
SCALE: GRAPHIC — SPEC. 05-96-5055 — SHEET 1 OF 20

PHR&A #9023-1-6

REVISIONS				
SYM	DESCRIPTION	DATE	SATISFACTORY	APPROVED BY

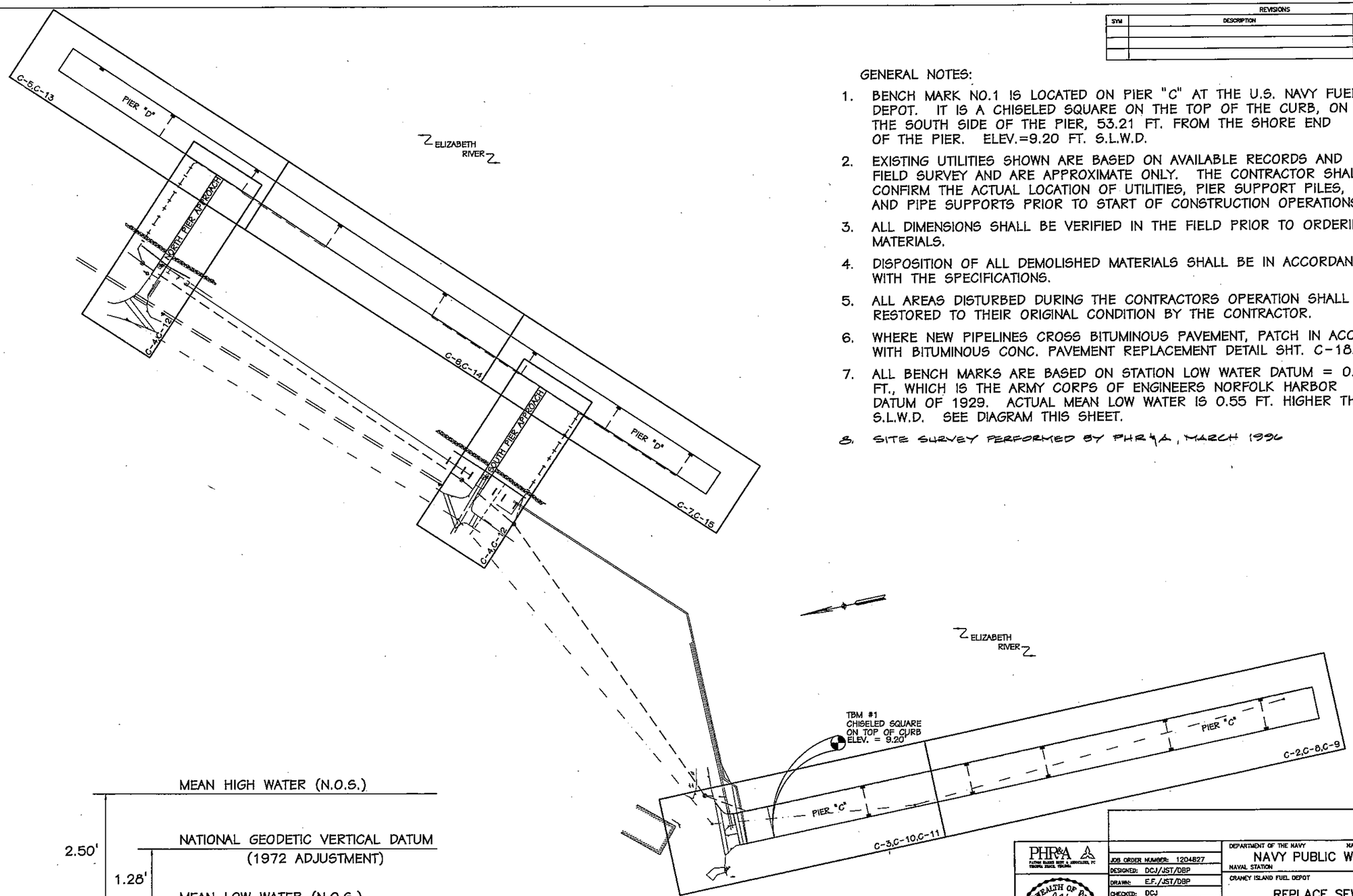

GENERAL NOTES:

1. BENCH MARK NO.1 IS LOCATED ON PIER "C" AT THE U.S. NAVY FUEL DEPOT. IT IS A CHISELED SQUARE ON THE TOP OF THE CURB, ON THE SOUTH SIDE OF THE PIER, 53.21 FT. FROM THE SHORE END OF THE PIER. ELEV.=9.20 FT. S.L.W.D.
2. EXISTING UTILITIES SHOWN ARE BASED ON AVAILABLE RECORDS AND FIELD SURVEY AND ARE APPROXIMATE ONLY. THE CONTRACTOR SHALL CONFIRM THE ACTUAL LOCATION OF UTILITIES, PIER SUPPORT PILES, AND PIPE SUPPORTS PRIOR TO START OF CONSTRUCTION OPERATIONS.
3. ALL DIMENSIONS SHALL BE VERIFIED IN THE FIELD PRIOR TO ORDERING MATERIALS.
4. DISPOSITION OF ALL DEMOLISHED MATERIALS SHALL BE IN ACCORDANCE WITH THE SPECIFICATIONS.
5. ALL AREAS DISTURBED DURING THE CONTRACTORS OPERATION SHALL BE RESTORED TO THEIR ORIGINAL CONDITION BY THE CONTRACTOR.
6. WHERE NEW PIPELINES CROSS BITUMINOUS PAVEMENT, PATCH IN ACCORDANCE WITH BITUMINOUS CONC. PAVEMENT REPLACEMENT DETAIL SHT. C-18.
7. ALL BENCH MARKS ARE BASED ON STATION LOW WATER DATUM = 0.00 FT., WHICH IS THE ARMY CORPS OF ENGINEERS NORFOLK HARBOR DATUM OF 1929. ACTUAL MEAN LOW WATER IS 0.55 FT. HIGHER THAN S.L.W.D. SEE DIAGRAM THIS SHEET.
8. SITE SURVEY PERFORMED BY PHR&A, MARCH 1996

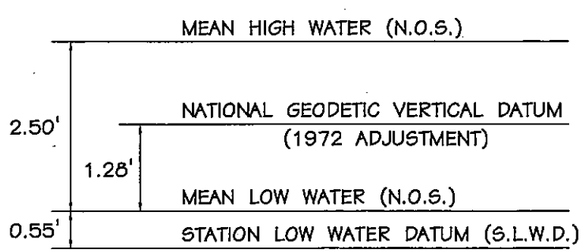

DIAGRAM OF DATUM PLANE

SHEET INDEX

C-1

PHR&A
PATTON HARRIS RIDDY & ASSOCIATES, PC
TRIONG, ISLAND, VIRGINIA

COMMONWEALTH OF VIRGINIA
DAVID C. JACKSON
No. 025246
9-27-96
PROFESSIONAL ENGINEER

JOB ORDER NUMBER: 1204827
DESIGNED: DCJ/JST/DBP
DRAWN: E.F./JST/DBP
CHECKED: DCJ
F.B. COLE, JR., P.E.
BR. MGR.
EIC JOHN M. SMITH, P.E.
R.H. IVES, JR., P.E.
ENGINEERING DIRECTOR
APPROVED: DATE: 7/1/96
L. JOHNSTON
SATISFACTORY TO ACTIVITY
APPROVED: DATE: 10/22/96
FOR C.O. FOR COMMANDER, NAVFAC

DEPARTMENT OF THE NAVY — NAVAL FACILITIES ENGINEERING COMMAND
NAVY PUBLIC WORKS CENTER
NAVAL STATION — NORFOLK, VIRGINIA
CRANEY ISLAND FUEL DEPOT — PORTSMOUTH, VIRGINIA

REPLACE SEWER LINES, PIERS "C" & "D"

SHEET INDEX

SIZE	CODE ID NO.	PWC DRAWING NO.	NAVFAC DWG NO.
D	80091	15584A	4334105
		CONSTR. CONTR. NO. N62470-96-B-5055	
SCALE: GRAPHIC		SPEC. 05-96-5055	SHEET 2 OF 20

PHR&A #9023-1-6

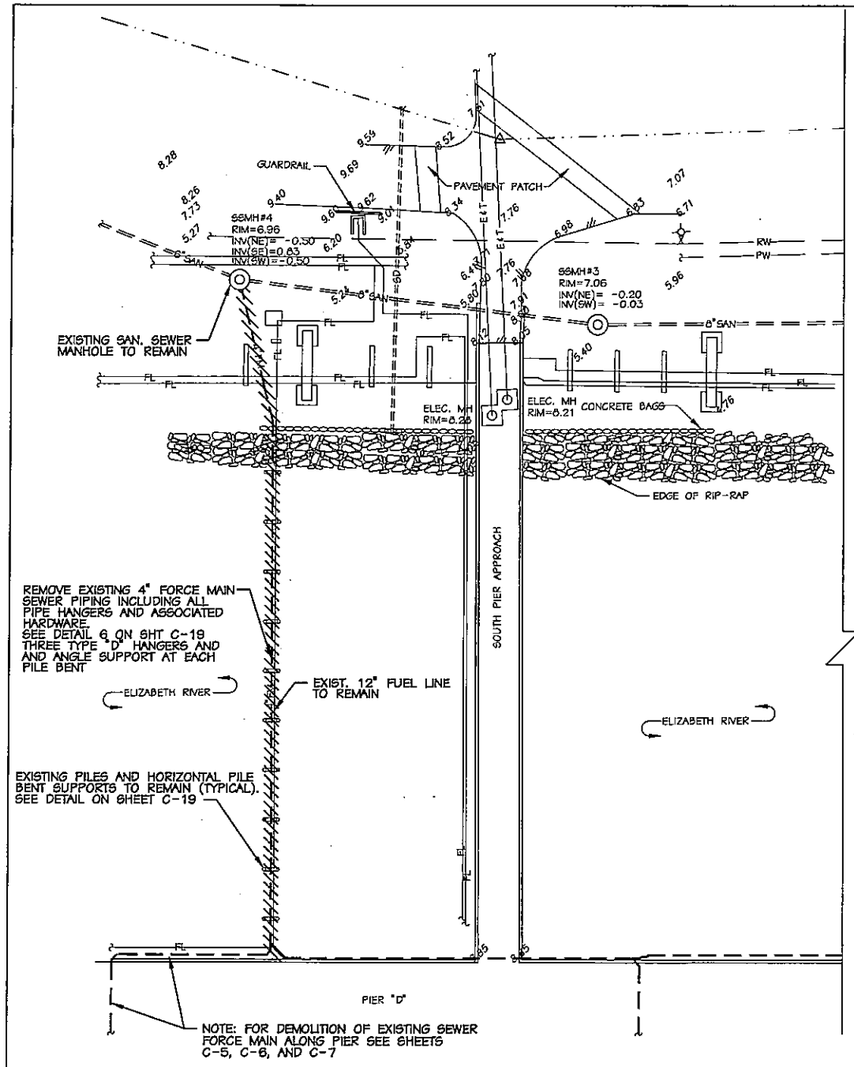

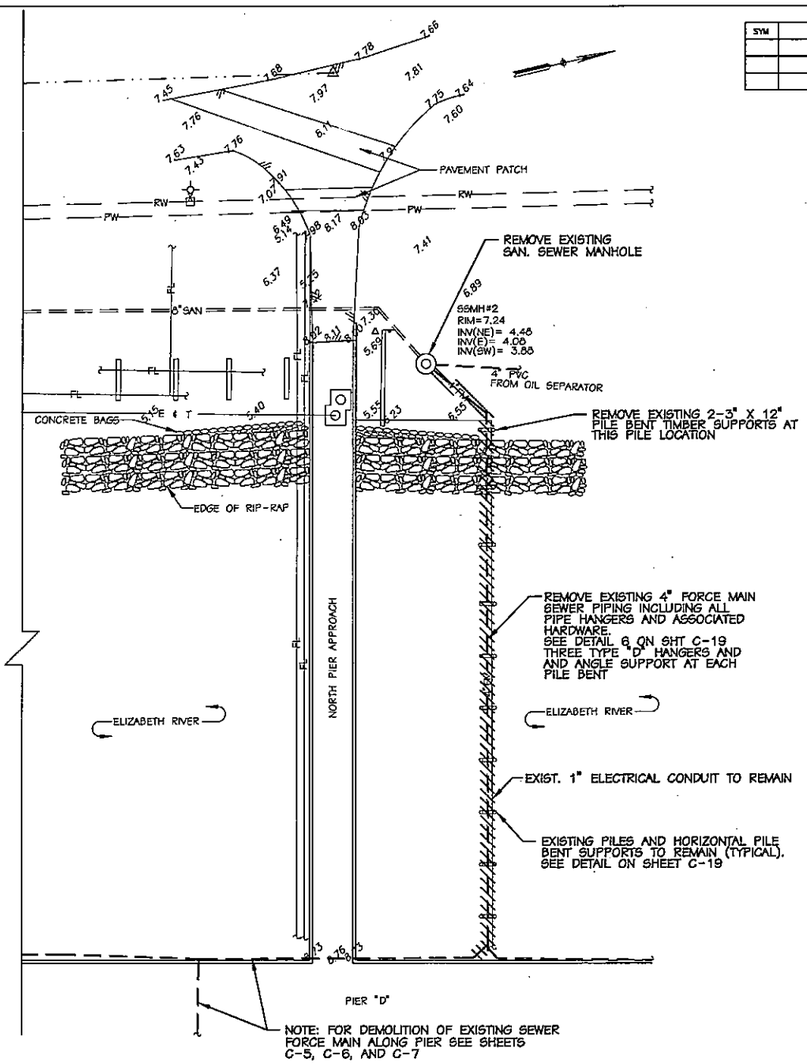

REVISIONS

SYM	DESCRIPTION	DATE	SATISFACTORY	APPROVED BY

LEGEND

- SPOT ELEVATION
- DIRECTION OF FLOW
- WATER LINE(POTABLE)
- WATER LINE(UNTREATED)
- VALVE
- FIRE HYDRANT
- CATCH BASIN
- MANHOLE
- STORM DRAIN LINE
- SANITARY DRAIN LINE(GRAVITY)
- SANITARY FORCE MAIN
- ELEC. & TEL. UNDERGROUND DUCT
- FUEL LINE
- BALLAST DRAIN LINE
- LIGHT OR POWER POLE
- ASPHALT PAVEMENT
- CONCRETE BAGS
- TELEPHONE PEDESTAL
- SURVEY BASELINE
- TRAVERSE POINT
- ELEC. MANHOLE

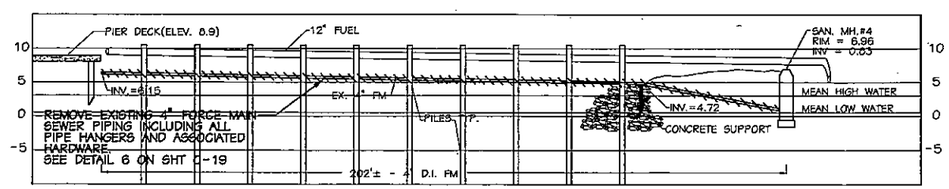

PROFILE: SOUTH PIPE CROSSING
HORZ : 1"=20' VERT. : 1"=10'

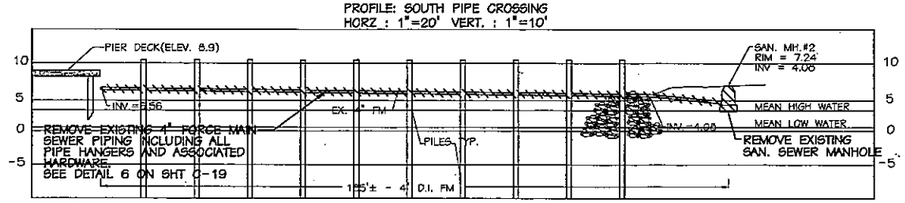

PROFILE: NORTH PIPE CROSSING
HORZ : 1"=20' VERT. : 1"=10'

GRAPHIC SCALES

HOR: 1" = 20' 20 0 20 40 60 80

C-4

PHR&A
PAXTON HUGHES, EITT & ASSOCIATES, PC
VIRGINIA BEACH, VIRGINIA

COMMONWEALTH OF VIRGINIA
DAVID C. JACKSON
No. 025246
9-27-96
PROFESSIONAL ENGINEER

JOB ORDER NUMBER:	1204827
DESIGNED:	DCJ/JST/DBP
DRAWN:	E.F./JST/DBP
CHECKED:	DCJ
F.B. COLE, JR., P.E. BR. MGR.	
EIC	JOHN M. SMITH, P.E.
R.H. IVES, JR., P.E. ENGINEERING DIRECTOR	
APPROVED: SATISFACTORY TO ACTIVITY	DATE: L. JOHNSTON 7/1/96
APPROVED: FOR C.O. FOR COMMANDER, NAVFAC	DATE: 9/27/96

DEPARTMENT OF THE NAVY — NAVAL FACILITIES ENGINEERING COMMAND
NAVY PUBLIC WORKS CENTER
NAVAL STATION — NORFOLK, VIRGINIA
CRANEY ISLAND FUEL DEPOT — PORTSMOUTH, VIRGINIA

REPLACE SEWER LINES, PIERS "C" & "D"

PIER "D" DEMOLITION PLAN—SHORESIDE

SIZE	CODE ID NO.	PWC DRAWING NO.	NAVFAC NO.
D	80091	15584D	4334108

CONSTR. CONTR. NO. N62470-96-B-5055
SCALE: GRAPHIC — SPEC. 05-96-5055 — SHEET 5 OF 20

PHR&A #9023-1-6

C:\DGN\9023-1-6\C-4 Tue Sep 24 15:19:27 1996

REVISIONS				
SYM	DESCRIPTION	DATE	SATISFACTORY	APPROVED BY

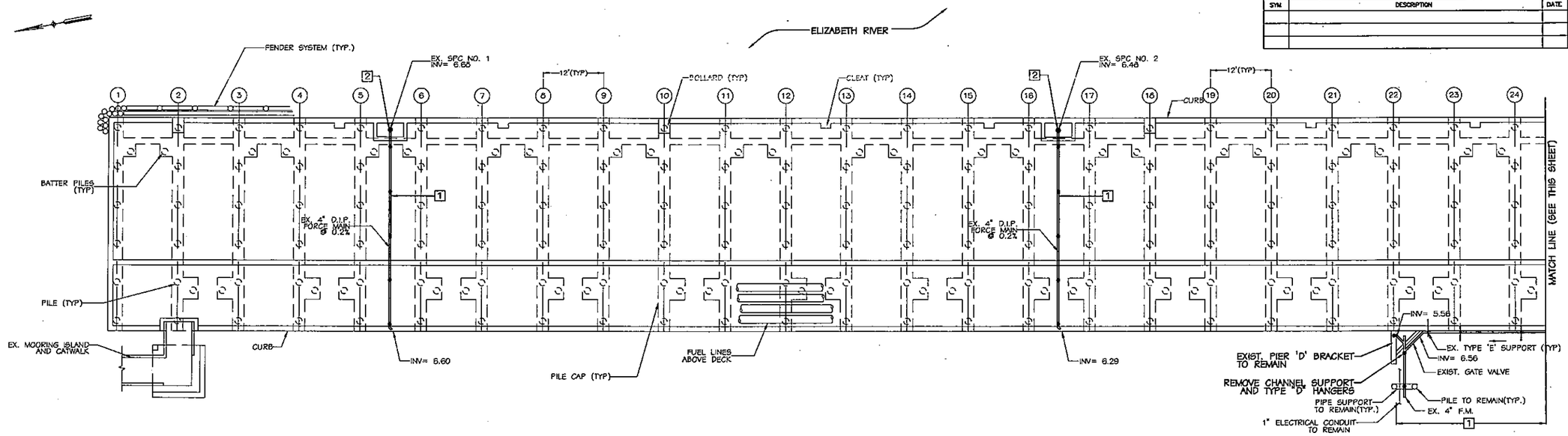

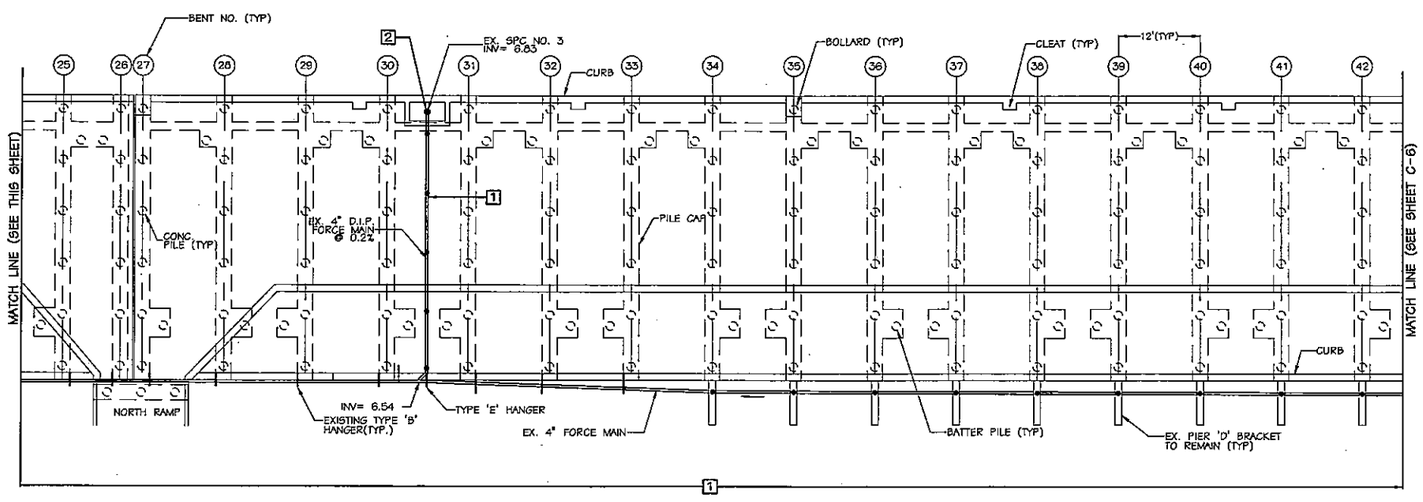

SEWER DEMOLITION NOTES

1. REMOVE EXISTING 4" FORCE MAIN SEWER PIPING INCLUDING ALL ASSOCIATED HARDWARE AND PIPE HANGERS(TYPE 'B', 'D' AND 'E'). EXISTING PIER "D" BRACKET USED TO PLACE NEW TYPE 'D' HANGERS SHALL REMAIN IN PLACE.
2. REMOVE SHIP-TO-PIER CONNECTION (SPC) AND ASSOCIATED HARDWARE, INCLUDING LATERALS, HANGERS AND SPC GUARDRAIL.

GRAPHIC SCALE

1" = 10' 10 0 10 20 30 40

C-5

PHR&A

JOB ORDER NUMBER: 1204827
DESIGNED: DCJ/JST/DBP
DRAWN: E.F./JST/DBP
CHECKED: DCJ
F.B. COLE, JR., P.E.
BR. MGR.
EC JOHN M. SMITH, P.E.
R.H. IVES, JR., P.E.
ENGINEERING DIRECTOR
APPROVED: DATE:
SATISFACTORY TO ACTIVITY
APPROVED: DATE:
FOR CO. FOR COMMANDER, NAVFAC

COMMONWEALTH OF VIRGINIA
DAVID C. JACKSON
No. 025246
9-27-96
PROFESSIONAL ENGINEER

DEPARTMENT OF THE NAVY — NAVAL FACILITIES ENGINEERING COMMAND
NAVY PUBLIC WORKS CENTER
NAVAL STATION — NORFOLK, VIRGINIA
CRANEY ISLAND FUEL DEPOT — PORTSMOUTH, VIRGINIA

REPLACE SEWER LINES, PIERS "C" & "D"

PIER "D" DEMOLITION PLAN

SIZE	CODE ID NO.	PWC DRAWING NO.	NAVFAC NO.
D	80091	15584E	4334109

CONSTR. CONTR. NO. N62470-96-B-5055
SCALE: GRAPHIC — SPEC. 05-96-5055 — SHEET 6 OF 20

PHR&A #9023-1-6

REVISIONS				
SYM	DESCRIPTION	DATE	SATISFACTORY	APPROVED BY

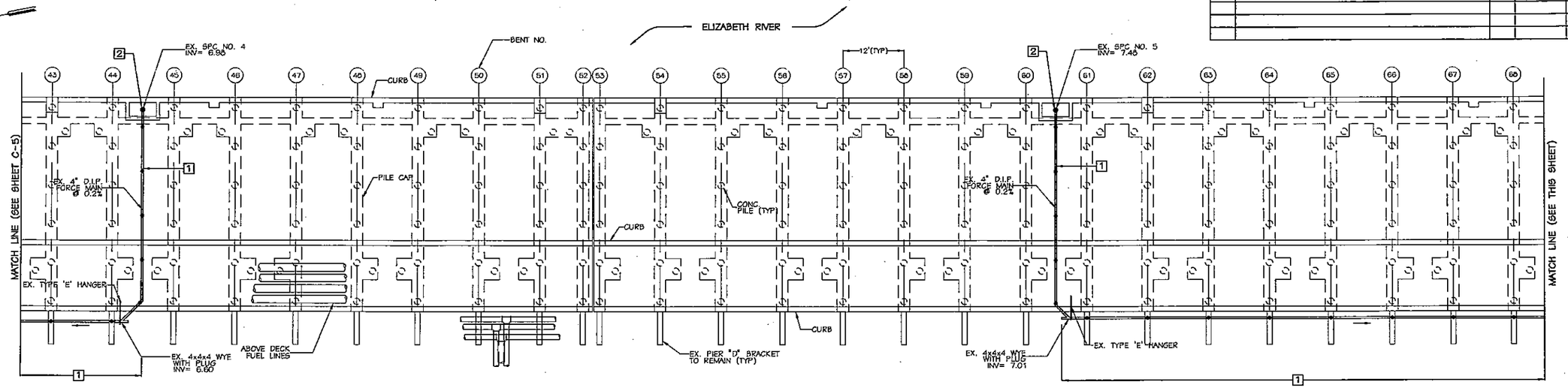

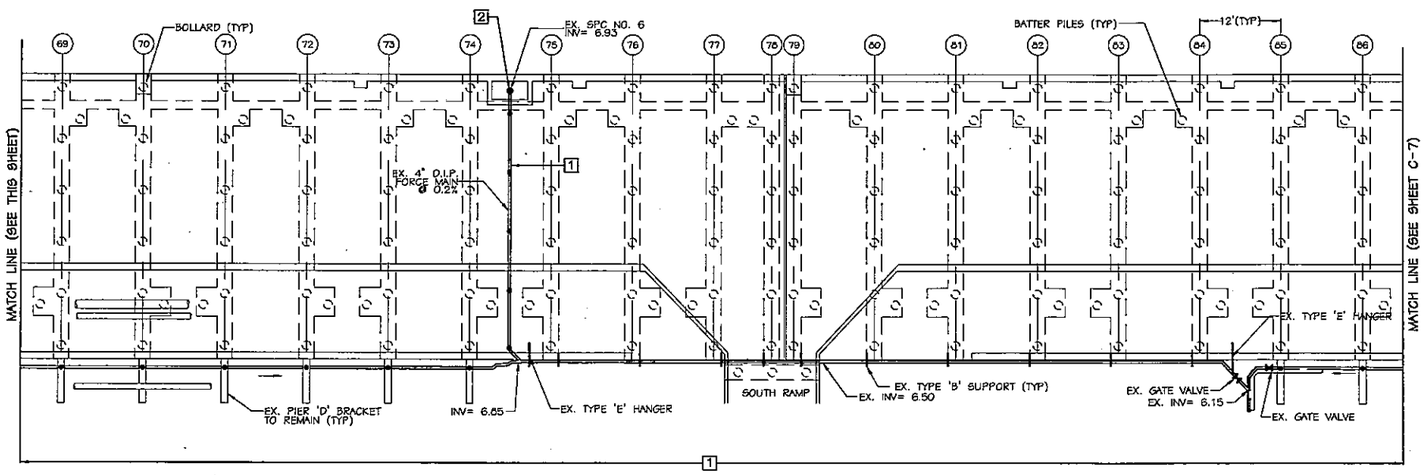

SEWER DEMOLITION NOTES

1. REMOVE EXISTING 4" FORCE MAIN SEWER PIPING INCLUDING ALL ASSOCIATED HARDWARE AND PIPE HANGERS(TYPE 'B', 'D' AND 'E'). EXISTING PIER "D" BRACKET USED TO PLACE NEW TYPE 'D' HANGERS SHALL REMAIN IN PLACE.
2. REMOVE SHIP-TO-PIER CONNECTION (SPC) AND ASSOCIATED HARDWARE, INCLUDING LATERALS, HANGERS AND SPC GUARDRAIL.

GRAPHIC SCALE

1" = 10' 10 0 10 20 30 40

C-6

PHR&A
PAYNE, HARRIS, RIDDY & ASSOCIATES, PC
VIRGINIA BEACH, VIRGINIA

COMMONWEALTH OF VIRGINIA
DAVID C. JACKSON
No. 025246
9-27-96
PROFESSIONAL ENGINEER

JOB ORDER NUMBER:	1204827
DESIGNED:	DCJ/JST/DBP
DRAWN:	E.F./JST/DBP
CHECKED:	DCJ
F.B. COLE, JR., P.E. SR. MGR.	
EIC	JOHN M. SMITH, P.E.
R.H. IVES, JR., P.E. ENGINEERING DIRECTOR	
APPROVED: L. JOHNSTON DATE: 7/1/96 SATISFACTORY TO ACTIVITY	
APPROVED: FOR C.O. FOR COMMANDER, NAVFAC DATE: 10/25/96	

DEPARTMENT OF THE NAVY — NAVAL FACILITIES ENGINEERING COMMAND

NAVY PUBLIC WORKS CENTER
NAVAL STATION — NORFOLK, VIRGINIA
CRANEY ISLAND FUEL DEPOT — PORTSMOUTH, VIRGINIA

REPLACE SEWER LINES, PIERS "C" & "D"

PIER "D" DEMOLITION PLAN

SIZE	CODE ID NO.	PWC DWG. NO.	NAVFAC NO.
D	80091	15584F	4334110

CONSTR. CONTR. NO. N62470-96-B-5055
SCALE: GRAPHIC — SPEC. 05-96-5033 — SHEET 7 OF 20

PHR&A #9023-1-6

C:\J085\9023-1-6\C-6 Tue Sep 24 09:52:14 1996

REVISIONS				
SYM	DESCRIPTION	DATE	SATISFACTORY	APPROVED BY

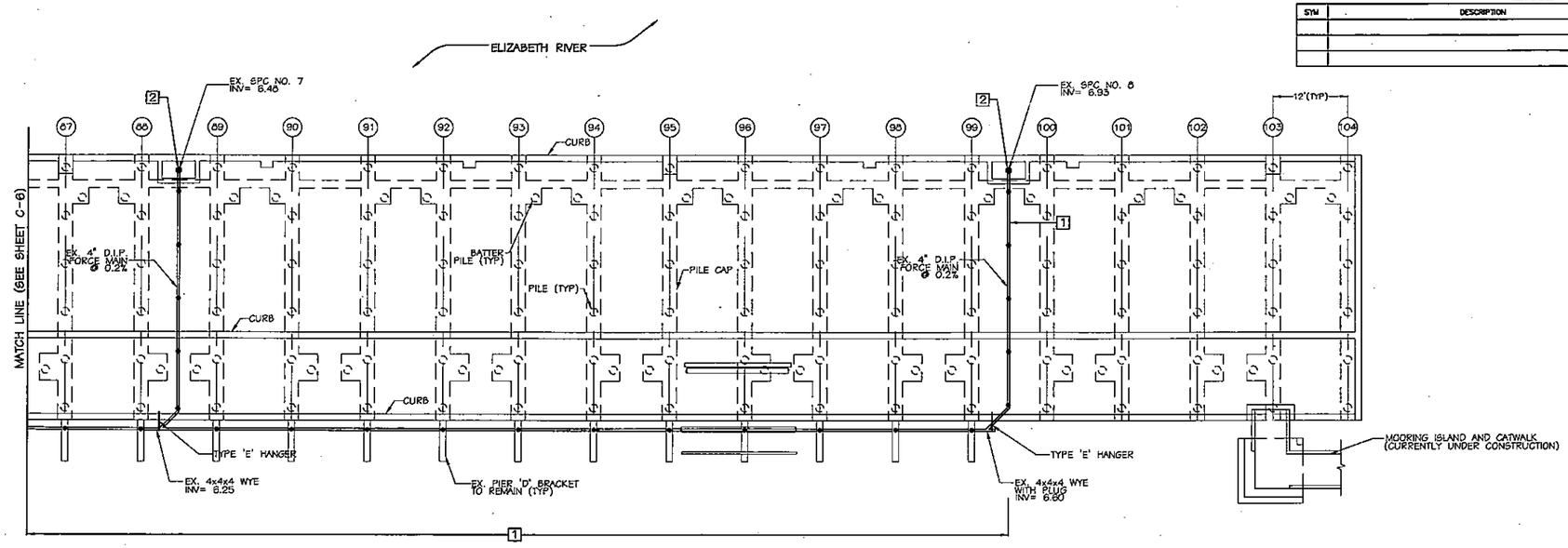

SEWER DEMOLITION NOTES

1. REMOVE EXISTING 4" FORCE MAIN SEWER PIPING INCLUDING ALL ASSOCIATED HARDWARE AND PIPE HANGERS(TYPE 'B', 'D' AND 'E'). EXISTING PIER "D" BRACKET USED TO PLACE NEW TYPE 'D' HANGERS SHALL REMAIN IN PLACE.
2. REMOVE SHIP-TO-PIER CONNECTION (SPC) AND ASSOCIATED HARDWARE, INCLUDING LATERALS, HANGERS AND SPC GUARDRAIL.

GRAPHIC SCALE

1" = 10' 10 0 10 20 30 40

C-7

PHR&A
PATTON HARRIS RUST & ASSOCIATES, PC
VIRGINIA BEACH, VIRGINIA

COMMONWEALTH OF VIRGINIA
DAVID E. JACKSON
No. 025246
9-27-96
PROFESSIONAL ENGINEER

JOB ORDER NUMBER: 1204827
DESIGNED: DCJ/JST/DBP
DRAWN: E.F./JST/DBP
CHECKED: DCJ
F.B. COLE, JR., P.E.
BR. MGR.
EIC JOHN M. SMITH, P.E.
R.H. IVES, JR., P.E.
ENGINEERING DIRECTOR
APPROVED: DATE:
L. JOHNSTON 7/1/96
SATISFACTORY TO ACTIVITY
APPROVED: DATE:
FOR C.O. FOR COMMANDER, NAVFAC

DEPARTMENT OF THE NAVY — NAVAL FACILITIES ENGINEERING COMMAND
NAVY PUBLIC WORKS CENTER
NAVAL STATION — NORFOLK, VIRGINIA
CRANEY ISLAND FUEL DEPOT — PORTSMOUTH, VIRGINIA

REPLACE SEWER LINES, PIERS "C" & "D"

PIER "D" DEMOLITION PLAN

SIZE	CODE ID NO.	FUEC DRAWING NO.	NAVFAC NO.
D	80091	15584G	4334111

CONSTR. CONTR. NO. N62470-96-B-5055
SCALE: GRAPHIC SPEC. 05-96-5055 SHEET 8 OF 20

PHR&A #9023-1-6

C:\WORK\9023-1-6\C-7 Tue Sep 24 11:23:41 1996

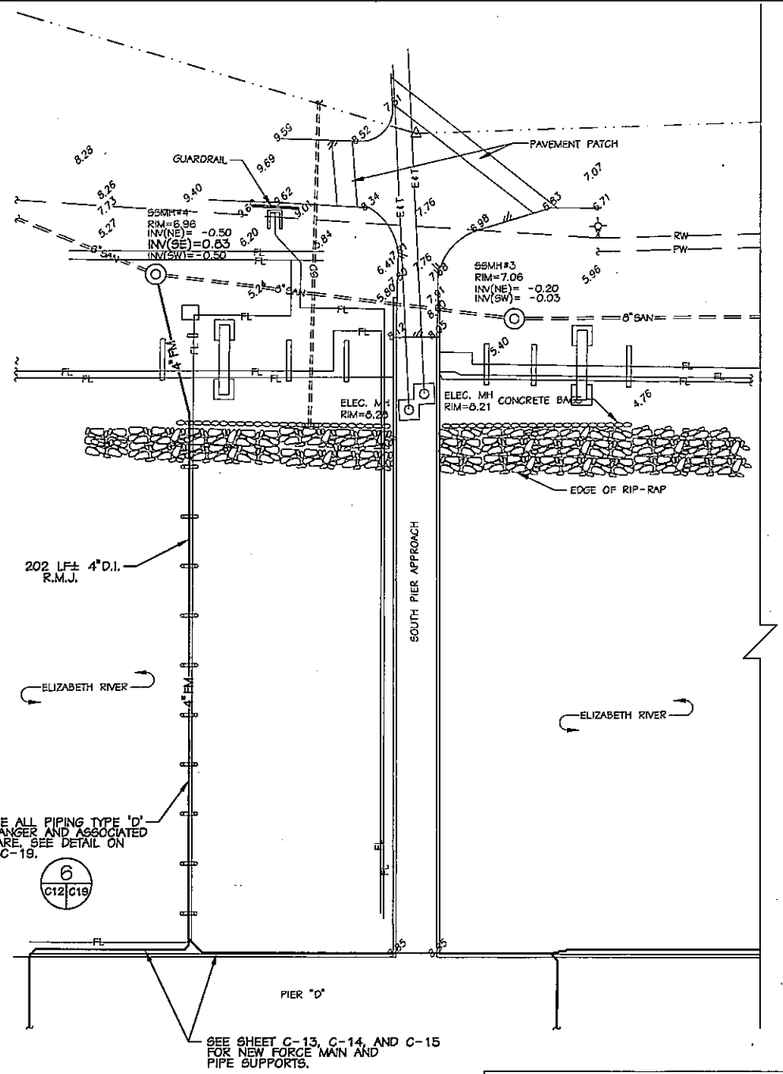

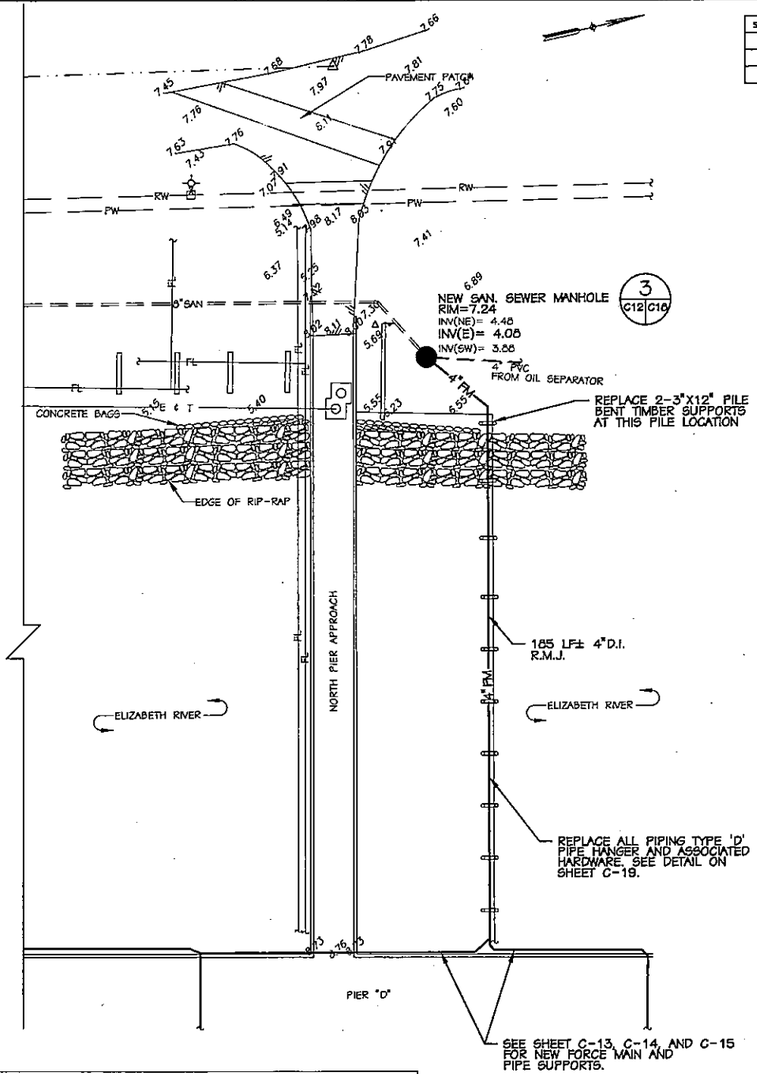

REVISIONS				
SYM	DESCRIPTION	DATE	SATISFACTORY	APPROVED BY

LEGEND

	EXISTING	NEW
SPOT ELEVATION	7.60	
DIRECTION OF FLOW		
WATER LINE(POTABLE)	PW	
WATER LINE(UNTREATED)	RW	
VALVE		
FIRE HYDRANT		
CATCH BASIN		
MANHOLE		
STORM DRAIN LINE	SD	
SANITARY DRAIN LINE(GRAVITY)	SAN	
SANITARY FORCE MAIN	FM	4" FM
ELEC. & TEL. UNDERGROUND DUCT	E & T	
FUEL LINE	FL	
BALLAST DRAIN LINE	B	
LIGHT OR POWER POLE		
ASPHALT PAVEMENT		
CONCRETE BAGS		
TELEPHONE PEDESTAL		
SURVEY BASELINE		
TRAVERSE POINT		
ELEC. MANHOLE		

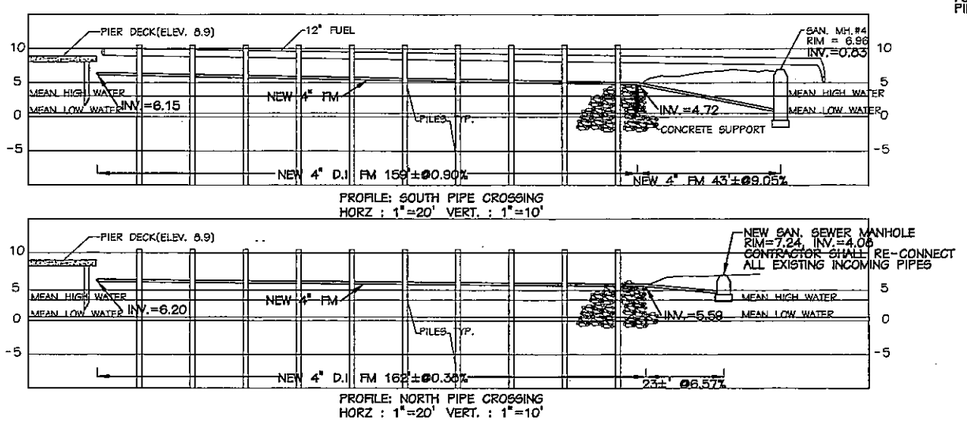

GRAPHIC SCALES

HOR: 1" = 20' 20 0 20 40 60 80

C-12

PHR&A

JOB ORDER NUMBER: 1204827
DESIGNED: DCJ/JST/DBP
DRAWN: E.F./JST/DBP
CHECKED: DCJ
F.B. COLE, JR., P.E.
BR. MGR.
DC JOHN M. SMITH, P.E.
R.H. IVES, JR., P.E.
ENGINEERING DIRECTOR
APPROVED: DATE:
SATISFACTORY TO ACTIVITY
APPROVED: DATE:
FOR C.O. FOR COMMANDER, NAVFAC

COMMONWEALTH OF VIRGINIA
DAVID C. JOHNSON
No. 025246
9-27-96
PROFESSIONAL ENGINEER

DEPARTMENT OF THE NAVY — NAVAL FACILITIES ENGINEERING COMMAND
NAVY PUBLIC WORKS CENTER
NAVAL STATION — NORFOLK, VIRGINIA
CRANEY ISLAND FUEL DEPOT — PORTSMOUTH, VIRGINIA

REPLACE SEWER LINES, PIERS "C" & "D"

PIER "D" NEW WORK – SHORESIDE

SIZE	CODE ID NO.	FWC DRAWING NO.	NAVFAC NO.
D	80091	15584L	4334116

CONSTR. CONTR. NO. N62470-96-B-5055
SCALE: GRAPHIC — SPEC. 05-96-5055 — SHEET 13 OF 20

PHR&A #9023-1-6

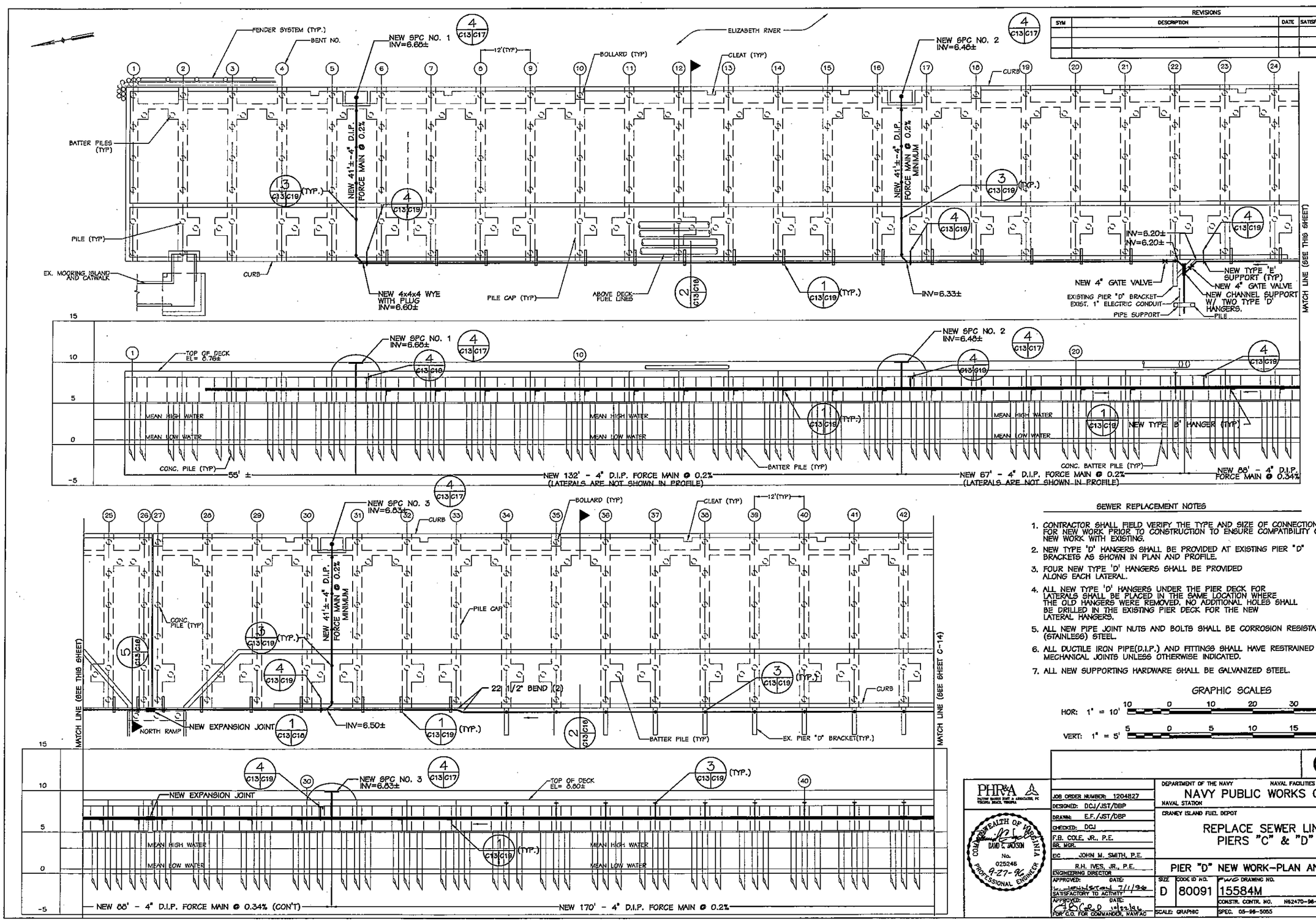

REVISIONS				
SYM	DESCRIPTION	DATE	SATISFACTORY	APPROVED BY

SEWER REPLACEMENT NOTES

1. CONTRACTOR SHALL FIELD VERIFY THE TYPE AND SIZE OF CONNECTIONS FOR NEW WORK PRIOR TO CONSTRUCTION TO ENSURE COMPATIBILITY OF NEW WORK WITH EXISTING.
2. NEW TYPE 'D' HANGERS SHALL BE PROVIDED AT EXISTING PIER "D" BRACKETS AS SHOWN IN PLAN AND PROFILE.
3. FOUR NEW TYPE 'D' HANGERS SHALL BE PROVIDED ALONG EACH LATERAL.
4. ALL NEW TYPE 'D' HANGERS UNDER THE PIER DECK FOR LATERALS SHALL BE PLACED IN THE SAME LOCATION WHERE THE OLD HANGERS WERE REMOVED. NO ADDITIONAL HOLES SHALL BE DRILLED IN THE EXISTING PIER DECK FOR THE NEW LATERAL HANGERS.
5. ALL NEW PIPE JOINT NUTS AND BOLTS SHALL BE CORROSION RESISTANT (STAINLESS) STEEL.
6. ALL DUCTILE IRON PIPE(D.I.P.) AND FITTINGS SHALL HAVE RESTRAINED MECHANICAL JOINTS UNLESS OTHERWISE INDICATED. (5 / C13 C17)
7. ALL NEW SUPPORTING HARDWARE SHALL BE GALVANIZED STEEL.

GRAPHIC SCALES

HOR: 1" = 10' (10 0 10 20 30 40)

VERT: 1" = 5' (5 0 5 10 15 20)

C-13

PHR&A

COMMONWEALTH OF VIRGINIA
DAVID C. JACKSON
No. 025246
9-27-96
PROFESSIONAL ENGINEER

JOB ORDER NUMBER: 1204827
DESIGNED: DCJ/JST/DBP
DRAWN: E.F./JST/DBP
CHECKED: DCJ
F.B. COLE, JR., P.E.
BR. MGR.
EIC JOHN M. SMITH, P.E.
R.H. IVES, JR., P.E.
ENGINEERING DIRECTOR
APPROVED: DATE:
SATISFACTORY TO ACTIVITY 7/1/96
APPROVED: DATE:
FOR C.O. FOR COMMANDER, NAVFAC

DEPARTMENT OF THE NAVY — NAVAL FACILITIES ENGINEERING COMMAND
NAVY PUBLIC WORKS CENTER
NAVAL STATION — NORFOLK, VIRGINIA
CRANEY ISLAND FUEL DEPOT — PORTSMOUTH, VIRGINIA

REPLACE SEWER LINES, PIERS "C" & "D"

PIER "D" NEW WORK-PLAN AND PROFILE

SIZE	CODE ID NO.	FWC DRAWING NO.	NAVFAC NO.
D	80091	15584M	4334117

CONSTR. CONTR. NO. N62470-96-B-5055
SCALE: GRAPHIC — SPEC. 05-96-5055 — SHEET 14 OF 20

PHR&A #9023-1-6

C:\JOBS\9023-1-6\C-13 Thu Sep 26 13:16:49 1996

REVISIONS				
SYM	DESCRIPTION	DATE	SATISFACTORY	APPROVED BY

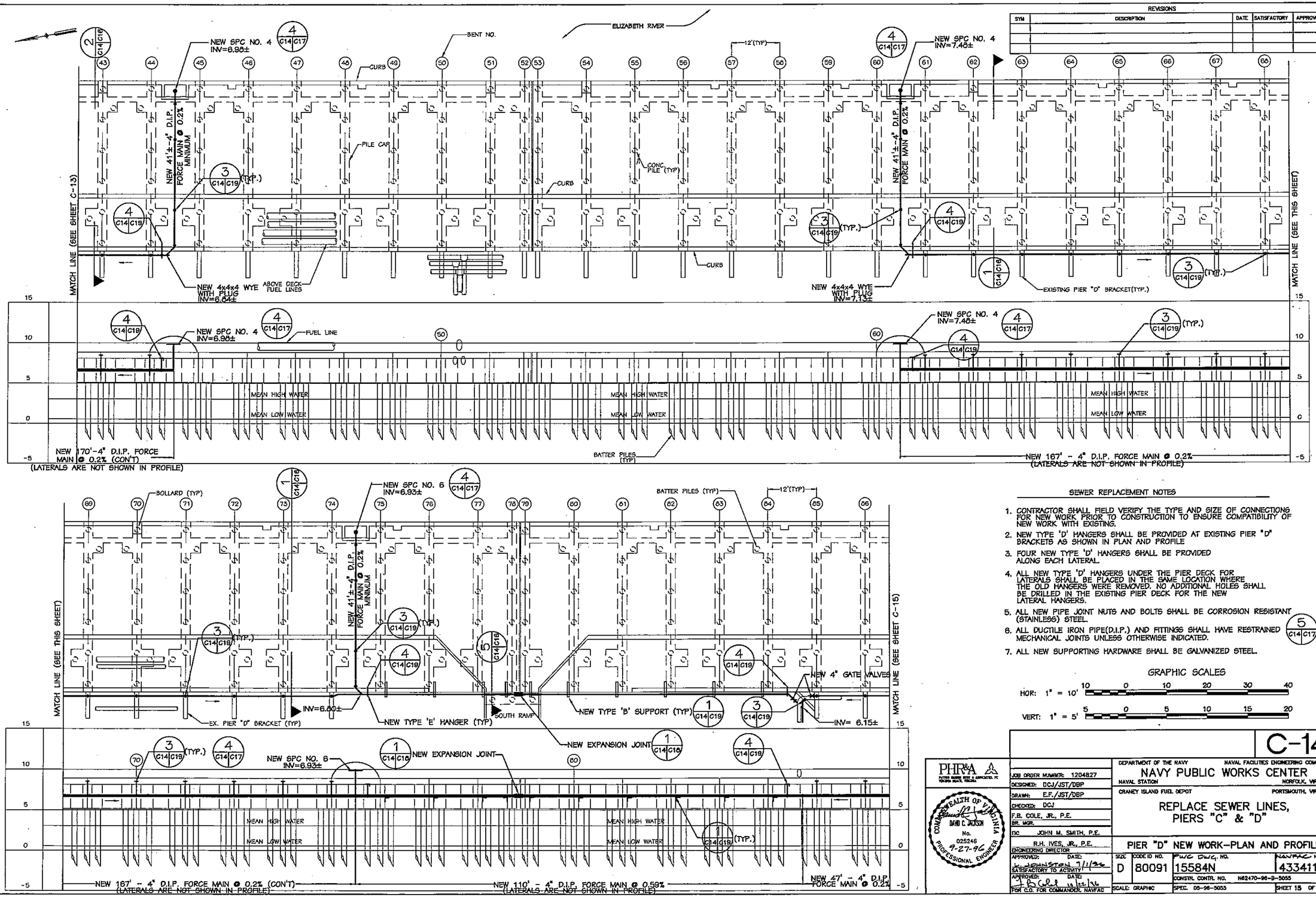

SEWER REPLACEMENT NOTES

1. CONTRACTOR SHALL FIELD VERIFY THE TYPE AND SIZE OF CONNECTIONS FOR NEW WORK PRIOR TO CONSTRUCTION TO ENSURE COMPATIBILITY OF NEW WORK WITH EXISTING.
2. NEW TYPE 'D' HANGERS SHALL BE PROVIDED AT EXISTING PIER "D" BRACKETS AS SHOWN IN PLAN AND PROFILE
3. FOUR NEW TYPE 'D' HANGERS SHALL BE PROVIDED ALONG EACH LATERAL.
4. ALL NEW TYPE 'D' HANGERS UNDER THE PIER DECK FOR LATERALS SHALL BE PLACED IN THE SAME LOCATION WHERE THE OLD HANGERS WERE REMOVED. NO ADDITIONAL HOLES SHALL BE DRILLED IN THE EXISTING PIER DECK FOR THE NEW LATERAL HANGERS.
5. ALL NEW PIPE JOINT NUTS AND BOLTS SHALL BE CORROSION RESISTANT (STAINLESS) STEEL.
6. ALL DUCTILE IRON PIPE(D.I.P.) AND FITTINGS SHALL HAVE RESTRAINED MECHANICAL JOINTS UNLESS OTHERWISE INDICATED. (5 / C14 C17)
7. ALL NEW SUPPORTING HARDWARE SHALL BE GALVANIZED STEEL.

GRAPHIC SCALES

HOR: 1" = 10' (10 0 10 20 30 40)

VERT: 1" = 5' (5 0 5 10 15 20)

C-14

PHR&A
PATTON HARRIS RUST & ASSOCIATES, PC
VIRGINIA BEACH, VIRGINIA

COMMONWEALTH OF VIRGINIA
DAVID C. JACKSON
No. 025246
9-27-96
PROFESSIONAL ENGINEER

JOB ORDER NUMBER:	1204827
DESIGNED:	DCJ/JST/DBP
DRAWN:	E.F./JST/DBP
CHECKED:	DCJ
F.B. COLE, JR., P.E. BR. MGR.	
EIC	JOHN M. SMITH, P.E.
R.H. IVES, JR., P.E. ENGINEERING DIRECTOR	
APPROVED: DATE:	L. JOHNSTON 7/1/96
SATISFACTORY TO ACTIVITY	
APPROVED: DATE:	10/22/96
FOR C.O. FOR COMMANDER, NAVFAC	

DEPARTMENT OF THE NAVY — NAVAL FACILITIES ENGINEERING COMMAND

NAVY PUBLIC WORKS CENTER

NAVAL STATION — NORFOLK, VIRGINIA

CRANEY ISLAND FUEL DEPOT — PORTSMOUTH, VIRGINIA

REPLACE SEWER LINES, PIERS "C" & "D"

PIER "D" NEW WORK—PLAN AND PROFILE

SIZE	CODE ID NO.	PWC DWG. NO.	NAVFAC NO.
D	80091	15584N	4334118

CONSTR. CONTR. NO. N62470-96-B-5055

SCALE: GRAPHIC — SPEC. 05-96-5055 — SHEET 15 OF 20

PHR&A #9023-1-6

REVISIONS				
SYM.	DESCRIPTION	DATE	SATISFACTORY	APPROVED BY

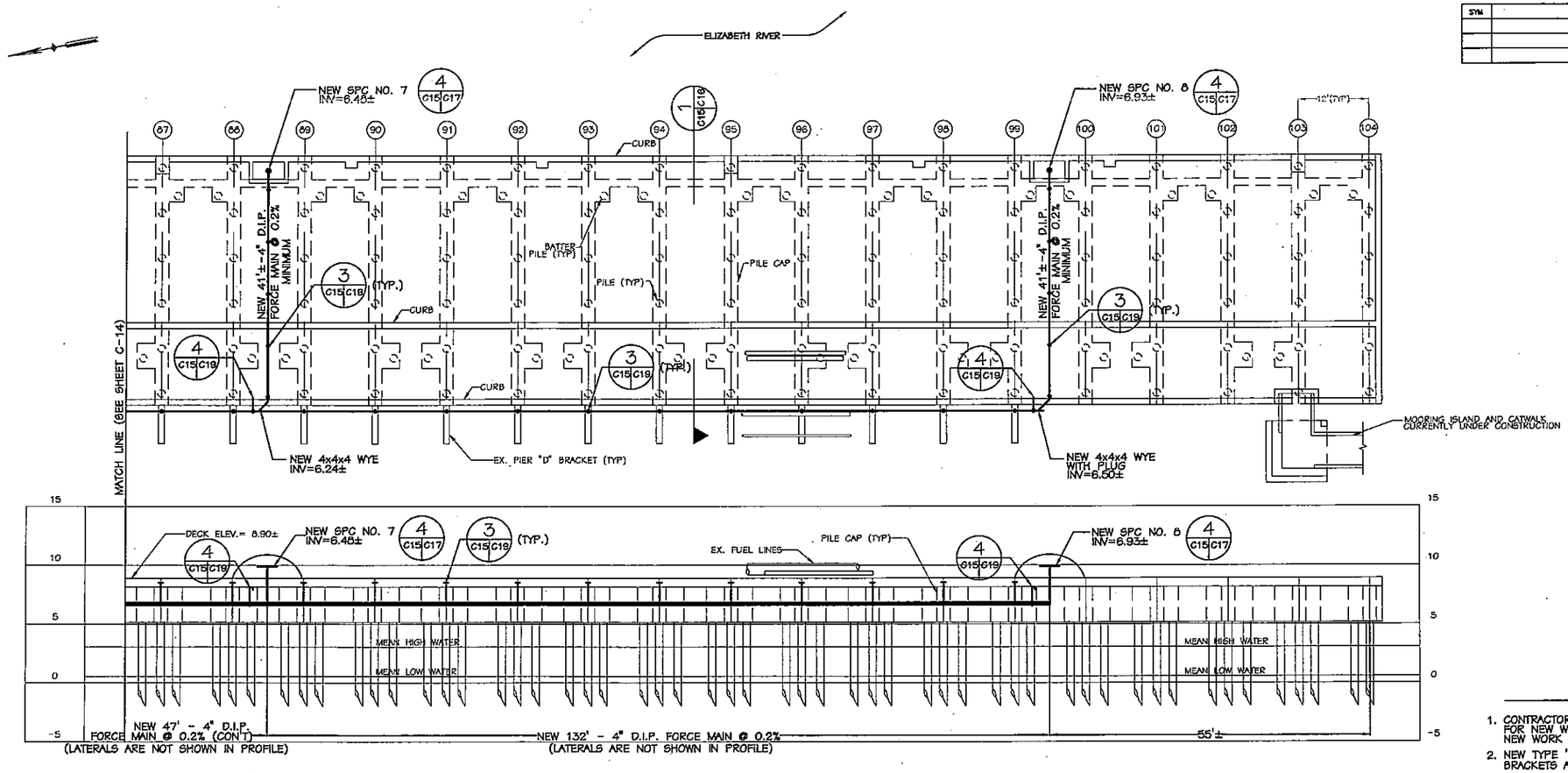

SEWER REPLACEMENT NOTES

1. CONTRACTOR SHALL FIELD VERIFY THE TYPE AND SIZE OF CONNECTIONS FOR NEW WORK PRIOR TO CONSTRUCTION TO ENSURE COMPATIBILITY OF NEW WORK WITH EXISTING.
2. NEW TYPE 'D' HANGERS SHALL BE PROVIDED AT EXISTING PIER "D" BRACKETS AS SHOWN IN PLAN AND PROFILE.
3. FOUR NEW TYPE 'D' HANGERS SHALL BE PROVIDED ALONG EACH LATERAL.
4. ALL NEW TYPE 'D' HANGERS UNDER THE PIER DECK FOR LATERALS SHALL BE PLACED IN THE SAME LOCATION WHERE THE OLD HANGERS WERE REMOVED. NO ADDITIONAL HOLES SHALL BE DRILLED IN THE EXISTING PIER DECK FOR THE NEW LATERAL HANGERS.
5. ALL NEW PIPE JOINT NUTS AND BOLTS SHALL BE CORROSION RESISTANT (STAINLESS) STEEL.
6. ALL DUCTILE IRON PIPE(D.I.P.) AND FITTINGS SHALL HAVE RESTRAINED MECHANICAL JOINTS UNLESS OTHERWISE NOTED.
7. ALL NEW SUPPORTING HARDWARE SHALL BE GALVANIZED STEEL.

5 C15/C17

GRAPHIC SCALES

HOR: 1" = 10' (10 0 10 20 30 40)

VERT: 1" = 5' (5 0 5 10 15 20)

C-15

PHR&A
PATTON HARRIS RIZZO & ASSOCIATES, PC
VIRGINIA BEACH, VIRGINIA

COMMONWEALTH OF VIRGINIA
DAVID C. JACKSON
No. 025246
9-27-96
PROFESSIONAL ENGINEER

JOB ORDER NUMBER: 1204827
DESIGNED: DCJ/JST/DBP
DRAWN: E.F./JST/DBP
CHECKED: DCJ
F.B. COLE, JR., P.E.
SR. MGR.
EIC JOHN M. SMITH, P.E.
R.H. IVES, JR., P.E.
ENGINEERING DIRECTOR
APPROVED: L. JOHNSTON DATE: 7/1/96
SATISFACTORY TO ACTIVITY
APPROVED: DATE: 10/22/96
FOR C.O. FOR COMMANDER, NAVFAC

DEPARTMENT OF THE NAVY — NAVAL FACILITIES ENGINEERING COMMAND
NAVY PUBLIC WORKS CENTER
NAVAL STATION — NORFOLK, VIRGINIA
CRANEY ISLAND FUEL DEPOT — PORTSMOUTH, VIRGINIA

REPLACE SEWER LINES, PIERS "C" & "D"

PIER "D" NEW WORK-PLAN AND PROFILE

SIZE	CODE ID NO.	FWC DRAWING NO.	NAVFAC NO.
D	80091	155840	4334119

CONSTR. CONTR. NO. N62470-96-B-5055
SCALE: GRAPHIC
SPEC. 05-96-3055
SHEET 18 OF 20

PHR&A #9023-1-6

C:\J0B5\9023-1-6\C-15 Wed Sep 25 10:07:29 1996

REVISIONS				
SYM	DESCRIPTION	DATE	SATISFACTORY	APPROVED BY

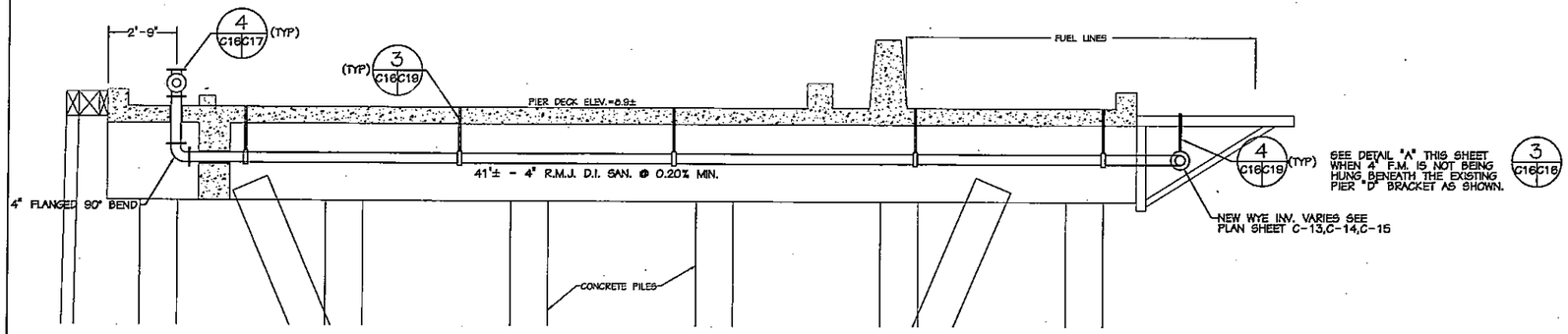

1 C14C16 C15 SOUTH SECTION PIER "D" (TYP.)
SCALE: 3/8" = 1'-0"

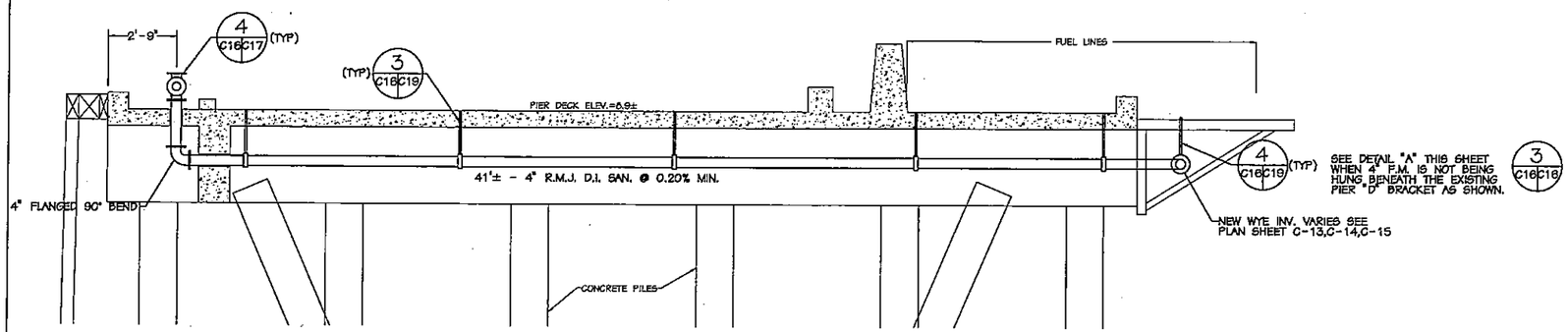

2 C13C16 C14 NORTH SECTION PIER "D" (TYP.)
SCALE: 3/8" = 1'-0"

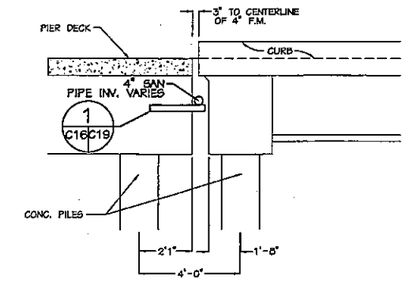

5 C13C16 C14 PIER "D" SECTION
SCALE: 3/8" = 1'-0"

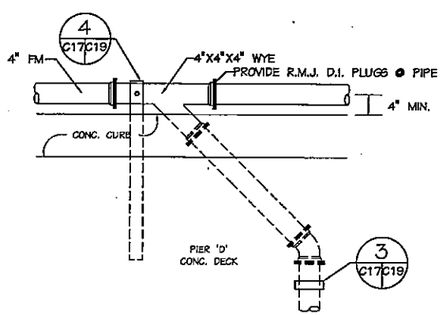

1. PROVIDE M.J. RETAINER GLANDS ON ALL FITTINGS.
2. ALL PIPE JOINT NUTS AND BOLTS SHALL BE STAINLESS STEEL.

3 C16C16 DETAIL "A"
SCALE: 3/4" = 1'-0"

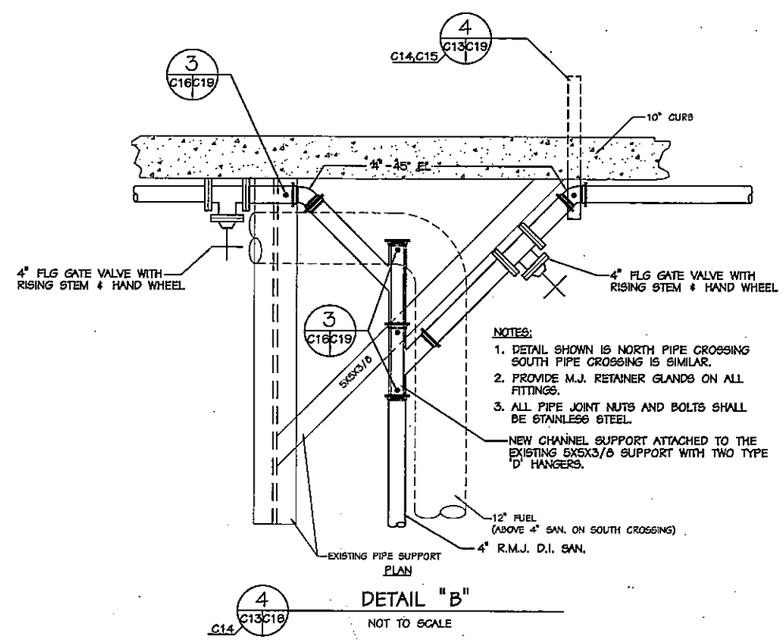

NOTES:
1. DETAIL SHOWN IS NORTH PIPE CROSSING SOUTH PIPE CROSSING IS SIMILAR.
2. PROVIDE M.J. RETAINER GLANDS ON ALL FITTINGS.
3. ALL PIPE JOINT NUTS AND BOLTS SHALL BE STAINLESS STEEL.

NEW CHANNEL SUPPORT ATTACHED TO THE EXISTING 5X5X3/8 SUPPORT WITH TWO TYPE 'D' HANGERS.

4 C13C16 C14 DETAIL "B"
NOT TO SCALE

C-16

PHR&A
PATTON HARRIS RUST & ASSOCIATES, PC
VIRGINIA BEACH, VIRGINIA

COMMONWEALTH OF VIRGINIA
DAVID C. JACKSON
No. 025246
4-27-96
PROFESSIONAL ENGINEER

JOB ORDER NUMBER: 1204827	DEPARTMENT OF THE NAVY — NAVAL FACILITIES ENGINEERING COMMAND
DESIGNED: DCJ/JST/DBP	NAVY PUBLIC WORKS CENTER
DRAWN: E.F./JST/DBP	NAVAL STATION — NORFOLK, VIRGINIA
CHECKED: DCJ	CRANEY ISLAND FUEL DEPOT — PORTSMOUTH, VIRGINIA
F.B. COLE, JR., P.E. BR. MGR.	REPLACE SEWER LINES, PIERS "C" & "D"
EIC JOHN M. SMITH, P.E.	
R.H. IVES, JR., P.E. ENGINEERING DIRECTOR	PIER "D" SECTIONS & DETAILS
APPROVED: L. JOHNSTON DATE: 7/1/96 SATISFACTORY TO ACTIVITY	SIZE D — CODE ID NO. 80091 — PWC DRAWING NO. 15584P — NAVFAC NO. 4334120
APPROVED: DATE: 11/28/96 FOR C.O. FOR COMMANDER, NAVFAC	CONSTR. CONTR. NO. N62470-96-B-5055
	SCALE: GRAPHIC — SPEC. 05-96-5055 — SHEET 17 OF 20

PHR&A #9023-1-6

C:\JOBS\9023-1-6\C-16 Wed Sep 25 11:53:13 1996

REVISIONS				
SYM	DESCRIPTION	DATE	SATISFACTORY	APPROVED BY

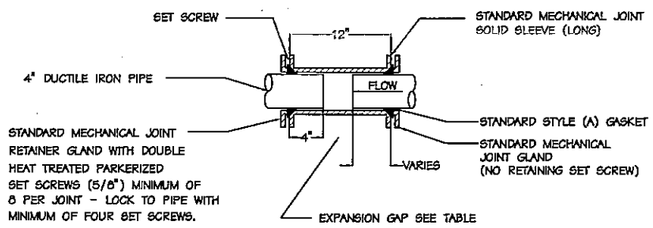

TABLE FOR EXPANSION

AMBIENT (MEAN) TEMPERATURE	EXPANSION GAP (INCHES)
40	3"
50	2 5/8"
60	2 3/8"
70	2 1/16"
80	1 3/4"
90	1 1/2"

1 / C9 C16 — TYPICAL EXPANSION JOINT

NOT TO SCALE

C10, C13,C14

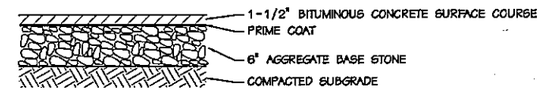

2 / C11 C16 — TYPICAL PAVEMENT SECTION

NOT TO SCALE

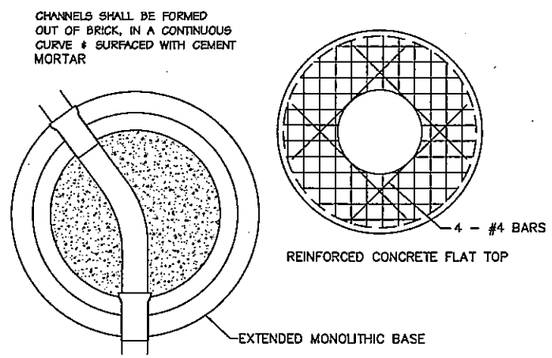

NOTES:

1. MANHOLE SHALL MEET ALL REQUIREMENTS OF ASTM C-478-72.
2. O-RING JOINT SHALL MEET ALL REQUIREMENTS OF ASTM C-361 AND C-443.
3. CONCRETE SHALL HAVE MIN. COMPRESSIVE STRENGTH OF 4,000 PSI.
4. REINFORCING FABRIC SHALL MEET ASTM A-185-72 .12 IN^2/FT.
5. BASES SHALL BE EXTENDED MONOLITHIC TYPE.
6. ALL MANHOLES SHALL RECEIVE INSIDE APPLICATION OF SIKAGARD HI-BILD OR APPROVED EQUAL, APPLIED ACCORDING TO MANUFACTURERS SPECS.
7. MAX. DEPTH FOR 48" MH WITH 5" WALL SHALL BE 12'. OVER 12' USE 60" MH WITH 6" WALL.
8. MH STEPS SHALL BE OLIVER "SURE STEP" OR APPROVED EQUAL AND SHALL BE CAST IN PLACE.
9. CONTRACTOR MUST USE STUBS OF APPROVED PIPE IN & OUT OF MH NOT TO EXTEND PAST MONOLITHIC BASE.
10. MORTARED AREAS OTHER THAN BENCH & INVERT TO BE COATED WITH SIKAGARD HI-BILD.

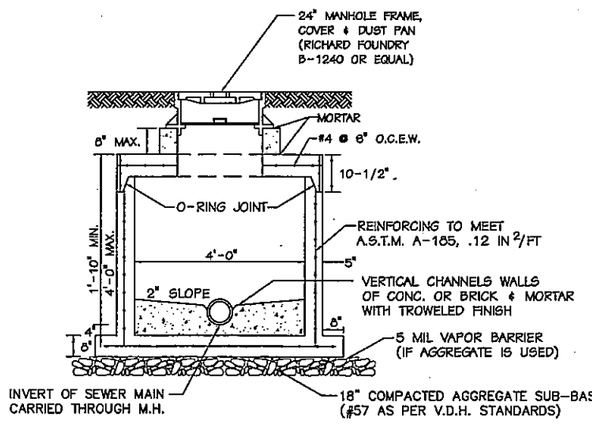

NOTE: CONTRACTOR SHALL RECONNECT ALL EXISTING INCOMING AND OUTGOING LINES TO THE NEW SHALLOW PRECAST SEWER MANHOLE AT THE NORTH PIER APPROACH.

3 / C12 C16 — SHALLOW PRECAST SEWER MANHOLE

NOT TO SCALE

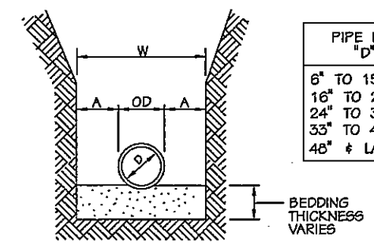

PIPE DIA. "D"	MAXIMUM "A"
6" TO 15"	8"
16" TO 21"	10"
24" TO 30"	12"
33" TO 42"	15"
48" & LARGER	18"

MAXIMUM TRENCH WIDTH "W" TAKEN AT TOP OF PIPE

NOTE: PROVIDE BEDDING IN ACCORDANCE WITH THE SPECIFICATIONS

STANDARD PIPE TRENCH WIDTH

NOT TO SCALE

C-18

PHR&A — PATTON HARRIS RUST & ASSOCIATES, PC VIRGINIA BEACH, VIRGINIA

COMMONWEALTH OF VIRGINIA — DAVID C. JACKSON — No. 025246 — 9-27-96 — PROFESSIONAL ENGINEER

JOB ORDER NUMBER: 1204827
DESIGNED: DCJ/JJST/DBP
DRAWN: E.F./JJST/DBP
CHECKED: DCJ
F.B. COLE, JR., P.E.
BR. MGR.
EC JOHN M. SMITH, P.E.
R.H. IVES, JR., P.E.
ENGINEERING DIRECTOR
APPROVED: DATE: 7/1/96
SATISFACTORY TO ACTIVITY
APPROVED: DATE: 10/22/96
FOR C.O. FOR COMMANDER, NAVFAC

DEPARTMENT OF THE NAVY — NAVAL FACILITIES ENGINEERING COMMAND
NAVY PUBLIC WORKS CENTER
NAVAL STATION — NORFOLK, VIRGINIA
CRANEY ISLAND FUEL DEPOT — PORTSMOUTH, VIRGINIA

REPLACE SEWER LINES, PIERS "C" & "D"

DETAILS

SIZE	CODE ID NO.	F.W.C. DRAWING NO.	NAVFAC NO.
D	80091	15584R	4334122

CONSTR. CONTR. NO. N62470-96-B-5055
SCALE: GRAPHIC — SPEC. 05-96-5055 — SHEET 19 OF 20

PHR&A #9023-1-6

C:\JOBS\9023-1-5\C-18 Wed Sep 25 12:12:11 1996

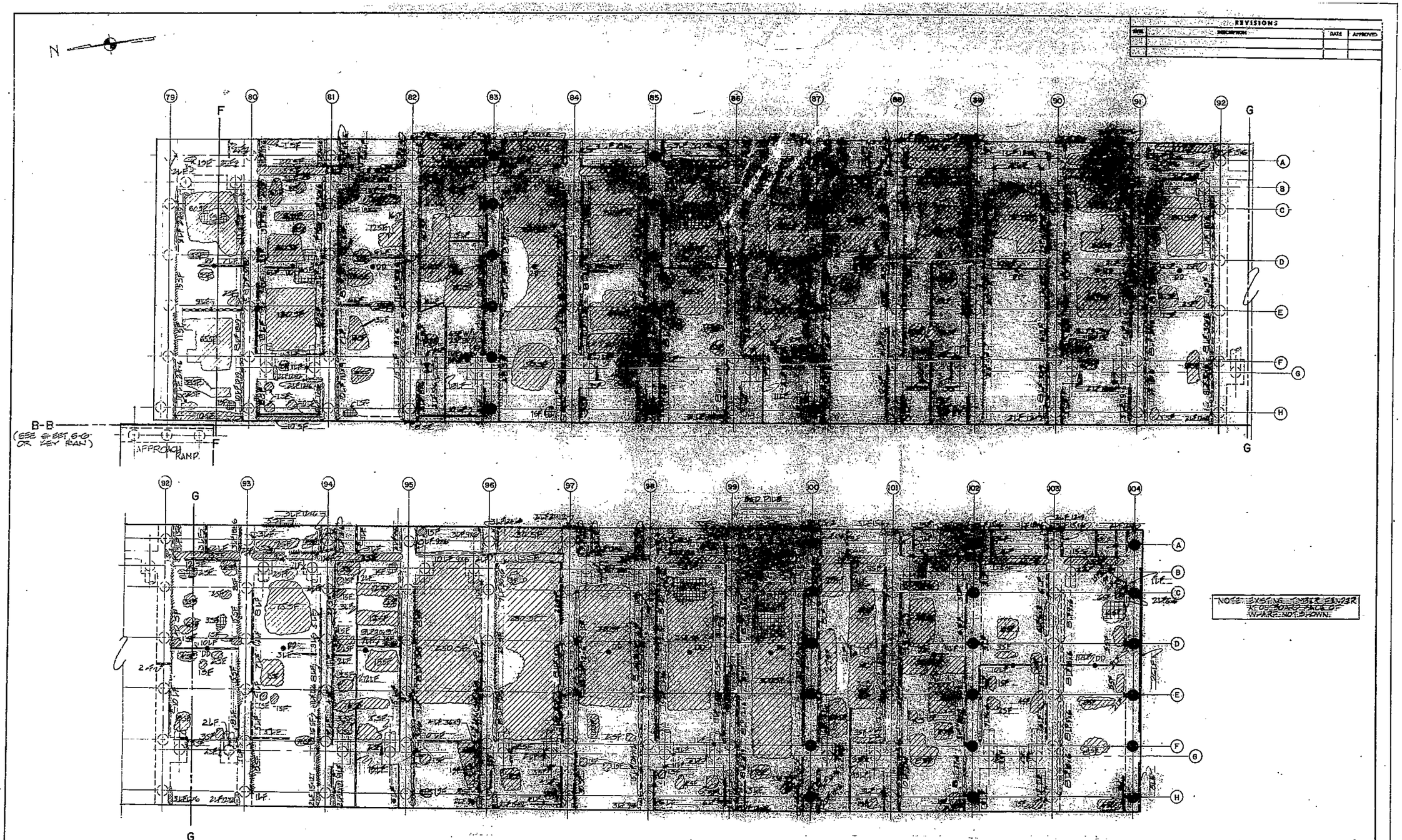

NOTE: EXISTING TIMBER FENDER AT OUTBOARD FACE OF WHARF NOT SHOWN.

NOTE: DIMENSIONS BETWEEN BENTS 79 THRU 104 EQUALS 12'-0".

L.F. = LINEAR FEET
S.F. = SQUARE FEET
IN. = INCHES
● PLASTIC BARRIER WRAP
●DD DECK DRAIN

REPAIR LEGEND (REFER TO SHEET S-7 FOR REPAIR DETAILS)

	L.F. - IN. x IN.	CORNER SPALL (HEIGHT x DEPTH)
	S.F.	SIDE SPALL
	L.F.	CRACK ON BOTTOM OF DECK OR BEAM
	L.F.	CRACK ON SIDE OF BEAM
X	L.F.	VERTICAL CRACK
	S.F.	SOFFIT SPALL (BOTTOM OF DECK OR BEAM)
	S.F.	DETERIORATED REINFORCING
		DETERIORATED PILE

GRAPHIC SCALE

3/16" = 1'-0"

5' 4' 3' 2' 1' 0 5' 10' 15'

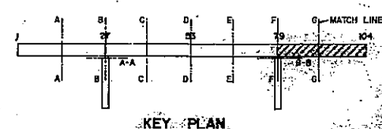

KEY PLAN

RECORD DRAWING LETTER DATED 08 AUG 1960	S-5
GLENN ROLLINS AND ASSOCIATES CONSULTING ENGINEERS NORFOLK VIRGINIA	DEPARTMENT OF THE NAVY NAVAL FACILITIES ENGINEERING COMMAND ATLANTIC DIVISION NAVAL STATION NORFOLK, VIRGINIA
DR. DAC / DR. TAR / CHK. DAC	NAVAL SUPPLY CENTER, CRANEY ISLAND PORTSMOUTH, VIRGINIA
	REPAIRS TO WHARF "D" PLAN - BENTS 79 TO 104 STRUCTURAL
APPROVED / DATE	SIZE F / CODE IDENT NO. 80091 / NAVFAC DRAWING NO. 4043118
OFFICER IN CHARGE / APPROVED / DATE	CONTR. CONF. NO. N62470-77-B-7618
FOR ED FOR COMMANDER NAVFAC	SCALE 3/16" = 1'-0" / SPEC. 05-77-7618 / SHEET 5 OF 8
	STD DWG. NO. 143118

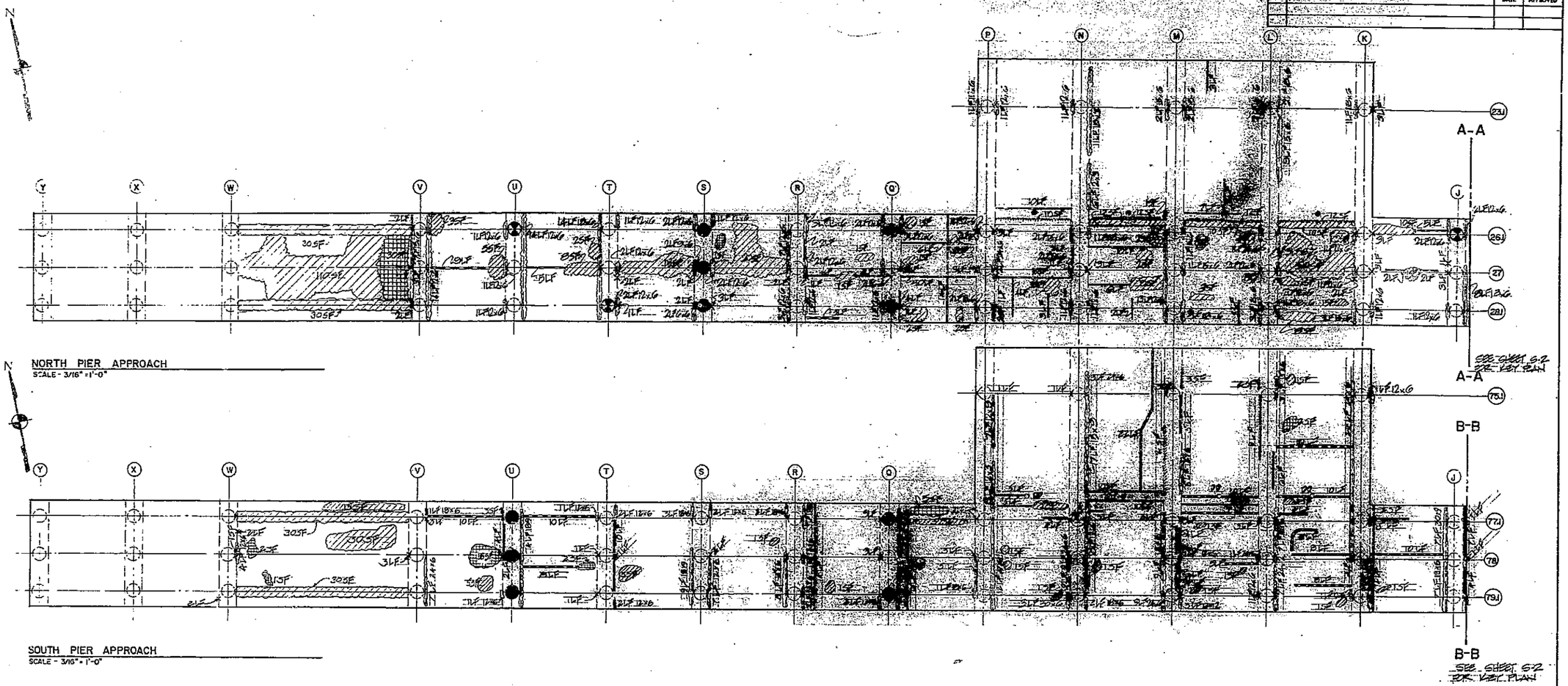

NORTH PIER APPROACH
SCALE - 3/16" = 1'-0"

SOUTH PIER APPROACH
SCALE - 3/16" = 1'-0"

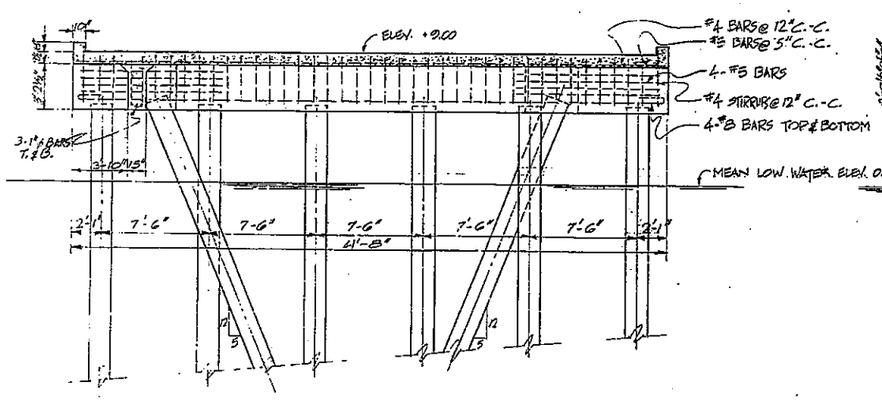

PIER SECTION
SCALE - 1/4" = 1'-0"

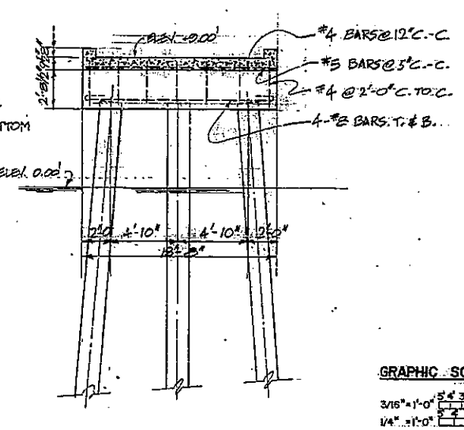

PIER APPROACH SECTION
SCALE - 1/4" = 1'-0"

NOTE: SECTIONS AND DETAILS HAVE BEEN DEVELOPED FROM PUBLIC WORKS DRAWING NUMBERS 4433 AND 4434.

REPAIR LEGEND (REFER TO SHEET S-7 FOR REPAIR DETAILS)

L.F.	=	LINEAR FEET
S.F.	=	SQUARE FEET
IN.	=	INCHES
L.F. - IN. x IN.		CORNER SPALL (HEIGHT x DEPTH)
S.F.		SIDE SPALL
L.F.		CRACK ON BOTTOM OF DECK OR BEAM
L.F.		CRACK ON SIDE OF BEAM
L.F.		VERTICAL CRACK
S.F.		SOFFIT SPALL (BOTTOM OF DECK OR BEAM)
S.F.		DETERIORATED REINFORCING
		DETERIORATED PILE
		PLASTIC BARRIER WRAP
DD		DECK DRAIN

NOTE: DIMENSIONS BETWEEN POINTS 1 TO 5 AND 5 TO 10 ... BETWEEN POINTS 1 AND 5 ... BETWEEN POINTS 5 AND 10 ...

GRAPHIC SCALES

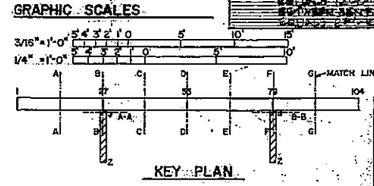

KEY PLAN

RECORD DRAWING LETTER DATED 06 AUG 1980

S-6

GLENN - ROLLINS AND ASSOCIATES CONSULTING ENGINEERS NORFOLK VIRGINIA

DEPARTMENT OF THE NAVY — NAVAL FACILITIES ENGINEERING COMMAND
ATLANTIC DIVISION
NAVAL STATION NORFOLK, VIRGINIA

NAVAL SUPPLY CENTER, CRANEY ISLAND PORTSMOUTH, VIRGINIA

REPAIRS TO WHARF "D"
ACCESS RAMP & SECTIONS
STRUCTURAL

SIZE	CODE IDENT NO.	NAVFAC DRAWING NO.
F	80091	4043119

CONTR. CONTR. NO. N62470-77-B-7618
SCALE 3/16" = 1'-0" SPEC. 05-77-7618 SHEET 6 OF 8
EFD DWG. NO. 143119

REVISIONS			
SYM.	DESCRIPTION	DATE	APPROVED

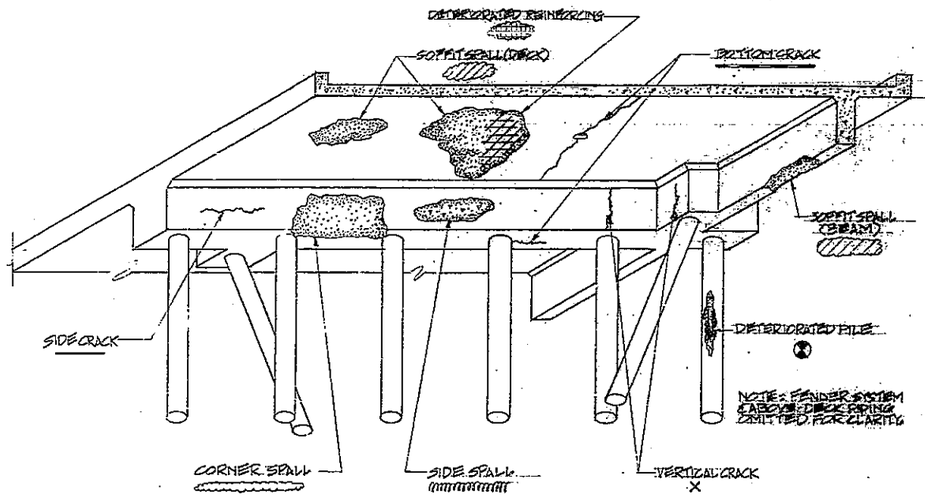

OBLIQUE VIEW SHOWING TYPICAL PIER DETAILS AND DETERIORATION

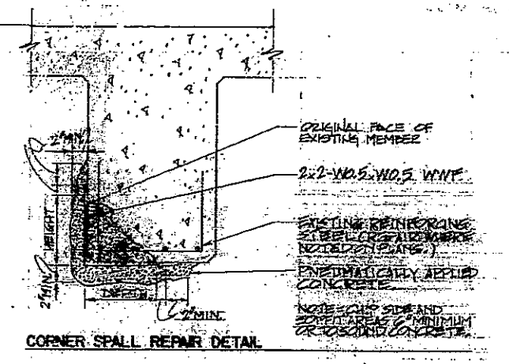

CORNER SPALL REPAIR DETAIL

CONCRETE REPAIR NOTES

1. REPAIR SPALL AND CRACKS IN CONCRETE WHERE SHOWN ON THE PIER PLANS, SHEETS S-1 THROUGH S-8. ESTIMATED QUANTITIES OF REPAIRS ARE SHOWN ON THE PIER PLANS IN SQUARE FEET OF AREA (SF) OR LINEAR FEET (LF). QUANTITIES SHOWN ARE THE ESTIMATED AMOUNT OF SURFACE TO BE CHIPPED AND CLEANED TO RECEIVE REPAIRS, MEASURED ALONG THE SURFACE OF THE ORIGINAL CONCRETE.
2. IN THE SPALLED AREAS TO BE REPAIRED, CHIP AWAY ALL LOOSE OR DETERIORATED CONCRETE TO A DEPTH OF 3/4-INCH OR TO SOUND CONCRETE, WHICHEVER IS GREATER.
3. CLEAN BY SANDBLASTING ALL AREAS TO BE CONCRETED, INCLUDING ALL EXPOSED REINFORCING. FOLLOW BY SCOURING WITH WATER AND COMPRESSED AIR JET.
4. REPAIR REINFORCING STEEL WHERE NOTED ON THE PIER PLANS IN ACCORDANCE WITH DETERIORATED REINFORCING STEEL REPAIR DETAIL.
5. INSTALL 2x2 W0.5 W0.5 WELDED WIRE FABRIC AS SHOWN. FASTEN WITH SUITABLE POWER DRIVEN STUDS OR HOOKED EXPANSION BOLTS AT 12" GRID EACH WAY.
6. WET DOWN ALL UNDERDECK SURFACES TO BE CONCRETED AND APPLY PNEUMATICALLY PLACED CONCRETE AS SHOWN.
7. AS SOON AS DRY PATCHES BEGIN TO APPEAR ON THE SURFACE OF THE PNEUMATICALLY PLACED CONCRETE, MOISTEN WITH A SPRAY OF WATER AND IMMEDIATELY SPRAY ON TWO COATS OF WHITE PIGMENTED MEMBRANE-FORMING CURING COMPOUND.
8. PLACES IN BEAMS AND PILE CAPS THAT ARE CRACKED SO SEVERELY THAT SPALLING IS IMMINENT HAVE BEEN INCLUDED IN THE QUANTITIES AS SPALLED AREAS. SUCH AREAS ARE TO BE CHIPPED DOWN ALONG THE CRACKED LINES AND REPAIRED AS SHOWN FOR SPALLED AREAS.
9. REPAIR THE INDICATED CRACKS BY THE PRESSURE INJECTION OF SUITABLE EPOXY COMPOUND. THE EPOXY SHALL TOTALLY FILL AND SEAL THE CRACK. SEE SPECIFICATIONS.

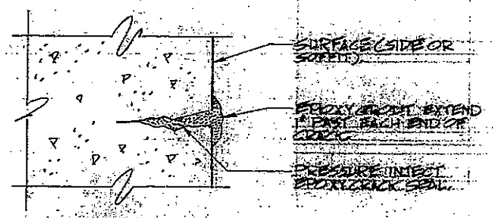

CRACK REPAIR DETAIL

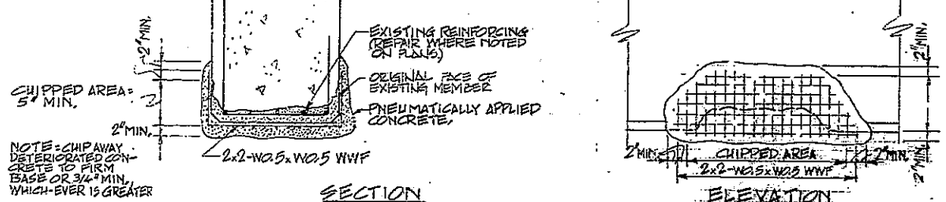

SOFFIT SPALL REPAIR DETAIL - PILE CAPS AND BEAM

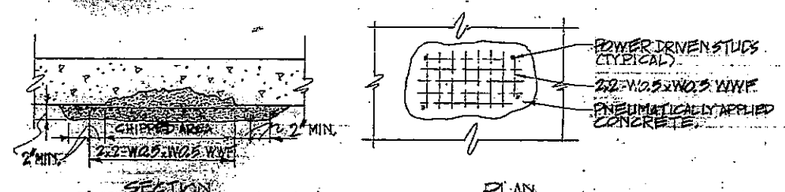

SOFFIT SPALL REPAIR DETAIL - SLABS

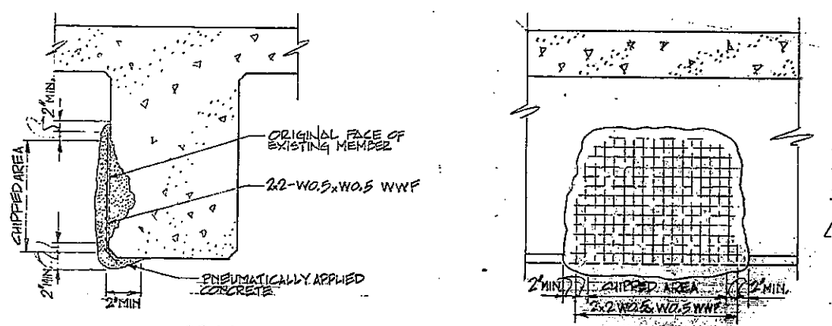

SIDE SPALL REPAIR DETAIL

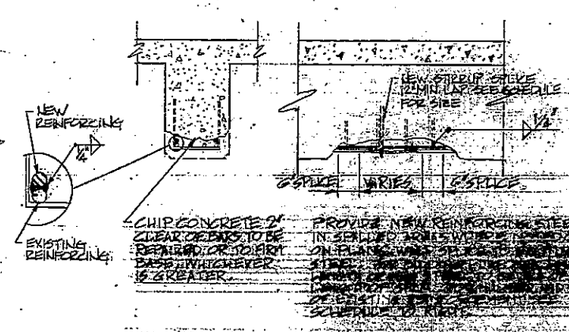

DETERIORATED REINFORCING STEEL REPAIR DETAIL

REINFORCING STEEL SCHEDULE

LOCATION	NUMBER	REINFORCEMENT
WHARF	[illegible]	[illegible] BARS TOP & BOTTOM W/ #4 STIRRUPS @ 1'-0" O.C.
WHARF	[illegible]	[illegible] BARS W/ #4 STIRRUPS @ 2'-0" O.C.
WHARF	[illegible]	[illegible] BARS W/ #4 STIRRUPS @ 1'-0" O.C.
WHARF	[illegible]	[illegible] 2'-0" LONGITUDINAL & [illegible] 12" TRANSVERSE
[illegible]	[illegible]	[illegible] STIRRUPS @ 2'-0" O.C.
[illegible]	[illegible]	[illegible] STIRRUPS @ 12"
[illegible]	[illegible]	[illegible] STIRRUPS @ 12" O.C.
[illegible]	[illegible]	[illegible]

RECORD DRAWING LETTER DATED [illegible] NOV. 1980

S-7

GLENN MULLINS AND ASSOCIATES CONSULTING ENGINEERS NORFOLK, VIRGINIA

DEPARTMENT OF THE NAVY — NAVAL FACILITIES ENGINEERING COMMAND
ATLANTIC DIVISION
NAVAL STATION NORFOLK, VIRGINIA
NAVAL SUPPLY CENTER, CHARLESTON ISLAND PORTSMOUTH, VIRGINIA

REPAIRS TO WHARF "D"
CONCRETE REPAIR DETAILS
STRUCTURAL

SIZE F	CODE IDENT NO. 80091	NAVFAC DRAWING NO. 4043120	
	CONTR. CONTR NO. N62470-77-B-7616		
SCALE: NONE	SPEC. 05-77-7616	SHEET 7 OF 8	

W.O. DWG. NO. 143120

REVISIONS			
NO.	DESCRIPTION	DATE	APPROVED

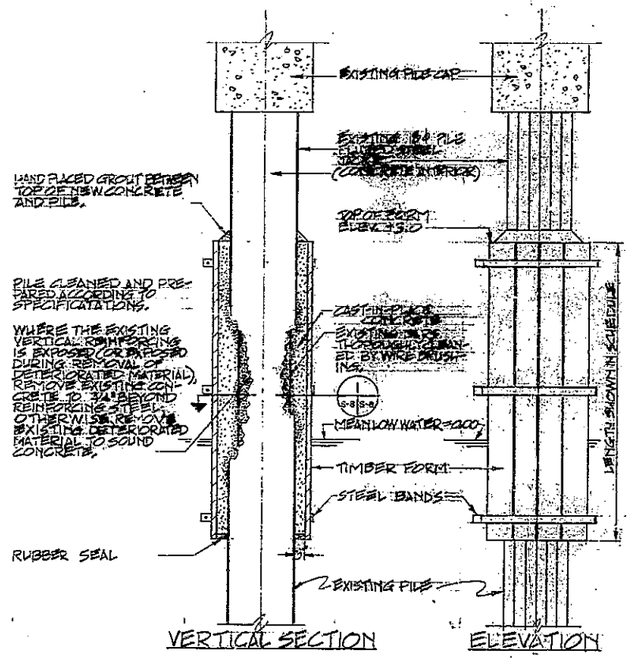

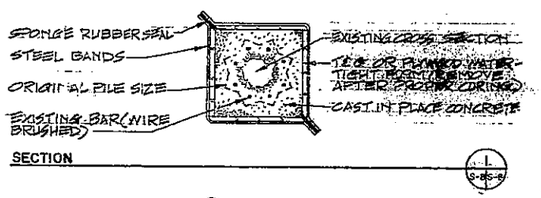

WOOD FORM DETAILS

SCALE: 3/4" = 1'-0"

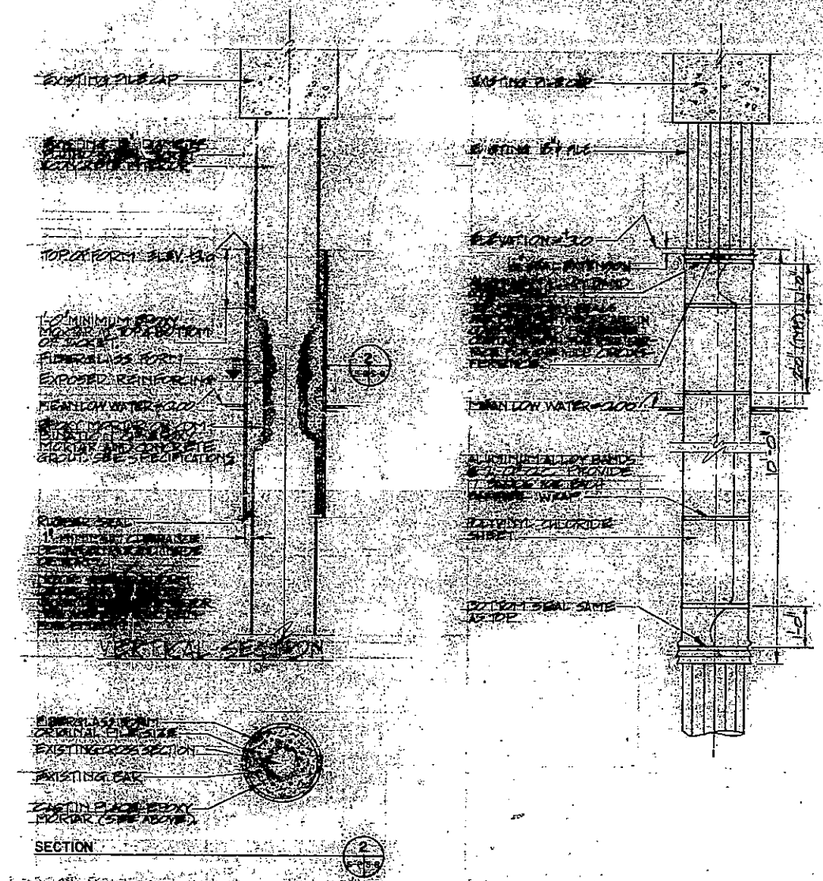

FIBERGLASS FORM DETAILS

SCALE: 3/4" = 1'-0"

PILE JACKET REPAIR SCHEDULE	
PILE	LENGTH
[illegible]	7'-0"
[illegible]	3'-0" *
[illegible]	6'-0"
[illegible]	6'-0"
[illegible]	3'-0"
[illegible]	18'-0"
[illegible]	5'-0"
[illegible]	9'-0"
[illegible]	9'-0"
[illegible]	12'-0"
[illegible]	7'-0"
[illegible]	8'-0"
[illegible]	7'-0"
[illegible]	8'-0"

* NOTE: TOP OF PILE 2' BELOW BOTTOM OF PILE CAP.

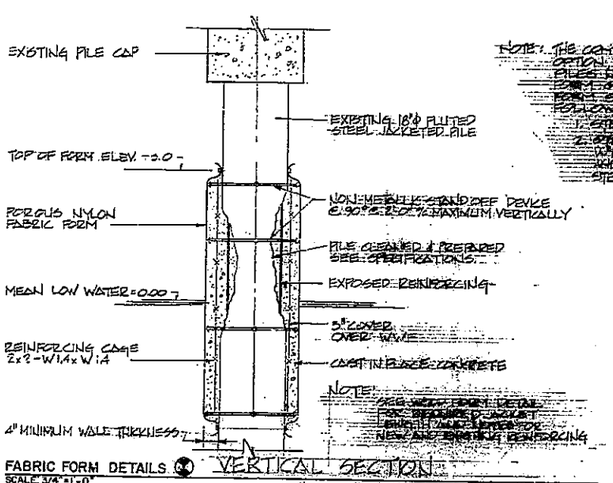

NOTE: THE CONTRACTOR MAY AT HIS OPTION, REPAIR THE INDICATED PILES BEFORE THE WOOD FORM PRIOR TO THE FIBERGLASS FORM FOR SHOWN OR ONE OF THE FOLLOWING METHODS:

1. STEEL JACKETED
2. [illegible] WHICH WILL [illegible] WITH [illegible] OF STEEL PILE.

NOTE: SEE WOOD FORM DETAIL FOR REPAIRS TO JACKET BUT THAT FORM FOR NEW AND EXISTING REINFORCING

FABRIC FORM DETAILS

SCALE: 3/4" = 1'-0"

FLEXIBLE PLASTIC BARRIER DETAILS

SCALE: 3/4" = 1'-0"

[illegible]

GRAPHIC SCALE

3/4" = 1'-0" 12" 9" 6" 3" 0 1' 2' 3' 4' 5'

RECORD DRAWING LETTER DATED [illegible]

S-8

[illegible] ROLLING AND ASSOCIATES CONSULTING ENGINEERS NORFOLK, VA. [illegible]

DEPARTMENT OF THE NAVY NAVAL FACILITIES ENGINEERING COMMAND ATLANTIC DIVISION NAVAL STATION NORFOLK, VIRGINIA

NAVAL SUPPLY CENTER, CRANEY ISLAND PORTSMOUTH, VIRGINIA

REPAIRS TO WHARF "D"

PILE JACKET & PROTECTIVE BARRIER DETAILS

STRUCTURAL

SIZE F | SUBMT DWG. NO. 80091 | HAVFAC DRAWING NO. 404321

CONTRACT NO. N62470-77-B-7696

SCALE NOTED | HAVFAC 05-77-7696 | SHEET 8 OF 8

SPD DWG. NO. 143121

FY09 MAINTENANCE DREDGING
CONDITION HYDROGRAPHIC SURVEYS

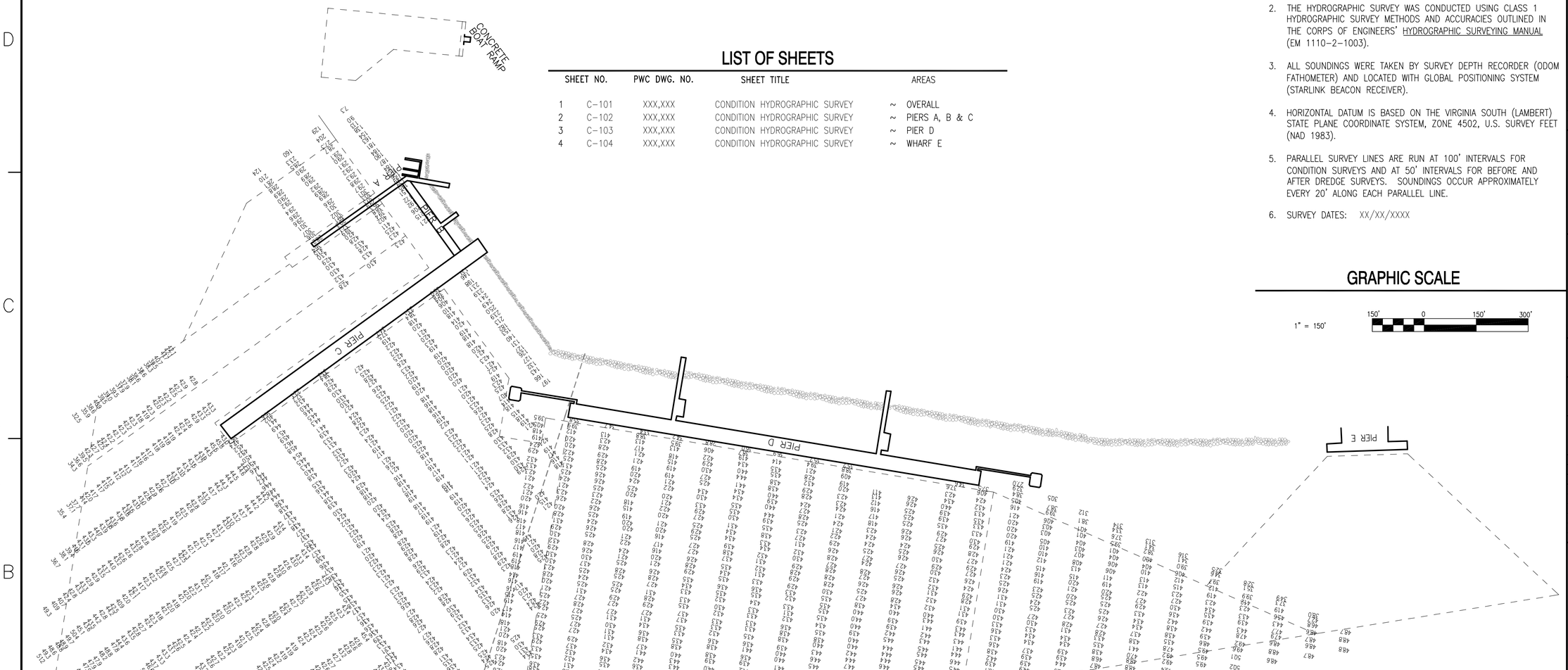

LIST OF SHEETS

SHEET NO.		PWC DWG. NO.	SHEET TITLE		AREAS
1	C-101	XXX,XXX	CONDITION HYDROGRAPHIC SURVEY	~	OVERALL
2	C-102	XXX,XXX	CONDITION HYDROGRAPHIC SURVEY	~	PIERS A, B & C
3	C-103	XXX,XXX	CONDITION HYDROGRAPHIC SURVEY	~	PIER D
4	C-104	XXX,XXX	CONDITION HYDROGRAPHIC SURVEY	~	WHARF E

HYDROGRAPHIC NOTES

1. SOUNDINGS ARE IN FEET AND TENTHS AND ARE REFERRED TO THE STATION LOW WATER DATUM, WHICH IS 2.13 FEET BELOW NATIONAL GEODETIC VERTICAL DATUM OF 1929 (1972 ADJUSTMENT).
2. THE HYDROGRAPHIC SURVEY WAS CONDUCTED USING CLASS 1 HYDROGRAPHIC SURVEY METHODS AND ACCURACIES OUTLINED IN THE CORPS OF ENGINEERS' HYDROGRAPHIC SURVEYING MANUAL (EM 1110-2-1003).
3. ALL SOUNDINGS WERE TAKEN BY SURVEY DEPTH RECORDER (ODOM FATHOMETER) AND LOCATED WITH GLOBAL POSITIONING SYSTEM (STARLINK BEACON RECEIVER).
4. HORIZONTAL DATUM IS BASED ON THE VIRGINIA SOUTH (LAMBERT) STATE PLANE COORDINATE SYSTEM, ZONE 4502, U.S. SURVEY FEET (NAD 1983).
5. PARALLEL SURVEY LINES ARE RUN AT 100' INTERVALS FOR CONDITION SURVEYS AND AT 50' INTERVALS FOR BEFORE AND AFTER DREDGE SURVEYS. SOUNDINGS OCCUR APPROXIMATELY EVERY 20' ALONG EACH PARALLEL LINE.
6. SURVEY DATES: XX/XX/XXXX

GRAPHIC SCALE

1" = 150'

150' 0 150' 300'

DIAGRAM OF DATUM PLANE

CRANEY ISLAND; PORTSMOUTH, VA VERTICAL CONTROL

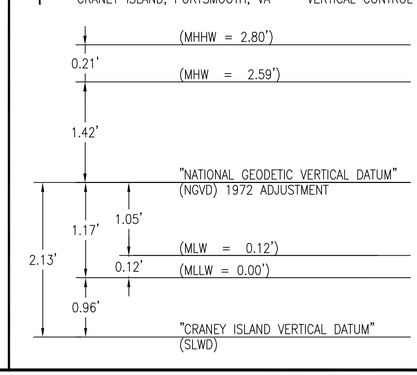

REV	DATE	DESCRIPTION	APPR

NAVFAC

PRELIMINARY NOT FOR CONSTRUCTION

SEAL

SUBMITTED BY
FIRM MEMBER DATE
APPROVED XXXXXXXXXX
ACTIVITY - SIMULATION TEAM DATE XX/XX/XX
APPROVED
FOR COMMANDER (NAVFAC)
DES TLB
CHK GRA QC
DR
RE
QC
MANAGER MULÉ, P.E.
SUPERVISOR N/A
BRANCH MANAGER MULÉ, P.E.
ENGINEERING DIR. FITCH, P.E.

NAVAL FACILITIES ENGINEERING COMMAND
NAVAL STATION - NORFOLK, VIRGINIA

DEPARTMENT OF THE NAVY
NAVAL FACILITIES ENGINEERING COMMAND ~ MID-ATLANTIC
CI CORE (HYDRO) ~ PWD NORFOLK

CRANEY ISLAND FUEL DEPOT
PORTSMOUTH, VIRGINIA
FY2009 MAINTENENCE DREDGING
CONDITION HYDROGRAPHIC SURVEY

CONDITION HYDROGRAPHIC SURVEY~ OVERALL

CODE ID. NO. 80091	SIZE D
SCALE:	AS NOTED
MAXIMO NO.	XXX
JOB ORDER NO.	XXXX,XXX
SPEC. NO.	
CONSTR. CONTR. NO.	XXXXXX
NAVFAC DRAWING NO.	12,000,101
SHEET	1 OF 4

C-101

DRAWFORM REVISION: 01 AUGUST 2004

REV/DATE FILE NAME: P:\Craney Island\Dredging\Fy-09 Condition\Phase B - Design\Drawings\CRANEY_Template.dwg LAYOUT NAME: ALL PLOTTED: Monday, May 12, 2008 - 1:00pm

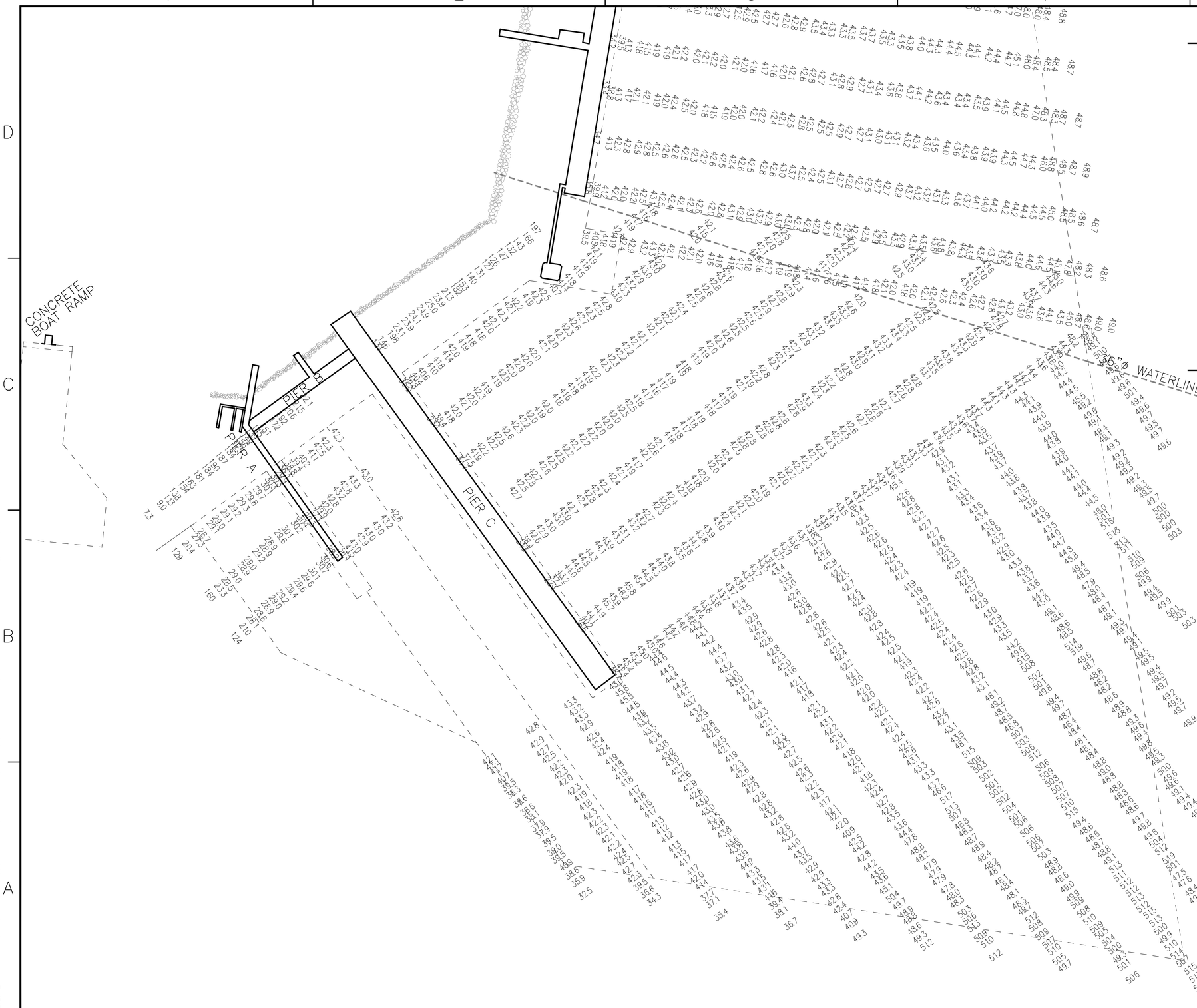

HYDROGRAPHIC NOTES

1. SOUNDINGS ARE IN FEET AND TENTHS AND ARE REFERRED TO THE STATION LOW WATER DATUM, WHICH IS 2.13 FEET BELOW NATIONAL GEODETIC VERTICAL DATUM OF 1929 (1972 ADJUSTMENT).
2. THE HYDROGRAPHIC SURVEY WAS CONDUCTED USING CLASS 1 HYDROGRAPHIC SURVEY METHODS AND ACCURACIES OUTLINED IN THE CORPS OF ENGINEERS' HYDROGRAPHIC SURVEYING MANUAL (EM 1110-2-1003).
3. ALL SOUNDINGS WERE TAKEN BY SURVEY DEPTH RECORDER (ODOM FATHOMETER) AND LOCATED WITH GLOBAL POSITIONING SYSTEM (STARLINK BEACON RECEIVER).
4. HORIZONTAL DATUM IS BASED ON THE VIRGINIA SOUTH (LAMBERT) STATE PLANE COORDINATE SYSTEM, ZONE 4502, U.S. SURVEY FEET (NAD 1983).
5. PARALLEL SURVEY LINES ARE RUN AT 100' INTERVALS FOR CONDITION SURVEYS AND AT 50' INTERVALS FOR BEFORE AND AFTER DREDGE SURVEYS. SOUNDINGS OCCUR APPROXIMATELY EVERY 20' ALONG EACH PARALLEL LINE.
6. SURVEY DATES: XX/XX/XXXX

GRAPHIC SCALE

1" = 100'

100' 0 100' 200'

DIAGRAM OF DATUM PLANE

CRANEY ISLAND; PORTSMOUTH, VA VERTICAL CONTROL

		(MHHW = 2.80')
0.21'		
		(MHW = 2.59')
1.42'		
		"NATIONAL GEODETIC VERTICAL DATUM" (NGVD) 1972 ADJUSTMENT
1.17'	1.05'	
		(MLW = 0.12')
2.13'	0.12'	
		(MLLW = 0.00')
0.96'		
		"CRANEY ISLAND VERTICAL DATUM" (SLWD)

REV	DATE	DESCRIPTION	APPR

NAVFAC

PRELIMINARY NOT FOR CONSTRUCTION

SEAL

SUBMITTED BY
FIRM MEMBER DATE
APPROVED XXXXXXXXXX
ACTIVITY - SATISFACTION DATE XX/XX/XX
APPROVED
FOR COMMENDER NAVFAC
DES. TLB
CHK. JKA QC
DR. BY
RV. BY
DR. BY
MANAGER MULÉ, P.E.
DEPUTY MANAGER N/A
BRANCH MANAGER MULÉ, P.E.
ENGINEERING DIR. FITCH, P.E.

DEPARTMENT OF THE NAVY
NAVAL FACILITIES ENGINEERING COMMAND ~ MID-ATLANTIC
CI CORE (HYDRO) ~ PWD NORFOLK
NAVAL FACILITIES ENGINEERING COMMAND
NAVAL STATION ~ NORFOLK, VIRGINIA
CRANEY ISLAND FUEL DEPOT
PORTSMOUTH, VIRGINIA
FY2009 MAINTENENCE DREDGING
CONDITION HYDROGRAPHIC SURVEY
CONDITION HYDROGRAPHIC SURVEY~ PIER C

CODE ID. NO. 80091 SIZE D
SCALE: AS NOTED
MAXIMO NO. XXX
JOB ORDER NO. XXXX,XXX
SPEC. NO.
CONSTR. CONTR. NO. XXXXXX
NAVFAC DRAWING NO. 12,000,102
SHEET 2 OF 4
C-102

DRAWFORM REVISION: 01 AUGUST 2004

REV/DATE FILE NAME: P:\Craney Island\Dredging\Fy-09 Condition\Phase B - Design\Drawings\CRANEY_Template.dwg LAYOUT NAME: Pier C PLOTTED: Monday, May 12, 2008 - 1:02pm

DIAGRAM OF DATUM PLANE

CRANEY ISLAND; PORTSMOUTH, VA VERTICAL CONTROL

	(MHHW = 2.80')
0.21'	
	(MHW = 2.59')
1.42'	
	"NATIONAL GEODETIC VERTICAL DATUM" (NGVD) 1972 ADJUSTMENT
1.05'	
1.17'	
	(MLW = 0.12')
0.12'	
2.13'	
	(MLLW = 0.00')
0.96'	
	"CRANEY ISLAND VERTICAL DATUM" (SLWD)

GRAPHIC SCALE

1" = 100'

100' 0 100' 200'

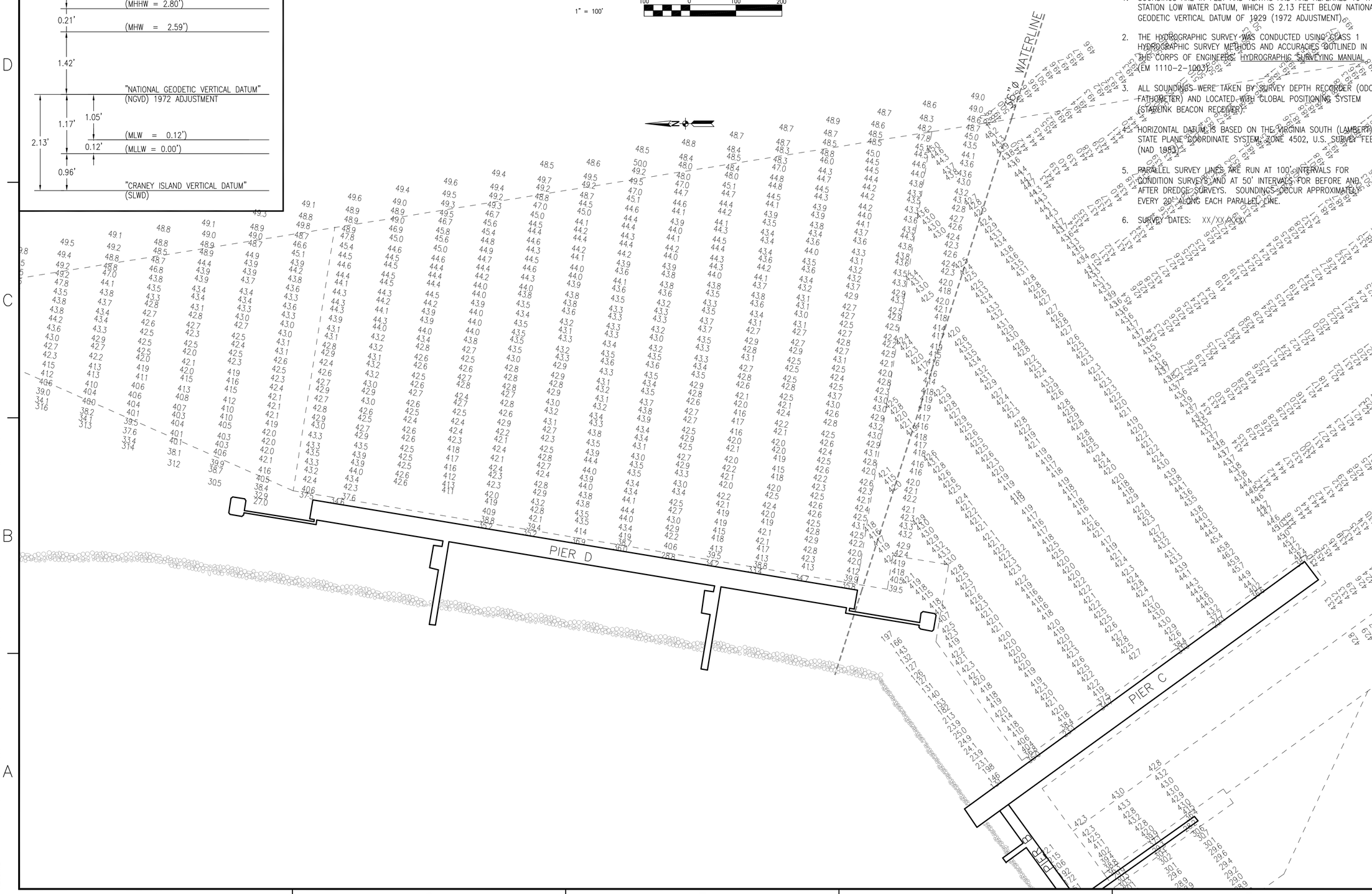

HYDROGRAPHIC NOTES

1. SOUNDINGS ARE IN FEET AND TENTHS AND ARE REFERRED TO THE STATION LOW WATER DATUM, WHICH IS 2.13 FEET BELOW NATIONAL GEODETIC VERTICAL DATUM OF 1929 (1972 ADJUSTMENT).
2. THE HYDROGRAPHIC SURVEY WAS CONDUCTED USING CLASS 1 HYDROGRAPHIC SURVEY METHODS AND ACCURACIES OUTLINED IN THE CORPS OF ENGINEERS, HYDROGRAPHIC SURVEYING MANUAL (EM 1110-2-1003).
3. ALL SOUNDINGS WERE TAKEN BY SURVEY DEPTH RECORDER (ODOM FATHOMETER) AND LOCATED WITH GLOBAL POSITIONING SYSTEM (STARLINK BEACON RECEIVER).
4. HORIZONTAL DATUM IS BASED ON THE VIRGINIA SOUTH (LAMBERT) STATE PLANE COORDINATE SYSTEM, ZONE 4502, U.S. SURVEY FEET (NAD 1983).
5. PARALLEL SURVEY LINES ARE RUN AT 100' INTERVALS FOR CONDITION SURVEYS AND AT 50' INTERVALS FOR BEFORE AND AFTER DREDGE SURVEYS. SOUNDINGS OCCUR APPROXIMATELY EVERY 20' ALONG EACH PARALLEL LINE.
6. SURVEY DATES: XX/XX/XXXX

DATE	APPR	DESCRIPTION	SYM

NAVFAC

PRELIMINARY NOT FOR CONSTRUCTION

SEAL

SUBMITTED BY

FIRM MEMBER DATE

APPROVED XX/XX/XXXX

ACTIVITY - SUPERVISOR DATE XX/XX/XX

APPROVED

FOR COMMAND NAVFAC

DES TLB DRAWER TLB

CHK JKA QC

DR

R BY

QC

MANAGER MULÉ, P.E.

ASST MGR N/A

BRANCH MULÉ, P.E.

ENGINEERING DIR. FITCH, P.E.

DEPARTMENT OF THE NAVY
NAVAL FACILITIES ENGINEERING COMMAND
CI CORE (HYDRO) ~ PWD NORFOLK

NAVAL FACILITIES ENGINEERING COMMAND ~ MID-ATLANTIC
NAVAL STATION ~ NORFOLK, VIRGINIA

CRANEY ISLAND FUEL DEPOT
PORTSMOUTH, VIRGINIA

FY2009 MAINTENENCE DREDGING CONDITION HYDROGRAPHIC SURVEY

CONDITION HYDROGRAPHIC SURVEY~ PIER D

CODE ID. NO. 80091	SIZE D
SCALE:	AS NOTED
MAXIMO NO.	XXXXXX
JOB ORDER NO.	XXXX,XXX
SPEC. NO.	
CONSTR. CONTR. NO.	XXXXXX
NAVFAC DRAWING NO.	12,000,103
SHEET	3 OF 4

C-103

DRAWFORM REVISION: 01 AUGUST 2004

REV DATE FILE NAME: P:\Craney Island\Dredging\Fy-09 Condition\Phase B - Design\Drawings\CRANEY_Template.dwg LAYOUT NAME: Pier D PLOTTED: Monday, May 12, 2008 - 1:03pm

FY2005 HYDROGRAPHIC SURVEY

CRANEY ISLAND FUEL DEPOT, PORTSMOUTH, VA

PIERS A, C, D, & E

LIST OF SHEETS

SHEET NO.		NAVFAC #	SHEET TITLE	AREAS
1	V-101	4,553,738	CONDITION HYDROGRAPHIC SURVEY	~ OVERALL
2	V-102	4,553,739	CONDITION HYDROGRAPHIC SURVEY	~ PIERS A & C
3	V-103	4,553,740	CONDITION HYDROGRAPHIC SURVEY	~ PIER D
4	V-104	4,553,741	CONDITION HYDROGRAPHIC SURVEY	~ PIER E

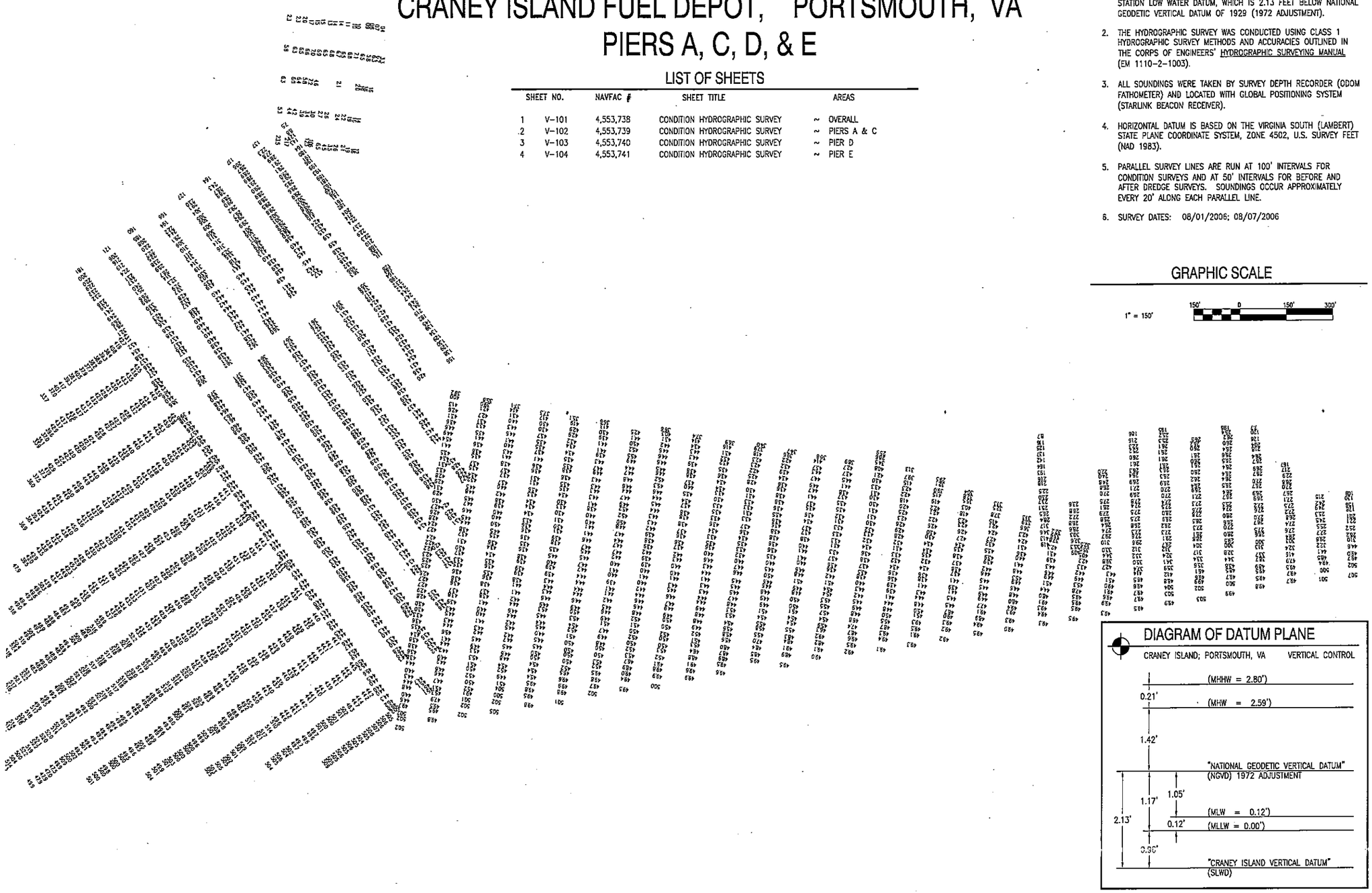

HYDROGRAPHIC NOTES

1. SOUNDINGS ARE IN FEET AND TENTHS AND ARE REFERRED TO THE STATION LOW WATER DATUM, WHICH IS 2.13 FEET BELOW NATIONAL GEODETIC VERTICAL DATUM OF 1929 (1972 ADJUSTMENT).
2. THE HYDROGRAPHIC SURVEY WAS CONDUCTED USING CLASS 1 HYDROGRAPHIC SURVEY METHODS AND ACCURACIES OUTLINED IN THE CORPS OF ENGINEERS' HYDROGRAPHIC SURVEYING MANUAL (EM 1110-2-1003).
3. ALL SOUNDINGS WERE TAKEN BY SURVEY DEPTH RECORDER (ODOM FATHOMETER) AND LOCATED WITH GLOBAL POSITIONING SYSTEM (STARLINK BEACON RECEIVER).
4. HORIZONTAL DATUM IS BASED ON THE VIRGINIA SOUTH (LAMBERT) STATE PLANE COORDINATE SYSTEM, ZONE 4502, U.S. SURVEY FEET (NAD 1983).
5. PARALLEL SURVEY LINES ARE RUN AT 100' INTERVALS FOR CONDITION SURVEYS AND AT 50' INTERVALS FOR BEFORE AND AFTER DREDGE SURVEYS. SOUNDINGS OCCUR APPROXIMATELY EVERY 20' ALONG EACH PARALLEL LINE.
6. SURVEY DATES: 08/01/2006; 08/07/2006

GRAPHIC SCALE

1" = 150' 150' 0 150' 300'

RDC TLB
PES

GALLAHER, P.E.

CONDITION HYDROGRAPHIC SURVEY~ OVERALL

AS NOTED
AK9BBG

4,553,738
1
V-101

Xref P:\Craney Island\Dredging\AK9BBG FY05 Condition Survey\Phase B - Design\Drawings\CRANEY-G-BS.dwg

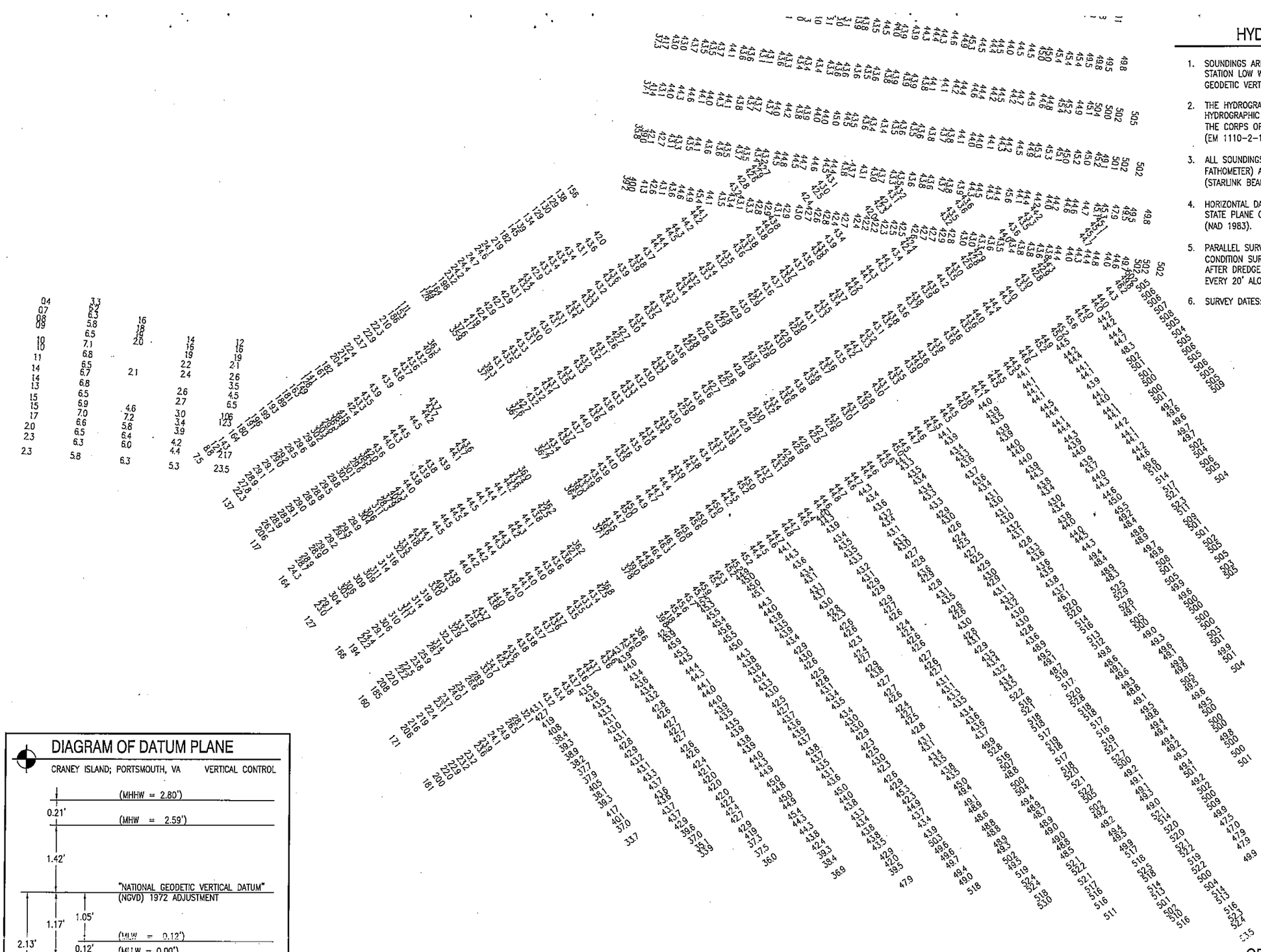

HYDROGRAPHIC NOTES

1. SOUNDINGS ARE IN FEET AND TENTHS AND ARE REFERRED TO THE STATION LOW WATER DATUM, WHICH IS 2.13 FEET BELOW NATIONAL GEODETIC VERTICAL DATUM OF 1929 (1972 ADJUSTMENT).
2. THE HYDROGRAPHIC SURVEY WAS CONDUCTED USING CLASS 1 HYDROGRAPHIC SURVEY METHODS AND ACCURACIES OUTLINED IN THE CORPS OF ENGINEERS' HYDROGRAPHIC SURVEYING MANUAL (EM 1110-2-1003).
3. ALL SOUNDINGS WERE TAKEN BY SURVEY DEPTH RECORDER (ODOM FATHOMETER) AND LOCATED WITH GLOBAL POSITIONING SYSTEM (STARLINK BEACON RECEIVER).
4. HORIZONTAL DATUM IS BASED ON THE VIRGINIA SOUTH (LAMBERT) STATE PLANE COORDINATE SYSTEM, ZONE 4502, U.S. SURVEY FEET (NAD 1983).
5. PARALLEL SURVEY LINES ARE RUN AT 100' INTERVALS FOR CONDITION SURVEYS AND AT 50' INTERVALS FOR BEFORE AND AFTER DREDGE SURVEYS. SOUNDINGS OCCUR APPROXIMATELY EVERY 20' ALONG EACH PARALLEL LINE.
6. SURVEY DATES: 08/01/2006; 08/07/2006

DIAGRAM OF DATUM PLANE

CRANEY ISLAND; PORTSMOUTH, VA — VERTICAL CONTROL

		(MHHW = 2.80')
0.21'		(MHW = 2.59')
1.42'		
		"NATIONAL GEODETIC VERTICAL DATUM" (NGVD) 1972 ADJUSTMENT
1.17'	1.05'	
		(MLW = 0.12')
2.13'	0.12'	(MLLW = 0.00')
0.96'		
		"CRANEY ISLAND VERTICAL DATUM" (SLWD)

GRAPHIC SCALE

1" = 100'

100' 0 100' 200'

RDC TLB
PES

GALLAHER, P.E.

CONDITION HYDROGRAPHIC SURVEY~ PIER A & C

AS NOTED
AK9BBG

4,553,739
2
V-102

Xref P:\Craney Island\Dredging\AK9BBG FY05 Condition Survey\Phase B – Design\Drawings\CRANEY-G-BS.dwg

DIAGRAM OF DATUM PLANE

CRANEY ISLAND; PORTSMOUTH, VA — VERTICAL CONTROL

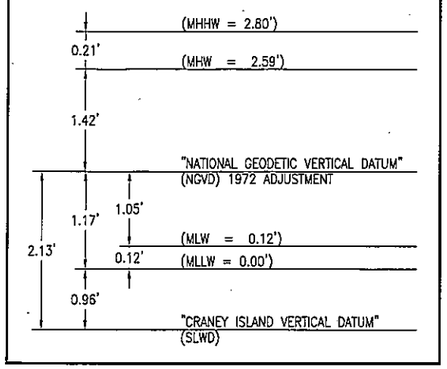

GRAPHIC SCALE

1" = 100'

100' 0 100' 200'

HYDROGRAPHIC NOTES

1. SOUNDINGS ARE IN FEET AND TENTHS AND ARE REFERRED TO THE STATION LOW WATER DATUM, WHICH IS 2.13 FEET BELOW NATIONAL GEODETIC VERTICAL DATUM OF 1929 (1972 ADJUSTMENT).
2. THE HYDROGRAPHIC SURVEY WAS CONDUCTED USING CLASS 1 HYDROGRAPHIC SURVEY METHODS AND ACCURACIES OUTLINED IN THE CORPS OF ENGINEERS' HYDROGRAPHIC SURVEYING MANUAL (EM 1110-2-1003).
3. ALL SOUNDINGS WERE TAKEN BY SURVEY DEPTH RECORDER (ODOM FATHOMETER) AND LOCATED WITH GLOBAL POSITIONING SYSTEM (STARLINK BEACON RECEIVER).
4. HORIZONTAL DATUM IS BASED ON THE VIRGINIA SOUTH (LAMBERT) STATE PLANE COORDINATE SYSTEM, ZONE 4502, U.S. SURVEY FEET (NAD 1983).
5. PARALLEL SURVEY LINES ARE RUN AT 100' INTERVALS FOR CONDITION SURVEYS AND AT 50' INTERVALS FOR BEFORE AND AFTER DREDGE SURVEYS. SOUNDINGS OCCUR APPROXIMATELY EVERY 20' ALONG EACH PARALLEL LINE.
6. SURVEY DATES: 08/01/2006; 08/07/2006

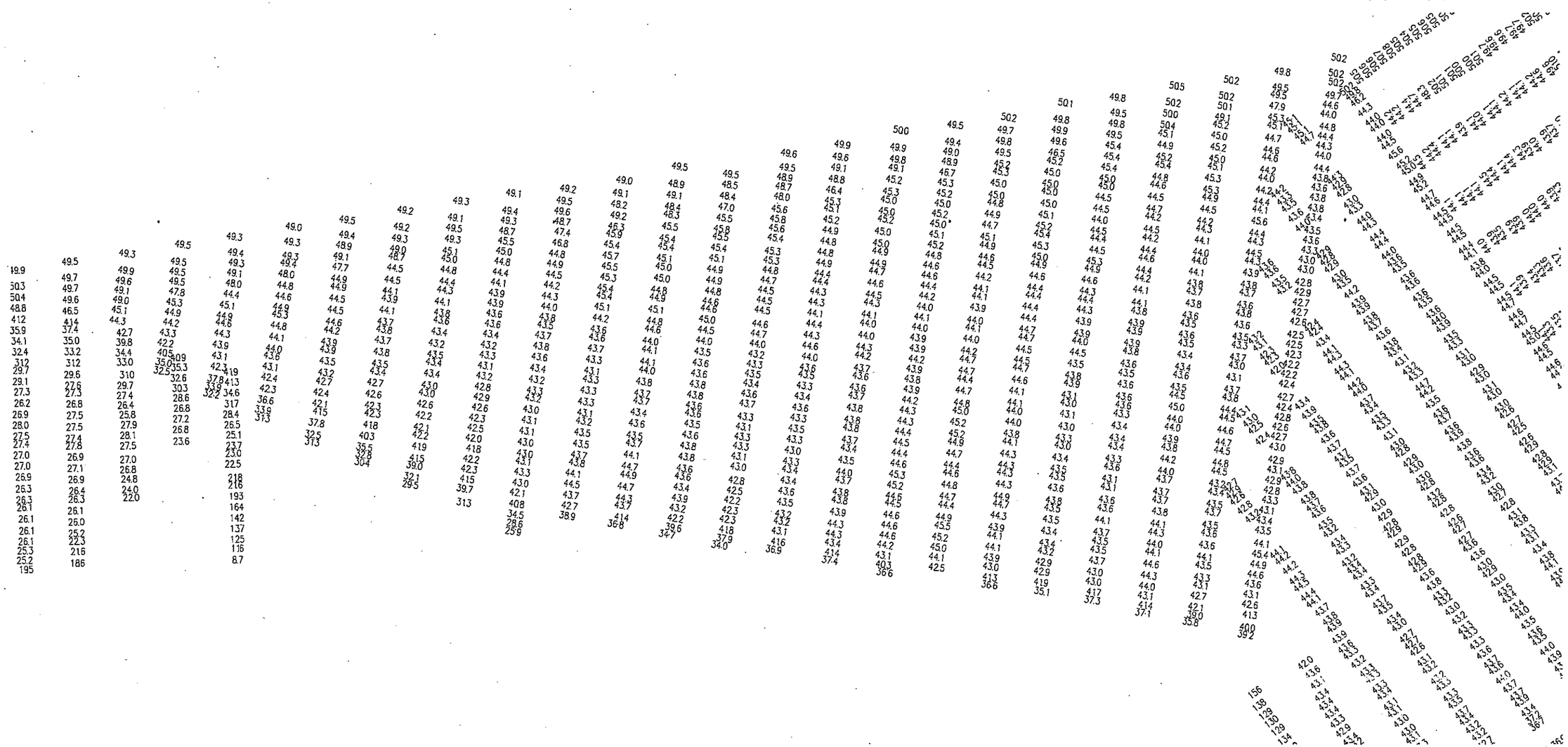

RDC
PES

TLB

GALAHER, P.E.

CONDITION HYDROGRAPHIC SURVEY~ PIER D

AS NOTED
AK9BBG

4,553,740
3

V-103

Xref P:\Craney Island\Dredging\AK9BBG FY05 Condition Survey\Phase B - Design\Drawings\CRANEY-G-BS.dwg

DIAGRAM OF DATUM PLANE

CRANEY ISLAND; PORTSMOUTH, VA — VERTICAL CONTROL

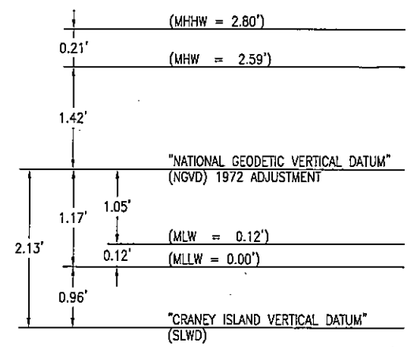

GRAPHIC SCALE

1" = 50'

50' 0 50' 100'

HYDROGRAPHIC NOTES

1. SOUNDINGS ARE IN FEET AND TENTHS AND ARE REFERRED TO THE STATION LOW WATER DATUM, WHICH IS 2.13 FEET BELOW NATIONAL GEODETIC VERTICAL DATUM OF 1929 (1972 ADJUSTMENT).
2. THE HYDROGRAPHIC SURVEY WAS CONDUCTED USING CLASS 1 HYDROGRAPHIC SURVEY METHODS AND ACCURACIES OUTLINED IN THE CORPS OF ENGINEERS' HYDROGRAPHIC SURVEYING MANUAL (EM 1110-2-1003).
3. ALL SOUNDINGS WERE TAKEN BY SURVEY DEPTH RECORDER (ODOM FATHOMETER) AND LOCATED WITH GLOBAL POSITIONING SYSTEM (STARLINK BEACON RECEIVER).
4. HORIZONTAL DATUM IS BASED ON THE VIRGINIA SOUTH (LAMBERT) STATE PLANE COORDINATE SYSTEM, ZONE 4502, U.S. SURVEY FEET (NAD 1983).
5. PARALLEL SURVEY LINES ARE RUN AT 100' INTERVALS FOR CONDITION SURVEYS AND AT 50' INTERVALS FOR BEFORE AND AFTER DREDGE SURVEYS. SOUNDINGS OCCUR APPROXIMATELY EVERY 20' ALONG EACH PARALLEL LINE.
6. SURVEY DATES: 08/01/2006; 08/07/2006

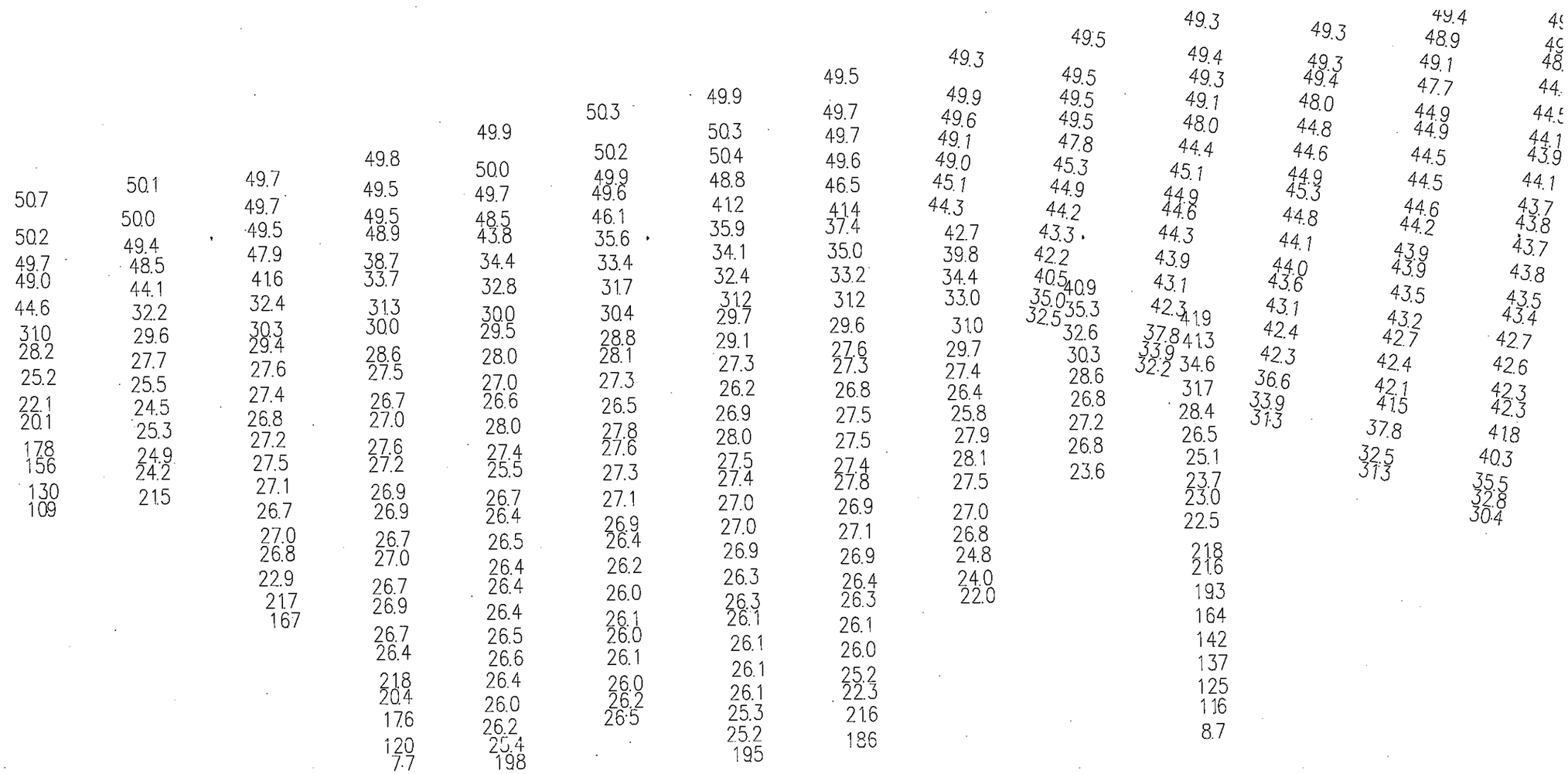

RDC
PES

TLB

GALLAHER, P.E.

CONDITION HYDROGRAPHIC SURVEY~PIER E

AS NOTED
AK9BBG

4,553,741
4

V-104

Xref P:\Craney Island\Dredging\AK9BBG FY05 Condition Survey\Phase B – Design\Drawings\CRANEY-G-BS.dwg

REPAIR TO MOORING SYSTEM, PIER "D"

DFSP, CRANEY ISLAND

PORTSMOUTH, VIRGINIA

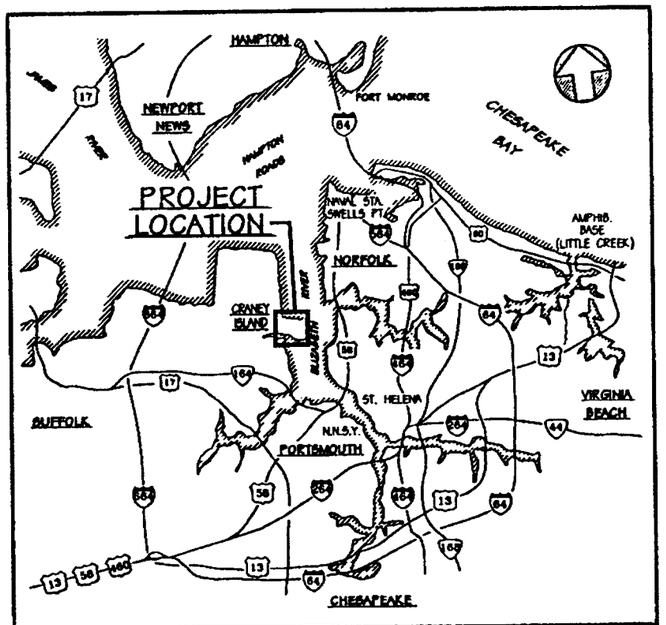

VICINITY MAP
NOT TO SCALE

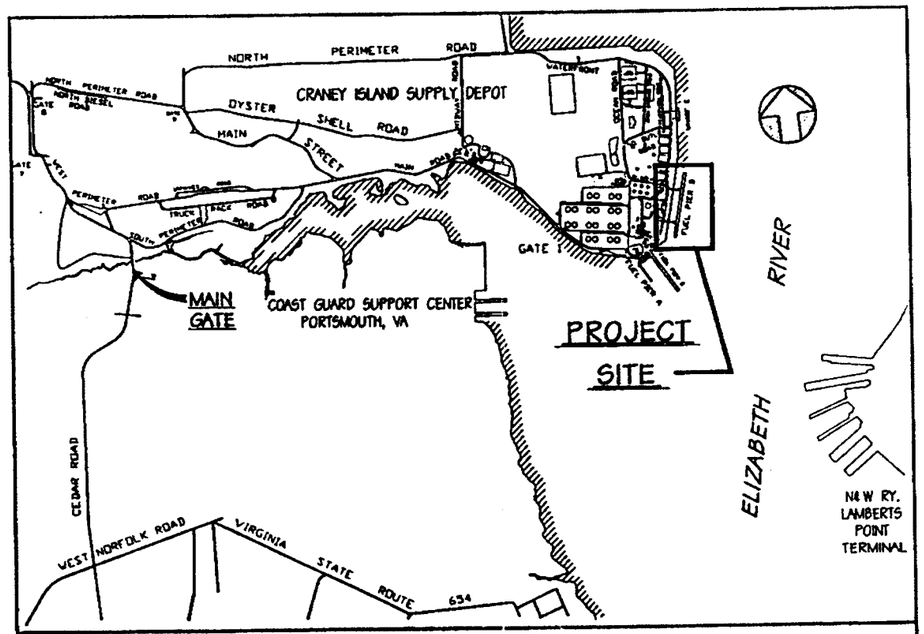

LOCATION MAP
NOT TO SCALE

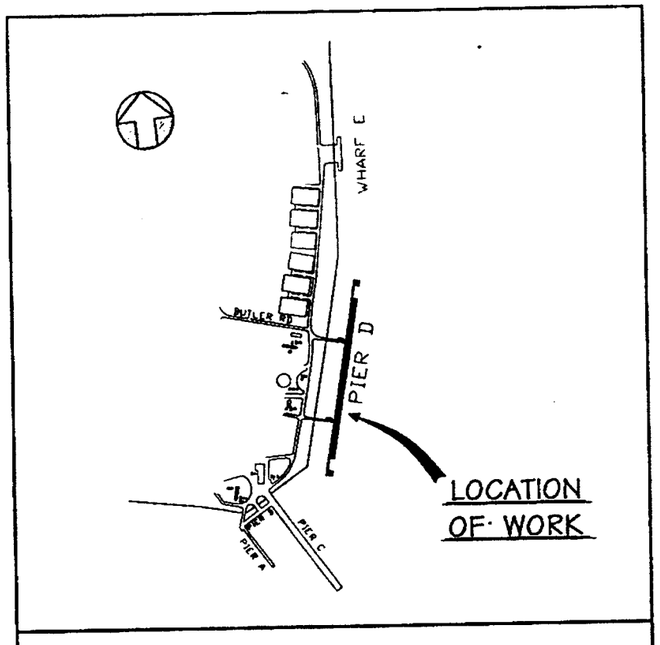

SITE PLAN
NOT TO SCALE

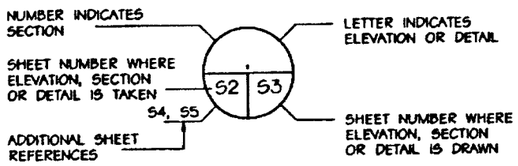

INDEX OF DRAWINGS

SHEET	DRAWING NO.	EFD DRAWING NO.	NAVFAC DRAWING NO.	TITLE
1	T-1	417221	4317221	TITLE SHEET
2	B-1	417222	4317222	BORING LOGS
3	S-1	417223	4317223	MOORING ISLAND LAYOUT AND DESIGN CRITERIA
4	S-2	417224	4317224	MOORING ISLAND AND CATWALK PLAN
5	S-3	417225	4317225	MOORING ISLAND PLAN AND DETAILS
6	S-4	417226	4317226	CATWALK DETAILS
7	S-5	417227	4317227	BOLLARD AND CATWALK DETAILS
8	S-6	417228	4317228	FENDER SYSTEM PLAN AND DETAILS
9	S-7	417229	4317229	CONCRETE PILE DETAILS
10	S-8	417230	4317230	BOLLARD REPLACEMENT
11	E-1	417231	4317231	LIGHTING PLAN AND DETAILS
12	E-2	417232	4317232	LIGHTING SKETCHES

REVISIONS

DESIGNED & ENGINEERED BY: LANTDIV NAVAL FACILITIES ENGINEERING COMMAND

DEPARTMENT OF THE NAVY
ATLANTIC DIVISION
NAVAL FACILITIES ENGINEERING COMMAND
NORFOLK, VIRGINIA
NAVAL STATION
DFSP, CRANEY ISLAND
PORTSMOUTH, VIRGINIA
REPAIR TO MOORING SYSTEM PIER "D"
TITLE SHEET

CODE ID. NO. 80091 SIZE D
SCALE: AS NOTED
EFD NO. 417221
EFA FIELD NO. R703-95
SPEC. NO. 05-94-4301
CONTRC CONTR. NO. N62470-94-B-4301
NAVFAC DRAWING NO. 4317221
SHEET 1 OF 12
T-1

FILENAME: T1.DWG, PLOT SCALE 1=1, SAVED ON 06/23/95 AT 08:06, XREFS: NONE

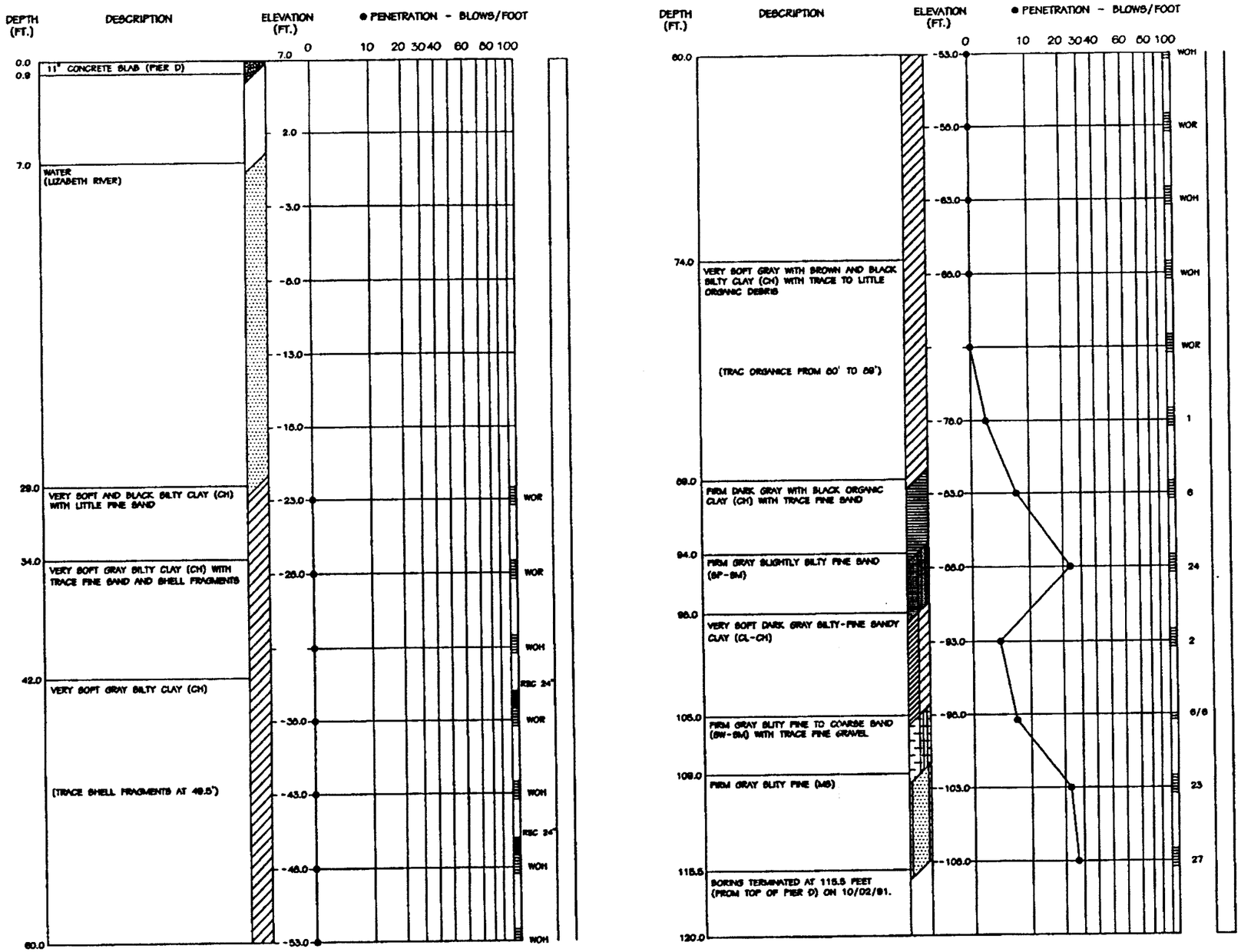

REMARKS:

1. BORING DRILLED THROUGH EXISTING PIER D.
2. WATER ELEVATION ASSUMED TO BE 0.0 FEET, MSL.
3. TIDE FLUCTUATED ABOUT 2.0 FEET DURING DRILLING. OPERATIONS ON 10/02/91.
4. BORING REQUIRED 50 FEET OF CASING.

REVISIONS

DESIGNED & ENGINEERED BY: LANTDIV NAVAL FACILITIES ENGINEERING COMMAND

ACTIVITY - SATISFACTORY TO

DEPARTMENT OF THE NAVY — NAVAL FACILITIES ENGINEERING COMMAND
NAVAL STATION — ATLANTIC DIVISION — NORFOLK, VIRGINIA

DFBP, CRANEY ISLAND — PORTSMOUTH, VIRGINIA

REPAIR TO MOORING SYSTEM PIER "D"

BORING LOGS

SCALE: AS NOTED
CFD NO. 417222
STA. PROJ. NO. R703-95
SPEC. NO. 05-94-4301
CONSTR. CONTR. NO. N62470-94-B-4301
MAPPING DRAWING NO. 4317222
SHEET 2 OF 12

B-1

FILENAME: B1.DWG, PLOT SCALE: 1=1, SAVED ON 06/19/95 AT 09:16, XREFS: NONE

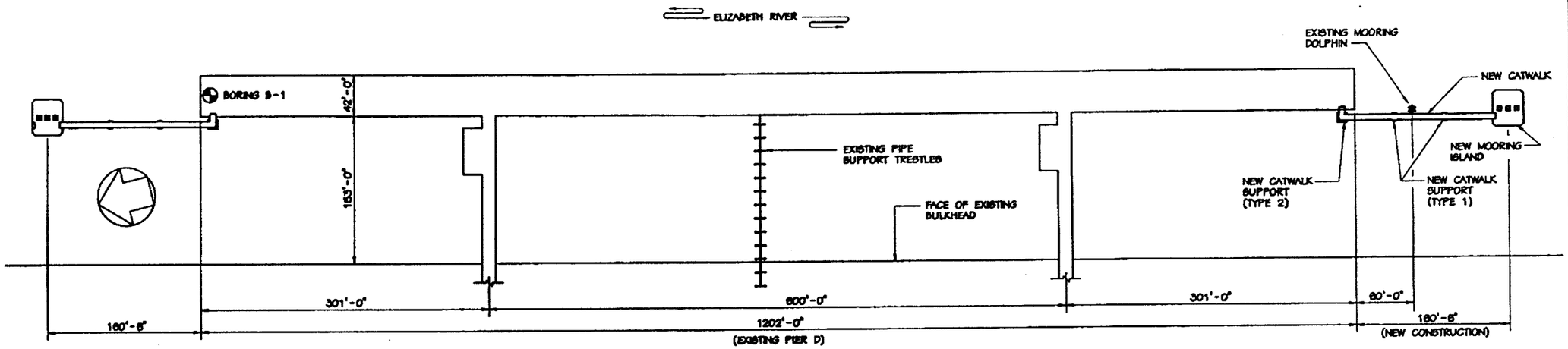

PLAN PIER D

SCALE 1"=60'

GENERAL NOTES:

1 DESIGN VESSEL CHARACTERISTICS:

CLASS		LHA1-5	MPS	AOE 1-4
LENGTH (OVERALL)		820'	821'	796'
BEAM (MAXIMUM)		116'	105.5'	107'
DRAFT (MAXIMUM)		28'	33.6'	41'
DISPLACEMENT (MAXIMUM)		39,400 LG. TN.	52,000 LG. TN.	53,600 LG. TN.
WIND PRESENTMENT AREAS (LIGHT)	SIDE	78,750 S.F.	73,060 S.F.	54,600 S.F.
	END	11,500 S.F.	11,710 S.F.	8,550 S.F.

CLASS		AO	AOR 1-7	LPH
LENGTH (OVERALL)		644'	659'	602'
BEAM (MAXIMUM)		75'	96'	84'
DRAFT (MAXIMUM)		38'	38.5'	31'
DISPLACEMENT (MAXIMUM)		34,750 LG. TN.	37,700 LG. TN.	18,630 LG. TN.
WIND PRESENTMENT AREAS (LIGHT)	SIDE	35,300 S.F.	41,750 S.F.	41,920 S.F.
	END	8,460 S.F.	9,250 S.F.	8,730 S.F.

2 DESIGN MOORING CONDITIONS:

WIND VELOCITY	64 KNOTS
CURRENT	0.5 KNOTS
SEISMIC	ZONE 1

3 DESIGN LIVE LOADS:

MOORING ISLAND	
LATERAL	554 KIPS
LONGITUDINAL	242 KIPS
UNIFORM VERTICAL	250 P.S.F.
BOLLARDS	
HORIZONTAL	265 KIPS
INCLINED	245 KIPS @ 45° UPLIFT
CATWALK	100 P.S.F.
PILE BEARING CAPACITY	100 TONS (COMPRESSION) 50 TONS (TENSION)

4 DESIGN CODES:

GENERAL	MIL-HDBK 1002, DM-7, MIL-HDBK 1025, DM-26
CONCRETE	ACI 318-89
STRUCTURAL STEEL	AISC, 9th EDITION

5 MATERIALS:

CONCRETE (AIR ENTRAINED)	
CAST-IN-PLACE	4000 P.S.I. @ 28 DAYS
PRECAST, PRESTRESSED	5000 P.S.I. @ 28 DAYS
REINFORCING STEEL	
DEFORMED BARS	ASTM A615 GRADE 60
PRESTRESSING STEEL	ASTM A416
STEEL	
SHAPES, PLATES, BARS	ASTM A36
STRUCTURAL PIPE	ASTM A53, TYPE S
THREADED FASTENERS	
BOLLARDS AND CLEATS	ASTM A449
OTHER	ASTM A307
TIMBER	
FENDER PILES	DOUGLAS FIR OR SOUTHERN YELLOW PINE (TIP ELEV. =-60.0)

6 TIMBER WALES SHALL BE PRESSURE TREATED IN ACCORDANCE WITH AWPA C1; AWPA C3 (PILES) AND AWPA C2 (MARINE TIMBERS).

7 CONTRACTOR SHALL FIELD VERIFY ALL DIMENSIONS, ELEVATIONS, ETC. NECESSARY FOR PROPER MATING OF NEW TO EXISTING CONSTRUCTION.

8 CONCRETE COVER FOR REINFORCING SHALL BE AS INDICATED. WHERE COVER IS NOT SHOWN, PROVISIONS OF ACI 318-89 SHALL APPLY.

9 ALL REINFORCING STEEL SHALL BE HELD SECURELY IN PLACE TO PREVENT DISLOCATION DURING THE POURING OPERATION.

10 PROVIDE 1" CHAMFER ON ALL EXPOSED CONCRETE CORNERS

11 NO CONCRETE SHALL BE PLACED UNTIL ALL EMBEDDED WORK HAS BEEN INSTALLED, TESTED, AND INSPECTED.

12 ALL STEEL FASTENERS, PIECES, AND ASSEMBLED FABRICATIONS SHALL BE HOT-DIPPED GALVANIZED.

13 REINFORCING STEEL MARKED CONTINUOUS (CONT.) SHALL BE LAPPED 45 BAR DIAMETERS AT SPLICES. ALL MILD STEEL REINFORCING SHALL BE FUSION BONDED EPOXY COATED AFTER FABRICATION.

14 ALL PILING SUPPORTING THE MOORING ISLAND AND CATWALK SHALL BE 24" SQ. PRESTRESSED CONCRETE PILES. PILES SHALL BE DRIVEN TO A MINIMUM TIP ELEVATION OF -109.00 UNLESS OTHERWISE DIRECTED. THE TIP ELEVATION MAY BE LOWERED PENDING THE FINAL RESULT OF TEST PILE DRIVING AND LOAD TESTING. TEST PILES SHALL BE FURNISHED 10' LONGER THAN THE LENGTH REQUIRED FOR THE INDICATED TIP ELEVATION.

15 PROVIDE AND INSTALL STANDARD PRECAST/PRESTRESSED CONCRETE DOUBLE TEES FACTORY MODIFIED TO 6'-0" WIDE AND 2'-11" HIGH (INCLUDES 5" THICK FLANGE SLAB). PROVIDE DESIGN AND DETAILS OF ALL PRESTRESSED AND MILD STEEL REINFORCING FOR APPROVAL WITH SHOP DRAWINGS.

16 THE EXISTING PIER IS A FUELING FACILITY AND SHALL REMAIN IN FULL OPERATION DURING CONSTRUCTION. CONSTRUCTION OPERATIONS SHALL NOT BLOCK VESSEL ACCESS TO THE PIER AT ANY TIME. PRIOR TO PERFORMING ANY WELDING OR TORCH CUTTING IN THE IMMEDIATE VICINITY OF THE FUELING PIER, CONTRACTOR SHALL REQUEST CLEARANCE FROM THE FUELING DEPOT AND PROVIDE A MINIMUM 2 WEEK NOTICE TO THE CONTRACTING OFFICER.

GRAPHIC SCALE

1"=60' 0' 60' 120' 180' 240' 300'

REVISIONS

SYM	DESCRIPTION	DATE	APPROVED

DESIGNED & SUPERVISED BY: LANTDIV NAVAL FACILITIES ENGINEERING COMMAND

ACTIVITY - SUPERVISORY TO: 7/20/92

DEPARTMENT OF THE NAVY
NAVAL STATION
ATLANTIC DIVISION
NORFOLK, VIRGINIA
PORTSMOUTH, VIRGINIA
DFSP, CRANEY ISLAND
REPAIR TO MOORING SYSTEM
PIER "D"
MOORING ISLAND LAYOUT AND DESIGN CRITERIA

CODE ID. NO. 80091 SIZE D
SCALE AS NOTED
SFP NO. 417223
SFP. FIGU NO. R703-95
SPEC. NO. 05-94-4301
CONTRACT CONTR. NO. N62470-94-B-4301
NAVFAC DRAWING NO. 4317223
SHEET 3 OF 12
S-1

FILENAME: S1.DWG, PLOT SCALE: 1=1, SAVED ON 07/11/95 AT 15:32, XREFS: NONE

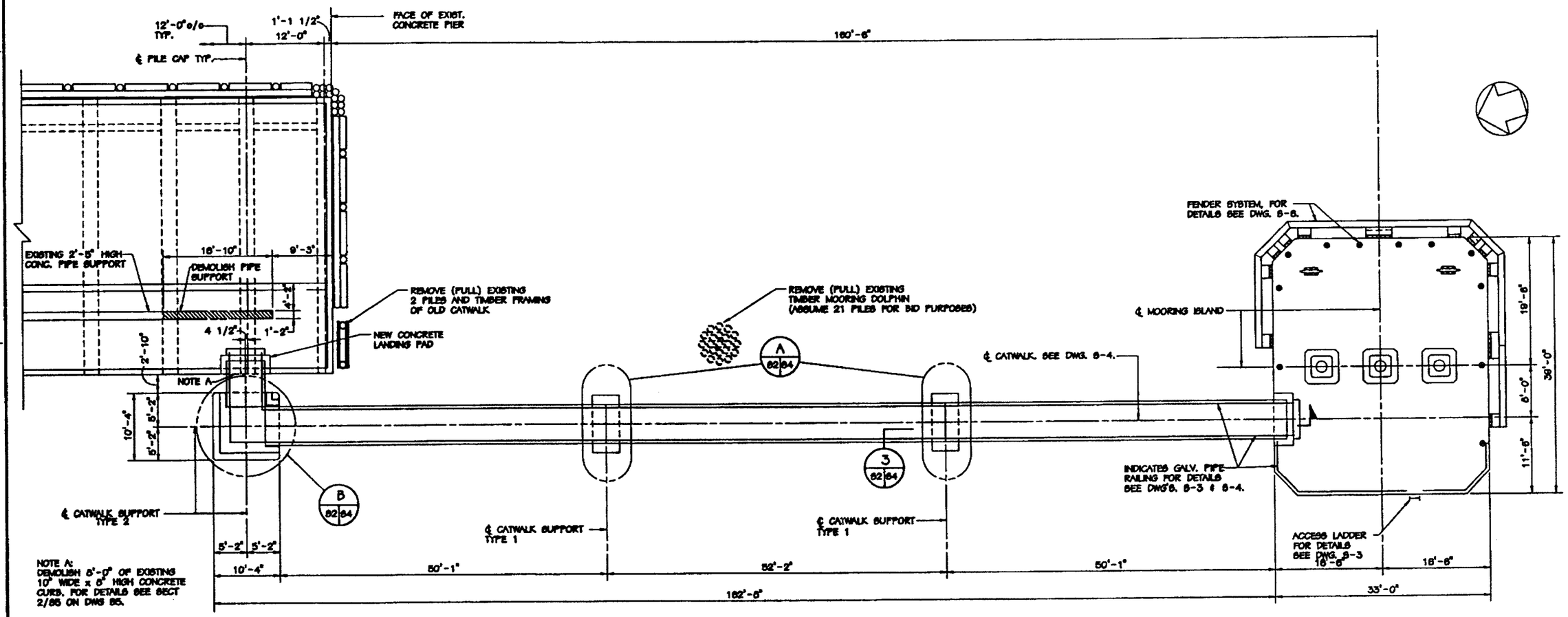

NOTE A:
DEMOLISH 5'-0" OF EXISTING 10" WIDE x 5" HIGH CONCRETE CURB. FOR DETAILS SEE SECT 2/85 ON DWG 85.

PLAN PIER D MOORING ISLAND AND CATWALK

SCALE: 1/8"=1'-0"

GRAPHIC SCALE

1/8"=1'-0" 0' 5' 10' 20' 30'

REVISIONS

DESIGNED & ENGINEERED BY: LANTDIV NAVAL FACILITIES ENGINEERING COMMAND

ACTIVITY - SATISFACTORY TO

DEPARTMENT OF THE NAVY
NAVAL STATION
ATLANTIC DIVISION
NAVAL FACILITIES ENGINEERING COMMAND
NORFOLK, VIRGINIA

DFSP, CRANEY ISLAND
PORTSMOUTH, VA
REPAIR MOORING SYSTEM
PIER "D"
MOORING ISLAND AND CATWALK PLAN

SCALE: AS NOTED
DWG NO. 417224
CONTR. NO. R703-95
SPEC. NO. 05-94-4301
CONSTR. CONTR. NO. N62470-94-B-4301
MAPPING DRAWING NO. 4317224
SHEET 4 OF 12

S-2

FILENAME: S2M.DWG, PLOT SCALE: 1=1, SAVED ON 07/11/95 AT 16:12, XREFS: NONE

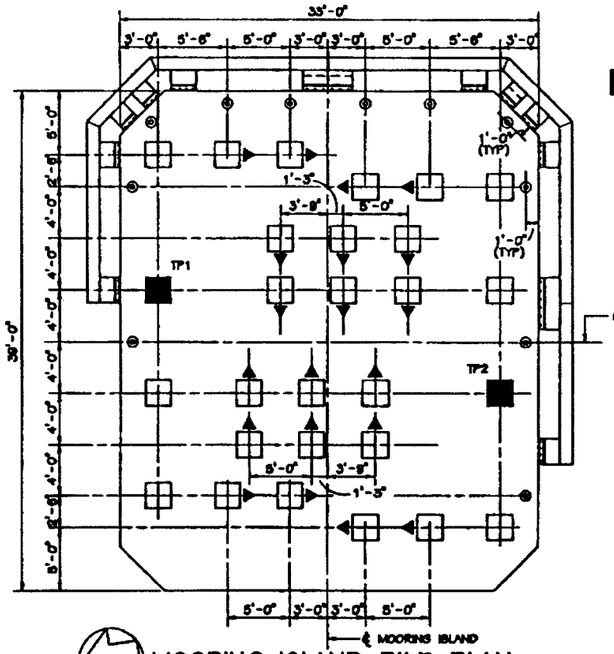

MOORING ISLAND PILE PLAN

SCALE: 3/16"=1'-0"

■ DENOTES TEXT PILE LOCATION

▼ DENOTES BATTER PILE DIRECTION OF BATTER (5 IN 12)

NOTE:
TP1 AND TP2 DENOTE DRIVING TEST PILE LOCATIONS. CONTRACTING OFFICER SHALL SELECT ONE TEST PILE FOR A LOAD TEST.

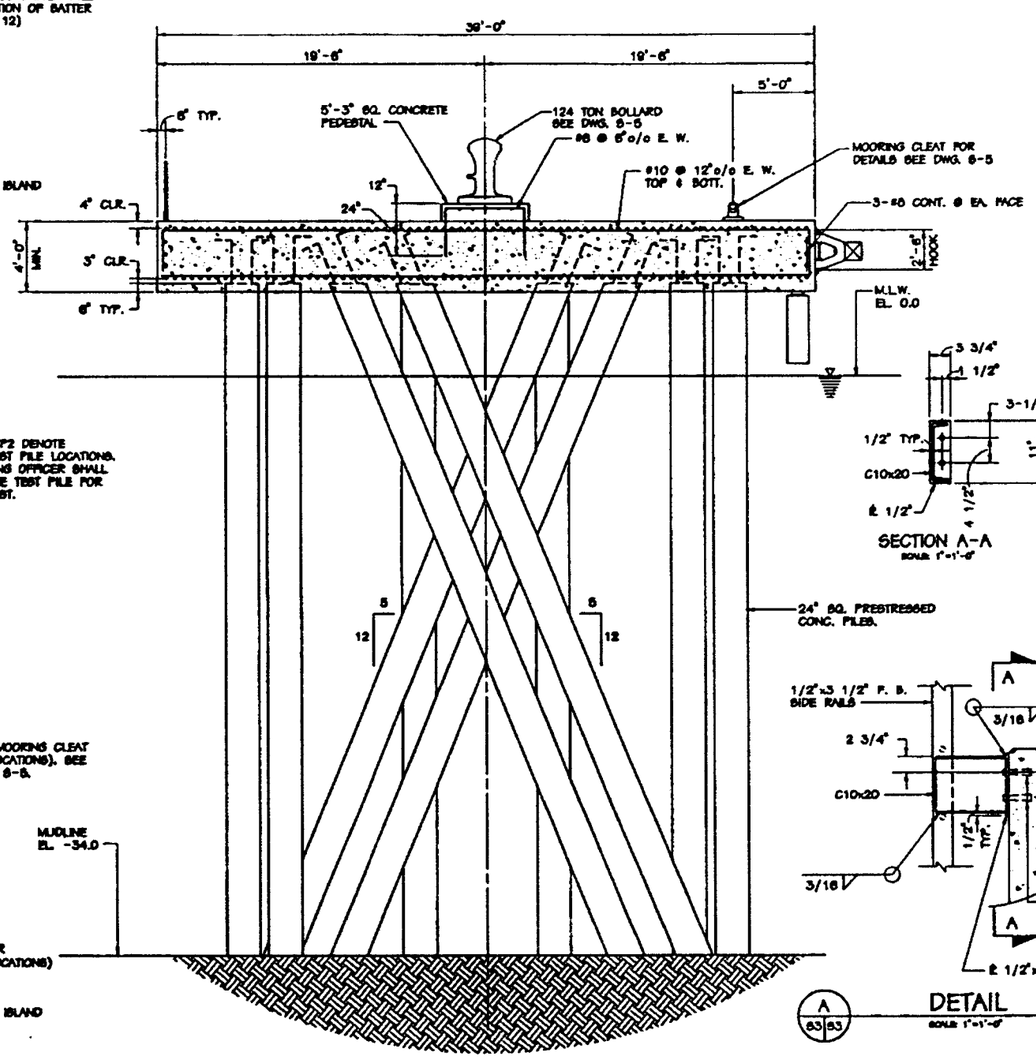

SECTION

SCALE: 1/4"=1'-0"

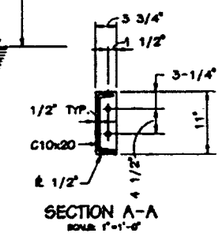

SECTION A-A

SCALE: 1"=1'-0"

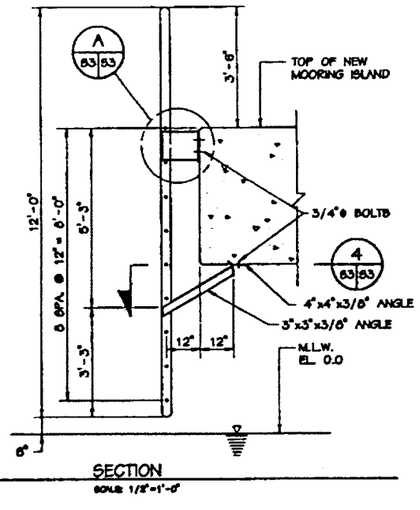

2 63/63 SECTION

SCALE: 1/2"=1'-0"

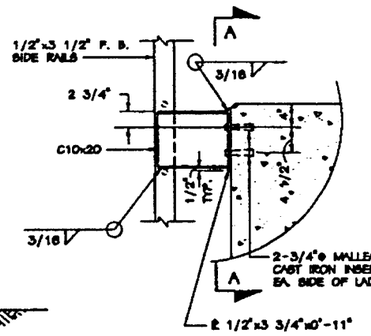

A 63/63 DETAIL

SCALE: 1"=1'-0"

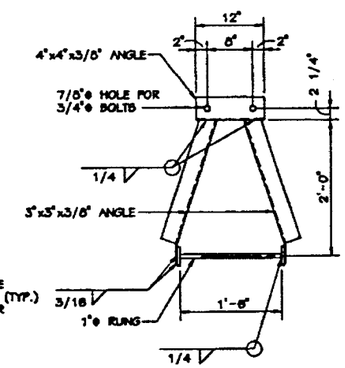

4 63/63 SECTION

SCALE: 1"=1'-0"

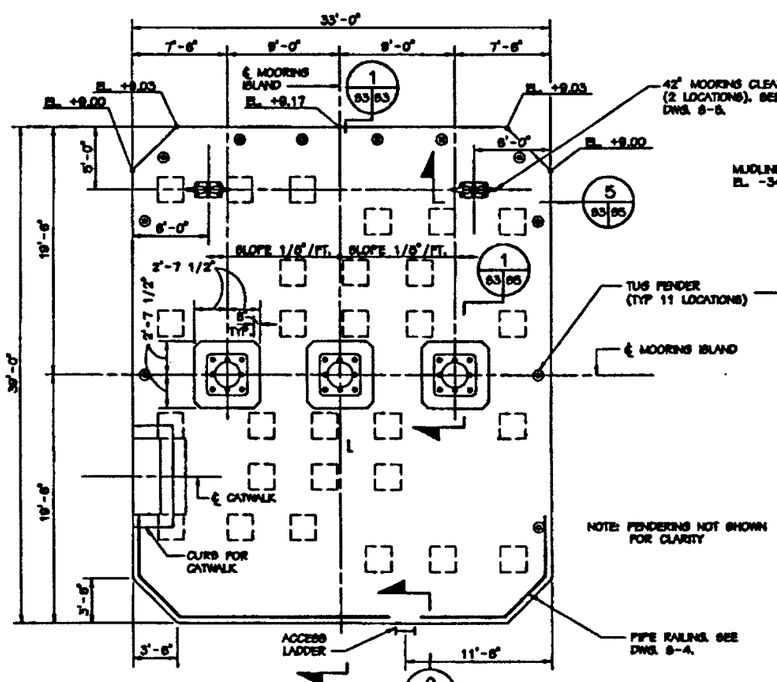

MOORING ISLAND DECK PLAN

SCALE: 3/16"=1'-0"

MUDLINE EL. -34.0

NOTE: FENDERING NOT SHOWN FOR CLARITY

GRAPHIC SCALES

3/16"=1'-0" 0' 5' 10' 20'

1/4"=1'-0" 1' 0' 1' 5' 10' 15'

1/2"=1'-0" 1' 0' 1' 2' 3' 4' 5'

1"=1'-0" 1' 6" 0' 1' 2' 3'

REVISIONS

SYM	DESCRIPTION	DWN	APPD	DATE

DESIGNED & ENGINEERED BY: LANTDIV NAVAL FACILITIES ENGINEERING COMMAND

DEPARTMENT OF THE NAVY
ATLANTIC DIVISION
NAVAL FACILITIES ENGINEERING COMMAND
NORFOLK, VIRGINIA

NAVAL STATION
PORTSMOUTH, VA

DFBP, CRANEY ISLAND
REPAIR TO MOORING SYSTEM
PIER "D"

MOORING ISLAND PLAN AND DETAILS

SCALE	AS NOTED
SFO NO.	417225
NAVFac PROJ. NO.	R703-95
SPEC. NO.	05-94-4301
CONTRACT DRAWING NO.	N62470-94-B-4301
CONTRACT DRAWING NO.	4317225
SHEET	5 OF 12

S-3

FILENAME: 63M.DWG, PLOT SCALE: 1=1, SAVED ON 07/12/95 AT 11:25, XREFS: NONE

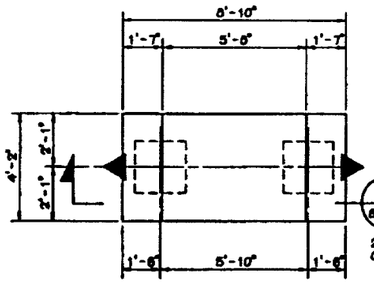

CATWALK SUPPORT TYPE 1

A 82|84 PLAN DETAIL
SCALE: 3/8"=1'-0"

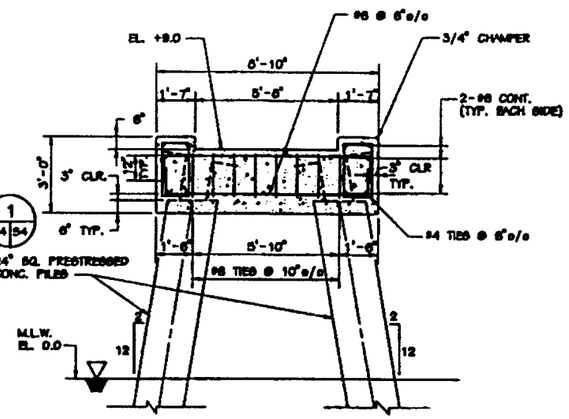

1 | 84|84 SECTION
SCALE: 3/8"=1'-0"

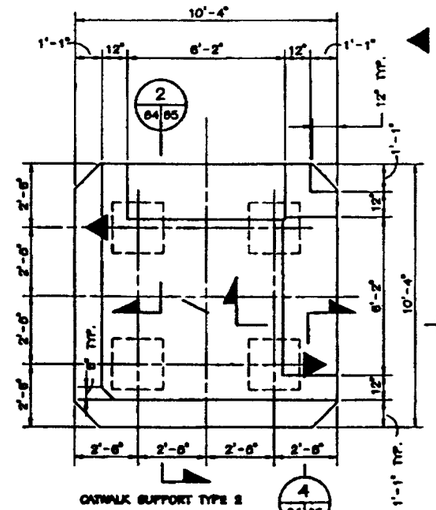

NOTE: DEFINES DIRECTIONAL PILE BATTER (2 IN 12)

CATWALK SUPPORT TYPE 2

B 82|84 PLAN DETAIL
SCALE: 3/8"=1'-0"

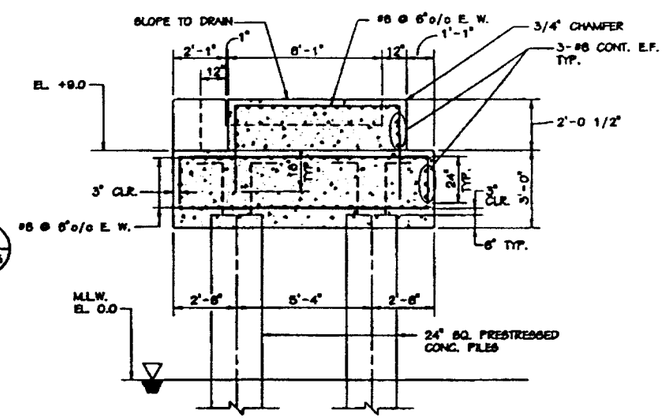

2 | 84|84 SECTION
SCALE: 3/8"=1'-0"

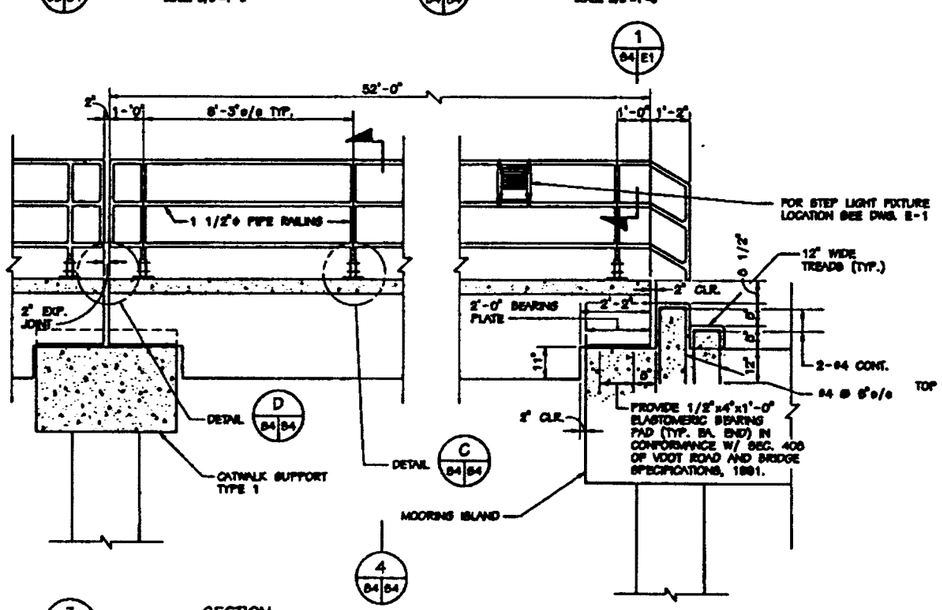

1 | 84|E1

3 | 82|84 SECTION
SCALE: 1/2"=1'-0"

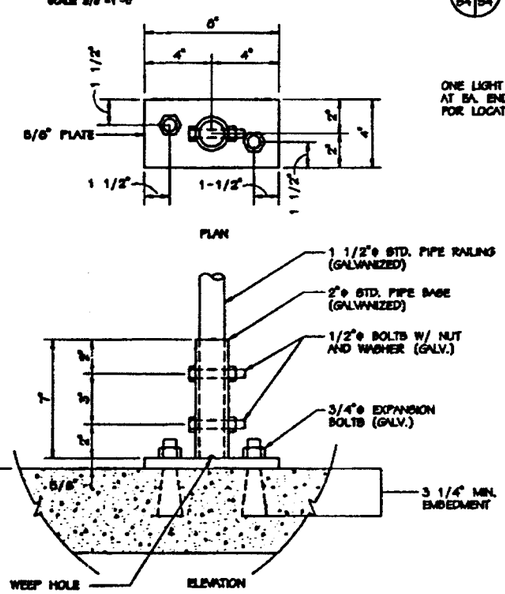

C 84|84 | 85 DETAIL
SCALE: 6"=1'-0"

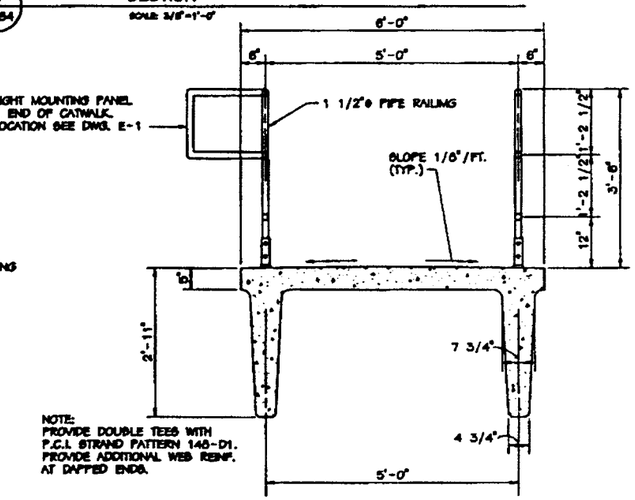

4 | 84|84 SECTION
SCALE: 3/4"=1'-0"

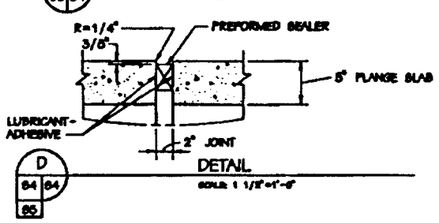

D 84|84 | 85 DETAIL
SCALE: 1 1/2"=1'-0"

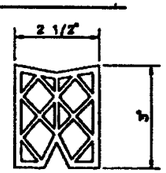

(IN UNCOMPRESSED STATE)

NOTE:
PREFORMED ELASTOMERIC EXPANSION DAM SHALL BE PROVIDED IN ACCORDANCE WITH SEC. 421 OF VDOT ROAD AND BRIDGE SPECIFICATIONS, 1991.

PREFORMED ELASTOMERIC JOINT SEALER
NOT TO SCALE

GRAPHIC SCALE

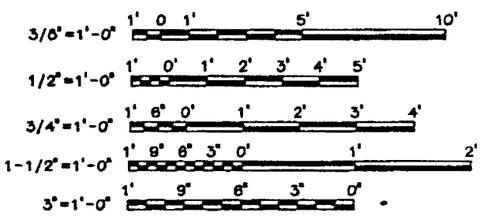

REVISIONS

NO.	DATE	DESCRIPTION	BY	APPROVED

DESIGNED | ENGINEERED BY: R.D.C.
DRAWN: R.D.C.
CHECKED: J.C.
SUPV: JOHN J. HOM
PROJECT MANAGER: HDM
SUBMITTED: 7/30/95
DATE: 7/30/95

LANTDIV
NAVAL FACILITIES ENGINEERING COMMAND

ACTIVITY - SATISFACTORY TO: 7/30/95

DEPARTMENT OF THE NAVY
NAVAL STATION
NAVAL FACILITIES ENGINEERING COMMAND
ATLANTIC DIVISION
NORFOLK, VIRGINIA

PORTSMOUTH, VA
DPBP, CRANEY ISLAND
REPAIR TO MOORING SYSTEM
PIER "D"
CATWALK DETAILS

CODE ID. NO. 80091 SIZE D
SCALE AS NOTED
WP NO. 417228
STA. PROJ. NO. R703-95
SPEC. NO. 05-94-4301
CONTR. DWG. NO. N62470-94-B-4301
DRAWING SHEET NO. 4317228
SHEET 6 OF 12

S-4

FILENAME: 84.DWG, PLOT SCALE: 1=1, SAVED ON 07/11/95 AT 16:39, XREFS: NONE

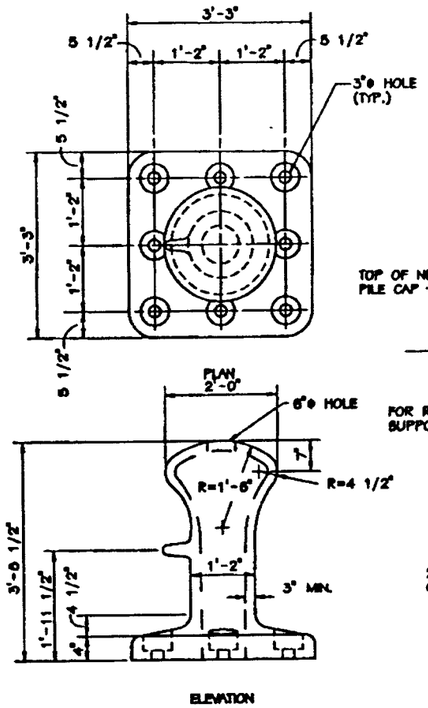

TYPICAL 124 TON BOLLARD
SCALE: 3/4"=1'-0"

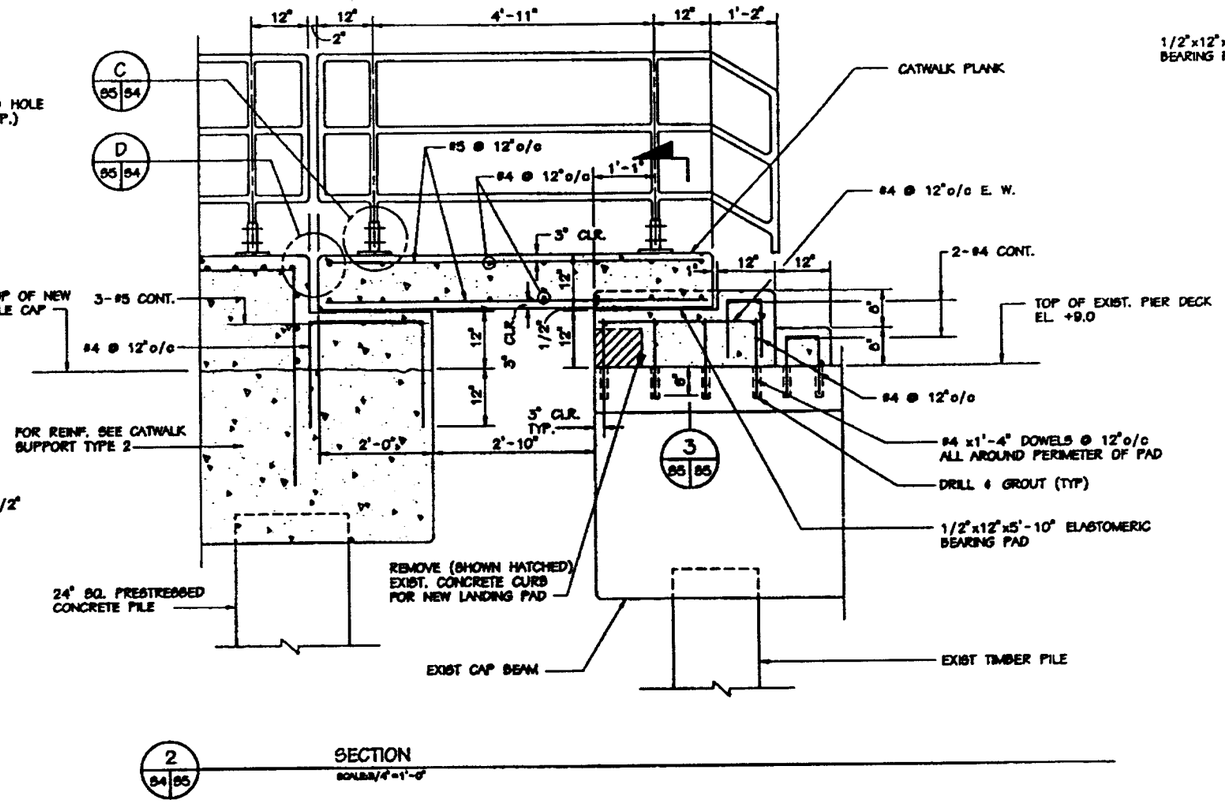

2 84 65 SECTION
SCALE: 3/4"=1'-0"

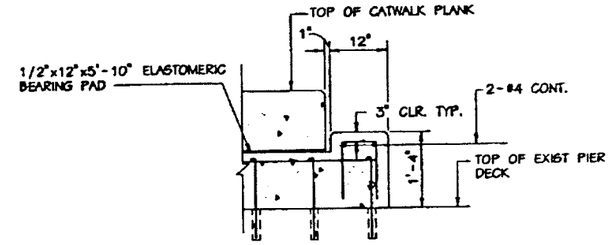

NOTE:
FOR REINF. NOT NOTED SEE SECT. 1/65.

3 65 65 SECTION
SCALE: 3/4"=1'-0"

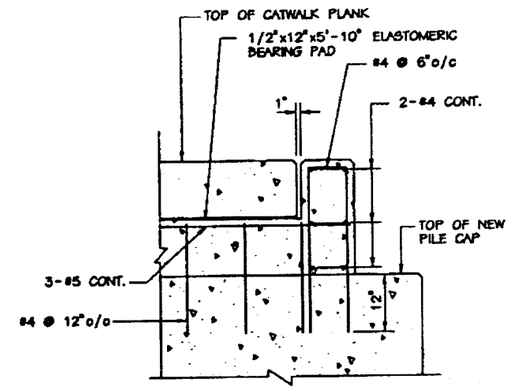

4 54 65 SECTION
SCALE: 3/4"=1'-0"

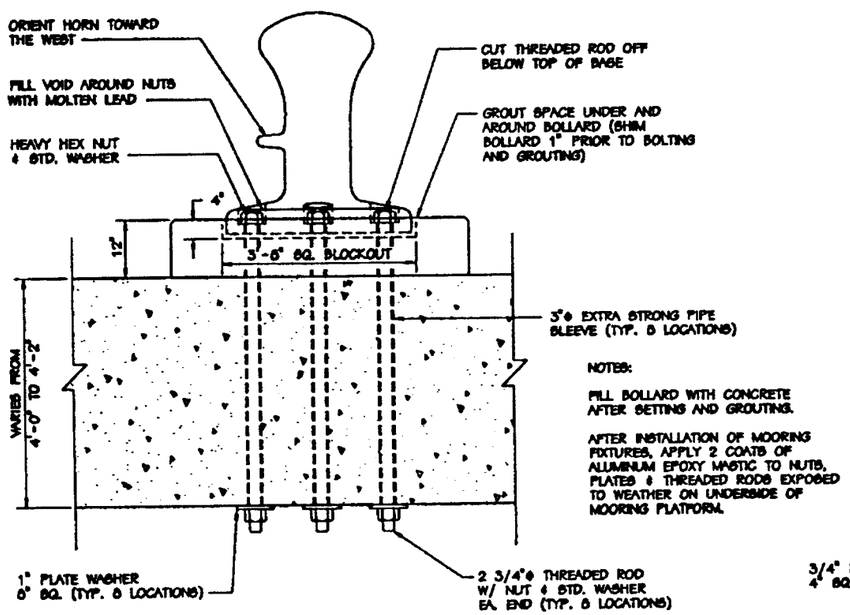

NOTES:

FILL BOLLARD WITH CONCRETE AFTER SETTING AND GROUTING.

AFTER INSTALLATION OF MOORING FIXTURES, APPLY 2 COATS OF ALUMINUM EPOXY MASTIC TO NUTS, PLATES & THREADED RODS EXPOSED TO WEATHER ON UNDERSIDE OF MOORING PLATFORM.

1 83 65 SECTION
SCALE: 3/4"=1'-0"

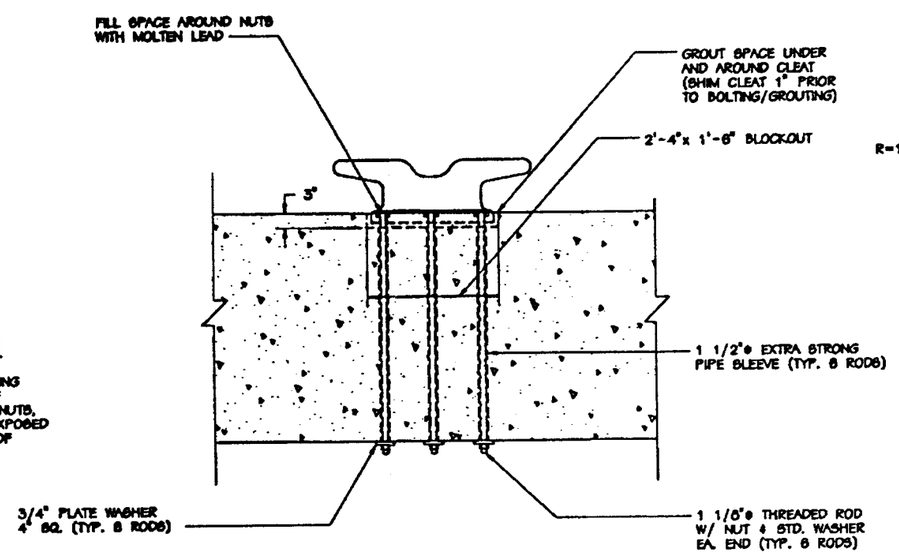

5 83 65 SECTION
SCALE: 3/4"=1'-0"

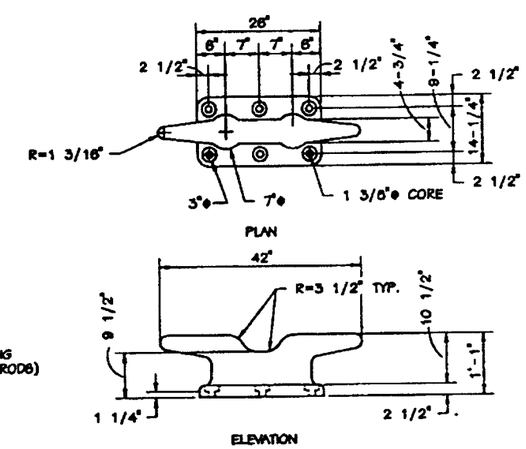

42" CLEAT DETAIL
SCALE: 3/4"=1'-0"

GRAPHIC SCALE
3/4"=1'-0" 1' 6" 0' 1' 2' 3' 4'

NO.	REVISIONS	DESCRIPTION	DATE	APPROVED

DESIGNED & ENGINEERED BY: LANTDIV NAVAL FACILITIES ENGINEERING COMMAND
DATE
DESIGN
DRAWN
CHKD
CHIEF ENGINEER
PROJECT MANAGER
PRE PROTECTION
SAFETY ENGINEER
DIVISION MANAGER
DIVISION DIRECTOR

ACTIVITY:- SATISFACTORY TO
CHIEF OF THE ENGINEERING DIVISION

DEPARTMENT OF THE NAVY
NAVAL STATION
ATLANTIC DIVISION
NAVAL FACILITIES ENGINEERING COMMAND
NORFOLK, VIRGINIA

PORTSMOUTH, VA
DFSP, CRANEY ISLAND
REPAIR TO MOORING SYSTEM
PIER "D"

BOLLARD AND CATWALK DETAILS

CODE ID. NO. 80091 SIZE D
SCALE AS NOTED
SHIP NO. 417227
DIV. PROJ. NO. R703-95
SPEC. NO. 05-94-4301
CONTR. CODE NO. N62470-94-B-4301
PROJECT DRAWING NO. 4317227
SHEET 7 OF 12
S-5

PILENAME: 65.DWG, PLOT SCALE: 1=1, SAVED ON 07/11/95 AT 18:49, XREFS: NONE

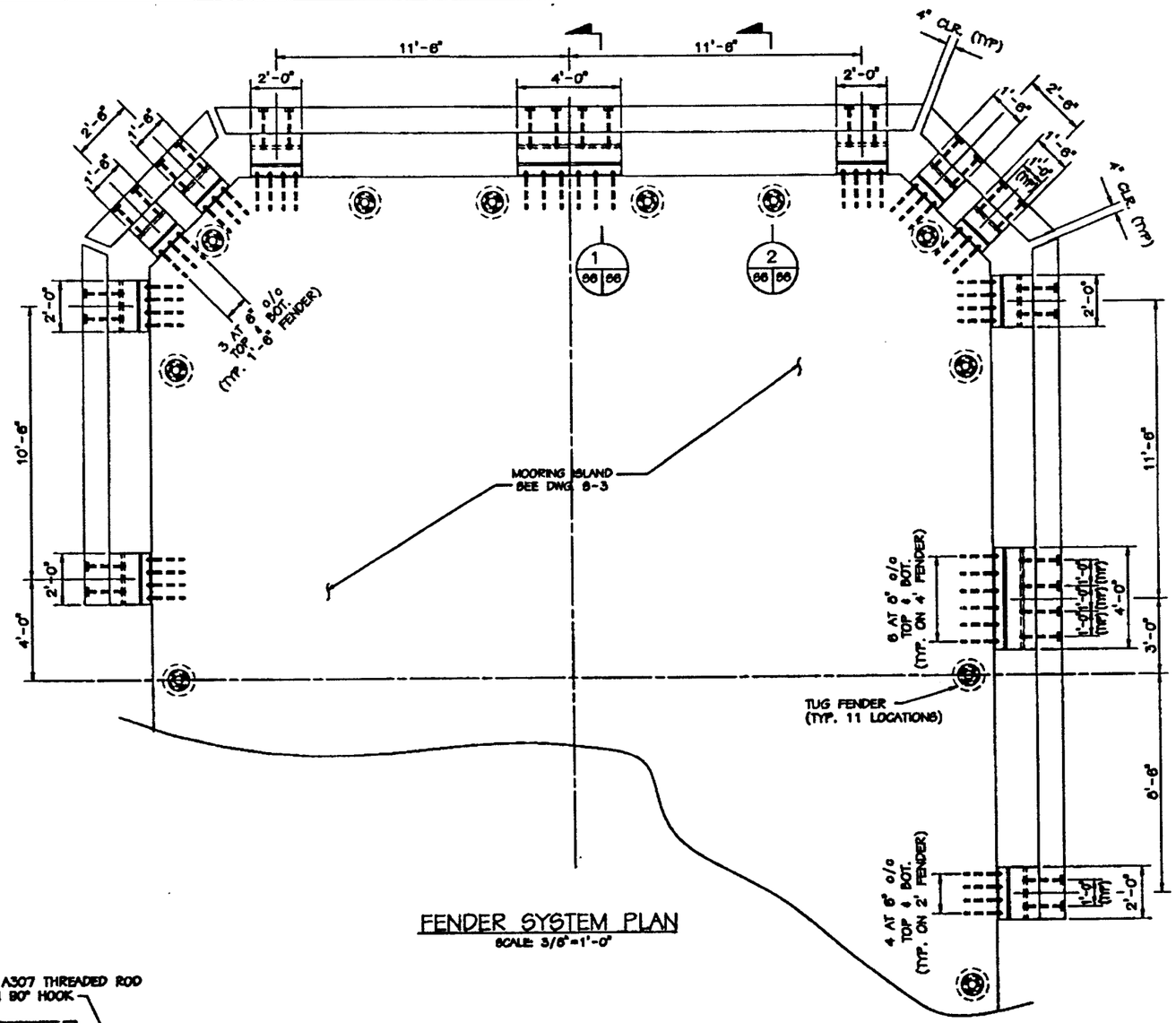

FENDER SYSTEM PLAN
SCALE: 3/8"=1'-0"

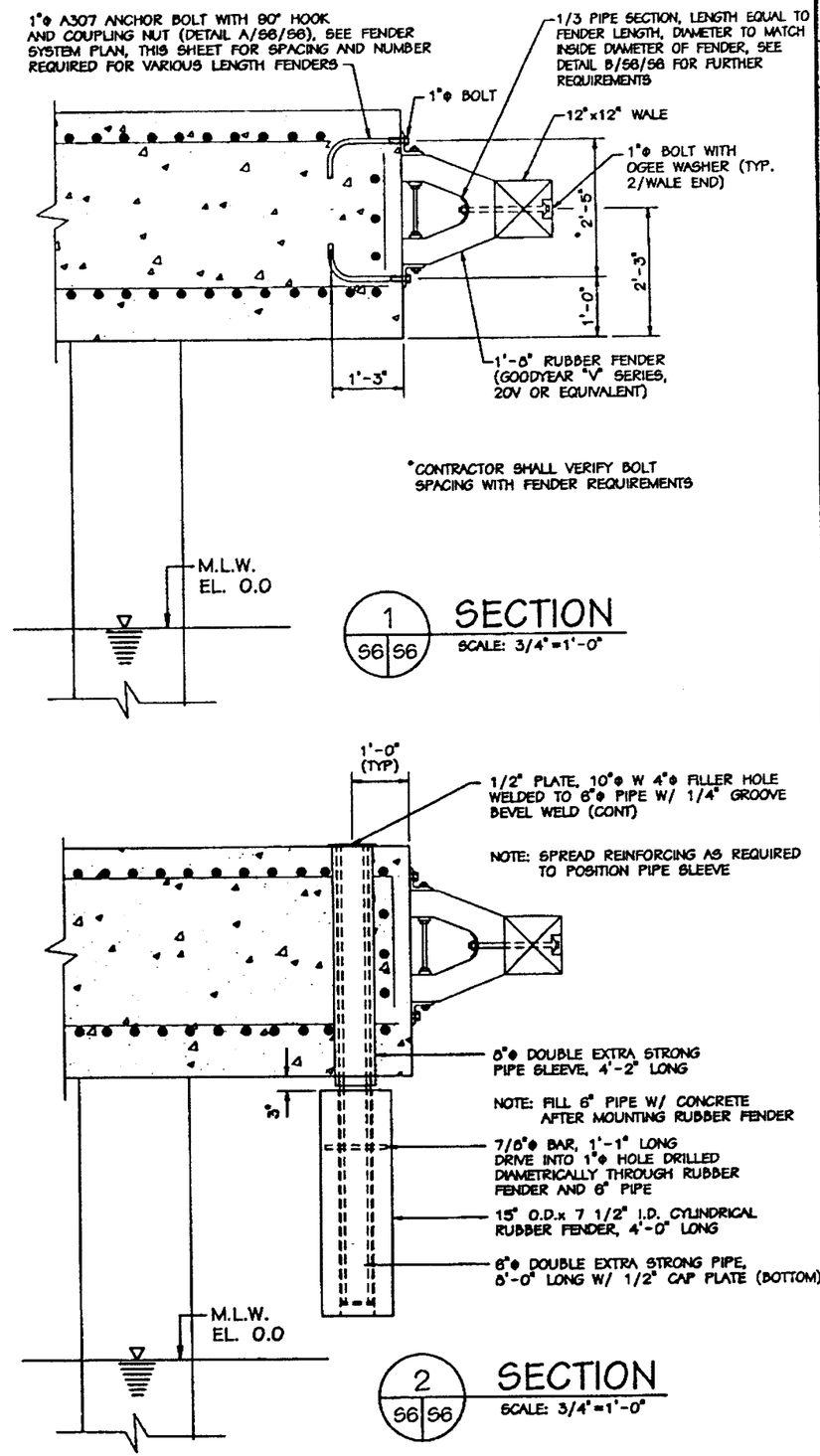

1 S6 S6 SECTION
SCALE: 3/4"=1'-0"

2 S6 S6 SECTION
SCALE: 3/4"=1'-0"

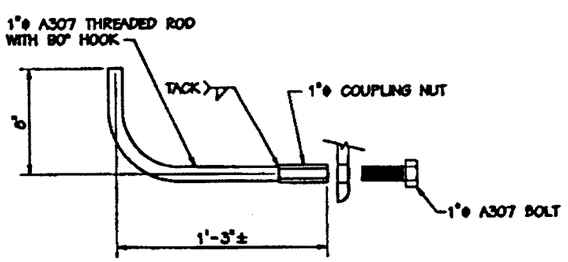

A S6 S6 1"Φ ANCHOR BOLT WITH COUPLING NUT DETAIL
NOT TO SCALE

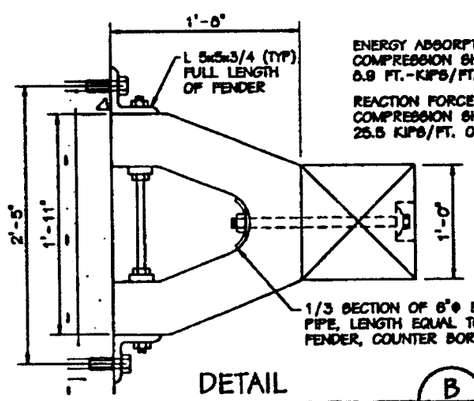

ENERGY ABSORPTION AT 6" FENDER COMPRESSION SHALL BE 6.9 FT.-KIPS/FT. OF FENDER

REACTION FORCE AT 6" FENDER COMPRESSION SHALL NOT EXCEED 25.5 KIPS/FT. OF FENDER

DETAIL B S6 S6
SCALE 1 1/2" = 1'-0"

GRAPHIC SCALE
3/8"=1'-0" 1' 0 1' 5' 10'
3/4"=1'-0" 1' 6" 0' 1' 2' 3' 4'

REVISIONS

DESIGNED & ENGINEERED BY: LANTDIV NAVAL FACILITIES ENGINEERING COMMAND
ACTIVITY - ENGINEERED TO
APPROVED: 07/12/95

ATLANTIC DIVISION
NAVAL FACILITIES ENGINEERING COMMAND
NORFOLK, VIRGINIA
DEPARTMENT OF THE NAVY
NAVAL STATION
PORTSMOUTH, VA
DFSP, CRANEY ISLAND
REPAIR TO MOORING SYSTEM PIER "D"
FENDER SYSTEM PLAN AND DETAILS

SCALE: AS NOTED
SPD NO. 417228
NFA PROJ. NO. R703-95
SPEC. NO. 05-94-4301
N62470-94-B-4301
4317228
SHEET 6 OF 12
S-6

FILENAME: S6A.DWG, PLOT SCALE: 1=1, SAVED ON 07/12/95 AT 11:17, XREFS: NONE

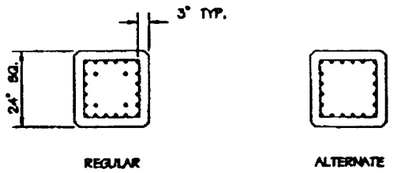

SECTION A-A
STRAND PATTERNS FOR PILES
WITH S.R. STRANDS

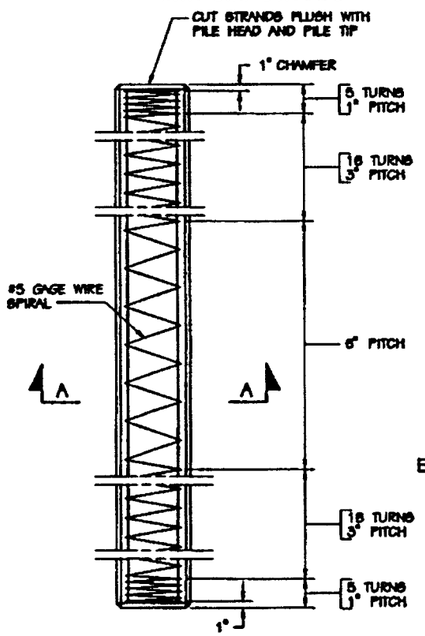

ELEVATION

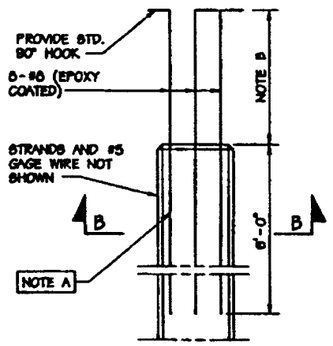

ELEVATION

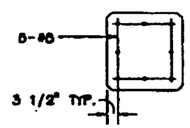

SECTION B-B

NOTES:

CONCRETE FOR 24" SQ. PRESTRESSED PILES SHALL HAVE A MIN. COMPRESSIVE STRENGTH OF 5000 PSI AT AN AGE OF 28 DAYS

MINIMUM COMPRESSIVE STRENGTH OF CONCRETE FOR 24" SQ. PRESTRESSED PILES AT TIME OF RELEASE OF STRANDS SHALL BE 3500 PSI.

DEFORMED REINFORCING BARS SHALL CONFORM TO ASTM A615, GRADE 60.

ALL PRESTRESSING STRANDS SHALL BE 270K.

WHERE PILES ARE EXPOSED IN TIDAL WATER, THE SPIRAL TIES AND ALL OTHER MILD REINFORCING STEEL IN THE PILE SHALL BE EPOXY COATED.

APPLY AN EPOXY RESIN COATING ON ALL PRESTRESSED CONCRETE PILING A MINIMUM OF 20'-0" BELOW BUTT OF PILE. APPLY EPOXY COATING IN ACCORDANCE WITH SEC. 403.03(I) OF THE VDOT ROAD & BRIDGE SPECIFICATIONS, 1991.

NOTE A:
PROVIDE 1 3/8"ϕ PREFORMED PLAIN HOLES OR 2"ϕ HOLES FORMED WITH GALVANIZED CORRUGATED METAL. AFTER DRIVING THE PILE AND CLEANING OUT THE HOLES THE #5 REINFORCING BARS SHALL BE INSTALLED AND THE HOLES SHALL BE FILLED WITH APPROVED EPOXY-RESIN GROUT.

NOTE B:
1'-6" @ CATWALK SUPPORT TYPES 1 & 2
2'-6" @ MOORING ISLAND

POINTS	PICK UP POINTS
1	0.292L, 0.708L; L
2	0.207L, 0.586L, 0.207L; L
3	0.145L, 0.355L, 0.355L, 0.145L; L
4	0.107L, 0.262L, 0.262L, 0.262L, 0.107L; L

UNLESS SPECIAL LIFTING DEVICES ARE ATTACHED FOR PICK-UP, PICK-UP POINTS SHALL BE PLAINLY MARKED ON ALL PILES AFTER REMOVAL OF THE FORMS. THE PILE SHALL BE SUPPORTED ONLY AT THE INDICATED PICK-UP POINTS WHILE IN STORAGE OR BEING HANDLED. THE USE OF PROPER RIGGING IS REQUIRED TO ENSURE THAT THAT THE PICK-UP POINTS REMAIN IN A STRAIGHT LINE DURING LIFTING AND WHEN POSITIONING THE PILE FOR DRIVING. THE USE OF SPECIAL EMBEDDED OR ATTACHED LIFTING DEVICES, THE EMPLOYMENT OF OTHER PICK-UP POINTS OR ANY OTHER METHOD OF PICK UP SHALL BE SUBJECT TO APPROVAL BY THE CONTRACTING OFFICER.

PILE PICK-UP DATA

PILE SIZE	APPROX. WT. PER LIN. FT. POUNDS	MAXIMUM LENGTHS FOR VARIOUS PICK-UP SYSTEMS			
		1-POINT	2-POINT	3-POINT	4-POINT
		L	L	L	L
24"	600	72'	102'	146'	198'

MAXIMUM LENGTHS ARE DETERMINED FROM IMPACT LOADS. L IS THE MAXIMUM PICK-UP LENGTH BASED ON A CONCRETE COMPRESSIVE STRENGTH OF 5000 PSI. IF PILES ARE PICKED UP WHEN THE CONCRETE STRENGTH IS LESS THEN 5000 PSI, THE MAXIMUM PICK-UP LENGTH SHALL BE THE TABULATED LENGTH REDUCED BY 1% FOR EVERY 250 PSI BELOW 5000 PSI.

PILE DATA

FILE SIZE	PILES WITH STRESS-RELIEVED STRANDS						PILES WITH LOW-RELAXATION STRANDS			
	NO. AND SIZE OF S.R. STRANDS		TOTAL PRETENSIONING FORCE-POUNDS		UNIT PRESTRESS (AFTER LOSSES) PSI		NO. AND SIZE OF L.R. STRANDS	TOTAL PRETENSIONING FORCE-POUNDS	UNIT PRESTRESS (AFTER LOSSES) PSI	SECTION MODULUS IN.³
	REGULAR	ALTERNATE	REGULAR	ALTERNATE	REGULAR	ALTERNATE				
24"	24-7/16"ϕ	20-1/2"ϕ	520,800	576,200	723	603	20-7/16"ϕ	456,440	700	2,304

REVISIONS

DESCRIPTION	DATE	APPROVED

DESIGNED & ENGINEERED BY: LANTDIV NAVAL FACILITIES ENGINEERING COMMAND
APPROVED
ACTIVITY - RESPONSIBLE TO: APPROVED 7/20/95
DATE

DEPARTMENT OF THE NAVY
NAVAL STATION
ATLANTIC DIVISION
NAVAL FACILITIES ENGINEERING COMMAND
NORFOLK, VIRGINIA
PORTSMOUTH, VA
DFSP, CRANEY ISLAND
REPAIR TO MOORING SYSTEM
PIER "D"
CONCRETE PILE DETAILS

SCALE: AS NOTED
SPF NO. 417229
ENG. PROJ. NO. E703-95
ACTIVITY NO. 05-94-4301
CONTRACT DRAWING NO. N62470-94-B-4301
NAVFAC DRAWING NO. 4317229
SHEET 9 OF 12
S-7

FILENAME: S7.DWG, PLOT SCALE: 1=1, SAVED ON 07/12/95 AT 12:03, XREFS: NONE

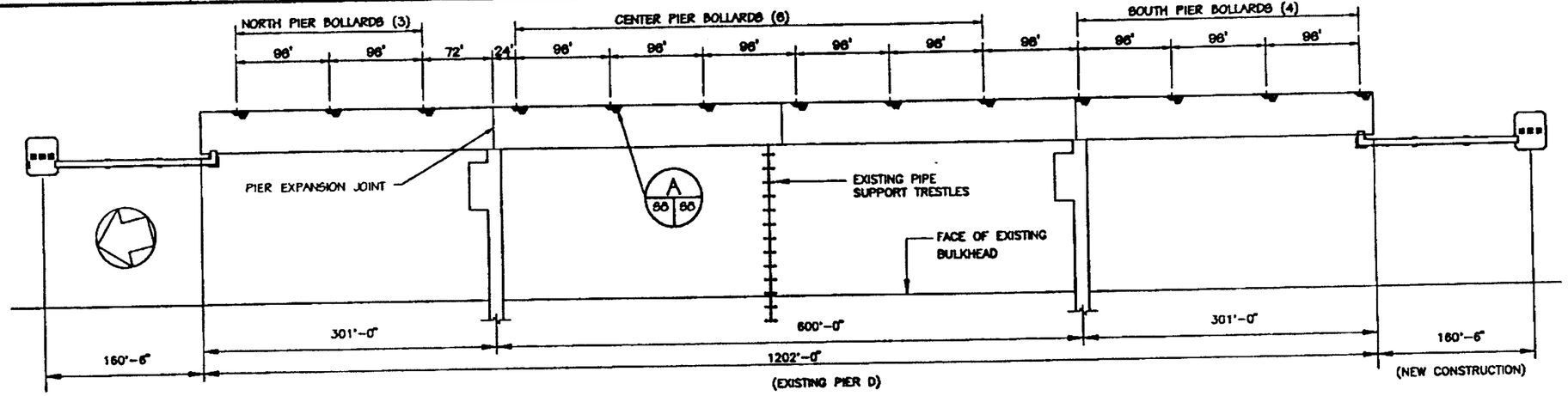

PLAN PIER D

NOT TO SCALE

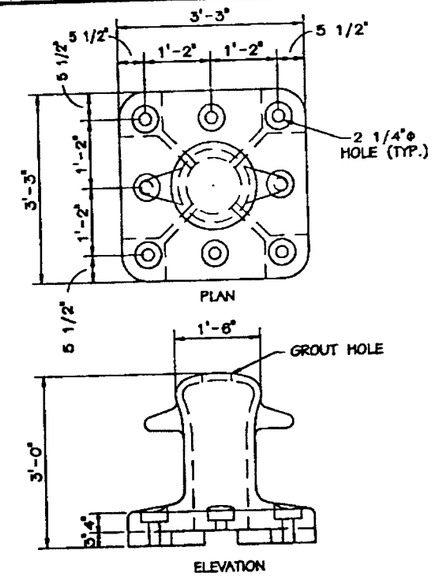

TYPICAL 95 TON BOLLARD

SCALE 3/4" = 1'-0"

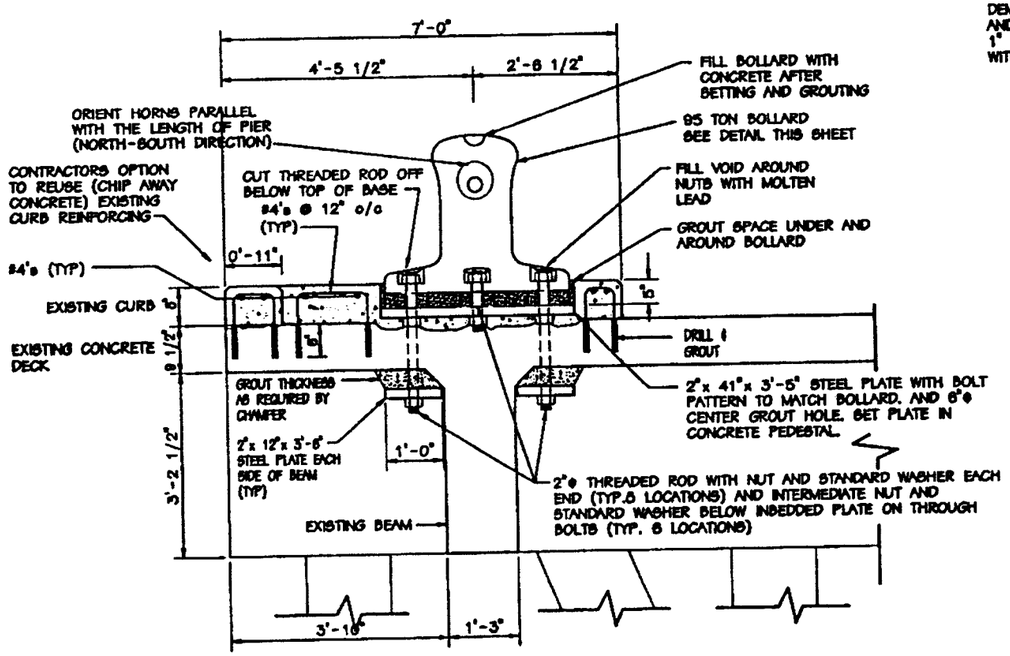

NOTE: AFTER INSTALLATION OF MOORING BOLLARDS, APPLY 2 COATS OF ALUMINUM EPOXY MASTIC TO NUTS, PLATES AND THREADED RODS EXPOSED TO WEATHER ON UNDERSIDE OF PIER.

SECTION 1/SS/SS

SCALE 3/4" = 1'-0"

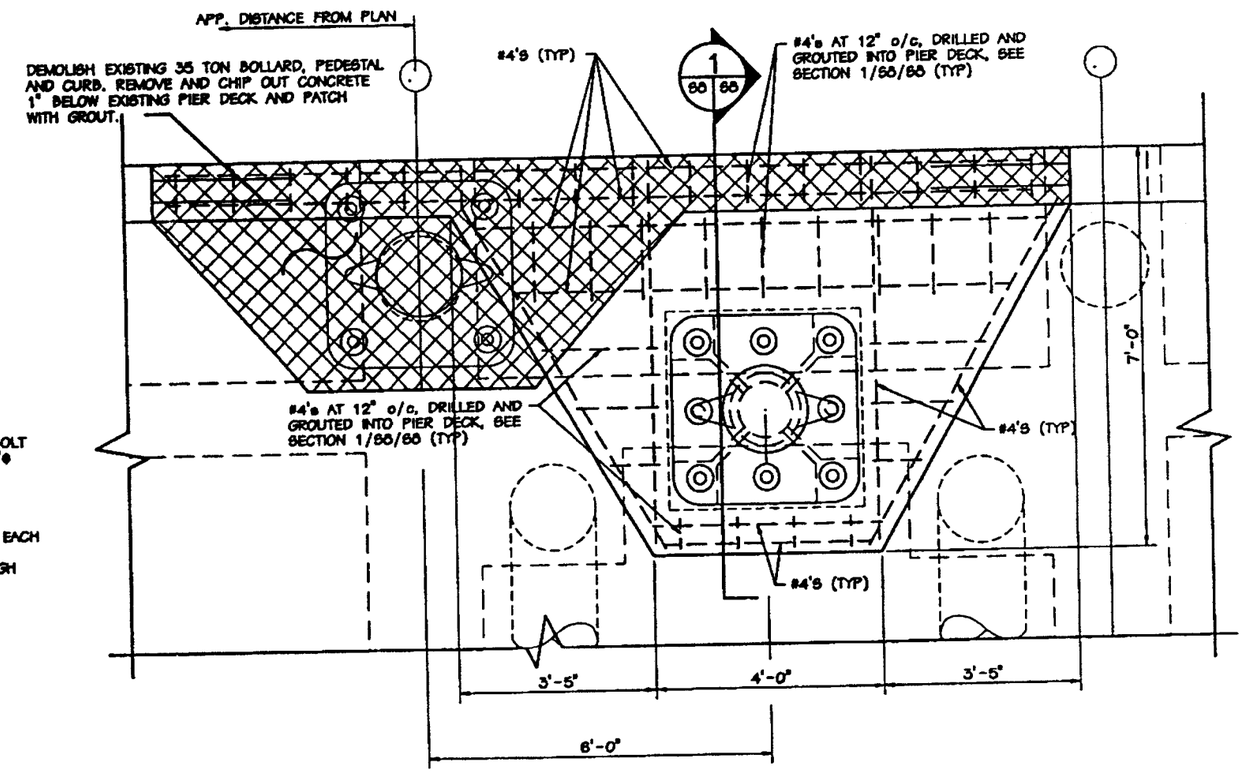

DETAIL A/SS/SS

SCALE 3/4" = 1'-0"

GRAPHIC SCALE

3/4"=1'-0" 1' 6" 0' 1' 2' 3' 4'

REVISIONS

DESIGNED & ENGINEERED BY LANTDIV NAVAL FACILITIES ENGINEERING COMMAND

DEPARTMENT OF THE NAVY — ATLANTIC DIVISION, NAVAL FACILITIES ENGINEERING COMMAND, NORFOLK, VIRGINIA

NAVAL STATION PORTSMOUTH, VIRGINIA

DFBP, CRANEY ISLAND REPAIR TO MOORING SYSTEM PIER "D"

BOLLARD REPLACEMENT

CODE IDENT. NO. 80091 SIZE D

SCALE AS NOTED

DFS NO. 417230

STA. PROJ. NO. R703/95

SPEC. NO. 05-94-4301

CONTR. CONTR. NO. N62470-94-B-4301

HISTORIC DRAWING NO. 4317230

SHEET 10 OF 12

S-8

FILENAME: BOLLARD.DWG, PLOT SCALE: 1=1, SAVED ON 07/12/95 AT 11:05, XREFS: NONE

NOTES

1. FLEXIBLE CONDUIT SHALL BE 1" STEEL (UNLESS OTHERWISE NOTED) AND HAVE AN EXTRUDED MOISTURE AND OIL PROOF PVC JACKET. FOR EACH PIECE OF FLEXIBLE CONDUIT PROVIDE 25% SLACK.
2. ALL CONDUIT SHALL BE 1" PVC COATED RIGID STEEL UNLESS OTHERWISE NOTED.
3. WIRING SHALL BE 4#10 AWG COPPER IN 1" CONDUIT TO THE LAST LIGHTING FIXTURE. WIRING FROM JUNCTION BOX TO EACH INDIVIDUAL FIXTURE SHALL BE 3#12 AWG IN 1/2" FLEXIBLE CONDUIT.
4. PHOTOCELL SHALL BE WIRED TO CONTROL ALL TYPES A, B, C LIGHTING FIXTURES.
5. ALL STEEL MOUNTING ITEMS SHALL BE HOT-DIPPED GALVANIZED AFTER FABRICATION UNLESS OTHERWISE NOTED.
6. ALL WORK SHOWN IS NEW UNLESS NOTED OTHERWISE.

LEGEND

- PHOTO CELL
- WEATHER PROOF JUNCTION BOX OR CONDUIT BODY, PVC COATED
- CATWALK STEP LIGHTING FIXTURE, 70W HPS.
- ELECTRICAL CIRCUIT IN FLEXIBLE CONDUIT
- BRANCH CIRCUIT OR FEEDER WIRING RUN IN CONDUIT. NO TICK MARKS INDICATE 2#10 CONDUCTORS & 1#10 GND. IN 1" CONDUIT U.O.N. TICK MARKS, WHEN SHOWN, INDICATE NUMBER OF #10 CONDUCTORS IF OTHER THAN THREE; (/) INDICATES GROUND.
- LIGHTING FIXTURE SYMBOL

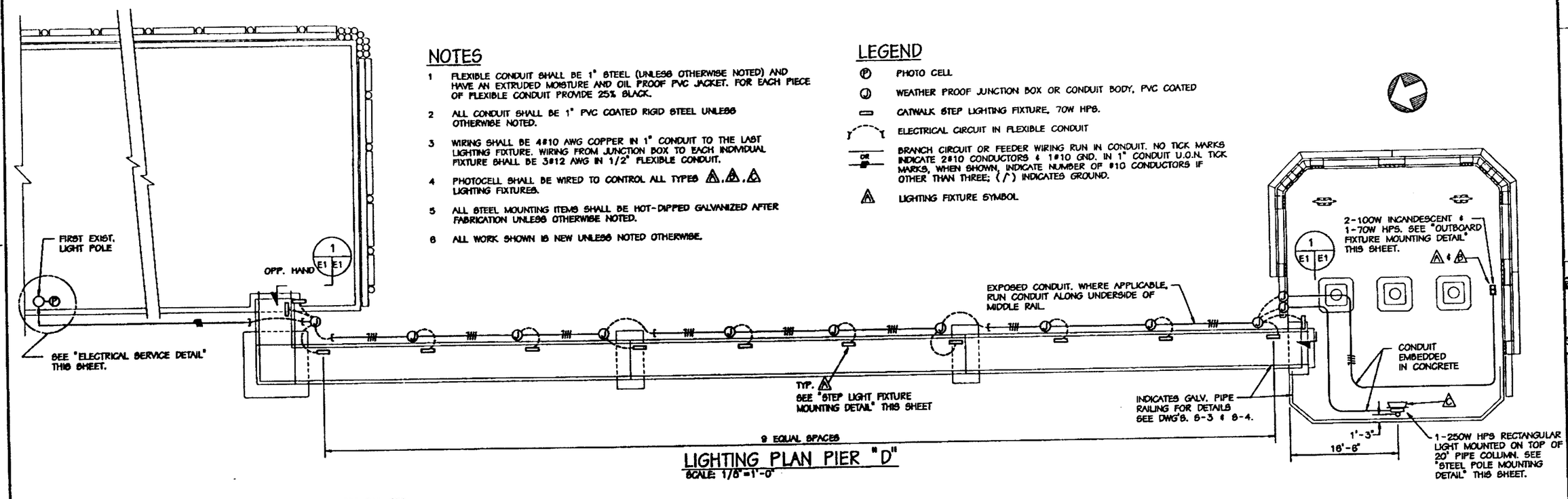

LIGHTING PLAN PIER "D"

SCALE: 1/8"=1'-0"

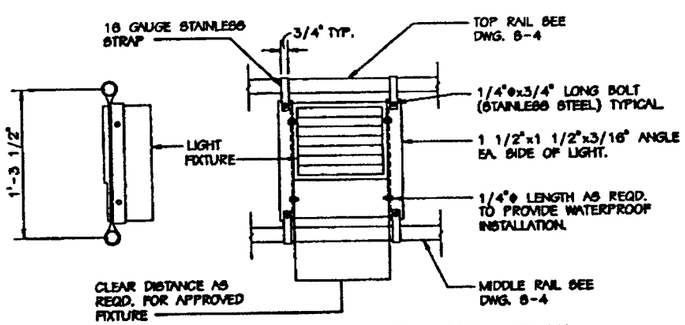

STEP LIGHT FIXTURE MOUNTING DETAIL

SCALE: 1 1/2"=1'-0"

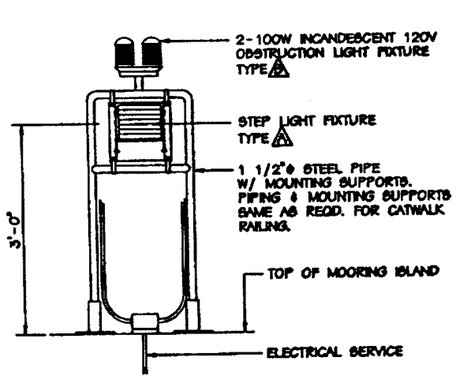

OUTBOARD FIXTURE MOUNTING DETAIL

NOT TO SCALE

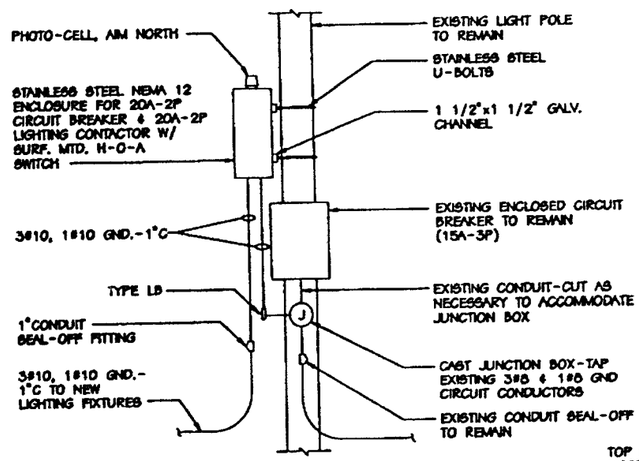

ELECTRICAL SERVICE DETAIL

NOT TO SCALE

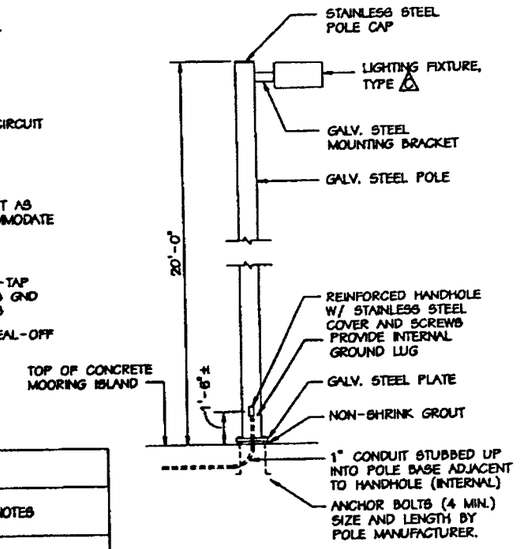

STEEL POLE MOUNTING DETAIL

NOT TO SCALE

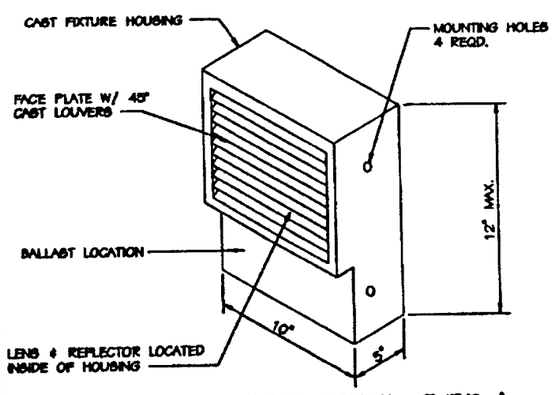

STEP LIGHT FIXTURE DETAIL-TYPE A

NOT TO SCALE

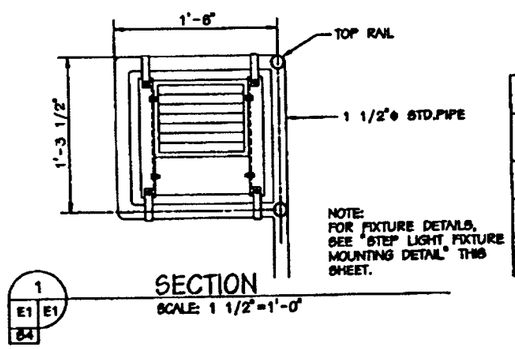

SECTION

SCALE: 1 1/2"=1'-0"

LIGHTING FIXTURE SCHEDULE

FIXTURE SYMBOL	SKETCH NO. & TYPE	NUMBER AND TYPE OF LAMPS	VOLTAGE	MOUNTING	NOTES
A	SEE DETAIL	1-70W HPS	208	SEE DETAIL	
B	NL-50	2-100W INCAND.	120	SEE DETAIL	EXTENDED LIFE LAMP
C	XL-1	1-250W HPS	208	SEE DETAIL	20' STEEL PIPE

GRAPHIC SCALE

1/8"=1'-0" 0' 5' 10' 20' 30'

1-1/2"=1'-0" 1' 9" 6" 3" 0' 1' 2'

REVISIONS

DESCRIPTION	DATE	APPROVED

DESIGNED & ENGINEERED BY: LANTDIV NAVAL FACILITIES ENGINEERING COMMAND

ACTIVITY - SATISFACTORY TO

ATLANTIC DIVISION NAVAL FACILITIES ENGINEERING COMMAND NORFOLK, VIRGINIA

DEPARTMENT OF THE NAVY NAVAL STATION PORTSMOUTH, VA

DFS&P, CRANEY ISLAND REPAIR TO MOORING SYSTEM PIER "D"

LIGHTING PLAN AND DETAILS

CODE ID. NO. 80091 SIZE D

SCALE AS NOTED

SHIP NO. 417231

STA. FIELD NO. R703-95

SPEC. NO. 05-94-4301

CONTR. CONTR. NO. N62470-94-B-4301

DRAWING DRAWING NO. 4317231

SHEET 11 OF 12

E-1

FILENAME: E1.DWG, PLOT SCALE: 1=1, SAVED ON 07/14/95 AT 10:00, XREFS: NONE

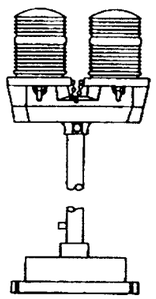

LUMINAIRE REQUIREMENTS

1. LUMINAIRE SHALL MEET FEDERAL AVIATION ADMINISTRATION SPECIFICATIONS FOR OBSTRUCTION LIGHTING (L-810).
2. CAST ALUMINUM HOUSING.
3. ONE PIECE 360° RED HEAT RESISTANT GLASS FRESNEL GLOBE. PROVIDE TOGGLE TYPE LATCHES AND CLAMPING TO SECURE GLOBES. PROVIDE SAFETY CHAINS ON GLOBES.
4. MOUNT PHOTO ELECTRIC CONTROL TO CONTROL LAMPS.
5. MOUNT LUMINAIRE ON 1" RIGID STEEL CONDUIT. PROVIDE JUNCTION BOX AND MOUNTING PLATE AT BASE UNLESS INDICATED OTHERWISE.
6. LAMPS SHALL BE RATED 100 WATT 130 VOLT. MULTIPLE, MEDIUM BASE. TWO LAMPS ARE REQUIRED.
7. PROVIDE INTERNAL GREEN GROUNDING SCREW.

OBSTRUCTION LIGHT

SKETCH DATE	MAY 1994	STYLE	NL-50

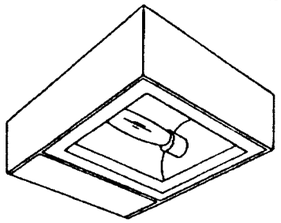

NOTE:
DISTRIBUTION SHALL BE AS INDICATED AND SHALL BE IN ACCORDANCE WITH I.E.S. DEFINITIONS.

LUMINAIRE REQUIREMENTS

1. HOUSING, DIE CAST ALUMINUM OR EXTRUDED OR FORMED ALUMINUM, WITH SEALED AND WELDED SEAMS.
2. REFLECTOR - FORMED ANODIZED ALUMINUM.
3. LENS - TEMPERED, IMPACT RESISTANT CLEAR GLASS.
4. LENS DOOR - HINGED ALUMINUM WITH GASKET, CAPTIVE SCREW OR LATCHES.
5. INTEGRAL MULTI-TAP BALLAST.
6. CONCEALED MOUNTING HARDWARE (ALL HARDWARE CORROSION RESISTANT).
7. PORCELAIN SOCKET WITH VIBRATION-PROOF LAMP GRIP SHELL.
8. FINISH - DARK BRONZE, BAKED ENAMEL, OR POLYESTER POWDER FINISH, EXCEPT AS INDICATED.
9. SLIPFITTER 2-3/8" TO 3" O.D. OR MOUNTING ARM.
10. LAMP 70 TO 1000 WATT, HIGH-PRESSURE SODIUM, WATTAGE AS INDICATED.
11. LAMP STABILIZER, 1000 WATT SIZE ONLY.
12. UL LISTED - SUITABLE FOR OUTDOOR WET LOCATION.
13. "HOUSE SIDE OR REAR SPILL" LIGHT SHALL BE LIMITED TO 20%, WHEN INDICATED.
14. PHOTOCELL WHEN INDICATED.

MAX. E.P.A. 3.0 SQ. FT.

ROADWAY AND AREA LIGHT

SKETCH DATE	MAY 1995	STYLE	XL-1

REVISIONS

DESIGNED & ENGINEERED BY: LANTDIV NAVAL FACILITIES ENGINEERING COMMAND

ACTIVITY - SATISFACTORY TO

DEPARTMENT OF THE NAVY
NAVAL STATION
ATLANTIC DIVISION
NAVAL FACILITIES ENGINEERING COMMAND
NORFOLK, VIRGINIA

DFSP, CRANEY ISLAND
PORTSMOUTH, VA
REPAIR TO MOORING SYSTEM
PIER "D"

LIGHTING SKETCHES

SCALE: AS NOTED
DWG NO. 417232
DWG. PROJ. NO. R703-95
SPEC. NO. 05-94-4301
CONTR. CONTR. NO. N62470-94-B-4301
MAPPING DRAWING NO. 4317232
SHEET 12 OF 12

E-2

FILENAME: E2.DWG, PLOT SCALE: 1=1, SAVED ON 07/13/95 AT 10:10, XREFS: NONE

DIAGRAM OF DATUM PLANE

CRANEY ISLAND; PORTSMOUTH, VA VERTICAL CONTROL

GRAPHIC SCALE

1" = 100'

100' 0 100' 200'

HYDROGRAPHIC NOTES

1. SOUNDINGS ARE IN FEET AND TENTHS AND ARE REFERRED TO THE STATION LOW WATER DATUM, WHICH IS 2.13 FEET BELOW NATIONAL GEODETIC VERTICAL DATUM OF 1929 (1972 ADJUSTMENT).
2. THE HYDROGRAPHIC SURVEY WAS CONDUCTED USING CLASS 1 HYDROGRAPHIC SURVEY METHODS AND ACCURACIES OUTLINED IN THE CORPS OF ENGINEERS' HYDROGRAPHIC SURVEYING MANUAL (EM 1110-2-1003).
3. ALL SOUNDINGS WERE TAKEN BY SURVEY DEPTH RECORDER (ODOM FATHOMETER) AND LOCATED WITH GLOBAL POSITIONING SYSTEM (STARLINK BEACON RECEIVER).
4. HORIZONTAL DATUM IS BASED ON THE VIRGINIA SOUTH (LAMBERT) STATE PLANE COORDINATE SYSTEM, ZONE 4502, U.S. SURVEY FEET (NAD 1983).
5. PARALLEL SURVEY LINES ARE RUN AT 100' INTERVALS FOR CONDITION SURVEYS AND AT 50' INTERVALS FOR BEFORE AND AFTER DREDGE SURVEYS. SOUNDINGS OCCUR APPROXIMATELY EVERY 20' ALONG EACH PARALLEL LINE.
6. SURVEY DATES: 02/17/2010, 04/29/2010

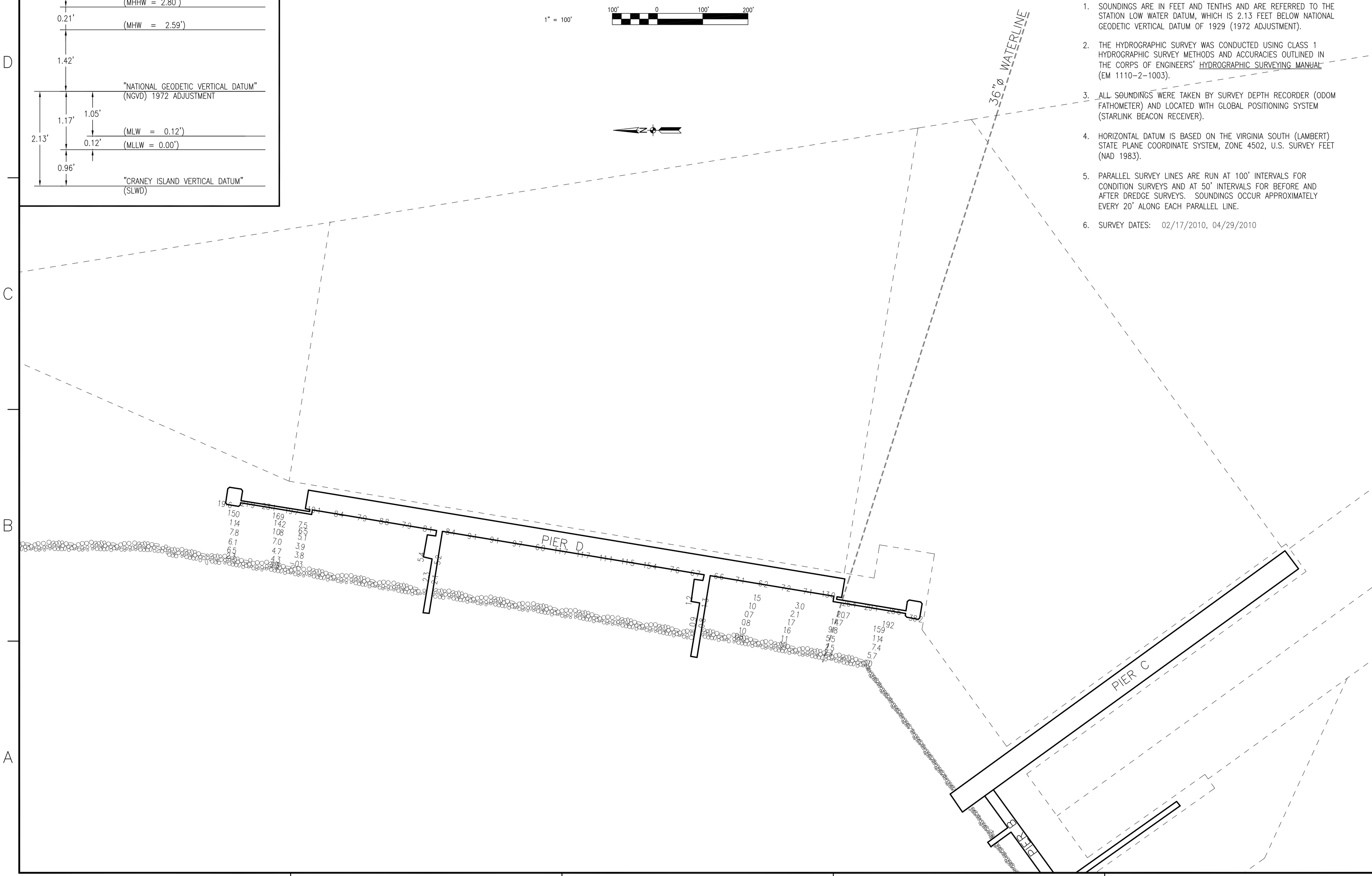

SYM	DESCRIPTION	DATE	APPR

NAVFAC

PRELIMINARY NOT FOR CONSTRUCTION

APPROVED

FOR COMMANDER NAVFAC

APPROVED XXXXX

ACTIVITY - SATISFACTORY TO DATE DD/MM/YY

PM/DM XXX

DES TLB DRW EAH CHK GLP

FIRE PROTECTION N/A

BRANCH MANAGER TF

CHIEF ENG/ARCH XXX

DEPARTMENT OF THE NAVY
NAVAL FACILITIES ENGINEERING COMMAND
CI CORE (HYDRO) ~ PWD NORFOLK
NAVAL FACILITIES ENGINEERING COMMAND
NAVAL STATION - NORFOLK, VIRGINIA

CRANEY ISLAND

PORTSMOUTH, VIRGINIA

FY10 CONDITION SURVEY
CRANEY ISLAND

PIER D (IINBOARD)

CODE ID. NO. 80091 SIZE D

SCALE: AS NOTED

MAXIMO NO. ########

JOB ORDER NO. #-###

WORK ORDER NO. ##-##-####

CONSTR. CONTR. NO. #####-##-#-####

NAVFAC DRAWING NO. XX,XXX,XXX

SHEET 1 OF ##

X-XXX

DRAWFORM REVISION: 6 AUG 2007

FILE NAME: P:\Craney Island\Dredging\FY10_Pier D\Phase B - Design\Drawings\FY10_PIER_D.dwg LAYOUT NAME: Pier D PLOTTED: Friday, April 30, 2010 - 1:58pm USER: tommy.burritt

REVISIONS			
SYM	DESCRIPTION	DATE	SATISFACTORY	APPROVED BY

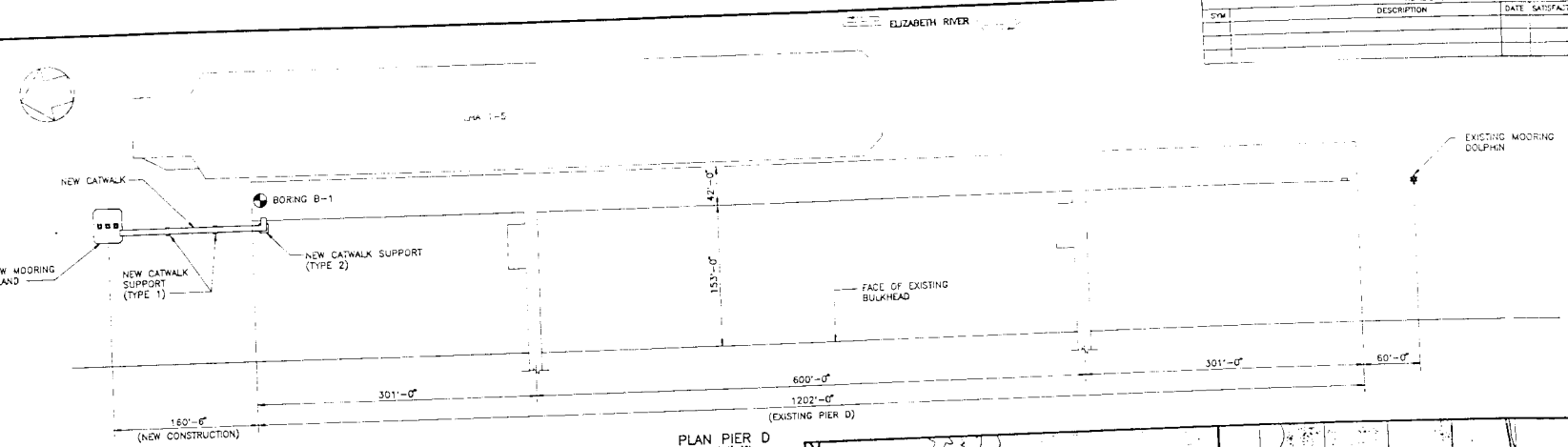

PLAN PIER D
SCALE 1"=60'

GENERAL NOTES:

1 DESIGN VESSEL CHARACTERISTICS:

	LHA 1-5	MPS	AOE 1-4
CLASS			
LENGTH (OVERALL)	820'	821'	796'
BEAM (MAXIMUM)	118'	105.5'	107'
DRAFT (MAXIMUM)	26'	33.6'	41'
DISPLACEMENT (MAXIMUM)	39,400 LG. TN.	52,000 LG. TN.	53,600 LG. TN.
WIND PRESENTMENT AREAS (LIGHT)			
SIDE	70,750 S.F.	73,080 S.F.	54,600 S.F.
END	11,500 S.F.	11,710 S.F.	8,850 S.F.

2 DESIGN MOORING CONDITIONS:
- WIND VELOCITY: 64 KNOTS
- CURRENT: 0.8 KNOTS
- SEISMIC: ZONE 1

3 DESIGN LIVE LOADS:
- MOORING ISLAND
  - LATERAL: 584 KIPS
  - LONGITUDINAL: 242 KIPS
  - UNIFORM VERTICAL: 250 P.S.F.
- BOLLARDS
  - HORIZONTAL: 268 KIPS
  - INCLINED: 248 KIPS @ 45° UPLIFT
- CATWALK: 100 P.S.F.
- PILE BEARING CAPACITY: 100 TONS (COMPRESSION), 50 TONS (TENSION)

4 DESIGN CODES:
- GENERAL: NAVFAC DM-2, DM-7, DM-25, DM-26
- CONCRETE: ACI 318-89
- STRUCTURAL STEEL: AISC, 9th EDITION

5 MATERIALS:
- CONCRETE (AIR ENTRAINED)
  - CAST-IN-PLACE: 4000 P.S.I. @ 28 DAYS
  - PRECAST, PRESTRESSED: 5000 P.S.I. @ 28 DAYS
- REINFORCING STEEL
  - DEFORMED BARS: ASTM A615 GRADE 60
  - PRESTRESSING STEEL: ASTM A416
- STEEL
  - SHAPES, PLATES, BARS: ASTM A36
  - STRUCTURAL PIPE: ASTM A53, TYPE S
  - THREADED FASTENERS: ASTM A449
  - BOLLARDS AND CLEATS: ASTM A307
  - OTHER
- TIMBER
  - FENDER PILES: DOUGLAS FIR OR SOUTHERN YELLOW PINE (TIP ELEV. =-60.0)

6 TIMBER PILES, WALES, CHOCKS AND BLOCKING SHALL BE PRESSURE TREATED IN ACCORDANCE WITH AWPA C1; AWPA C3 (PILES) AND AWPA C18 (MARINE TIMBERS).

7 CONTRACTOR SHALL FIELD VERIFY ALL DIMENSIONS, ELEVATIONS, ETC. NECESSARY FOR PROPER MATING OF NEW TO EXISTING CONSTRUCTION.

8 CONCRETE COVER FOR REINFORCING SHALL BE AS INDICATED. WHERE COVER IS NOT SHOWN, PROVISIONS OF ACI 318-89 SHALL APPLY.

9 ALL REINFORCING STEEL SHALL BE HELD SECURELY IN PLACE TO PREVENT DISLOCATION DURING THE POURING OPERATION.

10 PROVIDE 3/4" CHAMFER ON ALL EXPOSED CONCRETE CORNERS

11 NO CONCRETE SHALL BE POURED UNTIL ALL EMBEDDED WORK HAS BEEN INSTALLED, TESTED, AND INSPECTED.

12 ALL STEEL FASTENERS, PIECES, AND ASSEMBLED FABRICATIONS SHALL BE HOT-DIPPED GALVANIZED.

13 REINFORCING STEEL MARKED CONTINUOUS (CONT.) SHALL BE LAPPED 48 BAR DIAMETERS AT SPLICES. ALL MILD STEEL REINFORCING SHALL BE FUSION BONDED EPOXY COATED AFTER FABRICATION.

14 ALL PILING SUPPORTING THE MOORING ISLAND AND CATWALK SHALL BE 24" SQ. PRESTRESSED CONCRETE PILES. PILES SHALL BE DRIVEN TO A MINIMUM TIP ELEVATION OF -109.00 UNLESS OTHERWISE DIRECTED. THE TIP ELEVATION MAY BE LOWERED BASED UPON THE FINAL RESULT OF TEST PILE DRIVING AND LOAD TESTING. TEST PILES SHALL BE FURNISHED 10' LONGER THEN THE LENGTH REQUIRED FOR THE INDICATED TIP ELEVATION.

15 PROVIDE AND INSTALL STANDARD PRECAST/PRESTRESSED CONCRETE DOUBLE TEES FACTORY MODIFIED TO 6'-0" WIDE AND 2'-11" HIGH (INCLUDES 5" THICK FLANGE SLAB). PROVIDE DESIGN AND DETAILS OF ALL PRESTRESSED AND MILD STEEL REINFORCING FOR APPROVAL WITH SHOP DRAWINGS.

16 THE EXISTING PIER IS A FUELING FACILITY AND SHALL REMAIN IN FULL OPERATION DURING CONSTRUCTION. CONSTRUCTION OPERATIONS SHALL NOT BLOCK VESSEL ACCESS TO THE PIER AT ANY TIME. PRIOR TO PERFORMING ANY WELDING OR TORCH CUTTING IN THE IMMEDIATE VICINITY OF THE FUELING PIER, CONTRACTOR SHALL REQUEST CLEARANCE FROM THE FUELING DEPOT AND PROVIDE A MINIMUM 2 WEEK NOTICE TO THE CONTRACTING OFFICER.

GRAPHIC SCALES
1"=60' 0 30' 60' 120' 180'

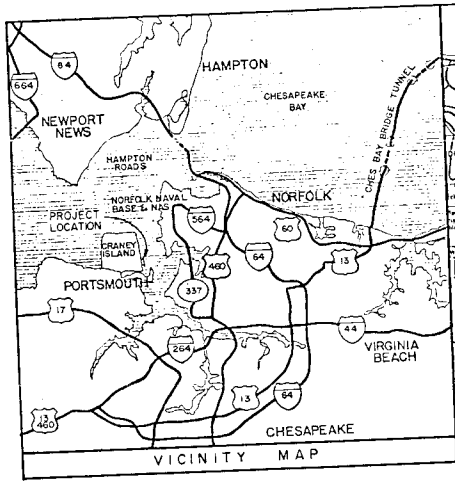

VICINITY MAP

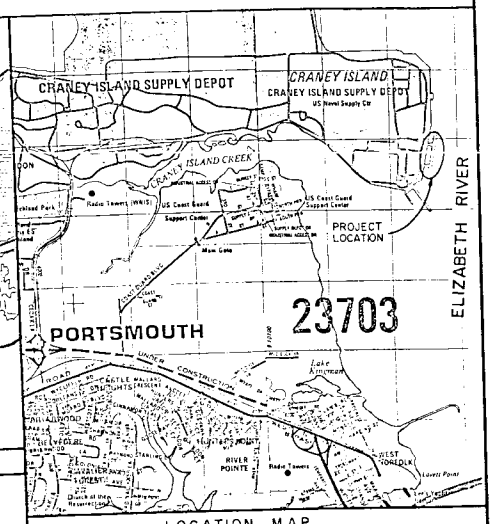

LOCATION MAP

S-1

REID & CORNWELL, Ltd. Consulting Structural Engineers, 2 Lynnhaven Executive Park, Virginia Beach, Va. 23452	DEPARTMENT OF THE NAVY — NAVAL FACILITIES ENGINEERING COMMAND — NAVY PUBLIC WORKS CENTER, NAVAL STATION, NORFOLK, VIRGINIA
JOB ORDER NO. 1620182	CRANEY ISLAND, PORTSMOUTH, VIRGINIA
DES. JES / DR. BBB / CHK. CJR	REPAIR PIER D MOORING SYSTEM
BR. MGR. E. L. THEISZ	
SUBMITTED BY: FIRM MEMBER / PRINCIPAL	
EIC E. L. THEISZ	MOORING ISLAND LAYOUT & DESIGN CRITERIA
DIV. DIR. R. H. IVES JR.	
APPROVED: DATE: 3/18/92	SIZE: D; CODE ID NO.: 80091; NAVFAC DRAWING NO.: 4,242,502; PWC DRAWING NO.: 14,184
SATISFACTORY TO ACTIVITY	CONSTR. CONTR. NO. N62470-90-C-4729
APPROVED: DATE:	SCALE: GRAPHIC; SPEC. 05-90-4729; SHEET 1 OF 8
FOR P.W. COMMANDER, NAVFAC	

COMMONWEALTH OF VIRGINIA — CHARLES J. REID No. 6734 — 4-24-92 — PROFESSIONAL ENGINEER

Pier D North Dolphin 1993

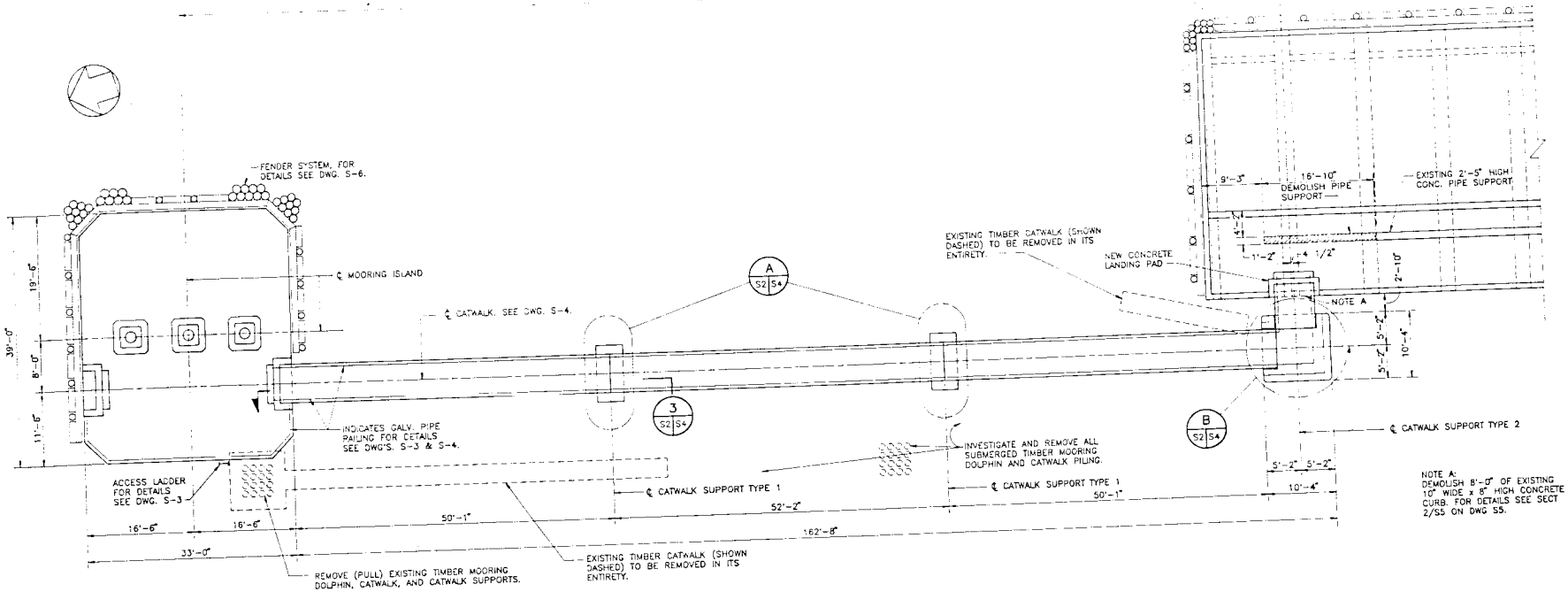

NOTE A:
DEMOLISH 8'-0" OF EXISTING 10" WIDE x 8" HIGH CONCRETE CURB. FOR DETAILS SEE SECT 2/S5 ON DWG S5.

PLAN PIER D MOORING ISLAND AND CATWALK
SCALE: 1/8"=1'-0"

GRAPHIC SCALES
1/8"=1'-0" 0 5' 10' 20' 30'

REVISIONS				
SYM	DESCRIPTION	DATE	SATISFACTORY	APPROVED BY

S-2

REID & CORNWELL, Ltd.
Consulting Structural Engineers
2 Lynnhaven Executive Park
Virginia Beach, Va. 23452

JOB ORDER NO. 1620182
DES. JES | DR. BBB | CHK. CJR
BR. MGR. E. L. THEISZ
SUBMITTED BY:
FIRM MEMBER / PRINCIPAL
EIC E. L. THEISZ
DIV. DIR. R. H. IVES JR.
APPROVED: DATE: 12/12/92
SATISFACTORY TO ACTIVITY
APPROVED: DATE:
FOR C.O. COMMANDER, NAVFAC

COMMONWEALTH OF VIRGINIA
CHARLES L. ROD
No. 6751
PROFESSIONAL ENGINEER
4-24-92

DEPARTMENT OF THE NAVY — NAVAL FACILITIES ENGINEERING COMMAND
NAVY PUBLIC WORKS CENTER
NAVAL STATION — NORFOLK, VIRGINIA

CRANEY ISLAND, PORTSMOUTH, VIRGINIA

REPAIR PIER D MOORING SYSTEM

MOORING ISLAND & CATWALK PLAN

SIZE	CODE ID NO.	NAVFAC DRAWING NO.	PWC DRAWING NO.
D	80091	4,242,503	14,184A

CONSTR. CONTR. NO. N62470-90-C-4729
SCALE: GRAPHIC | SPEC. 05-90-4729 | SHEET 2 OF 8

SYM	REVISIONS DESCRIPTION	DATE	SATISFACTORY	APPROVED BY

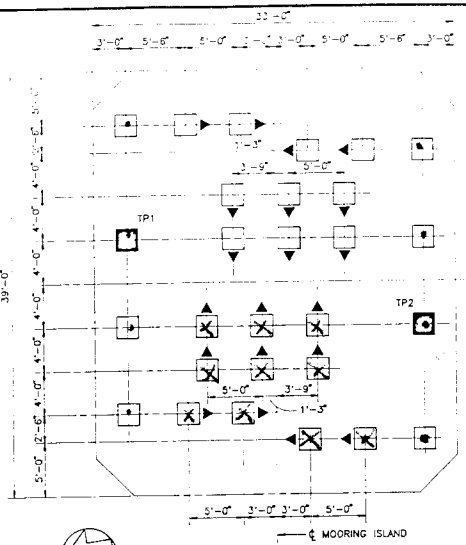

MOORING ISLAND PILE PLAN
SCALE 3/16"=1'-0"

NOTE:
TP1 AND TP2 DENOTE DRIVING TEST PILE LOCATIONS. CONTRACTING OFFICER SHALL SELECT ONE TEST PILE FOR A LOAD TEST.

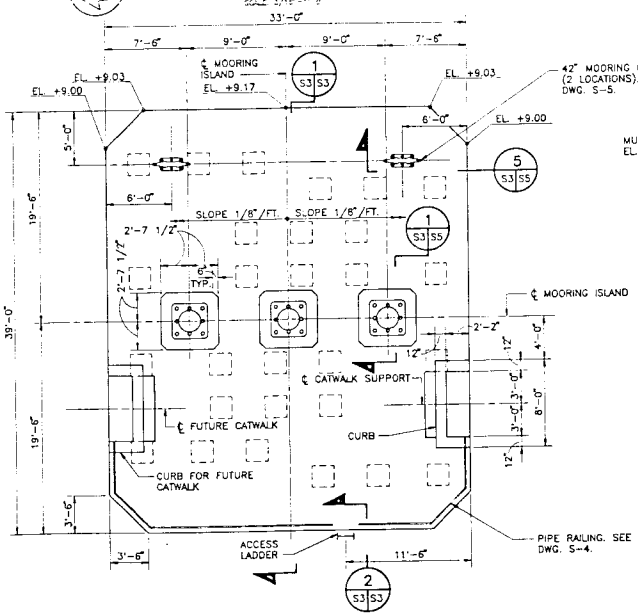

MOORING ISLAND DECK PLAN
SCALE 3/16"=1'-0"

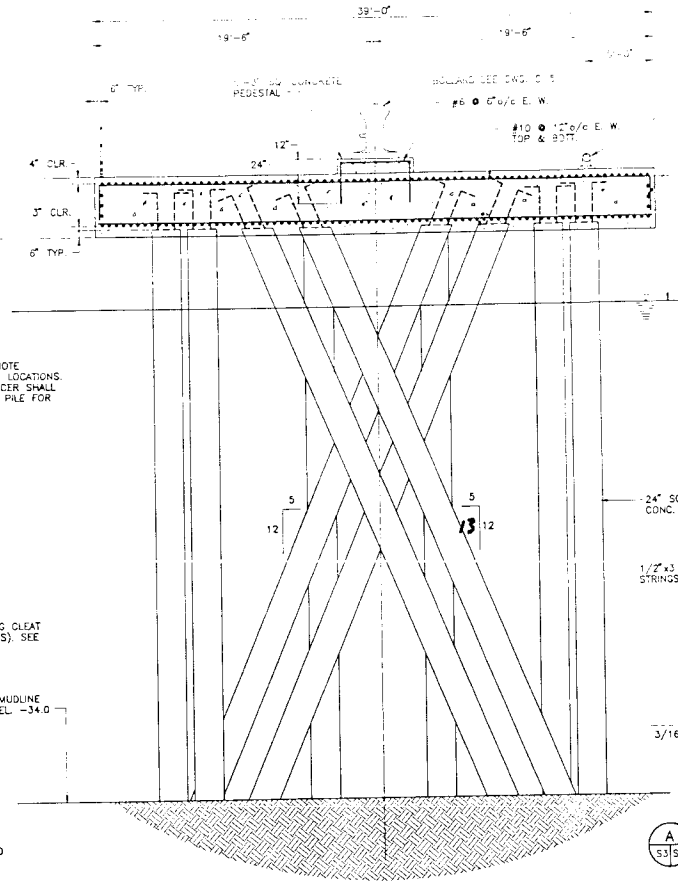

1 S3|S3 SECTION
SCALE 1/4"=1'-0"

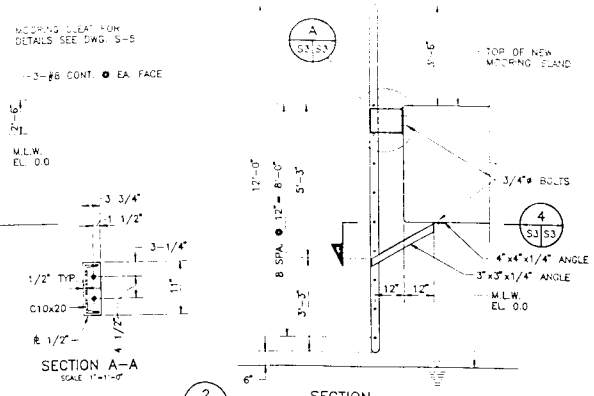

2 S3|S3 SECTION
SCALE 1/2"=1'-0"

SECTION A-A
SCALE 1"=1'-0"

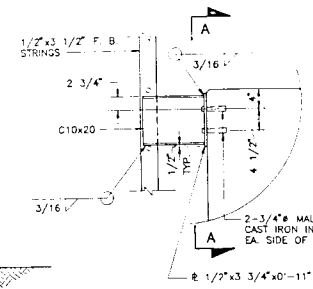

A S3|S3 DETAIL
SCALE 1"=1'-0"

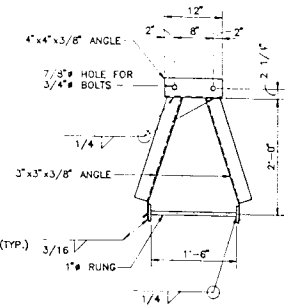

4 S3|S3 SECTION
SCALE 1"=1'-0"

GRAPHIC SCALES

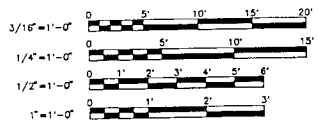

COMMONWEALTH OF VIRGINIA
CHARLES J. REID
No. 6751
4-24-92
PROFESSIONAL ENGINEER

S-3

REID & CORNWELL, Ltd. Consulting Structural Engineers 3 Lynnhaven Executive Park Virginia Beach, Va. 23452	DEPARTMENT OF THE NAVY NAVAL FACILITIES ENGINEERING COMMAND NAVY PUBLIC WORKS CENTER NAVAL STATION NORFOLK, VIRGINIA	
JOB ORDER NO. 1620182	CRANEY ISLAND, PORTSMOUTH, VIRGINIA	
DES. JES DR. BBB CHK. CJR	REPAIR PIER D MOORING SYSTEM	
BR. MGR. E. L. THOSZ		
SUBMITTED BY: Vice President		
FIRM MEMBER: / PRINCIPAL		
EIC E. L. THOSZ	MOORING ISLAND PLAN & DETAILS	
DIV. DIR. R. H. WES JR.		
APPROVED: DATE: 12/11/92	SIZE D / CODE ID NO. 80091 / NAVFAC DRAWING NO. 4,242,504 / PWC DRAWING NO. 14,184B	
SATISFACTORY TO ACTIVITY		
APPROVED: DATE:	CONSTR. CONTR. NO. N62470-90-C-4729	
FOR C.O. COMMANDER, NAVFAC	SCALE: GRAPHIC / SPEC. 05-90-4729 / SHEET 3 OF 8	

REVISIONS				
SYM	DESCRIPTION	DATE	SATISFACTORY	APPROVED BY

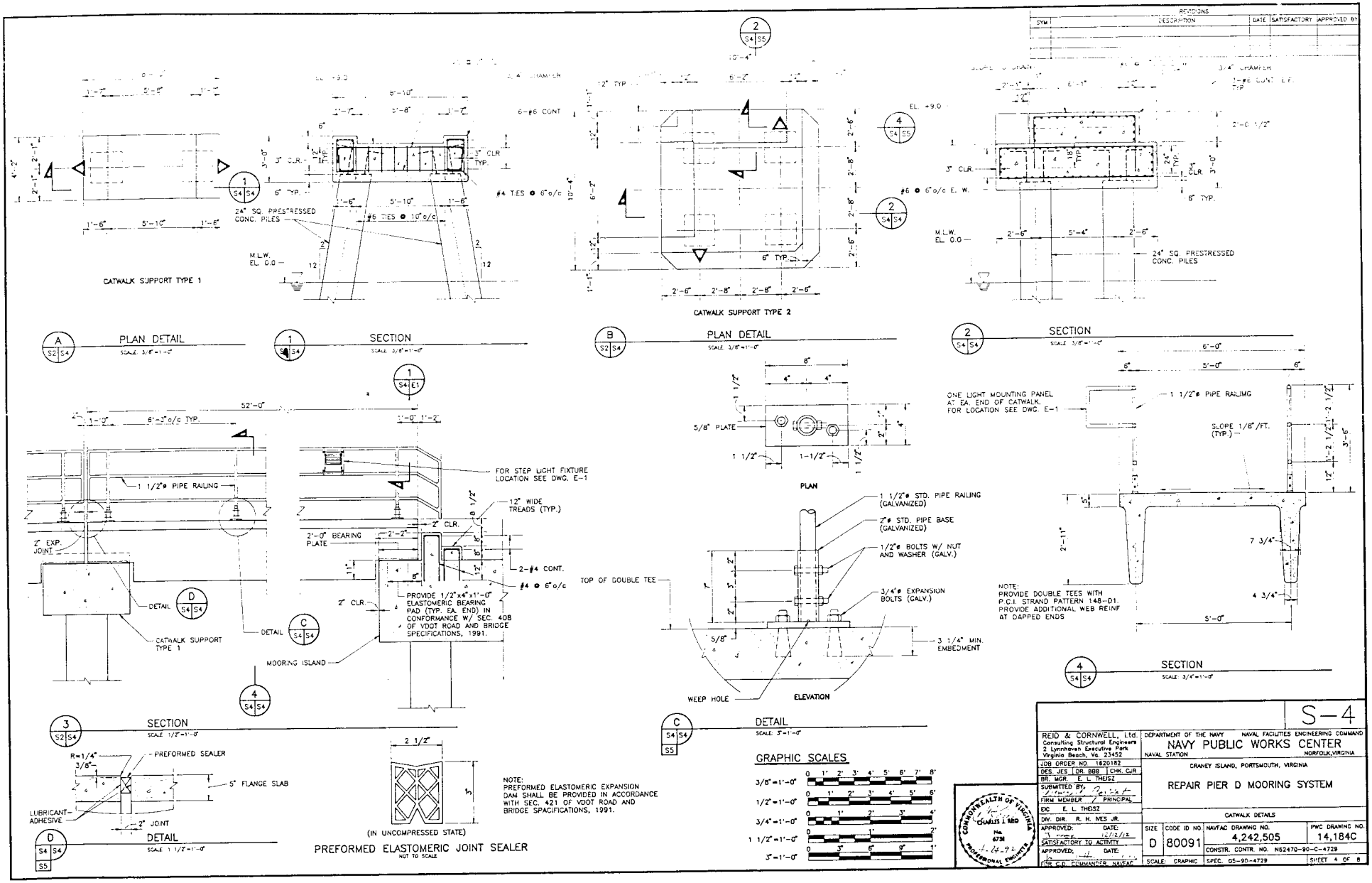

S-4

REID & CORNWELL, Ltd. Consulting Structural Engineers 2 Lynnhaven Executive Park Virginia Beach, Va. 23452	DEPARTMENT OF THE NAVY NAVAL FACILITIES ENGINEERING COMMAND
JOB ORDER NO. 1620182	NAVY PUBLIC WORKS CENTER
DES. JES | DR. BBB | CHK. CJR	NAVAL STATION NORFOLK, VIRGINIA
BR. MGR. E. L. THEISZ	CRANEY ISLAND, PORTSMOUTH, VIRGINIA
SUBMITTED BY: FIRM MEMBER / PRINCIPAL	REPAIR PIER D MOORING SYSTEM
EIC E. L. THEISZ	CATWALK DETAILS
DIV. DIR. R. H. IVES JR.	
APPROVED: DATE: 12/12/92 SATISFACTORY TO ACTIVITY	SIZE D · CODE ID NO. 80091 · NAVFAC DRAWING NO. 4,242,505 · PWC DRAWING NO. 14,184C
APPROVED: DATE: 1-24-93 CDR C.O. COMMANDER, NAVFAC	CONSTR. CONTR. NO. N62470-90-C-4729
	SCALE: GRAPHIC · SPEC. 05-90-4729 · SHEET 4 OF 8

SYM	DESCRIPTION	DATE	SATISFACTORY	APPROVED BY

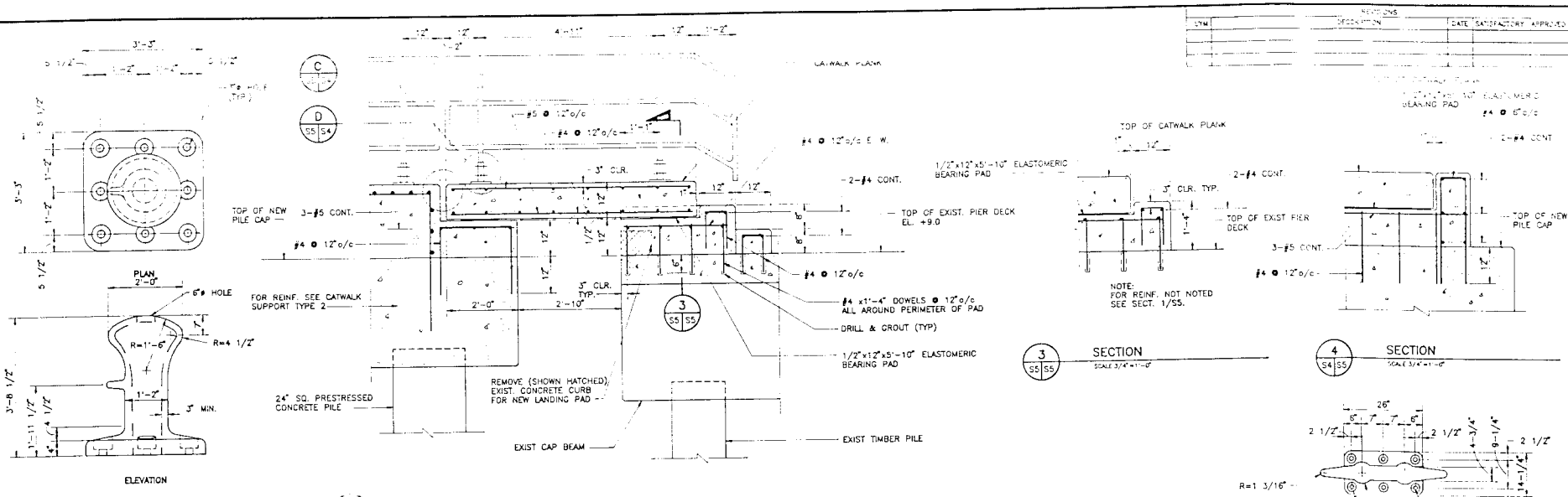

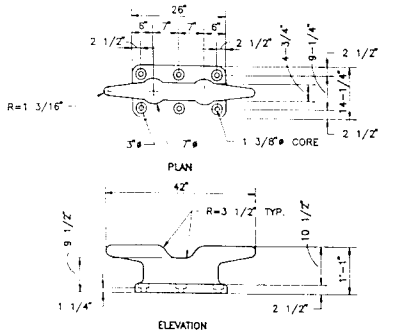

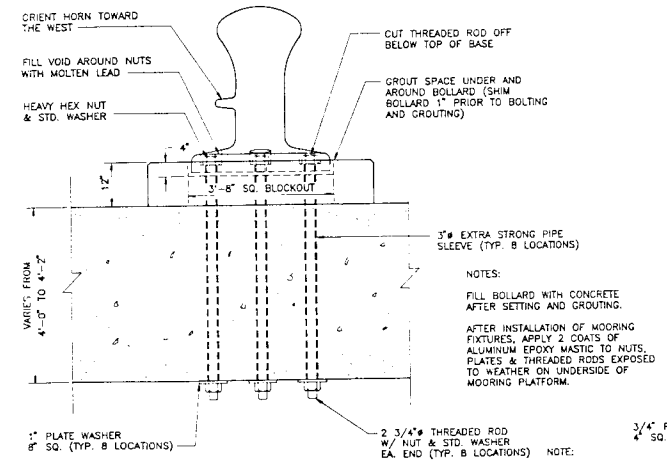

NOTES:

FILL BOLLARD WITH CONCRETE AFTER SETTING AND GROUTING.

AFTER INSTALLATION OF MOORING FIXTURES, APPLY 2 COATS OF ALUMINUM EPOXY MASTIC TO NUTS, PLATES & THREADED RODS EXPOSED TO WEATHER ON UNDERSIDE OF MOORING PLATFORM.

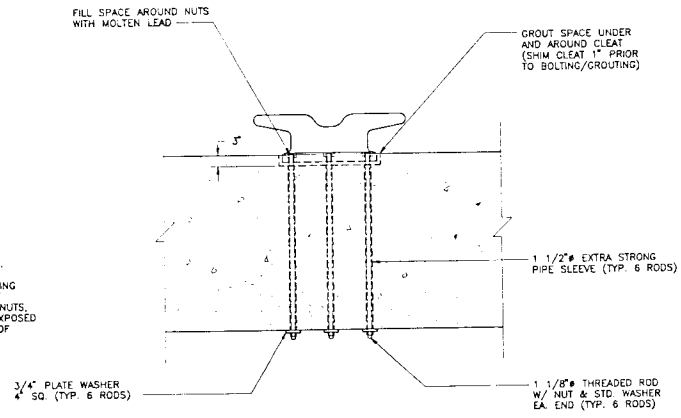

GRAPHIC SCALES

3/4"=1'-0" 0 1' 2' 3' 4'

S-5

REID & CORNWELL, Ltd. Consulting Structural Engineers 2 Lynnhaven Executive Park Virginia Beach, Va. 23452	DEPARTMENT OF THE NAVY NAVAL FACILITIES ENGINEERING COMMAND NAVY PUBLIC WORKS CENTER NAVAL STATION NORFOLK, VIRGINIA
JOB ORDER NO. 1620182	CRANEY ISLAND, PORTSMOUTH, VIRGINIA
DES. JES / DR. BBB / CHK. CJP	REPAIR PIER D MOORING SYSTEM
BR. MGR. E. L. THEISZ	
SUBMITTED BY:	
FIRM MEMBER / PRINCIPAL	
EIC E. L. THEISZ	
DIV. DIR. R. H. MES JR.	BOLLARD AND CATWALK DETAILS
APPROVED: DATE: 2/12/92	SIZE D / CODE ID NO. 80091 / NAVFAC DRAWING NO. 4,242,506 / PWC DRAWING NO. 14,184D
SATISFACTORY TO ACTIVITY	
APPROVED: DATE:	CONSTR. CONTR. NO. N62470-90-C-4729
FOR C.O. COMMANDER, NAVAL	SCALE: GRAPHIC / SPEC. 05-90-4729 / SHEET 5 OF 8

COMMONWEALTH OF VIRGINIA CHARLES J. ROD No. 6751 PROFESSIONAL ENGINEER 4-24-92

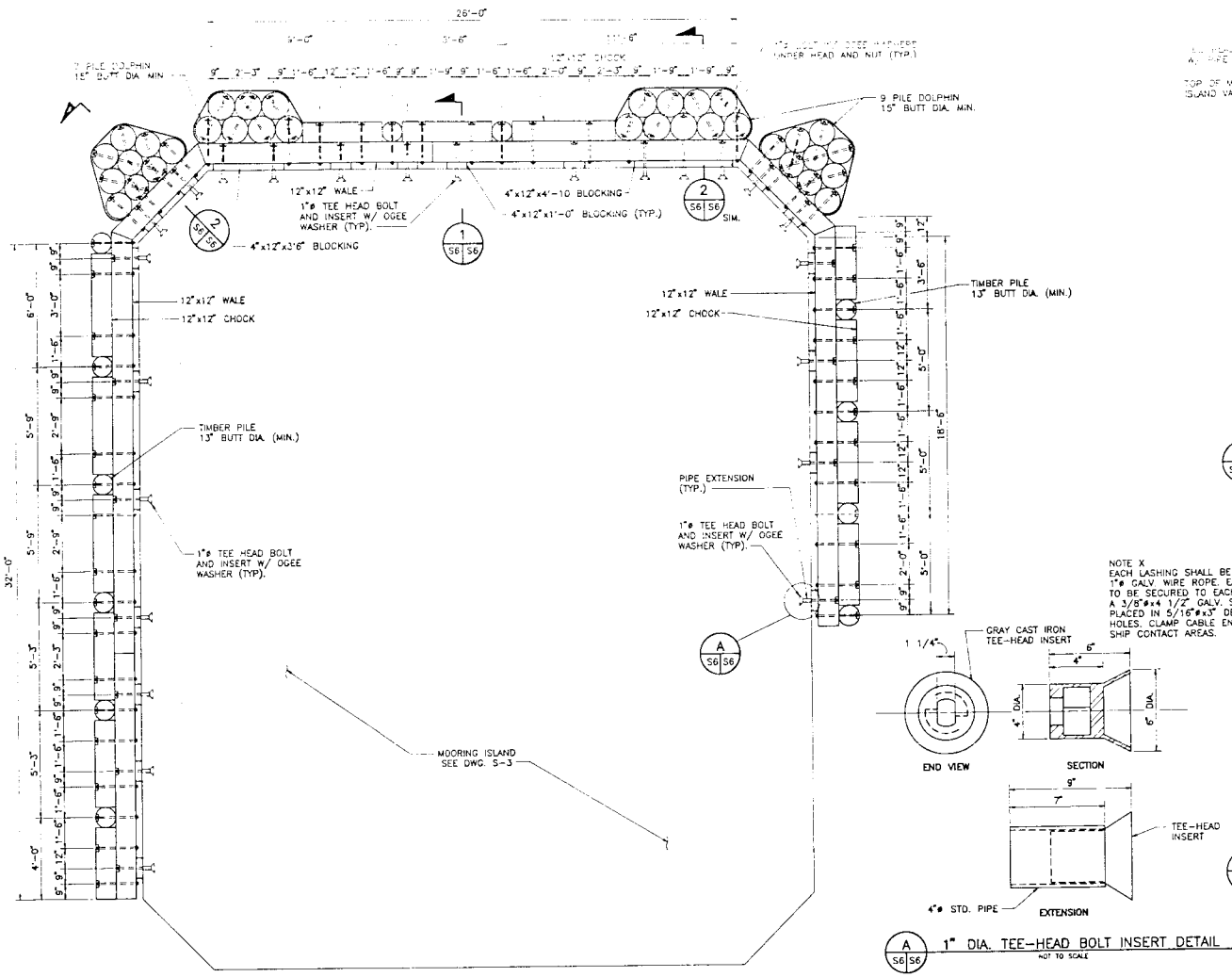

FENDER SYSTEM PLAN
SCALE: 3/8"=1'-0"

NOTE X
EACH LASHING SHALL BE 9 TURNS OF 1"ø GALV. WIRE ROPE. EACH TURN TO BE SECURED TO EACH PILE W/ A 3/8"øx4 1/2" GALV. STEEL STAPLE PLACED IN 5/16"øx3" DEEP PREBORED HOLES. CLAMP CABLE ENDS AWAY FROM SHIP CONTACT AREAS.

A S6 S6 1" DIA. TEE-HEAD BOLT INSERT DETAIL
NOT TO SCALE

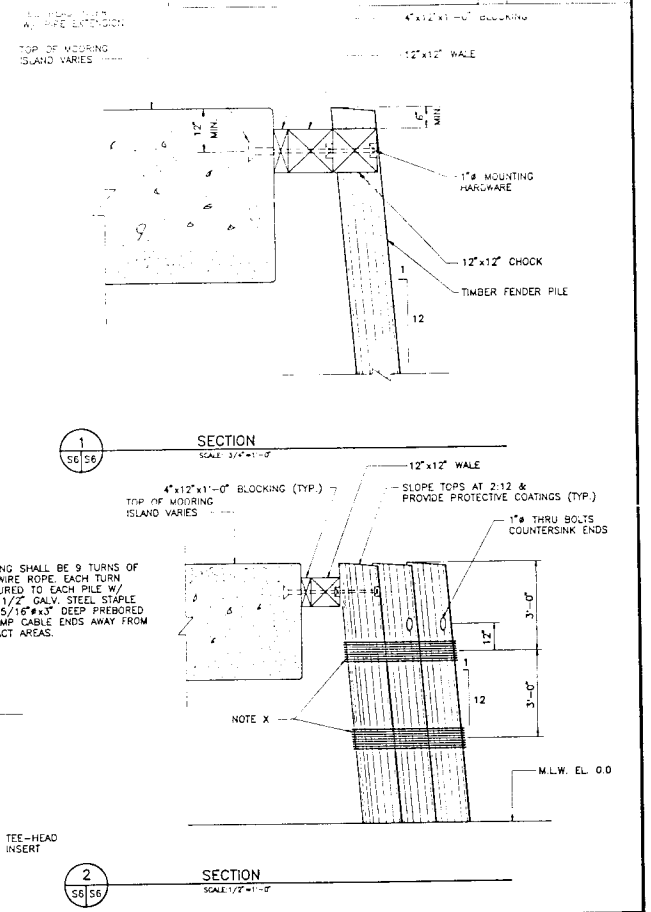

1 S6 S6 SECTION
SCALE: 3/4"=1'-0"

2 S6 S6 SECTION
SCALE: 1/2"=1'-0"

GRAPHIC SCALES
3/8"=1'-0" 0 1' 2' 3' 4' 5' 6' 7' 8'
1/2"=1'-0" 0 1' 2' 3' 4' 5' 6'
3/4"=1'-0" 0 1' 2' 3' 4'

REVISIONS			
SYM	DESCRIPTION	DATE	SATISFACTORY APPROVED BY

S-6

REID & CORNWELL, Ltd.
Consulting Structural Engineers
2 Lynnhaven Executive Park
Virginia Beach, Va. 23452

DEPARTMENT OF THE NAVY — NAVAL FACILITIES ENGINEERING COMMAND
NAVY PUBLIC WORKS CENTER
NAVAL STATION — NORFOLK, VIRGINIA

JOB ORDER NO. 1620182
DES. JES | DR. BBB | CHK. CJR
BR. MGR. E. L. THEISZ
SUBMITTED BY:
FIRM MEMBER / PRINCIPAL
EIC E. L. THEISZ
DIV. DIR. R. H. IVES JR.
APPROVED: DATE: 12/12/92
SATISFACTORY TO ACTIVITY
APPROVED: DATE:
FOR C.O. COMMANDER NAVFAC

COMMONWEALTH OF VIRGINIA — CHARLES J. RIBB — No. 6751 — 4-24-92 — PROFESSIONAL ENGINEER

CRANEY ISLAND, PORTSMOUTH, VIRGINIA

REPAIR PIER D MOORING SYSTEM

FENDER SYSTEM PLAN & DETAILS

SIZE	CODE ID NO.	NAVFAC DRAWING NO.	PWC DRAWING NO.
D	80091	4,242,507	14,184E
		CONSTR. CONTR. NO. N62470-90-C-4729	
SCALE: GRAPHIC		SPEC. 05-90-4729	SHEET 6 OF 8

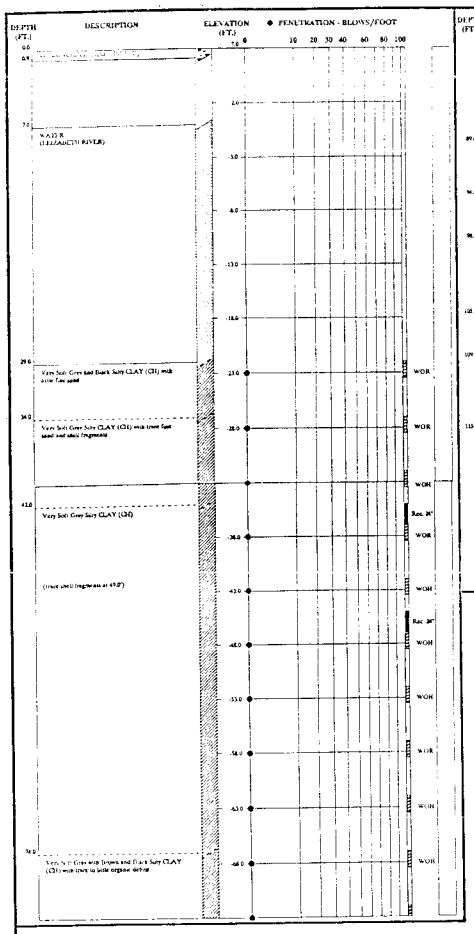

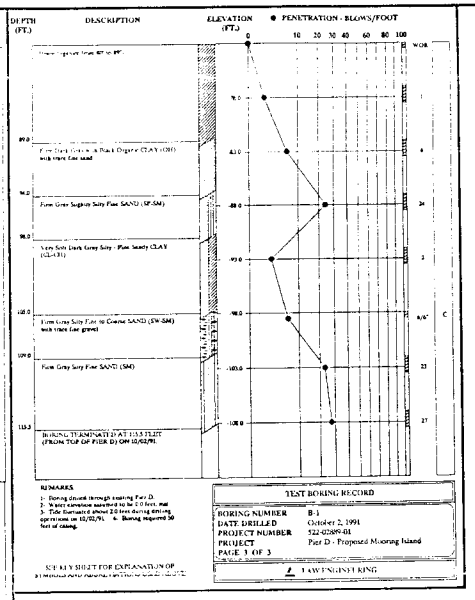

NOTE:
SEE DRAWING S-1 FOR BORING B-1 LOCATION

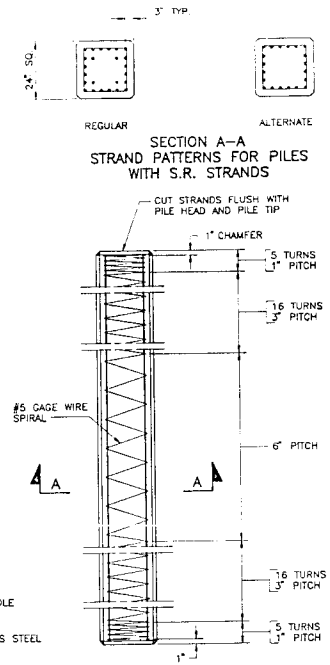

SECTION A–A
STRAND PATTERNS FOR PILES WITH S.R. STRANDS

ELEVATION

NOTES:

CONCRETE FOR 24" SQ. PRESTRESSED PILES SHALL HAVE A MIN. COMPRESSIVE STRENGTH OF 5000 PSI AT AN AGE OF 28 DAYS

MINIMUM COMPRESSIVE STRENGTH OF CONCRETE FOR 24" SQ. PRESTRESSED PILES AT TIME OF RELEASE OF STRANDS SHALL BE 3500 PSI.

DEFORMED REINFORCING BARS SHALL CONFORM TO ASTM A615, GRADE 60.

ALL PRESTRESSING STRANDS SHALL BE 270K.

WHERE PILES ARE EXPOSED IN TIDAL WATER, THE SPIRAL TIES AND ALL OTHER MILD REINFORCING STEEL IN THE PILE SHALL BE EPOXY COATED.

APPLY AN EPOXY RESIN COATING ON ALL PRESTRESSED CONCRETE PILING A MINIMUM OF 10'-0" BELOW BUTT OF PILE. APPLY EPOXY COATING IN ACCORDANCE WITH SEC. 403.03(I) OF THE VDOT ROAD & BRIDGE SPECIFICATIONS, 1991.

NOTE A:
PROVIDE 1 3/8"ø PREFORMED PLAIN HOLES OR 2"ø HOLES FORMED WITH GALVANIZED CORRUGATED METAL. AFTER DRIVING THE PILE AND CLEANING OUT THE HOLES THE #8 REINFORCING BARS SHALL BE INSTALLED AND THE HOLES SHALL BE FILLED WITH APPROVED EPOXY-RESIN GROUT.

NOTE B:
1'-6" ● CATWALK SUPPORT TYPES 1 & 2
2'-6" ● MOORING ISLAND

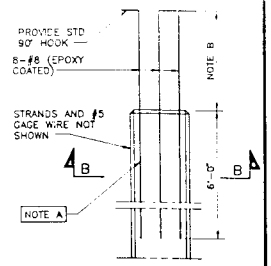

ELEVATION

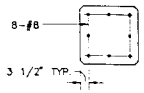

SECTION B–B

POINTS	PICK UP POINTS
1	0.292L, 0.708L; L
2	0.207L, 0.586L, 0.207L; L
3	0.145L, 0.355L, 0.355L, 0.145L; L
4	0.107L, 0.262L, 0.262L, 0.262L, 0.107L; L

UNLESS SPECIAL LIFTING DEVICES ARE ATTACHED FOR PICK-UP, PICK-UP POINTS SHALL BE PLAINLY MARKED ON ALL PILES AFTER REMOVAL OF THE FORMS. THE PILE SHALL BE SUPPORTED ONLY AT THE INDICATED PICK-UP POINTS WHILE IN STORAGE OR BEING HANDLED. THE USE OF PROPER RIGGING IS REQUIRED TO ENSURE THAT THAT THE PICK-UP POINTS REMAIN IN A STRAIGHT LINE DURING LIFTING AND WHEN POSITIONING THE PILE FOR DRIVING. THE USE OF SPECIAL EMBEDDED OR ATTACHED LIFTING DEVICES, THE EMPLOYMENT OF OTHER PICK-UP POINTS OR ANY OTHER METHOD OF PICK UP SHALL BE SUBJECT TO APPROVAL BY THE CONTRACTING OFFICER.

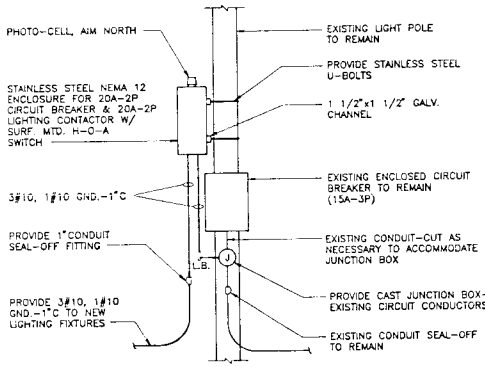

ELECTRICAL SERVICE DETAIL
N.T.S.

PILE SIZE	NO. AND SIZE OF S.R. STRANDS (PILES WITH STRESS-RELIEVED STRANDS)		TOTAL PRETENSIONING FORCE-POUNDS		UNIT PRESTRESS (AFTER LOSSES) PSI		NO. AND SIZE OF L.R. STRANDS (PILES WITH LOW-RELAXATION STRANDS)	TOTAL PRETENSIONING FORCE-POUNDS	UNIT PRESTRESS (AFTER LOSSES) PSI	SECTION MODULUS IN.³
	REGULAR	ALTERNATE	REGULAR	ALTERNATE	REGULAR	ALTERNATE				
24"	24-7/16"ø	20-1/2"ø	520,800	578,200	723	803	20-7/16"ø	456,440	700	2,304

PILE SIZE	APPROX. WT. PER LIN. FT. POUNDS	MAXIMUM LENGTHS FOR VARIOUS PICK-UP SYSTEMS 1-POINT	2-POINT	3-POINT	4-POINT
		L	L	L	L
24"	600	72'	102'	146'	198'

MAXIMUM LENGTHS ARE DETERMINED FROM IMPACT LOADS. L IS THE MAXIMUM PICK-UP LENGTH BASED ON A CONCRETE COMPRESSIVE STRENGTH OF 5000 PSI. IF PILES ARE PICKED UP WHEN THE CONCRETE STRENGTH IS LESS THEN 5000 PSI, THE MAXIMUM PICK-UP LENGTH SHALL BE THE TABULATED LENGTH REDUCED BY 1% FOR EVERY 250 PSI BELOW 5000 PSI.

REVISIONS			
SYM	DESCRIPTION	DATE	SATISFACTORY APPROVED BY

S-7

REID & CORNWELL, Ltd.
Consulting Structural Engineers
2 Lynnhaven Executive Park
Virginia Beach, Va 23452

DEPARTMENT OF THE NAVY — NAVAL FACILITIES ENGINEERING COMMAND
NAVY PUBLIC WORKS CENTER
NAVAL STATION — NORFOLK, VIRGINIA

JOB ORDER NO. 1620162
DES. JES | DR. BBB | CHK. CJR
BR. MGR. E. L. THDSZ
SUBMITTED BY: E. L. Thdsz
FIRM MEMBER / PRINCIPAL
EIC E. L. THDSZ
DIV. DIR. R. H. MES JR.
APPROVED: DATE: 12/12/92
SATISFACTORY TO ACTIVITY
APPROVED: DATE:
FOR C.O. COMMANDER, NAVFAC

COMMONWEALTH OF VIRGINIA — CHARLES J. REID — No. 6751 — 4-24-92 — PROFESSIONAL ENGINEER

CRANEY ISLAND, PORTSMOUTH, VIRGINIA

REPAIR PIER D MOORING SYSTEM

CONCRETE PILE DETAILS & BORING LOGS

SIZE	CODE ID NO.	NAVFAC DRAWING NO.	PWC DRAWING NO.
D	80091	4,242,508	14,184F

CONSTR. CONTR. NO. N62470-89-C-4729
SCALE: GRAPHIC | SPEC. 05-93-4729 | SHEET 7 OF 8

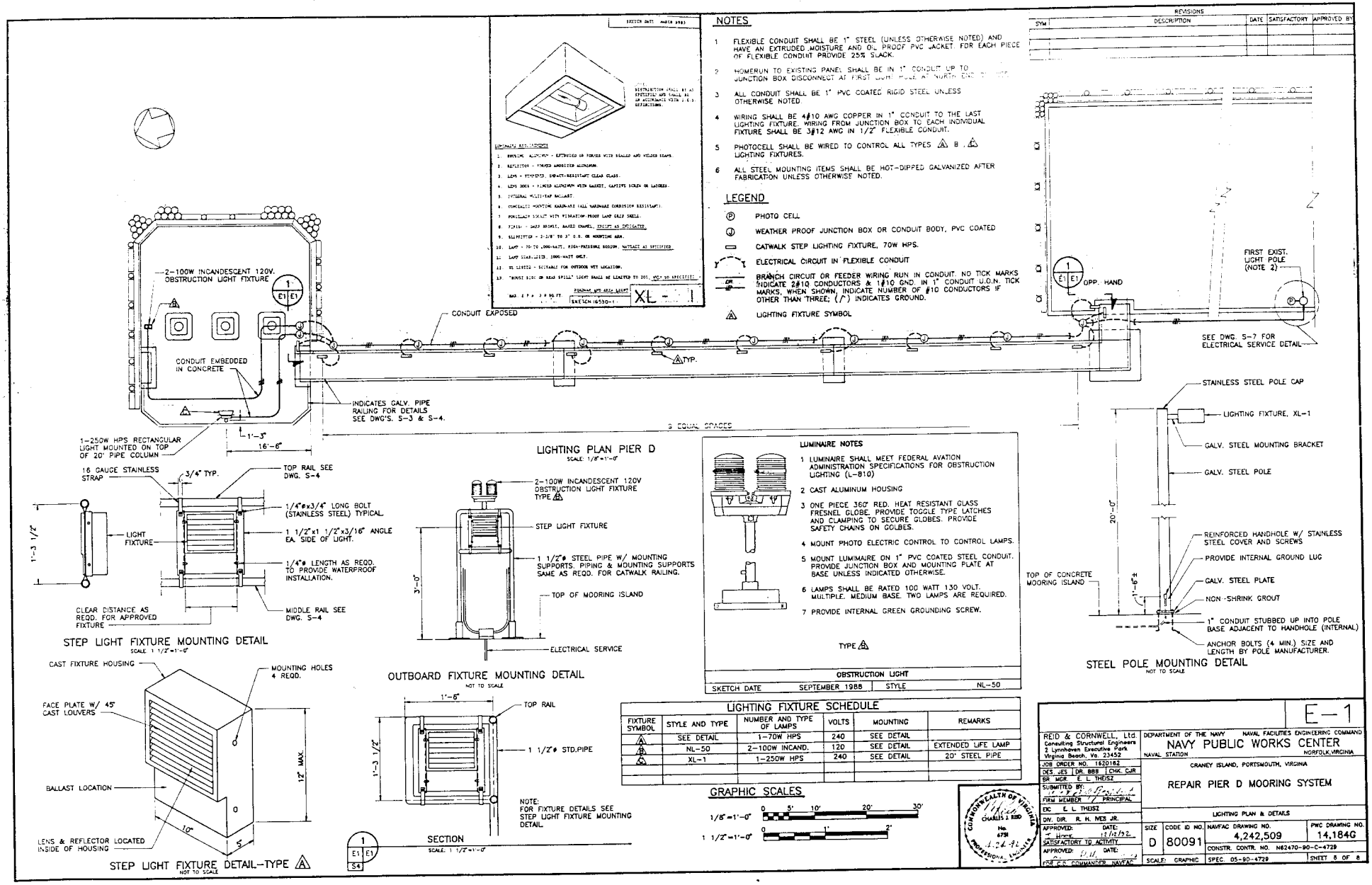

NOTES

1. FLEXIBLE CONDUIT SHALL BE 1" STEEL (UNLESS OTHERWISE NOTED) AND HAVE AN EXTRUDED MOISTURE AND OIL PROOF PVC JACKET. FOR EACH PIECE OF FLEXIBLE CONDUIT PROVIDE 25% SLACK.
2. HOMERUN TO EXISTING PANEL SHALL BE IN 1" CONDUIT UP TO JUNCTION BOX DISCONNECT AT FIRST LIGHT POLE AT NORTH END OF PIER.
3. ALL CONDUIT SHALL BE 1" PVC COATED RIGID STEEL UNLESS OTHERWISE NOTED.
4. WIRING SHALL BE 4#10 AWG COPPER IN 1" CONDUIT TO THE LAST LIGHTING FIXTURE. WIRING FROM JUNCTION BOX TO EACH INDIVIDUAL FIXTURE SHALL BE 3#12 AWG IN 1/2" FLEXIBLE CONDUIT.
5. PHOTOCELL SHALL BE WIRED TO CONTROL ALL TYPES △ B , △ LIGHTING FIXTURES.
6. ALL STEEL MOUNTING ITEMS SHALL BE HOT-DIPPED GALVANIZED AFTER FABRICATION UNLESS OTHERWISE NOTED.

LEGEND

- (P) PHOTO CELL
- (J) WEATHER PROOF JUNCTION BOX OR CONDUIT BODY, PVC COATED
- ▭ CATWALK STEP LIGHTING FIXTURE, 70W HPS.
- ELECTRICAL CIRCUIT IN FLEXIBLE CONDUIT
- BRANCH CIRCUIT OR FEEDER WIRING RUN IN CONDUIT. NO TICK MARKS INDICATE 2#10 CONDUCTORS & 1#10 GND. IN 1" CONDUIT U.O.N. TICK MARKS, WHEN SHOWN, INDICATE NUMBER OF #10 CONDUCTORS IF OTHER THAN THREE; (⏚) INDICATES GROUND.
- △ LIGHTING FIXTURE SYMBOL

LUMINAIRE NOTES

1. LUMINAIRE SHALL MEET FEDERAL AVATION ADMINISTRATION SPECIFICATIONS FOR OBSTRUCTION LIGHTING (L-810)
2. CAST ALUMINUM HOUSING
3. ONE PIECE 360° RED. HEAT RESISTANT GLASS FRESNEL GLOBE. PROVIDE TOGGLE TYPE LATCHES AND CLAMPING TO SECURE GLOBES. PROVIDE SAFETY CHAINS ON GOLBES.
4. MOUNT PHOTO ELECTRIC CONTROL TO CONTROL LAMPS.
5. MOUNT LUMIMAIRE ON 1" PVC COATED STEEL CONDUIT. PROVIDE JUNCTION BOX AND MOUNTING PLATE AT BASE UNLESS INDICATED OTHERWISE.
6. LAMPS SHALL BE RATED 100 WATT 130 VOLT. MULTIPLE. MEDIUM BASE. TWO LAMPS ARE REQUIRED.
7. PROVIDE INTERNAL GREEN GROUNDING SCREW.

TYPE △

OBSTRUCTION LIGHT			
SKETCH DATE	SEPTEMBER 1988	STYLE	NL-50

LIGHTING FIXTURE SCHEDULE

FIXTURE SYMBOL	STYLE AND TYPE	NUMBER AND TYPE OF LAMPS	VOLTS	MOUNTING	REMARKS
△	SEE DETAIL	1-70W HPS	240	SEE DETAIL	
△ B	NL-50	2-100W INCAND.	120	SEE DETAIL	EXTENDED LIFE LAMP
△	XL-1	1-250W HPS	240	SEE DETAIL	20' STEEL PIPE

REVISIONS				
SYM	DESCRIPTION	DATE	SATISFACTORY	APPROVED BY

E-1

REID & CORNWELL, Ltd.
Consulting Structural Engineers
2 Lynnhaven Executive Park
Virginia Beach, Va. 23452

JOB ORDER NO. 1620182
DES. JES | DR. BBB | CHK. CJR
BR. MGR. E. L. THEISZ
SUBMITTED BY: E. L. Theisz
FIRM MEMBER / PRINCIPAL
EIC E. L. THEISZ
DIV. DIR. R. H. MES JR.
APPROVED: R. H. Mes Jr. DATE: 12/12/92
SATISFACTORY TO ACTIVITY
APPROVED: DATE:
FOR CO. COMMANDER, NAVFAC

COMMONWEALTH OF VIRGINIA
CHARLES J. REID
No. 6731
PROFESSIONAL ENGINEER
12-24-92

DEPARTMENT OF THE NAVY — NAVAL FACILITIES ENGINEERING COMMAND
NAVY PUBLIC WORKS CENTER
NAVAL STATION — NORFOLK, VIRGINIA
CRANEY ISLAND, PORTSMOUTH, VIRGINIA

REPAIR PIER D MOORING SYSTEM

LIGHTING PLAN & DETAILS

SIZE	CODE ID NO.	NAVFAC DRAWING NO.	PWC DRAWING NO.
D	80091	4,242,509	14,184G
		CONSTR. CONTR. NO. N62470-90-C-4729	
SCALE: GRAPHIC		SPEC. 05-90-4729	SHEET 8 OF 8