GENERAL NOTES

1.00 ADMINISTRATIVE NOTES

1.01 THIS DRAWING WAS DEVELOPED FOR ACCOMPLISHMENT OF SCD-489, BASED ON A SHIPCHECK OF THE USS DEXTROUS (MCM 13). AN APPLICABILITY SHIPCHECK IS REQUIRED PRIOR TO ITS USE ON OTHER SHIPS.

1.02 THIS DRAWING IS BASED UPON THE REQUIREMENTS OF NAVSEA S9AA0-AB-GOS-010/GSO 2004 EDITION REV 4, WHOSE PROVISIONS SHALL PREVAIL IN AREAS WHERE THIS DRAWING IS SILENT.

1.03 EXCEPT WHERE OTHERWISE NOTED OR APPROVED BY NAVSEA, THE EFFECTIVE DATE OF FEDERAL OR MILITARY SPECIFICATIONS, PUBLICATIONS AND STANDARD/TYPE DRAWINGS, AND REVISIONS AND CHANGES THERETO, SHALL BE THE EFFECTIVE DATE OF NAVSEA S9AA0-AB-GOS-010/GSO. LATER SPECIFICATION REVISIONS MAY BE USED PROVIDED THEY MEET THE INTENT AND INTERFACE REQUIREMENTS OF THE SPECIFICATION INVOKED FOR THE SPECIFIC AVAILABILITY.

1.04 THE PURPOSE OF THIS DRAWING IS TO SHOW FOUNDATION MODIFICATIONS IN SUPPORT OF SCD-489.

1.05 THE NUMBER AND LETTER IN PARENTHESIS ( ) BELOW THE VIEW TITLE DENOTES THE VIEW FROM WHICH IT WAS TAKEN.

1.06 AN ASTERISK (*) BESIDE A REFERENCE SIGNIFIES THAT THE REFERENCE IS REQUIRED TO ACCOMPLISH WORK SPECIFIED BY THIS DRAWING.

1.07 ENGINEERING DATA SUPPORTING THIS DRAWING IS FOUND IN REFERENCE 7.

1.08 STATIC FREQUENCY CONVERTER INSTALLATION (SCD-298) MUST BE ACCOMPLISHED PRIOR OR CONCURRENT TO THIS INSTALLATION TO PROVIDE SPACE FOR THE SWEEP TRACK MONITOR, ITEM #1, ELEVATION 27-A.

2.00 PRODUCTION NOTES

2.01 TEMPLATE WORK FROM SHIP AND EQUIPMENT.

2.02 MOUNTING SURFACES OF FOUNDATIONS SHALL BE INSTALLED PARALLEL OR PERPENDICULAR TO THE BASEPLANE OF THE SHIP, UNLESS OTHERWISE NOTED.

2.03 ALL SNIPES SHALL BE 1/2-INCH BY 45 DEGREES, UNLESS OTHERWISE NOTED.

2.04 GRIND SMOOTH ALL SHARP CORNERS AND ROUGH EDGES LIABLE TO CAUSE INJURY TO PERSONNEL OR DAMAGE TO EQUIPMENT.

2.05 THE FOLLOWING ELECTRODE(S) SHALL BE USED FOR WELDING:

MATERIAL	ELECTRODE
CRES TO CRES	316LXX

USE OF OTHER ELECTRODES MAY REQUIRE RESIZING OF WELDS IN ACCORDANCE WITH MIL-STD-1628 AND 1689.

2.06 FABRICATION, WELDING AND INSPECTION SHALL BE IN ACCORDANCE WITH NAVSEA S9AA0-AB-GOS-010/GSO, NAVSEA S9086-CH-STM-010/CH-074 AND MIL-STD-1689.

2.07 ALL METALLIC MATERIAL SHALL HAVE A MAGNETIC PERMEABILITY OF 2.0 OR LESS AFTER FABRICATION, EXCEPT MATERIAL REQUIRED TO BE MAGNETIC DUE TO ITS FUNCTION AND AUTHORIZED BY NAVSEA.

2.08 THERE SHALL BE NO SUBSTITUTION OF METALLIC MATERIAL WITHOUT THE SPECIFIC WRITTEN APPROVAL OF THE PUGET SOUND NAVAL SHIPYARD AND IMF MINEWARFARE PLANNING YARD TECHNICAL REPRESENTATIVE.

2.09 FAYING SURFACES OF METALLIC COMPONENTS TO WOOD SHALL BE TREATED PER REQUIREMENTS OF REFERENCE 9.

2.10 ALL FASTENERS IN WOOD SHALL HAVE A MINIMUM OF FOUR (4) BOLT DIAMETERS FOR FASTENER SPACING AND EDGE DISTANCE.

2.11 DRILL HOLES IN WOOD THE SAME SIZE AS THE FASTENER DIAMETER FOR A FORCE FIT.

2.12 WASHERS SHALL BE USED UNDER ALL NUTS, BOLTS AND SCREW HEADS THAT ARE BEARING AGAINST WOOD.

2.13 FASTENERS SHALL BE SET SNUGLY, BUT NOT SO TIGHTLY SO AS TO WEAKEN THE MATERIAL BY RUPTURE OF THE WOOD FIBERS ADJACENT TO THE FASTENERS.

2.14 PLUG AND SEAL ALL HOLES IN WOOD STRUCTURE IN WAY OF REMOVED BOLTS AND SCREWS WITH WOOD PLUGS SET IN WEST SYSTEM EPOXY OR EQUAL. REFER TO MANUFACTURER'S INSTRUCTIONS AT WWW.WESTSYSTEM.COM. SET PLUGS WITH GRAINS IN THE SAME DIRECTION AS GRAINS OF STRUCTURAL MEMBER.

2.15 PREPARE FOUNDATION SURFACES AND PAINT IN ACCORDANCE WITH NAVSEA STANDARD ITEM 009-32.

2.16 PAINT, DECK COVERING, AND INSULATION DAMAGED BY WORK SHOWN ON THIS DRAWING SHALL BE REPAIRED IN ACCORDANCE WITH NAVSEA STANDARD ITEM 009-32, NAVSEA S9086-VG-STM-010/CH-634, AND NAVSEA S9086-VH-STM-010/CH-635 RESPECTIVELY.

REMOVAL NOTES

R-1 ALL PERMANENTLY REMOVED MATERIAL WHOSE DISPOSITION IS NOT OTHERWISE INDICATED SHALL BE TURNED IN TO THE NEAREST NAVAL PROPERTY ADMINISTRATOR.

R-2 TEMPORARY REMOVAL AND RE-INSTALLATION OF INTERFERENCES NECESSARY TO ACCOMPLISH WORK SHALL BE THE RESPONSIBILITY OF THE INSTALLING ACTIVITY.

TEST NOTES

T-1 NEW PENETRATIONS AND/OR PATCHED BOLT HOLES THROUGH WATERTIGHT DECK OR BULKHEAD SHALL BE TESTED FOR TIGHTNESS BY UTILIZING AN ALTERNATE TEST METHOD AS SPECIFIED IN SECTION 193, PARAGRAPH 192F OF NAVSEA S9AA0-AB-010/GSO.

GENERAL NOTES (CONT'D)

2.17 AFTER INSTALLATION, NEW WOOD MEMBERS SHALL BE TREATED FOR DECAY PROTECTION BY APPLYING A SINGLE BRUSH COAT OF COPPER NAPHTHENATE PRESERVATIVE PER TT-W-572B, COMP-B. ALLOW 72-HOURS DRYING TIME PRIOR TO PAINTING. TREATMENT IS NOT REQUIRED ON SURFACES WHICH WILL BE GLUED OR WILL RECEIVE FIBERGLASS COVERING NOR ON DECORATIVE EXPOSED WOOD GRAIN RECEIVING A CLEAR FINISH.

2.18 THE GRAIN OF WOOD MEMBERS SHALL RUN PARALLEL WITH THE LENGTH DIMENSION SPECIFIED IN THE LIST OF MATERIAL OR SHALL RUN PARALLEL WITH THE LONGEST DIMENSION WHEN NO LENGTH IS SPECIFIED.

2.19 ALL METALLIC PARTS SHALL BE BONDED TO GROUND IN ACCORDANCE WITH MIL-STD-1310 AND REFERENCE 8. SEE DETAIL 10-E.

2.20 SUGGESTED SUPPLIER FOR ITEMS 13, 14 AND 19-21:
MCMASTER CARR
HTTP://WWW.MCMASTER.COM
630-600-3600

SUGGESTED SUPPLIER FOR ITEM 3:
JAMESTOWN METAL PRODUCTS
HTTP://WWW.JAMESTOWN.COM
(716) 665-5313

2.21 GRP DECK COVERING SHALL BE REPAIRED IN ACCORDANCE WITH REFERENCE 14.

2.22 LEVELING PADS SHALL BE SET IN LATEX CAULKING TO PREVENT WATER INTRUSION, DO NOT SET IN ADHESIVE.

2.23 STRAP ASSEMBLY (ITEM 39) SHALL BE CONSTRUCTED AS SHOWN IN DETAIL 45-C. OVERALL LENGTH OF ASSEMBLY IS 24 INCHES. BREAKING STRENGTH OF ASSEMBLY SHALL BE 1400 POUNDS MINIMUM. SIMILAR OR EQUAL TO DAVIS AIRCRAFT PRODUCTS ASSEMBLY COMPONENTS:
BUCKLE: CAM BUCKLE, 1 INCH STAINLESS STEEL, PT# FDC-4511F-10M1.
WEBBING: 1 INCH WIDE POLYESTER, BLACK, PT# DW222.
END FITTINGS: MOUNTING PLATE FOR 1" WEBBING, PT# FD-1281C.

SUGGESTED SOURCES:
- DAVIS AIRCRAFT PRODUCTS CO, 1150 WALNUT AVE, BOHEMIA, NY 11716, PH 631-563-1500, WWW.DAVISAIRCRAFTPRODUCTS.COM
- OLYMPIC SYNTHETIC PRODUCTS, PO BOX 1207, SEQUIM, WA 98382, PH 1-800-437-5464, WWW.OSPSLING.COM

2.24 FOR ITEMS REFERRING TO THIS NOTE, SOURCE SHALL BE NSWC PANAMA CITY. POC IS JEFF BARR [JEFFREY.R.BARR@NAVY.MIL] (850)235-5726.

2.25 ALL BLOCKING SHALL BE GLUED IN PLACE AND ALL WOOD TO WOOD JOINTS SHALL BE GLUED WITH WEST SYSTEM EPOXY OR EQUAL. REFER TO MANUFACTURER'S INSTRUCTIONS AT WWW.WESTSYSTEM.COM.

2.26 PACKING FOR THROUGH BOLTS OR SCREWS SHALL BE PROVIDED AS REQUIRED TO MAINTAIN TIGHTNESS.

FOR LIST OF MATERIAL SEE SHEET 7
FOR REMOVAL LIST OF MATERIAL SEE SHEET 2

REFERENCES

NO.	HULL	TITLE	IDENT
18	MCM1CL	NON-STRUCTURAL BHDS ARR/DETS	621-6645227
17	MCM1CL	400HZ GENERATOR ROOM FOUNDATIONS	180-6644664
16	MCM13	FOUNDATION AND DETAIL MODS 400HZ STATIC FREQUENCY CONVERTER	180-8284333
15	MCM13	AAG/IAAG INSTL CABLE & BWD	476-8352659
* 14	TECHMN	MANUAL FOR STRUCTURAL REPAIR OF MCM1 CLASS SHIPS	S9100-AD-MMA-010
13	MCM13	ELECTRICAL REMOVALS INCID AAG	476-8352658
12	MCM13	ARR & FDN MODS ACOUSTIC POWER CONVERTER RELOCATION	401-6900564
11	MCM1CL	ACOUSTIC, MECHANICAL AND MAGNETIC MINESWEEPING DETAILS	476-6644889
10	MCM1CL	DECK COVERING SCHEDULE	634-6645251
9	MCM1CL	PAINTING SCHEDULE	631-6645248
* 8	MCM1CL	METHODS SHIELDING, BONDING & GROUNDING	406-6644812
7	MCM6	STRUCTURAL CALCULATIONS INCID TO AAG	835-7590796
6	MCM1CL	03 LEVEL FRAMING AND DECKING	130-6644634
5	MCM1CL	01 LEVEL FRAMING & PLANKING AFT	130-6644632
4	MCM1CL	ACOUSTIC, MECHANICAL AND MAGNETIC MINESWEEPING ARRANGEMENT	476-6644891
3	MCM1CL	02 LEVEL FRAMING AND DECKING	130-6644633
2	MCM1CL	01 LEVEL FRAMING & PLANKING FWD	130-6644631
1	MCM1CL	AN/SQQ 32 WINCH FOUNDATION	180-6645322

REVISIONS

REV	ZONE	DESCRIPTION	ENGR	DATE	APVD

DISTRIBUTION STATEMENT D
DISTRIBUTION AUTHORIZED TO DOD AND DOD CONTRACTORS ONLY; TO PROTECT CRITICAL TECHNOLOGY; FOR DATE USE THE APPROVED DATE OF THIS DOCUMENT. OTHER U.S. REQUESTS SHALL BE REFERRED TO THE APPROPRIATE HULL PLANNING YD.

REV	ALTERATION NUMBER	WT GRP (SWBS)	WT (LBS)	I X XI OR XR	VCG REF BL	LCG REF ⊠	F OR A	TCG REF CL	P S OR B	VAL BY
-	SCD 489	476	200	I	26.7	39.9	A	2.6	S	
-	SCD 489	476	796	R	30.9	24.0	F	3.3	S	

WEIGHT CONTROL DATA
WEIGHT IN POUNDS TO THE NEAREST POUND
LEVERS IN FEET TO NEAREST TENTH OF A FOOT
USE SEPARATE LINES FOR EACH WT GRP, S/A, REV, WT INSTL, WT RMV
I = INSTALL R = REMOVE XI = LOAD ITEM INSTALLED XR = LOAD ITEM REMOVED
F = FWD A = AFT P = PORT S = STBD O = CL

DIMENSIONAL TOLERANCES UNLESS OTHERWISE SPECIFIED

MACH / FAB			GEOMETRIC (WHERE IND)		
DIM.	DEC	FRAC	SYM	GEOMETRY	TOL
UNDER 12		±1/16	—	STRAIGHTNESS	±
12 TO 72		±1/8	▱	FLATNESS	±
OVER 72		±1/4	⊥	PERPENDICULAR	±
DIM ARE IN INCHES			//	PARALLELISM	±
TOL ON ANGLES ± °			◎	CONCENTRICITY	±
FILLETS & RADII TO BE					

SYMBOLS & TOL IN ACCORDANCE WITH ANSI Y14.5

SDI INFORMATION
THIS DRAWING MODIFIES REFERENCES 4, 12 AND 17 UPON ACCOMPLISHMENT OF SCD-489.

REVISION STATUS OF SHEETS

90	80	70	60	50	40	30	20	10	0	1	2	3	4	5	6	7	8	9	10
									-	-	-	-	-	-	-	-			

SHIP APPLICABILITY

SHIP	REV	SHIPCK BY	DT
MCM13	-	PSNS & IMF	4/10

CONTRACT NO.
FSCM NO.

		DATE
PREPARED		
CHECKED		
ENGINEER		
APPROVED		
AUTHORITY:		

PUGET SOUND NAVAL SHIPYARD AND INTERMEDIATE MAINTENANCE FACILITY
1400 FARRAGUT AVE
BREMERTON, WA 98314-5001
FSCM 82522

PREPARED PSNS	DATE
CHECKED C. JONES /S/	6/28/10
ENGINEER C. BLANKENBAKER /S/	6/28/10
APPROVED A. MIGITA /S/	6/28/10
ACCEPTED FOR NAVSEA	
APPROVED BY NAVSEA	
NOT REQUIRED	

DEPARTMENT OF THE NAVY
NAVAL SEA SYSTEMS COMMAND
WASHINGTON NAVY YARD DC 20376-1010

SCD-489 USS DEXTROUS (MCM 13)
AAG - MISCELLANEOUS
ARRANGEMENTS & DETAIL MODIFICATIONS

AAG MISC ARR & DET MODS

SIZE	FSCM NO.	WTGRP	NAVSEA DRAWING NO.	REV
F	53711	476	8435910	-

SCALE: AS SHOWN CODE: 250.45 SHEET 1 OF 7

LIST OF MATERIAL TO BE REMOVED (QUANTITY FOR ONE SHIP)

ITEM NO	QTY RMVD	DESCRIPTION	DISPOSITION SCRAP	DISPOSITION FWD	DISPOSITION RETAIN	AS BUILT REF	TYPE OF MATERIAL	NSN/MFR PART NO.	APL/PN/ VIEW NO.	UNIT HEAT (BTU/HR)	WEIGHT UNIT	WEIGHT TOTAL	REMARKS
R1	1 EA	ACOUSTICAL PWR CONV UPPER SUPPORT	1			12	CRES		21-A		50.0	50.0	
R2	1 EA	ACOUSTICAL PWR CONV FDN BASE	1			12	CRES/WOOD		23-A		70.0	70.0	
R3	4 EA	ANGLE, 3 X 3 X 1/4 STRONGBACK	4			11	CRES		54-A		15.75	63.0	
R4	4 EA	ACOUSTIC DIAPHRAGMS STOWAGE SUPPORT	4			11	CRES/WOOD		54-A		5.5	22.0	
R5	3 EA	ACOUSTIC DIAPHRAGMS	3			11	CRES		54-A		90.0	270.0	
R6	1 EA	ACOUSTIC TRANSPONDER STOWAGE	1			11	CRES/WOOD		15-C		321.0	321.0	

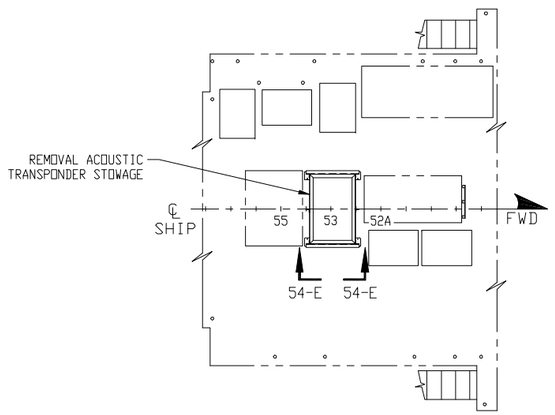

KEY PLAN 15-C
03 LVL
STOWAGE ACOUSTIC TRANSPONDER STOWAGE
SCALE: 1/4"=1'-0"

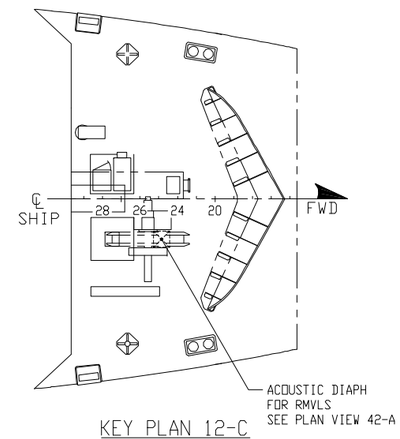

KEY PLAN 12-C
01 LVL
STOWAGE FOR 3 MK4(V) CRATED ACOUSTIC DIAPHRAGMS
SCALE: 3/16"=1'-0"

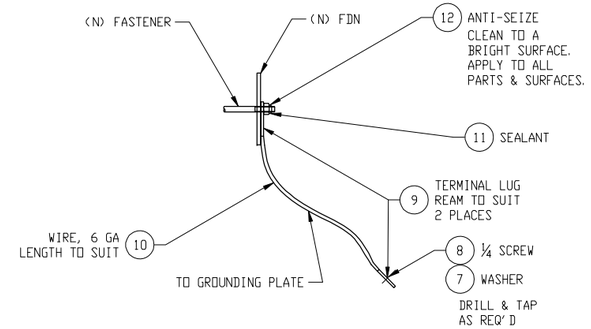

DETAIL 10-E
GROUNDING STRAP INSTALL
SEE NOTE 2.19
SCALE: 3"=1'-0"
(21-D, 27-A, & 31-C)

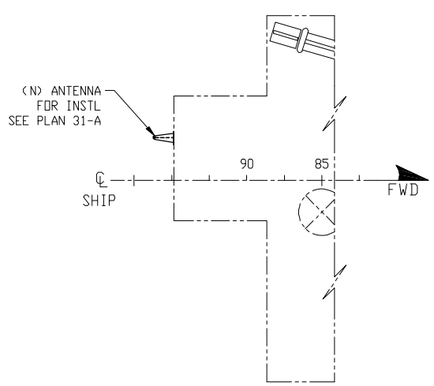

KEY PLAN 14-A
02 LEVEL
WEATHER DECK
SCALE: 3/16"=1'-0"

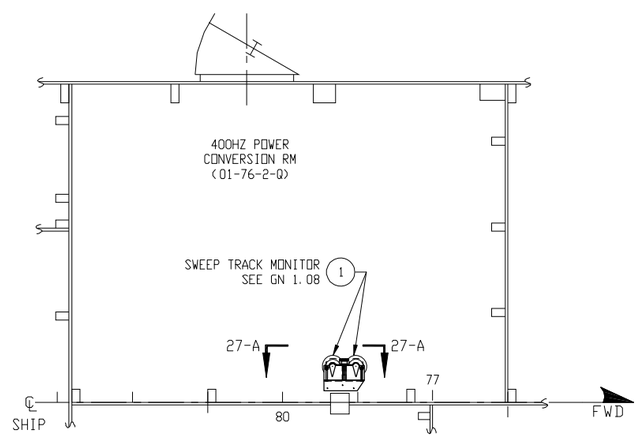

KEY PLAN 12-A
01 LEVEL
400HZ PWR CONVERSION RM
SCALE: 3/4"=1'-0"

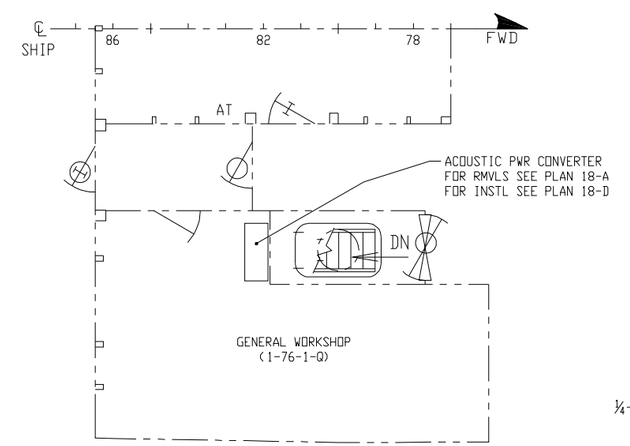

KEY PLAN 10-A
MAIN DECK
GENERAL WORKSHOP
SCALE: 3/8"=1'-0"

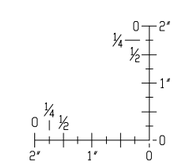

BAR SCALE
(BAR SCALE SHOWN IS FOR REPRODUCTION DISTORTION IDENTIFICATION. BAR SCALE SHALL NOT BE USED FOR SCALING.)

MCM 13

SIZE	FSCM NO.	WT GRP	NAVSEA DRAWING NO.	REV
F	53711	476	8435910	-
SCALE:AS SHOWN		CODE/DEPT:250.45	SHEET 2	

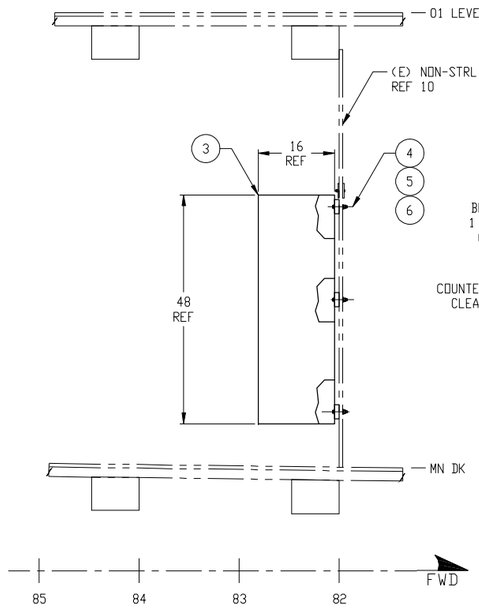

ELEVATION 23-D
STBD LKG INBD
SCALE: 1"=1'-0"
(18-D)

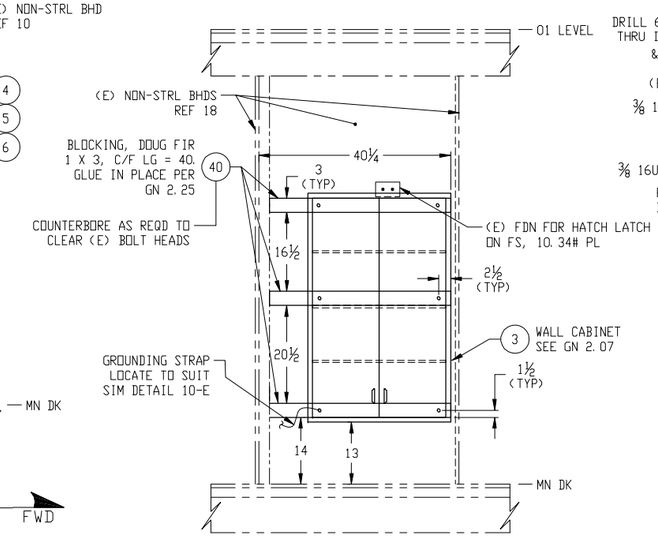

ELEVATION 21-D
STBD LKG FWD
SCALE: 1"=1'-0"
(18-D)

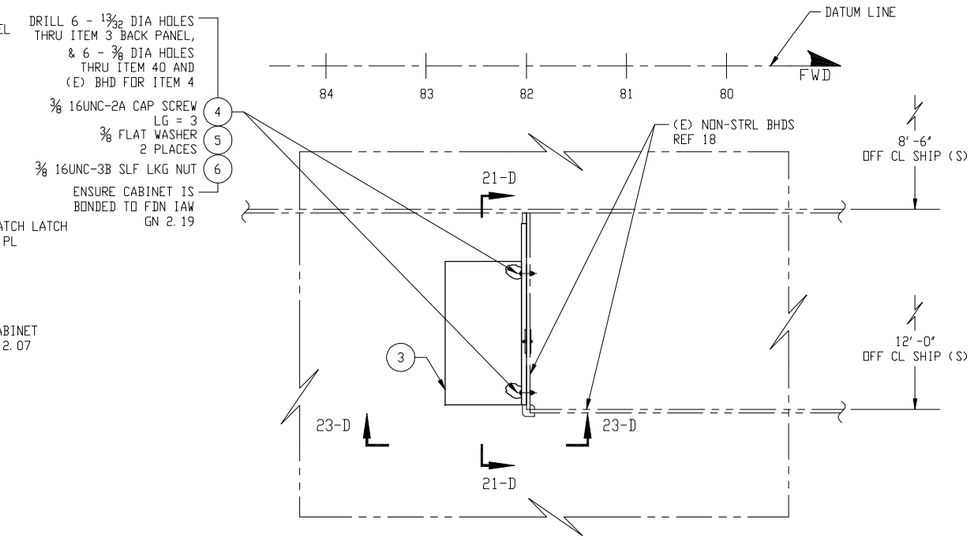

PLAN VIEW 18-D
LOCKER INSTALLATION
GENERAL WORKSHOP
SCALE: 1"=1'-0"
(10-A)

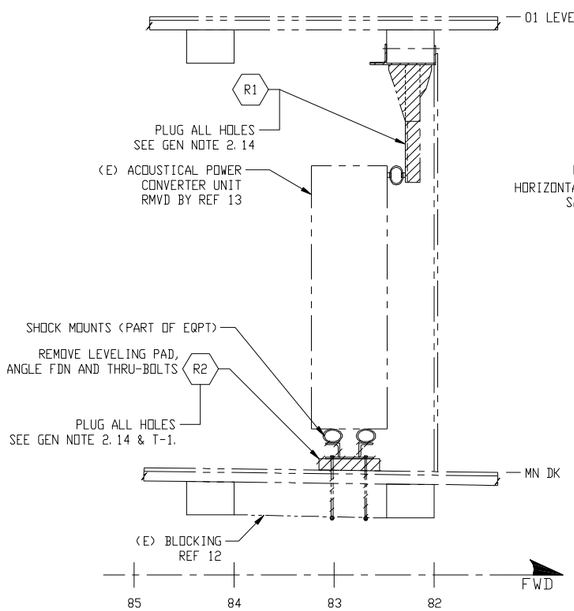

ELEVATION 23-A
STBD LKG INBD
SCALE: 1"=1'-0"
(18-A)

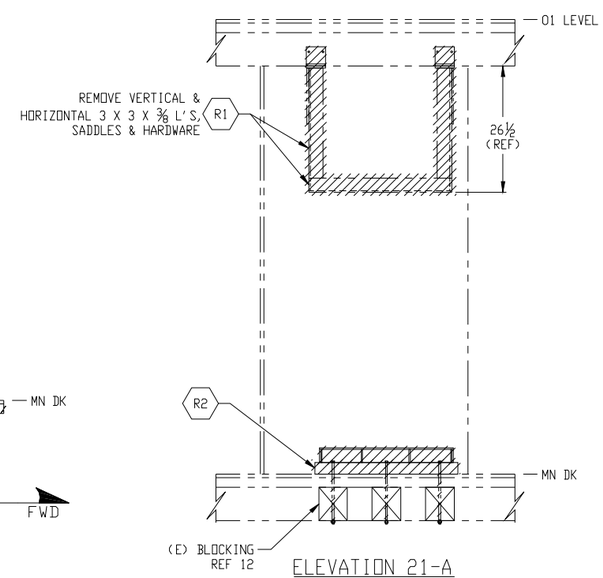

ELEVATION 21-A
STBD LKG FWD
SCALE: 1"=1'-0"
(18-A)

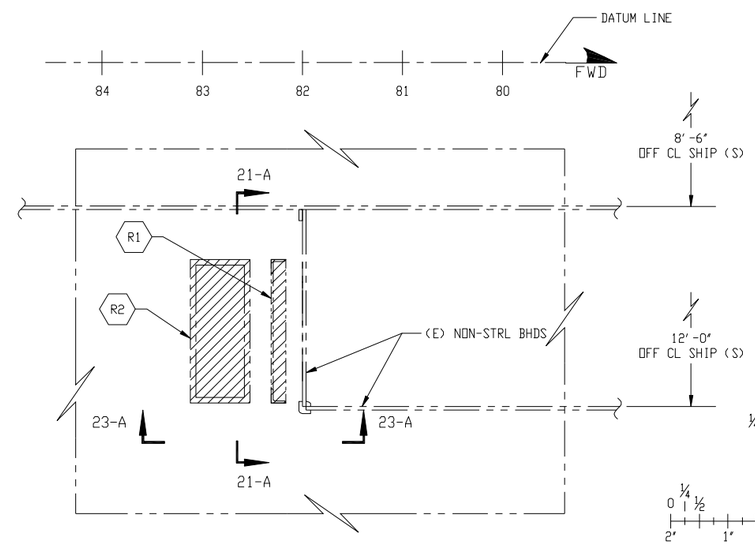

PLAN VIEW 18-A
FOUNDATION REMOVALS
GENERAL WORKSHOP
SCALE: 1"=1'-0"
(10-A)

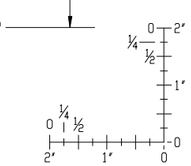

BAR SCALE
(BAR SCALE SHOWN IS FOR REPRODUCTION DISTORTION IDENTIFICATION. BAR SCALE SHALL NOT BE USED FOR SCALING.)

MCM 13

SIZE	FSCM NO.	WT GRP	NAVSEA DRAWING NO.	REV
F	53711	476	8435910	-
SCALE:AS SHOWN		CODE/DEPT:250.45	SHEET 3	

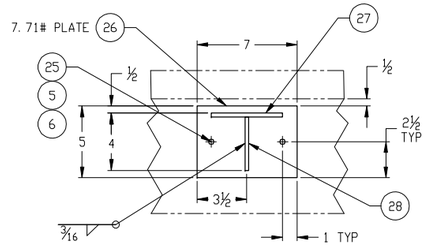

SECTION 31-E
LOOKING FWD
SCALE: 3"=1'-0"
(31-C)

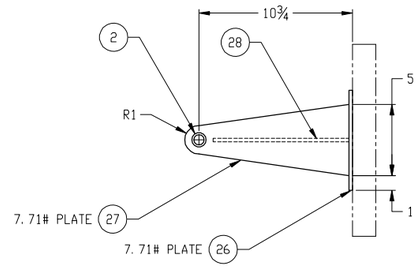

PLAN VIEW 29-E
SCALE: 3"=1'-0"
(31-C)

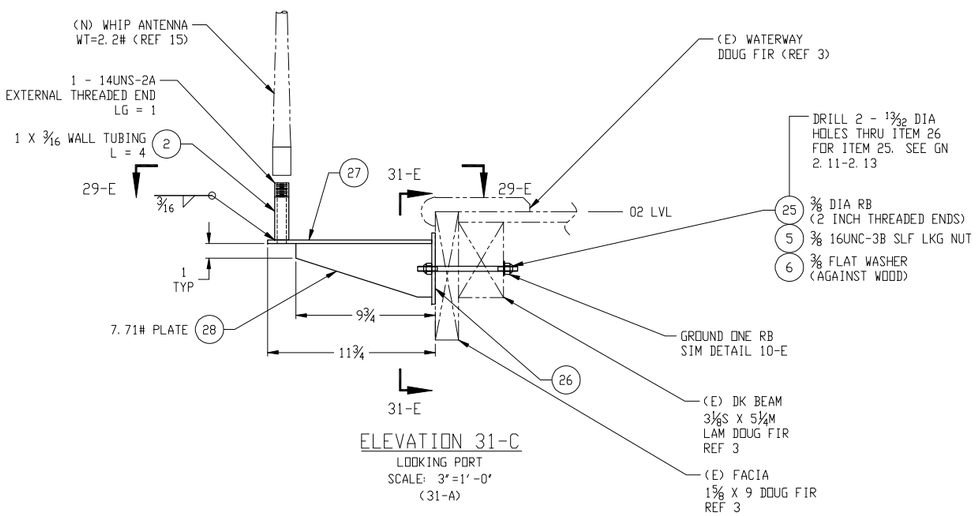

ELEVATION 31-C
LOOKING PORT
SCALE: 3"=1'-0"
(31-A)

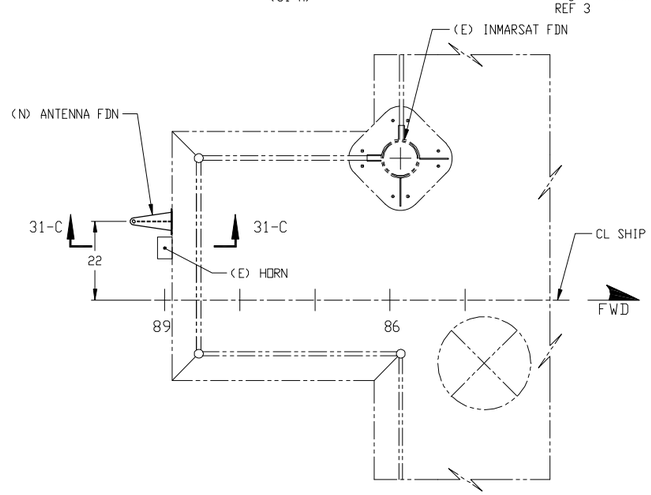

PLAN VIEW 31-A
02 LEVEL - AFT
ANTENNA FDN
SCALE: ¾"=1'-0"
(14-A)

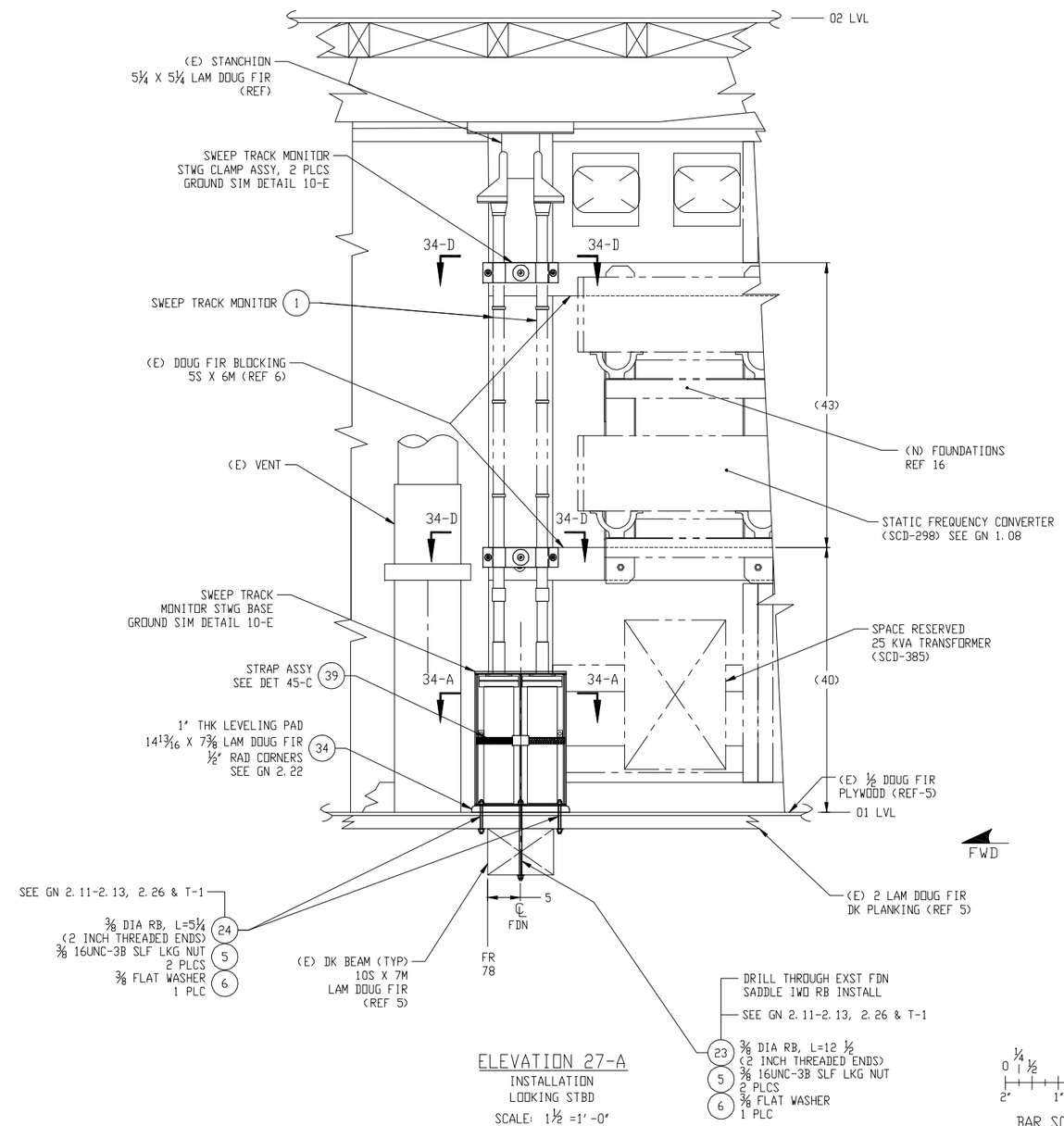

ELEVATION 27-A
INSTALLATION
LOOKING STBD
SCALE: 1½"=1'-0"
(12-A)

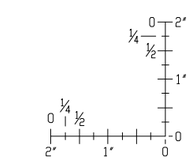

BAR SCALE
(BAR SCALE SHOWN IS FOR REPRODUCTION DISTORTION IDENTIFICATION. BAR SCALE SHALL NOT BE USED FOR SCALING.)

MCM 13

SIZE	FSCM NO.	WT GRP	NAVSEA DRAWING NO.	REV
F	53711	476	8435910	-
SCALE: AS SHOWN		CODE/DEPT-250. 45	SHEET 4	

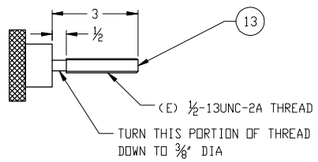

DETAIL 39-E
KNOB
SCALE: 6"=1'-0"
(37-A)

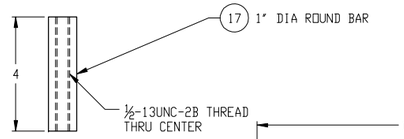

DETAIL 38-F
THREADED SPOOL
SCALE: 6"=1'-0"
(37-D)

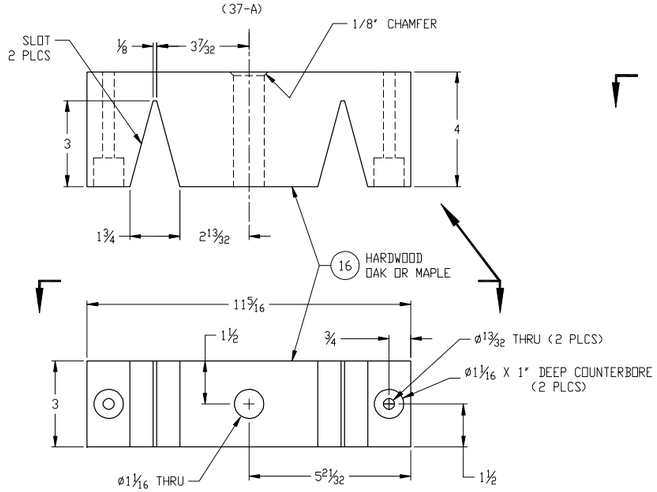

DETAIL 39-C
CLAMP BLOCK
SCALE: 6"=1'-0"
(37-A)

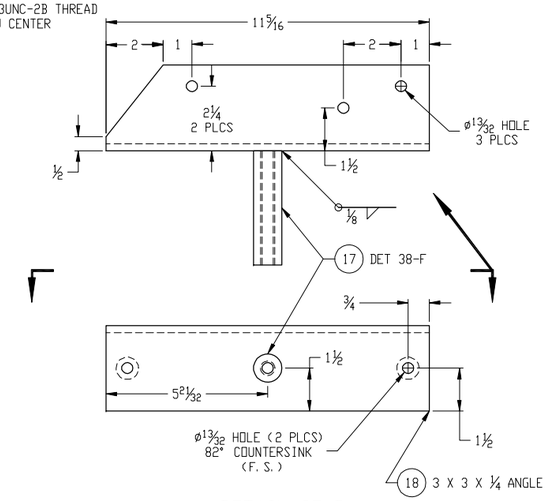

DETAIL 37-D
ANGLE BRACKET
SCALE: 6"=1'-0"
(37-A)

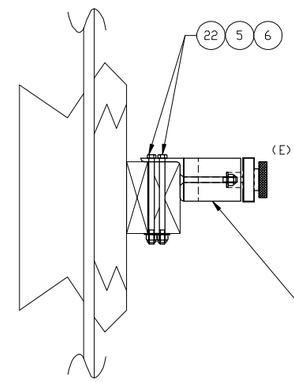

SECTION 35-D
INSTALLATION
CLAMP ASSEMBLY
SCALE: 3"=1'-0"
(34-D)

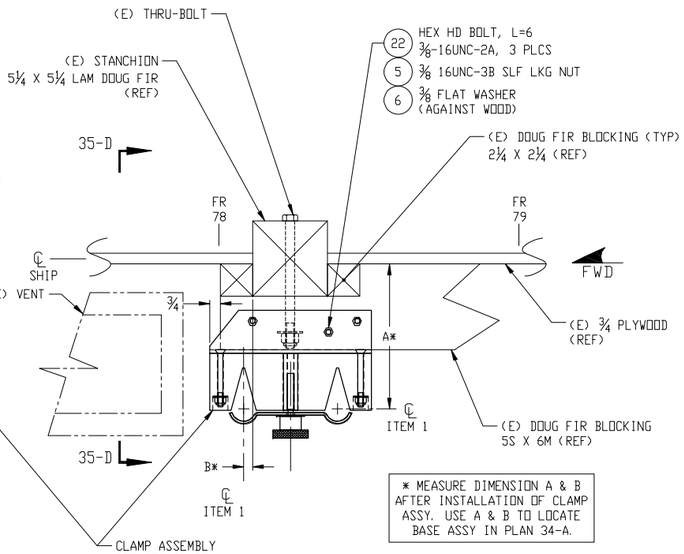

* MEASURE DIMENSION A & B AFTER INSTALLATION OF CLAMP ASSY. USE A & B TO LOCATE BASE ASSY IN PLAN 34-A.

PLAN 34-D
INSTALLATION
SWEEP TRACK MONITOR
CLAMP ASSEMBLY
SCALE: 3"=1'-0"
(27-A)

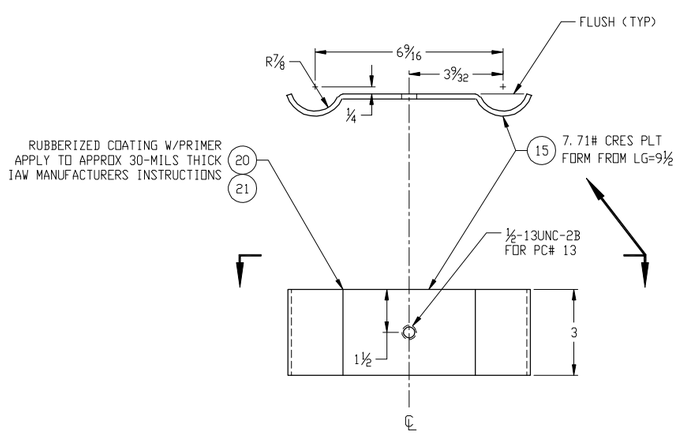

DETAIL 39-A
CLAMP PLATE
SCALE: 6"=1'-0"
(37-A)

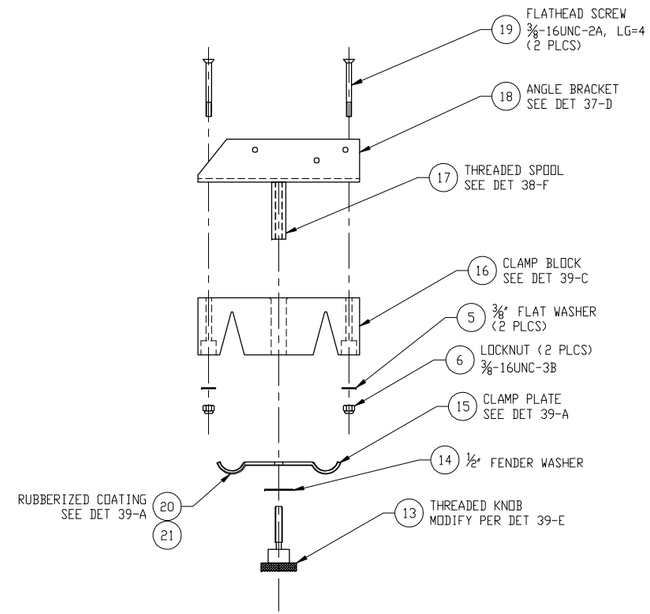

ASSEMBLY DETAIL 37-A
SWEEP TRACK MONITOR
CLAMP ASSEMBLY
SCALE: 6"=1'-0"
(34-D)

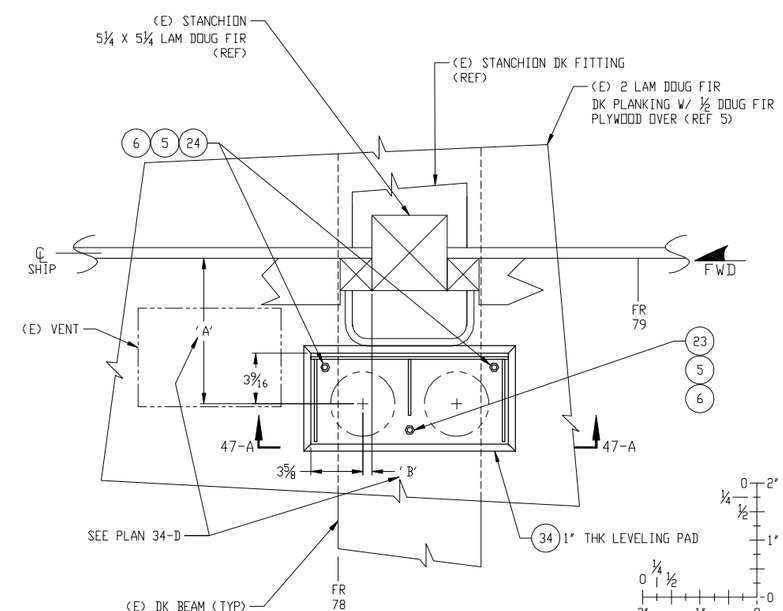

PLAN 34-A
INSTALLATION
SWEEP TRACK MONITOR
BASE ASSEMBLY
SCALE: 3"=1'-0"
(27-A)

BAR SCALE
(BAR SCALE SHOWN IS FOR REPRODUCTION DISTORTION IDENTIFICATION. BAR SCALE SHALL NOT BE USED FOR SCALING.)

MCM 13

SIZE	FSCM NO.	WT GRP	NAVSEA DRAWING NO.	REV
F	53711	476	8435910	-
SCALE:AS SHOWN		CODE/DEPT:250.45	SHEET 5	

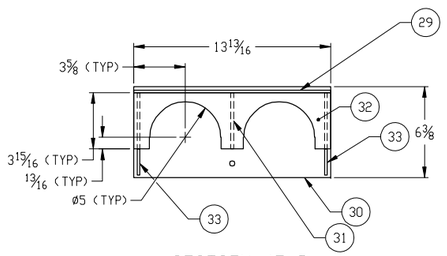

SECTION 47-D
SCALE: 3=1'-0"
(47-A)

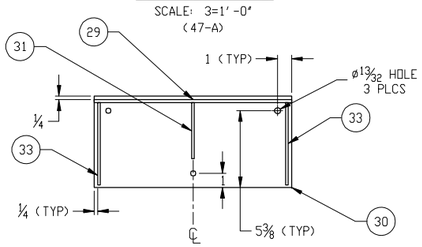

SECTION 47-C
SCALE: 3=1'-0"
(47-A)

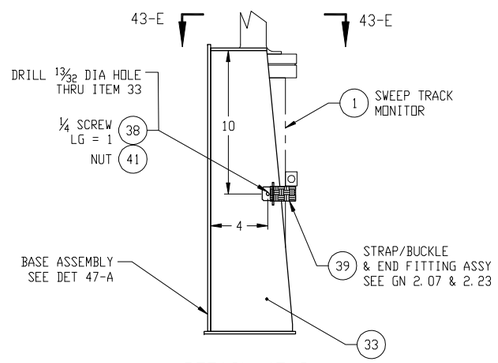

DETAIL 45-C
SWEEP TRACK MONITOR
STRAP ASSEMBLY
SCALE: 3=1'-0"
(27-A)

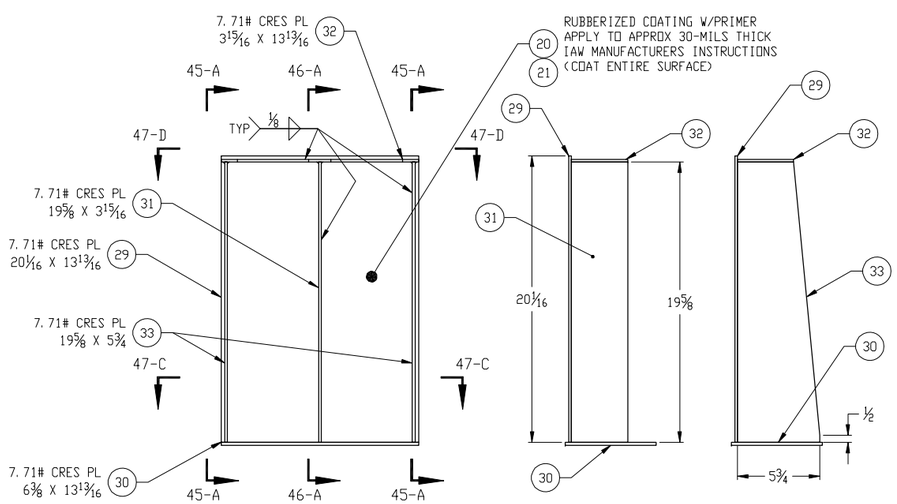

DETAIL 47-A
FABRICATION
SWEEP TRACK MONITOR
BASE ASSEMBLY
SCALE: 3=1'-0"
(34-A)

SECTION 46-A
SCALE: 3=1'-0"
(47-A)

SECTION 45-A
SCALE: 3=1'-0"
(47-A)

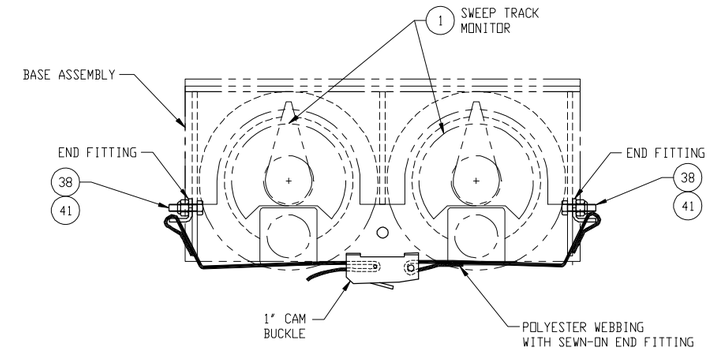

SECTION 43-E
SCALE: 6=1'-0"
(45-C)

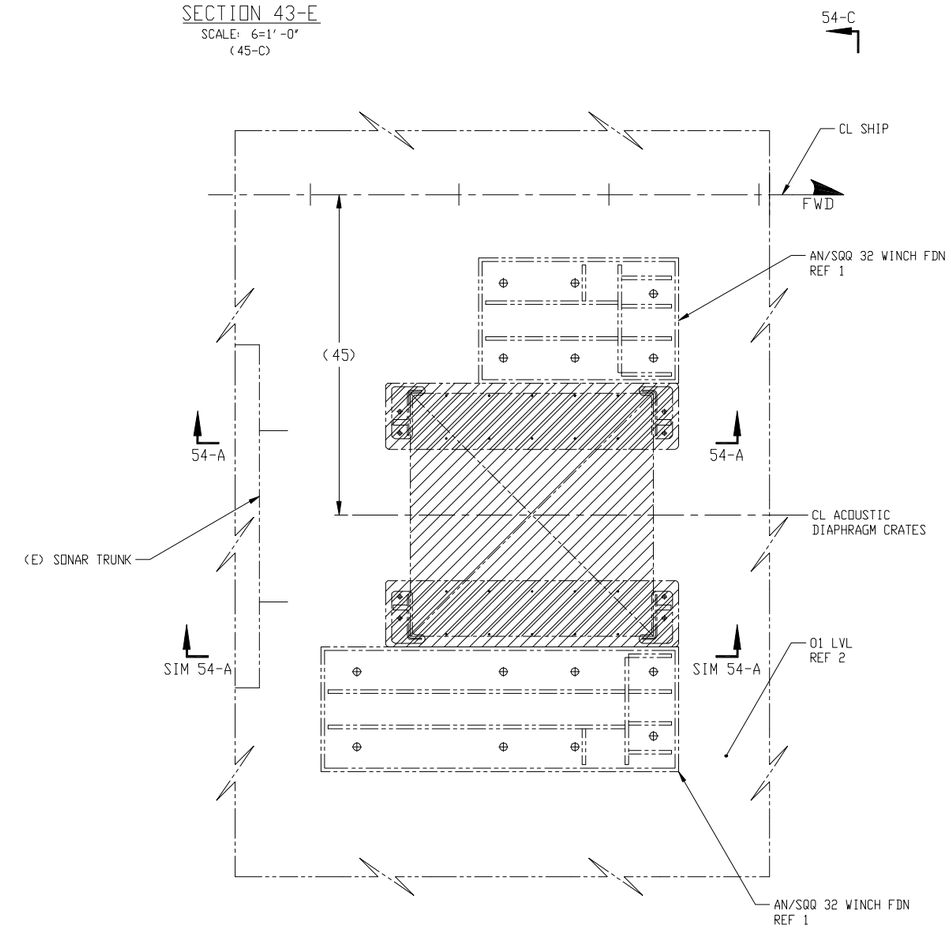

PLAN VIEW 42-A
STOWAGE FOR 3 CRATED
ACOUSTIC DIAPHRAGMS
SCALE: 1 1/2"=1'-0"
(12-C)

MCM 13

SIZE	FSCM NO.	WT GRP	NAVSEA DRAWING NO.	REV
F	53711	476	8435910	-
SCALE:AS SHOWN		CODE/DEPT:250.45	SHEET 6	

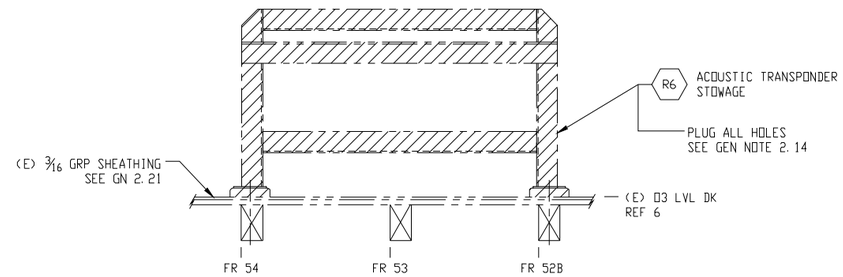

ELEVATION 54-E
ACOUSTIC TRANSPONDER STOWAGE REMOVAL
SCALE: 1½"=1'-0"
(15-C)

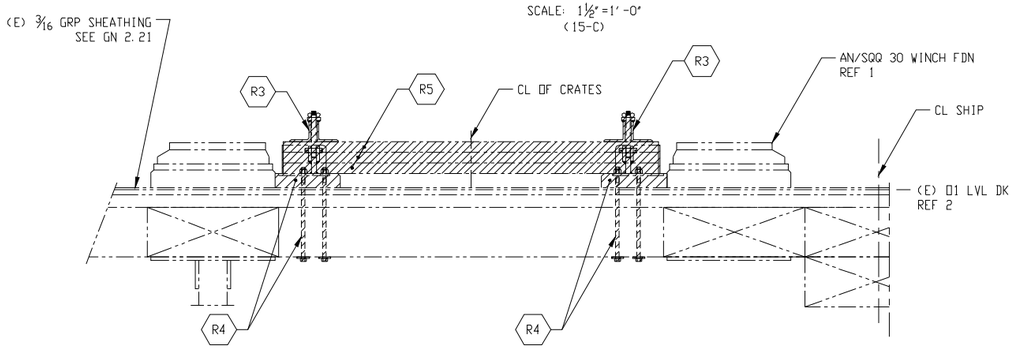

ELEVATION 54-C
STBD LKG AFT
SCALE: 1½"=1'-0"
(42-A)

TEST ALL PLUGGED HOLES THROUGH WT 01 LVL DECK IAW GEN NOTE 4.01.

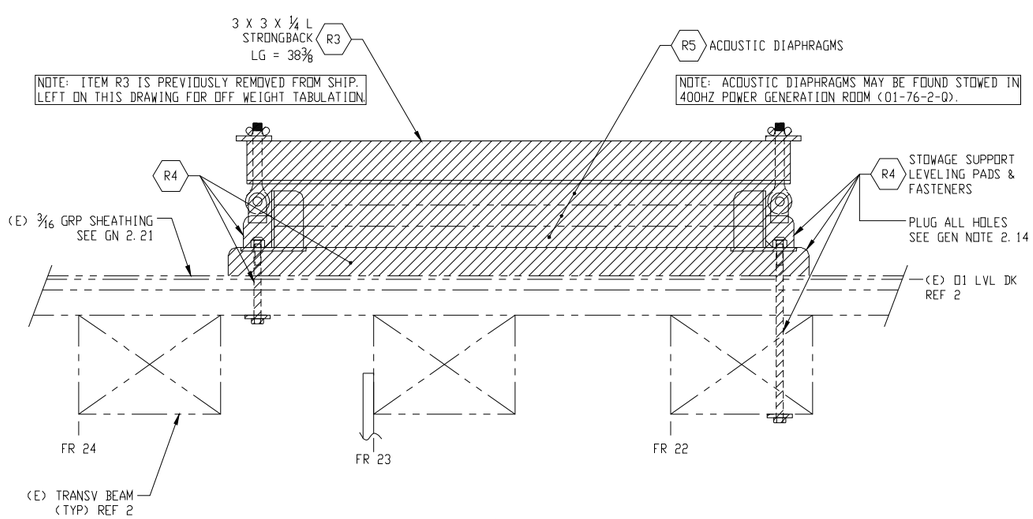

NOTE: ITEM R3 IS PREVIOUSLY REMOVED FROM SHIP. LEFT ON THIS DRAWING FOR OFF WEIGHT TABULATION.

NOTE: ACOUSTIC DIAPHRAGMS MAY BE FOUND STOWED IN 400HZ POWER GENERATION ROOM (01-76-2-G).

SECTION 54-A
LKG INBD
SCALE: 3"=1'-0"
(42-A)

LIST OF MATERIAL (QUANTITY FOR ONE SHIP)

ITEM NO	QTY REQD	DESCRIPTION	LAST NO. USED	PCS REQD	MATERIAL SPEC	MATL REQ	NSN/MFR PART NO.	APL/PN/ VIEW NO.	SOURCE	WEIGHT UNIT	WEIGHT TOTAL	REMARKS
1	2 EA	MONITOR, SWEEP TRACK	-	-		VARIOUS		27-A	GFM	32	64	SEE GEN NOTE 2.24
2	0.4 FT	TUBING, ROUND 1 X 3/16 WALL LG = 4	-	1	ASTM A 269	CRES 304		31-C	IAF	1.6	0.6	
3	1 EA	CABINET, WALL MOUNTED 30W X 48H X 16D	-	-	COML	CRES	JAMESTOWN OR EQ S252-3016	21-D	IAF	50	50	SEE GEN NOTE 2.20
4	6 EA	SCREW, HEX, CAP 3/8-16UNC-2A X 3 LG	-	-	NASM35307	CRES GR-316	9Z5305-01-509-5255 MS35307-370S316	18-D	IAF	-		
5	32 EA	WASHER, FLAT, PLAIN 0.438 ID X 1.000 OD X 0.083 THK	-	-	FF-W-92, TYPE A GR-I, CL-B	CRES	9B5310-00-595-6057 MS15795-815	18D 31C 37A 34D 27A	IAF	-	0.3	PASSIVATED NSN ORDERS ONE HD
6	28 EA	NUT, HEX, SELF-LOCK 3/8-16UNC-3B	-	-	NASM25027	CRES	9B5310-00-050-6646 MS17830-6C	18D 31C 37A 34D 27A	IAF	-		PASSIVATED
7	6 EA	WASHER, FLAT, PLAIN 0.312 ID X 0.734 OD X 0.065 THK	-	-	FF-W-92, TYPE A GR-I, CL-B	CRES	9B5310-00-880-5977 MS15795-811	10-E	IAF	-		PASSIVATED NSN ORDERS ONE HD
8	6 EA	SCREW, HEX, CAP 1/4-20UNC-2A X 3/8 LG	-	-		CRES	9B5305-00-576-6107 MS35307-301	10-E	IAF	-		
9	12 EA	TERMINAL, LUG 6 GAGE	-	-		COPPER	9B5940-00-557-4344 MS25036-120	10-E	IAF	-		NSN ORDERS ONE PKG OF 25 EACH PER PACKAGE
10	60 FT	WIRE, 6 GAGE	-	-	SEE REMARKS	VARIOUS		10-E	IAF	-		MIL-W-16878/16-BPL COLOR GREEN
11	1 EA	COMPOUND, SEALING	-	-	MIL-S-45180 TY II	RESIN	9Q8030-00-252-3391	10-E	IAF	-		U/I=11 OZ TUBE
12	1 EA	COMPOUND, ANTI-SEIZE	-	-	MIL-PRF-907	VARIOUS	8030-01-398-1714	10-E	IAF	-		ONE PINT CAN
13	2 EA	KNOB, THREADED STUD, 1/2-13UNC-2A, L=3" 2 1/2" DIA KNURLED HEAD	-	-	COML	CRES TYPE-303	MCMASTER-CARR PT# 6091K57	37-A	IAF	1	2	MODIFY PER DET 39-E SEE GEN NOTE 2.20
14	2 EA	WASHER, FENDER, 1/2" NOMINAL .531" ID X 2.0" OD X .06 THK	-	-	COML	CRES TYPE-316	9B5310-01-479-4027 NSN ORDERS ONE HD	37-A	IAF	-		MCMASTER-CARR PN 91525A150, SEE GN 2.20
15	0.4 SF	PLATE, 7.71# (3/16 THK) 3 X 9-1/2	-	2		CRES TYPE-316L		39-A	MN	7.7	3.1	CUT FROM ITEM 36
16	2 EA	LUMBER, 4 X 3 X 11-5/16	-	-	MM-L-736C TYPE-1	HARD MAPLE OR OAK		39-C	IAF	5	10	COAT W/POLYURETHANE SATIN FINISH, GN 2.18
17	2 EA	SPOOL, INTERNAL THREAD, 1/2-13UNC-2B LG=4	-	-		CRES TYPE-316L		38-F	MN	0.8	1.5	CUT FROM ITEM 37
18	2 FT	ANGLE, 3 X 3 X 1/4, LG = 11-5/16	-	2	ASTM A 276 COND-A, HF	CRES 316L		37-D	IAF	4.9	9.8	
19	4 EA	SCREW, FLAT HD, CAP, 3/8-16UNC-3A LG=4	-	-	COML	CRES TYPE-316	MCMASTER-CARR PT# 90585A641	37-A	IAF	-		SEE GEN NOTE 2.20
20	2 EA	RUBBERIZED COATING (SEE GEN NOTE 2.20)	-	-	COML	RUBBER	MCMASTER_CARR PT# 9560T4, BLACK	39-A & 47-A	IAF	-		11-OZ AEROSOL CAN APPLY TO 30 MILS THICK
21	1 EA	PRIMER, GRAY (FOR ITEM 20)	-	-	COML		MCMASTER-CARR PT# 9560T81	39-A & 47-A	IAF	-		1-QUART CAN SEE GEN NOTE 2.20
22	6 EA	SCREW, HEX, CAP 3/8-16UNC-2A X 6 LG	-	-	MIL-DTL-1222 TYPE-I, GR-316A	CRES	M1222RN6C296SCNN	34-D	IAF	-		
23	1 EA	THREADED RND BAR, 3/8-16UNC-2A THREADED 2-INCHES EA END, LG = 12-1/2	-	-		CRES TYPE-316L		27-A	MN	0.4	0.4	CUT FROM ITEM 35
24	2 EA	THREADED RND BAR, 3/8-16UNC-2A THREADED 2-INCHES EA END, LG = 5-1/4	-	-		CRES TYPE-316L		27-A	MN	0.2	0.3	CUT FROM ITEM 35
25	2 EA	THREADED RND BAR, 3/8-16UNC-2A THREADED 2-INCHES EA END, LG = 7	-	-		CRES TYPE-316L		31-C	MN	0.2	0.4	CUT FROM ITEM 35
26	1 EA	PLATE, 7.71# (3/16 THK) 5 X 7	-	-		CRES TYPE-316L		31-E	MN	1.8	1.8	CUT FROM ITEM 36
27	1 EA	PLATE, 7.71# (3/16 THK) 5 X 11-1/2	-	-		CRES TYPE-316L		29-E	MN	2	2	CUT FROM ITEM 36
28	1 EA	PLATE, 7.71# (3/16 THK) 3-13/16 X 9-3/4	-	-		CRES TYPE-316L		31-C	MN	1.3	1.3	CUT FROM ITEM 36
29	1 EA	PLATE, 7.71# (3/16 THK) 20-1/16 X 13-13/16	-	-		CRES TYPE-316L		47-A	MN	14.8	14.8	CUT FROM ITEM 36
30	1 EA	PLATE, 7.71# (3/16 THK) 6-3/8 X 13-13/16	-	-		CRES TYPE-316L		47-A	MN	4.7	4.7	CUT FROM ITEM 36
31	1 EA	PLATE, 7.71# (3/16 THK) 19-5/8 X 3-15/16	-	-		CRES TYPE-316L		47-A	MN	4.1	4.1	CUT FROM ITEM 36
32	1 EA	PLATE, 7.71# (3/16 THK) 3-15/16 X 13-13/16	-	-		CRES TYPE-316L		47-A	MN	1.4	1.4	CUT FROM ITEM 36
33	2 EA	PLATE, 7.71# (3/16 THK) 19-5/8 X 5-3/4	-	-		CRES TYPE-316L		47-A	MN	5	10	CUT FROM ITEM 36
34	1 EA	LUMBER, 14-13/16 X 7-3/8 X 1 THK	-	-	MM-L-736C TYPE-1	HARD MAPLE OR OAK		27-A	IAF	4	4	SEE GN 2.18 & 2.22
35	4 FT	BAR, ROUND, 3/8 DIA	-	-	ASTM A 276 COND A, HF	CRES TYPE-316			IAF	-		BULK MATERIAL FOR ITEMS 23, 24 & 25
36	6 SF	PLATE, 7.71# (3/16 THK)	-	-	ASTM-A-240 COND-A, FINISH-1	CRES TYPE-316L	9B9515-00-204-4624 NSN ORDERS 36 X 96		IAF	-		BULK MATERIAL FOR ITEMS 26 THROUGH 33 & 15
37	1 FT	BAR, ROUND, 1 DIA	-	-	ASTM A 276 COND A, HF	CRES 316L			IAF	-		MATERIAL FOR ITEM 17
38	2 EA	SCREW, HEX, CAP 1/4-20UNC-2A X 1 LG	-	-	NASM35307	CRES GR-316	MS35307-308S316	45-C	IAF	-		
39	1 EA	STRAP ASSEMBLY	-	-	COML	CRES/ POLYESTER		45-C	IAF	3	3	SEE GN 2.23
40	0.3 CF	BLOCKING 1 X 3, C/F LG = 40	-	3	MIL-W-2038 GR-B TY-2 CL-2	DOUG FIR		21-D	IAF	34	10.2	
41	2 EA	NUT, HEX, SELF-LOCK 1/4-20UNC-3B	-	-	NASM25027	CRES	9Z5310-00-241-6604 MS17830-4C	45-C	IAF	-		PASSIVATED

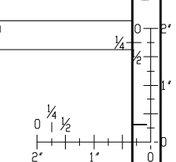

BAR SCALE
(BAR SCALE SHOWN IS FOR REPRODUCTION DISTORTION IDENTIFICATION. BAR SCALE SHALL NOT BE USED FOR SCALING.)

MCM 13

SIZE	FSCM NO.	WT GRP	NAVSEA DRAWING NO.	REV
F	53711	476	8435910	-
SCALE:AS SHOWN		CODE/DEPT:250.45	SHEET 7	