REVISIONS				
ZONE	LTR	DESCRIPTION	DATE	APPROVED
	A	THIS CHANGE IMPLEMENTS NAVSSES ECP 072-91-5057, NAVY STANDARD RAM TENSIONER PROTOTYPE MANUFACTURING DESIGN CHANGES.	10/11/91	P. CONROY
	B	REVISED IAW PHD NSWC ECP 4M-00-1407	08/00	PG, CTB, RKT
	C	REVISED IAW PHD NSWC ECP S6-10-1498	1-10	

NOTES:

1. STOCK SIZE IN REMARKS COLUMN OF PARTS LIST IS NOMINAL WITHOUT MANUFACTURING ALLOWANCE. DIMENSIONS AND TOLERANCES CALLED OUT ON THE FACE OF THE DRAWING ARE MANDATORY.

(B) 2. AFTER FABRICATION AND BEFORE ENGRAVING, PASSIVATE IN ACCORDANCE WITH ASTM A967, TREATMENT NITRIC 2 OR 3, PRACTICE C – SALT SPRAY TEST.

(B) 3. BEFORE BENDING, CAUTION PLATE SHALL BE ENGRAVED IN ACCORDANCE WITH MIL-DTL-15024, TYPE B, WITH BLACK CHARACTERS ON A NATURAL BACKGROUND. CHARACTERS SHALL BE FILLED WITH PAINT AFTER BENDING. WHERE LOCATING DIMENSIONS ARE NOT GIVEN CHARACTERS AND LINES SHALL BE SYMMETRICAL ON PLATE AS SHOWN. ENGRAVED AREAS SHALL BE .008 INCH DEEP, MINIMUM.

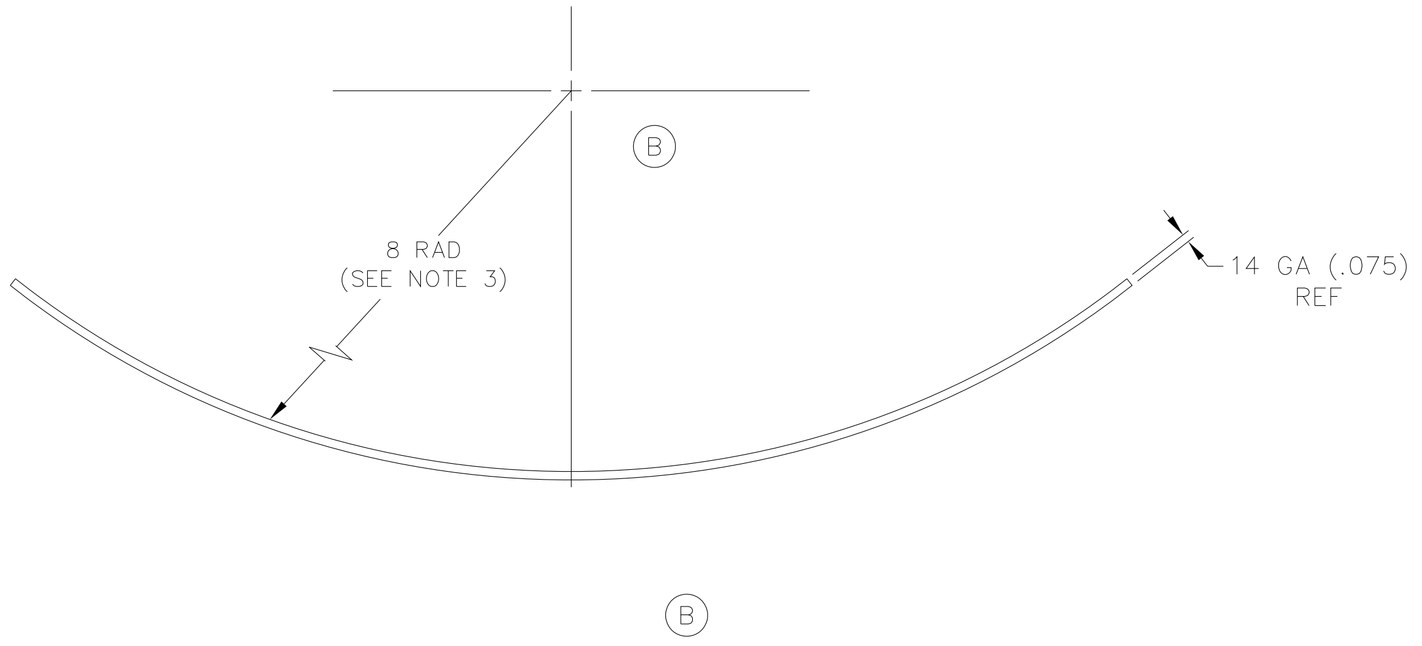

1	1			SHEET	10 X 6 X 14 GA
PART OR IDENTIFYING NO.	QTY REQD	CODE IDENT NO.	DRAWING OR SPECIFICATION	NOMENCLATURE OR DESCRIPTION	REMARKS

PARTS LIST

NOTICE OF CONFIGURATION CONTROL

THIS DRAWING DEFINES AN ITEM OF UNDERWAY REPLENISHMENT (UNREP) STANDARD HARDWARE. NO REVISION TO THIS DRAWING OR THE HARDWARE REPRESENTED BY IT IS AUTHORIZED WITHOUT THE WRITTEN APPROVAL OF THE NAVAL SEA SYSTEMS COMMAND.

DISTRIBUTION STATEMENT C: DISTRIBUTION AUTHORIZED TO U.S. GOVERNMENT AGENCIES AND THEIR CONTRACTORS: OTHER REQUESTS MUST BE REFERRED TO COMNAVSEA OR THE COGNIZANT NAVSEA CODE.

WARNING: THIS DOCUMENT CONTAINS TECHNICAL DATA WHOSE EXPORT IS RESTRICTED BY THE ARMS EXPORT CONTROL ACT (TITLE 22, U.S.C. SEC. 2751 ET SEQ.) OR EXECUTIVE ORDER 12470. VIOLATIONS OF THESE EXPORT LAWS ARE SUBJECT TO SEVERE CRIMINAL PENALTIES.

DESTRUCTION NOTICE: DESTROY BY ANY METHOD THAT WILL PREVENT DISCLOSURE OF CONTENTS OR RECONSTRUCTION OF THE DOCUMENT.

APPLICATION	
NEXT ASSY	USED ON
6519082	6519082
8287501	8287500

(C)

MATERIAL:
CRES PER ASTM A240
CLASS 316, CONDTN
ANNEALED
(B)

UNLESS OTHERWISE SPECIFIED:
ALL DIMENSIONS ARE IN INCHES
TOLERANCES: ANGLES±
FRACTIONS± 1/32
DECIMALS
.XX±
.XXX±.010
BEND RADII
FILLETS & ROUNDS
SURFACE FINISH 250
BREAK ALL SHARP EDGES
INTERPRET DRAWING IN ACCORDANCE WITH STANDARDS PRESCRIBED IN DOD-D-1000.
DO NOT SCALE THIS DRAWING

NAVAL SHIP SYSTEMS ENGINEERING STATION PHILADELPHIA, PA. 19112-5083		
PREPARED	MR & S, INC	9/13/89
CHECKED	P. GIACOBBE	10/04/89
SECT HD	M. DOWNS	10/19/89
BR HD	P. CONROY	11/13/89
ACCEPTED BY NAVSEA	P. CONROY 13 NOV 89 (SIGNATURE DOES NOT DENOTE APPROVAL)	
APPROVED FOR NAVSEA	(SIGN ONLY IF ENGINEERING HAS BEEN "PROVED" BY MANUFACTURE AND TEST)	

DEPARTMENT OF THE NAVY
NAVAL SEA SYSTEMS COMMAND
WASHINGTON DC 20360

NAVY STANDARD RAM TENSIONER, MODEL 120

PLATE, CAUTION, PHOSPHATE ESTER FLUID

SIZE	FSCM	SWBS	NAVSEA DWG NO	REV
D	53711	571	6519110	C

SCALE: FULL | UNIT WEIGHT: 1 LB | SHEET 1 OF 1

6519110 TC

NSWSES-4120/8 (REV 10-85)

NOTES:

1. STOCK SIZE IN REMARKS COLUMN OF PARTS LIST IS NOMINAL WITHOUT MANUFACTURING ALLOWANCE. DIMENSIONS AND TOLERANCES CALLED OUT ON THE FACE OF THE DRAWING ARE MANDATORY.

(B) 2. AFTER FABRICATION AND BEFORE ENGRAVING, PASSIVATE IN ACCORDANCE WITH ASTM A967, TREATMENT NITRIC 2 OR 3, PRACTICE C – SALT SPRAY TEST.

(B) 3. BEFORE BENDING, AIR BLEEDING PROCEDURE PLATE SHALL BE ENGRAVED IN ACCORDANCE WITH MIL-DTL-15024, TYPE B, WITH BLACK CHARACTERS ON A NATURAL BACKGROUND. CHARACTERS SHALL BE FILLED WITH PAINT AFTER BENDING. WHERE LOCATING DIMENSIONS ARE NOT GIVEN CHARACTERS AND LINES SHALL BE SYMMETRICAL ON PLATE AS SHOWN. ENGRAVED AREAS SHALL BE .008 INCH DEEP, MINIMUM.

REVISIONS				
ZONE	LTR	DESCRIPTION	DATE	APPROVED
	A	THIS CHANGE IMPLEMENTS NAVSSES ECP 072-91-5057, NAVY STANDARD RAM TENSIONER PROTOTYPE MANUFACTURING DESIGN CHANGES.	10/11/91	P. CONROY
	B	REVISED IAW PHD NSWC ECP 4M-00-1409	08/00	PG, CTB, RKT
	C	REVISED IAW PHD NSWC ECP S6-10-1498	1-10	

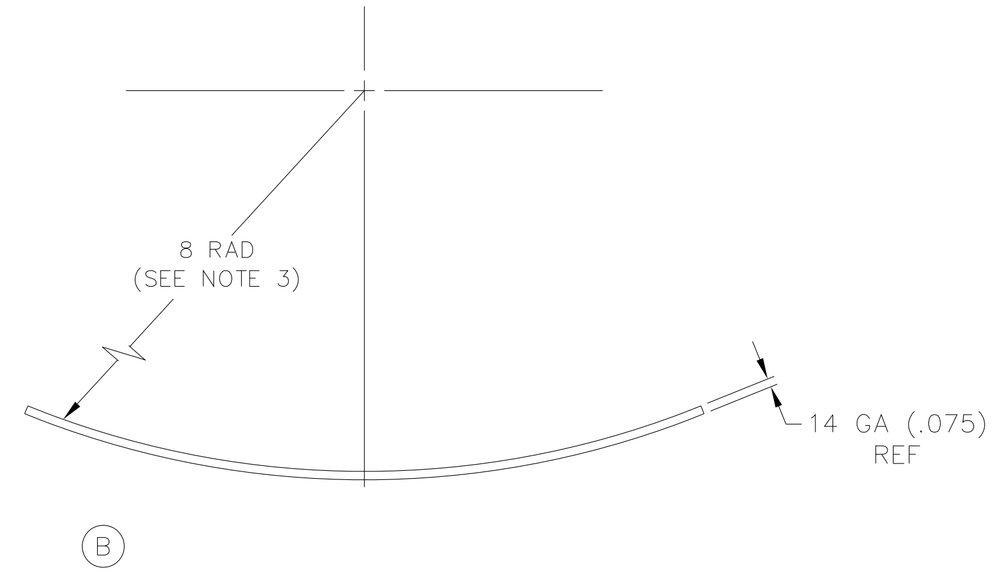

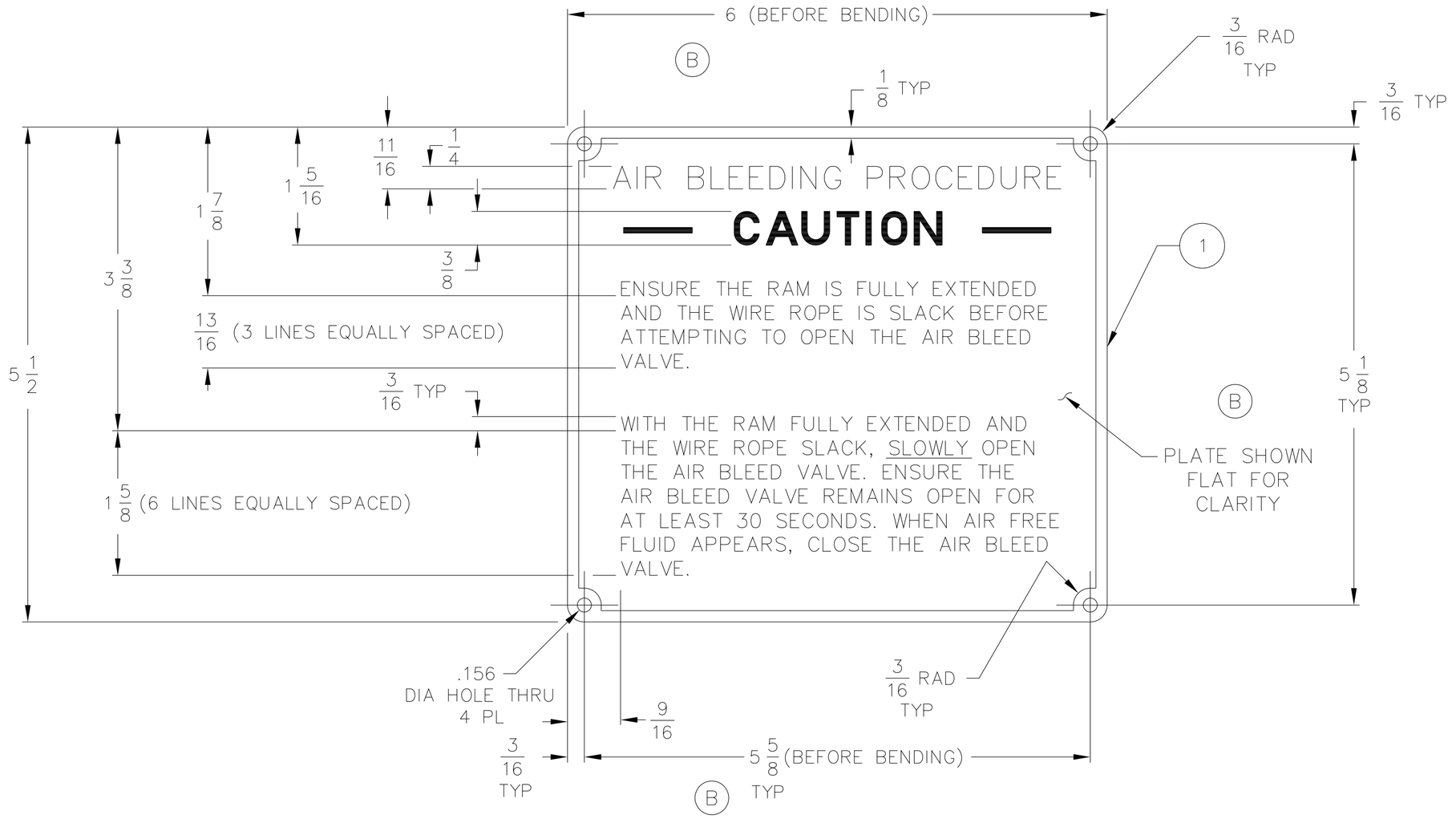

APPLICATION	
NEXT ASSY	USED ON
6519082	6519082
8287501	8287500

(C)

MATERIAL:
CRES PER ASTM A240, CLASS 316, CONDTN ANNEALED

(B)

1	1			SHEET	6 X 5-1/2 X 14 GA
PART OR IDENTIFYING NO.	QTY REQD	CODE IDENT NO.	DRAWING OR SPECIFICATION	NOMENCLATURE OR DESCRIPTION	REMARKS

PARTS LIST

UNLESS OTHERWISE SPECIFIED:
ALL DIMENSIONS ARE IN INCHES
TOLERANCES: ANGLES± FRACTIONS± 1/32
DECIMALS
.XX±
.XXX±.010
BEND RADII
FILLETS & ROUNDS
SURFACE FINISH 250
BREAK ALL SHARP EDGES

INTERPRET DRAWING IN ACCORDANCE WITH STANDARDS PRESCRIBED IN DOD-D-1000.

DO NOT SCALE THIS DRAWING

NAVAL SHIP SYSTEMS ENGINEERING STATION
PHILADELPHIA, PA. 19112-5083

PREPARED	MR & S, INC	9/13/89
CHECKED	P. GIACOBBE	10/12/89
SECT HD	M. DOWNS	10/20/89
BR HD	P. CONROY	11/13/89
ACCEPTED BY NAVSEA	P. CONROY	13 NOV 89
	(SIGNATURE DOES NOT DENOTE APPROVAL)	
APPROVED FOR NAVSEA		
	(SIGN ONLY IF ENGINEERING HAS BEEN "PROVED" BY MANUFACTURE AND TEST)	

DEPARTMENT OF THE NAVY
NAVAL SEA SYSTEMS COMMAND
WASHINGTON DC 20360

NAVY STANDARD RAM TENSIONER, MODEL 120

PLATE, AIR BLEEDING PROCEDURE

SIZE	FSCM	SWBS	NAVSEA DWG NO	REV
D	53711	571	6519112	C

SCALE: FULL | UNIT WEIGHT: 0.7 LB | SHEET 1 OF 1

6519112 TCJ

NOTICE OF CONFIGURATION CONTROL

THIS DRAWING DEFINES AN ITEM OF UNDERWAY REPLENISHMENT (UNREP) STANDARD HARDWARE. NO REVISION TO THIS DRAWING OR THE HARDWARE REPRESENTED BY IT IS AUTHORIZED WITHOUT THE WRITTEN APPROVAL OF THE NAVAL SEA SYSTEMS COMMAND.

DISTRIBUTION STATEMENT C: DISTRIBUTION AUTHORIZED TO U.S. GOVERNMENT AGENCIES AND THEIR CONTRACTORS: OTHER REQUESTS MUST BE REFERRED TO COMNAVSEA OR THE COGNIZANT NAVSEA CODE.

WARNING: THIS DOCUMENT CONTAINS TECHNICAL DATA WHOSE EXPORT IS RESTRICTED BY THE ARMS EXPORT CONTROL ACT (TITLE 22, U.S.C. SEC. 2751 ET SEQ.) OR EXECUTIVE ORDER 12470. VIOLATIONS OF THESE EXPORT LAWS ARE SUBJECT TO SEVERE CRIMINAL PENALTIES.

DESTRUCTION NOTICE: DESTROY BY ANY METHOD THAT WILL PREVENT DISCLOSURE OF CONTENTS OR RECONSTRUCTION OF THE DOCUMENT.

NOTES:

(D) 1. WELDING PROCESS AND PROCEDURE SHALL BE IN ACCORDANCE WITH NAVSEA S9074-AR-GIB-010/278, CLASS A-4, AND NAVSEA S9074-AQ-GIB-010/248.

2. METAL STAMP DRAWING NUMBER IN AREA SHOWN, WITH 1/8 INCH CHARACTERS, IN ACCORDANCE WITH MIL-STD-130.

3. STOCK SIZE IN REMARKS COLUMN OF PARTS LIST IS NOMINAL WITHOUT MANUFACTURING ALLOWANCE. DIMENSIONS AND TOLERANCES CALLED OUT ON THE FACE OF THE DRAWING ARE MANDATORY.

(D) 4. CONDUCT 100% LIQUID PENETRANT INSPECTION PER NAVSEA T9074-AS-GIB-010/271. NO CRACKS WILL BE ALLOWED.

(D) 5. PASSIVATE IN ACCORDANCE WITH ASTM A967. PASSIVATION TREATMENT SHALL BE DETERMINED USING ASTM A967, FIGURE X1.1.

6. AFTER PASSIVATING IN ACCORDANCE WITH NOTE 5, PAINT EXTERNAL SURFACES, WITH MATERIALS PROVIDED IN P/N 3, USING THE SPECIAL PROCEDURE FOR STAINLESS STEEL RAM TENSIONER PARTS. (B)

REVISIONS				
ZONE	LTR	DESCRIPTION	DATE	APPROVED
	A	THIS CHANGE IMPLEMENTS NAVSSES ECP 072-91-5057, NAVY STANDARD RAM TENSIONER PROTOTYPE MANUFACTURING DESIGN CHANGES.	10/11/91	P. CONROY
	B	THIS CHANGE IMPLEMENTS NSWC CD ECP 972-93-5073, NSRT DESIGN CHANGES.	5/11/95	L.GRIECO
	C	THIS CHANGE IMPLEMENTS NSWC CD ECP 972-96-5084, NSRT DESIGN CHANGES.	8/14/96	M. DOWNS
	D	REVISED IAW PHD NSWC ECP S6-10-1498	1-10	

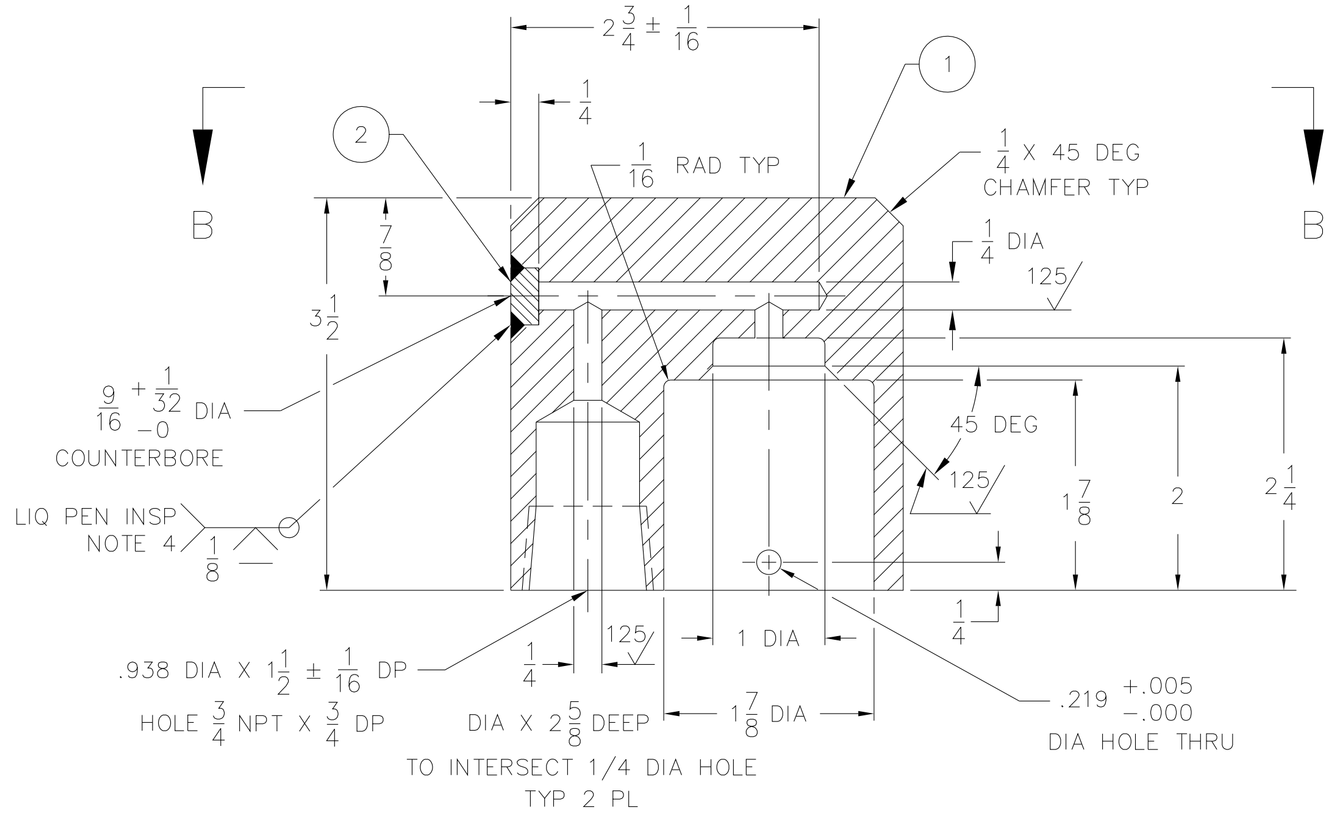

SECTION A-A

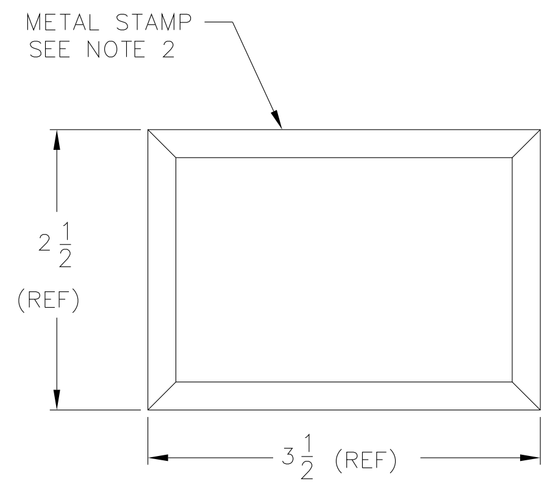

VIEW B-B

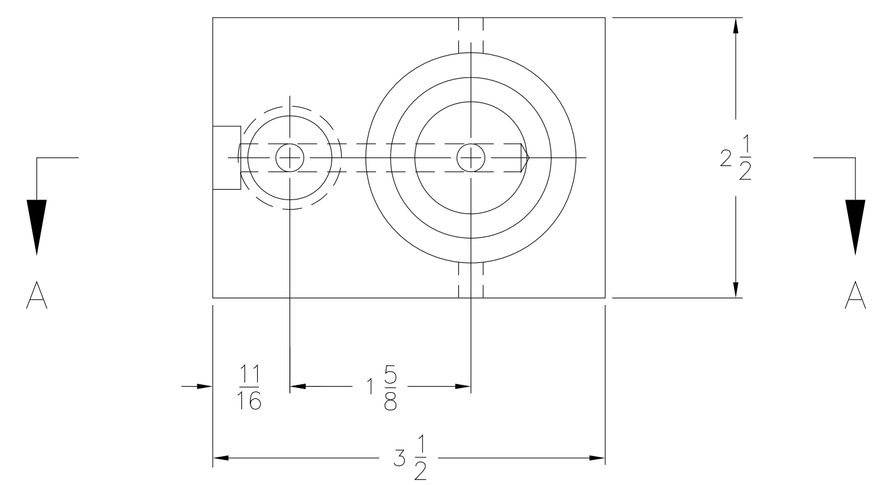

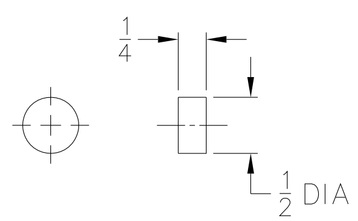

DETAIL OF P/N 2

PART OR IDENTIFYING NO.	QTY REQD	CODE IDENT NO.	DRAWING OR SPECIFICATION	NOMENCLATURE OR DESCRIPTION	REMARKS
3	AR	53711	5210545	STD PAINT PROC-UNREP	(SEE NOTE 6)
2	1			BAR, ROUND	1/2 DIA X 1/4 LG
1	1			BAR, SQUARE	3-1/2 X 3-1/2 X 2-1/2 THK

PARTS LIST

NOTICE OF CONFIGURATION CONTROL

THIS DRAWING DEFINES AN ITEM OF UNDERWAY REPLENISHMENT (UNREP) STANDARD HARDWARE. NO REVISION TO THIS DRAWING OR THE HARDWARE REPRESENTED BY IT IS AUTHORIZED WITHOUT THE WRITTEN APPROVAL OF THE NAVAL SEA SYSTEMS COMMAND.

DISTRIBUTION STATEMENT C: DISTRIBUTION AUTHORIZED TO U.S. GOVERNMENT AGENCIES AND THEIR CONTRACTORS: OTHER REQUESTS MUST BE REFERRED TO COMNAVSEA OR THE COGNIZANT NAVSEA CODE.

WARNING: THIS DOCUMENT CONTAINS TECHNICAL DATA WHOSE EXPORT IS RESTRICTED BY THE ARMS EXPORT CONTROL ACT (TITLE 22, U.S.C. SEC. 2751 ET SEQ.) OR EXECUTIVE ORDER 12470. VIOLATIONS OF THESE EXPORT LAWS ARE SUBJECT TO SEVERE CRIMINAL PENALTIES.

DESTRUCTION NOTICE: DESTROY BY ANY METHOD THAT WILL PREVENT DISCLOSURE OF CONTENTS OR RECONSTRUCTION OF THE DOCUMENT.

APPLICATION	
NEXT ASSY	USED ON
6519087	6519082
8287504	8287500
8287505	

(D)

MATERIAL:
P/N 1 AND P/N 2: (D) STAINLESS STEEL PER SAE AMS-QQ-S-763, CL 316L, CONDTN A (ANNEALED)

UNLESS OTHERWISE SPECIFIED:
ALL DIMENSIONS ARE IN INCHES
TOLERANCES: ANGLES± 5°
FRACTIONS± 1/32
DECIMALS
.XX± .005
.XXX± .005
BEND RADII
FILLETS & ROUNDS 250/
SURFACE FINISH √
BREAK ALL SHARP EDGES

INTERPRET DRAWING IN ACCORDANCE WITH STANDARDS PRESCRIBED IN DOD-D-1000.

DO NOT SCALE THIS DRAWING

NAVAL SHIP SYSTEMS ENGINEERING STATION PHILADELPHIA, PA. 19112-5083		
PREPARED	MR & S, INC	9/28/89
CHECKED	P. GIACOBBE	10/12/89
SECT HD	M. DOWNS	10/20/89
BR HD	P. CONROY	11/13/89
ACCEPTED BY NAVSEA	P. CONROY 13 NOV 89	
	(SIGNATURE DOES NOT DENOTE APPROVAL)	
APPROVED FOR NAVSEA		
	(SIGN ONLY IF ENGINEERING HAS BEEN "PROVED" BY MANUFACTURE AND TEST)	

DEPARTMENT OF THE NAVY
NAVAL SEA SYSTEMS COMMAND
WASHINGTON DC 20360

NAVY STANDARD RAM TENSIONER, MODEL 120

HOUSING, BREATHER

SIZE	FSCM	SWBS	NAVSEA DWG NO	REV
D	53711	571	6519140	D

SCALE FULL | UNIT WT 5 LBS | SHEET 1 OF 1

6519140 D

NOTES:

1. PRIOR TO ASSEMBLY REMOVE ALL CONTAMINANTS FROM SURFACES THAT WILL BE IN CONTACT WITH HYDRAULIC FLUID.

2. PRELUBRICATE O-RINGS BEFORE ASSEMBLY USING O-RING LUBRICANT, PC 40, BEFORE ASSEMBLY. PETROLEUM BASED O-RING LUBRICANT SHALL NOT BE USED OR SUBSTITUTED FOR PC 40.

3. APPLY ANTI-SEIZE COMPOUND, PC 39, TO ALL THREADED SURFACES PRIOR TO ASSEMBLY.

4. APPLY TOPCOAT WITH PROCEDURE AND MATERIAL IN PC 49 FOR ASSEMBLED RAM TENSIONER.

5. POSITION PC 13 AND DRILL TWO HOLES AS SHOWN IN SECTION S-S (SHEET 5). INSTALL PC 21 AND 27, WET. INSTALL LOCKWIRE, PC 38. MEASURE DISTANCE "X" IN SECTION S-S (SHEET 5) TO MACHINE SPACER, PC 12 AND INSTALL.

6. USE SEALANT, PC 41, ON CONTACTING SURFACES BEFORE ASSEMBLY WHERE SHOWN.

7. THE FOLLOWING ITEM(S) MAY BE PROCURED FROM THE VENDOR(S) LISTED.

7.1 PC 40: O-RING LUBRICANT (SILICONE),
APPROVED SOURCE OF SUPPLY:
PARKER HANNIFIN CORP, O-RING DIVISION
2360 PALUMBO DRIVE
LEXINGTON, KY 40509-1048
CAGE CODE: 02697
TRADE NAME: PARKER SUPER O-LUBE

7.2 PC 42: DRAW WIRE ENCODER C120 AND
PC 54: GUIDE PULLEY WITH BRACKET
APPROVED SOURCE OF SUPPLY:
KUBLER
GLOBAL INDUSTRIAL PRODUCTS INC.
8129 N AUSTIN AVE
MORTON GROVE, IL 60053-3204
CAGE CODE: 1UCT5

7.3 PC 45: 6MM SCREW PIN BOW SHACKLE (STAINLESS STEEL),
APPROVED SOURCE OF SUPPLY:
HARKEN INCORPORATED
1251 E WISCONSIN AVE
PEWAUKEE, WI 53072-3755
CAGE CODE: 0LEM6

7.4 PC 41 RTV ADHESIVE/SEALANT, SILICON RUBBER. FOLLOW MANUFACTURER'S INSTRUCTIONS FOR APPLICATION.
APPROVED SOURCE OF SUPPLY:
GENERAL ELECTRIC COMPANY
SILICONE PRODUCTS DEPT
WATERFORD, NY 12188
CAGE CODE: 01139 PART NUMBER: RTV-162

8. WHERE THIS NOTE IS REFERENCED, FAYING SURFACES OF ALUMINUM TO DISSIMILAR METALS SHALL RECEIVE A CHROMATE CHEMICAL CONVERSION COAT IN ACCORDANCE WITH MIL-DTL-5541, FOLLOWED BY ONE (1) COAT OF MIL-PRF-23377 APPLIED AT 0.5 TO 1.0 MILS. EACH METAL FAYING SURFACE SHALL BE PROTECTED BY TWO (2) COATS OF EPOXY POLYAMIDE PRIMER OF MIL-DTL-24441 OVER THE CHROMATE TREATED SURFACE. IN addition, TWO (2) LAYERS OF INSULATING TAPE, MIL-I-24391, SHALL BE INSTALLED BETWEEN THE SURFACES, AND SHALL EXTEND APPROXIMATELY 1/4 INCH BEYOND EDGE OF JOINT (MINIMUM OF 20 MILS FOR EACH LAYER). EXPOSED EDGES SHALL BE SEALED WITH CAULKING COMPOUND.

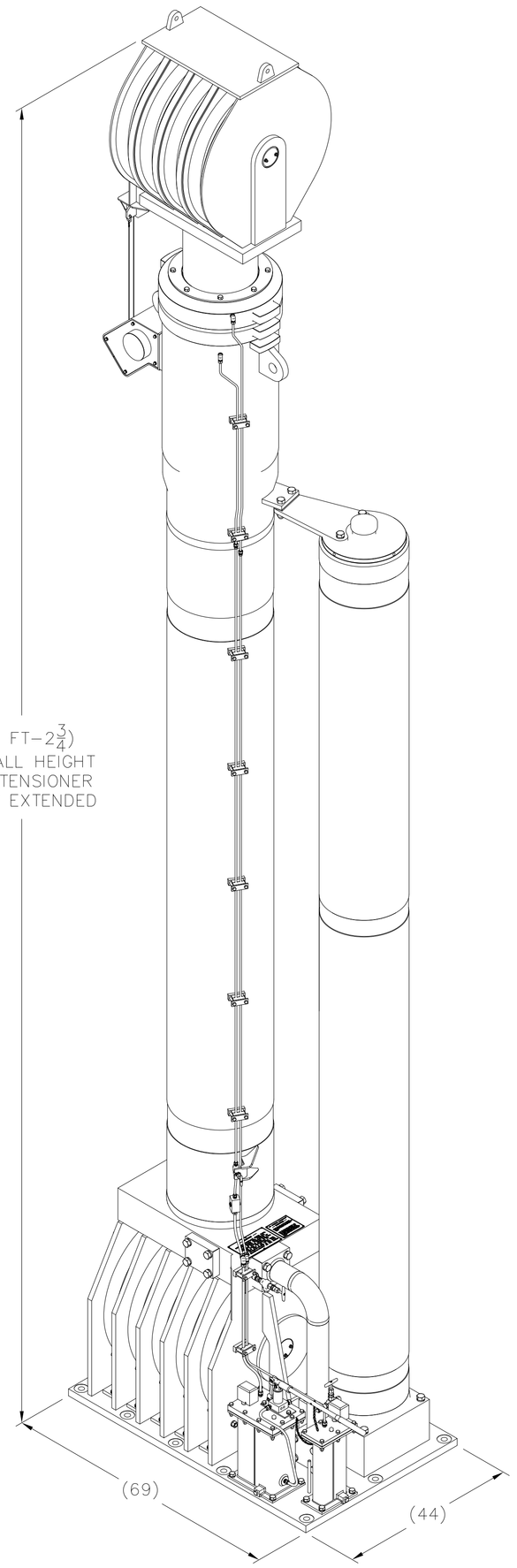

ISOMETRIC VIEW
SCALE: NONE

REVISIONS				
ZONE	LTR	DESCRIPTION	DATE	APPROVED

PART OR IDENTIFYING NO.	QTY REQD	CODE IDENT NO.	DRAWING OR SPECIFICATION	NOMENCLATURE OR DESCRIPTION	REMARKS
58	AR	–	MIL-I-24391C-04	ELEC PRES-SENSITIVE PLASTIC INSULATION TAPE	SEE NOTE 8
57	4	–	FF-W-92B	FLAT WASHER	#10 NOM. TY A, GR I , CL B
56	4	–	NASM35338-138	LOCK WASHER	#10 NOM
55	4	–	NASM16995-38	SOCKET HD-HEXAGON CAP SCREW	#10-24UNC-3A X 3/4
54	2	1UCT5	8.0000.7000.0045.DG1614	GUIDE PULLEY W/BRACKET	SEE NOTE 7
53	2	–	8287584-1	TUBING CUSHION CLAMP	
52	1	53711	8287602-2	ARC SENDING UNIT BRACKET COVER	RIGHT HAND
51	1	53711	8287602-1	ARC SENDING UNIT BRACKET COVER	LEFT HAND
50	AR	–	A-A-58092	PTFE ANTISEIZE TAPE	TY II, SIZE 1, 1/4 IN W
49	AR	53711	5210545	STD PAINT PROCEDURE-UNREP	SEE NOTE 4
48	7	–	8287584-2	TUBING CUSHION CLAMP	
47	5	–	SAE AMS7276	O-RING, FKM (VITON) 75 DURO, 3/8 OD TUBE	SAE AS568-906
46	1	53711	8287585	SIGHT INDICATOR GLASS	
45	2	0LEM6	2110	6MM SCREW PIN BOW SHACKLE	SEE NOTE 7
44	4	–	NASM35338-143	LOCK WASHER	1/2 NOM
43	10	–	NASM35338-141	LOCK WASHER	3/8 NOM
42	2	1UCT5	TD8.4C1.0600.6326.G221-C DG1614	DRAW WIRE ENCODER C120	SEE NOTE 7
41	AR	–	RTV 162	RTV ADHESIVE SEALANT	SEE NOTES 6 AND 7.4
40	AR	02697		O-RING LUBRICANT	SEE NOTES 2 AND 7
39	AR	–	MIL-PRF-907	ANTI-SEIZE COMPOUND	SEE NOTE 3
38	AR	–	NASM20995-C32	LOCKWIRE, .032 DIA	
37	4	–	MS51971-1	HEX NUT	1/4-20UNC
36	2	–	SAE J1926/4	HEX HD PLUG	9/16-18UNF
35	1	53711	8287516	STRAIGHT THREAD SWIVEL CONN	
34	5	–	SAE AMS7259	O-RING, FKM (VITON) 75 DURO	SAE AS568-158
33	1	–	SAE J1926/4	HEX HD PLUG	3/4-16UNF
32	1	53711	8287597	ANGLE GLOBE VALVE	
31	2	–	SAE AMS7259	O-RING, FKM (VITON) 90 DURO	SAE AS568-158
30	4	–	NASM35338-139	LOCK WASHER	1/4 NOM
29	2	–	MS51971-10	HEX NUT	1-8UNC
28	16	–	NASM35338-146	LOCK WASHER	3/4 NOM
27	16	–	NASM35338-148	SPRING LOCK WASHER	1 NOM
26	4	–	NASM35307-409	HEX HD SCREW	1/2-13UNC-2A X 1
25	10	–	NASM35307-331	HEX HD SCREW	3/8-16UNC-2A X 5/8
24	4	–	NASM35307-310	HEX HD SCREW	1/4-20UNC-2A X 1-1/4
23	8	–	MIL-DTL-1222	HEX HD SCREW, GR 5	TY II, 3/4-10UNC-2A X 4
22	2	–	NASM35307-540	HEX HD SCREW	1-8UNC-2A X 4-1/2
21	2	–	NASM35307-530	HEX HD SCREW, DRILLED	1-8UNC-2A X 2
20	4	–	MIL-DTL-1222	HEX HD SCREW	TY II, 1-8UNC-2A X 12
19	8	–	NASM35307-487	HEX HD SCREW	3/4-10UNC-2A X 2
18	4	–	NASM35307-542	HEX HD SCREW	1-8UNC-2A X 5
17	4	–	MIL-DTL-1222	HEX HD SCREW	TY II, 1-8UNC-2A X 10
16	1	53711	8287513	ARC SENDING UNIT BRACKET	
15	1	53711	8287551	RETURN TUBING ASSY	
14	1	53711	8287554	BLEED TUBING CONN ASSY	
13	1	53711	8287555	ACCUM BRACKET	
12	1	53711	8287556	SPACER	
11	1	53711	8287552	DISCHARGE TUBING ASSY	
10	1	53711	8287546	RAM CYL TO ACC PIPE ASSY	
9	1	53711	8287505	RETURN TANK ASSY	
8	1	53711	8287504	SUPPLY TANK ASSY	
7	1	53711	8287503	UPPER SHEAVE HOUSING ASSY	FOR 1-3/8 IN DIA WIRE ROPE
6	1	53711	8287553-1	GLOBE VALVE	
5	1	53711	8287502	ACCUMULATOR ASSY	
4	1	53711	8287501	TENSIONER CYLINDER ASSY	
3	1	53711	8287588-2	TUBE TO STR THD ELBOW ASSY	9/16-18UNF-2A
2	1	53711	8287558	UPPER BLEED TUBING ASSEMBLY	
1	1	53711	8287557	LOWER BLEED TUBING ASSEMBLY	

PARTS LIST

8287500

NOTICE OF CONFIGURATION CONTROL

THIS DRAWING DEFINES AN ITEM OF UNDERWAY REPLENISHMENT (UNREP) STANDARD HARDWARE. NO REVISION TO THIS DRAWING OR THE HARDWARE REPRESENTED BY IT IS AUTHORIZED WITHOUT THE WRITTEN APPROVAL OF THE NAVAL SEA SYSTEMS COMMAND.

DISTRIBUTION STATEMENT C: DISTRIBUTION AUTHORIZED TO U.S. GOVERNMENT AGENCIES AND THEIR CONTRACTORS; OTHER REQUESTS MUST BE REFERRED TO COMNAVSEA OR THE COGNIZANT NAVSEA CODE.

WARNING: THIS DOCUMENT CONTAINS TECHNICAL DATA WHOSE EXPORT IS RESTRICTED BY THE ARMS EXPORT CONTROL ACT (TITLE 22, U.S.C. SEC. 2751 ET SEQ.) OR EXECUTIVE ORDER 12470. VIOLATIONS OF THESE EXPORT LAWS ARE SUBJECT TO SEVERE CRIMINAL PENALTIES.

DESTRUCTION NOTICE: DESTROY BY ANY METHOD THAT WILL PREVENT DISCLOSURE OF CONTENTS OR RECONSTRUCTION OF THE DOCUMENT.

–	–	–	–	–	–
6	5	4	3	2	1

SHEET NUMBER

REVISION STATUS OF SHEETS

APPLICATION	
NEXT ASSY	USED ON
–	–

MATERIAL:

UNLESS OTHERWISE SPECIFIED:
ALL DIMENSIONS ARE IN INCHES
TOLERANCES: ANGLES± .5°
FRACTIONS±
DECIMALS
.XX± .02
.XXX±
BEND RADII
FILLETS & ROUNDS
SURFACE FINISH √
BREAK ALL SHARP EDGES
INTERPRET DRAWING IN ACCORDANCE WITH STANDARDS PRESCRIBED IN ASME Y14.100
DO NOT SCALE THIS DRAWING

PORT HUENEME DIVISION
NAVAL SURFACE WARFARE CENTER
4363 MISSILE WAY
PORT HUENEME, CA 93043-4307

PREPARED	AMSEC	06-07
CHECKED		
TECH LEAD		
BR HD		
ACCEPTED BY NAVSEA		(SIGNATURE DOES NOT DENOTE APPROVAL)
APPROVED FOR NAVSEA		(SIGN ONLY IF ENGINEERING WAS BEEN "PROVED" BY MANUFACTURE AND TEST)

DEPARTMENT OF THE NAVY
NAVAL SEA SYSTEMS COMMAND
WASHINGTON,D.C. 20376-5160

HEAVY UNREP-NAVY STANDARD
RAM TENSIONER

RAM TENSIONER ASSEMBLY

SIZE	CAGE CODE	NAVSEA DWG. NO.	REV
F	53711	8287500	–

SCALE NOTED | UNIT WT 36,900 LBS | SHEET 1 OF 5

NSWC 4120/1A (REV. 03-92)

NSNC 4120/1A (REV. 03-92)

SIZE	CAGE CODE	NAVSEA DWG. NO.	REV
F	53711	8287500	–

SCALE 1/12 | UNIT WT ——— | SHEET 2

8287500

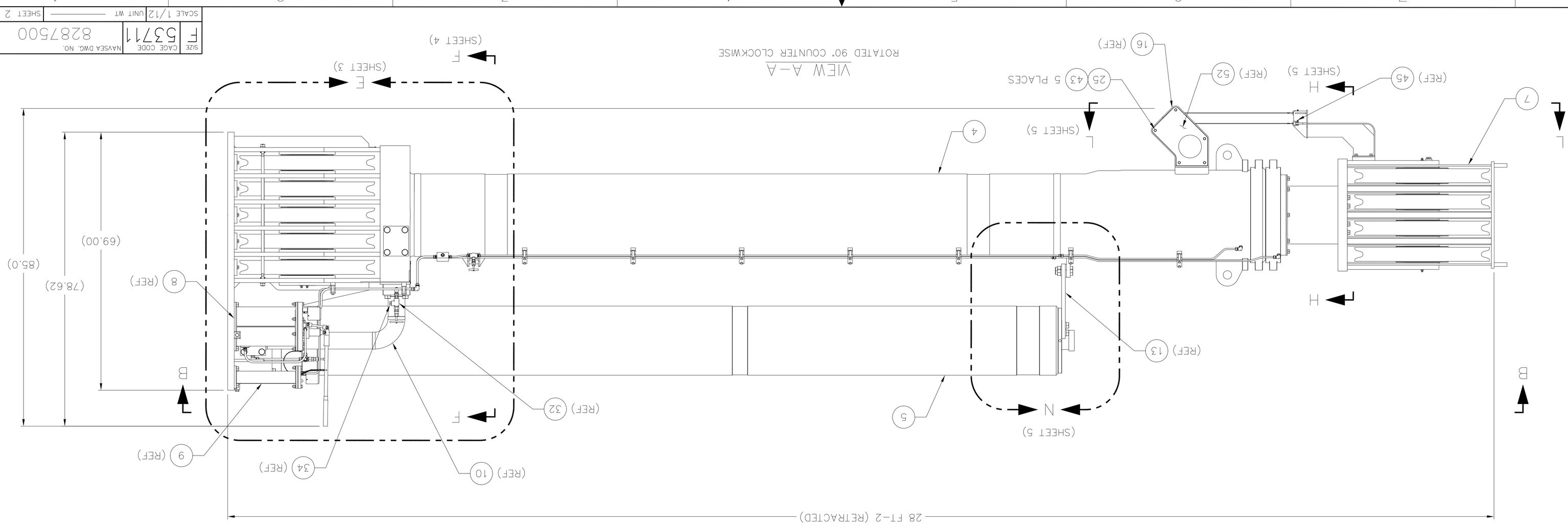

REVISIONS			
ZONE	LTR	DESCRIPTION	DATE	APPROVED

NSNC 4120/7A (REV. 01-92)

SIZE	CAGE CODE	NAVSEA DWG. NO.	REV
F	53711	8287500	—

SCALE 1/6 | UNIT WT ——— | SHEET 3

8287500

REVISIONS			
ZONE	LTR	DESCRIPTION	DATE	APPROVED

DETAIL E
ROTATED 90° CW
(A–A, SHEET 2)

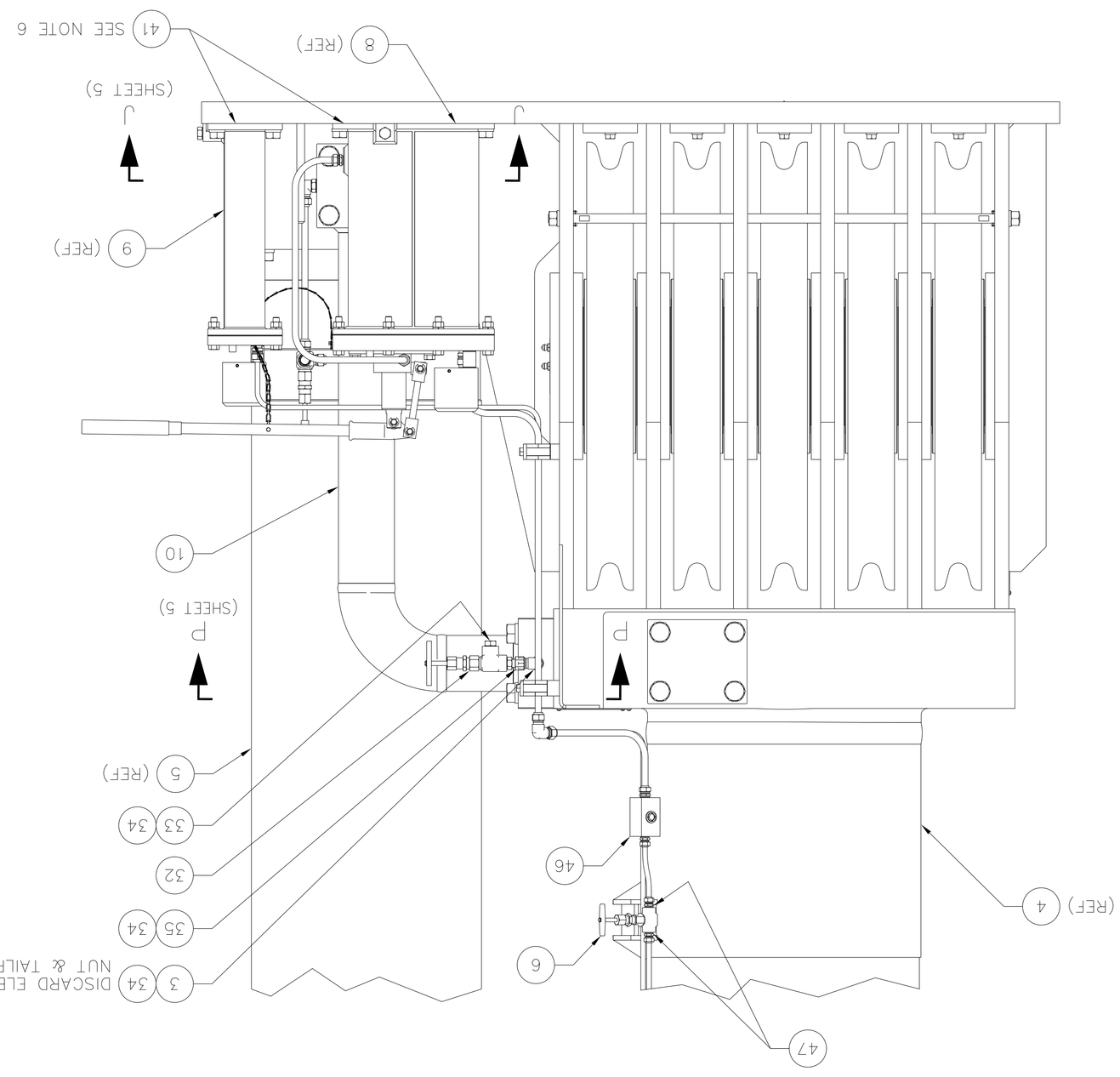

DETAIL D
ROTATED 90° CW
(B–B, SHEET 2)

4 PLACES

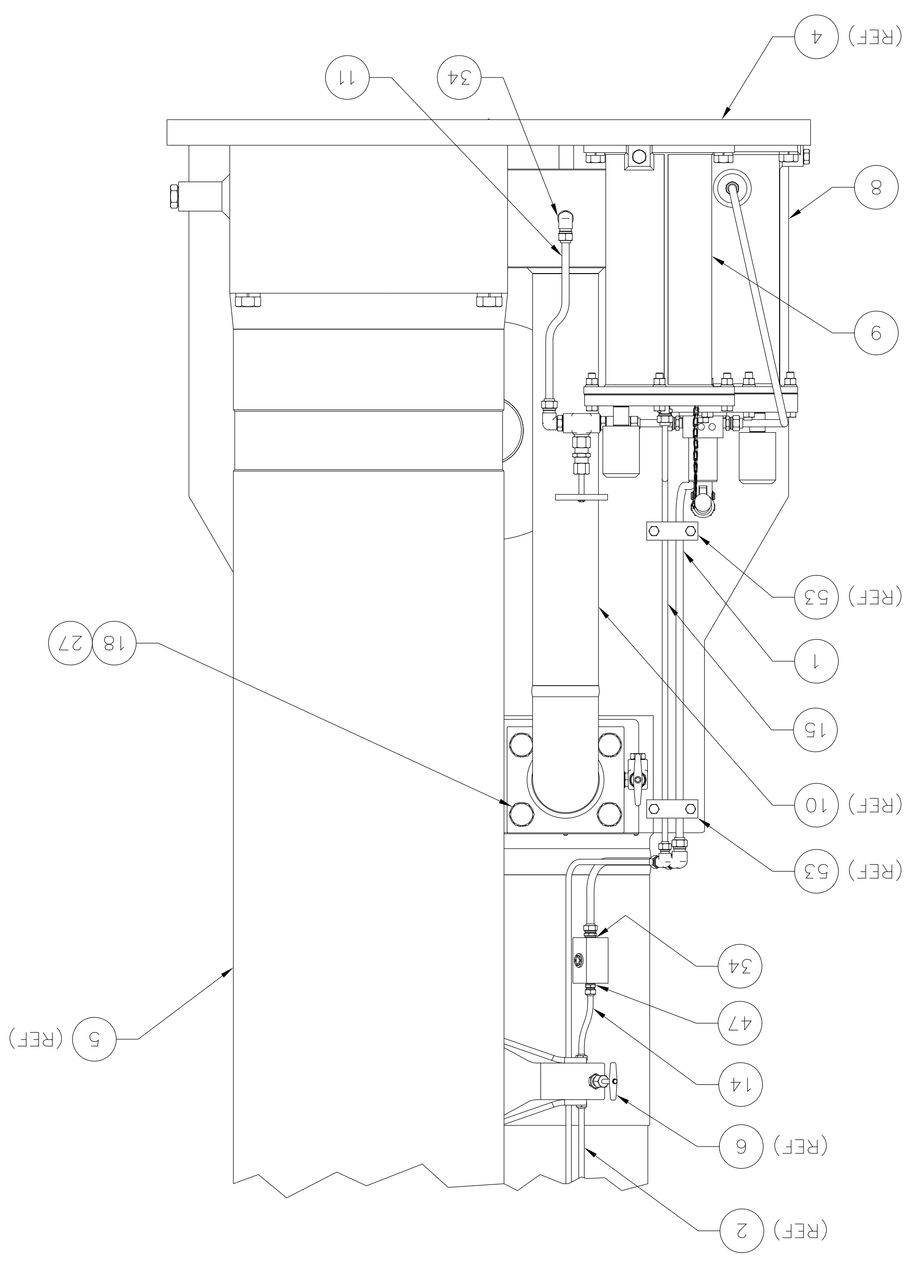

NSNC 4120/1A (REV. 03-92)

SIZE	CAGE CODE	NAVSEA DWG. NO.	REV
F	53711	8287500	—

SCALE NOTED | UNIT WT ——— | SHEET 4

SECTION F–F
ROTATED 180° CW
SCALE: 1/4
(A–A, SHEET 2)

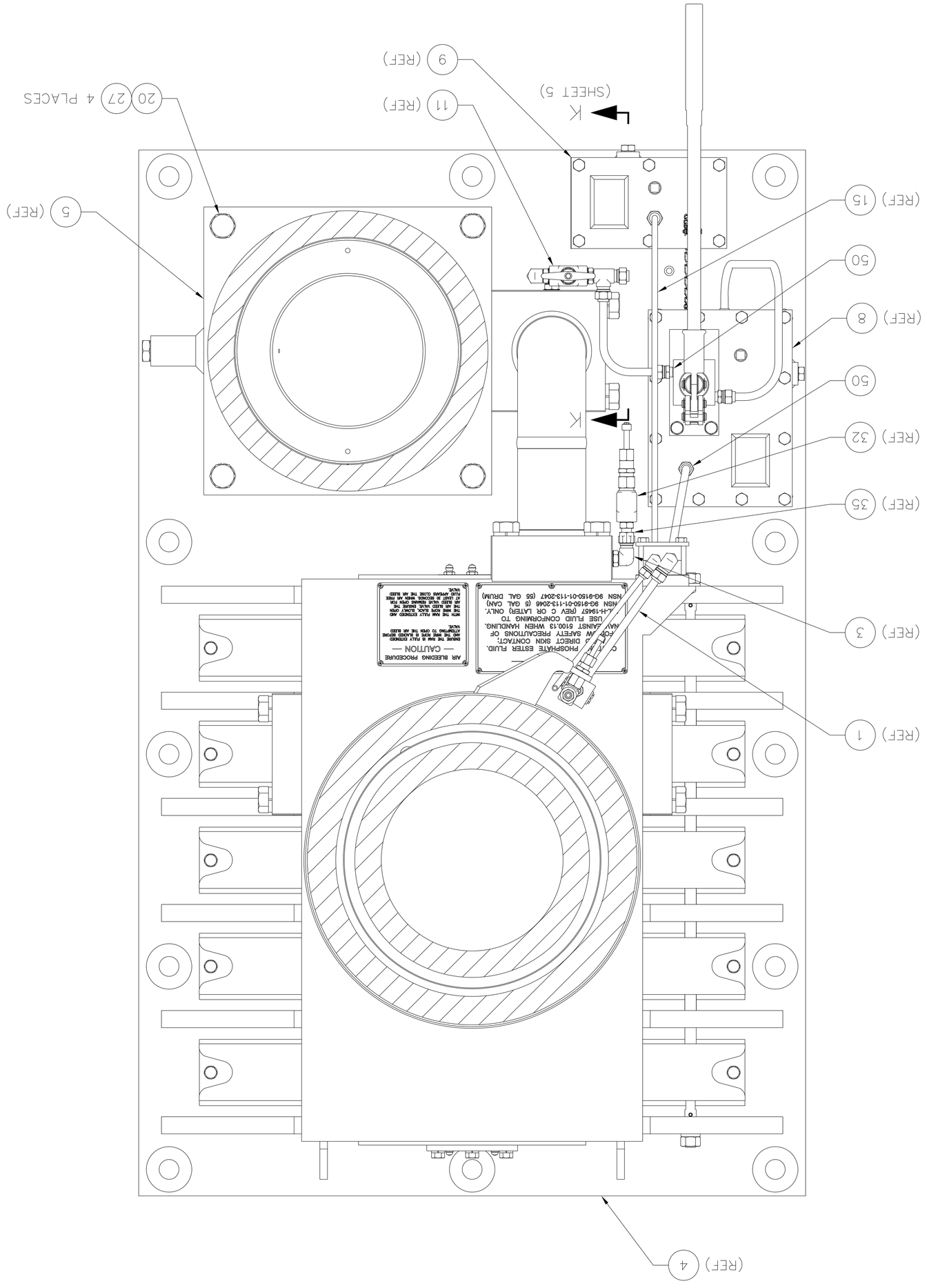

DETAIL C
ROTATED 90° CW
SCALE: 1/6
(B–B, SHEET 2)

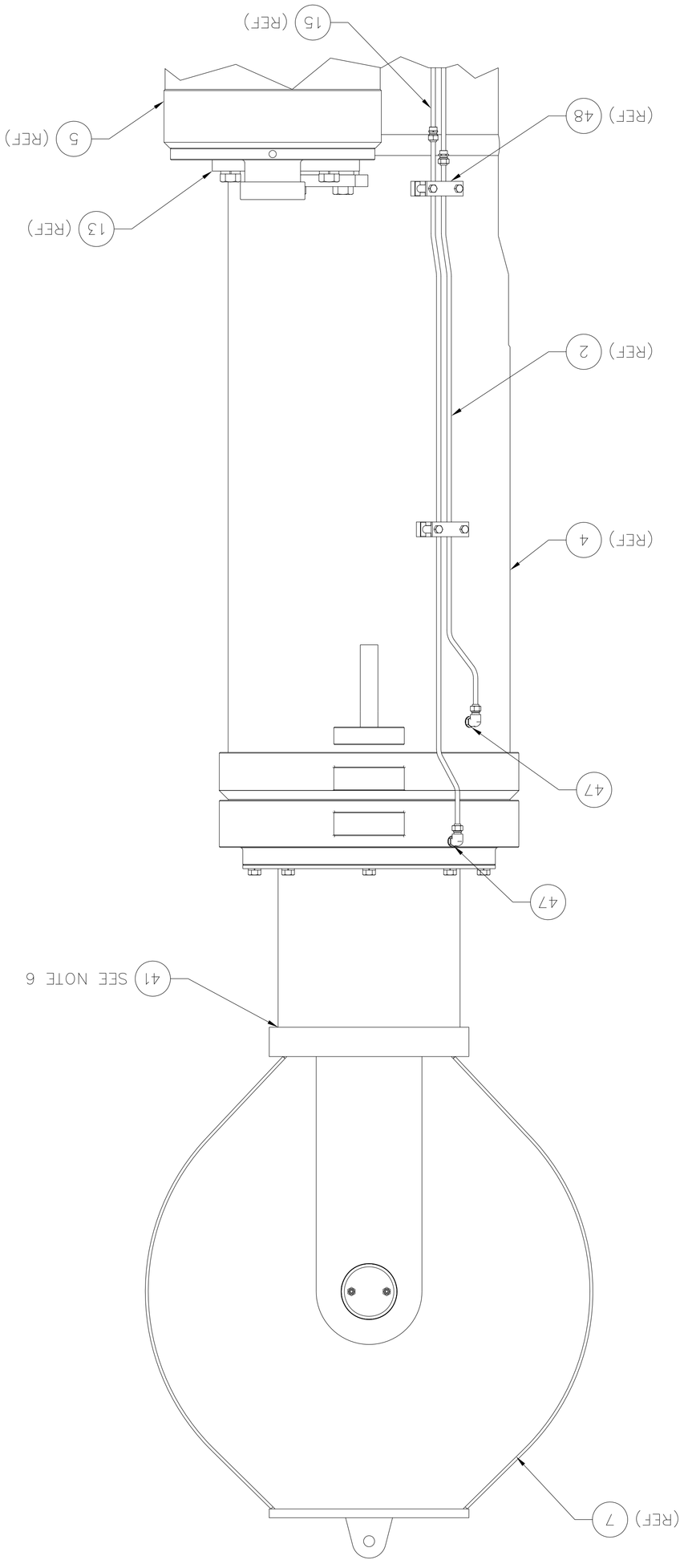

REVISIONS

ZONE	LTR	DESCRIPTION	DATE	APPROVED

REVISIONS				
ZONE	LTR	DESCRIPTION	DATE	APPROVED

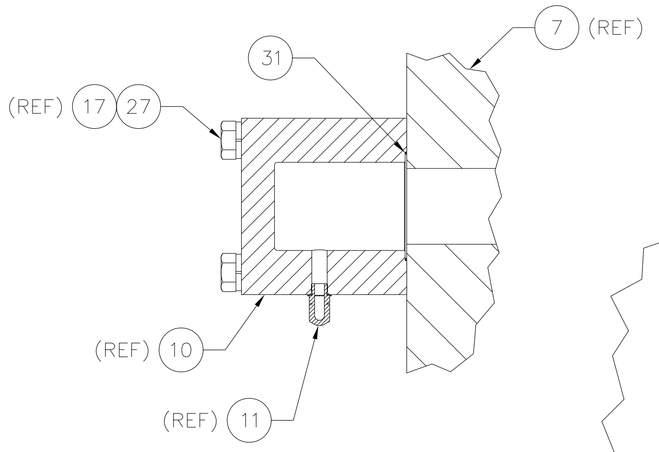

SECTION R–R
SCALE: 1/4
ROTATED 90° CW
(K–K)

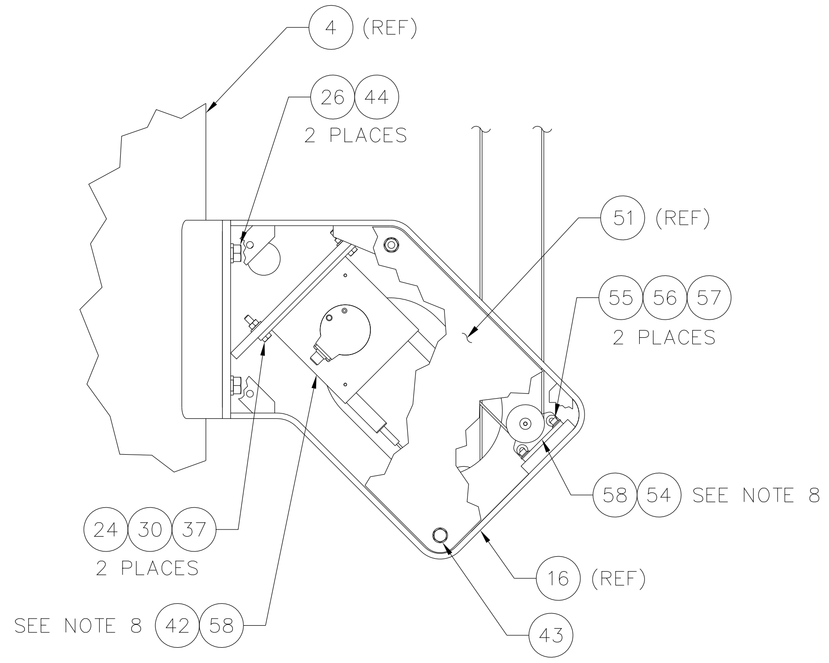

SECTION S–S
SCALE: 1/6
(L–L)

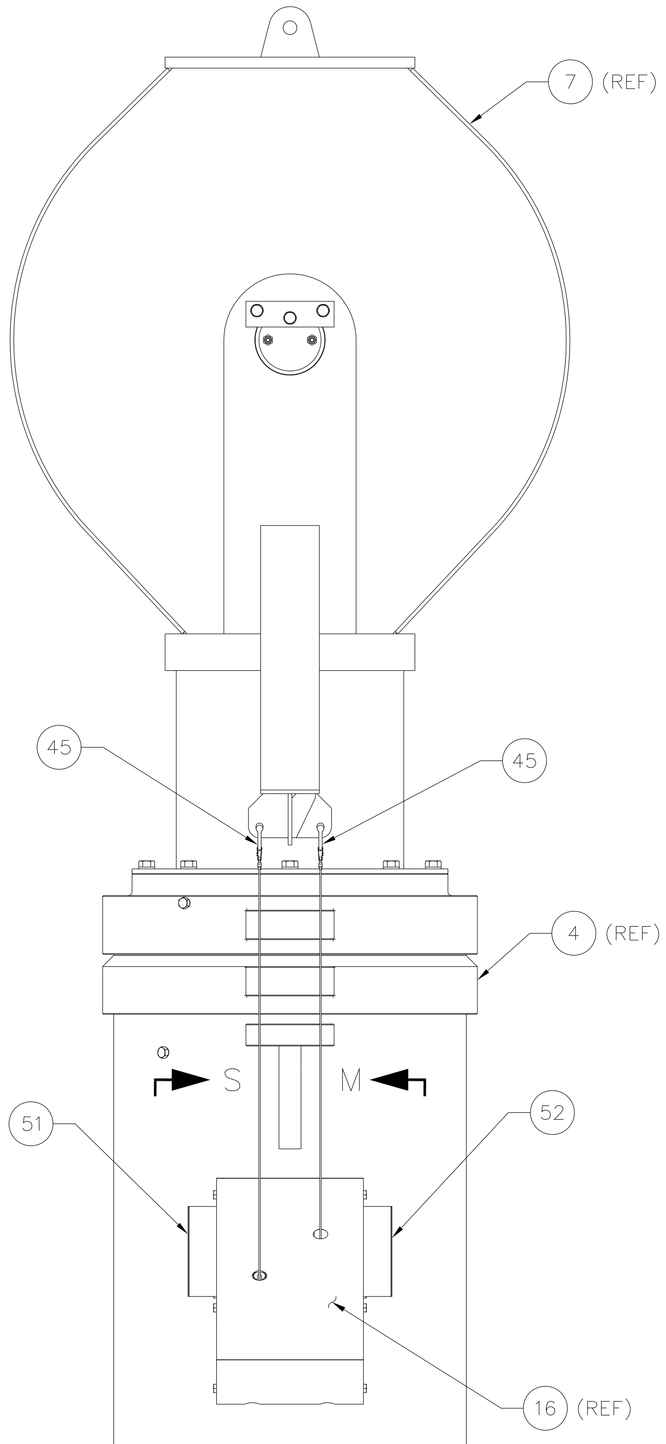

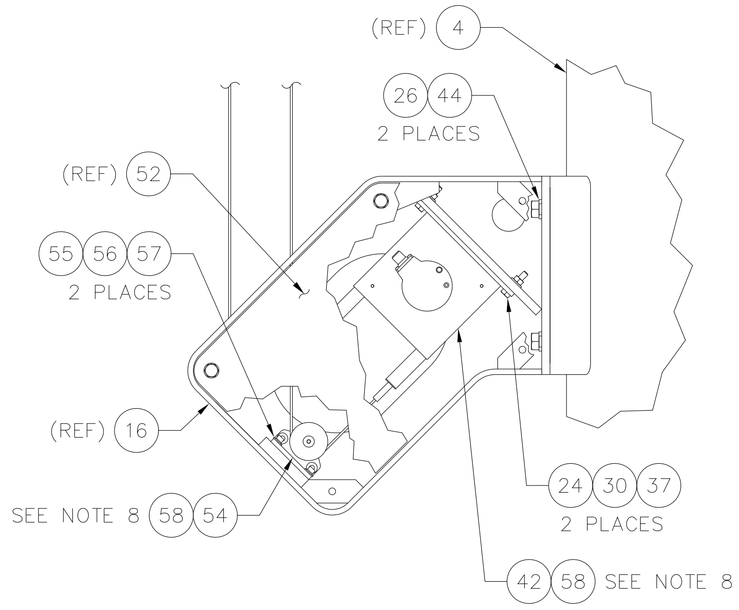

SECTION M–M
SCALE: 1/6
(L–L)

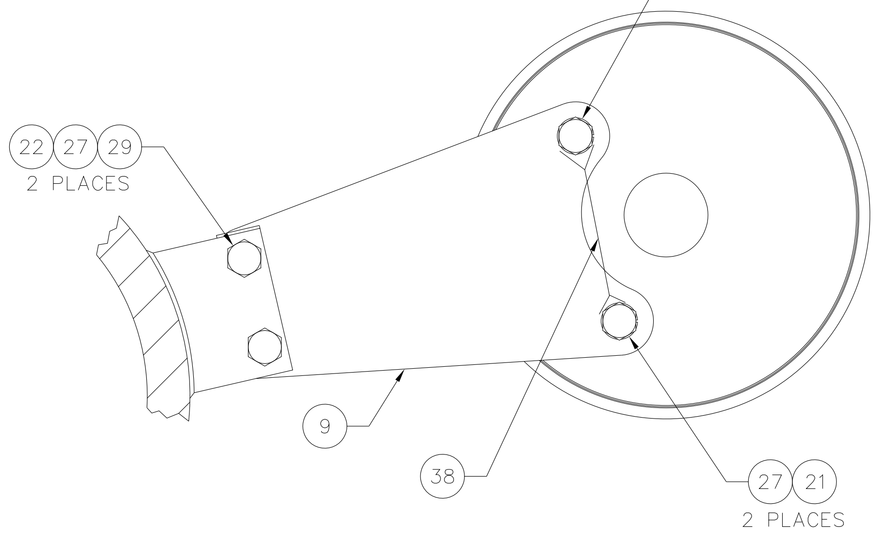

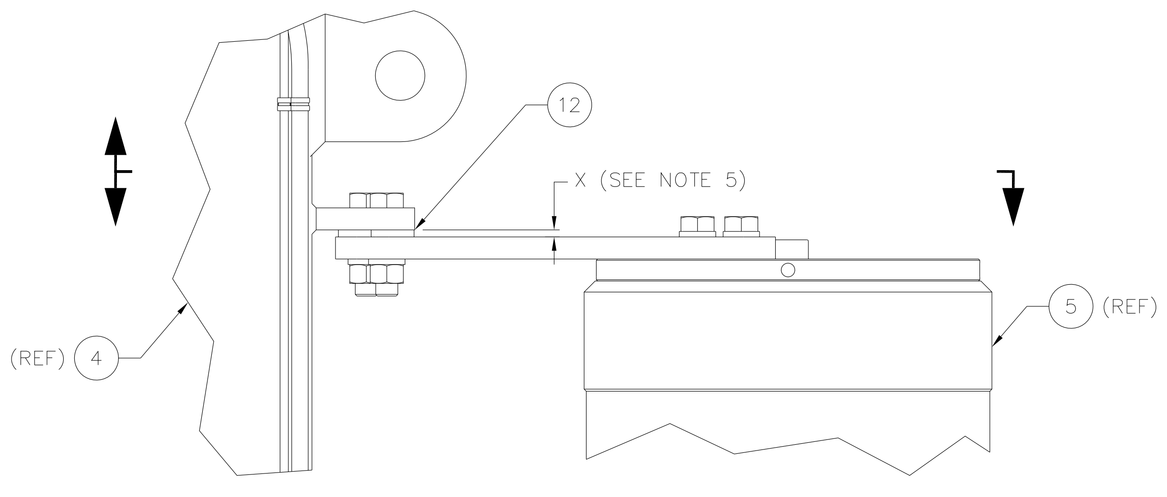

DETAIL N
SCALE: 1/4
ROTATED 90° CW
(A–A, SHEET 2)

SECTION L–L
SCALE: 1/6
(A–A, SHEET 2)

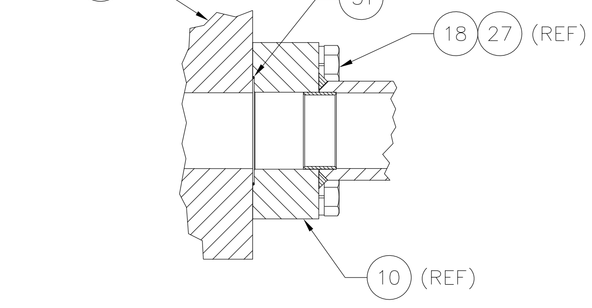

SECTION P–P
SCALE: 1/4
(E, SHEET 3)

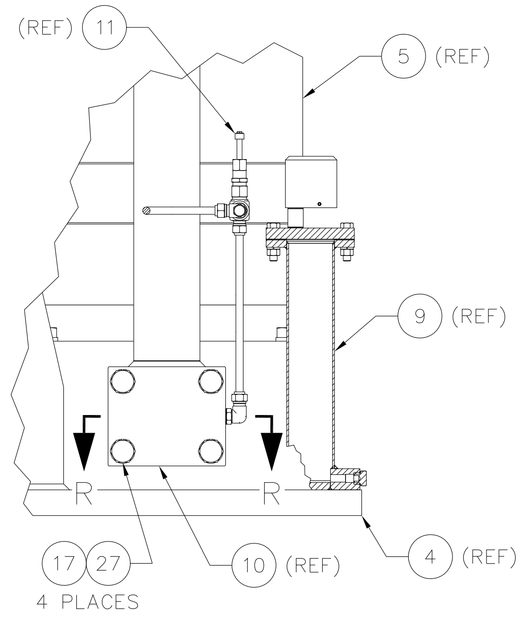

SECTION K–K
(F–F, SHEET 4)

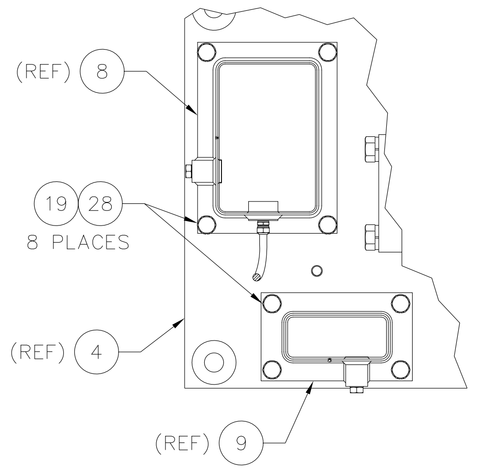

SECTION J–J
ROTATED 90° CW
(E, SHEET 3)

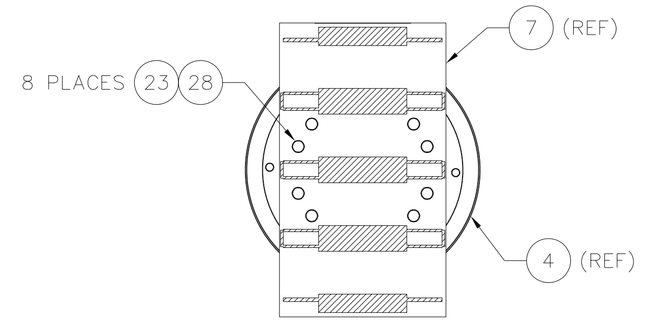

SECTION H–H
(A–A, SHEET 2)

8287500

SIZE	CAGE CODE	NAVSEA DWG. NO.	REV
F	53711	8287500	–
SCALE 1/12 OR NOTED	UNIT WT ———	SHEET 5	

NSWC 4120/1A (REV. 03-92)

NOTES:

1. SHEAVE ASSEMBLY, PC 2, IS GROOVED FOR 1-3/8 INCH WIRE ROPE.

2. PRELUBRICATE V-PACKING SEAL SET, PC 16, AND WIPER RINGS (INNER LIPS ONLY). PC 27, O-RINGS, PCS 21, 28 AND 29 BEFORE ASSEMBLY USING THE HYDRAULIC FLUID, PC 42, (MIL-H-19457, REV C OR LATER).

   WARNING: THIS HYDRAULIC FLUID, WHICH CONTAINS TERTIARY-BUTYLATED TRIPHENYL PHOSPHATE, IS TOXIC. AVOID SKIN CONTACT AND INHALING VAPORS. SEE NAVSEA INSTRUCTION 5100.13 FOR FURTHER PRECAUTIONS.

3. TORQUE ALL SCREWS AND BOLTS TO THE VALUES SHOWN IN TABLE 2.

4. SECURE SCREWS, PC 23, IN POSITION WITH LOCKWIRE, PC 40, SEE SECT J-J, IN ACCORDANCE WITH NASM 33540 USING THE DOUBLE-TWIST METHOD.

5. NAME PLATE AND INSTRUCTION PLATES, PC 43-45, SHALL BE INSTALLED AS FOLLOWS:
   POSITION PLATE ON THE SUPPORT STRUCTURE IN THE LOCATION SHOWN. DRILL .144 DIA HOLES THRU THE SUPPORT STRUCTURE USING THE PLATE AS A TEMPLATE. APPLY A LIBERAL AMOUNT OF RTV, PC 47, TO THE BACK OF THE PLATE. INSTALL THE PLATE USING DRIVE SCREWS, PC 46. WIPE OFF EXCESS RTV.

6. PRIOR TO ASSEMBLY, APPLY LED-PLATE ANTISEIZE COMPOUND, PC 41, TO ALL THREADS, SLIDING AND ROTATING SURFACES, AND WHERE UNPAINTED METAL-TO-METAL CONTACT EXISTS. FOLLOW MANUFACTURER'S INSTRUCTIONS FOR APPLICATION.

7. THE FOLLOWING ITEMS SHALL BE PROCURED FROM THE VENDOR LISTED. A SUBSTITUTE ITEM SHALL NOT BE USED WITHOUT PRIOR APPROVAL BY THE NAVY.

7.1 PC 41 ANTISEIZE COMPOUND, LED-PLATE
APPROVED SOURCE OF SUPPLY:
ARMITE LABORATORIES INC
1560 SUPERIOR AVE STE A4
COSTA MESA, CA 92627-3676
CODE IDENT: 84180
PART NO LP-250 (MEETS MIL-PRF-907)

7.2 PC 47 RTV ADHESIVE/SEALANT, SILICON RUBBER. FOLLOW MANUFACTURER'S INSTRUCTIONS FOR APPLICATION.
APPROVED SOURCE OF SUPPLY:
GENERAL ELECTRIC COMPANY
SILICONE PRODUCTS DEPT
WATERFORD, NY 12188
CAGE CODE: 01139 PART NUMBER: RTV-162

7.3 PC 49 AND 50 SOCKET HEAD CAP SCREW, ALLOY STEEL, APPROVED SOURCE OF SUPPLY:
UNBRAKO STOCK NO 14888
SPS TECHNOLOGIES
UNBRAKO, ENGINEERING FASTENERS
4444 LEE RD
CLEVELAND, OHIO, 44128-2902
TEL (216) 581-3000. FAX (800) 225-5777.

8. BULK ITEM (PC 41, 42 AND 47) FIND NUMBERS ARE NOT SHOWN ON THE FACE OF THE DRAWING.

TABLE 2
TORQUE VALUES
CLASS 2 FIT

BOLT SIZE	TORQUE: FT/LB
1/2-13 UNC CRES	45
1-8 UNC GR 5	640

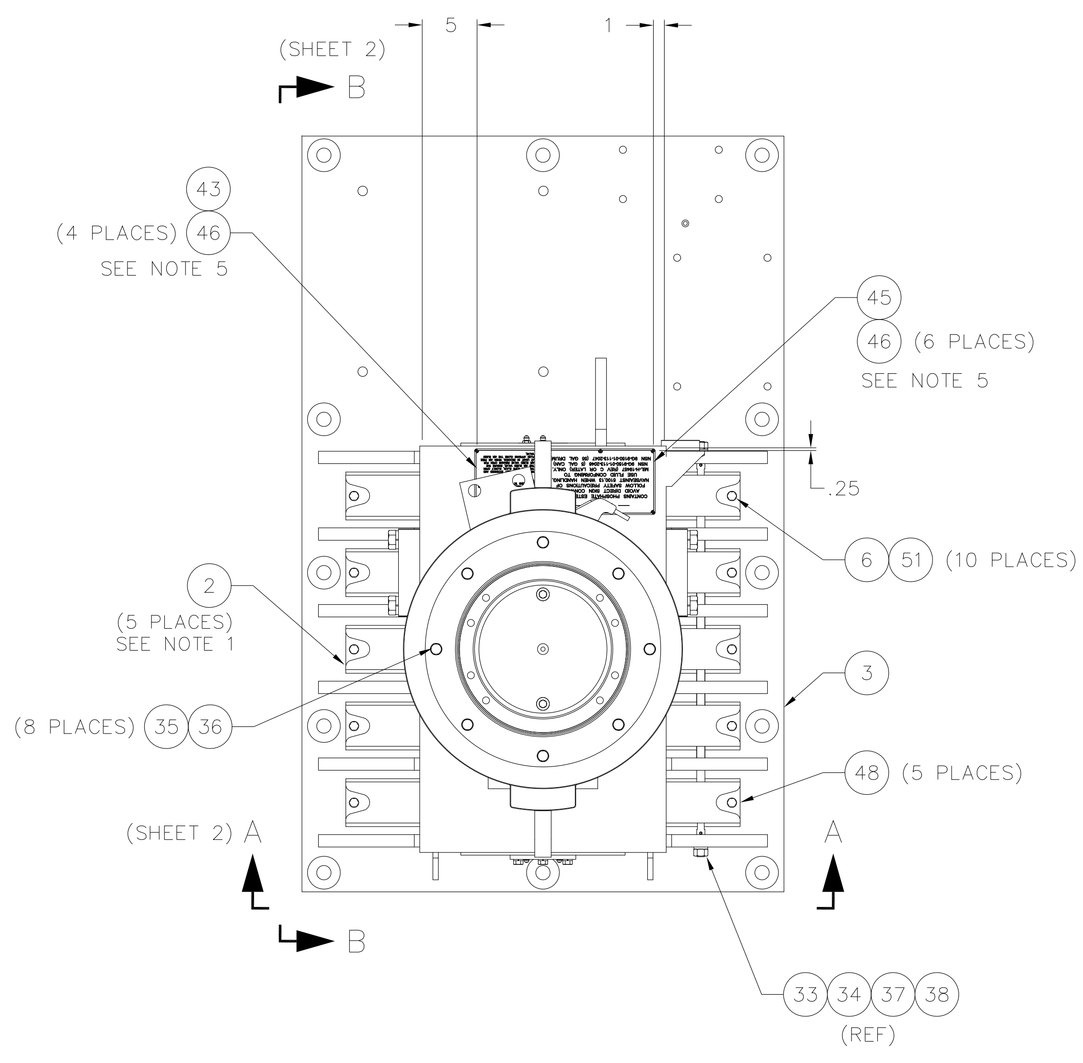

ITEM	QTY REQD	CODE IDENT NO.	DRAWING OR SPECIFICATION	NOMENCLATURE OR DESCRIPTION	REMARKS
51	13		NASM35338-143	LOCK WASHER, SST	.50 DIA
50	16	–	NOTE 7.3	SOCKET HD CAP SCREW (UNBRAKO)	1-8UNC X 8
49	8	–	NOTE 7.3	SOCKET HD CAP SCREW (UNBRAKO)	1/2-13UNC X 3-5/8
48	5	53711	8287515	FILLER PLATE	
47	AR	–	RTV 162	RTV ADHESIVE SEALANT	SEE NOTE 5 AND 7.2
46	14	–	ANSI B18.6.4	DRIVE SCREW	.164 DIA X .38
45	1	53711	6519110	CAUTION PLATE	
44	1	53711	8287593	NAME PLATE	
43	1	53711	6519112	AIR BLEED PROCEDURE PLATE	
42	AR	–	MIL-H-19457	FLUID, HYDRAULIC	SEE NOTE 2
41	AR	–	MIL-PRF-907	ANTI-SEIZE COMPOUND	SEE NOTE 6 AND 7.1
40	AR	–	NASM20995-C32	LOCKWIRE, STAINLESS STEEL	.032 DIA
39	1	–	NASM16562-250	SPRING PIN, CRES 316 SST	.75 DIA X .75
38	2	–	NASM35338-146	LOCK WASHER, SST	.75 DIA
37	2	–	MS51971-8	NUT, STAINLESS STEEL	3/4-10UNC-2A
36	8	–	NASM35307-460	HEX HD SCREW	5/8-11UNC-2A X 1.25
35	8	–	NASM35338-145	LOCK WASHER, STAINLESS STEEL	.625 DIA
34	2	53711	8287576	WIRE ROPE RETAINER ROD	
33	2	–	NASM16562-253	SPRING PIN	.25 DIA X 1.25
32	8	–	NASM51095-515	HEX HD SCREW, GRADE 5, PLTD	1-8UNC-2A X 3.5
31	8	–	NASM35338-148	LOCK WASHER, 1.0 DIA	STAINLESS STEEL
30	2	–	SAE AMS7259	O-RING, FKM (VITON) 90 DURO	SAE AS568-158
29	10	–	SAE AMS7276	O-RING, FKM (VITON) 75 DURO	SAE AS568-047
28	2	53711	8287594	WIPER RING	
27	1	53711	8287582	WIPER RING RETAINER	
26	1	53711	8287559	CONTROL FLOW VALVE FLANGE	
25	10	53711	8287575	BEARING SPACER	
24	1	53711	8287579	SPRING	
23	3	–	NASM35307-413	SCREW, HEX HEAD, DRILLED	1/2-13UNC-2A X 1.50
22	1	53711	8287578	CONTROL FLOW VALVE PISTON	
21	1	–	SAE AMS7259	O-RING, FKM (VITON) 90 DURO	SAE AS568-467
20	1	53711	8287560	CONTROL FLOW VALVE FLANGE	
19	1	53711	8287581	CONTROL FLOW VALVE SLEEVE, PORTED	
18	1	53711	8287580	CONTROL FLOW VALVE BUSHING GUIDE, PLAIN	
17	1	53711	8287567	RAM UPPER BUSHING GUIDE	
16	1 SET	53711	8287573	V-PACKING SEAL SET	
15	1	53711	8287572	WIPER RETAINER	
14	2	53711	8287562	RAM INNER SPRING	
13	1	53711	8287571	TENSIONER CYLINDER RETAINER	
12	1	53711	8287566	CARRIER BUSHING	
11	1	53711	8287564	RAM BUSHING GUIDE	
10	1	53711	8287595	RAM UPPER SPRING RING	
9	1	53711	8287561	RAM OUTER RING	
8	1	53711	8287563	RAM LOWER SPRING RING	
7	5	–	AS15005-1	FITTING, LUBE, 0.125 NPT	
6	10	–	NASM35307-413	SCREW, HEX HEAD	1/2-13UNC-2A X 1.50
5	1	53711	8287577	SHEAVE KEEPER PLATE	
4	1	53711	8287574	LOWER SHEAVE SHAFT	
3	1	53711	8287506	RAM CYLINDER	
2	5	53711	8287514	SHEAVE ASSEMBLY	SEE NOTE 1
1	1	53711	8287568	RAM ASSEMBLY	

PARTS LIST

NOTICE OF CONFIGURATION CONTROL

THIS DRAWING DEFINES AN ITEM OF UNDERWAY REPLENISHMENT (UNREP) STANDARD HARDWARE. NO REVISION TO THIS DRAWING OR THE HARDWARE REPRESENTED BY IT IS AUTHORIZED WITHOUT THE WRITTEN APPROVAL OF THE NAVAL SEA SYSTEMS COMMAND.

DISTRIBUTION STATEMENT C: DISTRIBUTION AUTHORIZED TO U.S. GOVERNMENT AGENCIES AND THEIR CONTRACTORS: OTHER REQUESTS MUST BE REFERRED TO COMNAVSEA OR THE COGNIZANT NAVSEA CODE.

WARNING: THIS DOCUMENT CONTAINS TECHNICAL DATA WHOSE EXPORT IS RESTRICTED BY THE ARMS EXPORT CONTROL ACT (TITLE 22, U.S.C. SEC. 2751 ET SEQ.) OR EXECUTIVE ORDER 12470. VIOLATIONS OF THESE EXPORT LAWS ARE SUBJECT TO SEVERE CRIMINAL PENALTIES.

DESTRUCTION NOTICE: DESTROY BY ANY METHOD THAT WILL PREVENT DISCLOSURE OF CONTENTS OR RECONSTRUCTION OF THE DOCUMENT.

APPLICATION	
NEXT ASSY	USED ON
8287500	8287500

6 5 4 3 2 1
SHEET NUMBER
REVISION STATUS OF SHEETS

MATERIAL:

UNLESS OTHERWISE SPECIFIED:
ALL DIMENSIONS ARE IN INCHES
TOLERANCES: ANGLES± .5°
FRACTIONS± 1/32
DECIMALS
.XX± .03
.XXX± .010
BEND RADII
FILLETS & ROUNDS
SURFACE FINISH ✓
BREAK ALL SHARP EDGES
INTERPRET DRAWING IN ACCORDANCE WITH STANDARDS PRESCRIBED IN ASME Y14.100
DO NOT SCALE THIS DRAWING

PORT HUENEME DIVISION
NAVAL SURFACE WARFARE CENTER
4363 MISSILE WAY
PORT HUENEME, CA 93043-4307

PREPARED	AMSEC	06-07
CHECKED		
TECH LEAD		
BR HD		
ACCEPTED BY NAVSEA	(SIGNATURE DOES NOT DENOTE APPROVAL)	
APPROVED FOR NAVSEA	(SIGN ONLY IF ENGINEERING HAS BEEN "PROVED" BY MANUFACTURE AND TEST)	

DEPARTMENT OF THE NAVY
NAVAL SEA SYSTEMS COMMAND
WASHINGTON,D.C. 20376-5160

HEAVY UNREP-NAVY STANDARD
RAM TENSIONER

TENSIONER CYLINDER ASSEMBLY

SIZE	CAGE CODE	NAVSEA DWG. NO.	REV
F	53711	8287501	–

SCALE 1/8 | UNIT WT 24670 LBS | SHEET 1 OF 3

REVISIONS				
ZONE	LTR	DESCRIPTION	DATE	APPROVED

8287501 –

NSWC 4120/1A (REV. 03-92)

NSMC 4120/1A (REV. 03-92)

SIZE	CAGE CODE	NAVSEA DWG. NO.	REV
F	53711	8287501	—

SCALE 1/12 OR NOTED | UNIT WT ——— | SHEET 2

8287501

VIEW A–A

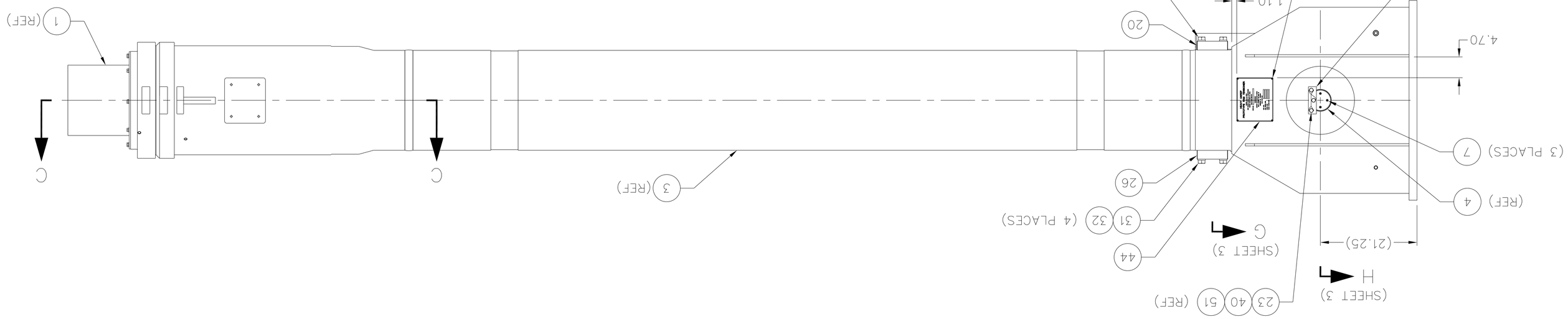

VIEW B–B

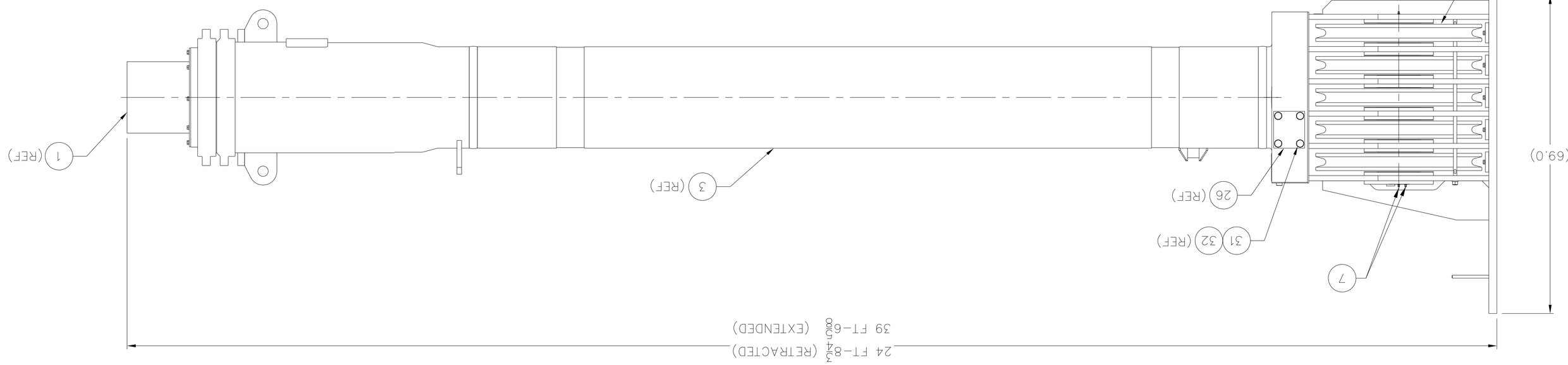

SECTION C–C

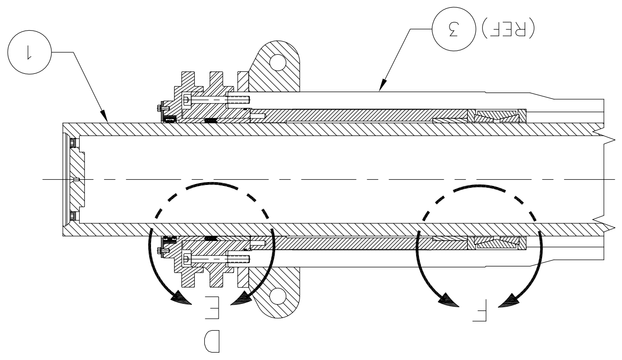

DETAIL D
FOR INFO NOT SHOWN SEE DET E
SCALE: 1/2

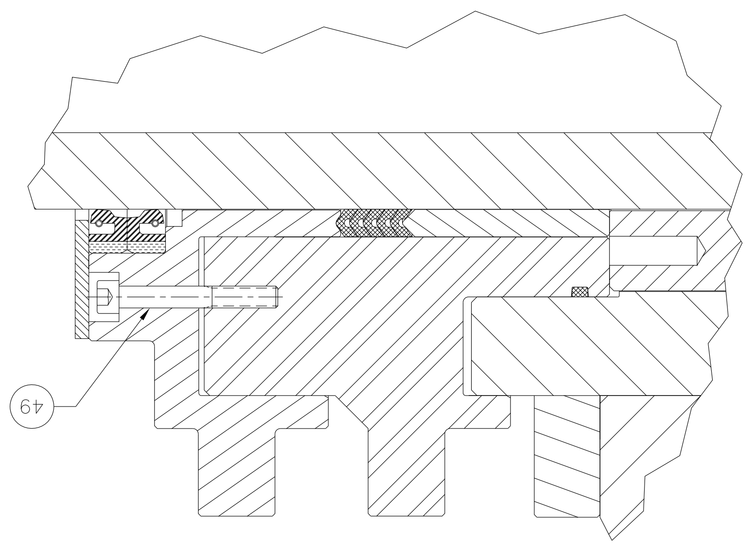

DETAIL E
ROTATED CW 11.25° FROM DETAIL E
SCALE: 1/2

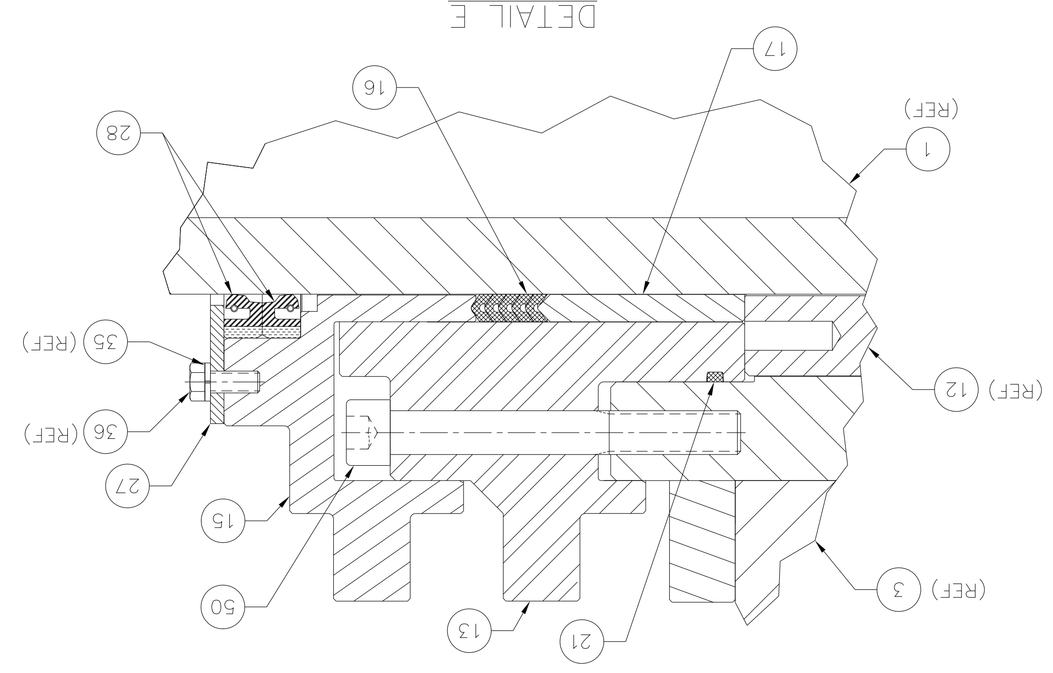

DETAIL F
SCALE: 1/2

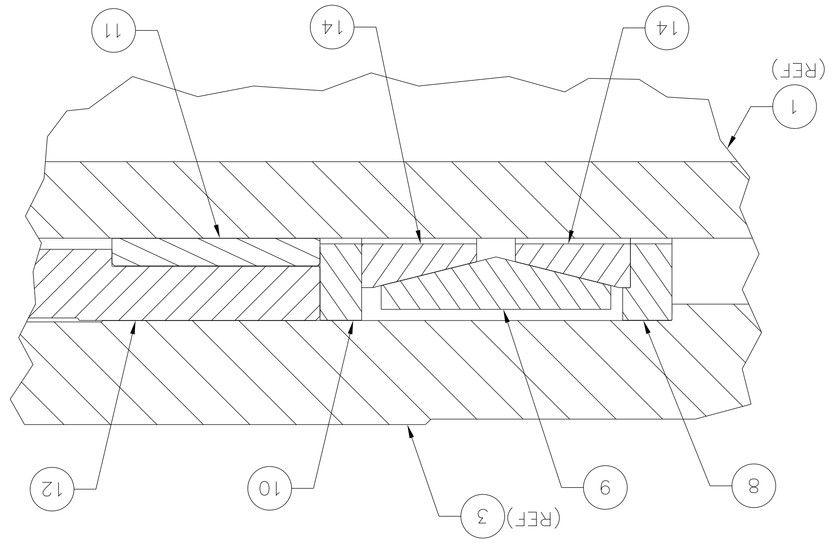

ZONE	LTR	DESCRIPTION	DATE	APPROVED

REVISIONS

NSMC 4120/7A (REV. 03-92)

SIZE	CAGE CODE	NAVSEA DWG. NO.	REV
F	53711	8287501	—

SCALE 1/4 OR NOTED UNIT WT —— SHEET 3

8287501

SECTION H–H

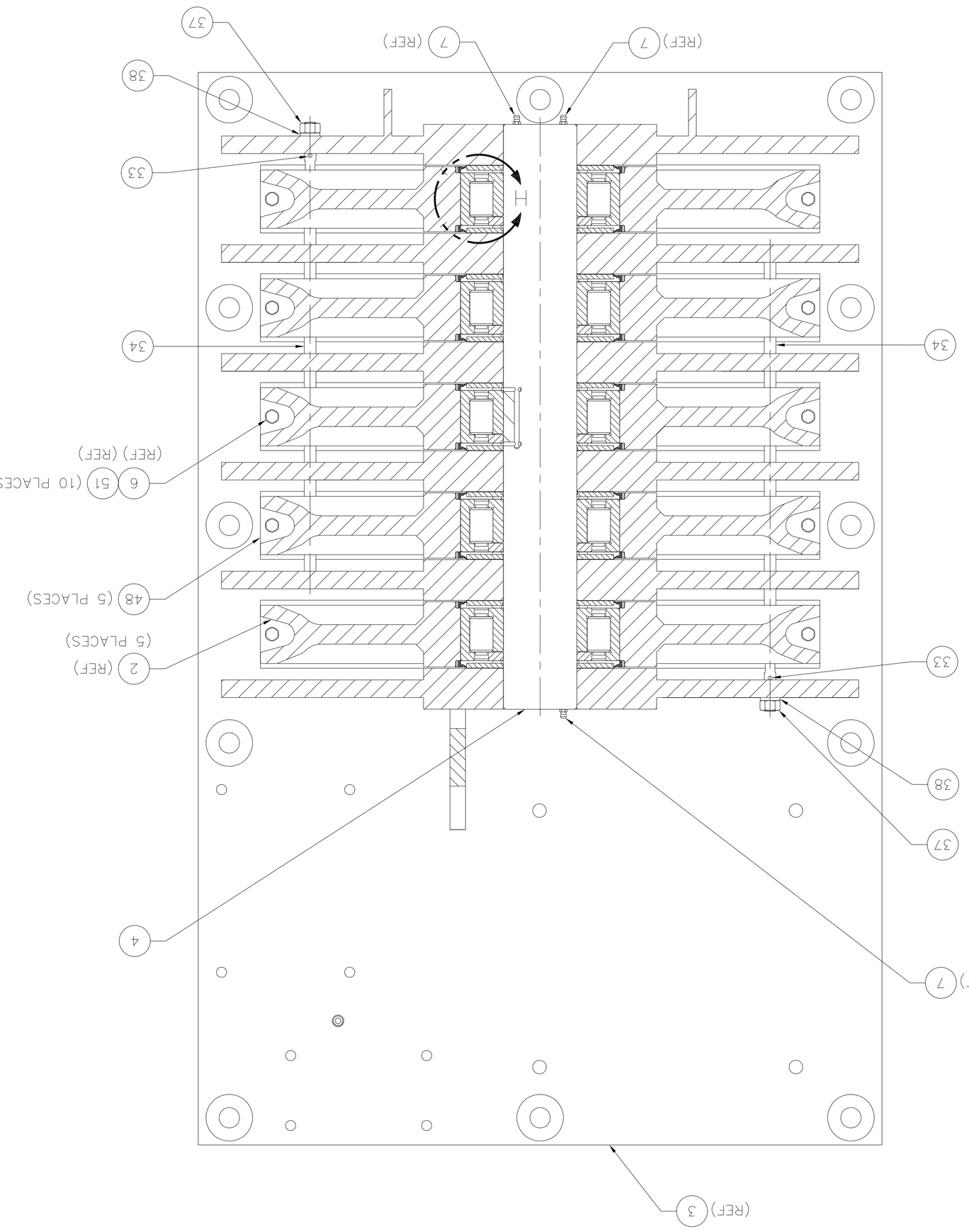

SECTION G–G

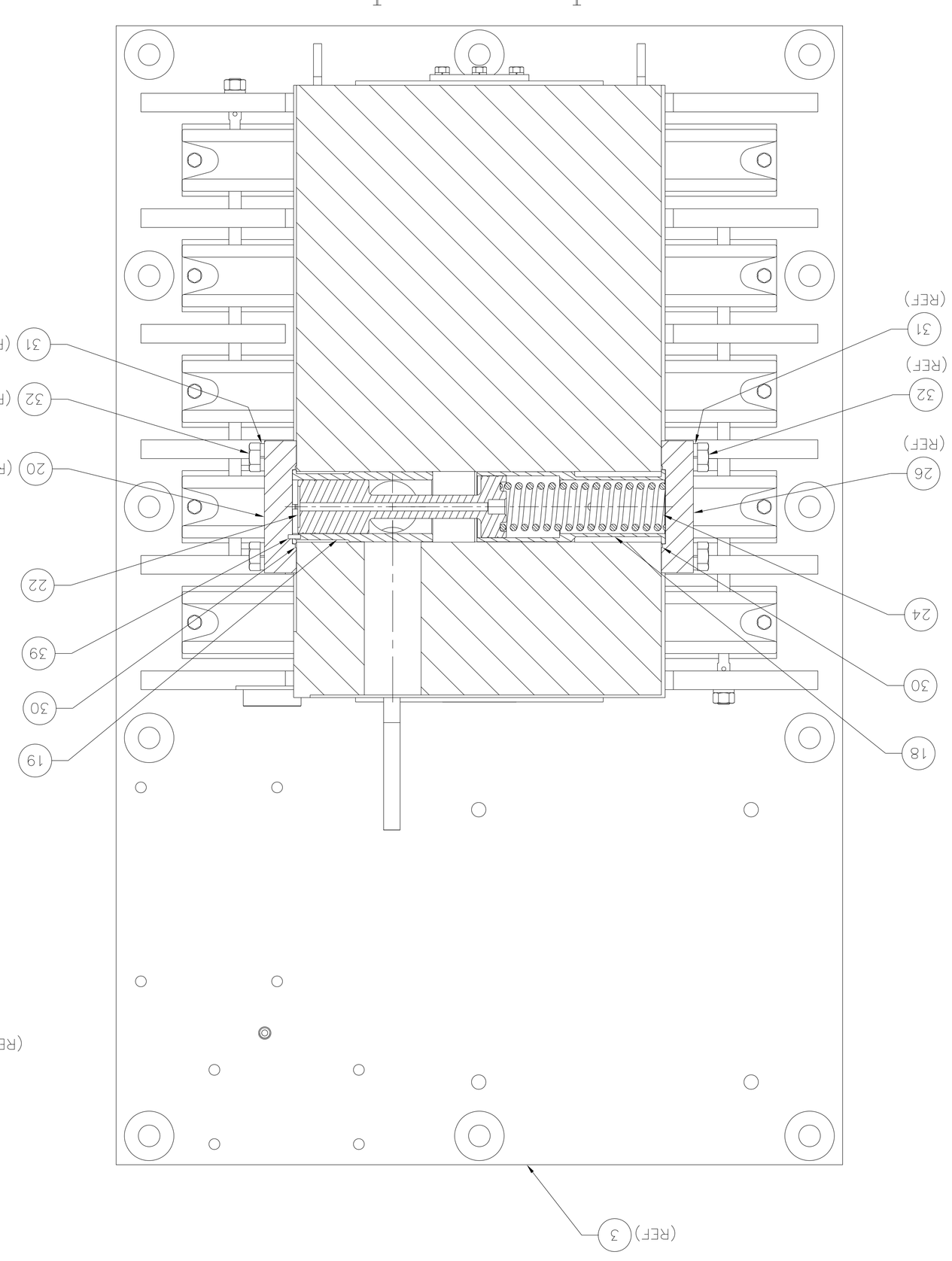

SECTION J–J

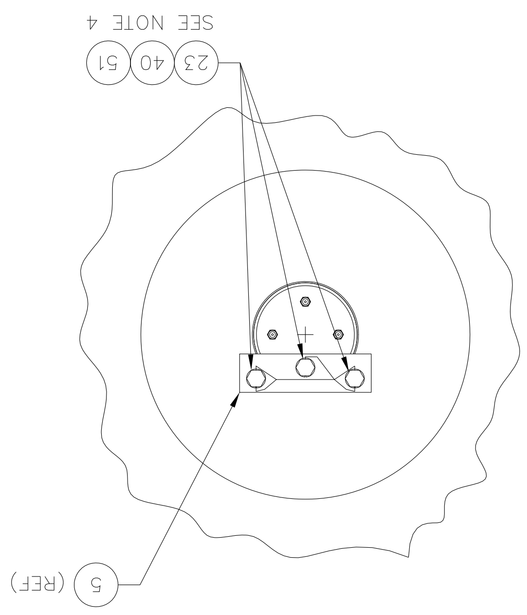

DETAIL H

SCALE: 1/2

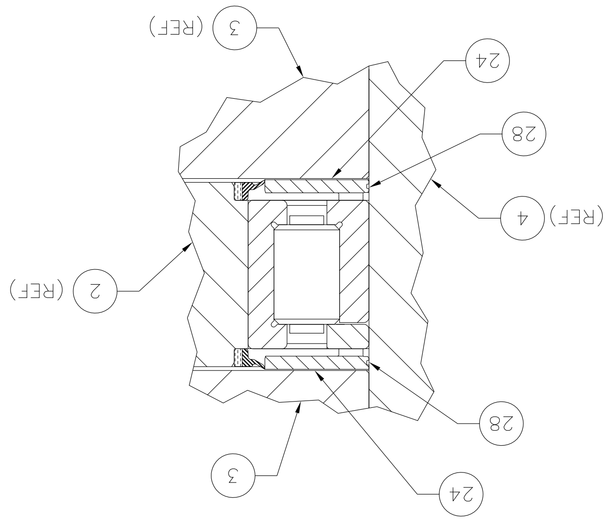

REVISIONS			
ZONE	LTR	DESCRIPTION	DATE	APPROVED

NOTES:

1. PRIOR TO ASSEMBLY, APPLY LED-PLATE ANTISEIZE COMPOUND, PC 11, TO ALL THREADED SURFACES. FOLLOW MANUFACTURER'S INSTRUCTIONS FOR APPLICATION.

2. THE FOLLOWING ITEM SHALL BE PROCURED FROM THE VENDOR LISTED. A SUBSTITUTE ITEM SHALL NOT BE USED WITHOUT PRIOR APPROVAL BY THE NAVY.

2.1 PC 11 ANTISEIZE COMPOUND, LED-PLATE, APPROVED SOURCE OF SUPPLY:
ARMITE LABORATORIES INC
1560 SUPERIOR AVE STE A4
COSTA MESA, CA 92627-3676
CODE IDENT: 84180
PART NO LP-250 (MEETS MIL-PRF-907)

3. AFTER RAM TENSIONER ASSEMBLY AND TESTING IN ACCORDANCE WITH REFERENCE 1, STAMP FLANGE OF ACCUMULATOR CYLINDER WELDMENT, PC 3, WITH ASME OFFICAL CODE "U" SYMBOL IN ACCORDANCE WITH ASME BOILER AND PRESSURE VESSEL CODE, SECTION VIII, DIVISION 1, PARTS UG-116 AND UG-118 IN THE LOCATION SHOWN.

4. STORE ACCUMULATOR CYLINDER SUBASSEMBLY IN UPRIGHT POSITION TO AVOID DEFORMATION OF PISTON SEAL (T-RING) ASSEMBLY, PC 5.

5. BULK ITEM (PC 11 AND 12) FIND NUMBERS ARE NOT SHOWN ON THE FACE OF THE DRAWING.

6. APPLY O-RING LUBRICANT, PC 12, TO SEALS & O-RINGS PC 4 THRU 6, 9 AND 10 TO MATING SURFACES AND GROOVES. FOLLOW MANUFACTURER'S INSTRUCTIONS FOR APPLICATION.

6.1 PETROLEUM BASED O-RING LUBRICANTS SHALL NOT BE USED OR SUBSTITUTED FOR PC 12.

7. THE FOLLOWING ITEM(S) MAY BE PROCURED FROM THE VENDOR(S) LISTED.

7.1 PC 12: O-RING LUBRICANT (SILICONE),
APPROVED SOURCE OF SUPPLY:
PARKER HANNIFIN CORP, O-RING DIVISION
2360 PALUMBO DRIVE
LEXINGTON, KY 40509-1048
CAGE CODE: 02697
TRADE NAME: PARKER SUPER O-LUBE

REFERENCES			
NO	TITLE	CODE IDENT	DWG NO
1	RAM TENSIONER MANUFACTURER'S TEST REQUIREMENTS	53711	8287578

REVISIONS				
ZONE	LTR	DESCRIPTION	DATE	APPROVED

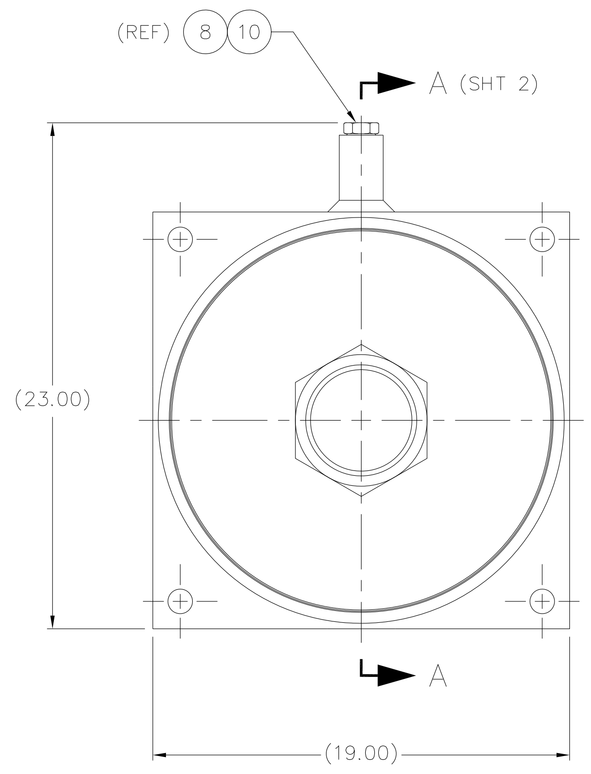

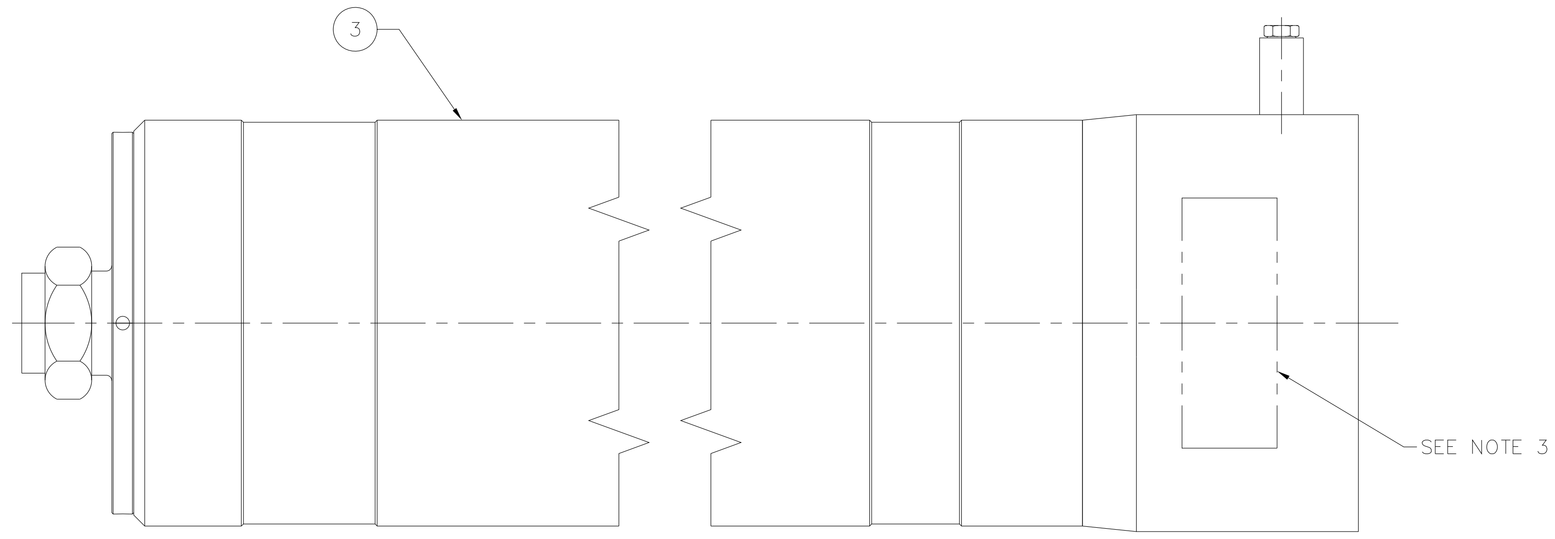

PART OR IDENTIFYING NO.	QTY REQD	CODE IDENT NO.	DRAWING OR SPECIFICATION	NOMENCLATURE OR DESCRIPTION	REMARKS
13	1	53711	8288618	3 NPS BLANK SHIPPING TAILPIECE	
12	AR	02697		O-RING LUBRICANT	SEE NOTE 6 AND 7
11	AR	–	MIL-PRF-907	ANTISEIZE COMPOUND	SEE NOTE 1
10	1	–	SAE AS568-914	O-RING, FKM (VITON) 90 HDNS	1.047 ID X .116 W
9	1	–	SAE AS8791-458	BACK-UP RING	14.502 ID X 14.974 OD X .108
8	1	–	SAE J514	HEX HEAD PLUG	1 3/16-12 UN-2A
7	1	53711	8288592	3 NPS UNION NUT	
6	1	–	SAE AS568-458	O-RING, FKM (VITON) 90 HDNS	14.475 ID X .275W
5	2	53711	8287532	ACCUMULATOR PISTON RING	
4	1	53711	8287531	ACCUMULATOR PISTON SEAL	(T-RING)
3	1	53711	8287527	ACCUMULATOR CYLINDER WELDMENT	
2	1	53711	8287526	ACCUMULATOR CAP	
1	1	53711	8287524	ACCUMULATOR PISTON ASSEMBLY	

PARTS LIST

8287502

NOTICE OF CONFIGURATION CONTROL

THIS DRAWING DEFINES AN ITEM OF UNDERWAY REPLENISHMENT (UNREP) STANDARD HARDWARE. NO REVISION TO THIS DRAWING OR THE HARDWARE REPRESENTED BY IT IS AUTHORIZED WITHOUT THE WRITTEN APPROVAL OF THE NAVAL SEA SYSTEMS COMMAND.

DISTRIBUTION STATEMENT C: DISTRIBUTION AUTHORIZED TO U.S. GOVERNMENT AGENCIES AND THEIR CONTRACTORS: OTHER REQUESTS MUST BE REFERRED TO COMNAVSEA OR THE COGNIZANT NAVSEA CODE.

WARNING: THIS DOCUMENT CONTAINS TECHNICAL DATA WHOSE EXPORT IS RESTRICTED BY THE ARMS EXPORT CONTROL ACT (TITLE 22, U.S.C. SEC. 2751 ET SEQ.) OR EXECUTIVE ORDER 12470. VIOLATIONS OF THESE EXPORT LAWS ARE SUBJECT TO SEVERE CRIMINAL PENALTIES.

DESTRUCTION NOTICE: DESTROY BY ANY METHOD THAT WILL PREVENT DISCLOSURE OF CONTENTS OR RECONSTRUCTION OF THE DOCUMENT.

6	5	4	3	2	1
				–	–

SHEET NUMBER

REVISION STATUS OF SHEETS

APPLICATION	
NEXT ASSY	USED ON
8287500	8287500

MATERIAL:

UNLESS OTHERWISE SPECIFIED:
ALL DIMENSIONS ARE IN INCHES
TOLERANCES: ANGLES± .5°
FRACTIONS±
DECIMALS
.XX±
.XXX±
BEND RADII
FILLETS & ROUNDS
SURFACE FINISH ✓
BREAK ALL SHARP EDGES
INTERPRET DRAWING IN ACCORDANCE WITH STANDARDS PRESCRIBED IN ASME Y14.100
DO NOT SCALE THIS DRAWING

PORT HUENEME DIVISION
NAVAL SURFACE WARFARE CENTER
4363 MISSILE WAY
PORT HUENEME, CA 93043-4307

PREPARED	AMSEC	06-07
CHECKED		
TECH LEAD		
BR HD		
ACCEPTED BY NAVSEA		(SIGNATURE DOES NOT DENOTE APPROVAL)
APPROVED FOR NAVSEA		(SIGN ONLY IF ENGINEERING HAS BEEN "PROVED" BY MANUFACTURE AND TEST)

DEPARTMENT OF THE NAVY
NAVAL SEA SYSTEMS COMMAND
WASHINGTON,D.C. 20376-5160

HEAVY UNREP-NAVY STANDARD
RAM TENSIONER

ACCUMULATOR ASSEMBLY

SIZE	CAGE CODE	NAVSEA DWG. NO.	REV
F	53711	8287502	–

SCALE 1/4 | UNIT WT 7915 LBS | SHEET 1 OF 2

NSWC 4120/1A (REV. 03-92)

REVISIONS				
ZONE	LTR	DESCRIPTION	DATE	APPROVED

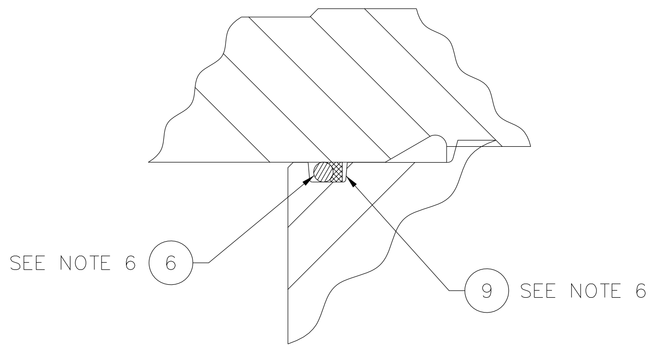

DETAIL B
SCALE: 1/1

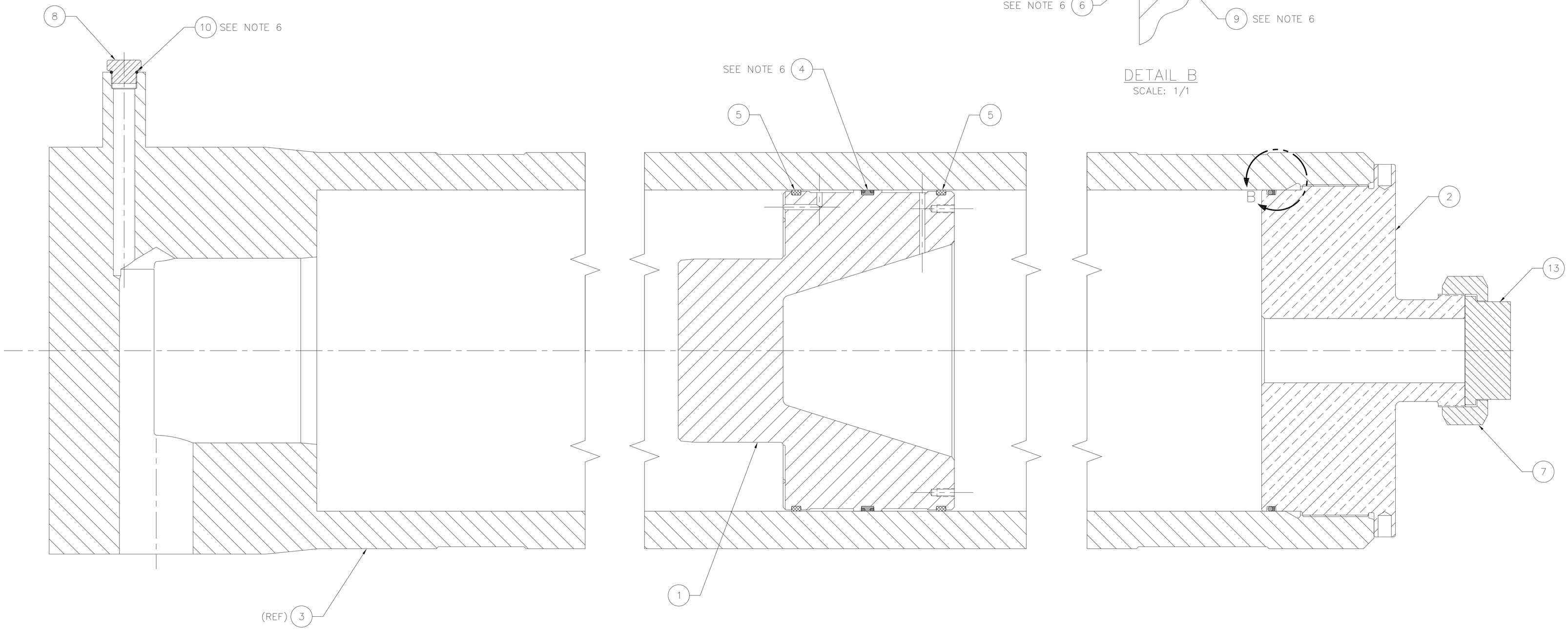

SECTION A–A
SCALE: 1/2

SIZE	CAGE CODE	NAVSEA DWG. NO.	REV
F	53711	8287502	–
SCALE AS NOTED	UNIT WT ——	SHEET 2	

8287502

NSWC 4120/1A (REV. 03-92)

NOTES:

1. PRIOR TO ASSEMBLY, APPLY LED-PLATE ANTISEIZE COMPOUND, PC 14, TO ALL THREADS. FOLLOW MANUFACTURER'S INSTRUCTIONS FOR APPLICATION.
2. FILL ALL BEARINGS WITH GREASE, PC 12, THRU GREASE FITTING, PC 9, UNTIL GREASE SHOWS THRU BEARING SEALS.
3. INSTALL BEARING SPACERS, PC 6, WITH THE GREASE GROOVE TOWARD THE BEARING AS SHOWN IN DETAIL B.
4. DRILL A .043 INCH DIA HOLE THROUGH THE CENTER OF THE HEADS OF SCREWS, PC 8 AND 11, FOR LOCKWIRE. SECURE SCREWS, PC 8 AND 11, IN POSITION WITH LOCKWIRE, PC 13, IN ACCORDANCE WITH NASM 33540 USING THE DOUBLE TWIST METHOD.
5. BULK ITEM (PC 12-14) FIND NUMBERS ARE NOT SHOWN ON THE FACE OF THE DRAWING.
6. THE FOLLOWING ITEM SHALL BE PROCURED FROM THE VENDOR LISTED. A SUBSTITUTE ITEM SHALL NOT BE USED WITHOUT PRIOR APPROVAL BY THE NAVY.

6.1 PC 14 ANTISEIZE COMPOUND, LED-PLATE
APPROVED SOURCE OF SUPPLY:
ARMITE LABORATORIES INC
1560 SUPERIOR AVE STE A4
COSTA MESA, CA 92627-3676
CODE IDENT: 84180
PART NO LP-250 (MEETS MIL-PRF-907)

REVISIONS

ZONE	LTR	DESCRIPTION	DATE	APPROVED

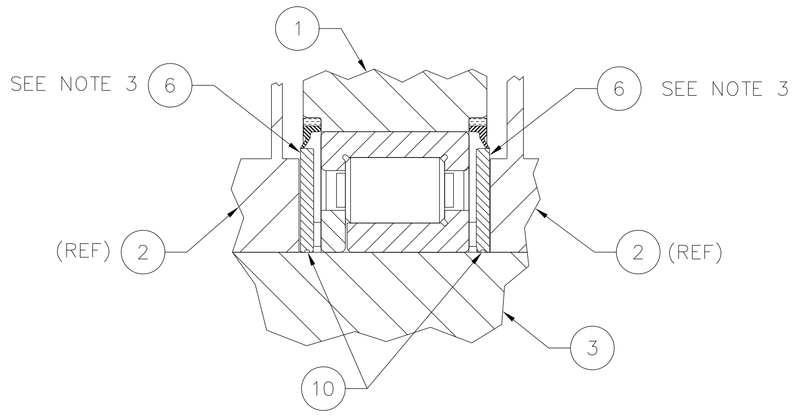

DETAIL B
(4 PLACES)
SCALE: 1/1

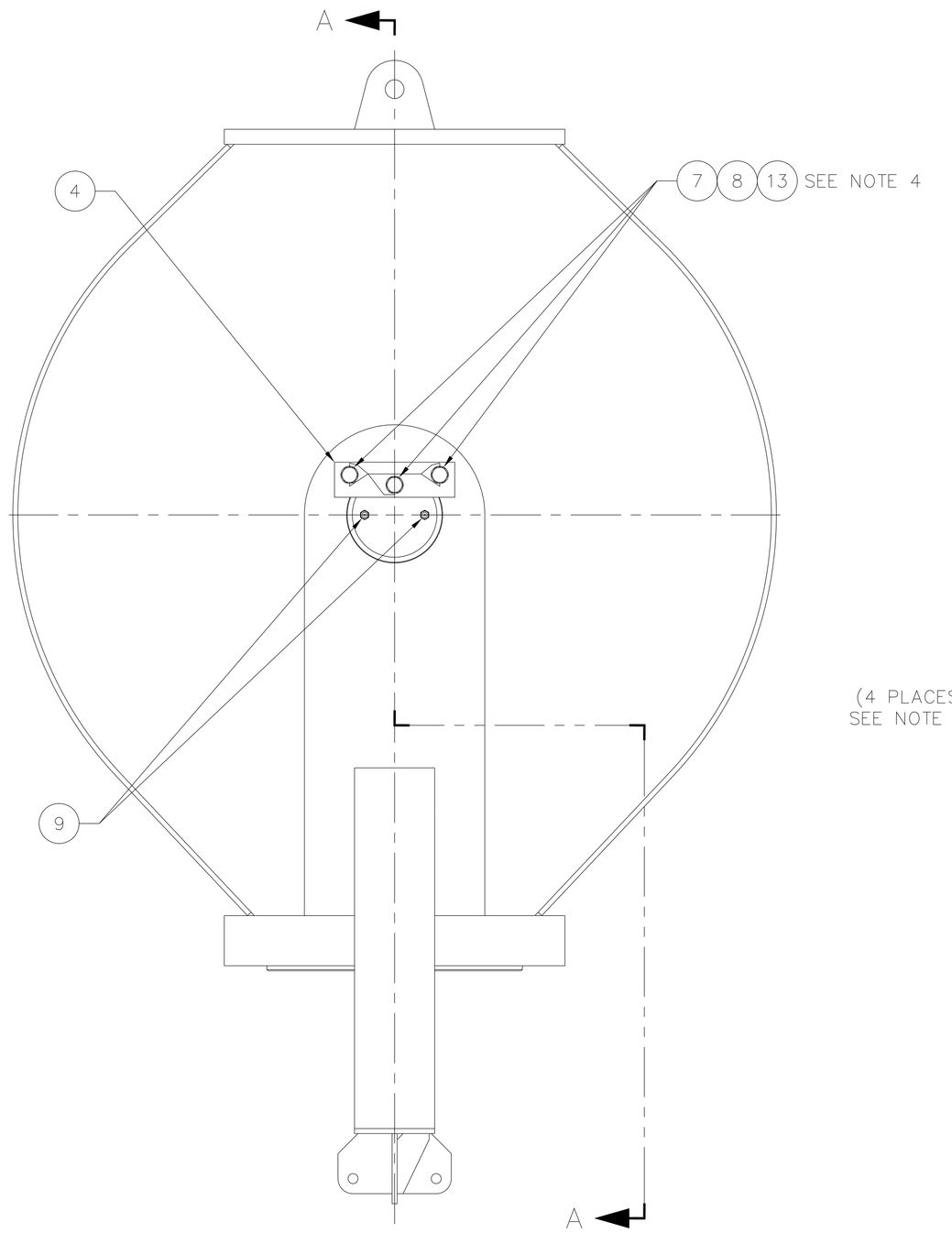

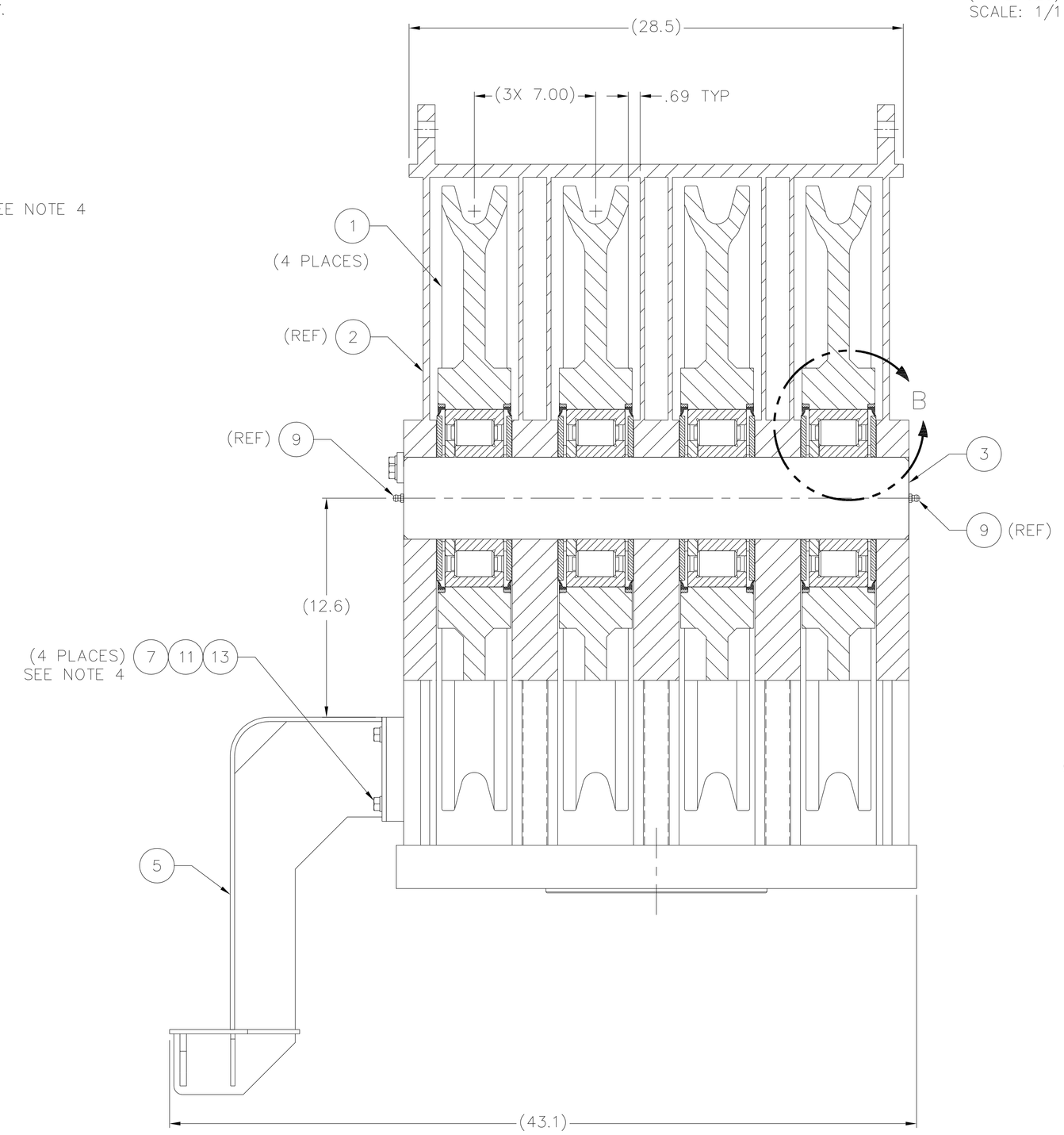

SECTION A-A

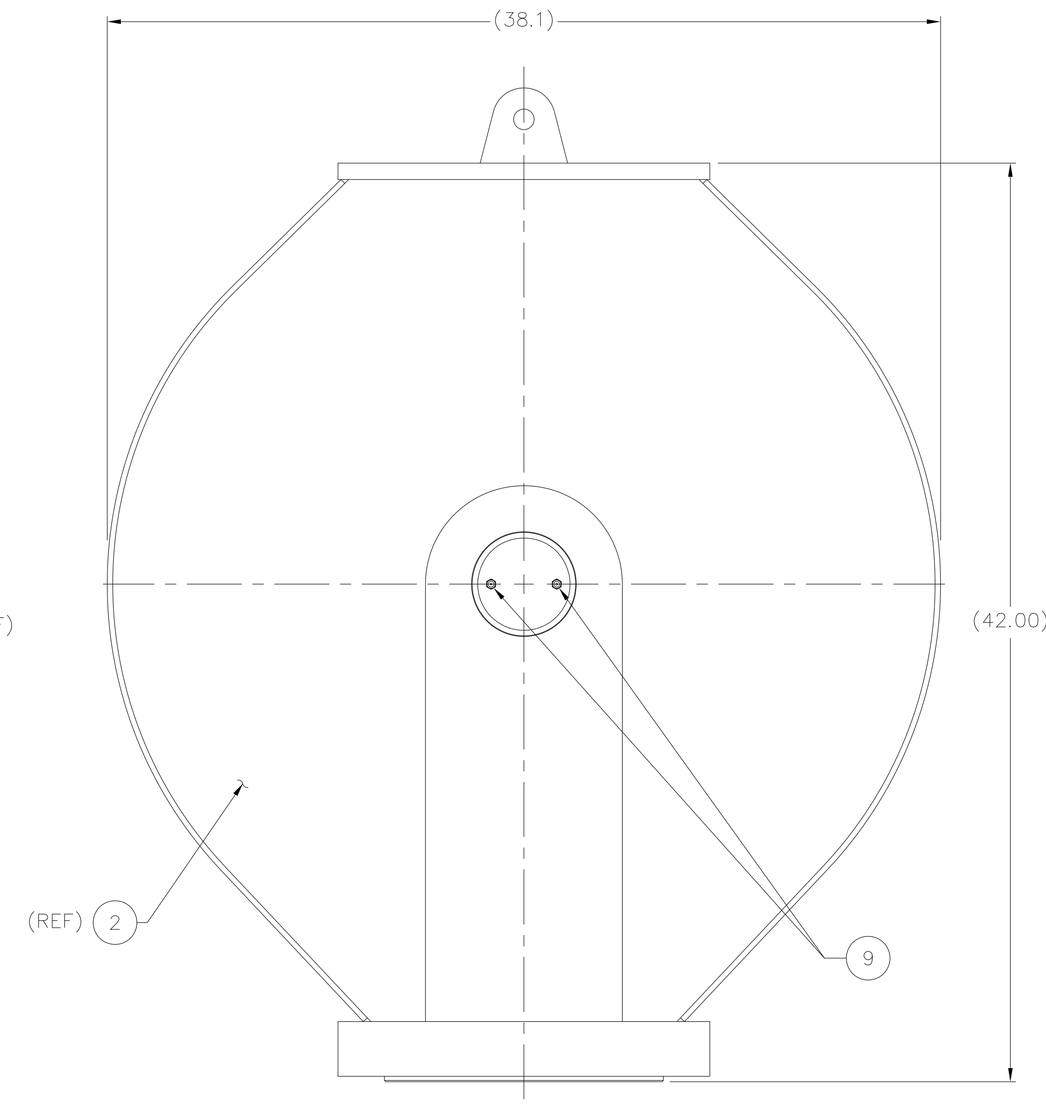

PART OR IDENTIFYING NO.	QTY REQD	CODE IDENT NO.	DRAWING OR SPECIFICATION	NOMENCLATURE OR DESCRIPTION	REMARKS
14	AR	–	MIL-PRF-907	ANTISEIZE COMPOUND	
13	AR	–	NASM20995-C32	LOCKWIRE, .032 DIA SST	
12	AR	COMML	MIL-PRF-24139	MULTI-PURPOSE GREASE	
11	4	–	NASM35307-409	SCREW, HEX HD, 1/2-13UNC-2A	LG =1, NOTE 4
10	8	–	SAE AMS7276	O-RING, FKM (VITON) 75 DURO	SAE AS568-047
9	4	–	AS15005-1	GREASE FITTING, 1/8-NPT	
8	3	–	NASM35307-413	SCREW, HEX HD, 1/2-13UNC-2A	LG=1.5, NOTE 4
7	7	–	NASM35338-143	WASHER, LOCK SPRING, 1/2 NOM	
6	8	53711	8287575	BEARING SPACER	
5	1	53711	8287523	CABLE BRACKET	
4	1	53711	8287577	SHEAVE KEEPER PLATE	
3	1	53711	8287522	UPPER SHEAVE SHAFT	
2	1	53711	8287519	UPR SHV HOUSING	
1	4	53711	8287514	SHEAVE ASSEMBLY	FOR 1 3/8 WIRE ROPE

PARTS LIST

8287503 1

NOTICE OF CONFIGURATION CONTROL

THIS DRAWING DEFINES AN ITEM OF UNDERWAY REPLENISHMENT (UNREP) STANDARD HARDWARE. NO REVISION TO THIS DRAWING OR THE HARDWARE REPRESENTED BY IT IS AUTHORIZED WITHOUT THE WRITTEN APPROVAL OF THE NAVAL SEA SYSTEMS COMMAND.

DISTRIBUTION STATEMENT C: DISTRIBUTION AUTHORIZED TO U.S. GOVERNMENT AGENCIES AND THEIR CONTRACTORS; OTHER REQUESTS MUST BE REFERRED TO COMNAVSEA OR THE COGNIZANT NAVSEA CODE.

WARNING: THIS DOCUMENT CONTAINS TECHNICAL DATA WHOSE EXPORT IS RESTRICTED BY THE ARMS EXPORT CONTROL ACT (TITLE 22, U.S.C. SEC. 2751 ET SEQ.) OR EXECUTIVE ORDER 12470. VIOLATIONS OF THESE EXPORT LAWS ARE SUBJECT TO SEVERE CRIMINAL PENALTIES.

DESTRUCTION NOTICE: DESTROY BY ANY METHOD THAT WILL PREVENT DISCLOSURE OF CONTENTS OR RECONSTRUCTION OF THE DOCUMENT.

APPLICATION	
NEXT ASSY	USED ON
8287500	8287500

MATERIAL:

UNLESS OTHERWISE SPECIFIED: ALL DIMENSIONS ARE IN INCHES
TOLERANCES: ANGLES± .5°
FRACTIONS±
DECIMALS
.XX±
.XXX±
BEND RADII
FILLETS & ROUNDS
SURFACE FINISH ✓
BREAK ALL SHARP EDGES
INTERPRET DRAWING IN ACCORDANCE WITH STANDARDS PRESCRIBED IN ASME Y14.100
DO NOT SCALE THIS DRAWING

PORT HUENEME DIVISION
NAVAL SURFACE WARFARE CENTER
4363 MISSILE WAY
PORT HUENEME, CA 93043-4307

PREPARED	AMSEC	06-07
CHECKED		
TECH LEAD		
BR HD		
ACCEPTED BY NAVSEA		(SIGNATURE DOES NOT DENOTE APPROVAL)
APPROVED FOR NAVSEA		(SIGN ONLY IF ENGINEERING HAS BEEN "PROVED" BY MANUFACTURE AND TEST)

DEPARTMENT OF THE NAVY
NAVAL SEA SYSTEMS COMMAND
WASHINGTON,D.C. 20376-5160

HEAVY UNREP-NAVY STANDARD
RAM TENSIONER

UPPER SHEAVE HOUSING ASSEMBLY

SIZE	CAGE CODE	NAVSEA DWG. NO.	REV
F	53711	8287503	–

SCALE 1/4 | UNIT WT 3900 LBS | SHEET 1 OF 1

NSWC 4120/1A (REV. 03-92)

NOTES:

1. APPLY O-RING LUBRICANT, PC 23, TO O-RINGS PCS 25 AND 26 AND TO MATING SURFACES AND GROOVES. FOLLOW MANUFACTURER'S INSTRUCTIONS FOR APPLICATION.

1.1 PETROLEUM BASED O-RING LUBRICANTS SHALL NOT BE USED OR SUBSTITUTED FOR PC 23.

2. PRIOR TO ASSEMBLY, APPLY LED-PLATE ANTISEIZE COMPOUND, PC 24, TO ALL THREADS. FOLLOW MANUFACTURER'S INSTRUCTIONS FOR APPLICATION.

3. THE FOLLOWING ITEM SHALL BE PROCURED FROM THE VENDOR LISTED. A SUBSTITUTE ITEM SHALL NOT BE USED WITHOUT PRIOR APPROVAL BY THE NAVY.

3.1. PC 24 ANTISEIZE COMPOUND, LED-PLATE
APPROVED SOURCE OF SUPPLY:
ARMITE LABORATORIES INC
1560 SUPERIOR AVE STE A4
COSTA MESA, CA 92627-3676
CODE IDENT: 84180
PART NO LP-250 MIL-PRF-907

4. INSTALL HAND PUMP SCREEN, PIECE 7, WITH SCREEN SIDE AWAY FROM SUPPLY TANK TUBING ASSEMBLY, PIECE 6.

5. THE FOLLOWING ITEM(S) MAY BE PROCURED FROM THE VENDOR(S) LISTED.

5.1 PC 23: O-RING LUBRICANT (SILICONE),
APPROVED SOURCE OF SUPPLY:
PARKER HANNIFIN CORP, O-RING DIVISION
2360 PALUMBO DRIVE
LEXINGTON, KY 40509-1048
CAGE CODE: 02697
TRADE NAME: PARKER SUPER O-LUBE

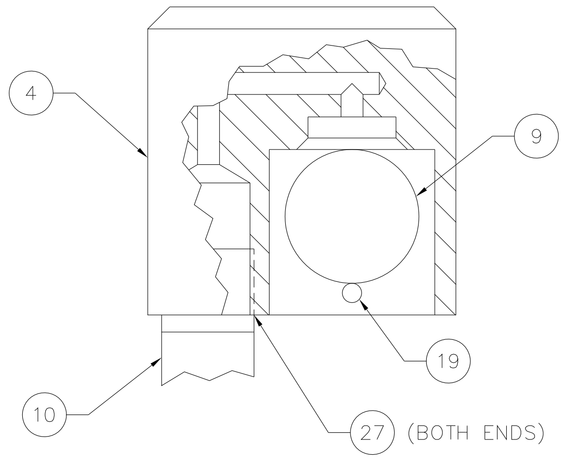

DETAIL C
SCALE: 1/1

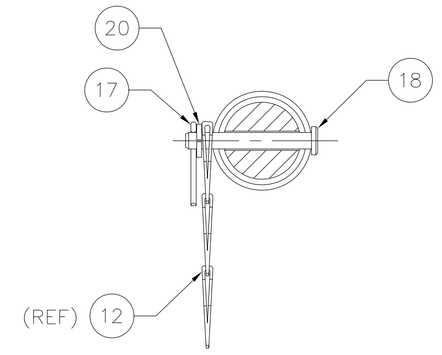

SECTION B-B
SCALE: 1/1

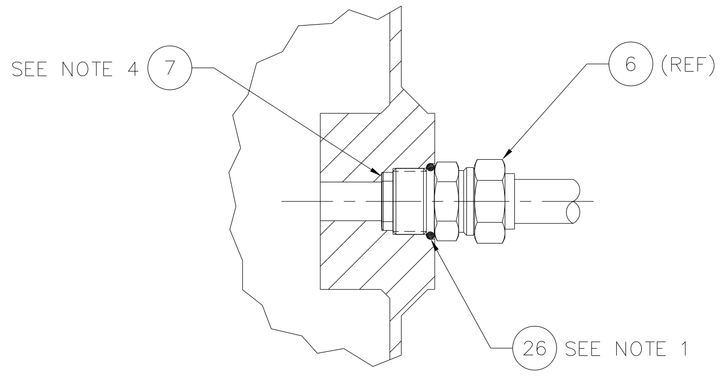

DETAIL A
SCALE: 1/1

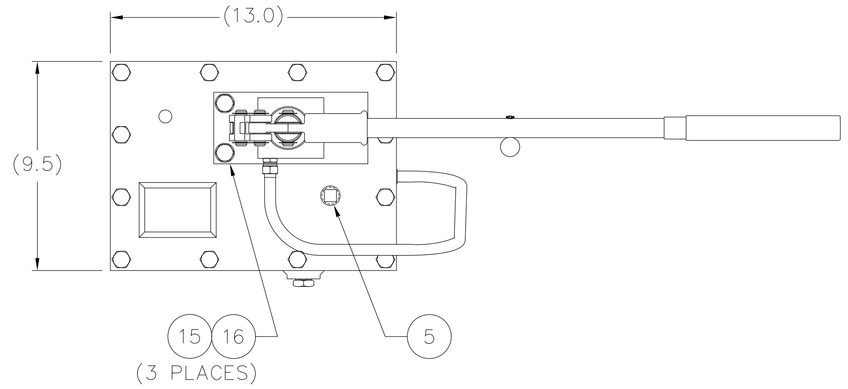

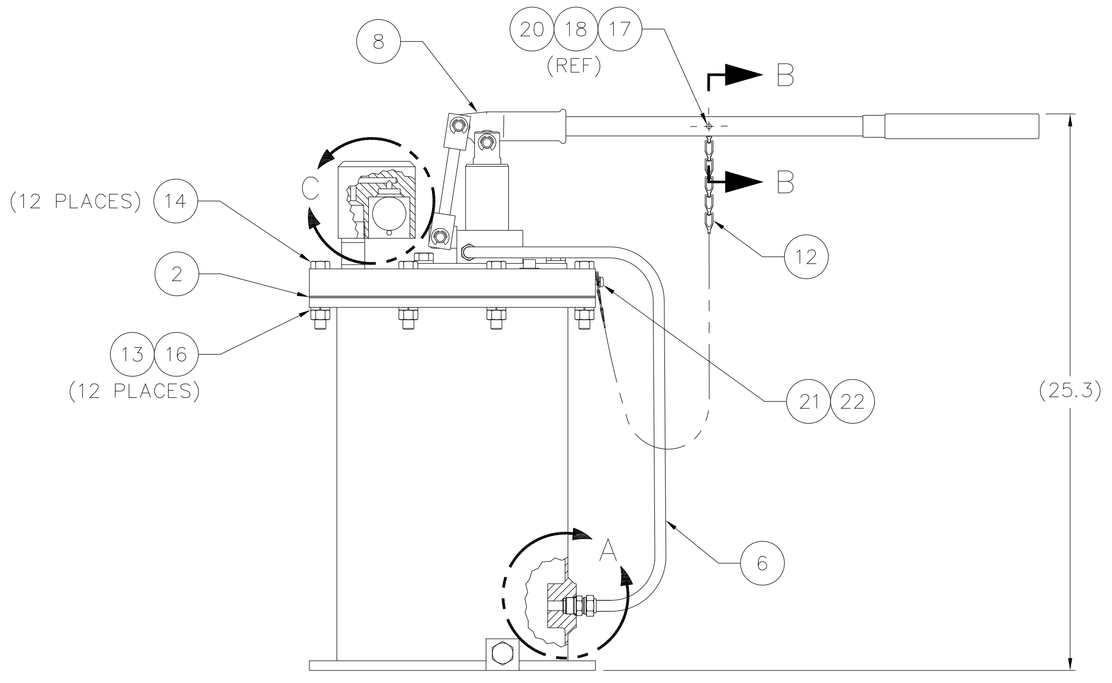

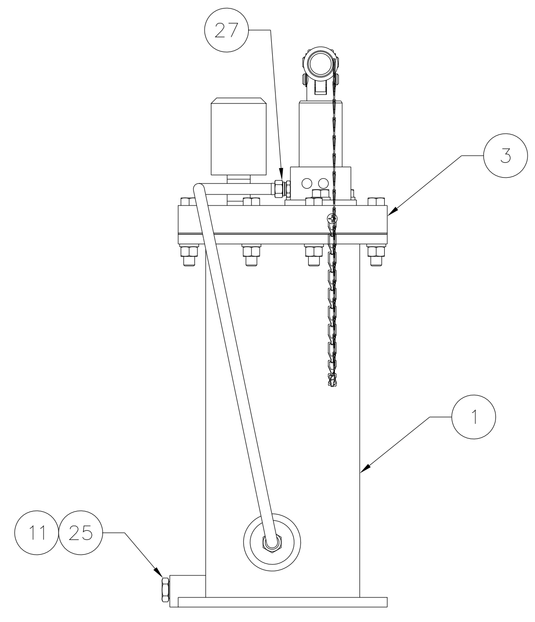

REVISIONS				
ZONE	LTR	DESCRIPTION	DATE	APPROVED

PART OR IDENTIFYING NO.	QTY REQD	CODE IDENT NO.	DRAWING OR SPECIFICATION	NOMENCLATURE OR DESCRIPTION	REMARKS
27	AR	–	A-A-58092	PTFE ANTISEIZE TAPE	TY II, SIZE 1, 1/4 IN W
26	1	–	SAE AMS7259	O-RING, FKM (VITON) 90 DURO, 1/2 OD BOSS	SAE AS568-908
25	1	–	SAE AMS7259	O-RING, FKM (VITON) 90 DURO, 3/8 OD BOSS	SAE AS568-906
24	AR	–	MIL-PRF-907	ANTISEIZE COMPOUND	SEE NOTE 2
23	AR	02697		O-RING LUBRICANT	SEE NOTE 1 AND 5
22	1	–	MS51957-45	PAN HD SCREW, #8-32UNC-2A	LG=1/2
21	1	–	NASM35338-137	SPRING LOCK WASHER	#8 NOM
20	1	–	NASM15795	PLAIN WASHER	.19 NOM
19	1	–	NASM16562-249	SPRING PIN	.219 DIA X 2.5LG
18	1	–	NASM9463-19	CLEVIS PIN	.188 DIA X 1.25LG
17	1	–	NASM24665-151	COTTER PIN	.062 DIA X .50LG
16	15	–	NASM35338-143	SPRING LOCK WASHER	.50 NOM
15	3	–	NASM35307-409	HEX HD SCREW, 1/2-13UNC-2A	LG=1
14	12	–	NASM35307-417	HEX HD SCREW, 1/2-13UNC-2A	LG=2.50
13	12	–	MS51971-5	HEX NUT, 1/2-13UNC-2B	
12	1.5LF		RR-C-271	SASH CHAIN	TY II, CL 3
11	1	–	SAE J514	HEX HD STRAIGHT THREAD PLUG	9/16-18UNF-2A
10	1	–	ASTM A733	PIPE NIPPLE, 3/4 NPT	LG = 2 1/2
9	1	–	COMML	TABLE TENNIS BALL	1.50 DIA
8	1	53711	8287533	HAND PUMP	
7	1	53711	8287535	HAND PUMP SCREEN	
6	1	53711	8287534	SUPPLY TANK INLET TUBING ASSY	
5	1	53711	8287541	TANK DIPSTICK	
4	1	53711	6519140	BREATHER HOUSING	
3	1	53711	8287536	SUPPLY TANK COVER	
2	1	53711	8287539	SUPPLY TANK GASKET	
1	1	53711	8287537	SUPPLY TANK	

PARTS LIST

8287504

NOTICE OF CONFIGURATION CONTROL

THIS DRAWING DEFINES AN ITEM OF UNDERWAY REPLENISHMENT (UNREP) STANDARD HARDWARE. NO REVISION TO THIS DRAWING OR THE HARDWARE REPRESENTED BY IT IS AUTHORIZED WITHOUT THE WRITTEN APPROVAL OF THE NAVAL SEA SYSTEMS COMMAND.

DISTRIBUTION STATEMENT C: DISTRIBUTION AUTHORIZED TO U.S. GOVERNMENT AGENCIES AND THEIR CONTRACTORS: OTHER REQUESTS MUST BE REFERRED TO COMNAVSEA OR THE COGNIZANT NAVSEA CODE.

WARNING: THIS DOCUMENT CONTAINS TECHNICAL DATA WHOSE EXPORT IS RESTRICTED BY THE ARMS EXPORT CONTROL ACT (TITLE 22, U.S.C. SEC. 2751 ET SEQ.) OR EXECUTIVE ORDER 12470. VIOLATIONS OF THESE EXPORT LAWS ARE SUBJECT TO SEVERE CRIMINAL PENALTIES.

DESTRUCTION NOTICE: DESTROY BY ANY METHOD THAT WILL PREVENT DISCLOSURE OF CONTENTS OR RECONSTRUCTION OF THE DOCUMENT.

APPLICATION	
NEXT ASSY	USED ON
8287500	8287500

MATERIAL:
PC 10,11 & 13-22
CRES
PC 12
BRASS OR BRONZE

UNLESS OTHERWISE SPECIFIED:
ALL DIMENSIONS ARE IN INCHES
TOLERANCES: ANGLES±
FRACTIONS±
DECIMALS
.XX±
.XXX±
BEND RADII
FILLETS & ROUNDS
SURFACE FINISH √
BREAK ALL SHARP EDGES
INTERPRET DRAWING IN ACCORDANCE WITH STANDARDS PRESCRIBED IN ASME Y14.100
DO NOT SCALE THIS DRAWING

PORT HUENEME DIVISION
NAVAL SURFACE WARFARE CENTER
4363 MISSILE WAY
PORT HUENEME, CA 93043-4307

PREPARED	AMSEC	06-07
CHECKED		
TECH LEAD		
BR HD		
ACCEPTED BY NAVSEA		(SIGNATURE DOES NOT DENOTE APPROVAL)
APPROVED FOR NAVSEA		(SIGN ONLY IF ENGINEERING HAS BEEN "PROVED" BY MANUFACTURE AND TEST)

DEPARTMENT OF THE NAVY
NAVAL SEA SYSTEMS COMMAND
WASHINGTON,D.C. 20376-5160

HEAVY UNREP – NAVY STANDARD
RAM TENSIONER

SUPPLY TANK ASSEMBLY

SIZE	CAGE CODE	NAVSEA DWG. NO.	REV
F	53711	8287504	–

SCALE 1/4 | UNIT WT 110.0 LBS | SHEET 1 OF 1

NSWC 4120/1A (REV. 03-92)

NOTES:

1. PRIOR TO ASSEMBLY, APPLY LED-PLATE ANTISEIZE COMPOUND, PC 14, TO ALL THREADS. FOLLOW MANUFACTURER'S INSTRUCTIONS FOR APPLICATION.

2. THE FOLLOWING ITEM SHALL BE PROCURED FROM THE VENDOR LISTED. A SUBSTITUTE ITEM SHALL NOT BE USED WITHOUT PRIOR APPROVAL BY THE NAVY.

2.1. PC 14 ANTISEIZE COMPOUND, LED-PLATE
APPROVED SOURCE OF SUPPLY:
ARMITE LABORATORIES INC
1560 SUPERIOR AVE STE A4
COSTA MESA, CA 92627-3676
CODE IDENT: 84180
PART NO LP-250 (MEETS MIL-PRF-907)

3. BULK ITEM (PC 14 AND 15) FIND NUMBERS ARE NOT SHOWN ON THE FACE OF THE DRAWING.

4. APPLY O-RING LUBRICANT, PC 15, TO O-RING, PC 7, TO MATING SURFACES AND GROOVES. FOLLOW MANUFACTURER'S INSTRUCTIONS FOR APPLICATION.

4.1 PETROLEUM BASED O-RING LUBRICANTS SHALL NOT BE USED OR SUBSTITUTED FOR PC 15.

5. THE FOLLOWING ITEM(S) MAY BE PROCURED FROM THE VENDOR(S) LISTED.

5.1 PC 15: O-RING LUBRICANT (SILICONE),
APPROVED SOURCE OF SUPPLY:
PARKER HANNIFIN CORP, O-RING DIVISION
2360 PALUMBO DRIVE
LEXINGTON, KY 40509-1048
CAGE CODE: 02697
TRADE NAME: PARKER SUPER O-LUBE

REVISIONS				
ZONE	LTR	DESCRIPTION	DATE	APPROVED

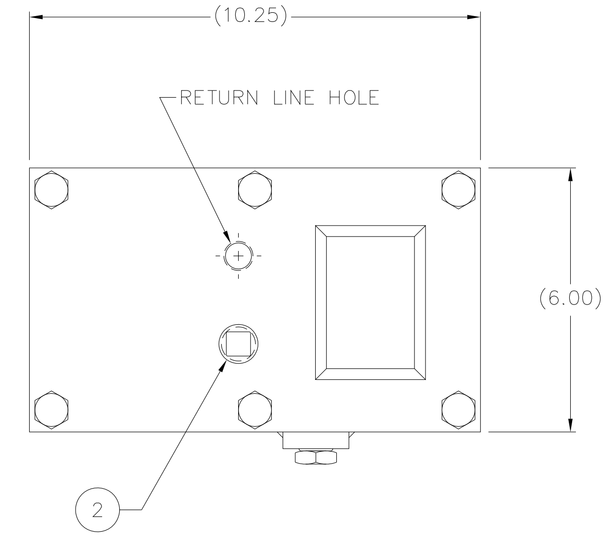

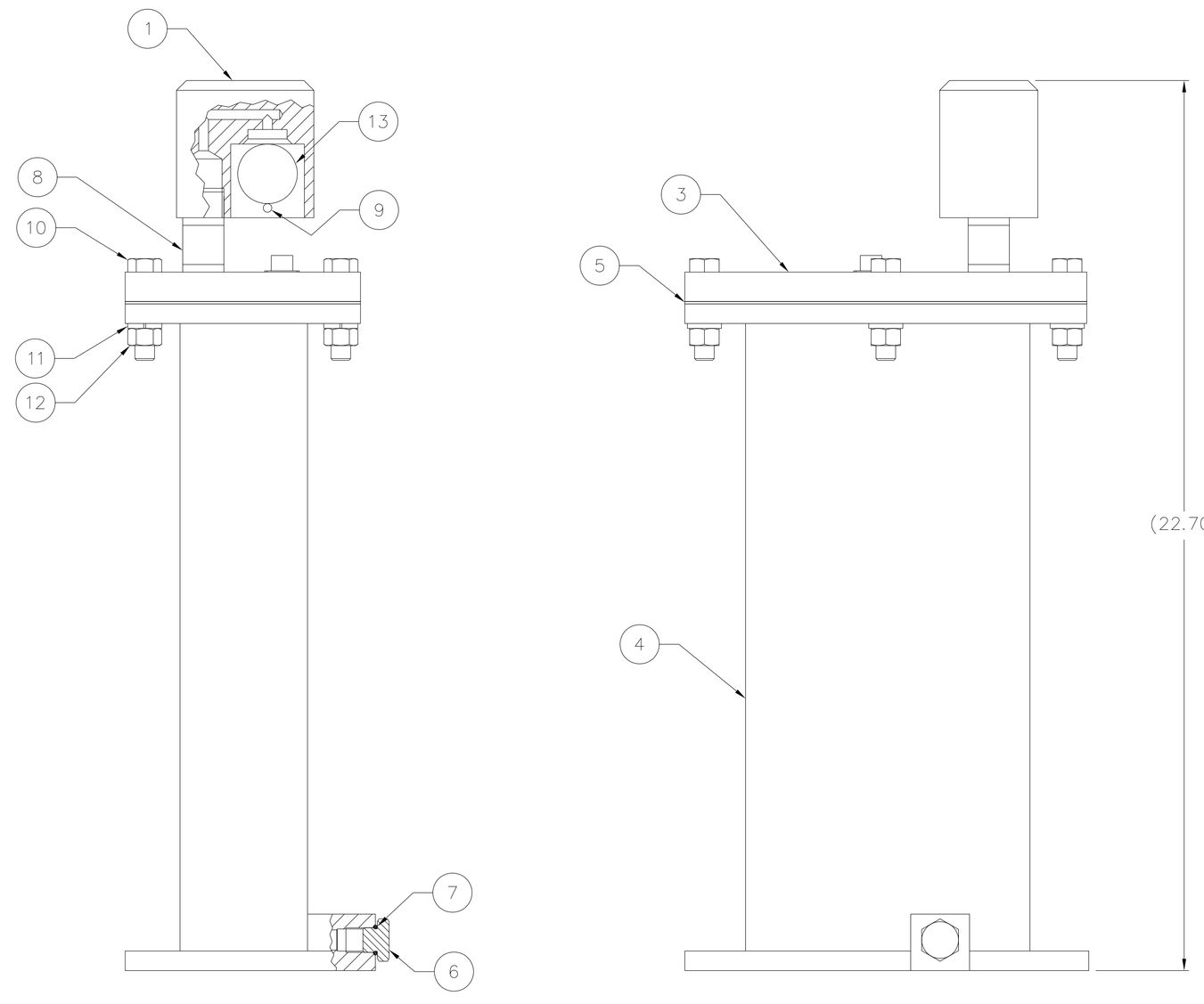

PART OR IDENTIFYING NO.	QTY REQD	CODE IDENT NO.	DRAWING OR SPECIFICATION	NOMENCLATURE OR DESCRIPTION	REMARKS
15	AR	02697		O-RING LUBRICANT	SEE NOTES 4 AND 5
14	AR		MIL-PRF-907	ANTISEIZE COMPOUND	SEE NOTES 1 AND 2
13	1	–	COMMERCIAL	CHECK BALL (1-1/2 DIA)	TABLE TENNIS BALL
12	1	–	MS51971-5	HEX NUT	1/2-13 UNC-2B
11	1	–	NASM35338-143	LOCK SPRING WASHER	1/2 NOM
10	1	–	NASM35307-416	HEX HD CAP SCREW	1/2-13 UNC-2A X 2-1/4 LG
9	1	–	NASM16562-249	SPRING-TUBULAR SLOTTED PIN	.219 DIA X 2.5 LG
8	1	–	ASTM A733	PIPE NIPPLE, 3/4 NPT	A733S-102SS, 2-1/2 LG
7	1	–	SAE AS568-906	O-RING, FKM (VITON) 90 HDNS	.468 ID X .078 W
6	1	–	SAE J514	HEX HD PLUG	9/16-18 UNF-2A
5	1	–	8287545	RETURN TANK GASKET	
4	1	–	8287543	RETURN TANK	
3	1	–	8287542	RETURN TANK COVER	
2	1	–	8287541	TANK DIPSTICK	
1	1	–	6519140	BREATHER HOUSING	

PARTS LIST

8287505

NOTICE OF CONFIGURATION CONTROL

THIS DRAWING DEFINES AN ITEM OF UNDERWAY REPLENISHMENT (UNREP) STANDARD HARDWARE. NO REVISION TO THIS DRAWING OR THE HARDWARE REPRESENTED BY IT IS AUTHORIZED WITHOUT THE WRITTEN APPROVAL OF THE NAVAL SEA SYSTEMS COMMAND.

DISTRIBUTION STATEMENT C: DISTRIBUTION AUTHORIZED TO U.S. GOVERNMENT AGENCIES AND THEIR CONTRACTORS; OTHER REQUESTS MUST BE REFERRED TO COMNAVSEA OR THE COGNIZANT NAVSEA CODE.

WARNING: THIS DOCUMENT CONTAINS TECHNICAL DATA WHOSE EXPORT IS RESTRICTED BY THE ARMS EXPORT CONTROL ACT (TITLE 22, U.S.C. SEC. 2751 ET SEQ.) OR EXECUTIVE ORDER 12470. VIOLATIONS OF THESE EXPORT LAWS ARE SUBJECT TO SEVERE CRIMINAL PENALTIES.

DESTRUCTION NOTICE: DESTROY BY ANY METHOD THAT WILL PREVENT DISCLOSURE OF CONTENTS OR RECONSTRUCTION OF THE DOCUMENT.

APPLICATION	
NEXT ASSY	USED ON
8287500	8287500

MATERIAL:
PC 6, 8-12:
CRES

UNLESS OTHERWISE SPECIFIED:
ALL DIMENSIONS ARE IN INCHES
TOLERANCES: ANGLES±
FRACTIONS±
DECIMALS
.XX±
.XXX±
BEND RADII
FILLETS & ROUNDS
SURFACE FINISH ✓
BREAK ALL SHARP EDGES
INTERPRET DRAWING IN ACCORDANCE WITH STANDARDS PRESCRIBED IN ASME Y14.100
DO NOT SCALE THIS DRAWING

PORT HUENEME DIVISION
NAVAL SURFACE WARFARE CENTER
4363 MISSILE WAY
PORT HUENEME, CA 93043-4307

PREPARED	AMSEC	06-07
CHECKED		
TECH LEAD		
BR HD		
ACCEPTED BY NAVSEA		(SIGNATURE DOES NOT DENOTE APPROVAL)
APPROVED FOR NAVSEA		(SIGN ONLY IF ENGINEERING HAS BEEN "PROVED" BY MANUFACTURE AND TEST)

DEPARTMENT OF THE NAVY
NAVAL SEA SYSTEMS COMMAND
WASHINGTON,D.C. 20376-5160

HEAVY UNREP – NAVY STANDARD
RAM TENSIONER

RETURN TANK ASSEMBLY

SIZE	CAGE CODE	NAVSEA DWG. NO.	REV
F	53711	8287505	–

SCALE 1/2 | UNIT WT 35.0 LBS | SHEET 1 OF 1

NSWC 4120/1A (REV. 03-92)

NOTES:

1. PAINT ALL EXTERIOR SURFACES, EXCEPT THOSE NOTED "DO NOT PAINT" WITH PROCEDURES AND MATERIALS SPECIFIED IN PC 2 USING SPECIAL PROCEDURE FOR RAM TENSIONERS.

REVISIONS				
ZONE	LTR	DESCRIPTION	DATE	APPROVED

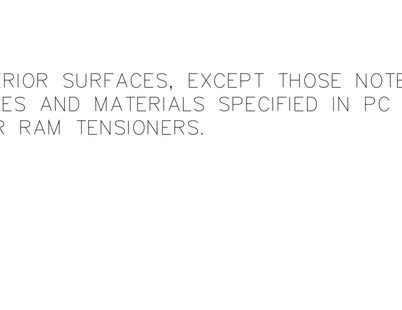

DETAIL A
SCALE: 1/2

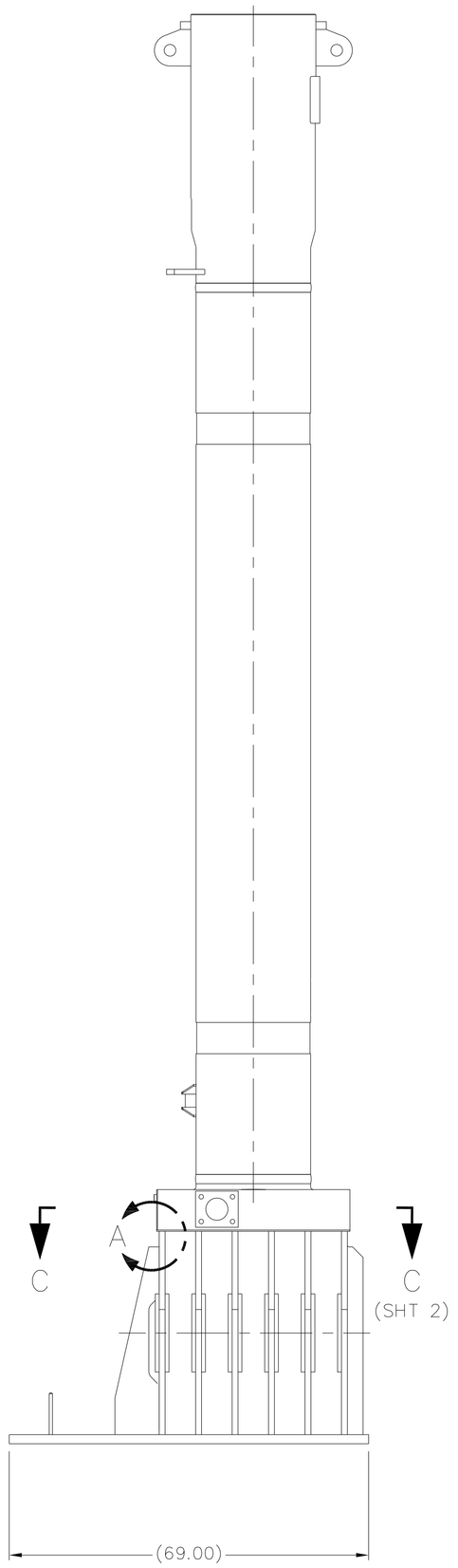

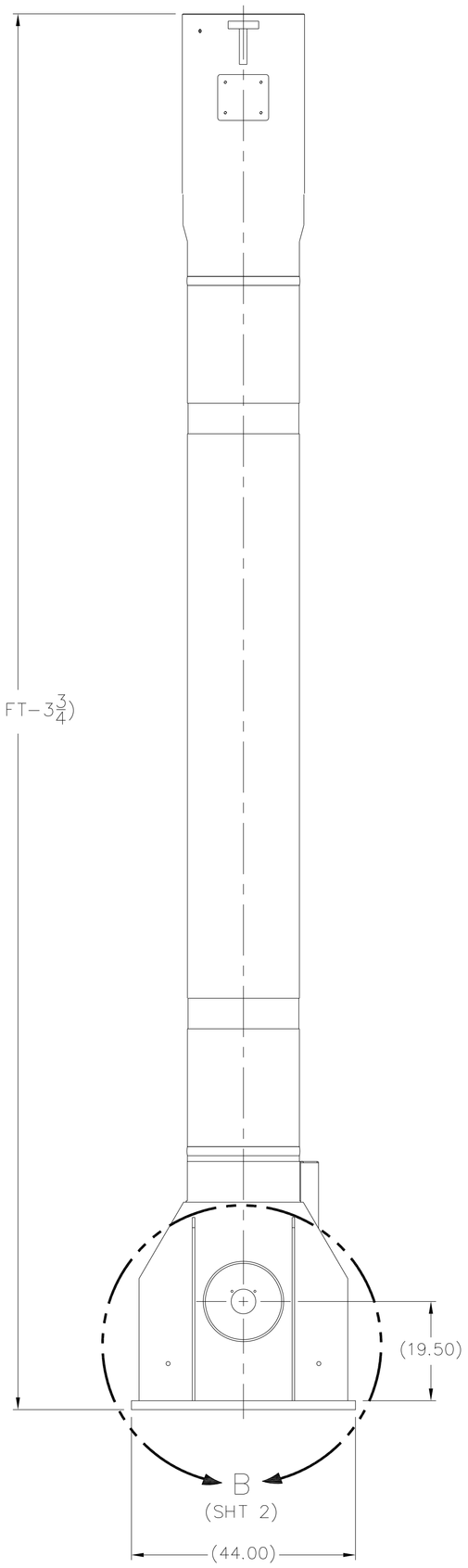

PART OR IDENTIFYING NO.	QTY REQD	CODE IDENT NO.	DRAWING OR SPECIFICATION	NOMENCLATURE OR DESCRIPTION	REMARKS
2	AR	53711	5210545	STD PAINT PROCEDURE–UNREP	SEE NOTE 1
1	1	53711	8287507	RAM CYLINDER WELDMENT	

PARTS LIST

NOTICE OF CONFIGURATION CONTROL

THIS DRAWING DEFINES AN ITEM OF UNDERWAY REPLENISHMENT (UNREP) STANDARD HARDWARE. NO REVISION TO THIS DRAWING OR THE HARDWARE REPRESENTED BY IT IS AUTHORIZED WITHOUT THE WRITTEN APPROVAL OF THE NAVAL SEA SYSTEMS COMMAND.

APPLICATION	
NEXT ASSY	USED ON
8287501	8287500

MATERIAL:

UNLESS OTHERWISE SPECIFIED:
ALL DIMENSIONS ARE IN INCHES
TOLERANCES: ANGLES± FRACTIONS± DECIMALS .XX± .03 .XXX± .010
BEND RADII
FILLETS & ROUNDS 250
SURFACE FINISH
BREAK ALL SHARP EDGES
INTERPRET DRAWING IN ACCORDANCE WITH STANDARDS PRESCRIBED IN ASME Y14.100
DO NOT SCALE THIS DRAWING

PORT HUENEME DIVISION
NAVAL SURFACE WARFARE CENTER
4363 MISSILE WAY
PORT HUENEME, CA 93043–4307

PREPARED	AMSEC	06–07
CHECKED		
TECH LEAD		
BR HD		
ACCEPTED BY NAVSEA		(SIGNATURE DOES NOT DENOTE APPROVAL)
APPROVED FOR NAVSEA		(SIGN ONLY IF ENGINEERING HAS BEEN "PROVED" BY MANUFACTURE AND TEST)

DEPARTMENT OF THE NAVY
NAVAL SEA SYSTEMS COMMAND
WASHINGTON,D.C. 20376–5160

HEAVY UNREP–NAVY STANDARD
RAM TENSIONER

RAM CYLINDER

SIZE	CAGE CODE	NAVSEA DWG. NO.	REV
F	53711	8287506	–

SCALE 1/16 | UNIT WT 15130 LBS | SHEET 1 OF 2

						–	–
6	5	4	3	2	1		

SHEET NUMBER

REVISION STATUS OF SHEETS

8287506

NSWC 4120/7A (REV. 03–92)

REVISIONS				
ZONE	LTR	DESCRIPTION	DATE	APPROVED

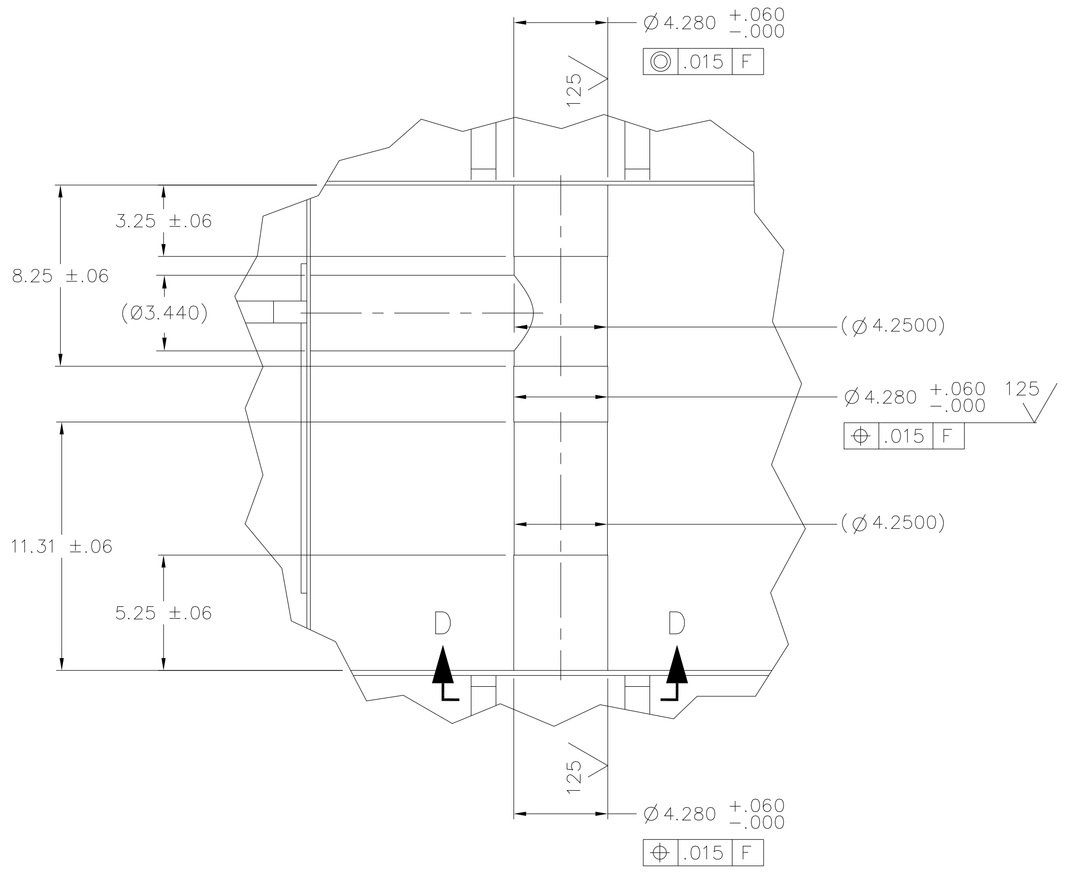

DETAIL F
SCALE: 1/4

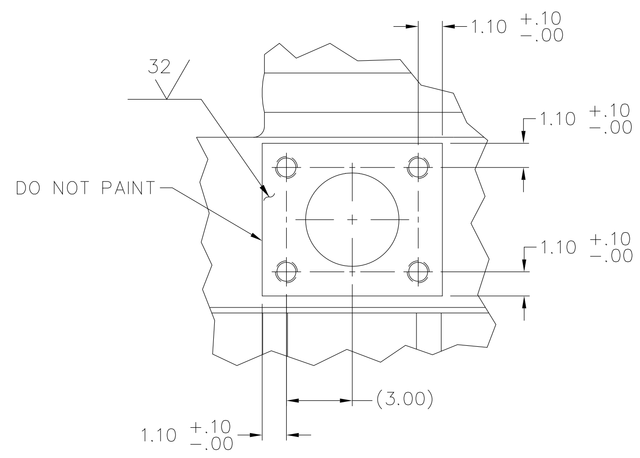

VIEW D–D
(3 PLACES)
SCALE: 1/4

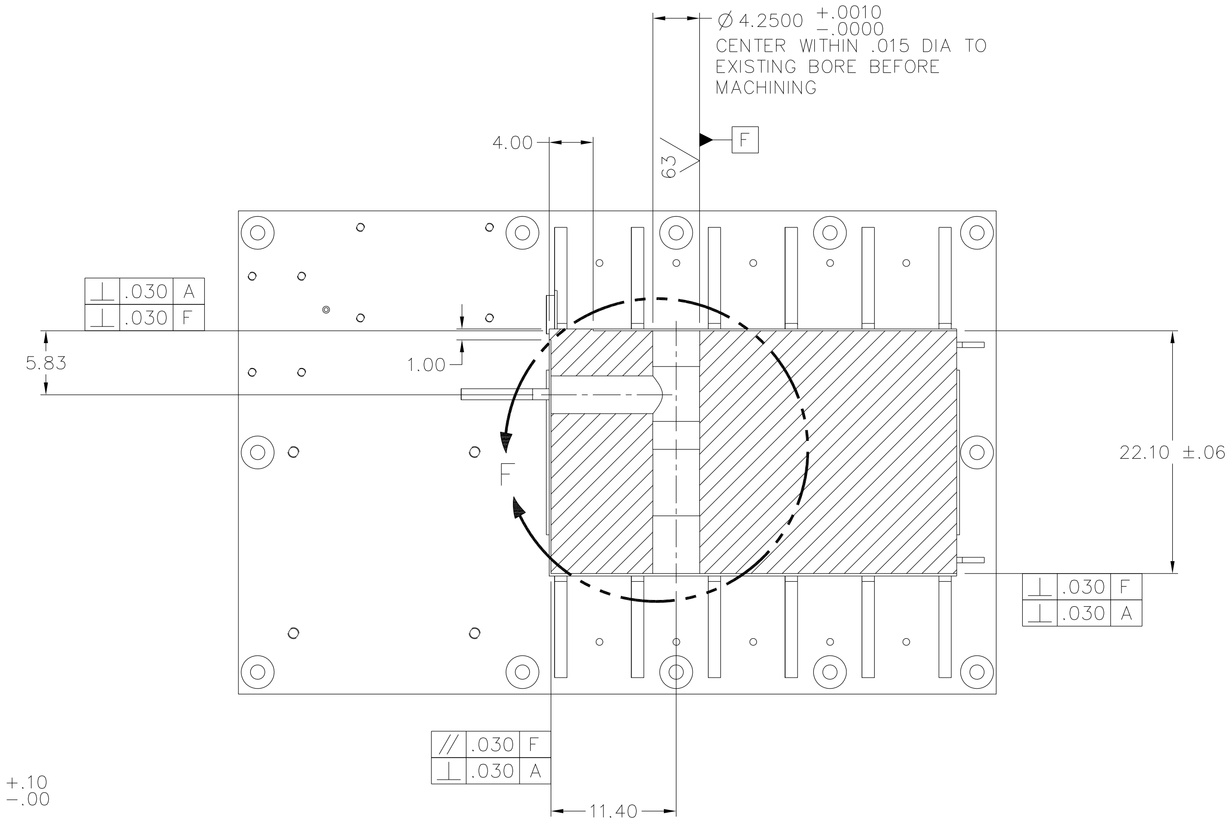

SECTION C–C

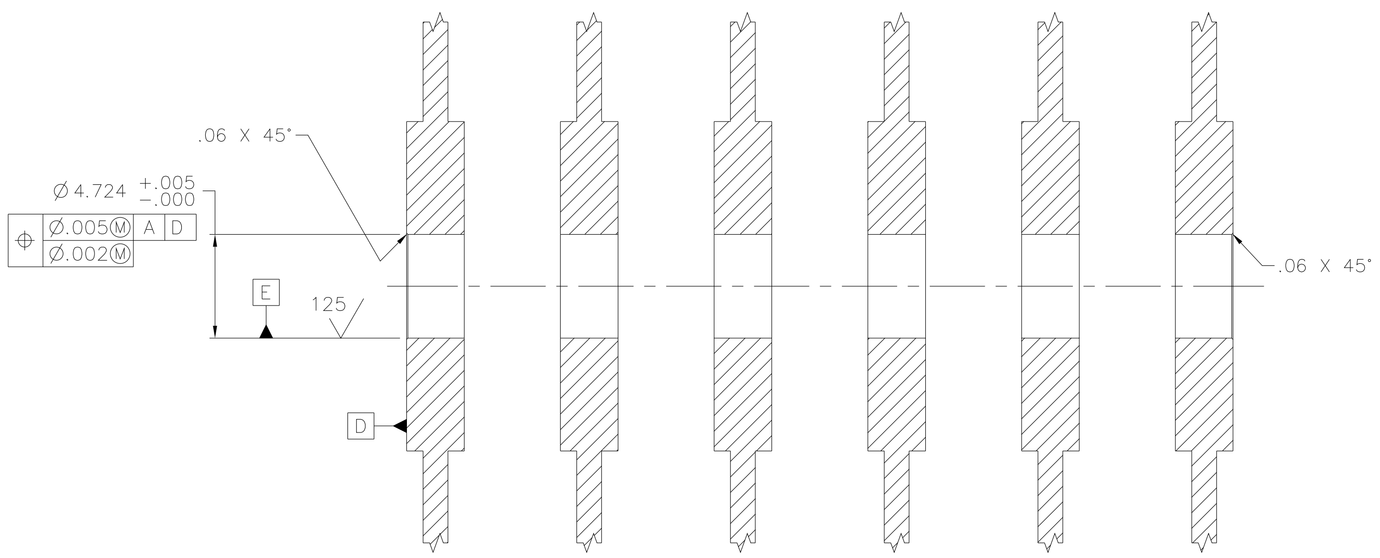

SECTION E–E
SCALE: 1/4

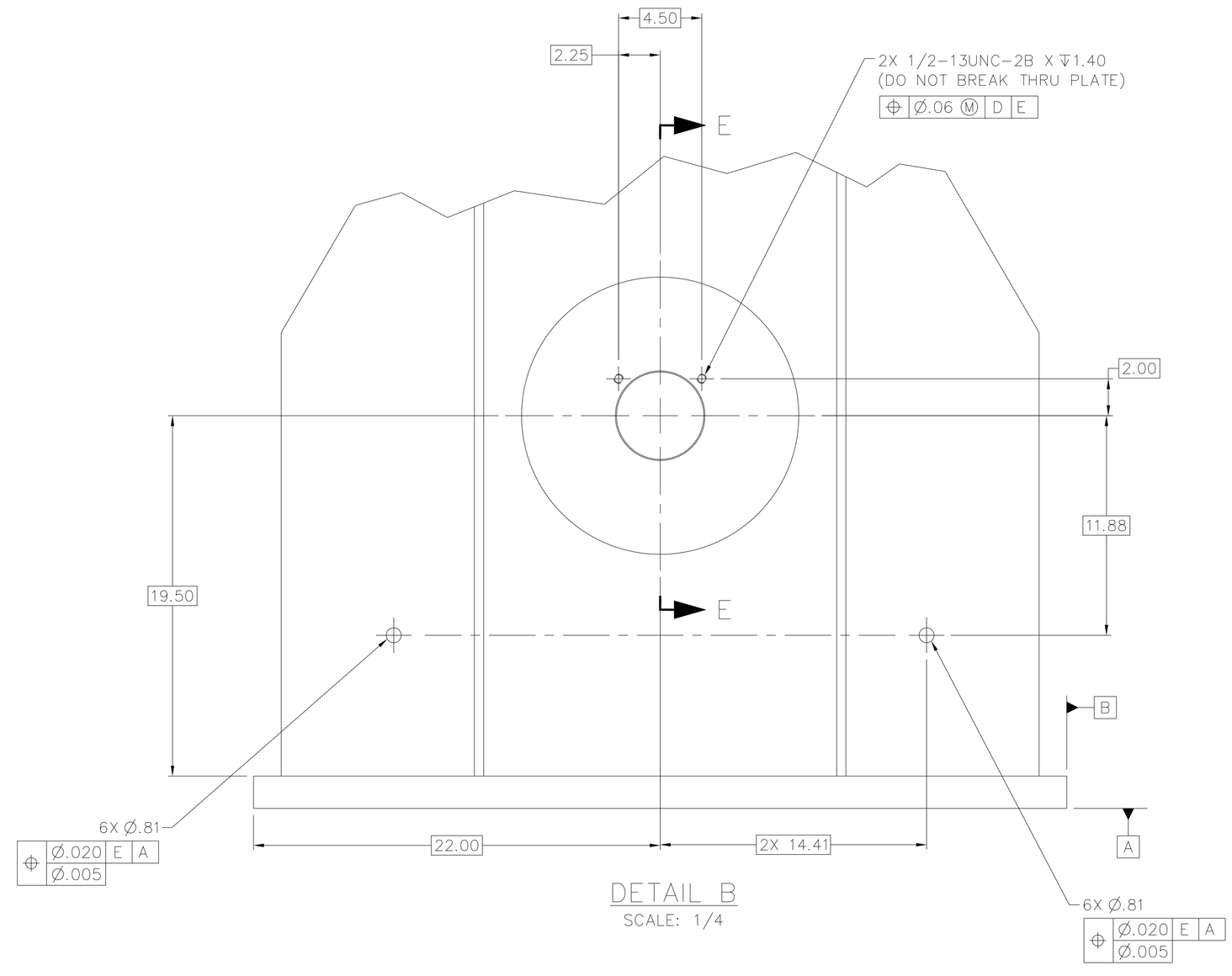

DETAIL B
SCALE: 1/4

8287506

SIZE	CAGE CODE	NAVSEA DWG. NO.	REV
F	53711	8287506	–
SCALE 1/8	UNIT WT ——	SHEET 2	

NSWC 4120/1A (REV. 03–92)

NSNC 4120/7A (REV. 03-92)

NOTICE OF CONFIGURATION CONTROL

THIS DRAWING DEFINES AN ITEM OF UNDERWAY REPLENISHMENT (UNREP) STANDARD HARDWARE. NO REVISION TO THIS DRAWING OR THE HARDWARE REPRESENTED BY IT IS AUTHORIZED WITHOUT THE WRITTEN APPROVAL OF THE NAVAL SEA SYSTEMS COMMAND.

DISTRIBUTION STATEMENT C: DISTRIBUTION AUTHORIZED TO U.S. GOVERNMENT AGENCIES AND THEIR CONTRACTORS; OTHER REQUESTS MUST BE REFERRED TO COMNAVSEA OR THE COGNIZANT NAVSEA CODE.

WARNING: THIS DOCUMENT CONTAINS TECHNICAL DATA WHOSE EXPORT IS RESTRICTED BY THE ARMS EXPORT CONTROL ACT (TITLE 22, U.S.C. 2751 ET SEQ.) OR EXECUTIVE ORDER 12470. VIOLATIONS OF THESE EXPORT LAWS ARE SUBJECT TO SEVERE CRIMINAL PENALTIES.

DESTRUCTION NOTICE: DESTROY BY ANY METHOD THAT WILL PREVENT DISCLOSURE OF CONTENTS OR RECONSTRUCTION OF THE DOCUMENT.

NOTES:

1. WELDING REQUIREMENTS:

1.1 FABRICATION, WELDING, STRESS RELIEF AND INSPECTION SHALL BE IN ACCORDANCE WITH NAVSEA S9074-AR-GIB-010/278 AND T9074-AS-GIB-010/271, CLASS M-2, CATEGORY A. ALL WELDS ON THIS DRAWING ARE CLASSIFIED AS CATEGORY A AND REQUIRE EITHER MAGNETIC PARTICLE (MT) OR ULTRASONIC (UT) INSPECTION.

1.2 WELD INSPECTION STARTS AT ROOT WELD IAW TECHNICAL PUBLICATIONS LISTED IN 1.1 ABOVE.

1.3 UNLESS OTHERWISE SPECIFIED ON THIS DRAWING, ALL DIMENSIONS AND TOLERANCES REFER TO FINISHED PRODUCT.

2. DIMENSIONS PROVIDED IN REMARKS COLUMN OF PARTS LIST ARE REFERENCE ONLY UNLESS THERE IS NO DETAILED VIEW WHICH SPECIFIES REQUIRED DIMENSIONS.

3. LOWER SHEAVE HOUSING WELDMENT (PC 3-6, 10, 12 AND 16-18, SHEET 3)

3.1 JIG LOCATE SIDE PLATES, PC 4 AND PC 5, DURING WELDING AND STRESS RELIEF TO HOLD THE TOLERANCES SHOWN IN SECT D-D, SHEET 3.

3.2 STRESS RELIEVE LOWER SHEAVE HOUSING WELDMENT PER SAE-AMS-H-6875 OR AWS-D1.1, PARA 4.4, BEFORE WELDING TO CYLINDERS, PC 1 AND PC 2.

3.3 STRAIGHTEN BEDPLATE, PC 6 TO .10 INCH FLATNESS TOLERANCE BEFORE MACHINING TO 1.60 FINISH DIMENSION SHOWN IN SECT D-D, SHEET 3.

3.4 HOT DIP GALVANIZE LOWER SHEAVE HOUSING WELDMENT IN ACCORDANCE WITH ASTM A153 TO A PLATING THICKNESS OF .003 TO .004 INCH. DO NOT GALVANIZE CYLINDERS, PC 1 OR 2, OR ATTACHED PARTS.

4. ORIENT UPPER RAM CYLINDER, PC 1, WITH THE .562-18UNF HOLES LOCATED AS SHOWN ON SHEET 2 BEFORE WELDING.

5. CONDUCT 100% ULTRASONIC OR RADIOGRAPHIC INSPECTION OF THE WELDS REFERENCING THIS NOTE IN ACCORDANCE WITH BOILER AND PRESSURE VESSEL CODE, APPENDIX 12.

6. STOCK SIZE IN REMARKS COLUMN OF PARTS LIST IS NOMINAL WITHOUT MANUFACTURING ALLOWANCE.

ISOMETRIC VIEW
SCALE: NONE

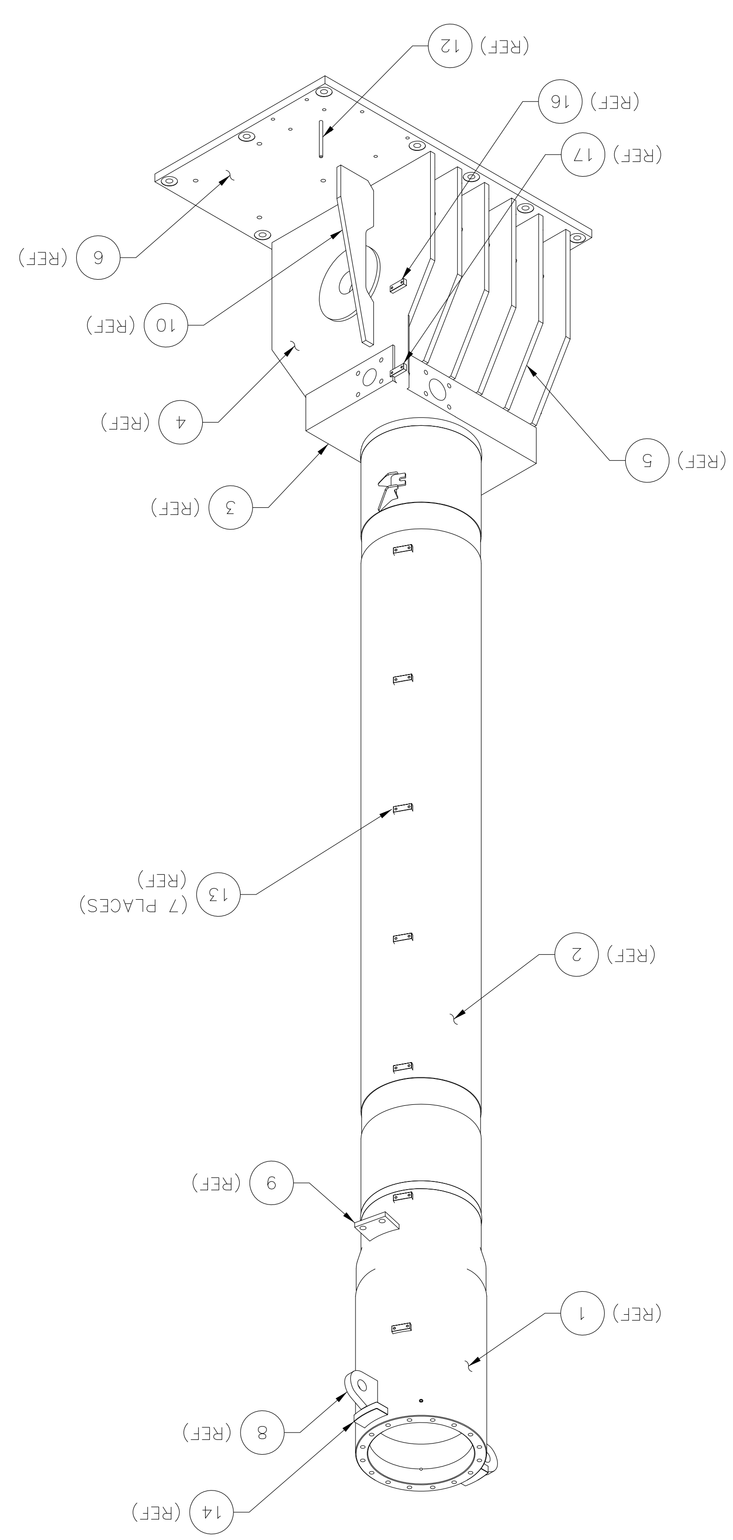

PART OR IDENTIFYING NO.	QTY REQD	DRAWING CODE IDENT NO.	DRAWING OR SPECIFICATION	NOMENCLATURE OR DESCRIPTION	REMARKS
1	1	53711	8287512	UPPER RAM CYLINDER	
2	1	53711	8287511	LOWER RAM CYLINDER	
3	1	53711	8287510	FLOW CONTROL VALVE BLOCK	
4	2	53711	8287509-1	OUTER SHEAVE PLATE	
5	4	53711	8287509-2	INNER SHEAVE PLATE	
6	1	53711	8287508	BEDPLATE	
7	1		–	PLATE	2 X 9 X 10
8	2		–	PLATE	1-1/2 X 7 X 7
9	1		–	PLATE	1 X 6-1/4 X 6-5/8
10	1		–	PLATE	1 X 8-1/2 X 36
11	2		–	FLAT BAR	1/2 X 3 X 36
12	1		–	ROUND BAR	5/8 DIA X 8
13	7		–	FLAT BAR	3/4 X 1-1/4 X 3-1/2
14	2		–	PLATE	1-1/2 X 3 X 6
15	1		–	FLAT BAR	3/8 X 2-1/2 X 5-7/16
16	1		–	FLAT BAR	3/4 X 1-1/4 X 3-1/2
17	1		–	FLAT BAR	1 X 1-1/4 X 3-1/2
18	1		–	FLAT BAR	1/4 X 3-1/2 X 16-3/8
19	1		–	PLATE	1/4 X 5 X 5 1/4
20	1		–	PLATE	1/4 X 5 X 5 1/4

PARTS LIST

APPLICATION	
NEXT ASSY	USED ON
8287506	8287500

MATERIAL:
ITEM 8-12, 14 & 18 STEEL PER ASTM A36 OR LOW ALLOY HIGH STRENGTH STEEL PER ASTM A572 OR ASTM A588 GRADE B ITEMS 7, 12, 15, 16, 17, 19 AND 20 CRES ASTM 240 GRADE 316L

UNLESS OTHERWISE SPECIFIED:
ALL DIMENSIONS ARE IN INCHES
TOLERANCES: ANGLES ± .5°
FRACTIONS ± DECIMALS ± .XX ± .02 .XXX ± .005
BEND RADII 250 SURFACE FINISH
FILLETS & ROUNDS BREAK ALL SHARP EDGES
INTERPRET DRAWING IN ACCORDANCE WITH STANDARDS PRESCRIBED IN ASME Y14.100

DO NOT SCALE THIS DRAWING

REVISION STATUS OF SHEETS

SHEET NUMBER	1	2	3	4	5	6
	–	–	–	–		

PORT HUENEME DIVISION
NAVAL SURFACE WARFARE CENTER
4363 MISSILE WAY
PORT HUENEME, CA 93043-4307

DEPARTMENT OF THE NAVY
NAVAL SEA SYSTEMS COMMAND
WASHINGTON D.C. 20376-5160

HEAVY UNREP-NAVY STANDARD
RAM TENSIONER

RAM CYLINDER WELDMENT

SIZE	CAGE CODE	NAVSEA DWG. NO.	REV
F	53711	8287507	–

SCALE NOTED | UNIT WT 15210 LBS | SHEET 1 OF 4

PREPARED	AMSEC	06-07	
CHECKED			
TECH LEAD			
BR HD			
ACCEPTED BY NAVSEA	(SIGNATURE DOES NOT DENOTE APPROVAL)		
APPROVED FOR NAVSEA	(SIGN ONLY IF ENDORSING HAS BEEN "INSPECTED" BY MANUFACTURE AND TEST)		

REVISIONS			
ZONE	LTR	DESCRIPTION	DATE	APPROVED

8287507

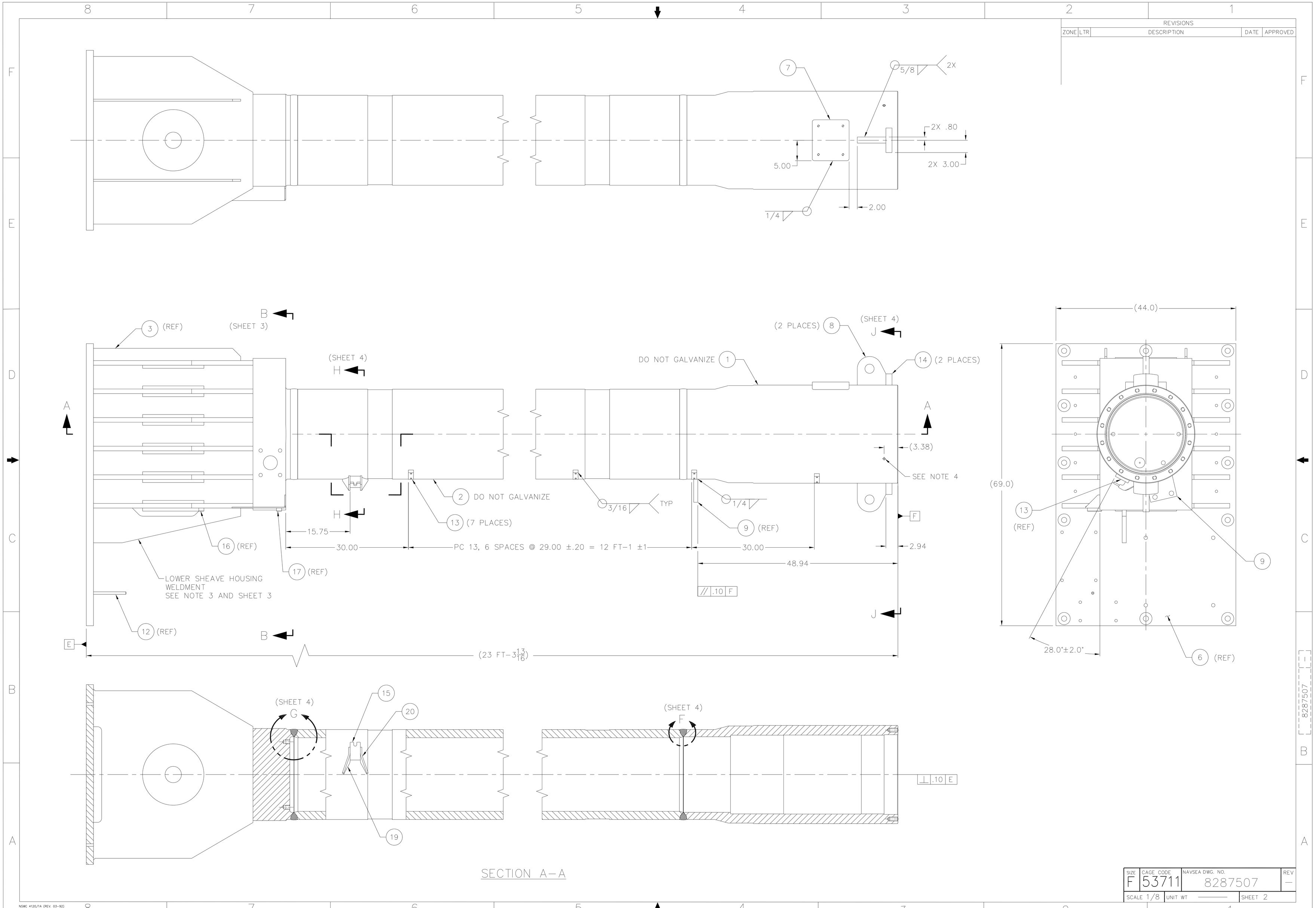

REVISIONS
ZONE LTR DESCRIPTION DATE APPROVED
7
5/8
2X
2X .80
2X 3.00
5.00
2.00
1/4
3 (REF)
B
(SHEET 3)
(SHEET 4)
H
A
DO NOT GALVANIZE 1
(2 PLACES) 8
(SHEET 4)
J
14 (2 PLACES)
(3.38)
SEE NOTE 4
2 DO NOT GALVANIZE
13 (7 PLACES)
3/16
TYP
1/4
9 (REF)
F
2.94
15.75
30.00
PC 13, 6 SPACES @ 29.00 ±.20 = 12 FT-1 ±1
30.00
48.94
16 (REF)
17 (REF)
LOWER SHEAVE HOUSING
WELDMENT
SEE NOTE 3 AND SHEET 3
.10 F
12 (REF)
E
(23 FT-3 13/16)
(44.0)
(69.0)
13
(REF)
9
28.0°±2.0°
6 (REF)
(SHEET 4)
G
15
20
19
(SHEET 4)
F
.10 E
SECTION A-A
8287507
SIZE F
CAGE CODE 53711
NAVSEA DWG. NO. 8287507
REV –
SCALE 1/8
UNIT WT
SHEET 2
NSWC 4120/1A (REV. 03-92)

NSWC 4120/7A (REV. 03-92)

SIZE	CAGE CODE	NAVSEA DWG. NO.	REV
F	53711	8287507	—

SCALE 1/8 | UNIT WT ——— | SHEET 3

8287507

ISOMETRIC VIEW
LOWER SHEAVE HOUSING WELDMENT
SCALE: NONE

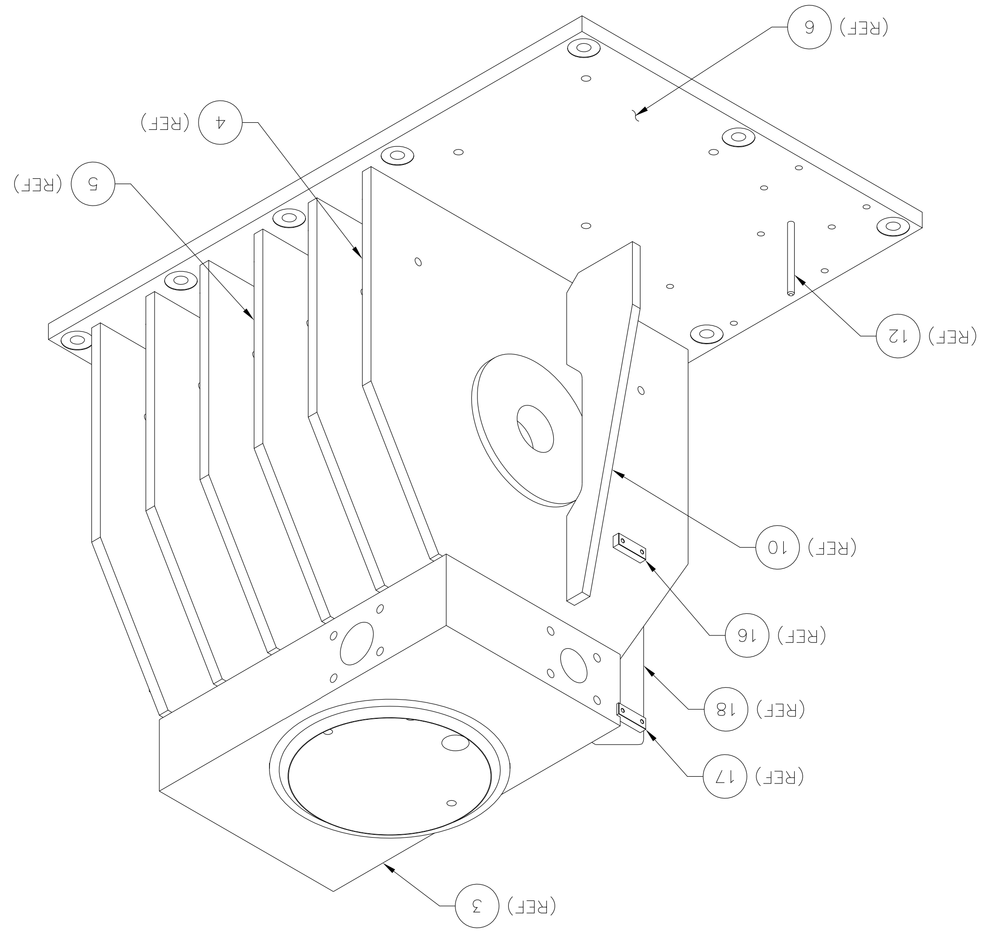

DETAIL E
SCALE: 1/2

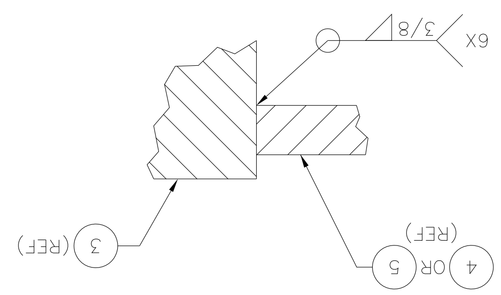

SECTION B–B
SEE NOTE 3

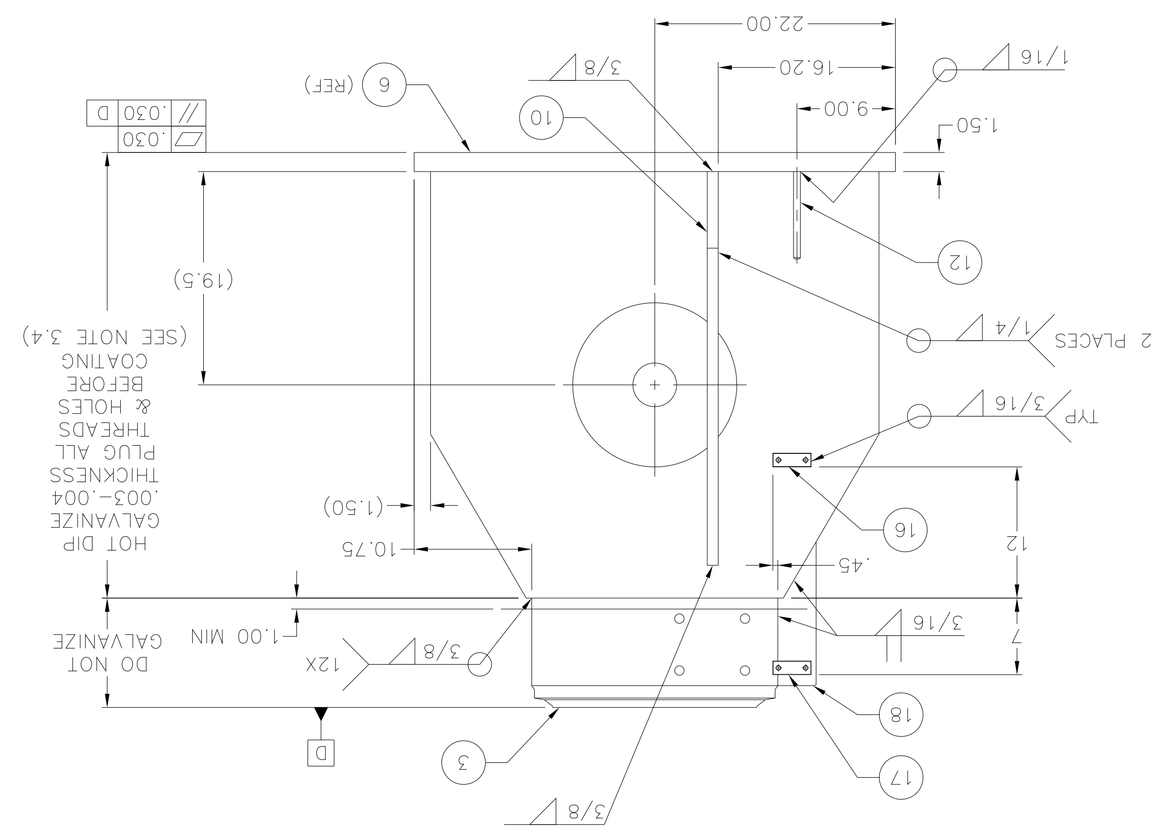

SECTION D–D

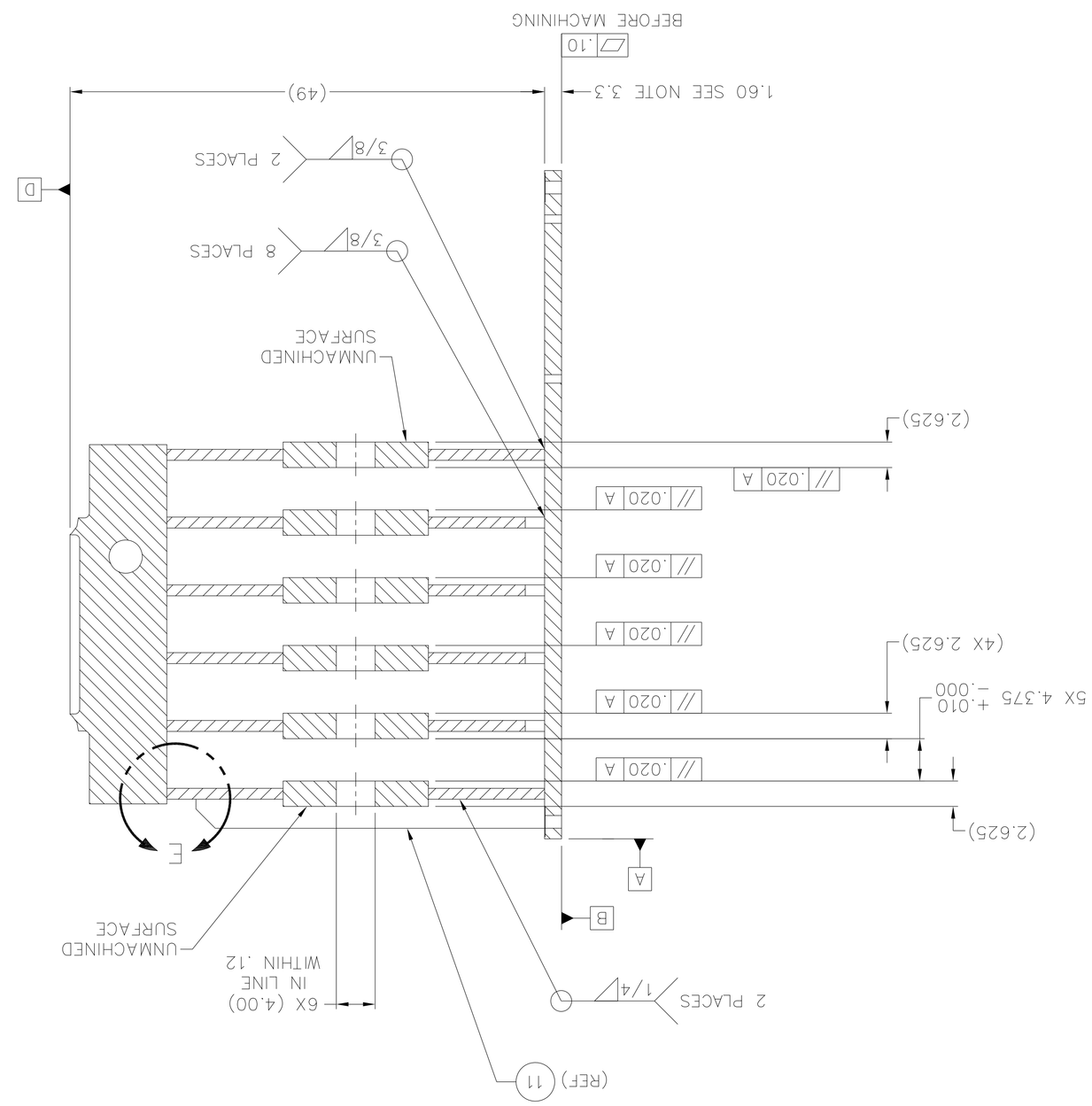

SECTION C–C

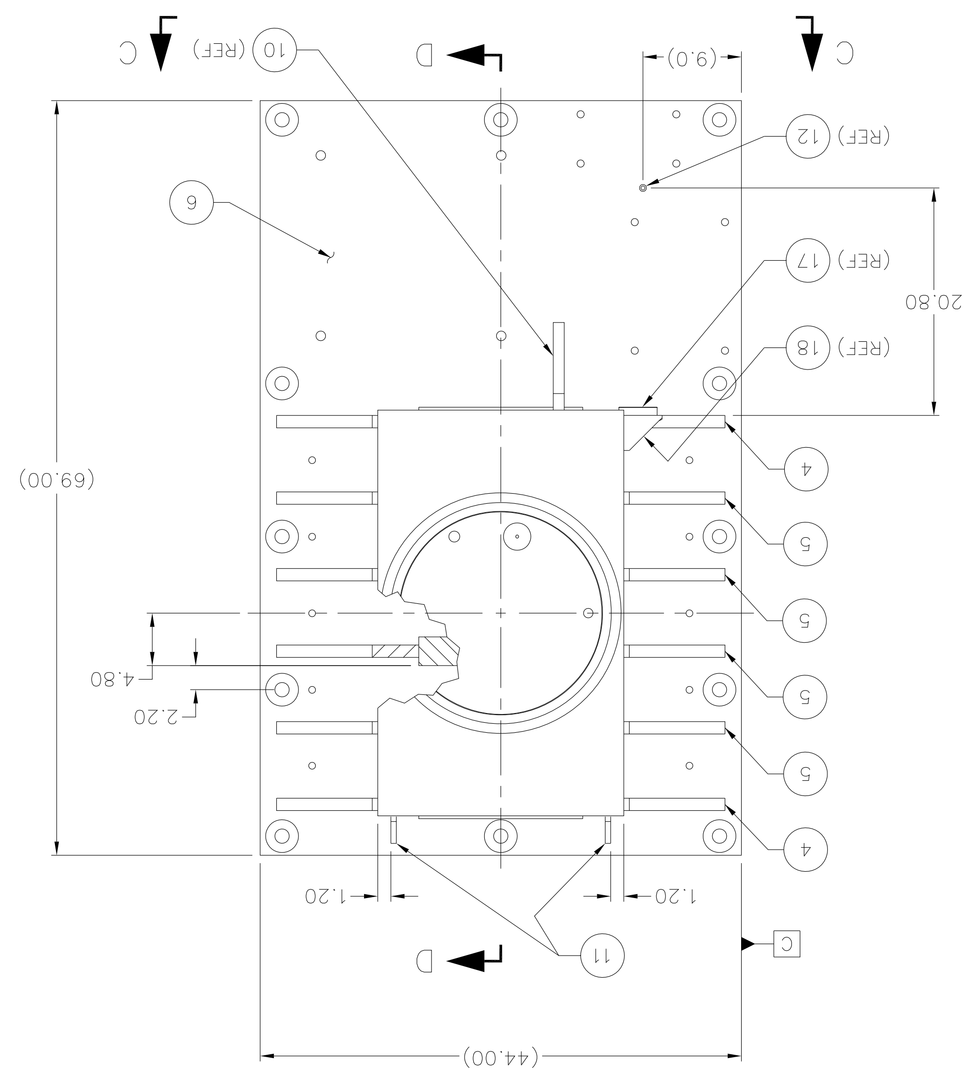

REVISIONS			
ZONE	LTR	DESCRIPTION	DATE	APPROVED

REVISIONS				
ZONE	LTR	DESCRIPTION	DATE	APPROVED

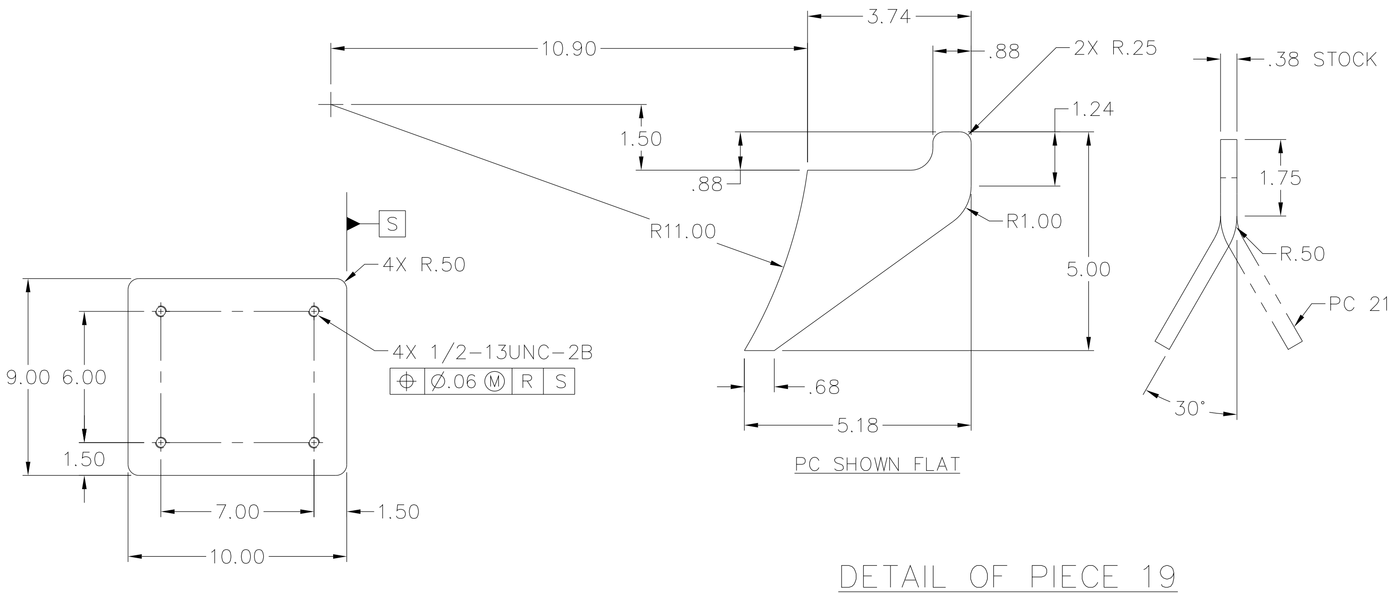

DETAIL OF PIECE 19
DETAIL OF PIECE 20 SIM BUT OPP
SCALE: 1/2

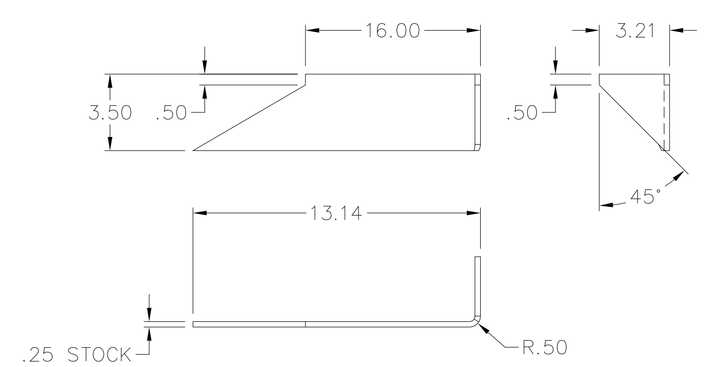

DETAIL OF PIECE 18
SCALE: 1/4

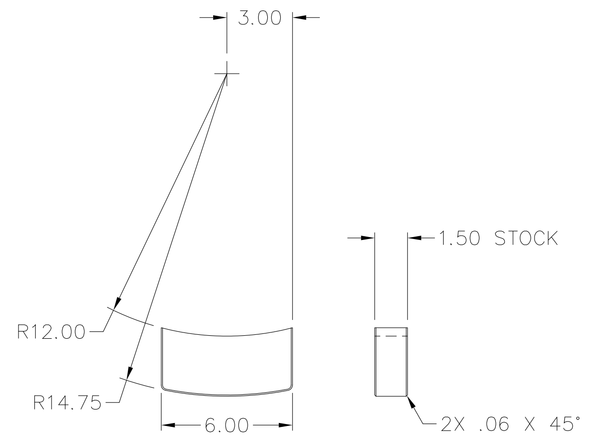

DETAIL OF PIECE 14
SCALE: 1/4

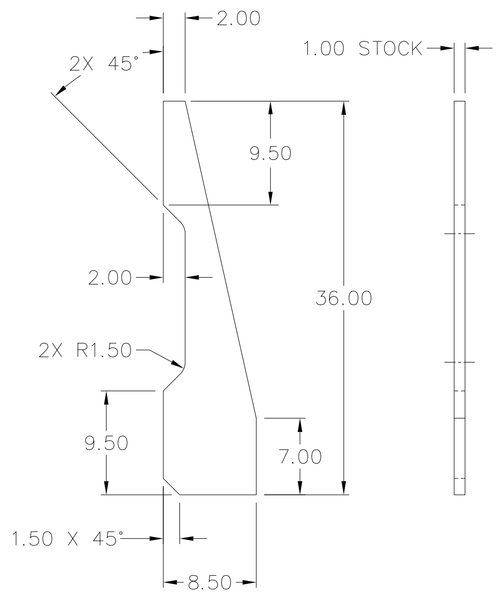

DETAIL OF PIECE 10

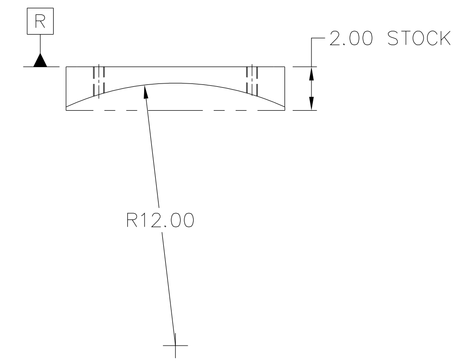

DETAIL OF PIECE 7
SCALE: 1/4

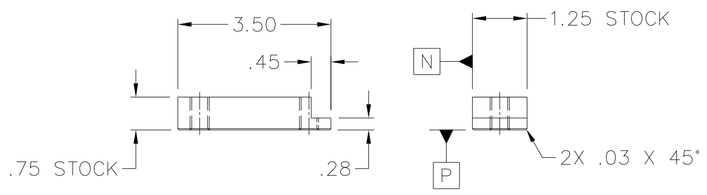

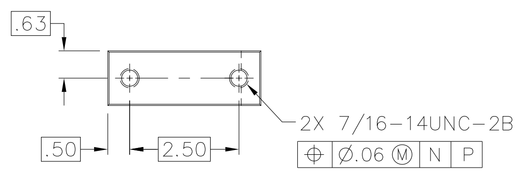

DETAIL OF PIECE 17
SCALE: 1/2

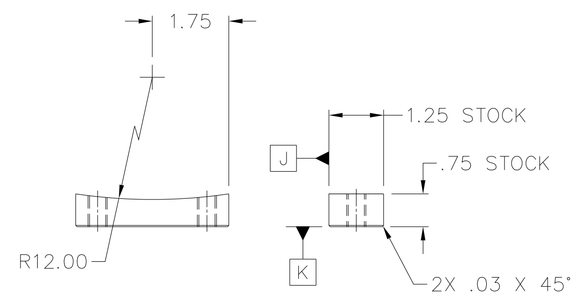

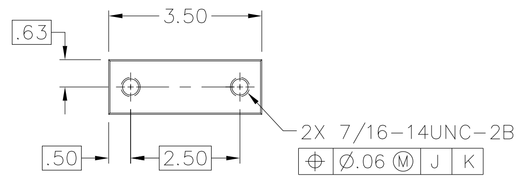

DETAIL OF PIECE 13
QTY 7 REQD
SCALE: 1/2

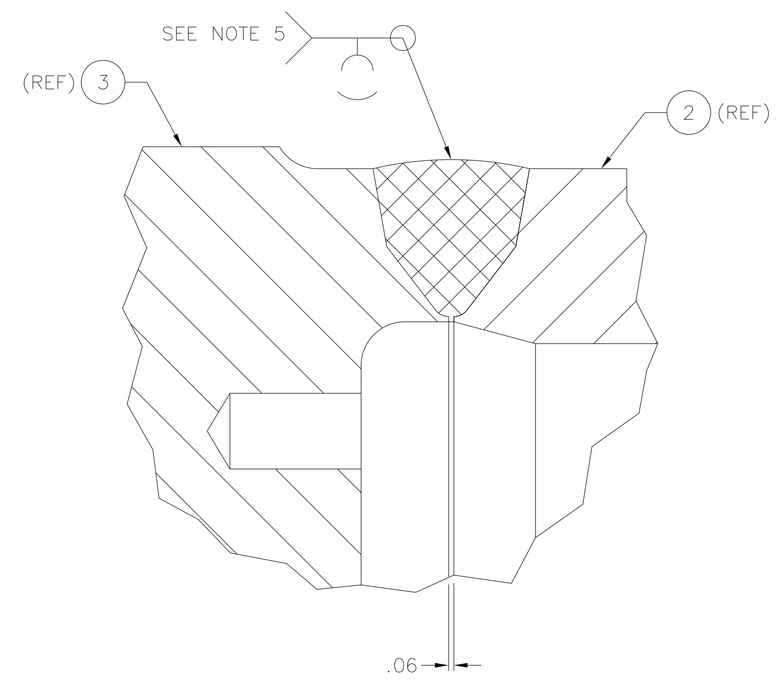

DETAIL G
SCALE: 1/1

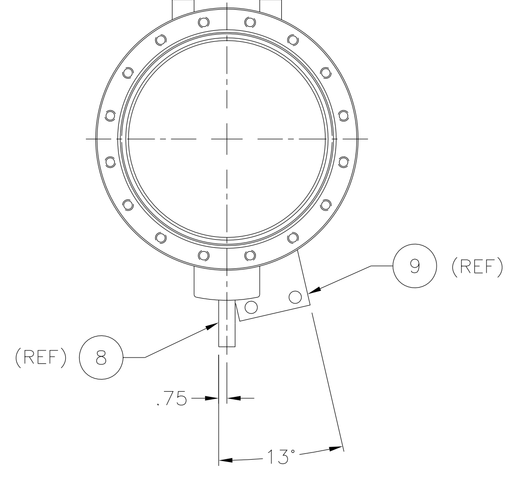

SECTION J-J

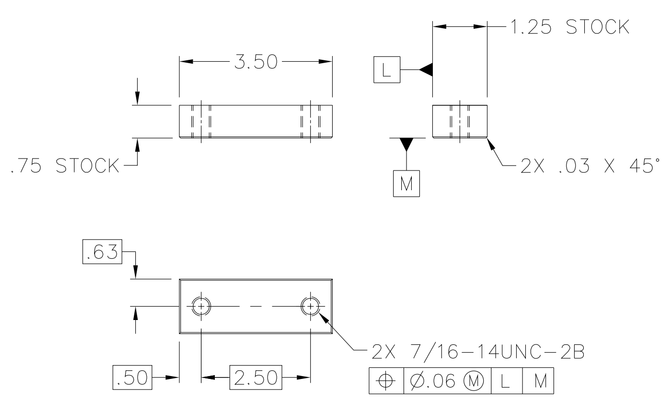

DETAIL OF PIECE 16
SCALE: 1/2

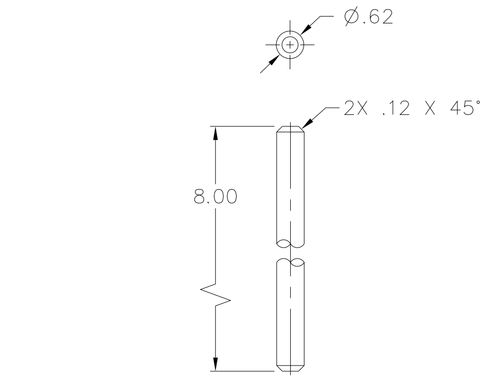

DETAIL OF PIECE 12
SCALE: 1/2

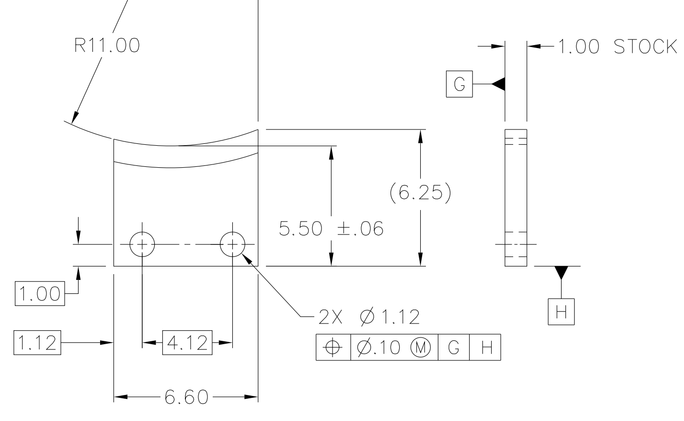

DETAIL OF PIECE 9
SCALE: 1/4

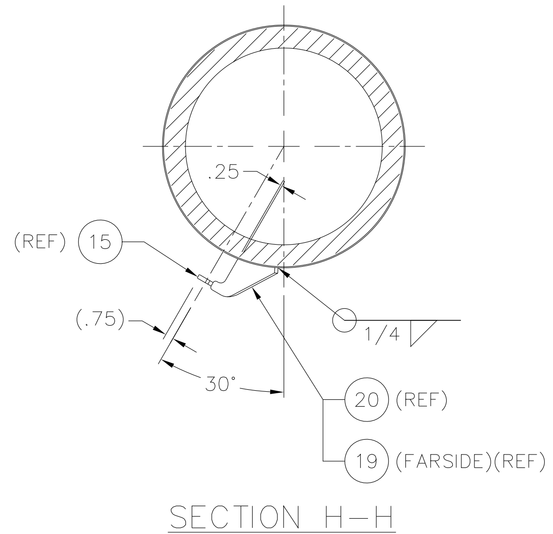

SECTION H-H

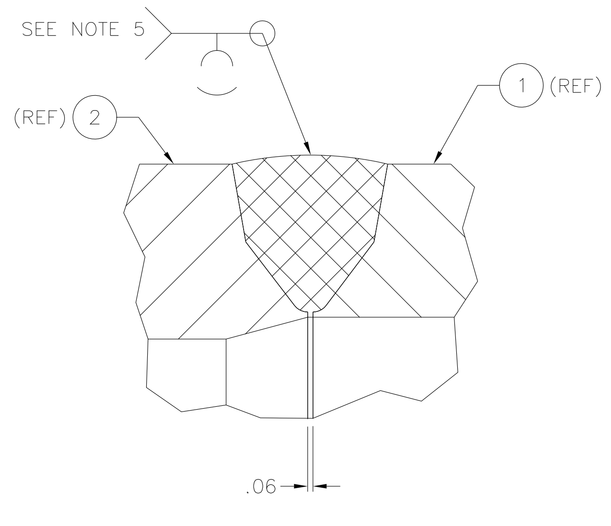

DETAIL F
SCALE: 1/1

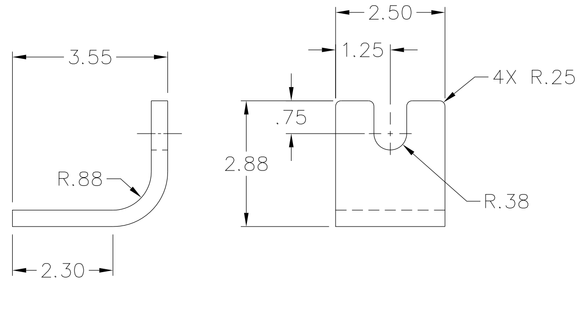

DETAIL OF PIECE 15
SCALE: 1/2

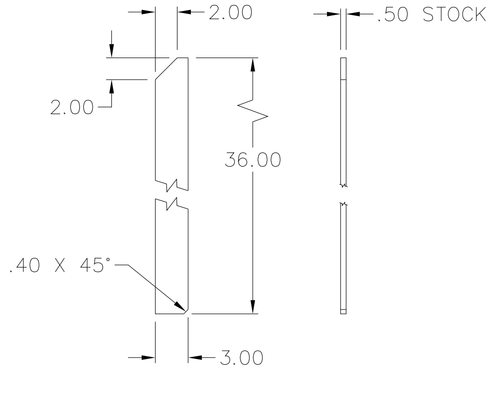

DETAIL OF PIECE 11
QTY 2 REQD

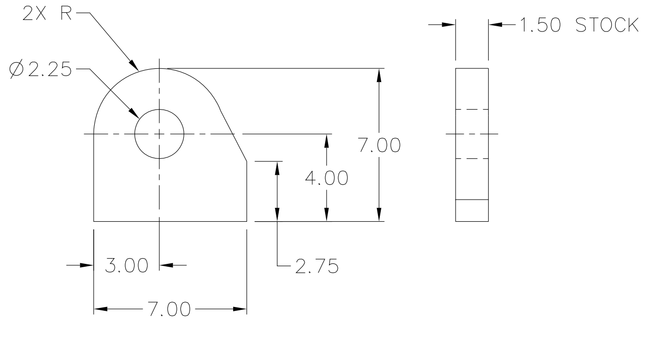

DETAIL OF PIECE 8
QTY 2 REQD
SCALE: 1/4

8287507

SIZE	CAGE CODE	NAVSEA DWG. NO.	REV
F	53711	8287507	–
SCALE 1/8	UNIT WT ———	SHEET 4	

NSWC 4120/1A (REV. 03-92)

NSWC 4120/7A (REV. 03-92)

NOTICE OF CONFIGURATION CONTROL

THIS DRAWING DEFINES AN ITEM OF UNDERWAY REPLENISHMENT (UNREP) STANDARD HARDWARE. NO REVISION TO THIS DRAWING OR THE HARDWARE REPRESENTED BY IT IS AUTHORIZED WITHOUT THE WRITTEN APPROVAL OF THE NAVAL SEA SYSTEMS COMMAND.

DISTRIBUTION STATEMENT C: DISTRIBUTION AUTHORIZED TO U.S. GOVERNMENT AGENCIES AND THEIR CONTRACTORS; OTHER REQUESTS MUST BE REFERRED TO COMNAVSEA OR THE COGNIZANT NAVSEA CODE.

WARNING: THIS DOCUMENT CONTAINS TECHNICAL DATA WHOSE EXPORT IS RESTRICTED BY THE ARMS EXPORT CONTROL ACT (TITLE 22, U.S.C. 2751 ET SEQ.) OR EXECUTIVE ORDER 12470. VIOLATIONS OF THESE EXPORT LAWS ARE SUBJECT TO SEVERE CRIMINAL PENALTIES.

DESTRUCTION NOTICE: DESTROY BY ANY METHOD THAT WILL PREVENT DISCLOSURE OF CONTENTS OR RECONSTRUCTION OF THE DOCUMENT.

APPLICATION	
NEXT ASSY	USED ON
8287507	8287500

MATERIAL:
STEEL
PER ASTM A36
OR
LOW ALLOY HIGH STRENGTH STEEL
PER ASTM A572
OR ASTM A588
GRADE B

UNLESS OTHERWISE SPECIFIED:
ALL DIMENSIONS ARE IN INCHES
TOLERANCES: ANGLES±
FRACTIONS±
DECIMALS
.XX± .02
.XXX± .005
BEND RADII
FILLETS & ROUNDS
SURFACE FINISH 250
INTERPRET DRAWING IN ACCORDANCE WITH STANDARDS PRESCRIBED IN ASME Y14.100
BREAK ALL SHARP EDGES

DO NOT SCALE THIS DRAWING

NAVAL SURFACE WARFARE CENTER
PORT HUENEME DIVISION
4363 MISSILE WAY
PORT HUENEME, CA 93043-4307

	PREPARED	AMSEC	06-07
	CHECKED		
	TECH LEAD		
	BR HD		

ACCEPTED BY NAVSEA	(SIGNATURE DOES NOT DENOTE APPROVAL)
APPROVED FOR NAVSEA	(SIGN ONLY IF ENDORSING HAS BEEN "PASSED" BY MANUFACTURE AND TEST)

DEPARTMENT OF THE NAVY
NAVAL SEA SYSTEMS COMMAND
WASHINGTON,D.C. 20376-5160

HEAVY UNREP-NAVY STANDARD
RAM TENSIONER

BEDPLATE

SIZE	CAGE CODE	NAVSEA DWG. NO.	REV
F	53711	8287508	—

SCALE 1/8 | UNIT WT 1497.2 LBS | SHEET 1 OF 1

PARTS LIST

PART OR IDENTIFYING NO.	QTY REQD	CODE IDENT NO.	DRAWING OR SPECIFICATION	NOMENCLATURE OR DESCRIPTION	REMARKS

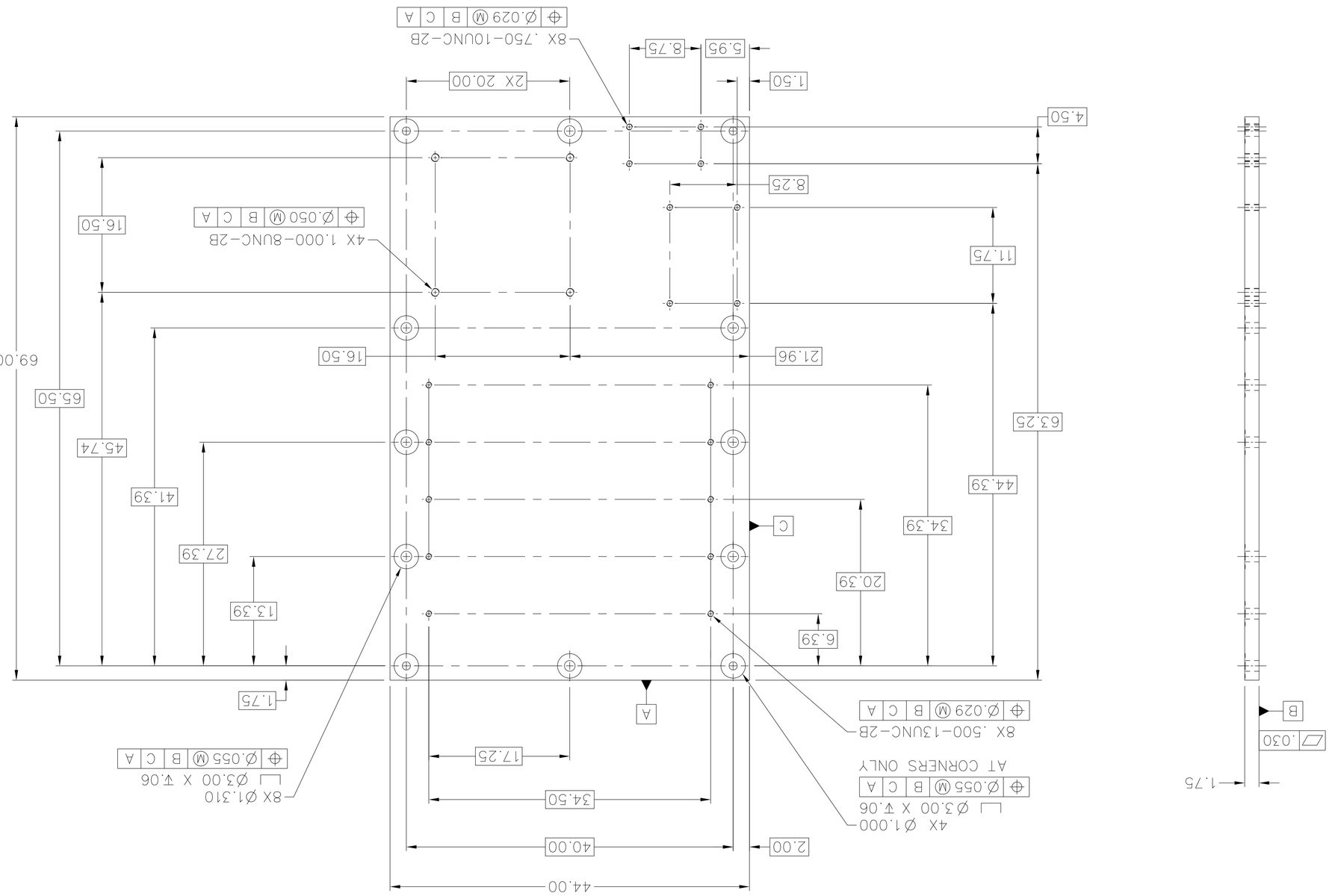

REVISIONS			
ZONE	LTR	DESCRIPTION	DATE	APPROVED

NOTES:

1. WELDING REQUIREMENTS:

1.1 FABRICATION, WELDING, STRESS RELIEF AND INSPECTION SHALL BE IN ACCORDANCE WITH NAVSEA S9074-AR-GIB-010/278 AND T9074-AS-GIB-010/271, CLASS M-2, CATEGORY A. ALL WELDS ON THIS DRAWING ARE CLASSIFIED AS CATEGORY A AND REQUIRE EITHER MAGNETIC PARTICLE (MT) OR ULTRASONIC (UT) INSPECTION.

1.2 WELD INSPECTION STARTS AT ROOT WELD IAW TECHNICAL PUBLICATIONS LISTED IN 1.1 ABOVE.

1.3 UNLESS OTHERWISE SPECIFIED ON THIS DRAWING, ALL DIMENSIONS AND TOLERANCES REFER TO FINISHED PRODUCT.

2. DIMENSIONS PROVIDED IN REMARKS COLUMN OF PARTS LIST ARE REFERENCE ONLY UNLESS THERE IS NO DETAILED VIEW WHICH SPECIFIES REQUIRED DIMENSIONS.

3. WELDMENT MAY BE STRAIGHTENED IF REQUIRED TO MEET DIMENSIONAL REQUIREMENTS ON THE FACE OF DRAWING.

4. STOCK SIZE IN REMARKS COLUMN OF PARTS LIST IS NOMINAL WITHOUT MANUFACTURING ALLOWANCE.

REVISIONS

ZONE	LTR	DESCRIPTION	DATE	APPROVED

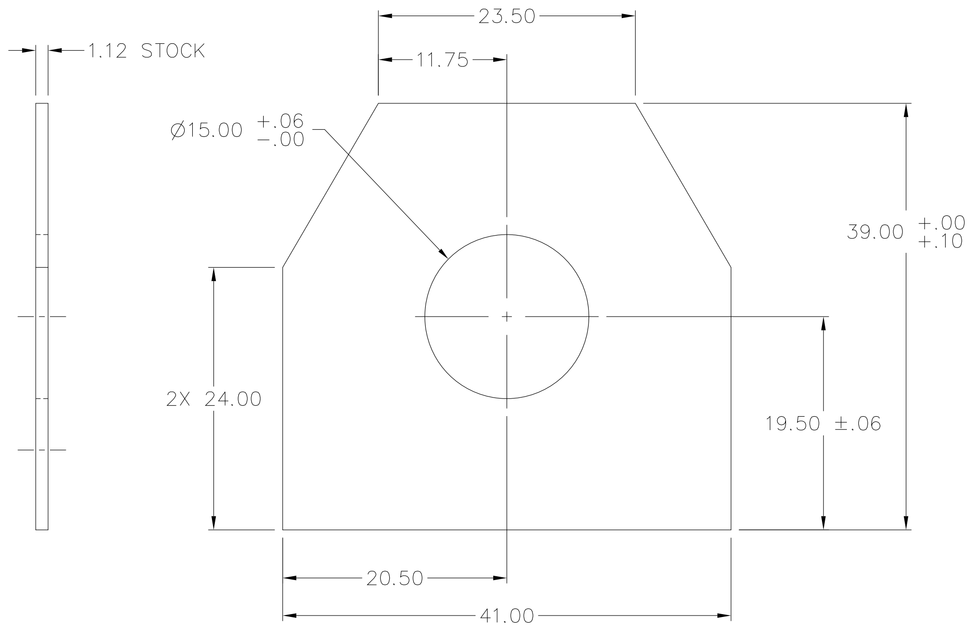

DETAIL OF PIECE 4

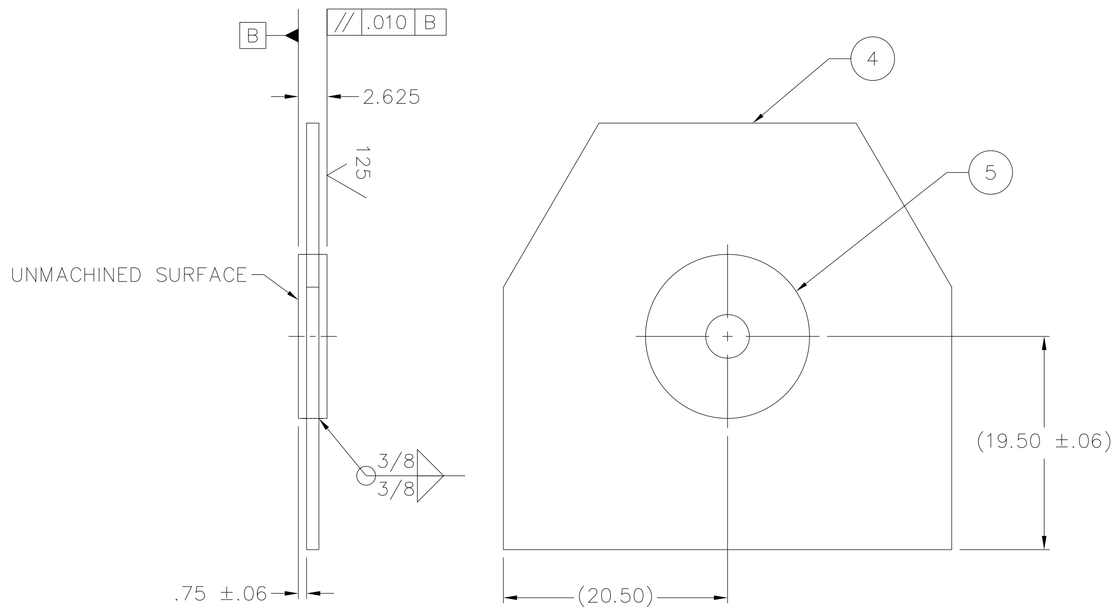

OUTER PLATE DASH NO-1

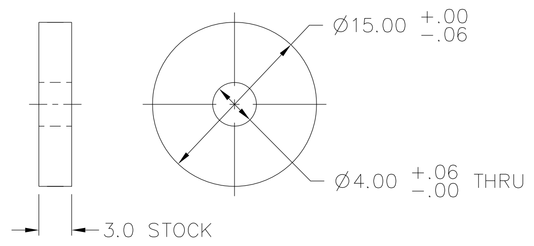

DETAIL OF PIECE 5

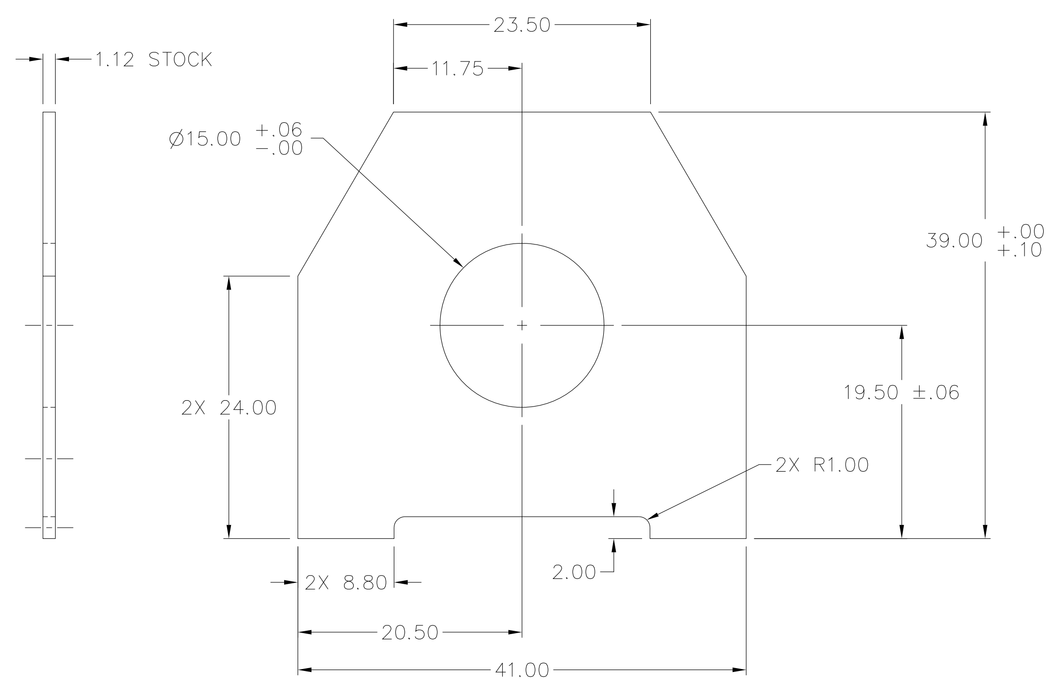

DETAIL OF PIECE 3

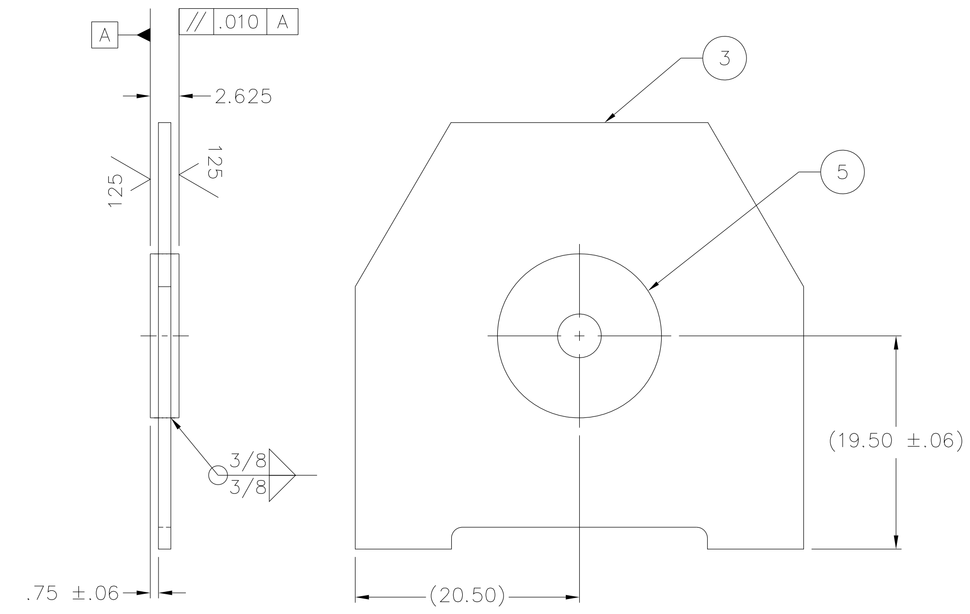

INNER PLATE DASH NO-2

TABLE A		
DASH NO	DESCRIPTION	REMARKS
-1	OUTER PLATE	534.8 LBS
-2	INNER PLATE	520.0 LBS

PART OR IDENTIFYING NO.	DASH NO. / QTY REQD	CODE IDENT NO.	DRAWING OR SPECIFICATION	NOMENCLATURE OR DESCRIPTION	REMARKS
5	1 / 1	–	–	PLATE	15 DIA X 3
4	1 /	–	–	PLATE	1-1/8 X 39 X 41
3	/ 1	–	–	PLATE	1-1/8 X 39 X 41
	-1 / -2	–	–		SEE TABLE A

NOTICE OF CONFIGURATION CONTROL

THIS DRAWING DEFINES AN ITEM OF UNDERWAY REPLENISHMENT (UNREP) STANDARD HARDWARE. NO REVISION TO THIS DRAWING OR THE HARDWARE REPRESENTED BY IT IS AUTHORIZED WITHOUT THE WRITTEN APPROVAL OF THE NAVAL SEA SYSTEMS COMMAND.

DISTRIBUTION STATEMENT C: DISTRIBUTION AUTHORIZED TO U.S. GOVERNMENT AGENCIES AND THEIR CONTRACTORS; OTHER REQUESTS MUST BE REFERRED TO COMNAVSEA OR THE COGNIZANT NAVSEA CODE.

WARNING: THIS DOCUMENT CONTAINS TECHNICAL DATA WHOSE EXPORT IS RESTRICTED BY THE ARMS EXPORT CONTROL ACT (TITLE 22, U.S.C. SEC. 2751 ET SEQ.) OR EXECUTIVE ORDER 12470. VIOLATIONS OF THESE EXPORT LAWS ARE SUBJECT TO SEVERE CRIMINAL PENALTIES.

DESTRUCTION NOTICE: DESTROY BY ANY METHOD THAT WILL PREVENT DISCLOSURE OF CONTENTS OR RECONSTRUCTION OF THE DOCUMENT.

APPLICATION	
NEXT ASSY	USED ON
8287507	8287500

MATERIAL:
PC 3 THRU 5
LOW ALLOY HIGH STRENGTH STEEL
PER ASTM A572
OR ASTM A588
GRADE B

UNLESS OTHERWISE SPECIFIED:
ALL DIMENSIONS ARE IN INCHES
TOLERANCES: ANGLES±
FRACTIONS±
DECIMALS
.XX± .02
.XXX± .005
BEND RADII
FILLETS & ROUNDS .250
SURFACE FINISH
BREAK ALL SHARP EDGES
INTERPRET DRAWING IN ACCORDANCE WITH STANDARDS PRESCRIBED IN ASME Y14.100
DO NOT SCALE THIS DRAWING

PORT HUENEME DIVISION
NAVAL SURFACE WARFARE CENTER
4363 MISSILE WAY
PORT HUENEME, CA 93043-4307

PREPARED	AMSEC	06-07
CHECKED		
TECH LEAD		
BR HD		
ACCEPTED BY NAVSEA	(SIGNATURE DOES NOT DENOTE APPROVAL)	
APPROVED FOR NAVSEA	(SIGN ONLY IF ENGINEERING HAS BEEN "PROVED" BY MANUFACTURE AND TEST)	

DEPARTMENT OF THE NAVY
NAVAL SEA SYSTEMS COMMAND
WASHINGTON,D.C. 20376-5160

HEAVY UNREP-NAVY STANDARD
RAM TENSIONER

LOWER SHEAVE PLATE

SIZE	CAGE CODE	NAVSEA DWG. NO.	REV
F	53711	8287509	–

SCALE 1/8 | UNIT WT | TABLE A | SHEET 1 OF 1

8287509

NSWC 4120/1A (REV. 03-92)

NSWC 4120/7A (REV. 03-92)

NOTICE OF CONFIGURATION CONTROL

THIS DRAWING DEFINES AN ITEM OF UNDERWAY REPLENISHMENT (UNREP) STANDARD HARDWARE. NO REVISION TO THIS DRAWING OR THE HARDWARE REPRESENTED BY IT IS AUTHORIZED WITHOUT THE WRITTEN APPROVAL OF THE NAVAL SEA SYSTEMS COMMAND.

DISTRIBUTION STATEMENT C: DISTRIBUTION AUTHORIZED TO U.S. GOVERNMENT AGENCIES AND THEIR CONTRACTORS; OTHER REQUESTS MUST BE REFERRED TO COMNAVSEA OR THE COGNIZANT NAVSEA CODE.

WARNING: THIS DOCUMENT CONTAINS TECHNICAL DATA WHOSE EXPORT IS RESTRICTED BY THE ARMS EXPORT CONTROL ACT (TITLE 22, U.S.C. SEC. 2751 ET SEQ.) OR EXECUTIVE ORDER 12470. VIOLATIONS OF THESE EXPORT LAWS ARE SUBJECT TO SEVERE CRIMINAL PENALTIES.

DESTRUCTION NOTICE: DESTROY BY ANY METHOD THAT WILL PREVENT DISCLOSURE OF CONTENTS OR RECONSTRUCTION OF THE DOCUMENT.

REVISION STATUS OF SHEETS						
SHEET NUMBER	1	2	3	4	5	6
	—	—				

APPLICATION	
NEXT ASSY	USED ON
8287507	8287500

MATERIAL: STEEL ASTM A516, GR 70

UNLESS OTHERWISE SPECIFIED:
ALL DIMENSIONS ARE IN INCHES
TOLERANCES: ANGLES± .5°
FRACTIONS±
DECIMALS
.XX± .02
.XXX± .005
BEND RADII
FILLETS & ROUNDS
SURFACE FINISH 250√
BREAK ALL SHARP EDGES
INTERPRET DRAWING IN ACCORDANCE WITH STANDARDS PRESCRIBED IN ASME Y14.100
DO NOT SCALE THIS DRAWING

PREPARED	AMSEC	06-07	
CHECKED			
TECH LEAD			
BR HD			
ACCEPTED BY NAVSEA	(SIGNATURE DOES NOT DENOTE APPROVAL)		
APPROVED FOR NAVSEA	(SIGN ONLY IF ENDORSING HAS BEEN "INSPECTED" BY NAVREPSHIPDET)		

PORT HUENEME DIVISION
NAVAL SURFACE WARFARE CENTER
4363 MISSILE WAY
PORT HUENEME, CA 93043-4307

DEPARTMENT OF THE NAVY
NAVAL SEA SYSTEMS COMMAND
WASHINGTON,D.C. 20376-5160

HEAVY UNREP–NAVY STANDARD
RAM TENSIONER

FLOW CONTROL VALVE BLOCK

SIZE	CAGE CODE	NAVSEA DWG. NO.	REV
F	53711	8287510	—

SCALE 1/4 | UNIT WT 1925 LBS | SHEET 1 OF 2

PARTS LIST

PART OR IDENTIFYING NO.	QTY REQD	CODE IDENT NO.	DRAWING OR SPECIFICATION	NOMENCLATURE OR DESCRIPTION	REMARKS

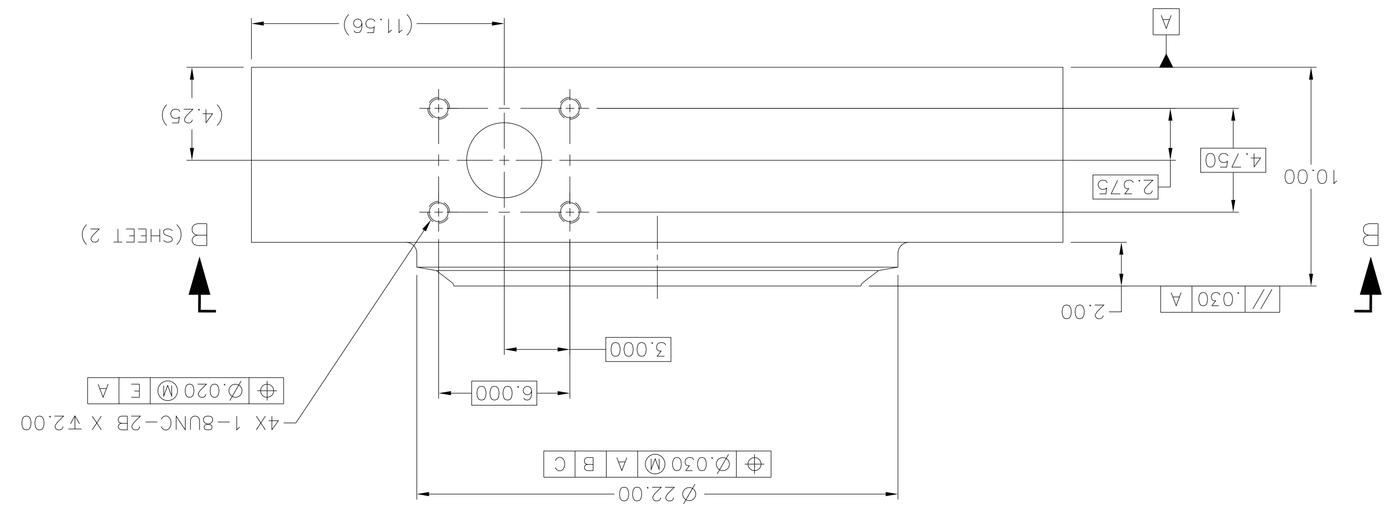

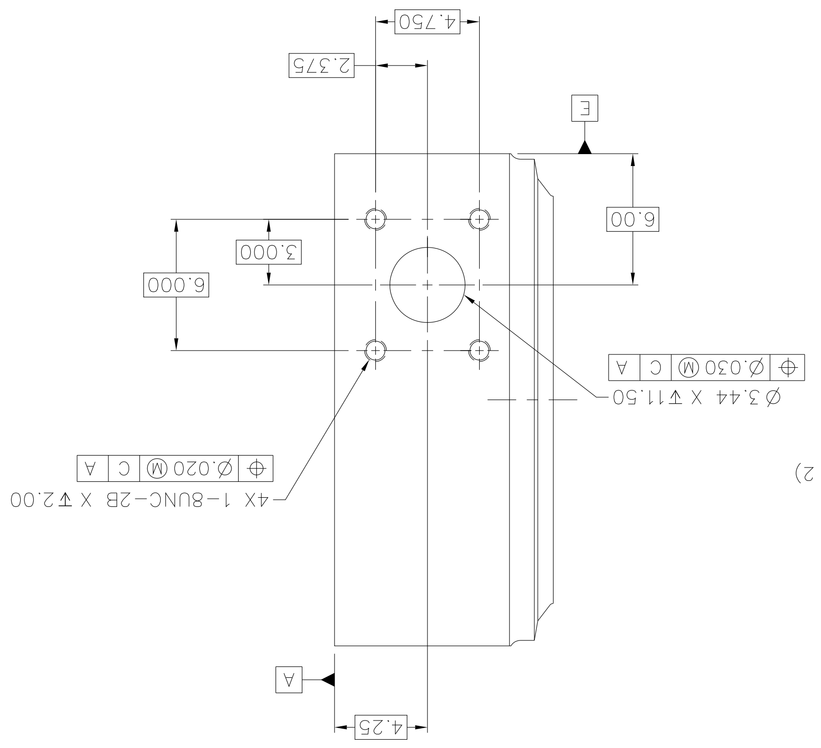

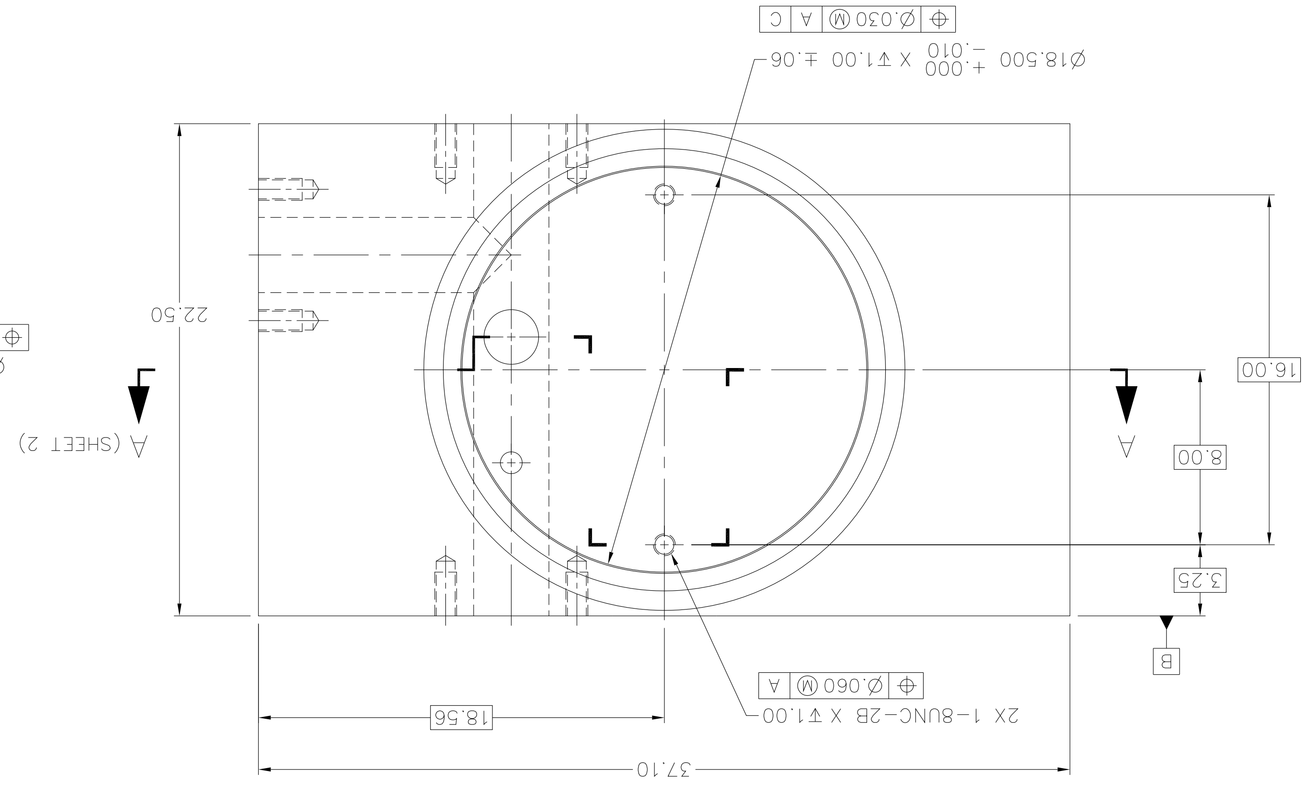

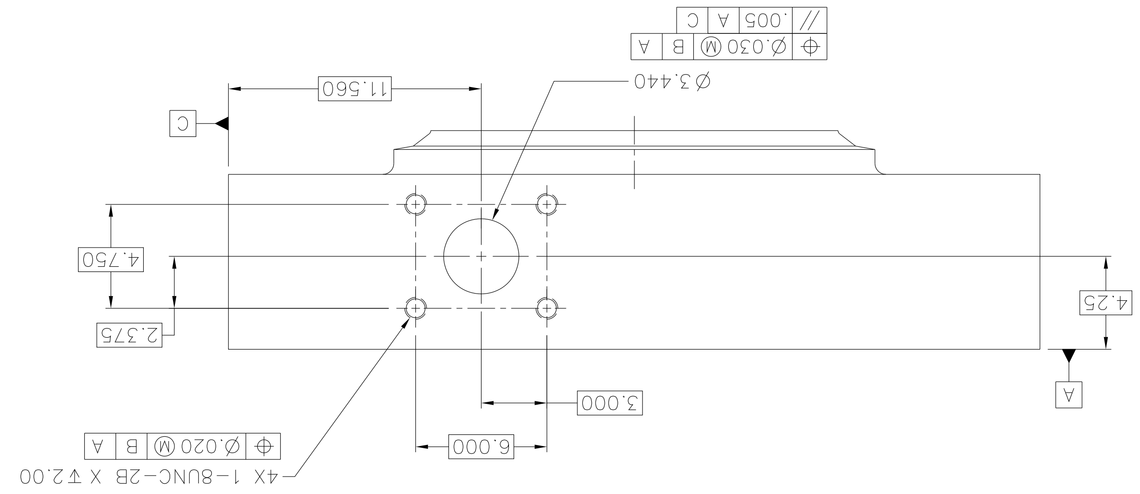

REVISIONS			
ZONE	LTR	DESCRIPTION	DATE	APPROVED

REVISIONS				
ZONE	LTR	DESCRIPTION	DATE	APPROVED

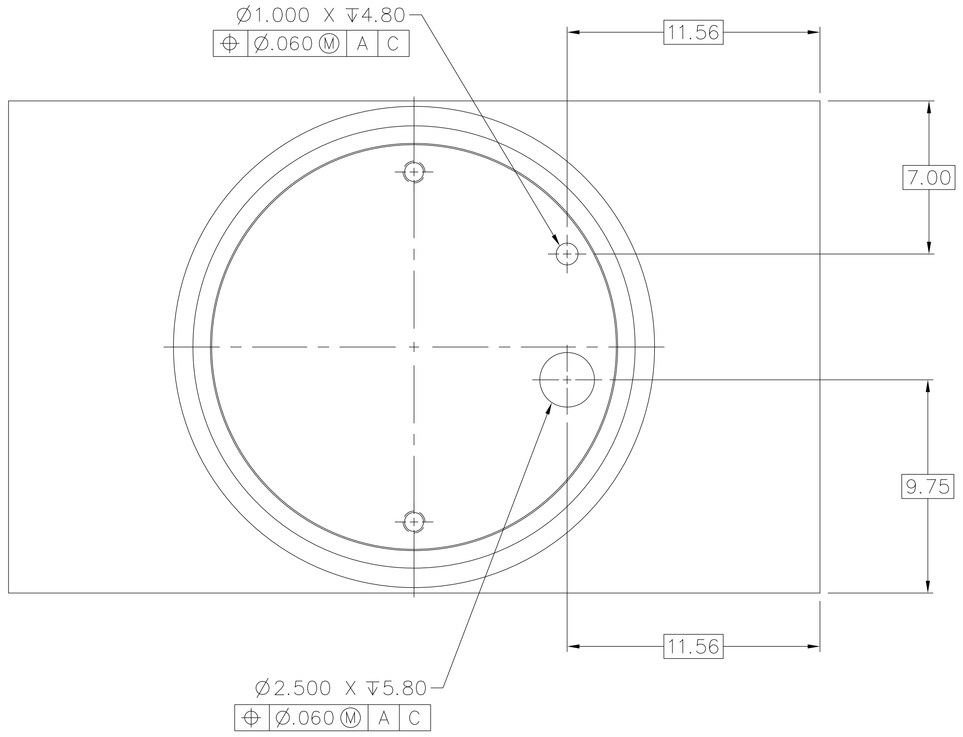

VIEW B–B

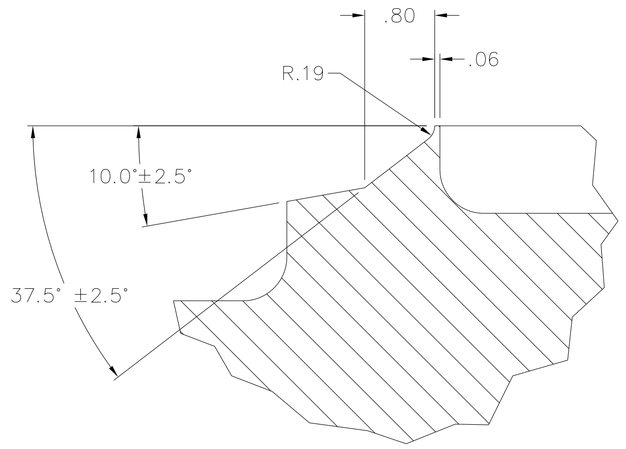

DETAIL C
SCALE: 1/1

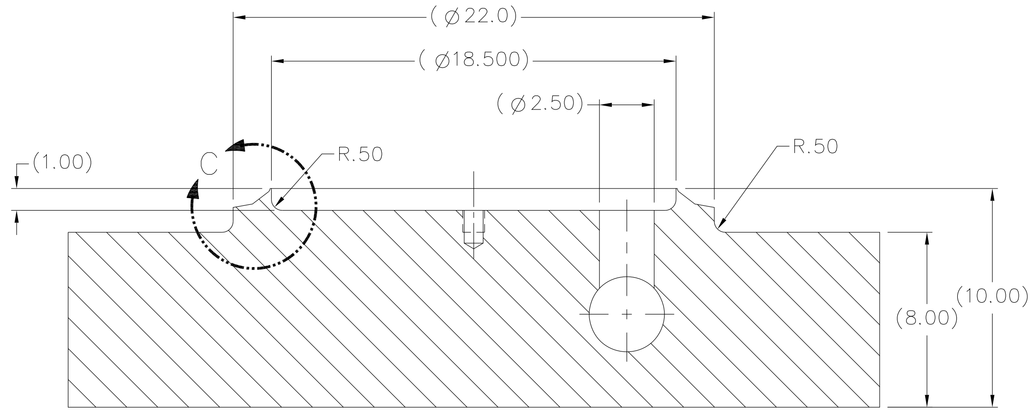

SECTION A–A

8287510

SIZE	CAGE CODE	NAVSEA DWG. NO.	REV
F	53711	8287510	–
SCALE 1/4	UNIT WT ———	SHEET 2	

NSWC 4120/1A (REV. 03-92)

NSNC 4120/7A (REV. 03-92)

NOTICE OF CONFIGURATION CONTROL

THIS DRAWING DEFINES AN ITEM OF UNDERWAY REPLENISHMENT (UNREP) STANDARD HARDWARE. NO REVISION TO THIS DRAWING OR THE HARDWARE REPRESENTED BY IT IS AUTHORIZED WITHOUT THE WRITTEN APPROVAL OF THE NAVAL SEA SYSTEMS COMMAND.

DISTRIBUTION STATEMENT C: DISTRIBUTION AUTHORIZED TO U.S. GOVERNMENT AGENCIES AND THEIR CONTRACTORS; OTHER REQUESTS MUST BE REFERRED TO COMNAVSEA OR THE COGNIZANT NAVSEA CODE.

WARNING: THIS DOCUMENT CONTAINS TECHNICAL DATA WHOSE EXPORT IS RESTRICTED BY THE ARMS EXPORT CONTROL ACT (TITLE 22, U.S.C. 2751 ET SEQ.) OR EXECUTIVE ORDER 12470. VIOLATIONS OF THESE EXPORT LAWS ARE SUBJECT TO SEVERE CRIMINAL PENALTIES.

DESTRUCTION NOTICE: DESTROY BY ANY METHOD THAT WILL PREVENT DISCLOSURE OF CONTENTS OR RECONSTRUCTION OF THE DOCUMENT.

APPLICATION	
NEXT ASSY	USED ON
8287507	8287500

MATERIAL: SEAMLESS STEEL PIPE PER ASTM A106 GRADE C

UNLESS OTHERWISE SPECIFIED: ALL DIMENSIONS ARE IN INCHES TOLERANCES: ANGLES± .5° FRACTIONS± DECIMALS .XX± .02 .XXX± .005 BEND RADII FILLETS & ROUNDS SURFACE FINISH 250 INTERPRET DRAWING IN ACCORDANCE WITH STANDARDS PRESCRIBED IN ASME Y14.100 DO NOT SCALE THIS DRAWING

NAVAL SURFACE WARFARE CENTER PORT HUENEME DIVISION 4363 MISSILE WAY PORT HUENEME, CA 93043-4307

PREPARED	AMSEC	06-07
CHECKED		
TECH LEAD		
BR HD		
ACCEPTED BY NAVSEA	(SIGNATURE DOES NOT SIGNIFY APPROVAL)	
APPROVED FOR NAVSEA	(SIGN ONLY IF ENGINEERING HAS BEEN "PROOF" BY MANUFACTURE AND TEST)	

DEPARTMENT OF THE NAVY
NAVAL SEA SYSTEMS COMMAND
WASHINGTON,D.C. 20376-5160

HEAVY UNREP-NAVY STANDARD
RAM TENSIONER
LOWER RAM CYLINDER

SIZE	CAGE CODE	NAVSEA DWG. NO.	REV
F	53711	8287511	—

SCALE 1/4 | UNIT WT 6028.4 LBS | SHEET 1 OF 1

PARTS LIST

PART OR IDENTIFYING NO.	QTY REQD	CODE IDENT NO.	DRAWING OR SPECIFICATION	NOMENCLATURE OR DESCRIPTION	REMARKS

8287511

SECTION A–A

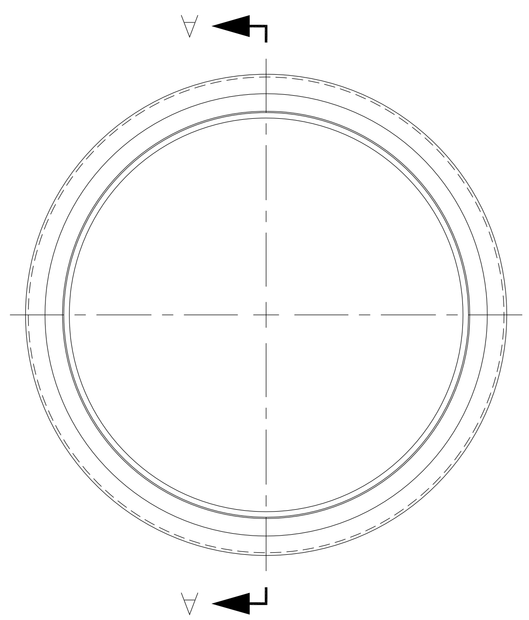

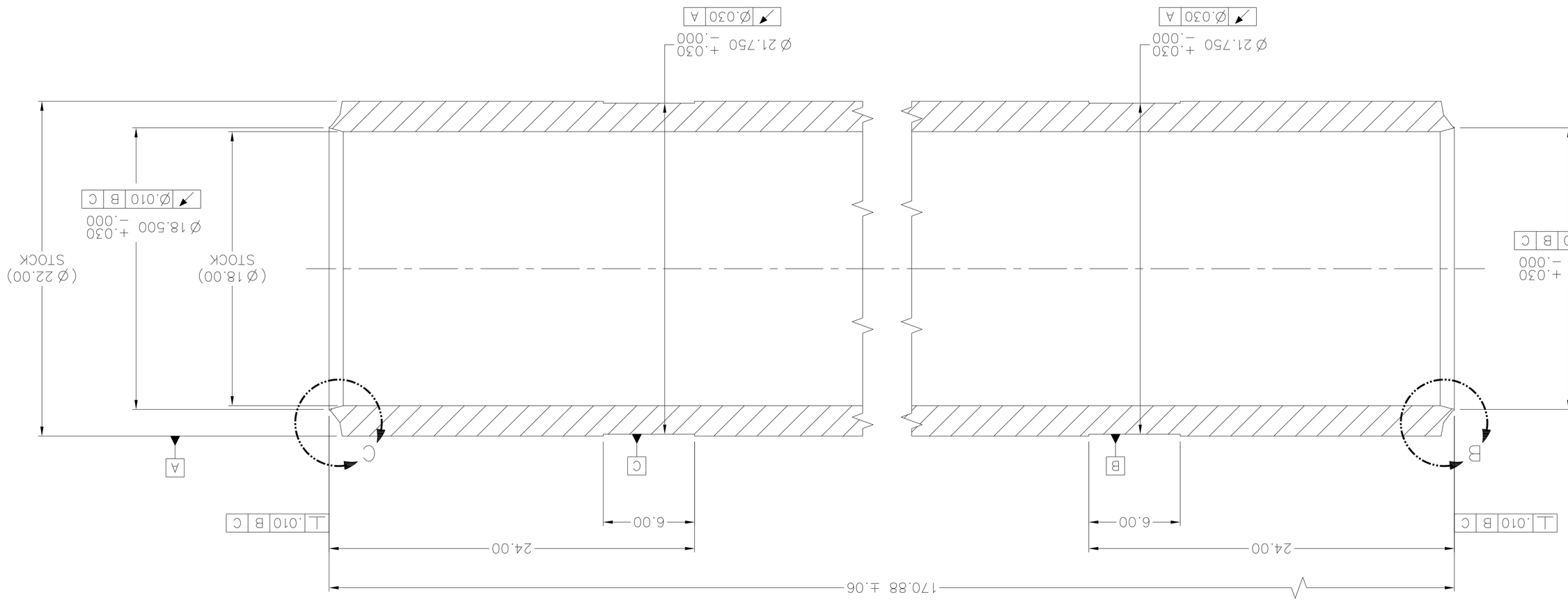

DETAIL B
SCALE: 1/1

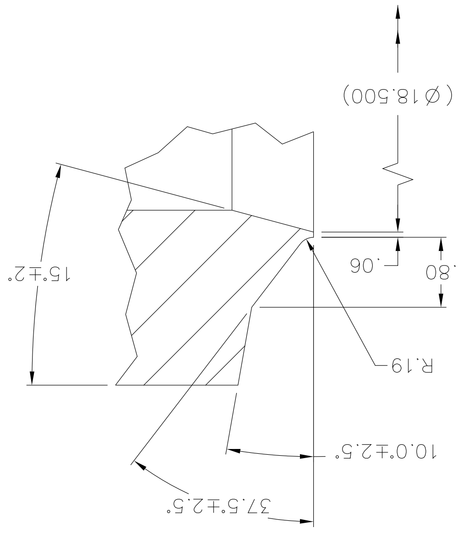

DETAIL C
SCALE: 1/1

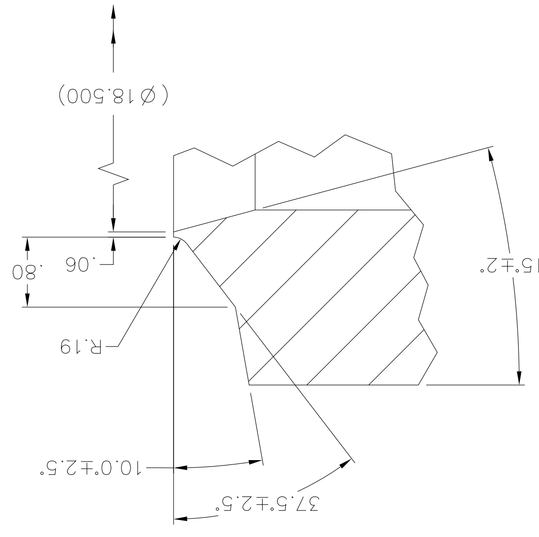

NOTES:

1. THE SPECIFICATION LISTED IN THE MATERIAL BLOCK CAN BE FOUND IN SECTION II OF THE ASME BOILER AND PRESSURE VESSEL CODE.

REVISIONS			
ZONE	LTR	DESCRIPTION	DATE	APPROVED

NSNC 4120/7A (REV. 03-92)

NOTICE OF CONFIGURATION CONTROL

THIS DRAWING DEFINES AN ITEM OF UNDERWAY REPLENISHMENT (UNREP) STANDARD HARDWARE. NO REVISION TO THIS DRAWING OR THE HARDWARE REPRESENTED BY IT IS AUTHORIZED WITHOUT THE WRITTEN APPROVAL OF THE NAVAL SEA SYSTEMS COMMAND.

DISTRIBUTION STATEMENT C: DISTRIBUTION AUTHORIZED TO U.S. GOVERNMENT AGENCIES AND THEIR CONTRACTORS; OTHER REQUESTS MUST BE REFERRED TO COMNAVSEA OR THE COGNIZANT NAVSEA CODE.

WARNING: THIS DOCUMENT CONTAINS TECHNICAL DATA WHOSE EXPORT IS RESTRICTED BY THE ARMS EXPORT CONTROL ACT (TITLE 22, U.S.C. 2751 ET SEQ.) OR EXECUTIVE ORDER 12470. VIOLATIONS OF THESE EXPORT LAWS ARE SUBJECT TO SEVERE CRIMINAL PENALTIES.

DESTRUCTION NOTICE: DESTROY BY ANY METHOD THAT WILL PREVENT DISCLOSURE OF CONTENTS OR RECONSTRUCTION OF THE DOCUMENT.

REVISION STATUS OF SHEETS

SHEET NUMBER	1	2	3	4	5	6
	—	—				

APPLICATION	
NEXT ASSY	USED ON
8287507	8287500

MATERIAL: SEAMLESS STEEL PIPE PER ASTM A106 GRADE C

UNLESS OTHERWISE SPECIFIED: ALL DIMENSIONS ARE IN INCHES
TOLERANCES: ANGLES ± .5°
FRACTIONS ±
DECIMALS
.XX ± .03
.XXX ± .010
BEND RADII
FILLETS & ROUNDS 250
SURFACE FINISH √
BREAK ALL SHARP EDGES

INTERPRET DRAWING IN ACCORDANCE WITH STANDARDS PRESCRIBED IN ASME Y14.100

DO NOT SCALE THIS DRAWING

	PREPARED	AMSEC	06-07
	CHECKED		
	TECH LEAD		
	BR HD		
	ACCEPTED BY NAVSEA	(SIGNATURE DOES NOT DENOTE APPROVAL)	
	APPROVED FOR NAVSEA	(SIGN ONLY IF ENDORSING HAS BEEN "PACKED" BY MANUFACTURE AND TEST)	

PORT HUENEME DIVISION
NAVAL SURFACE WARFARE CENTER
4363 MISSILE WAY
PORT HUENEME, CA 93043-4307

DEPARTMENT OF THE NAVY
NAVAL SEA SYSTEMS COMMAND
WASHINGTON,D.C. 20376-5160

HEAVY UNREP-NAVY STANDARD
RAM TENSIONER

UPPER RAM CYLINDER

SIZE	CAGE CODE	NAVSEA DWG. NO.	REV
F	53711	8287512	—

SCALE 1/4 | UNIT WT 2382.8 LBS | SHEET 1 OF 2

PARTS LIST

PART OR IDENTIFYING NO.	QTY REQD	DRAWING OR SPECIFICATION CODE IDENT NO.	NOMENCLATURE OR DESCRIPTION	REMARKS

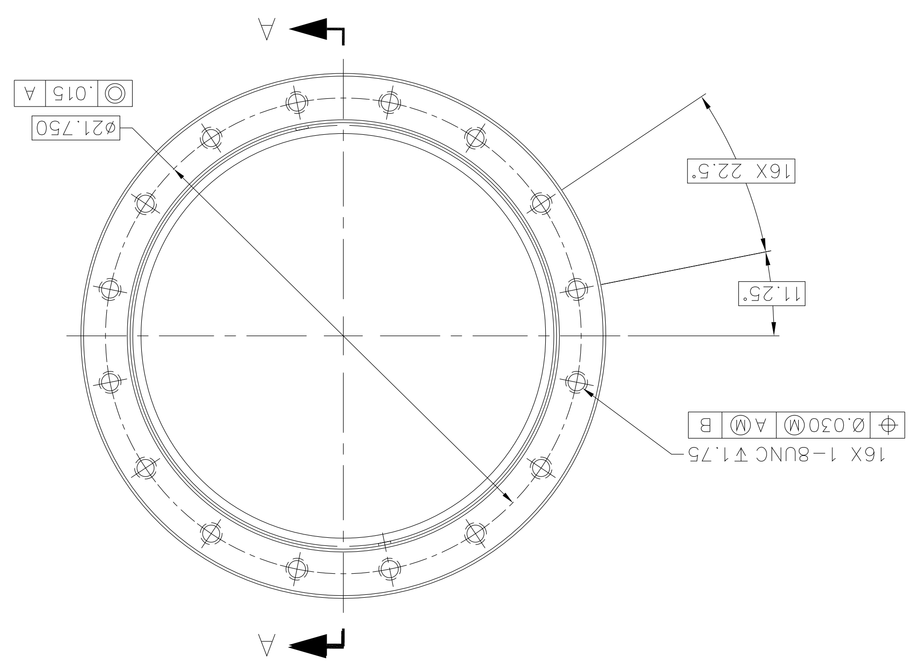

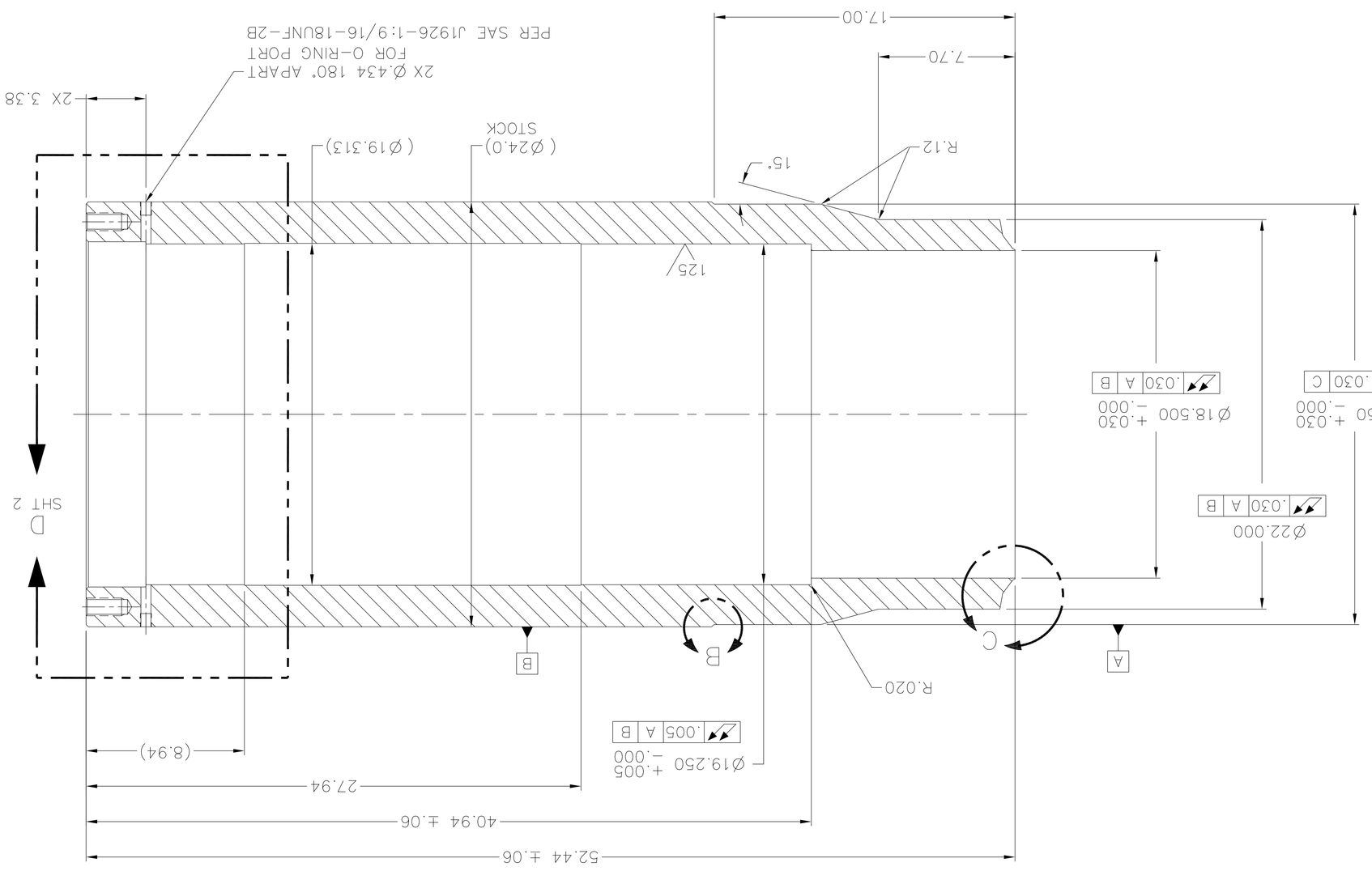

SECTION A-A

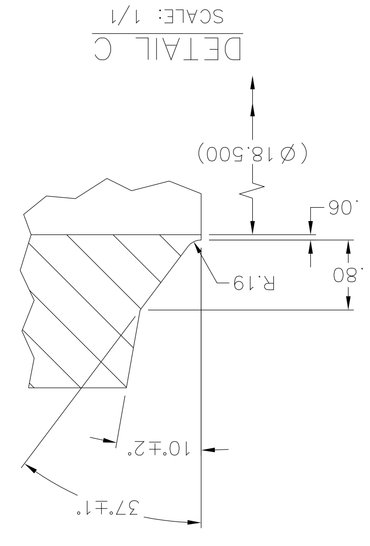

DETAIL C
SCALE: 1/1

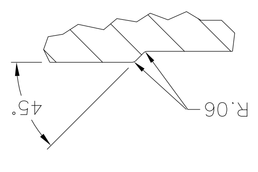

DETAIL B
SCALE: 1/1

NOTES:
1. THE SPECIFICATION LISTED IN THE MATERIAL BLOCK CAN BE FOUND IN SECTION II OF THE ASME BOILER AND PRESSURE VESSEL CODE.

REVISIONS			
ZONE	LTR	DESCRIPTION	DATE	APPROVED

8287512

NSNC 4120/1A (REV. 03-92)

SIZE	CAGE CODE	NAVSEA DWG. NO.	REV
F	53711	8287512	—

SCALE 1/2 UNIT WT ——— SHEET 2

8287512

DETAIL D

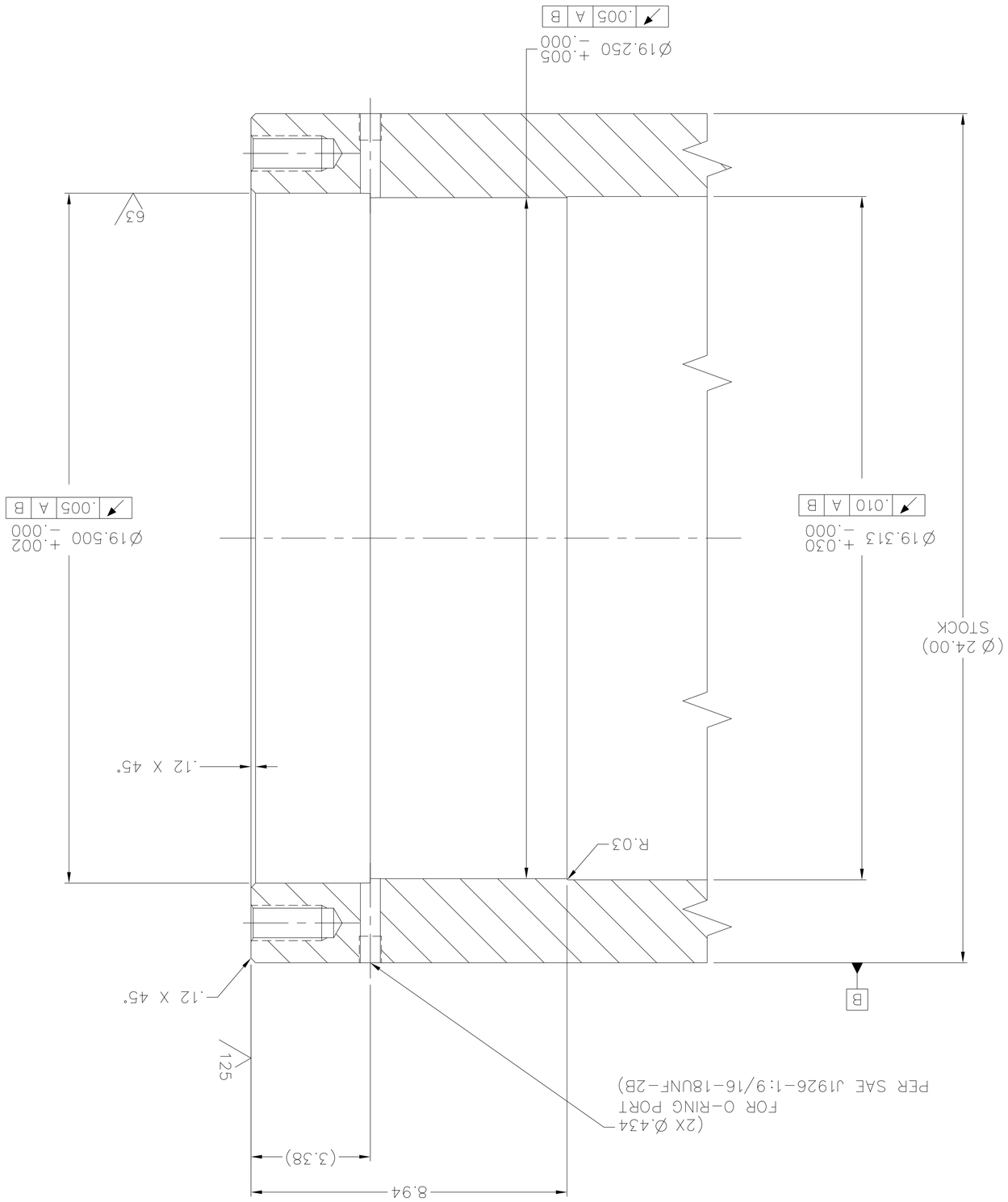

ZONE	LTR	DESCRIPTION	DATE	APPROVED

REVISIONS

REVISIONS				
ZONE	LTR	DESCRIPTION	DATE	APPROVED

NOTES:

1. WELDING REQUIREMENTS:

1.1 FABRICATION, WELDING, STRESS RELIEF AND INSPECTION SHALL BE IN ACCORDANCE WITH NAVSEA S9074-AR-GIB-010/278 AND T9074-AS-GIB-010/271, CLASS M-2, CATEGORY A.

1.2 WELD INSPECTION STARTS AT ROOT WELD IAW TECHNICAL PUBLICATIONS LISTED IN 1.1 ABOVE.

1.3 UNLESS OTHERWISE SPECIFIED ON THIS DRAWING, ALL DIMENSIONS AND TOLERANCES REFER TO FINISHED PRODUCT.

2. DIMENSIONS PROVIDED IN REMARKS COLUMN OF PARTS LIST ARE REFERENCE ONLY UNLESS THERE IS NO DETAILED VIEW WHICH SPECIFIES REQUIRED DIMENSIONS.

3. WELDMENT MAY BE STRAIGHTENED IF REQUIRED TO MEET DIMENSIONAL REQUIREMENTS ON THE FACE OF DRAWING.

4. STOCK SIZE IN REMARKS COLUMN OF PARTS LIST IS NOMINAL WITHOUT MANUFACTURING ALLOWANCE.

5. PAINT ALL SURFACES USING PROCEDURES AND MATERIALS SPECIFIED IN PC 9 USING SPECIAL PROCEDURE FOR RAM TENSIONERS.

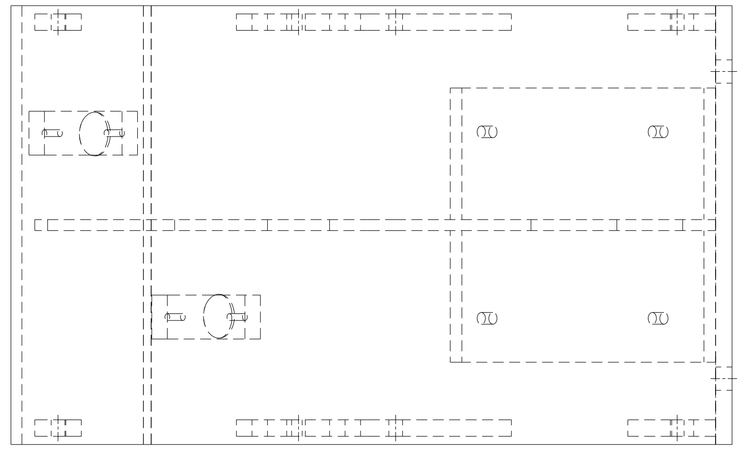

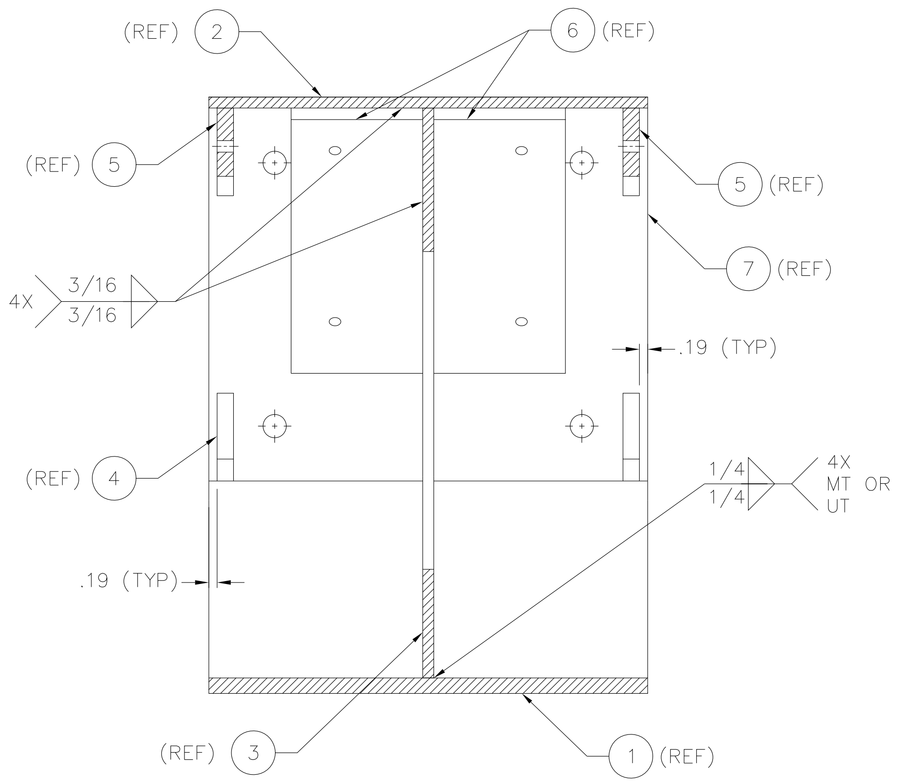

SECTION A-A

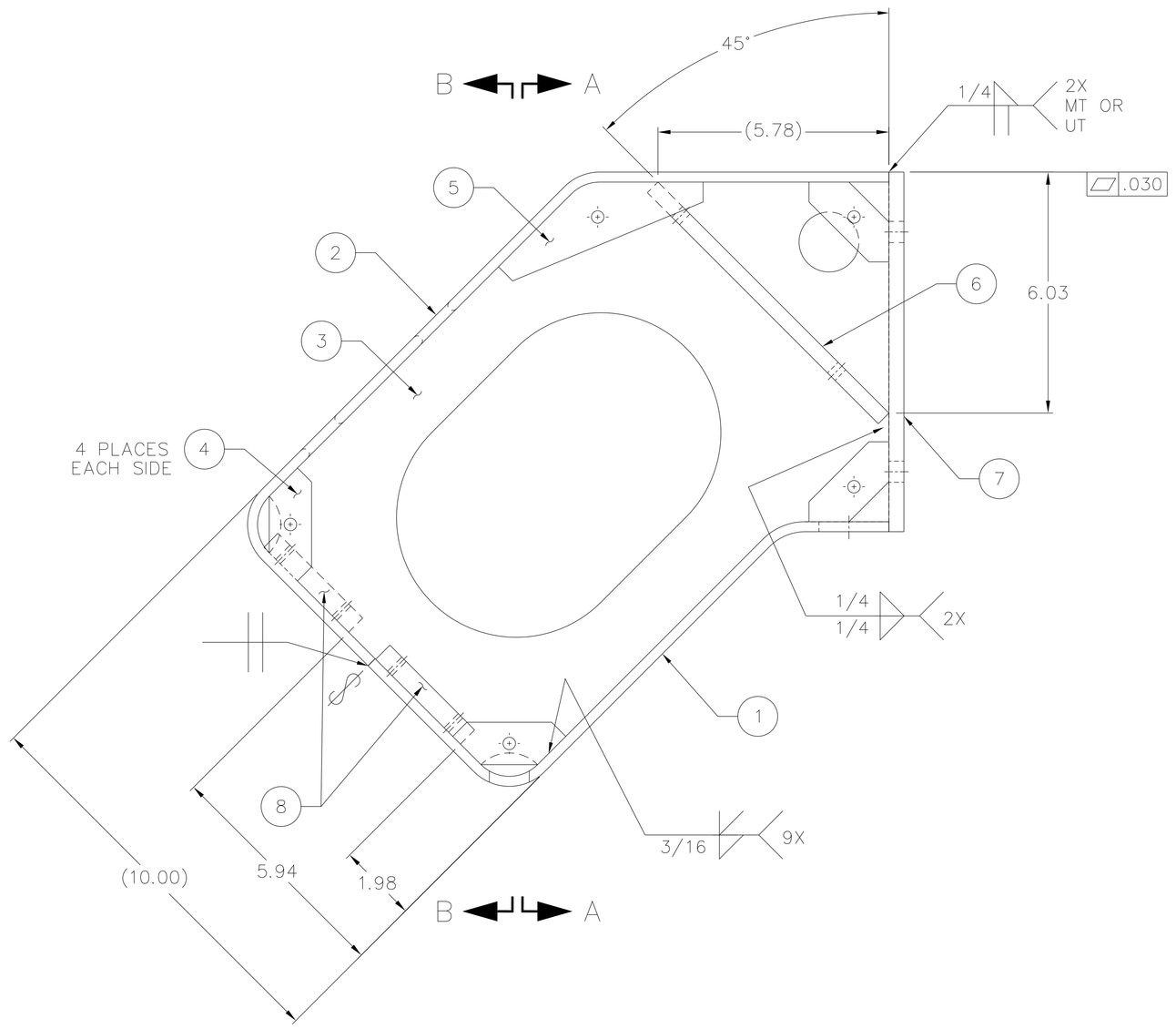

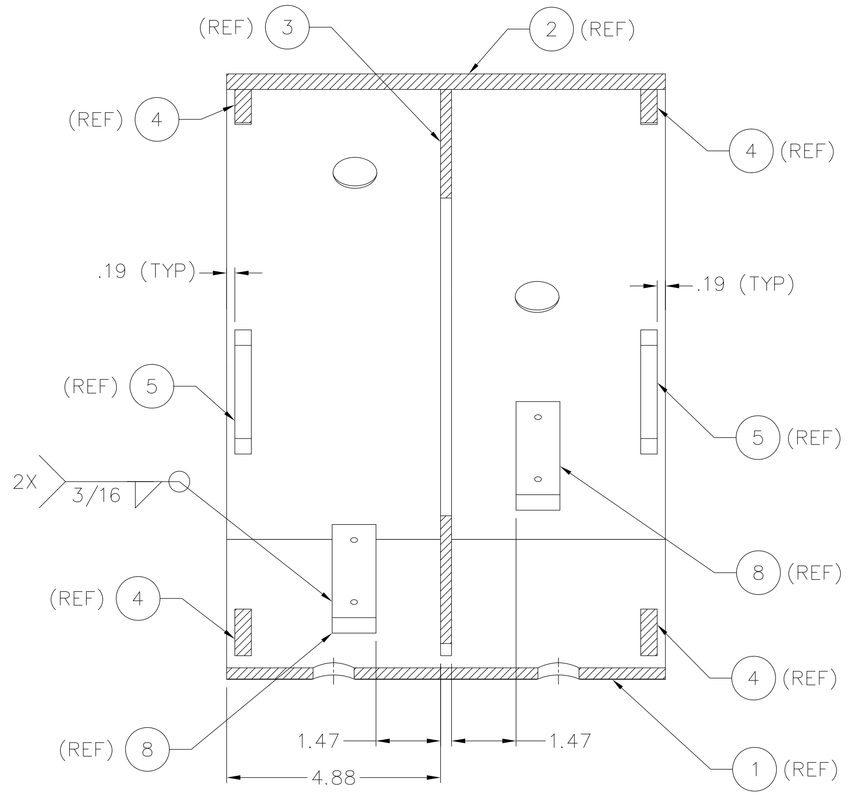

SECTION B-B

PART OR IDENTIFYING NO.	QTY REQD	CODE IDENT NO.	DRAWING OR SPECIFICATION	NOMENCLATURE OR DESCRIPTION	REMARKS
9	AR	53711	5210545	STD PAINT PROCEDURE-UNREP	SEE NOTE 5
8	2	–	–	PLATE	1/2 X 1 X 3
7	1	–	–	PLATE	3/8 X 9 X 10
6	2	–	–	PLATE	3/8 X 3 X 8 1/4
5	2	–	–	PLATE	3/8 X 2 1/2 X 5 1/8
4	8	–	–	PLATE	3/8 X 2 X 2
3	1	–	–	PLATE	1/4 X 15 3/8 X 16 1/4
2	1	–	–	PLATE	1/4 X 10 X 31 3/8
1	1	–	–	PLATE	1/4 X 10 X 16 1/2

PARTS LIST

8287513

NOTICE OF CONFIGURATION CONTROL

THIS DRAWING DEFINES AN ITEM OF UNDERWAY REPLENISHMENT (UNREP) STANDARD HARDWARE. NO REVISION TO THIS DRAWING OR THE HARDWARE REPRESENTED BY IT IS AUTHORIZED WITHOUT THE WRITTEN APPROVAL OF THE NAVAL SEA SYSTEMS COMMAND.

DISTRIBUTION STATEMENT C: DISTRIBUTION AUTHORIZED TO U.S. GOVERNMENT AGENCIES AND THEIR CONTRACTORS: OTHER REQUESTS MUST BE REFERRED TO COMNAVSEA OR THE COGNIZANT NAVSEA CODE.

WARNING: THIS DOCUMENT CONTAINS TECHNICAL DATA WHOSE EXPORT IS RESTRICTED BY THE ARMS EXPORT CONTROL ACT (TITLE 22, U.S.C. SEC. 2751 ET SEQ.) OR EXECUTIVE ORDER 12470. VIOLATIONS OF THESE EXPORT LAWS ARE SUBJECT TO SEVERE CRIMINAL PENALTIES.

DESTRUCTION NOTICE: DESTROY BY ANY METHOD THAT WILL PREVENT DISCLOSURE OF CONTENTS OR RECONSTRUCTION OF THE DOCUMENT.

APPLICATION	
NEXT ASSY	USED ON
8287500	8287500

6	5	4	3	2	1
			–	–	–

SHEET NUMBER

REVISION STATUS OF SHEETS

MATERIAL: CRES ASTM 240 GRADE 316L

UNLESS OTHERWISE SPECIFIED: ALL DIMENSIONS ARE IN INCHES TOLERANCES: ANGLES± .5° FRACTIONS± DECIMALS .XX± .02 .XXX± .005 BEND RADII FILLETS & ROUNDS 250/ SURFACE FINISH √ BREAK ALL SHARP EDGES

INTERPRET DRAWING IN ACCORDANCE WITH STANDARDS PRESCRIBED IN ASME Y14.100

DO NOT SCALE THIS DRAWING

PORT HUENEME DIVISION
NAVAL SURFACE WARFARE CENTER
4363 MISSILE WAY
PORT HUENEME, CA 93043-4307

PREPARED	AMSEC	06-07
CHECKED		
TECH LEAD		
BR HD		
ACCEPTED BY NAVSEA		(SIGNATURE DOES NOT DENOTE APPROVAL)
APPROVED FOR NAVSEA		(SIGN ONLY IF ENGINEERING HAS BEEN "PROVED" BY MANUFACTURE AND TEST)

DEPARTMENT OF THE NAVY
NAVAL SEA SYSTEMS COMMAND
WASHINGTON,D.C. 20376-5160

HEAVY UNREP-NAVY STANDARD
RAM TENSIONER

ARC SENDING UNIT BRACKET

SIZE	CAGE CODE	NAVSEA DWG. NO.	REV
F	53711	8287513	–

SCALE 1/4 | UNIT WT 73.9 LBS | SHEET 1 OF 3

NSWC 4120/1A (REV. 03-92)

REVISIONS				
ZONE	LTR	DESCRIPTION	DATE	APPROVED

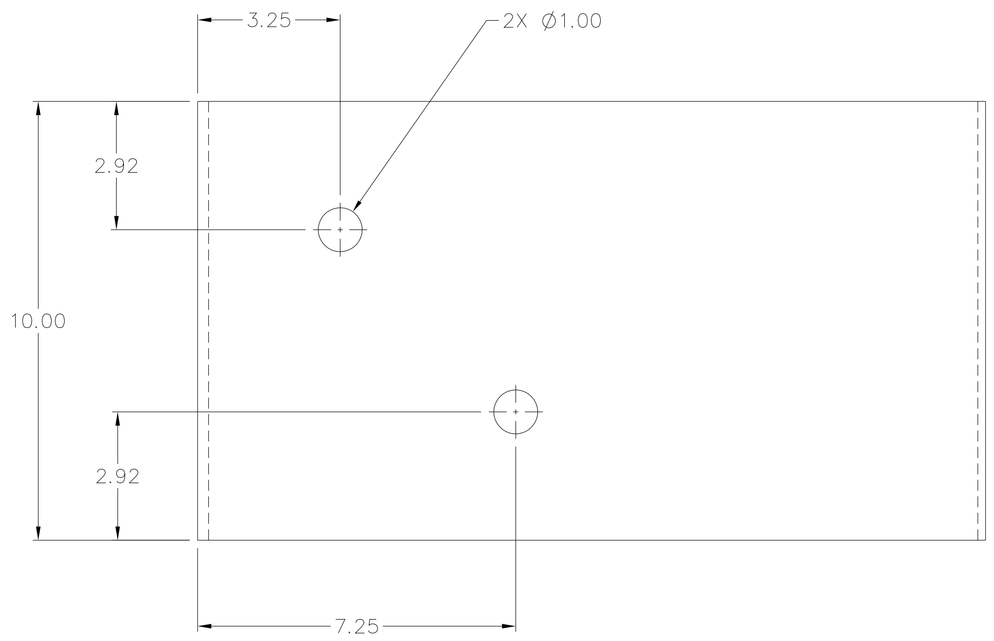

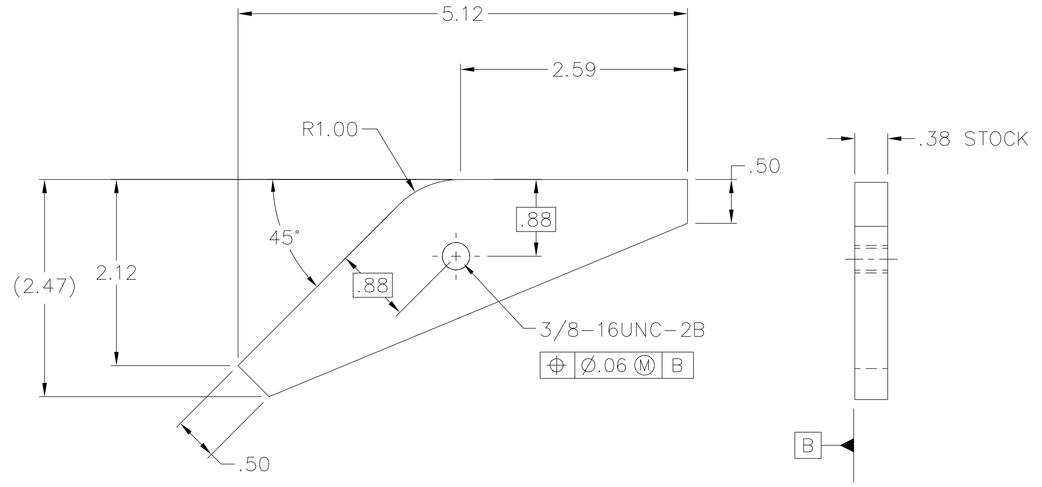

DETAIL OF PIECE 5

QTY 2 REQD

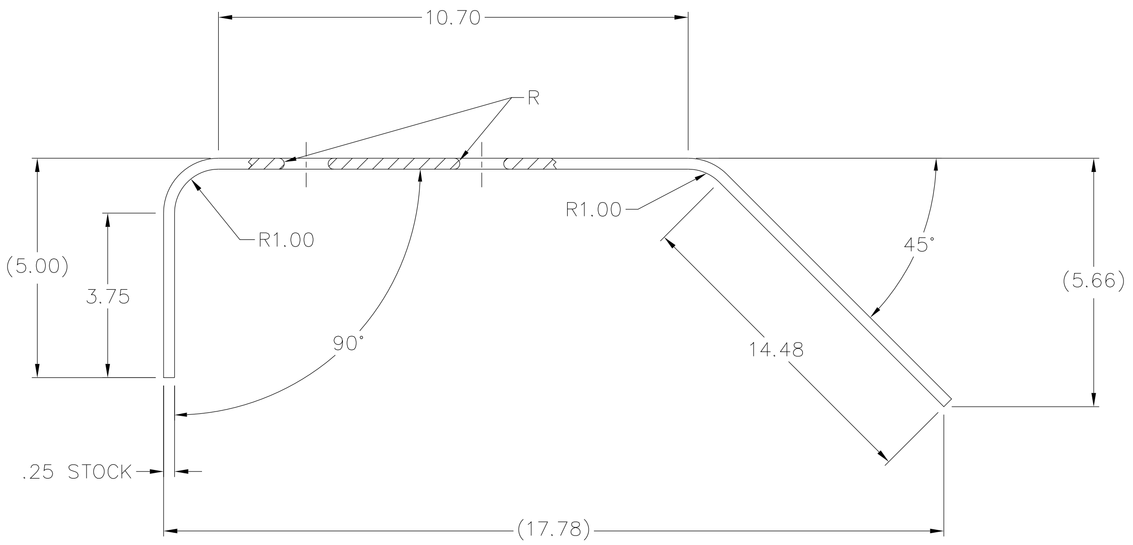

DETAIL OF PIECE 2

SCALE: 1/2

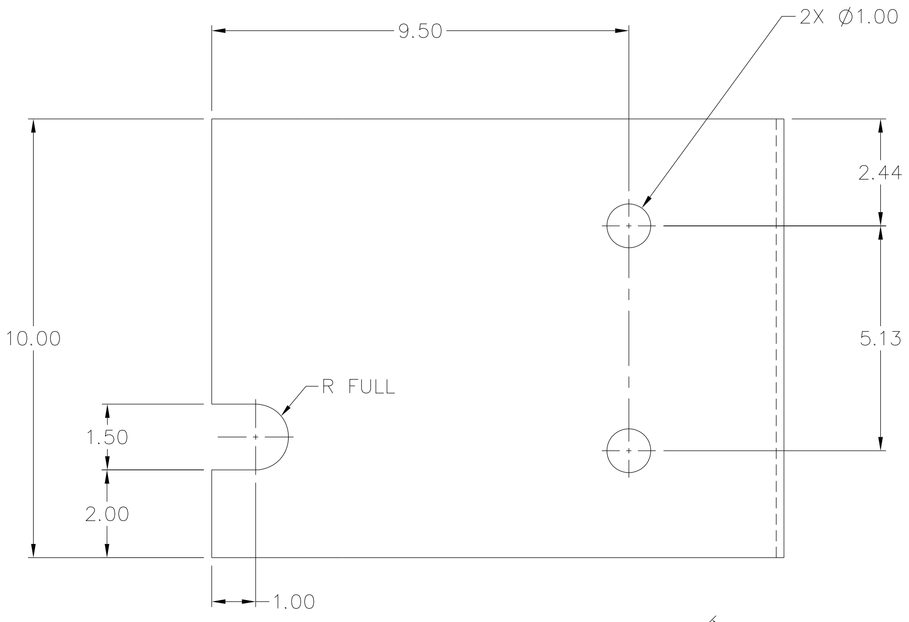

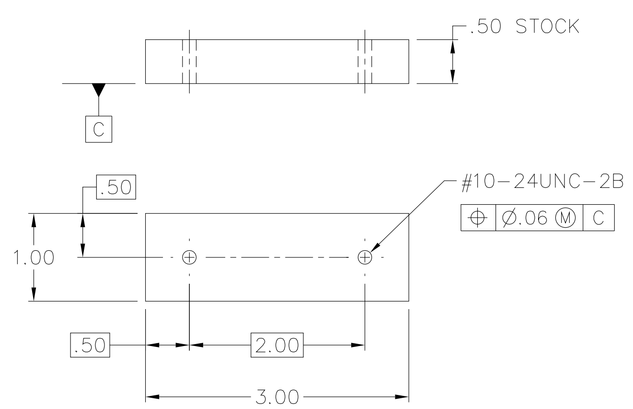

DETAIL OF PIECE 8

QTY 2 REQD

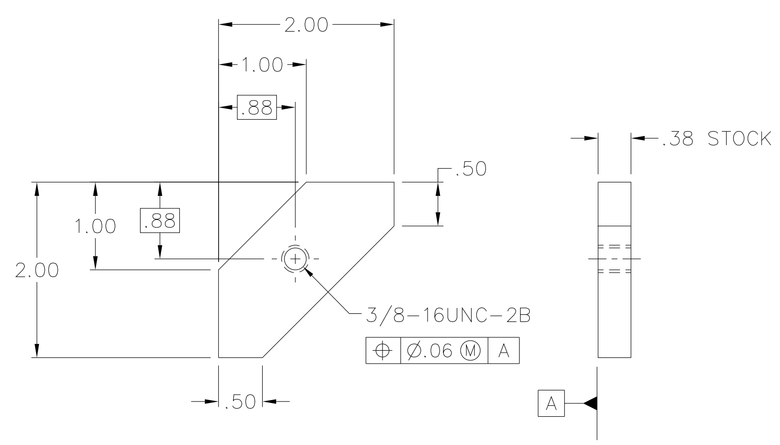

DETAIL OF PIECE 4

QTY 8 REQD

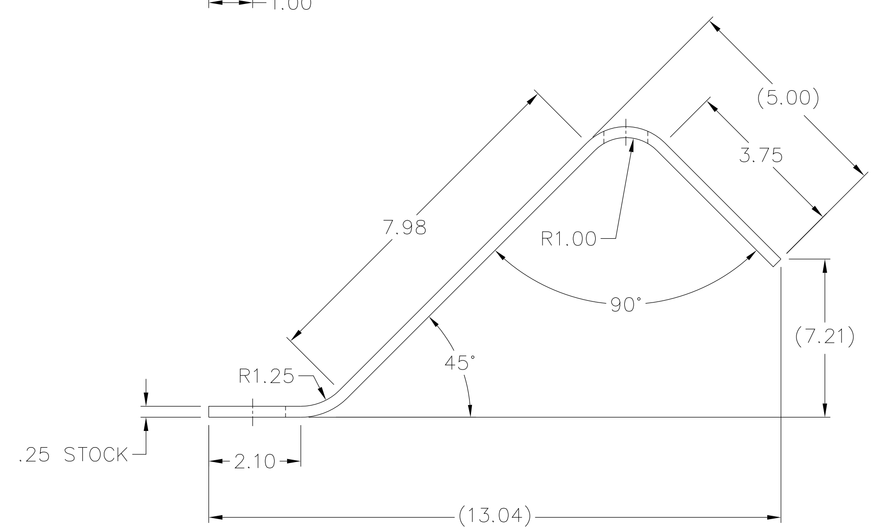

DETAIL OF PIECE 1

SCALE: 1/2

SIZE	CAGE CODE	NAVSEA DWG. NO.	REV
F	53711	8287513	—
SCALE 1/1 OR NOTED	UNIT WT ——	SHEET 2	

8287513

NSWC 4120/1A (REV. 03-92)

REVISIONS				
ZONE	LTR	DESCRIPTION	DATE	APPROVED

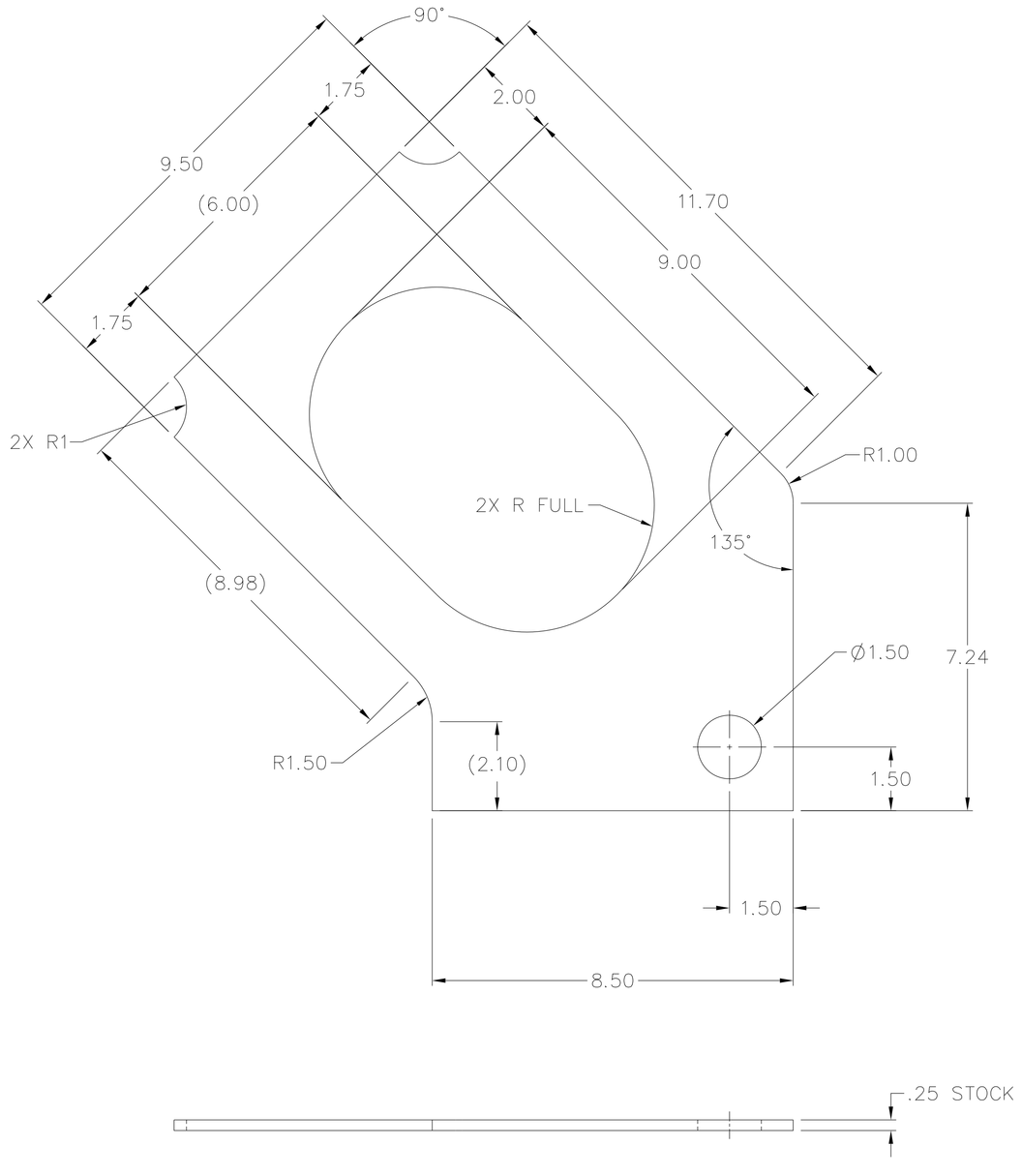

DETAIL OF PIECE 3

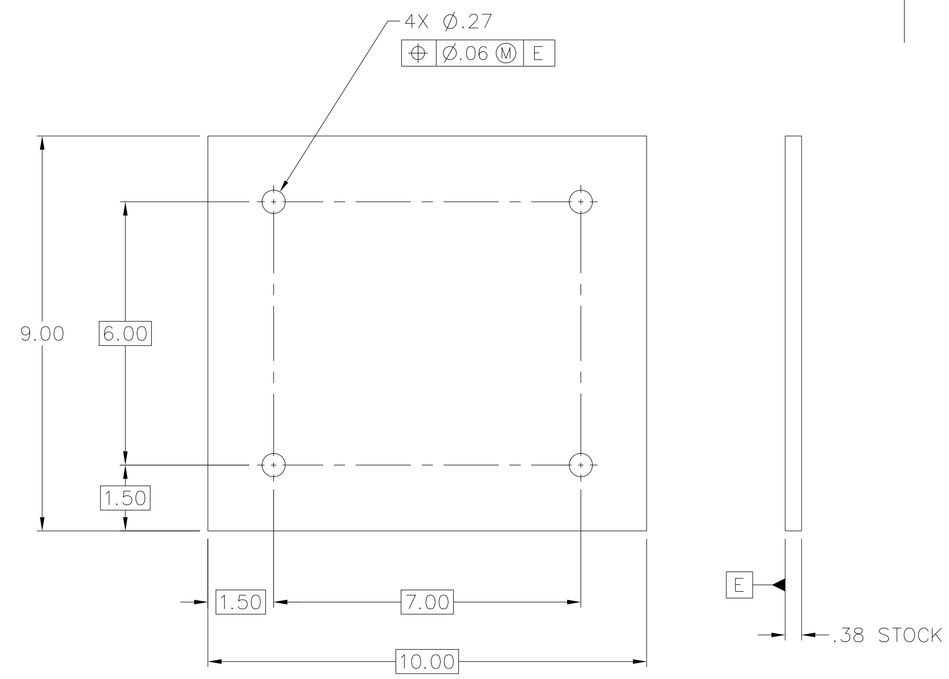

DETAIL OF PIECE 7

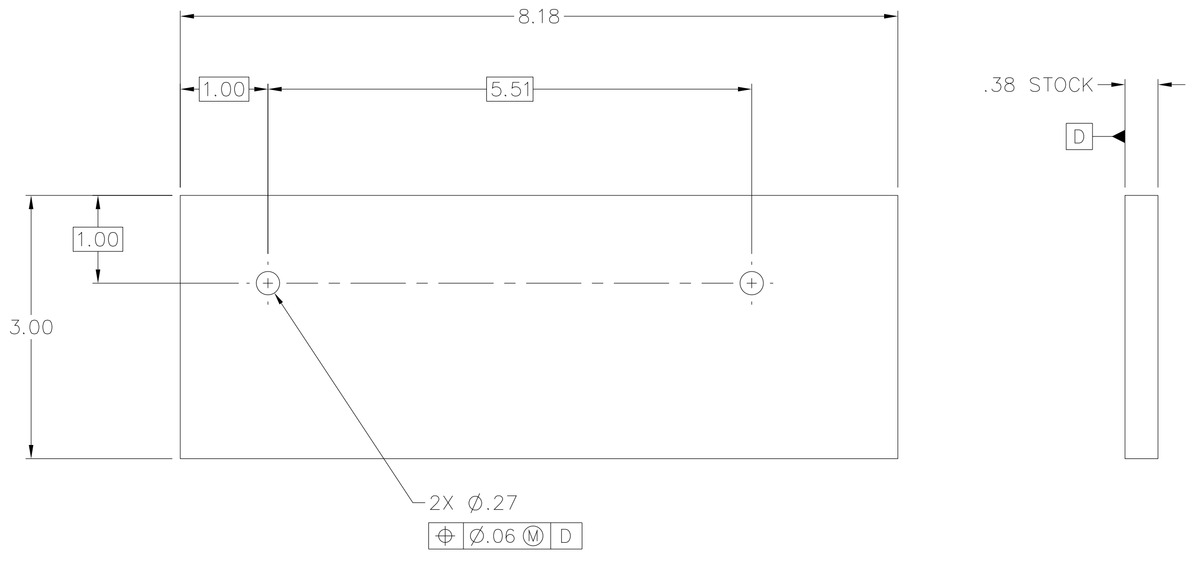

DETAIL OF PIECE 6

QTY 2 REQD

SIZE	CAGE CODE	NAVSEA DWG. NO.	REV
F	53711	8287513	–
SCALE 1/2 OR NOTED	UNIT WT ——	SHEET 3	

8287513

NSWC 4120/1A (REV. 03-92)

NOTES:

1. REMOVE OIL FROM SURFACES COMMON TO THE OUTER RACE OF THE ROLLER BEARING, PC 2, INSTALL BEARING SEAL, PC 3 (2 EACH) WITH LIP OUT AS SHOWN.

REVISIONS				
ZONE	LTR	DESCRIPTION	DATE	APPROVED

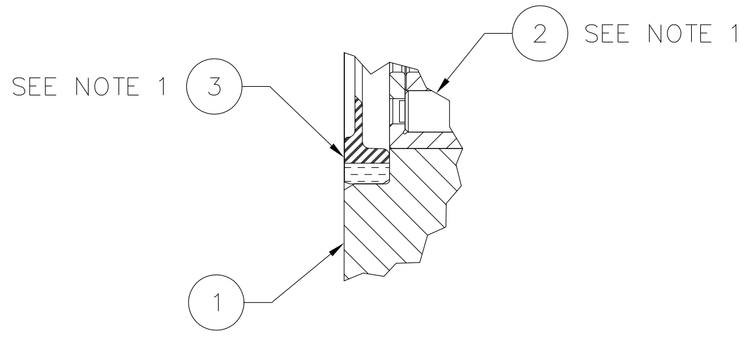

DETAIL C
SCALE: 1/1

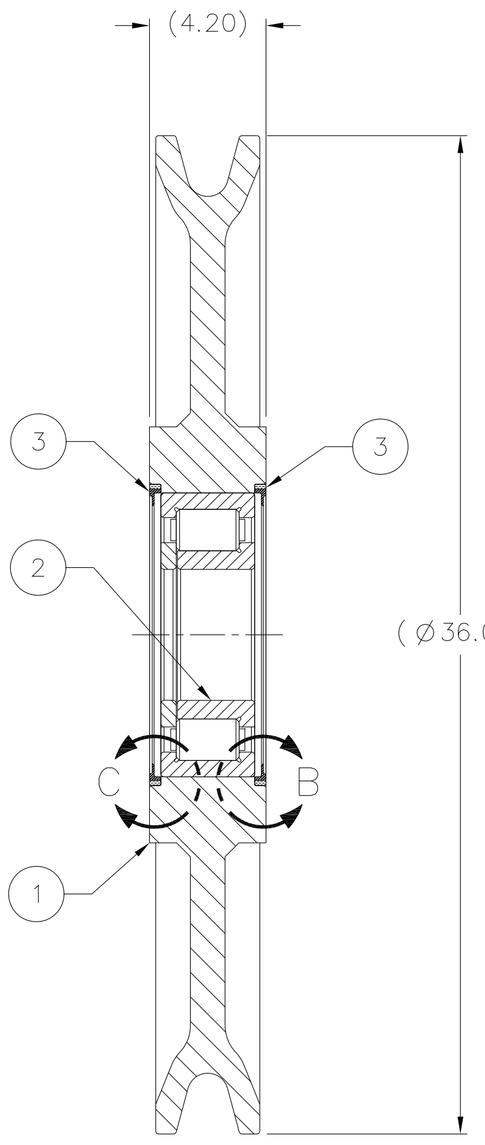

SECTION A–A

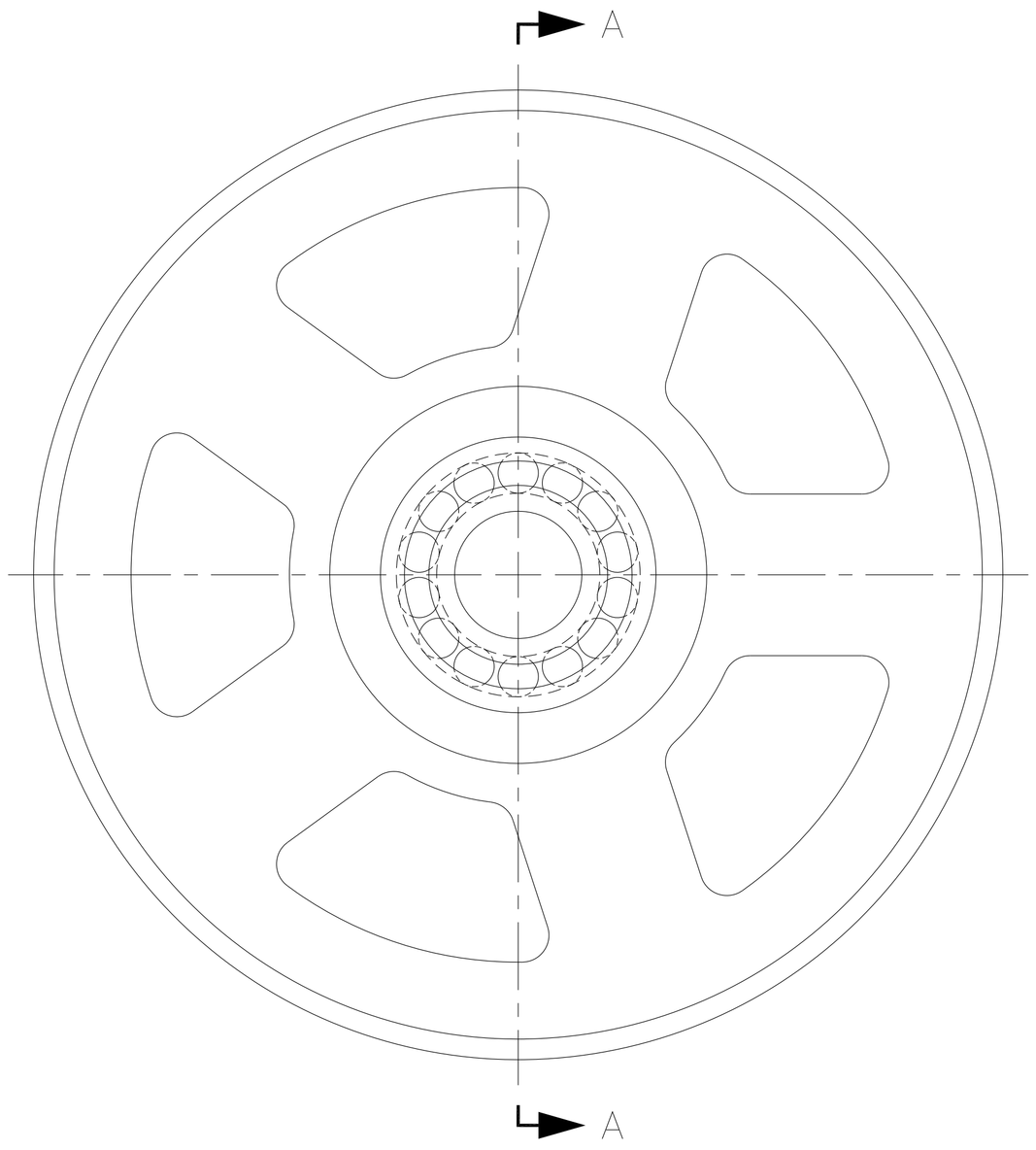

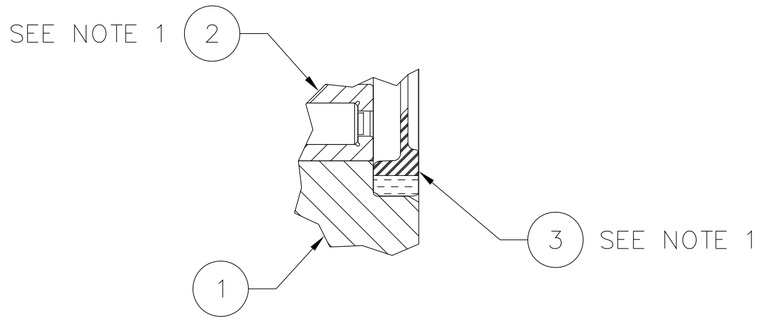

DETAIL B
SCALE: 1/1

PART OR IDENTIFYING NO.	QTY REQD	CODE IDENT NO.	DRAWING OR SPECIFICATION	NOMENCLATURE OR DESCRIPTION	REMARKS
3	2	–	8287518	BEARING SEAL	
2	1	–	8287517	ROLLER BEARING	
1	1	–	8287589	SHEAVE	FOR 1 3/8 WIRE ROPE

PARTS LIST

APPLICATION	
NEXT ASSY	USED ON
8287501	8287500
8287503	

MATERIAL:

UNLESS OTHERWISE SPECIFIED:
ALL DIMENSIONS ARE IN INCHES
TOLERANCES: ANGLES±
FRACTIONS±
DECIMALS
.XX±
.XXX±
BEND RADII
FILLETS & ROUNDS
SURFACE FINISH √
BREAK ALL SHARP EDGES
INTERPRET DRAWING IN ACCORDANCE WITH STANDARDS PRESCRIBED IN ASME Y14.100
DO NOT SCALE THIS DRAWING

PORT HUENEME DIVISION
NAVAL SURFACE WARFARE CENTER
4363 MISSILE WAY
PORT HUENEME, CA 93043-4307

PREPARED	AMSEC	06-07
CHECKED		
TECH LEAD		
BR HD		
ACCEPTED BY NAVSEA	(SIGNATURE DOES NOT DENOTE APPROVAL)	
APPROVED FOR NAVSEA	(SIGN ONLY IF ENGINEERING HAS BEEN "PROVED" BY MANUFACTURE AND TEST)	

DEPARTMENT OF THE NAVY
NAVAL SEA SYSTEMS COMMAND
WASHINGTON, D.C. 20376-5160

HEAVY UNREP–NAVY STANDARD
RAM TENSIONER

SHEAVE ASSEMBLY

SIZE	CAGE CODE	NAVSEA DWG NO.	REV
D	53711	8287514	–

SCALE 1/4 | UNIT WT 503.5 LBS | SHEET 1 OF 1

8287514

NOTICE OF CONFIGURATION CONTROL

THIS DRAWING DEFINES AN ITEM OF UNDERWAY REPLENISHMENT (UNREP) STANDARD HARDWARE. NO REVISION TO THIS DRAWING OR THE HARDWARE REPRESENTED BY IT IS AUTHORIZED WITHOUT THE WRITTEN APPROVAL OF THE NAVAL SEA SYSTEMS COMMAND.

DISTRIBUTION STATEMENT C: DISTRIBUTION AUTHORIZED TO U.S. GOVERNMENT AGENCIES AND THEIR CONTRACTORS: OTHER REQUESTS MUST BE REFERRED TO COMNAVSEA OR THE COGNIZANT NAVSEA CODE.

WARNING: THIS DOCUMENT CONTAINS TECHNICAL DATA WHOSE EXPORT IS RESTRICTED BY THE ARMS EXPORT CONTROL ACT (TITLE 22, U.S.C. SEC. 2751 ET SEQ.) OR EXECUTIVE ORDER 12470. VIOLATIONS OF THESE EXPORT LAWS ARE SUBJECT TO SEVERE CRIMINAL PENALTIES.

DESTRUCTION NOTICE: DESTROY BY ANY METHOD THAT WILL PREVENT DISCLOSURE OF CONTENTS OR RECONSTRUCTION OF THE DOCUMENT.

NOTES:

1. PAINT ALL SURFACES USING PROCEDURES AND MATERIALS SPECIFIED IN PC 1 USING SPECIAL PROCEDURE FOR RAM TENSIONERS.

REVISIONS				
ZONE	LTR	DESCRIPTION	DATE	APPROVED

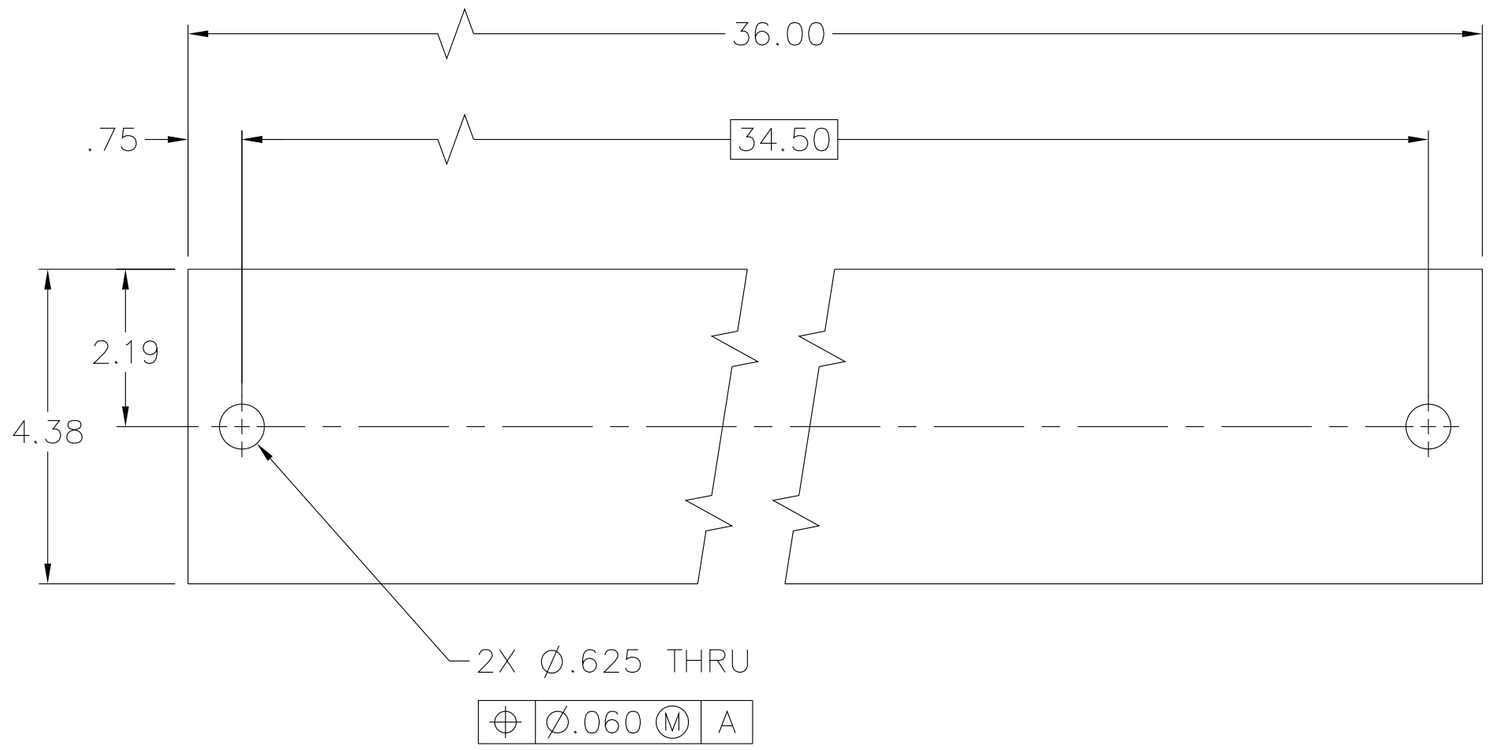

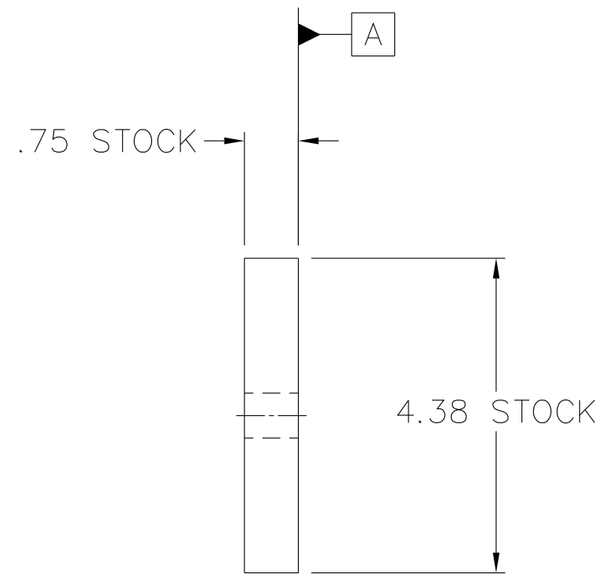

8287515 -

PART OR IDENTIFYING NO.	QTY REQD	CODE IDENT NO.	DRAWING OR SPECIFICATION	NOMENCLATURE OR DESCRIPTION	REMARKS
1	AR	53711	5210545	STD PAINT PROCEDURE–UNREP	SEE NOTE 1

PARTS LIST

NOTICE OF CONFIGURATION CONTROL

THIS DRAWING DEFINES AN ITEM OF UNDERWAY REPLENISHMENT (UNREP) STANDARD HARDWARE. NO REVISION TO THIS DRAWING OR THE HARDWARE REPRESENTED BY IT IS AUTHORIZED WITHOUT THE WRITTEN APPROVAL OF THE NAVAL SEA SYSTEMS COMMAND.

APPLICATION	
NEXT ASSY	USED ON
8287501	8287500

MATERIAL:

CRES, TY 316
ASTM A240

UNLESS OTHERWISE SPECIFIED:
ALL DIMENSIONS ARE IN INCHES
TOLERANCES: ANGLES±
FRACTIONS±
DECIMALS
.XX± .02
.XXX± .005
BEND RADII
FILLETS & ROUNDS
SURFACE FINISH 250/
BREAK ALL SHARP EDGES

INTERPRET DRAWING IN ACCORDANCE WITH STANDARDS PRESCRIBED IN ASME Y14.100

DO NOT SCALE THIS DRAWING

PORT HUENEME DIVISION
NAVAL SURFACE WARFARE CENTER
4363 MISSILE WAY
PORT HUENEME, CA 93043–4307

PREPARED	AMSEC	06–07
CHECKED		
TECH LEAD		
BR HD		
ACCEPTED BY NAVSEA	(SIGNATURE DOES NOT DENOTE APPROVAL)	
APPROVED FOR NAVSEA	(SIGN ONLY IF ENGINEERING HAS BEEN "PROVED" BY MANUFACTURE AND TEST)	

DEPARTMENT OF THE NAVY
NAVAL SEA SYSTEMS COMMAND
WASHINGTON, D.C. 20376–5160

HEAVY UNREP–NAVY STANDARD
RAM TENSIONER

FILLER PLATE

SIZE	CAGE CODE	NAVSEA DWG NO.	REV
C	53711	8287515	–

SCALE 1/2 | UNIT WT 1.0 LBS | SHEET 1 OF 1

NSWC 4120/4 (REV. 03–92)

REVISIONS				
ZONE	LTR	DESCRIPTION	DATE	APPROVED

SUGGESTED SOURCE(S) OF SUPPLY			
SUPPLIER/VENDOR DATA			
CAGE	PART/DRAWING NUMBER	NAME & ADDRESS	APPLICATION
30780	8F650L	PARKER-HANNIFIN CORP DBA TUBE FITTINGS DIVISION 3885 GATEWAY BLVD COLUMBUS, OH 43228	HEAVY UNREP NAVY STANDARD RAM TENSIONER
79926	SS8GC	SSP FITTINGS CORP. 8250 BOYLE PARKWAY TWINSBURG, OH 44087	HEAVY UNREP NAVY STANDARD RAM TENSIONER

NOTES:

1. IDENTIFICATION OF THE "SUGGESTED SOURCE(S) OF SUPPLY" HEREON IS NOT TO BE CONSTRUED AS A GUARANTEE OF PRESENT OR CONTINUED AVAILABILITY AS A SOURCE OF SUPPLY FOR THE ITEM DESCRIBED ON THE DRAWING.
2. THE SUGGESTED SOURCE(S) LISTED ARE NOT INTENDED TO REPRESENT THE ONLY SOURCE(S) FOR THE ITEM(S).
3. CONNECTOR ASSEMBLIES SHALL BE RATED FOR 6000 PSIG WORKING PRESSURE.
4. SWIVEL ADAPTER ASSEMBLY SHALL BE PROVIDED WITHOUT O-RINGS.

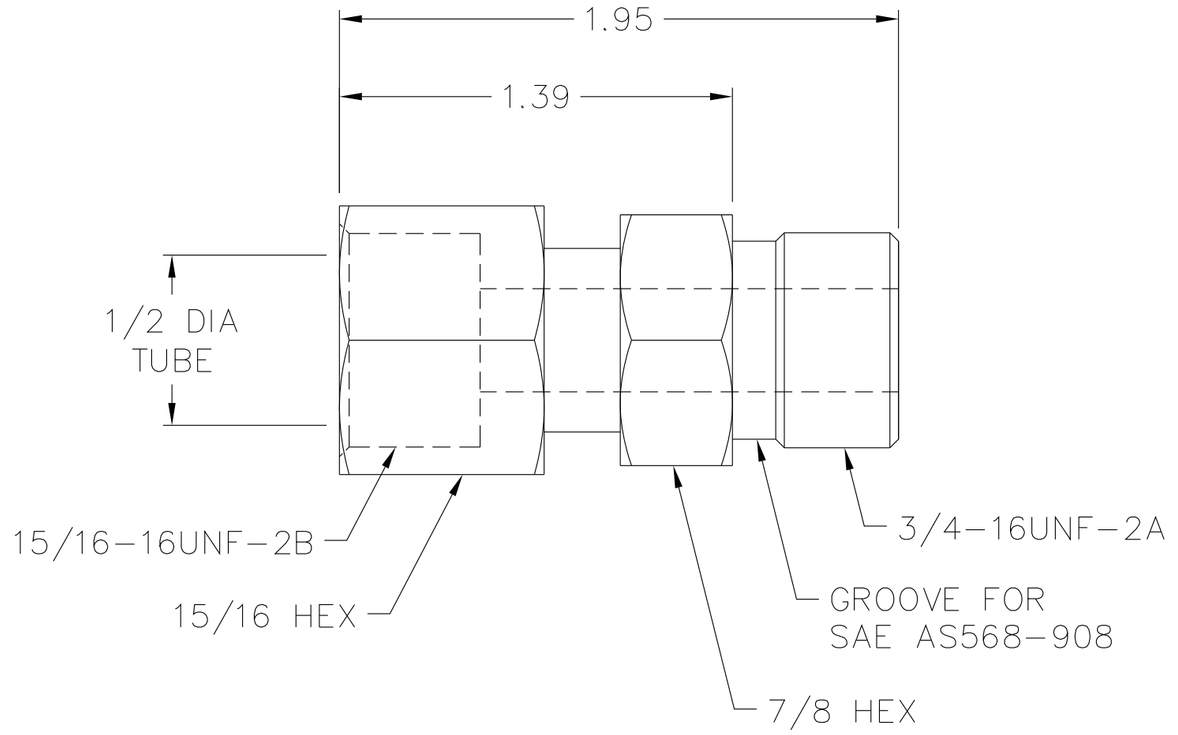

SPECIFICATION CONTROL DRAWING

PART OR IDENTIFYING NO.	QTY REQD	CODE IDENT NO.	DRAWING OR SPECIFICATION	NOMENCLATURE OR DESCRIPTION	REMARKS

PARTS LIST

DISTRIBUTION STATEMENT C: DISTRIBUTION AUTHORIZED TO U.S. GOVERNMENT AGENCIES AND THEIR CONTRACTORS; OTHER REQUESTS MUST BE REFERRED TO COMNAVSEA OR THE COGNIZANT NAVSEA CODE.

WARNING: THIS DOCUMENT CONTAINS TECHNICAL DATA WHOSE EXPORT IS RESTRICTED BY THE ARMS EXPORT CONTROL ACT (TITLE 22, U.S.C. SEC. 2751 ET SEQ.) OR EXECUTIVE ORDER 12470. VIOLATIONS OF THESE EXPORT LAWS ARE SUBJECT TO SEVERE CRIMINAL PENALTIES.

DESTRUCTION NOTICE: DESTROY BY ANY METHOD THAT WILL PREVENT DISCLOSURE OF CONTENTS OR RECONSTRUCTION OF THE DOCUMENT.

NOTICE OF CONFIGURATION CONTROL

THIS DRAWING DEFINES AN ITEM OF UNDERWAY REPLENISHMENT (UNREP) STANDARD HARDWARE. NO REVISION TO THIS DRAWING OR THE HARDWARE REPRESENTED BY IT IS AUTHORIZED WITHOUT THE WRITTEN APPROVAL OF THE NAVAL SEA SYSTEMS COMMAND.

APPLICATION	
NEXT ASSY	USED ON
8287500	8287500

MATERIAL:
CRES

UNLESS OTHERWISE SPECIFIED:
ALL DIMENSIONS ARE IN INCHES
TOLERANCES: ANGLES±
FRACTIONS± 1/32
DECIMALS
.XX±
.XXX±
BEND RADII
FILLETS & ROUNDS

SURFACE FINISH √
BREAK ALL SHARP EDGES

INTERPRET DRAWING IN ACCORDANCE WITH STANDARDS PRESCRIBED IN ASME Y14.100

DO NOT SCALE THIS DRAWING

PREPARED	AMSEC	06-07
CHECKED		
TECH LEAD		
BR HD		
ACCEPTED BY NAVSEA		(SIGNATURE DOES NOT DENOTE APPROVAL)
APPROVED FOR NAVSEA		(SIGN ONLY IF ENGINEERING HAS BEEN "PROVED" BY MANUFACTURE AND TEST)

PORT HUENEME DIVISION
NAVAL SURFACE WARFARE CENTER
4363 MISSILE WAY
PORT HUENEME, CA 93043-4307

DEPARTMENT OF THE NAVY
NAVAL SEA SYSTEMS COMMAND
WASHINGTON, D.C. 20376-5160

HEAVY UNREP-NAVY STANDARD
RAM TENSIONER

STRAIGHT THREAD SWIVEL CONNECTOR

SIZE	CAGE CODE	NAVSEA DWG NO.	REV
C	53711	8287516	-

SCALE FULL | UNIT WEIGHT: .5 LB | SHEET 1 OF 1

8287516 B

NSWC 4120/4 (REV. 03-92)

REVISIONS				
ZONE	LTR	DESCRIPTION	DATE	APPROVED

APPROVED SOURCE(S) OF SUPPLY			
SUPPLIER/VENDOR DATA			
CODE IDENT	PART/DRAWING NUMBER	NAME & ADDRESS	APPLICATION
51600	NUP2324EM-VAA	EMERSON POWER TRANSMISSION CORPORATION DBA ROLLWAY BEARING 909 LAFAYETTE ST VALPARAISO, IN 46383-4210	HEAVY UNREP NAVY STANDARD RAM TENSIONER

NOTES:

1. ONLY THE ITEM DESCRIBED ON THIS DRAWING WHEN PURCHASED FROM THE VENDOR(S) LISTED HEREON IS APPROVED BY THE NAVY FOR USE ON THE APPLICATION(S) SPECIFIED HEREIN. A SUBSTITUTE ITEM SHALL NOT BE USED WITHOUT PRIOR APPROVAL BY THE NAVY.
2. IDENTIFICATION OF THE "APPROVED SOURCE(S) OF SUPPLY" HEREON IS NOT TO BE CONSTRUED AS A GUARANTEE OF PRESENT OR CONTINUED AVAILABILITY AS A SOURCE OF SUPPLY FOR THE ITEM DESCRIBED ON THE DRAWING.
3. DIMENSIONS SHOWN IN SECTION A-A ARE MANDATORY.
4. ROLLER BEARING SHALL BE MANUFACTURED TO AMERICAN BEARING MANUFACTURERS ASSOCIATION (ABMA) RBEC-1 PRECISION CLASS.
5. ROLLER BEARING SHALL BE PROVIDED WITH TWO-FLANGE OUTER RACE AND TWO-FLANGE INNER RACE WITH ONE FLANGE PLATE AS SHOWN.
6. <u>BEARING SPECIFICATION:</u>

6.1 BASIC DYNAMIC CAPACITY: 179,680 LBS
6.2 BASIC STATIC CAPACITY: 235,410 LBS
6.3 RATING LIFE L^{10} = 28,613 HOURS
6.4 INTERNAL CLEARANCE BEFORE MOUNTING: .0032 - .0053 INCH
6.5 RING ROTATION: OUTER
6.6 TYPE OF LOADING: RADIAL

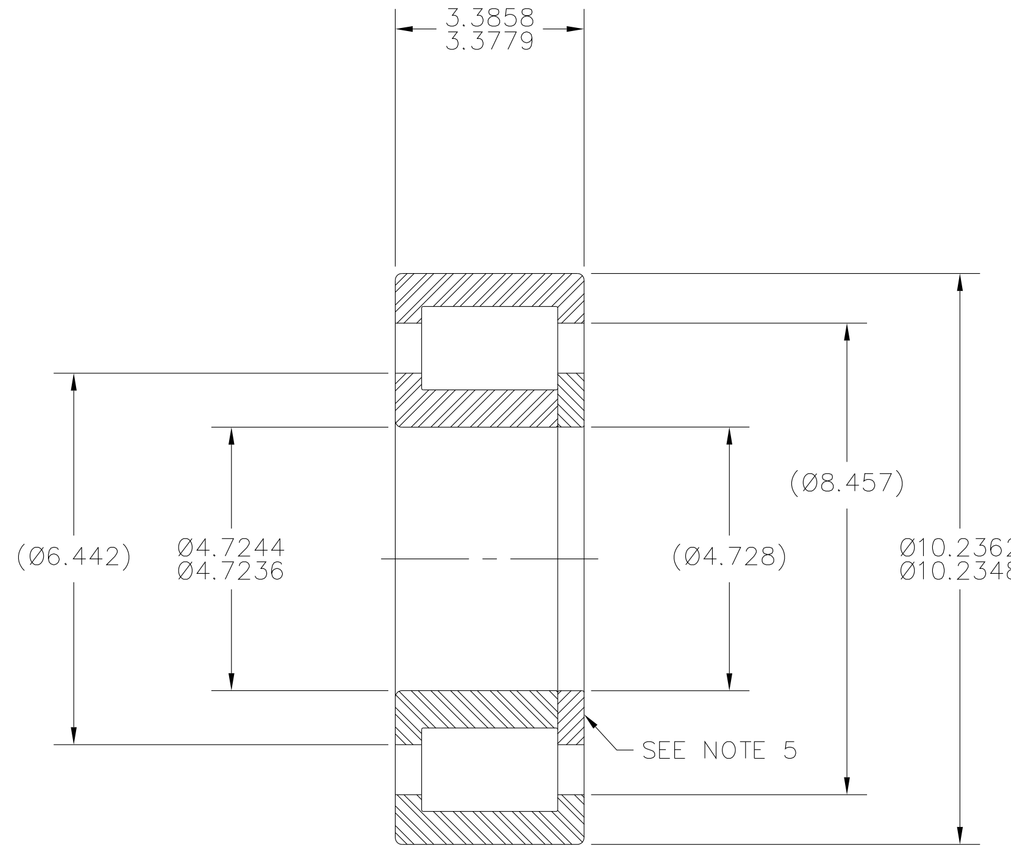

SECTION A-A

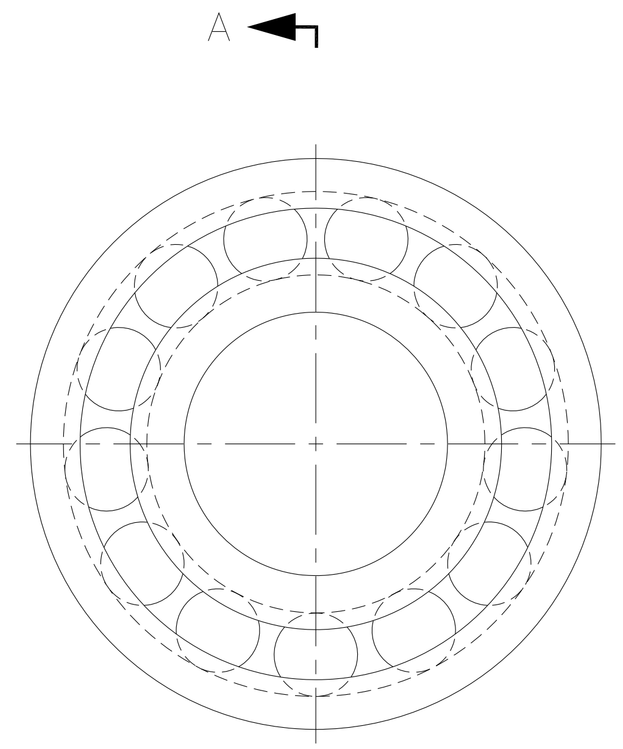

SOURCE CONTROL DRAWING

PART OR IDENTIFYING NO.	QTY REQD	CODE IDENT NO.	DRAWING OR SPECIFICATION	NOMENCLATURE OR DESCRIPTION	REMARKS

PARTS LIST

NOTICE OF CONFIGURATION CONTROL

THIS DRAWING DEFINES AN ITEM OF UNDERWAY REPLENISHMENT (UNREP) STANDARD HARDWARE. NO REVISION TO THIS DRAWING OR THE HARDWARE REPRESENTED BY IT IS AUTHORIZED WITHOUT THE WRITTEN APPROVAL OF THE NAVAL SEA SYSTEMS COMMAND.

DISTRIBUTION STATEMENT C: DISTRIBUTION AUTHORIZED TO U.S. GOVERNMENT AGENCIES AND THEIR CONTRACTORS: OTHER REQUESTS MUST BE REFERRED TO COMNAVSEA OR THE COGNIZANT NAVSEA CODE.

WARNING: THIS DOCUMENT CONTAINS TECHNICAL DATA WHOSE EXPORT IS RESTRICTED BY THE ARMS EXPORT CONTROL ACT (TITLE 22, U.S.C. SEC. 2751 ET SEQ.) OR EXECUTIVE ORDER 12470. VIOLATIONS OF THESE EXPORT LAWS ARE SUBJECT TO SEVERE CRIMINAL PENALTIES.

DESTRUCTION NOTICE: DESTROY BY ANY METHOD THAT WILL PREVENT DISCLOSURE OF CONTENTS OR RECONSTRUCTION OF THE DOCUMENT.

APPLICATION	
NEXT ASSY	USED ON
8287514	8287500

MATERIAL: VARIOUS

UNLESS OTHERWISE SPECIFIED:
ALL DIMENSIONS ARE IN INCHES
TOLERANCES: ANGLES±
FRACTIONS±
DECIMALS
.XX±
.XXX±
BEND RADII
FILLETS & ROUNDS
SURFACE FINISH √
BREAK ALL SHARP EDGES
INTERPRET DRAWING IN ACCORDANCE WITH STANDARDS PRESCRIBED IN ASME Y14.100
DO NOT SCALE THIS DRAWING

PORT HUENEME DIVISION NAVAL SURFACE WARFARE CENTER 4363 MISSILE WAY PORT HUENEME, CA 93043-4307		
PREPARED	AMSEC	06-07
CHECKED		
TECH LEAD		
BR HD		
ACCEPTED BY NAVSEA	(SIGNATURE DOES NOT DENOTE APPROVAL)	
APPROVED FOR NAVSEA	(SIGN ONLY IF ENGINEERING HAS BEEN "PROVED" BY MANUFACTURE AND TEST)	

DEPARTMENT OF THE NAVY
NAVAL SEA SYSTEMS COMMAND
WASHINGTON, D.C. 20376-5160

HEAVY UNREP-NAVY STANDARD
RAM TENSIONER

ROLLER BEARING

SIZE	CAGE CODE	NAVSEA DWG NO.	REV
D	53711	8287517	-

SCALE 1/2 | UNIT WT 50 LBS | SHEET 1 OF 1

[8287517 -]

NSWC 4120/8 (REV 03-92)

REVISIONS				
ZONE	LTR	DESCRIPTION	DATE	APPROVED

SUGGESTED SOURCE OF SUPPLY			
SUPPLIER/VENDOR DATA			
CODE IDENT	PART/DRAWING NUMBER	NAME & ADDRESS	APPLICATION
48482	70017-H1L5	PARKER HANNIFIN CORPORATION DBA J M CLIPPER DIVISION ENGINEERED POLYMER SYSTEMS 403 INDUSTRIAL DRIVE NACOGDOCHES, TX 75964-1297	HEAVY UNREP NAVY STANDARD RAM TENSIONER

NOTES:

1. IDENTIFICATION OF THE "SUGGESTED SOURCE(S) OF SUPPLY" HEREON IS NOT TO BE CONSTRUED AS A GUARANTEE OF PRESENT OR CONTINUED AVAILABILITY AS A SOURCE OF SUPPLY FOR THE ITEM DESCRIBED ON THE DRAWING.
2. DIMENSIONS SHOWN IN SECTION A-A ARE MANDATORY.
3. BEARING SEAL IS USED TO RETAIN GENERAL PURPOSE GREASE, MIL-G-23549, IN SHEAVE ROLLER BEARING. THE SEAL IS USED IN A DYNAMIC APPLICATION (119 RPM MAX).

SECTION A-A
SCALE: 2/1

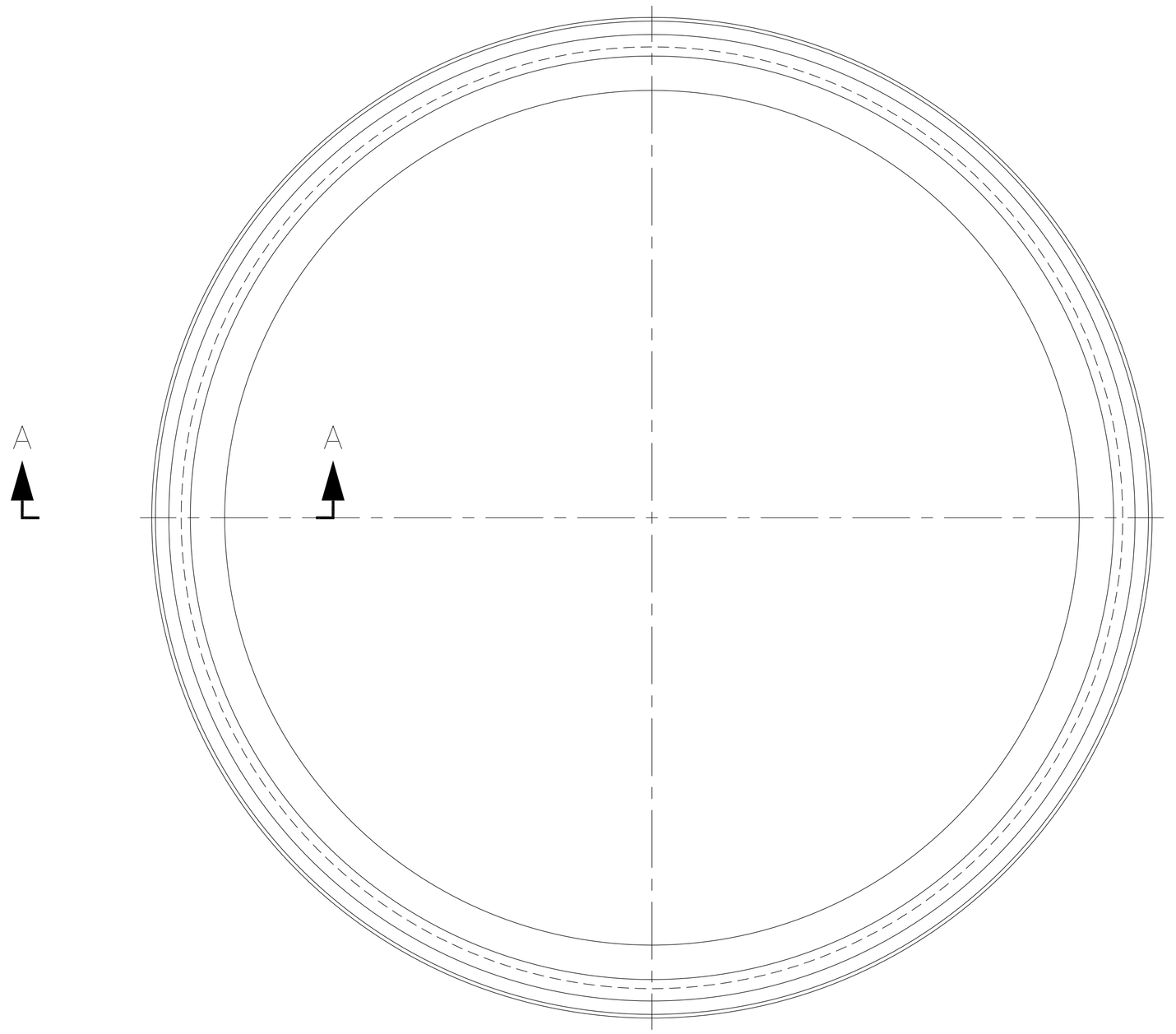

8287518

SPECIFICATION CONTROL DRAWING

PART OR IDENTIFYING NO.	QTY REQD	CODE IDENT NO.	DRAWING OR SPECIFICATION	NOMENCLATURE OR DESCRIPTION	REMARKS

PARTS LIST

NOTICE OF CONFIGURATION CONTROL

THIS DRAWING DEFINES AN ITEM OF UNDERWAY REPLENISHMENT (UNREP) STANDARD HARDWARE. NO REVISION TO THIS DRAWING OR THE HARDWARE REPRESENTED BY IT IS AUTHORIZED WITHOUT THE WRITTEN APPROVAL OF THE NAVAL SEA SYSTEMS COMMAND.

DISTRIBUTION STATEMENT C: DISTRIBUTION AUTHORIZED TO U.S. GOVERNMENT AGENCIES AND THEIR CONTRACTORS: OTHER REQUESTS MUST BE REFERRED TO COMNAVSEA OR THE COGNIZANT NAVSEA CODE.

WARNING: THIS DOCUMENT CONTAINS TECHNICAL DATA WHOSE EXPORT IS RESTRICTED BY THE ARMS EXPORT CONTROL ACT (TITLE 22, U.S.C. SEC. 2751 ET SEQ.) OR EXECUTIVE ORDER 12470. VIOLATIONS OF THESE EXPORT LAWS ARE SUBJECT TO SEVERE CRIMINAL PENALTIES.

DESTRUCTION NOTICE: DESTROY BY ANY METHOD THAT WILL PREVENT DISCLOSURE OF CONTENTS OR RECONSTRUCTION OF THE DOCUMENT.

APPLICATION	
NEXT ASSY	USED ON
8287514	8287500

MATERIAL: VARIOUS

UNLESS OTHERWISE SPECIFIED:
ALL DIMENSIONS ARE IN INCHES
TOLERANCES: ANGLES±
FRACTIONS±
DECIMALS
.XX±
.XXX±
BEND RADII
FILLETS & ROUNDS
SURFACE FINISH ✓
BREAK ALL SHARP EDGES
INTERPRET DRAWING IN ACCORDANCE WITH STANDARDS PRESCRIBED IN ASME Y14.100
DO NOT SCALE THIS DRAWING

PORT HUENEME DIVISION
NAVAL SURFACE WARFARE CENTER
4363 MISSILE WAY
PORT HUENEME, CA 93043-4307

PREPARED	AMSEC	06-07
CHECKED		
TECH LEAD		
BR HD		
ACCEPTED BY NAVSEA	(SIGNATURE DOES NOT DENOTE APPROVAL)	
APPROVED FOR NAVSEA	(SIGN ONLY IF ENGINEERING HAS BEEN "PROVED" BY MANUFACTURE AND TEST)	

DEPARTMENT OF THE NAVY
NAVAL SEA SYSTEMS COMMAND
WASHINGTON, D.C. 20376-5160

HEAVY UNREP-NAVY STANDARD
RAM TENSIONER

BEARING SEAL

SIZE	CAGE CODE	NAVSEA DWG NO.	REV
D	53711	8287518	—

SCALE 1/1 | UNIT WT 1 LB | SHEET 1 OF 1

NSWC 4120/8 (REV 03-92)

NOTES:

1. PAINT ALL SURFACES USING PROCEDURES AND MATERIALS SPECIFIED IN PC 2 FOR SPECIAL PROCEDURE FOR RAM TENSIONERS.

REVISIONS				
ZONE	LTR	DESCRIPTION	DATE	APPROVED

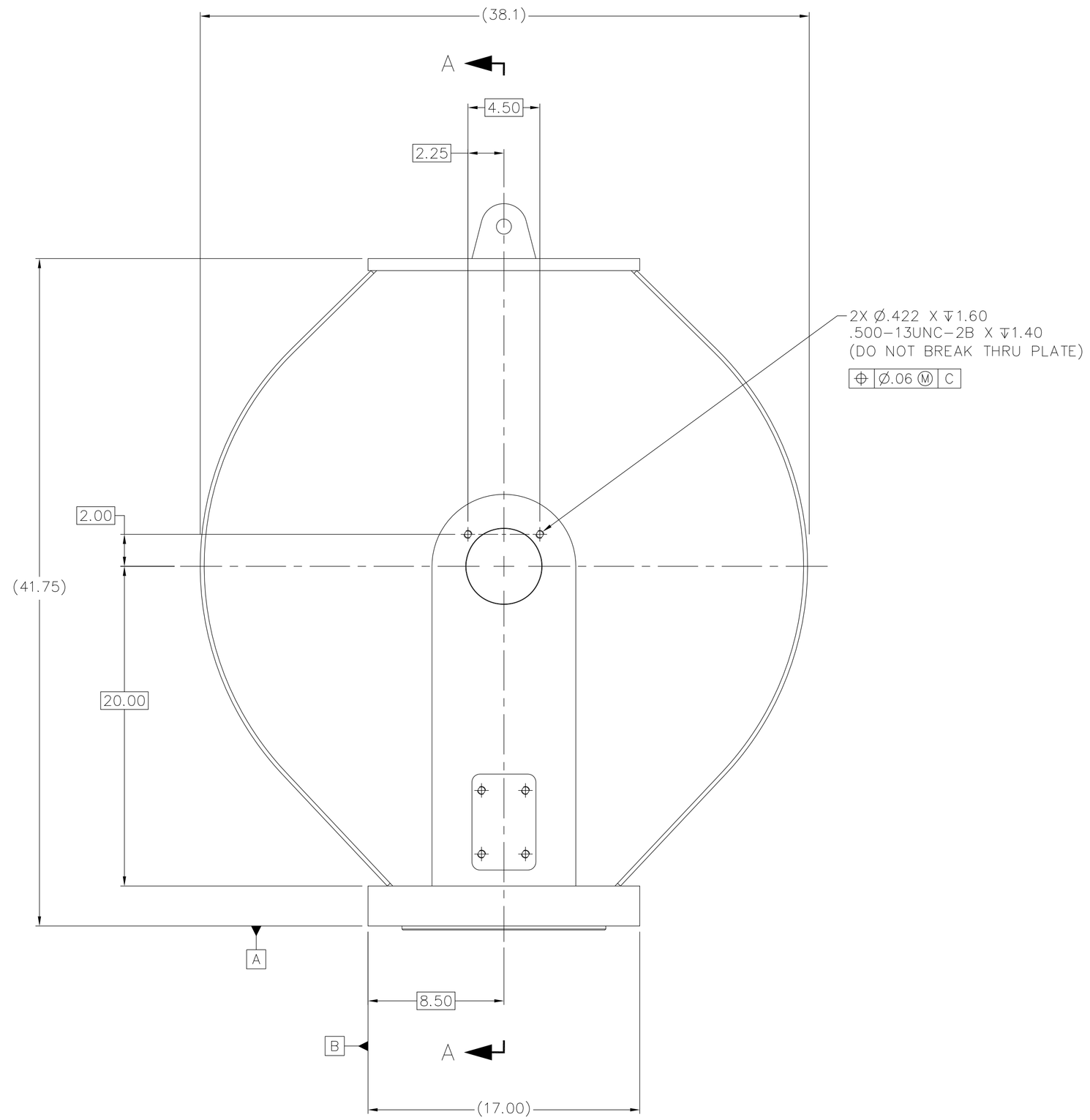

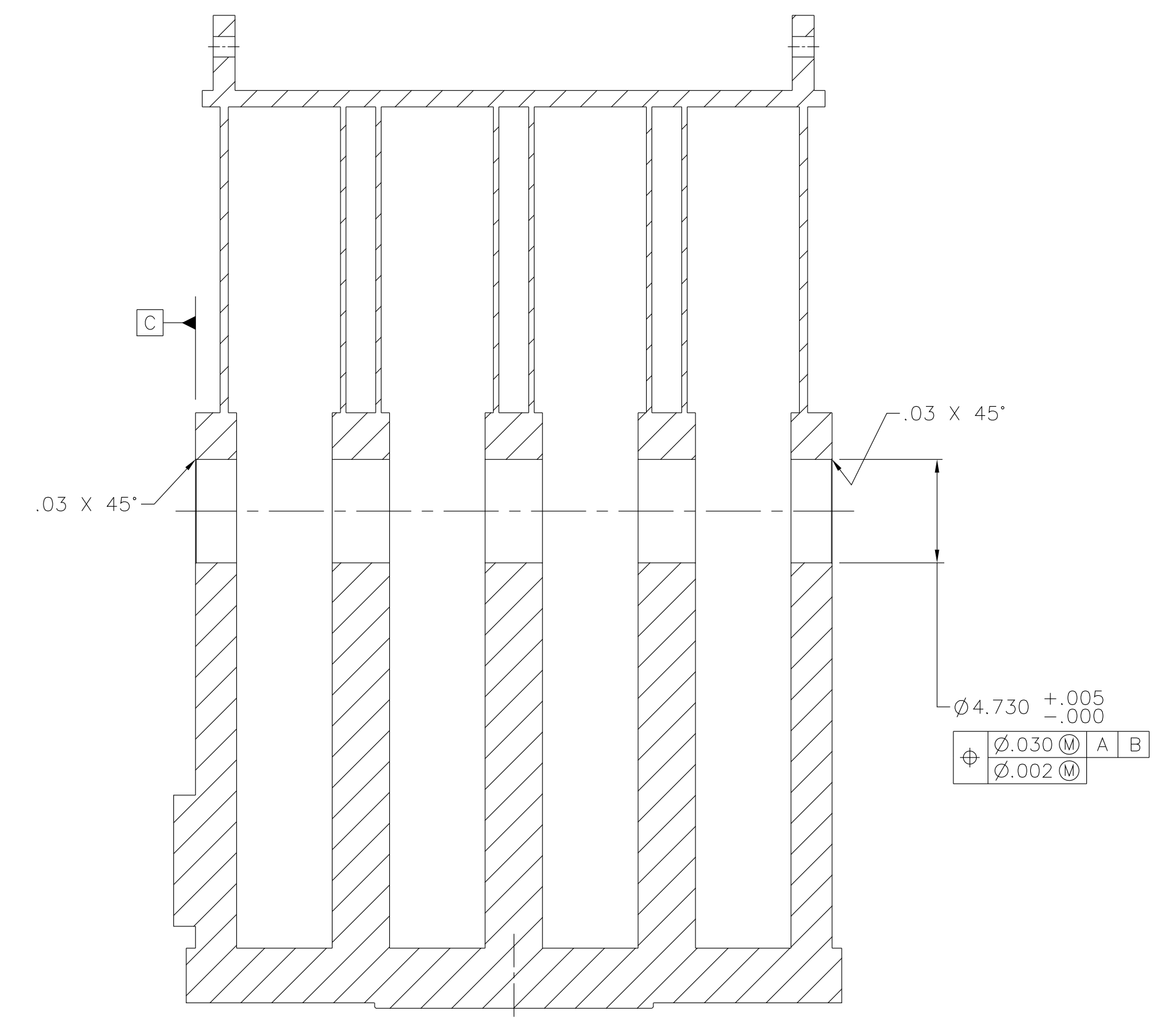

SECTION A–A

PART OR IDENTIFYING NO.	QTY REQD	CODE IDENT NO.	DRAWING OR SPECIFICATION	NOMENCLATURE OR DESCRIPTION	REMARKS
2	AR	53711	5210545	STD PAINT PROCEDURE–UNREP	SEE NOTE 1
1	1	–	8287520	UPR SHV HOUSING WELDMENT	

PARTS LIST

NOTICE OF CONFIGURATION CONTROL

THIS DRAWING DEFINES AN ITEM OF UNDERWAY REPLENISHMENT (UNREP) STANDARD HARDWARE. NO REVISION TO THIS DRAWING OR THE HARDWARE REPRESENTED BY IT IS AUTHORIZED WITHOUT THE WRITTEN APPROVAL OF THE NAVAL SEA SYSTEMS COMMAND.

DISTRIBUTION STATEMENT C: DISTRIBUTION AUTHORIZED TO U.S. GOVERNMENT AGENCIES AND THEIR CONTRACTORS; OTHER REQUESTS MUST BE REFERRED TO COMNAVSEA OR THE COGNIZANT NAVSEA CODE.

WARNING: THIS DOCUMENT CONTAINS TECHNICAL DATA WHOSE EXPORT IS RESTRICTED BY THE ARMS EXPORT CONTROL ACT (TITLE 22, U.S.C. SEC. 2751 ET SEQ.) OR EXECUTIVE ORDER 12470. VIOLATIONS OF THESE EXPORT LAWS ARE SUBJECT TO SEVERE CRIMINAL PENALTIES.

DESTRUCTION NOTICE: DESTROY BY ANY METHOD THAT WILL PREVENT DISCLOSURE OF CONTENTS OR RECONSTRUCTION OF THE DOCUMENT.

APPLICATION	
NEXT ASSY	USED ON
8287503	8287500

MATERIAL:

UNLESS OTHERWISE SPECIFIED: ALL DIMENSIONS ARE IN INCHES
TOLERANCES: ANGLES± .5°
FRACTIONS±
DECIMALS
.XX± .03
.XXX± .010
BEND RADII
FILLETS & ROUNDS 125
SURFACE FINISH √
BREAK ALL SHARP EDGES
INTERPRET DRAWING IN ACCORDANCE WITH STANDARDS PRESCRIBED IN ASME Y14.100
DO NOT SCALE THIS DRAWING

PORT HUENEME DIVISION
NAVAL SURFACE WARFARE CENTER
4363 MISSILE WAY
PORT HUENEME, CA 93043-4307

PREPARED	AMSEC	06-07
CHECKED		
TECH LEAD		
BR HD		
ACCEPTED BY NAVSEA	(SIGNATURE DOES NOT DENOTE APPROVAL)	
APPROVED FOR NAVSEA	(SIGN ONLY IF ENGINEERING HAS BEEN "PROVED" BY MANUFACTURE AND TEST)	

DEPARTMENT OF THE NAVY
NAVAL SEA SYSTEMS COMMAND
WASHINGTON,D.C. 20376-5160

HEAVY UNREP–NAVY STANDARD
RAM TENSIONER

UPPER SHEAVE HOUSING

SIZE	CAGE CODE	NAVSEA DWG. NO.	REV
F	53711	8287519	–

SCALE 1/4 | UNIT WT 1600 LBS | SHEET 1 OF 1

8287519

NSWC 4120/1A (REV. 03-92)

NSWC 4120/A (REV. 03-92)

NOTICE OF CONFIGURATION CONTROL

THIS DRAWING DEFINES AN ITEM OF HARDWARE. REPLENISHMENT (UNREP) STANDARD HARDWARE. REPRESENTED BY IT IS AUTHORIZED WITHOUT THE NO REVISION TO THIS DRAWING OR THE HARDWARE WRITTEN APPROVAL OF THE NAVAL SEA SYSTEMS COMMAND.

DISTRIBUTION STATEMENT C: DISTRIBUTION AUTHORIZED TO U.S. GOVERNMENT AGENCIES AND THEIR CONTRACTORS; OTHER REQUESTS MUST BE REFERRED TO COMNAVSEA OR THE COGNIZANT NAVSEA CODE.

WARNING: THIS DOCUMENT CONTAINS TECHNICAL DATA WHOSE EXPORT IS RESTRICTED BY THE ARMS EXPORT CONTROL ACT (TITLE 22, U.S.C. SEC. 2751 ET SEQ.) OR EXECUTIVE ORDER 12470. VIOLATIONS OF THESE EXPORT LAWS ARE SUBJECT TO SEVERE CRIMINAL PENALTIES.

DESTRUCTION NOTICE: DESTROY BY ANY METHOD THAT WILL PREVENT DISCLOSURE OF CONTENTS OR RECONSTRUCTION OF THE DOCUMENT.

REVISION STATUS OF SHEETS						
SHEET NUMBER	1	2	3	4	5	6
	–	–	–	–		

APPLICATION	
NEXT ASSY	USED ON
8287519	8287500

MATERIAL:
ITEM 4, 5, 6, & 8
STEEL ASTM A36
ITEM 2 & 3
STEEL ASTM A572
GRADE 50
ITEM 4
STEEL ASTM A588
ITEM 7
CRES ASTM 240
GRADE 316L

DO NOT SCALE THIS DRAWING

INTERPRET DRAWING IN ACCORDANCE WITH STANDARDS PRESCRIBED IN ASME Y14.100

BREAK ALL SHARP EDGES

SURFACE FINISH √ 250/

FILLETS & ROUNDS .XX± .02

BEND RADII .XXX± .XXX±

UNLESS OTHERWISE SPECIFIED: ALL DIMENSIONS ARE IN INCHES TOLERANCES: ANGLES± FRACTIONS± DECIMALS

PREPARED	ANSEC	06-07
CHECKED		
TECH LEAD		
BR HD		

ACCEPTED BY	NAVSEA	(SIGNATURE DOES NOT DENOTE APPROVAL)
APPROVED FOR	NAVSEA	(SIGN ONLY IF ENGINEERING HAS BEEN "RELEASED" BY NAVSURFWAR CENTER)

PORT HUENEME DIVISION
NAVAL SURFACE WARFARE CENTER
4363 MISSILE WAY
PORT HUENEME, CA 93043-4307

DEPARTMENT OF THE NAVY
NAVAL SEA SYSTEMS COMMAND
WASHINGTON,D.C. 20376-5160

HEAVY UNREP-NAVY STANDARD
RAM TENSIONER

UPPER SHEAVE HOUSING WELDMENT

SIZE	CAGE CODE	DWG. NO.	REV
F	53711	8287520	–

SCALE 1/4 | UNIT WT 1700 LBS | SHEET 1 OF 4

PARTS LIST

PART OR IDENTIFING NO.	QTY REQD	CODE IDENT NO.	DRAWING OR SPECIFICATION	NOMENCLATURE OR DESCRIPTION	REMARKS
1	1	53711	8287521	MOUNTING PLATE	
2	3	–	–	PLATE	
3	2	–	–	PLATE	
4	2	–	–	PLATE	
5	1	–	–	PLATE	
6	1	–	–	PLATE	
7	6	–	–	PLATE	
8	6	–	–	FLAT BAR	
9	2	–	–	PLATE	

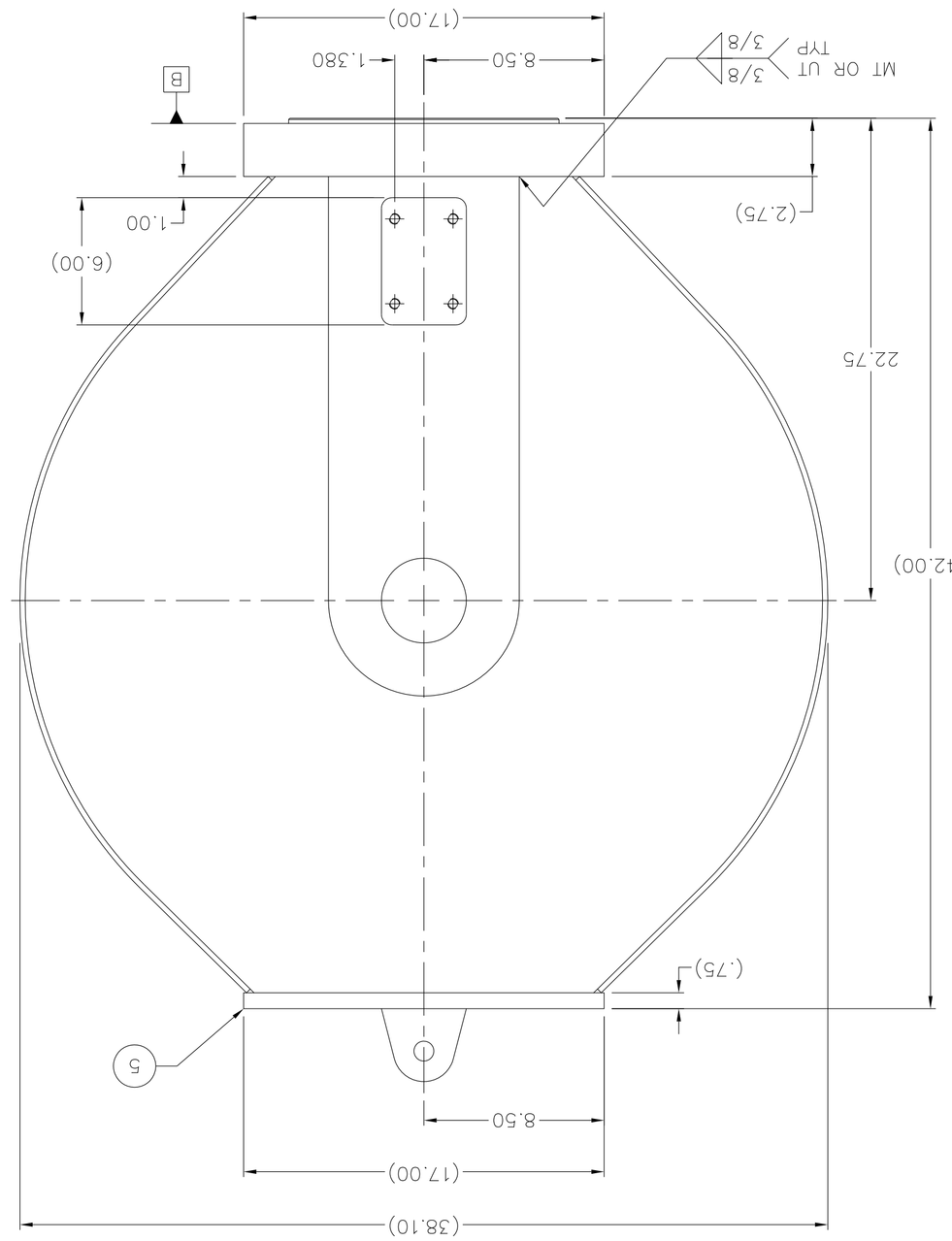

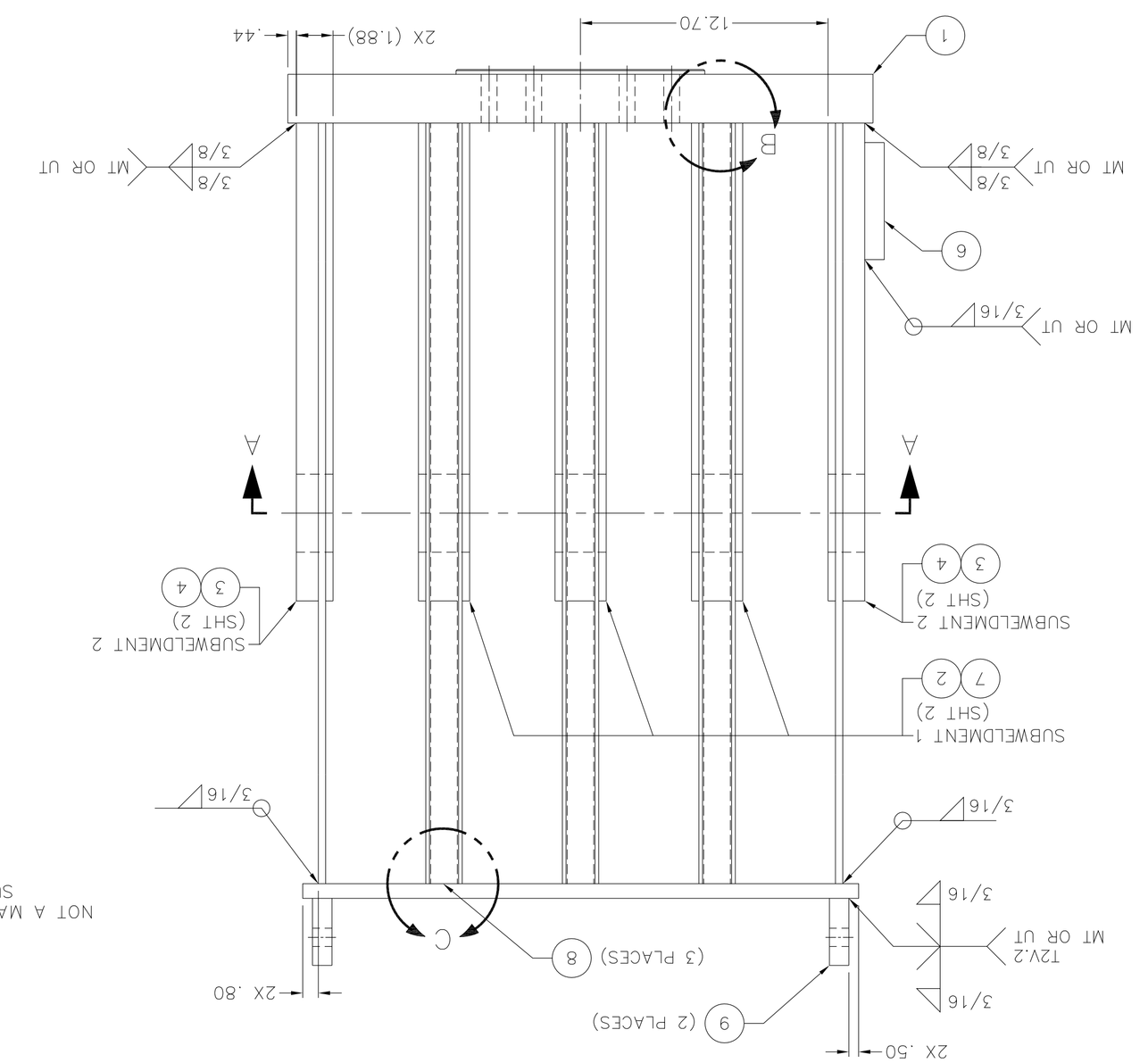

SECTION A–A

DETAIL B
TYP 3 PLACES
SCALE: 1/2

DETAIL C
TYP 3 PLACES
SCALE: 1/2

NOTES:

1. WELDING REQUIREMENTS:
   - 1.1 FABRICATION, WELDING, STRESS RELIEF AND INSPECTION SHALL BE IN ACCORDANCE WITH NAVSEA S9074-AR-GIB-010/278 AND T9074-AS-GIB-010/271, CLASS M-2. WELDS ON THIS DRAWING CLASSIFIED AS CATEGORY A REQUIRE EITHER MAGNETIC PARTICLE (MT) OR ULTRASONIC (UT) INSPECTION, AS INDICATED ALL OTHER WELDS ARE CATEGORY C AND REQUIRE VISUAL INSPECTION.
   - 1.2 WELD INSPECTION STARTS AT ROOT WELD IAW TECHNICAL PUBLICATIONS LISTED IN 1.1 ABOVE.
   - 1.3 UNLESS OTHERWISE SPECIFIED ON THIS DRAWING, ALL DIMENSIONS AND TOLERANCES REFER TO FINISHED PRODUCT.
2. DIMENSIONS PROVIDED IN REMARKS COLUMN OF PARTS LIST ARE REFERENCE ONLY UNLESS THERE IS NO DETAILED VIEW WHICH SPECIFIES REQUIRED DIMENSIONS.
3. WELDMENT MAY BE STRAIGHTENED IF REQUIRED TO MEET DIMENSIONAL REQUIREMENTS ON THE FACE OF DRAWING.
4. STOCK SIZE IN REMARKS COLUMN OF PARTS LIST IS NOMINAL WITHOUT MANUFACTURING ALLOWANCE.

REVISIONS			
ZONE	LTR	DESCRIPTION	DATE	APPROVED

8287520

NSMC 4120/7A (REV. 03-92)

SUBWELDMENT 1
QTY 3 REQUIRED

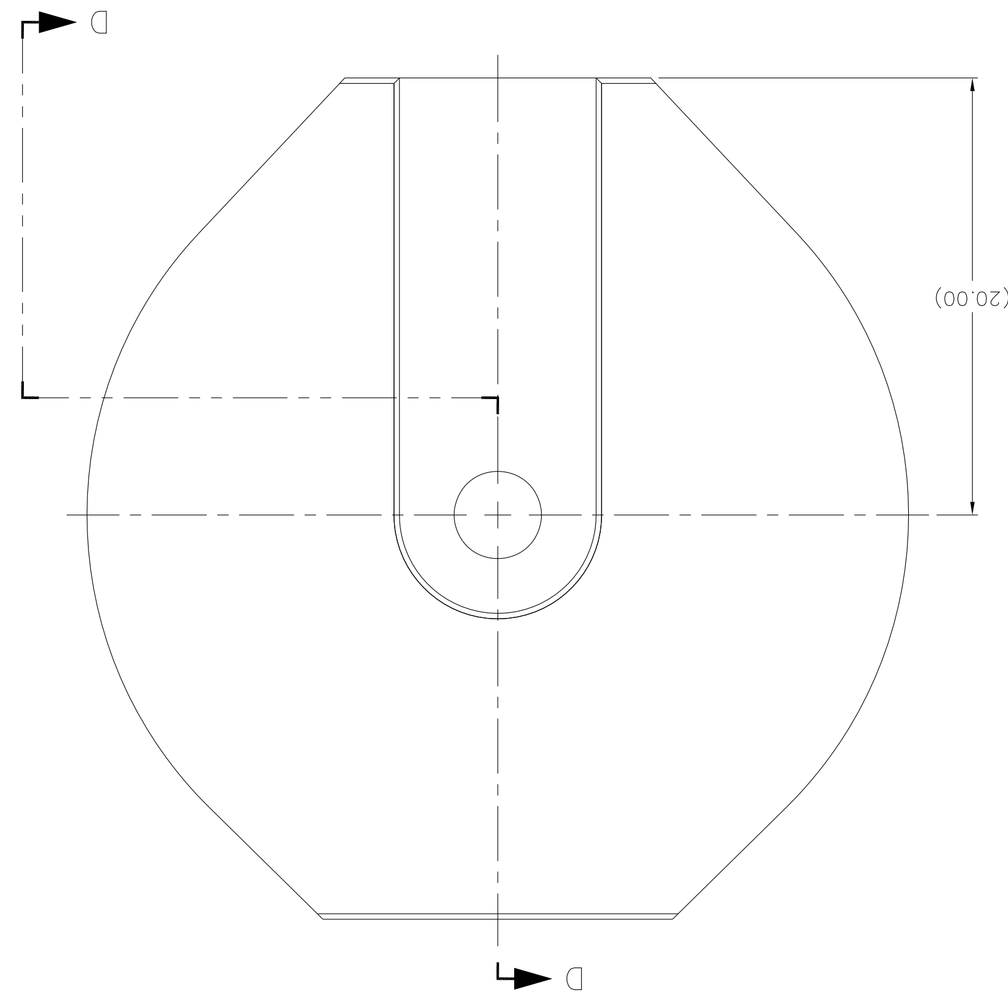

SECTION D–D

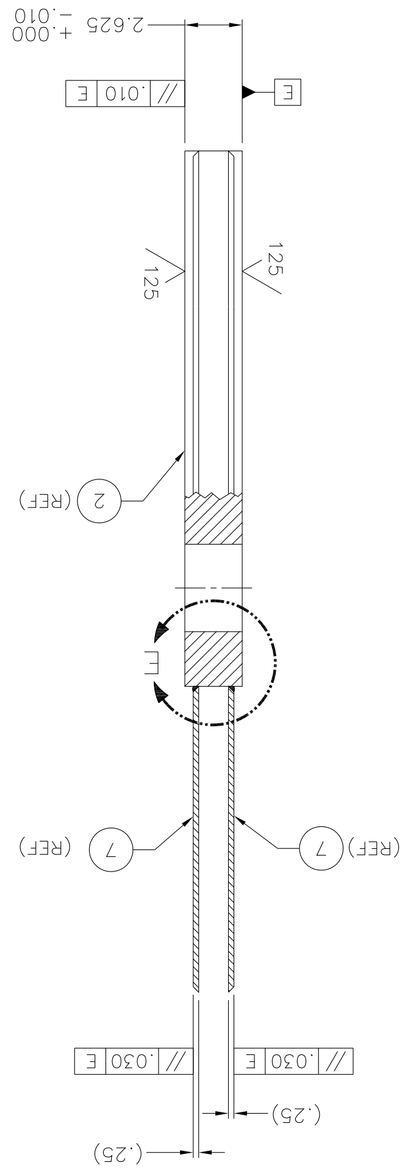

SUBWELDMENT 2
QTY 2 REQUIRED

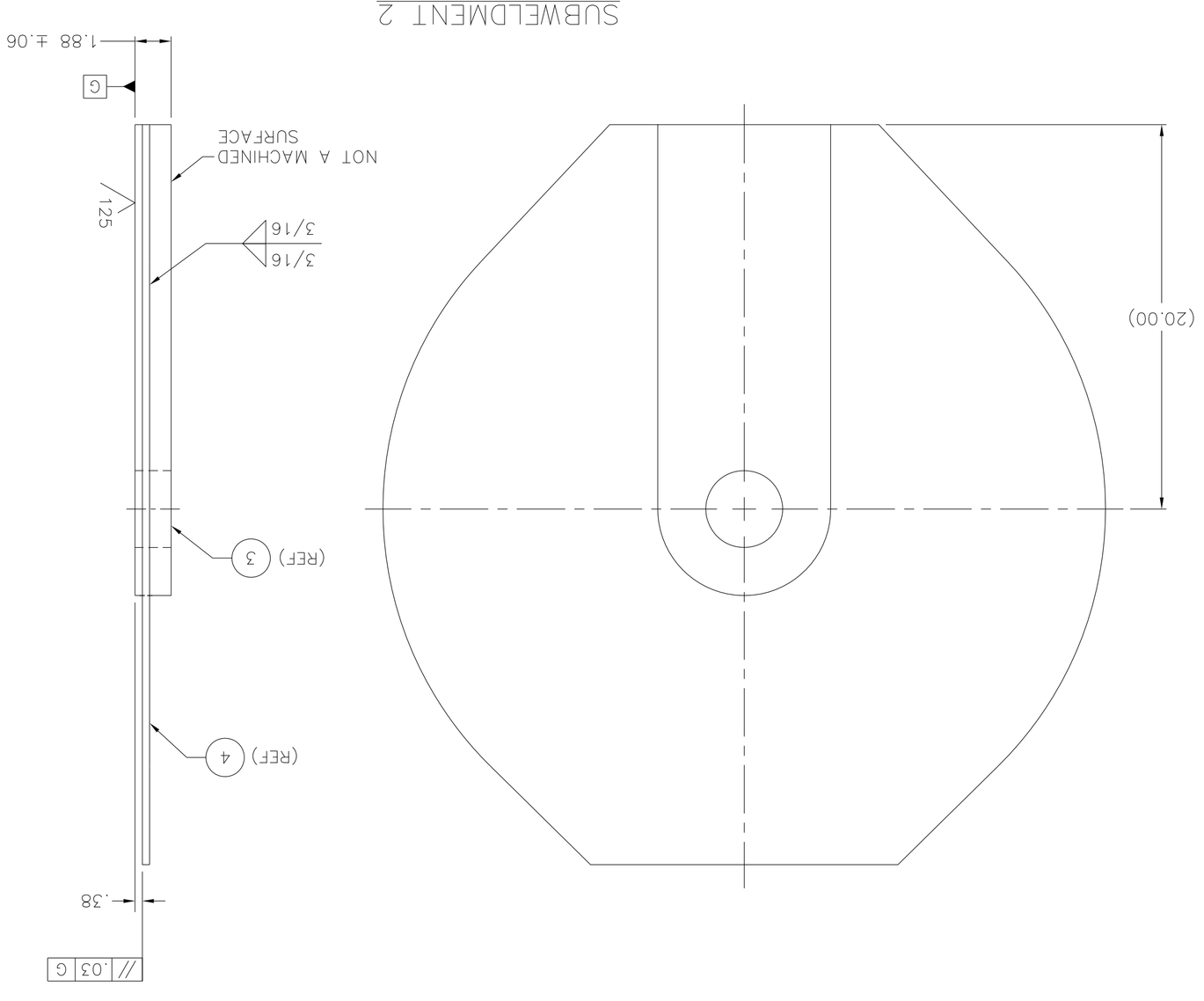

DETAIL E
SCALE: 1/2

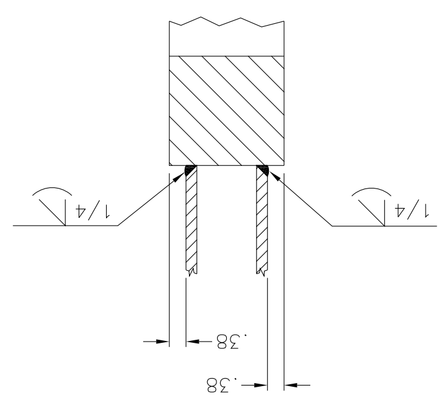

REVISIONS			
ZONE	LTR	DESCRIPTION	DATE	APPROVED

SIZE	CAGE CODE	NAVSEA DWG. NO.	REV
F	53711	8287520	—

SCALE 1/4 | UNIT WT ——— | SHEET 2

8287520

NSWC 4120/7A (REV. 03-92)

SECTION F–F

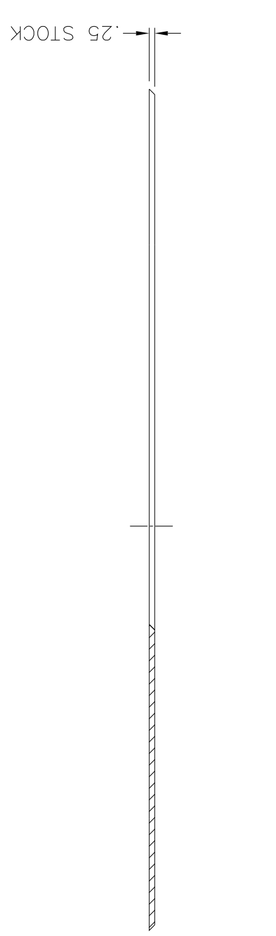

DETAIL OF PC 7
QTY 6 REQUIRED

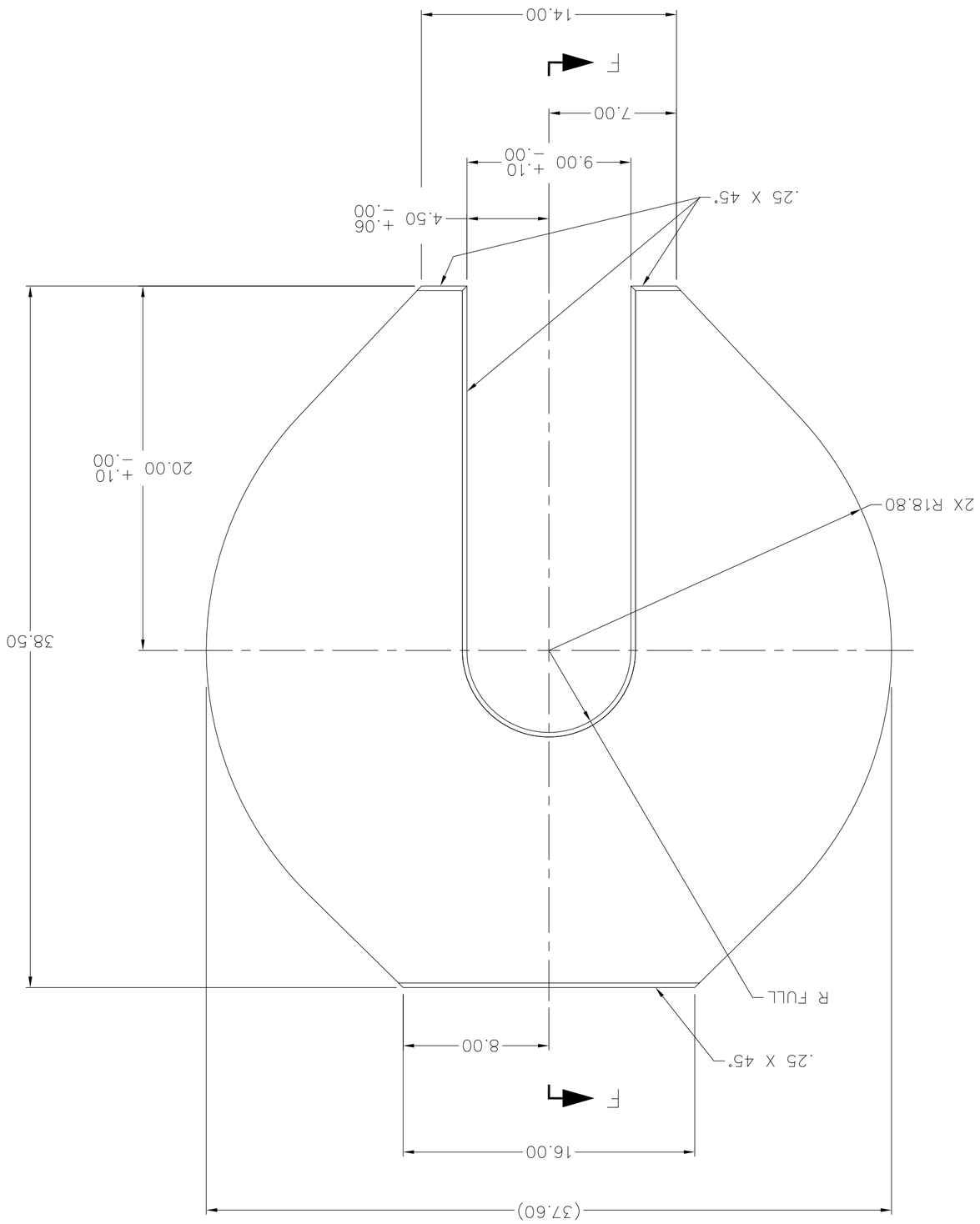

DETAIL OF PC 4
QTY 2 REQUIRED

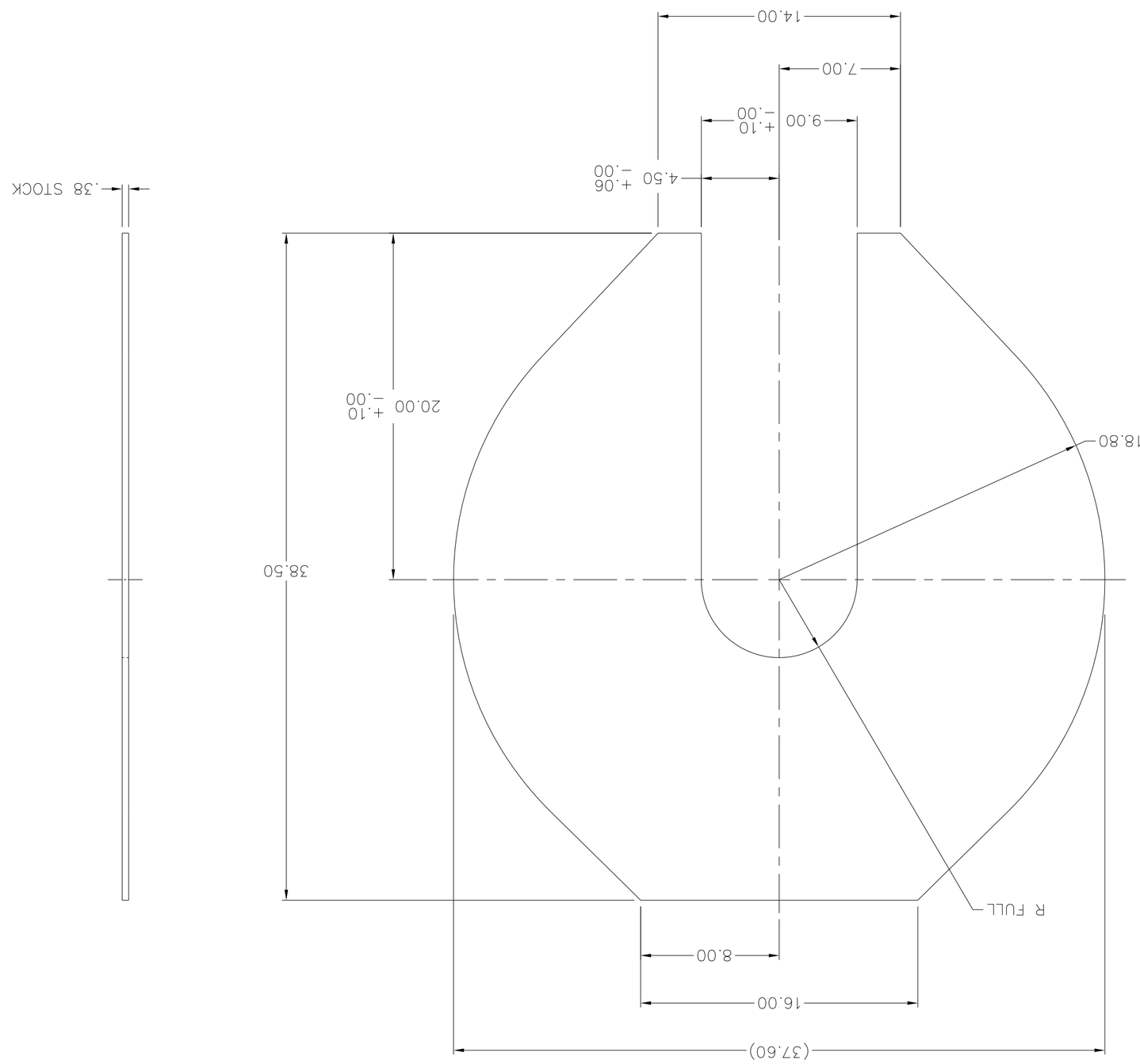

8287520

SIZE	CAGE CODE	NAVSEA DWG. NO.	REV
F	53711	8287520	—

SCALE 1/4 | UNIT WT ——— | SHEET 3

REVISIONS				
ZONE	LTR	DESCRIPTION	DATE	APPROVED

REVISIONS				
ZONE	LTR	DESCRIPTION	DATE	APPROVED

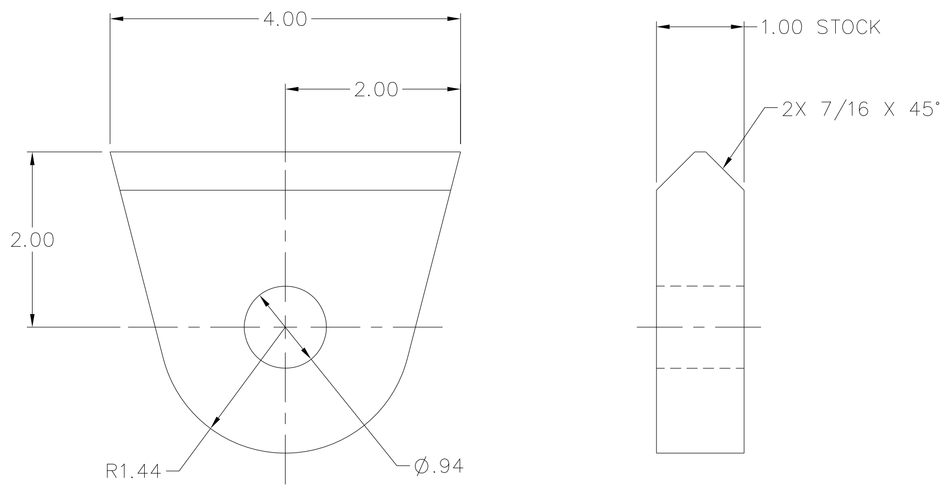

DETAIL OF PC 9
QTY 2 REQUIRED
SCALE: 1/1

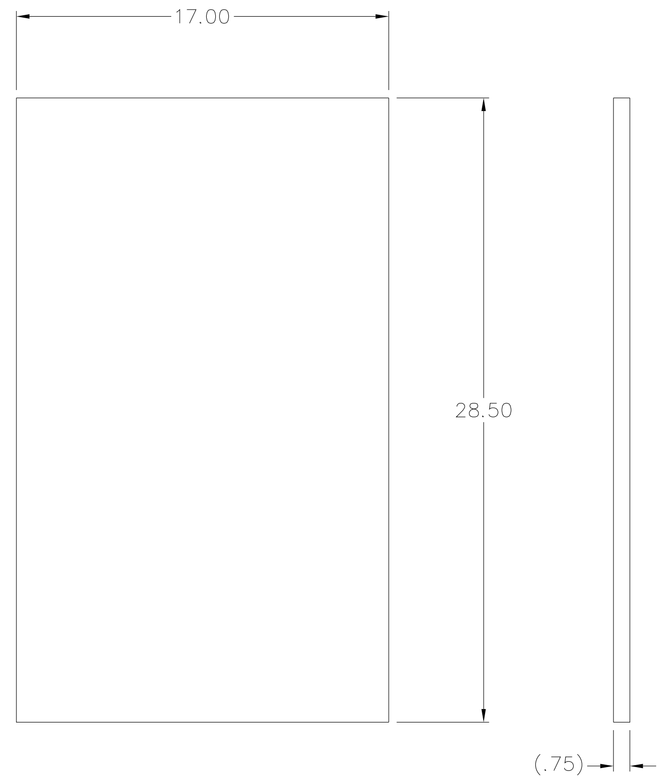

DETAIL OF PC 5
QTY 1 REQUIRED

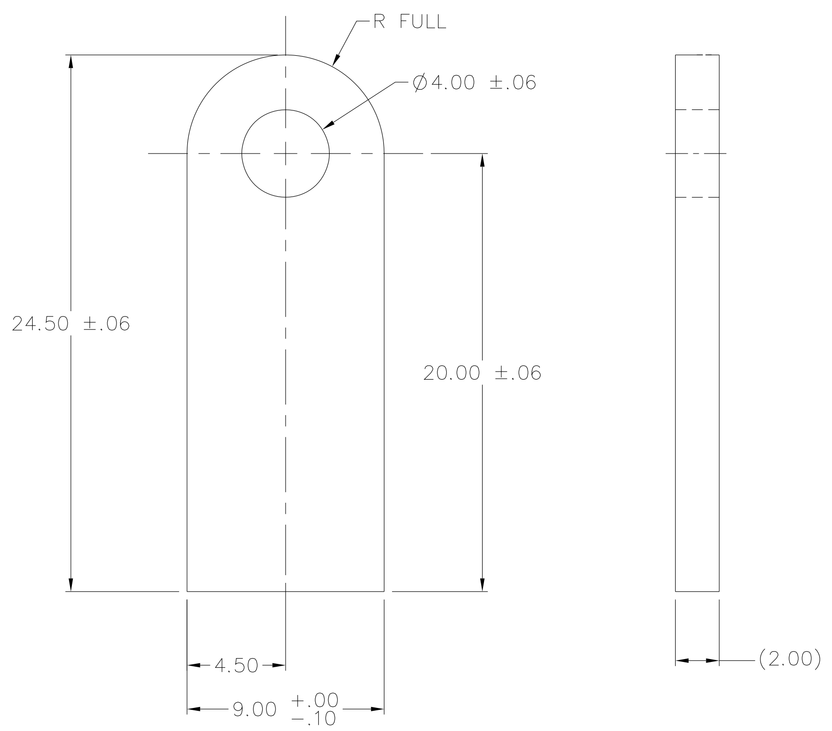

DETAIL OF PC 3
QTY 2 REQUIRED

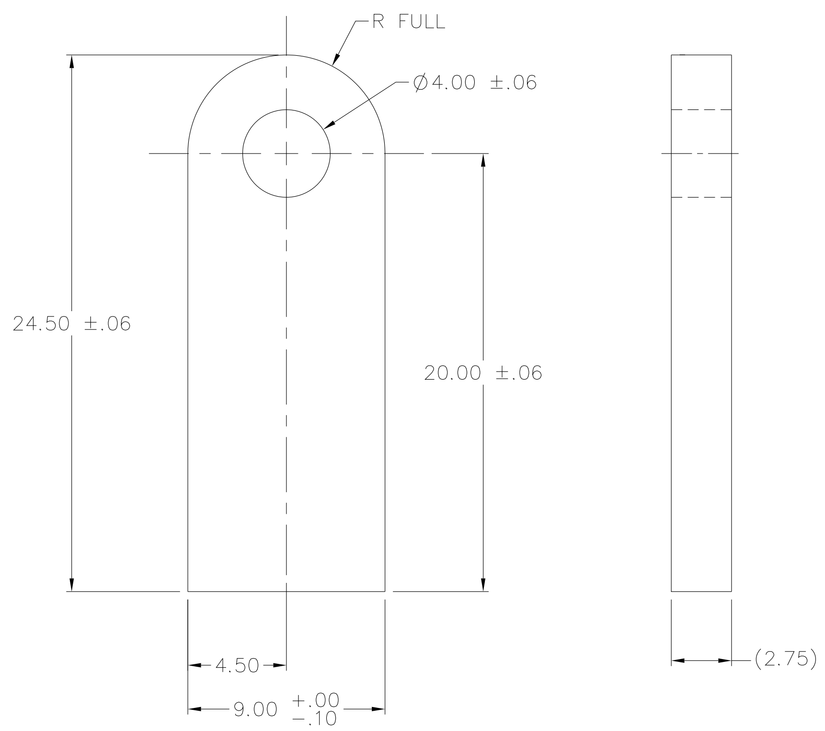

DETAIL OF PC 2
QTY 3 REQUIRED

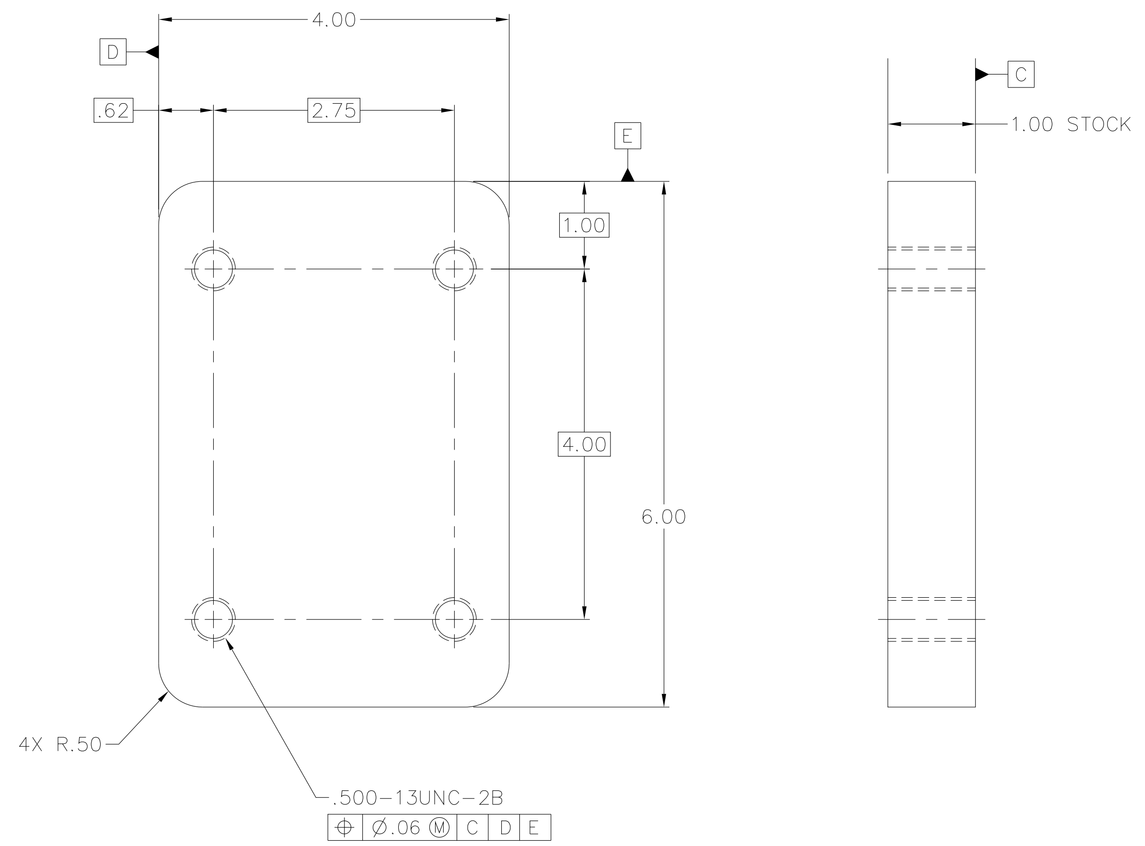

DETAIL OF PC 6
QTY 1 REQUIRED
SCALE: 1/1

SIZE	CAGE CODE	NAVSEA DWG. NO.	REV
F	53711	8287520	–
SCALE 1/4	UNIT WT ———	SHEET 4	

8287520

NSWC 4120/1A (REV. 03-92)

REVISIONS				
ZONE	LTR	DESCRIPTION	DATE	APPROVED

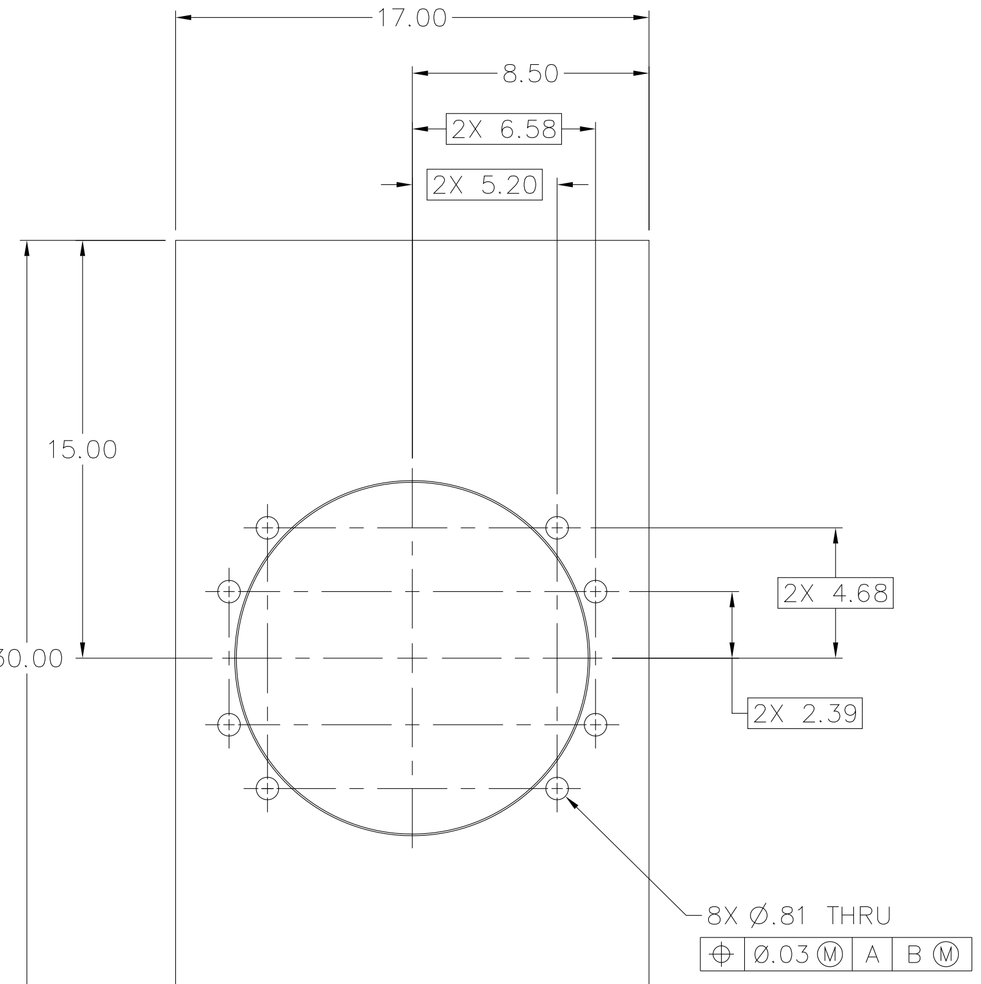

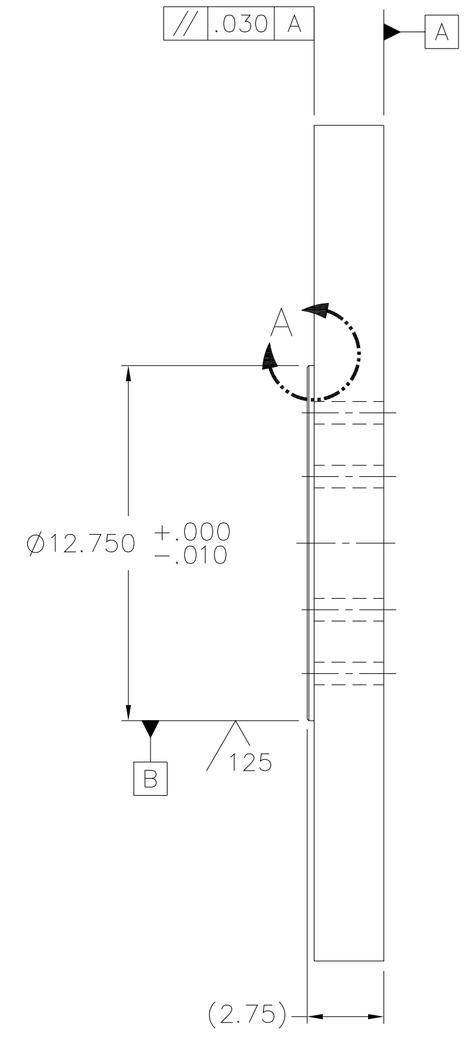

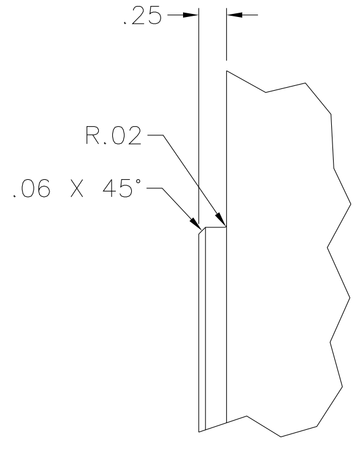

DETAIL A
SCALE: 1/1

8287521

NOTICE OF CONFIGURATION CONTROL

THIS DRAWING DEFINES AN ITEM OF UNDERWAY REPLENISHMENT (UNREP) STANDARD HARDWARE. NO REVISION TO THIS DRAWING OR THE HARDWARE REPRESENTED BY IT IS AUTHORIZED WITHOUT THE WRITTEN APPROVAL OF THE NAVAL SEA SYSTEMS COMMAND.

DISTRIBUTION STATEMENT C: DISTRIBUTION AUTHORIZED TO U.S. GOVERNMENT AGENCIES AND THEIR CONTRACTORS: OTHER REQUESTS MUST BE REFERRED TO COMNAVSEA OR THE COGNIZANT NAVSEA CODE.

WARNING: THIS DOCUMENT CONTAINS TECHNICAL DATA WHOSE EXPORT IS RESTRICTED BY THE ARMS EXPORT CONTROL ACT (TITLE 22, U.S.C. SEC. 2751 ET SEQ.) OR EXECUTIVE ORDER 12470. VIOLATIONS OF THESE EXPORT LAWS ARE SUBJECT TO SEVERE CRIMINAL PENALTIES.

DESTRUCTION NOTICE: DESTROY BY ANY METHOD THAT WILL PREVENT DISCLOSURE OF CONTENTS OR RECONSTRUCTION OF THE DOCUMENT.

APPLICATION	
NEXT ASSY	USED ON
8287520	8287500

MATERIAL:
STEEL
PER ASTM A36
OR
LOW ALLOY HIGH
STRENGTH STEEL
PER ASTM A572
OR ASTM A588
GRADE B

UNLESS OTHERWISE SPECIFIED:
ALL DIMENSIONS ARE IN INCHES
TOLERANCES: ANGLES± .5°
FRACTIONS±
DECIMALS
.XX± .02
.XXX± .005
BEND RADII
FILLETS & ROUNDS 250/
SURFACE FINISH
BREAK ALL SHARP EDGES
INTERPRET DRAWING IN ACCORDANCE WITH STANDARDS PRESCRIBED IN ASME Y14.100
DO NOT SCALE THIS DRAWING

PORT HUENEME DIVISION
NAVAL SURFACE WARFARE CENTER
4363 MISSILE WAY
PORT HUENEME, CA 93043-4307

PREPARED	AMSEC	06-07
CHECKED		
TECH LEAD		
BR HD		
ACCEPTED BY NAVSEA	(SIGNATURE DOES NOT DENOTE APPROVAL)	
APPROVED FOR NAVSEA	(SIGN ONLY IF ENGINEERING HAS BEEN "PROVED" BY MANUFACTURE AND TEST)	

DEPARTMENT OF THE NAVY
NAVAL SEA SYSTEMS COMMAND
WASHINGTON, D.C. 20376-5160

HEAVY UNREP-NAVY STANDARD
RAM TENSIONER

UPPER HOUSING MOUNTING PLATE

SIZE	CAGE CODE	NAVSEA DWG NO.	REV
D	53711	8287521	—

SCALE 1/4 | UNIT WT 364 LBS | SHEET 1 OF 1

PART OR IDENTIFYING NO.	QTY REQD	CODE IDENT NO.	DRAWING OR SPECIFICATION	NOMENCLATURE OR DESCRIPTION	REMARKS

PARTS LIST

NSWC 4120/8 (REV 03-92)

NOTES:

1. HEAT TREAT IN ACCORDANCE WITH SAE-AMS-H-6875, CLASS A, TO BHN 285-294 (YIELD STRENGTH 138,000-141,000 PSI).

2. SHAFT SHALL BE ELECTROLESS NICKEL COATED PER SAE-AMS-C-26074, CLASS 2, GRADE A, .0005-.0015 THICK.

REVISIONS				
ZONE	LTR	DESCRIPTION	DATE	APPROVED

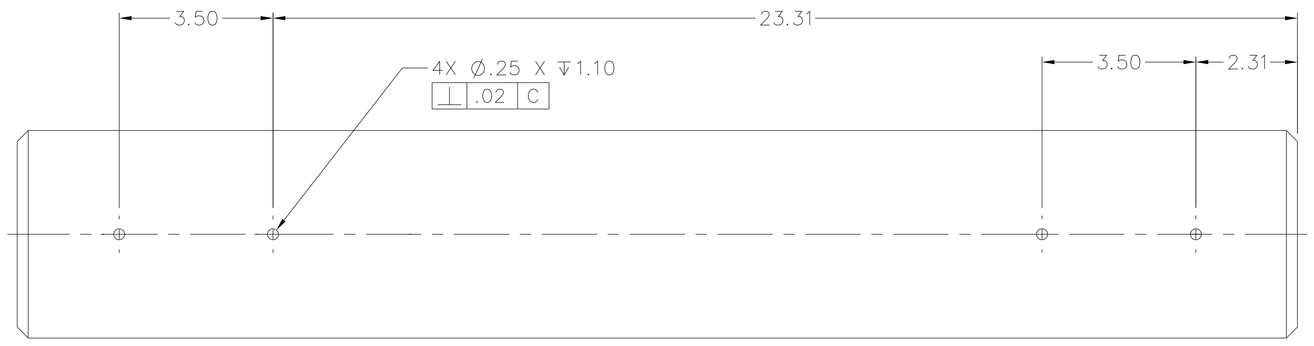

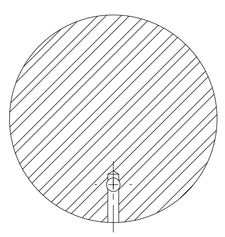

SECTION B-B
(4 PLACES)

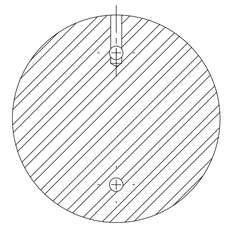

SECTION A-A
(4 PLACES)

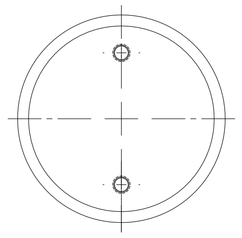

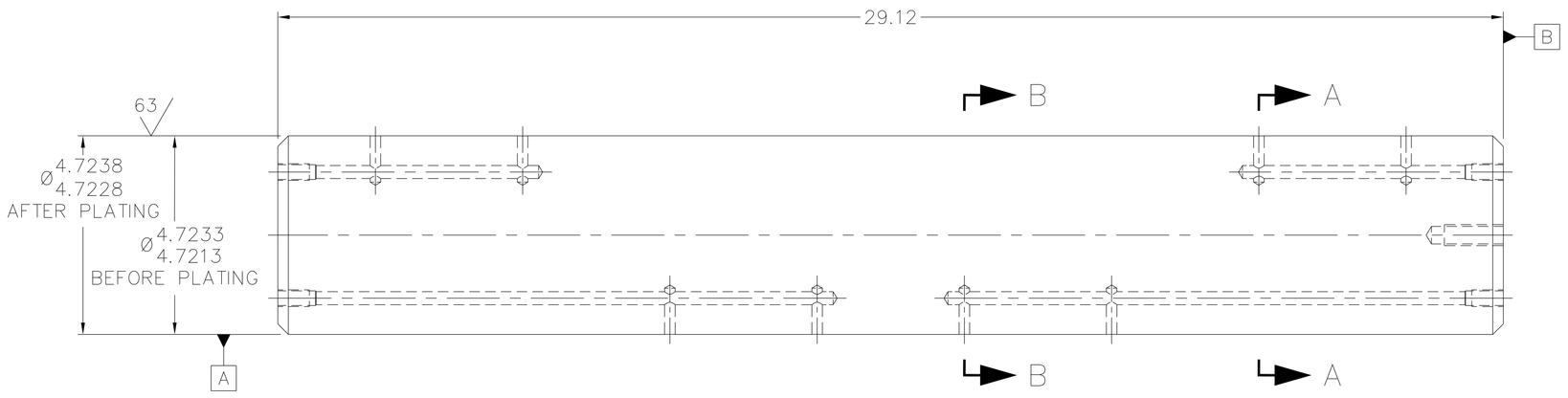

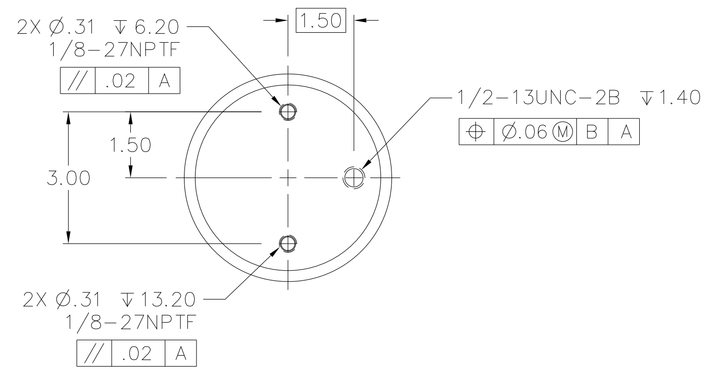

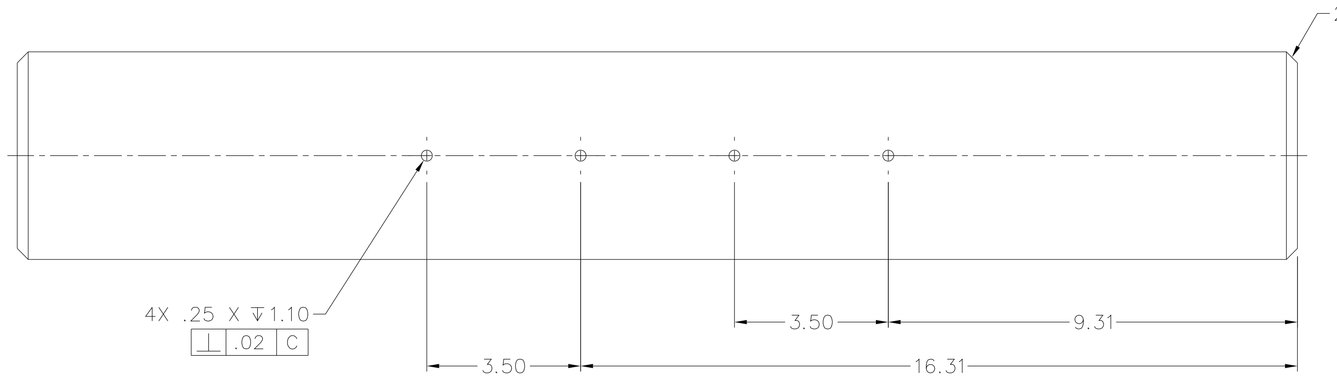

8287522

PART OR IDENTIFYING NO.	QTY REQD	CODE IDENT NO.	DRAWING OR SPECIFICATION	NOMENCLATURE OR DESCRIPTION	REMARKS

PARTS LIST

NOTICE OF CONFIGURATION CONTROL

THIS DRAWING DEFINES AN ITEM OF UNDERWAY REPLENISHMENT (UNREP) STANDARD HARDWARE. NO REVISION TO THIS DRAWING OR THE HARDWARE REPRESENTED BY IT IS AUTHORIZED WITHOUT THE WRITTEN APPROVAL OF THE NAVAL SEA SYSTEMS COMMAND.

DISTRIBUTION STATEMENT C: DISTRIBUTION AUTHORIZED TO U.S. GOVERNMENT AGENCIES AND THEIR CONTRACTORS: OTHER REQUESTS MUST BE REFERRED TO COMNAVSEA OR THE COGNIZANT NAVSEA CODE.

WARNING: THIS DOCUMENT CONTAINS TECHNICAL DATA WHOSE EXPORT IS RESTRICTED BY THE ARMS EXPORT CONTROL ACT (TITLE 22, U.S.C. SEC. 2751 ET SEQ.) OR EXECUTIVE ORDER 12470. VIOLATIONS OF THESE EXPORT LAWS ARE SUBJECT TO SEVERE CRIMINAL PENALTIES.

DESTRUCTION NOTICE: DESTROY BY ANY METHOD THAT WILL PREVENT DISCLOSURE OF CONTENTS OR RECONSTRUCTION OF THE DOCUMENT.

APPLICATION	
NEXT ASSY	USED ON
8287503	8287500

MATERIAL:
ALLOY STEEL
PER ASTM A322
UNS NO G41400

UNLESS OTHERWISE SPECIFIED:
ALL DIMENSIONS ARE IN INCHES
TOLERANCES: ANGLES± .5°
FRACTIONS± .125
DECIMALS
.XX± .02
.XXX± .005
BEND RADII
FILLETS & ROUNDS .125
SURFACE FINISH √
BREAK ALL SHARP EDGES
INTERPRET DRAWING IN ACCORDANCE WITH STANDARDS PRESCRIBED IN ASME Y14.100
DO NOT SCALE THIS DRAWING

PORT HUENEME DIVISION
NAVAL SURFACE WARFARE CENTER
4363 MISSILE WAY
PORT HUENEME, CA 93043-4307

PREPARED	AMSEC	06-07
CHECKED		
TECH LEAD		
BR HD		
ACCEPTED BY NAVSEA		(SIGNATURE DOES NOT DENOTE APPROVAL)
APPROVED FOR NAVSEA		(SIGN ONLY IF ENGINEERING HAS BEEN "PROVED" BY MANUFACTURE AND TEST)

DEPARTMENT OF THE NAVY
NAVAL SEA SYSTEMS COMMAND
WASHINGTON,D.C. 20376-5160

HEAVY UNREP-NAVY STANDARD
RAM TENSIONER

UPPER SHEAVE SHAFT

SIZE	CAGE CODE	NAVSEA DWG. NO.	REV
F	53711	8287522	–

SCALE 1/2 | UNIT WT 144.0 LBS | SHEET 1 OF 1

NSWC 4120/1A (REV. 03-92)

NOTES:

1. STOCK SIZE IN REMARKS COLUMN OF PARTS LIST IS NONIMAL WITHOUT MANUFACTURING ALLOWANCE.

2. WELDING REQUIREMENTS:

2.1 FABRICATION, WELDING, STRESS RELIEF AND INSPECTION SHALL BE IN ACCORDANCE WITH NAVSEA S9074-AR-GIB-010/278 AND T9074-AS-GIB-010/271, CLASS M-2, CATEGORY C AND REQUIRE VISUAL INSPECTION ONLY.

2.2 UNLESS OTHERWISE SPECIFIED ON THIS DRAWING, ALL DIMENSIONS AND TOLERANCES REFER TO PRODUCT BEFORE PAINTING.

3. WELDMENT MAY BE STRAIGHTENED IF REQUIRED TO MEET DIMENSIONAL REQUIREMENTS ON THE FACE OF DRAWING.

4. PAINT ALL SURFACES USING PROCEDURES AND MATERIALS SPECIFIED IN PC 8 USING SPECIAL PROCEDURE FOR RAM TENSIONERS.

REVISIONS

ZONE	LTR	DESCRIPTION	DATE	APPROVED

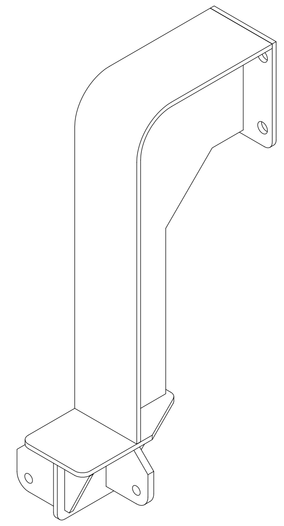

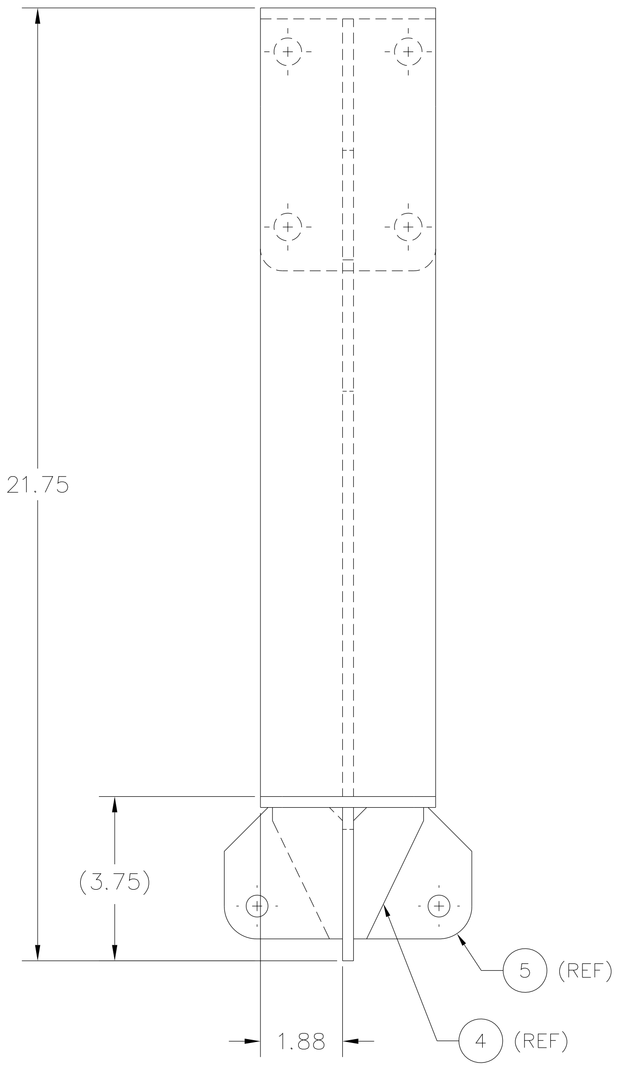

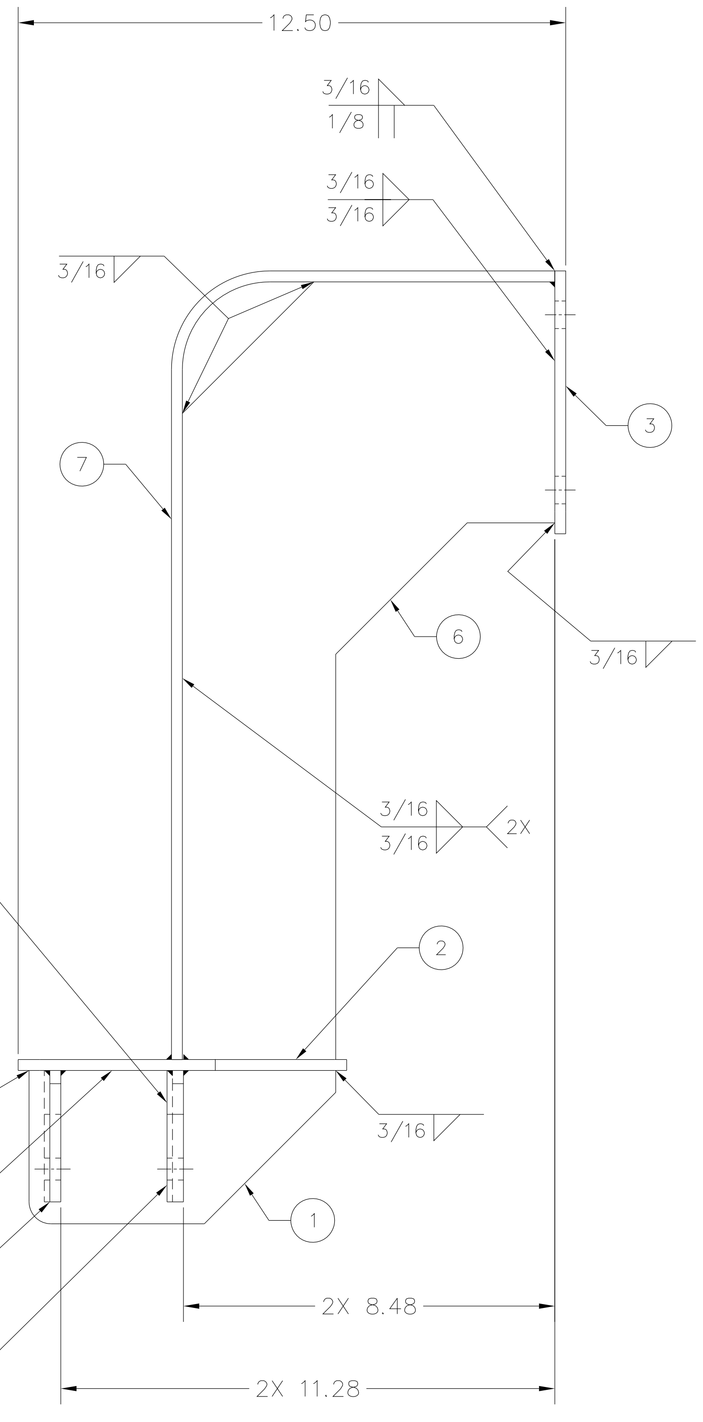

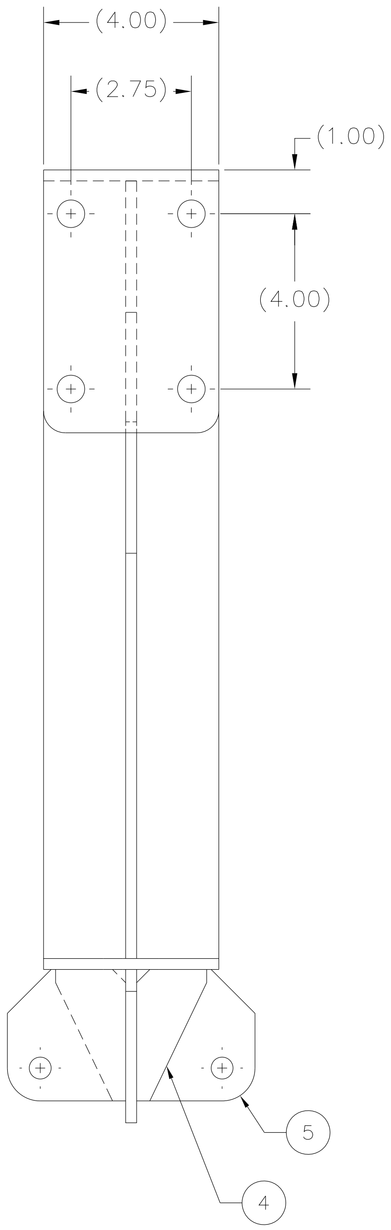

PART OR IDENTIFYING NO.	QTY REQD	CODE IDENT NO.	DRAWING OR SPECIFICATION	NOMENCLATURE OR DESCRIPTION	REMARKS
8	AR	53711	5210545	STD PAINT PROCEDURE-UNREP	SEE NOTE 4
7	1	–	–	PLATE	1/4 X 4 X 26
6	1	–	–	PLATE	1/4 X 8 1/2 X 17 3/4
5	2	–	–	PLATE	3/8 X 2 3/4 X 3
4	2	–	–	PLATE	1/4 X 1 5/8 X 3
3	1	–	–	PLATE	1/4 X 4 X 6
2	1	–	–	PLATE	1/4 X 4 X 7 1/2
1	1	–	–	PLATE	1/4 X 3 1/2 X 7

PARTS LIST

NOTICE OF CONFIGURATION CONTROL

THIS DRAWING DEFINES AN ITEM OF UNDERWAY REPLENISHMENT (UNREP) STANDARD HARDWARE. NO REVISION TO THIS DRAWING OR THE HARDWARE REPRESENTED BY IT IS AUTHORIZED WITHOUT THE WRITTEN APPROVAL OF THE NAVAL SEA SYSTEMS COMMAND.

DISTRIBUTION STATEMENT C: DISTRIBUTION AUTHORIZED TO U.S. GOVERNMENT AGENCIES AND THEIR CONTRACTORS: OTHER REQUESTS MUST BE REFERRED TO COMNAVSEA OR THE COGNIZANT NAVSEA CODE.

WARNING: THIS DOCUMENT CONTAINS TECHNICAL DATA WHOSE EXPORT IS RESTRICTED BY THE ARMS EXPORT CONTROL ACT (TITLE 22, U.S.C. SEC. 2751 ET SEQ.) OR EXECUTIVE ORDER 12470. VIOLATIONS OF THESE EXPORT LAWS ARE SUBJECT TO SEVERE CRIMINAL PENALTIES.

DESTRUCTION NOTICE: DESTROY BY ANY METHOD THAT WILL PREVENT DISCLOSURE OF CONTENTS OR RECONSTRUCTION OF THE DOCUMENT.

6	5	4	3	2	1
				–	–

SHEET NUMBER

REVISION STATUS OF SHEETS

APPLICATION	
NEXT ASSY	USED ON
8287503	8287500

MATERIAL:
CRES ASTM 240
GRADE 316L

UNLESS OTHERWISE SPECIFIED:
ALL DIMENSIONS ARE IN INCHES
TOLERANCES: ANGLES± .5°
FRACTIONS±
DECIMALS
.XX± .06
.XXX±
BEND RADII
FILLETS & ROUNDS 250/
SURFACE FINISH √
BREAK ALL SHARP EDGES
INTERPRET DRAWING IN ACCORDANCE WITH STANDARDS PRESCRIBED IN ASME Y14.100
DO NOT SCALE THIS DRAWING

PORT HUENEME DIVISION
NAVAL SURFACE WARFARE CENTER
4363 MISSILE WAY
PORT HUENEME, CA 93043-4307

PREPARED	AMSEC	06-07
CHECKED		
TECH LEAD		
BR HD		
ACCEPTED BY NAVSEA		(SIGNATURE DOES NOT DENOTE APPROVAL)
APPROVED FOR NAVSEA		(SIGN ONLY IF ENGINEERING HAS BEEN "PROVED" BY MANUFACTURE AND TEST)

DEPARTMENT OF THE NAVY
NAVAL SEA SYSTEMS COMMAND
WASHINGTON,D.C. 20376-5160

HEAVY UNREP-NAVY STANDARD
RAM TENSIONER

UPPER SHEAVE CABLE BRACKET

SIZE	CAGE CODE	NAVSEA DWG. NO.	REV
F	53711	8287523	–

SCALE 1/2 | UNIT WT 21.5 LBS | SHEET 1 OF 2

8287523 –

NSWC 4120/1A (REV. 03-92)

REVISIONS				
ZONE	LTR	DESCRIPTION	DATE	APPROVED

DETAIL OF PC 7

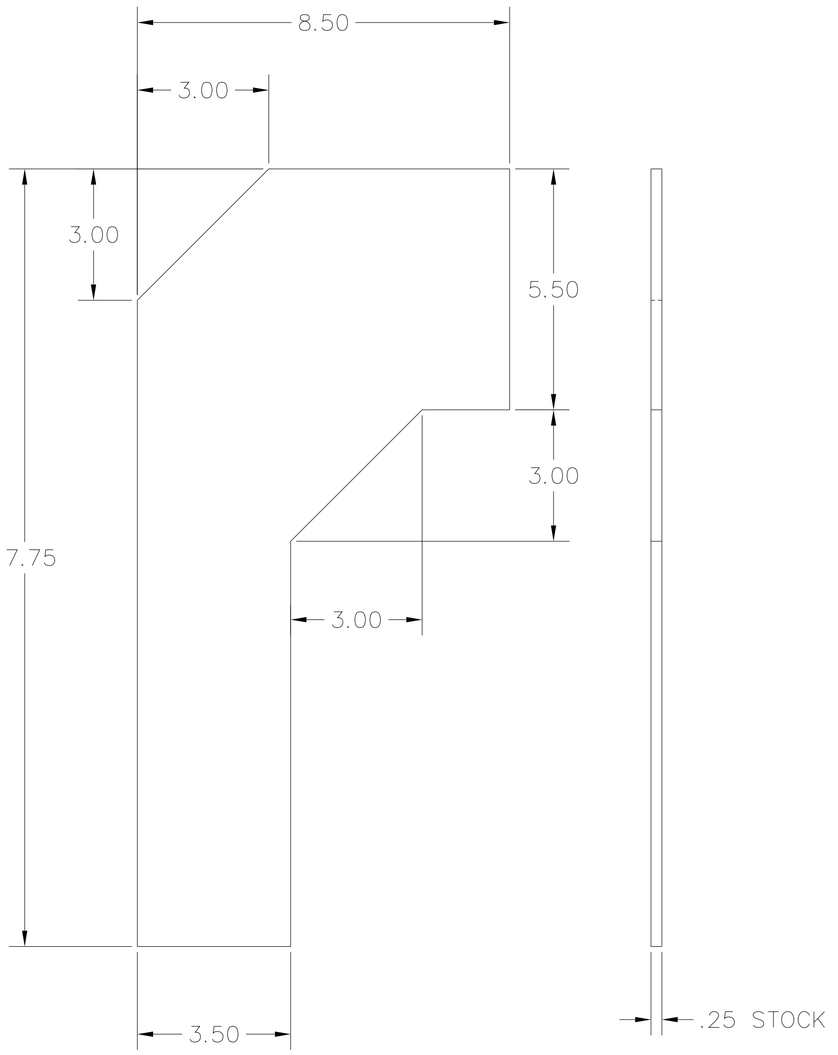

DETAIL OF PC 6

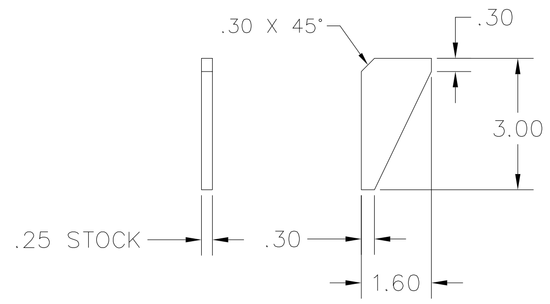

DETAIL OF PC 4

QTY 2 REQUIRED

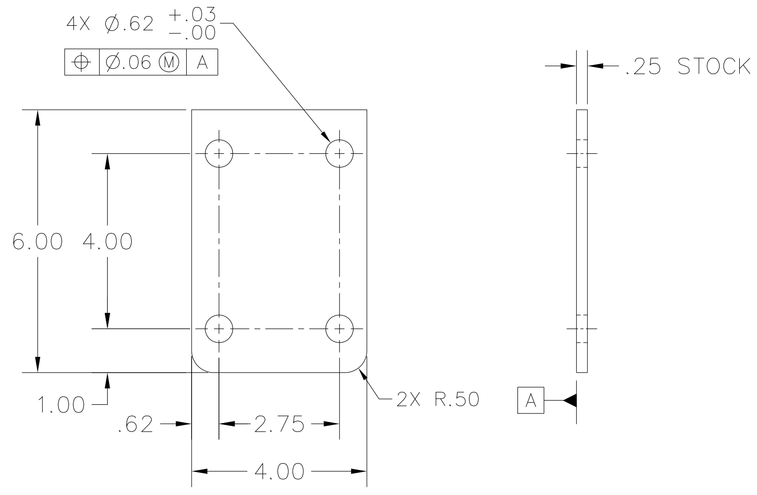

DETAIL OF PC 3

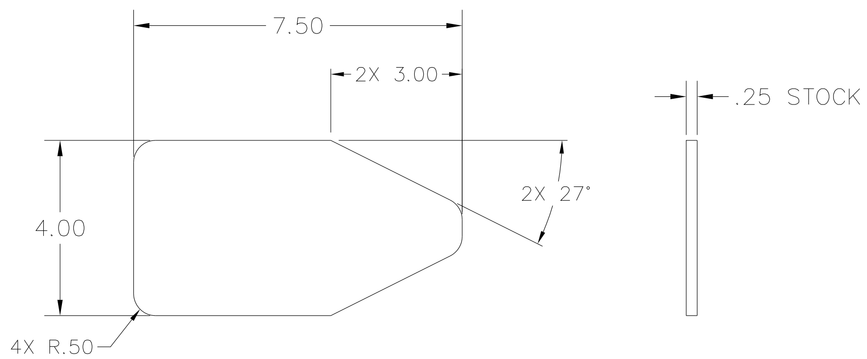

DETAIL OF PC 2

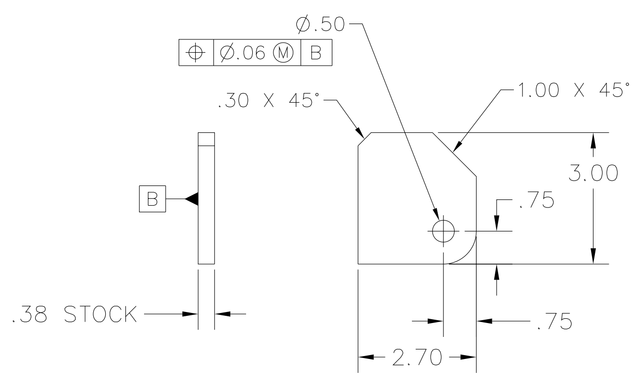

DETAIL OF PC 5

QTY 2 REQUIRED

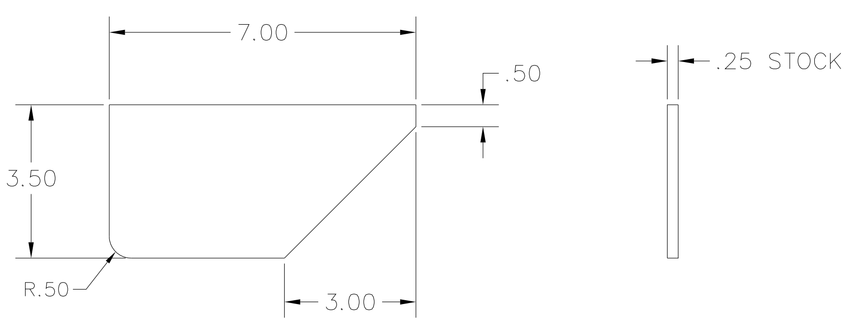

DETAIL OF PC 1

SIZE	CAGE CODE	NAVSEA DWG. NO.	REV
F	53711	8287523	—
SCALE 1/2	UNIT WT ———	SHEET 2	

8287523

NSWC 4120/1A (REV. 03-92)

NOTES:

1. ANODIZE AFTER FINAL MACHINING IN ACCORDANCE WITH MIL-A-8625, TYPE I.
2. DRILL AND THREAD FOR HELICAL COIL INSERT PER NASM33537, TO A DEPTH OF .81 INCHES WITH A TOLERANCE OF +.06/-.00 INCHES.
3. HELICAL COILS INSERTS, PC 2, SHALL BE INSTALLED .06 INCH BELOW SURFACE.

REVISIONS				
ZONE	LTR	DESCRIPTION	DATE	APPROVED

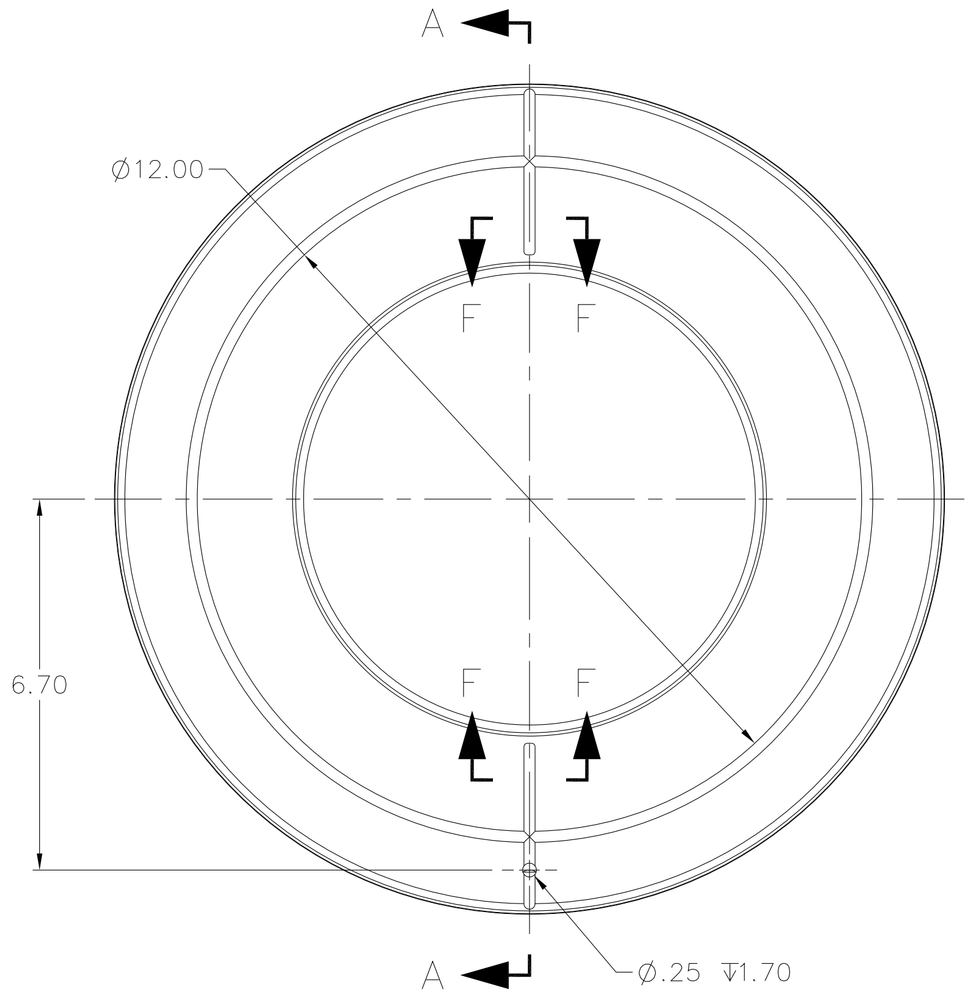

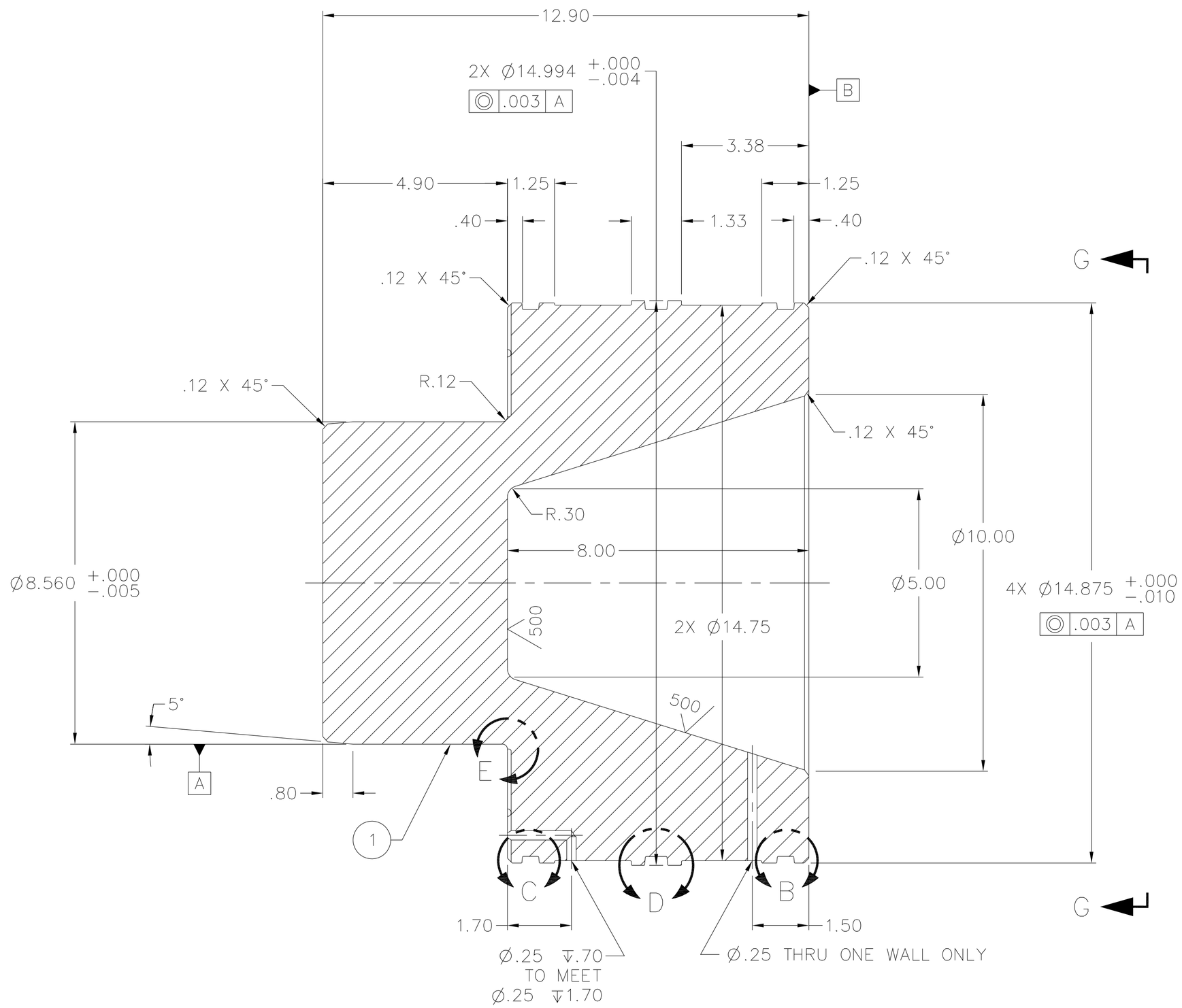

SECTION A-A

PART OR IDENTIFYING NO.	QTY REQD	CODE IDENT NO.	DRAWING OR SPECIFICATION	NOMENCLATURE OR DESCRIPTION	REMARKS
2	1		NASM 122163	HELICAL COIL INSERT	3/8-16 UNC-2B X .75
1	1			ACCUMULATOR PISTON	

PARTS LIST

DISTRIBUTION STATEMENT C: DISTRIBUTION AUTHORIZED TO U.S. GOVERNMENT AGENCIES AND THEIR CONTRACTORS; OTHER REQUESTS MUST BE REFERRED TO CONNAVSEA OR THE COGNIZANT NAVSEA CODE.

WARNING: THIS DOCUMENT CONTAINS TECHNICAL DATA WHOSE EXPORT IS RESTRICTED BY THE ARMS EXPORT CONTROL ACT (TITLE 22, U.S.C. SEC. 2751 ET SEQ.) OR EXECUTIVE ORDER 12470. VIOLATIONS OF THESE EXPORT LAWS ARE SUBJECT TO SEVERE CRIMINAL PENALTIES.

DESTRUCTION NOTICE: DESTROY BY ANY METHOD THAT WILL PREVENT DISCLOSURE OF CONTENTS OR RECONSTRUCTION OF THE DOCUMENT.

NOTICE OF CONFIGURATION CONTROL

THIS DRAWING DEFINES AN ITEM OF UNDERWAY REPLENISHMENT (UNREP) STANDARD HARDWARE. NO REVISION TO THIS DRAWING OR THE HARDWARE REPRESENTED BY IT IS AUTHORIZED WITHOUT THE WRITTEN APPROVAL OF THE NAVAL SEA SYSTEMS COMMAND.

APPLICATION	
NEXT ASSY	USED ON
8287502	8287500

6	5	4	3	2	1
				–	–

SHEET NUMBER

REVISION STATUS OF SHEETS

MATERIAL:

PC 1: EXTRUDED ALUMINUM ALLOY AMS-QQ-A-200/8 TEMPER T6 OR T6510 OR ASTM B221 ALLOY 6061 TEMPER T6 OR T6510

UNLESS OTHERWISE SPECIFIED: ALL DIMENSIONS ARE IN INCHES TOLERANCES: ANGLES± .5° FRACTIONS± DECIMALS .XX± .02 .XXX± .005 BEND RADII FILLETS & ROUNDS .250 SURFACE FINISH BREAK ALL SHARP EDGES

INTERPRET DRAWING IN ACCORDANCE WITH STANDARDS PRESCRIBED IN ASME Y14.100

DO NOT SCALE THIS DRAWING

PORT HUENEME DIVISION
NAVAL SURFACE WARFARE CENTER
4363 MISSILE WAY
PORT HUENEME, CA 93043-4307

PREPARED	AMSEC	06-07
CHECKED		
TECH LEAD		
BR HD		
ACCEPTED BY NAVSEA		(SIGNATURE DOES NOT DENOTE APPROVAL)
APPROVED FOR NAVSEA		(SIGN ONLY IF ENGINEERING HAS BEEN "PROVED" BY MANUFACTURE AND TEST)

DEPARTMENT OF THE NAVY
NAVAL SEA SYSTEMS COMMAND
WASHINGTON, D.C. 20376-5160

HEAVY UNREP-NAVY STANDARD
RAM TENSIONER

ACCUMULATOR PISTON ASSEMBLY

SIZE	CAGE CODE	NAVSEA DWG NO.	REV
D	53711	8287524	–

SCALE 1/2 | UNIT WT 125 LBS | SHEET 1 OF 2

8287524

NSWC 4120/8 (REV 03-92)

REVISIONS				
ZONE	LTR	DESCRIPTION	DATE	APPROVED

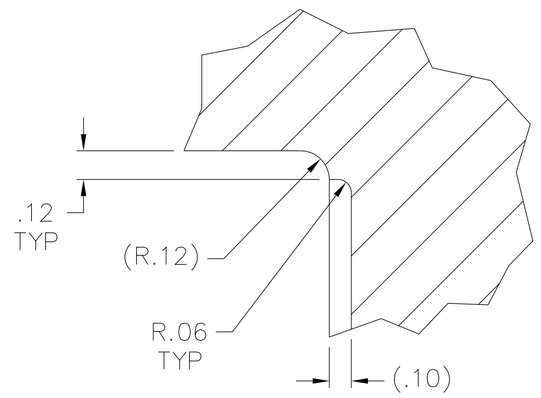

DETAIL E
SCALE: 2/1

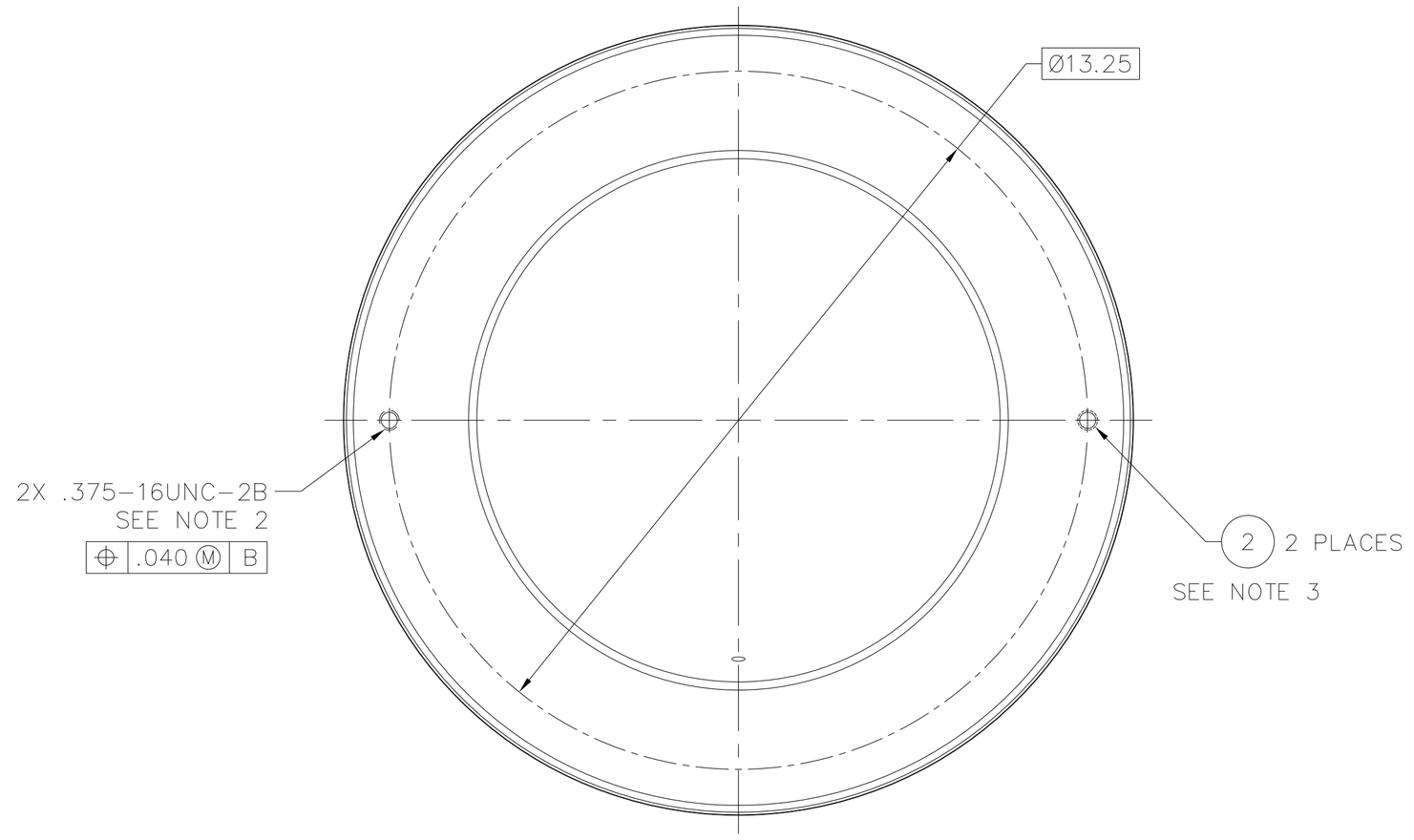

SECTION G-G
SCALE: 1/2

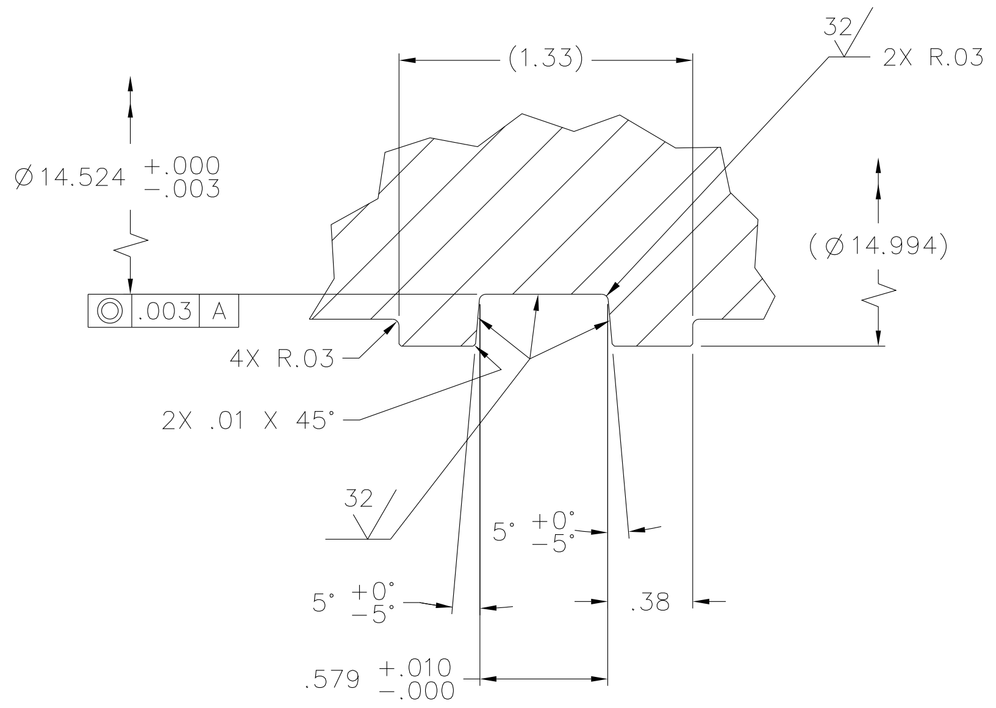

DETAIL D
SCALE: 2/1

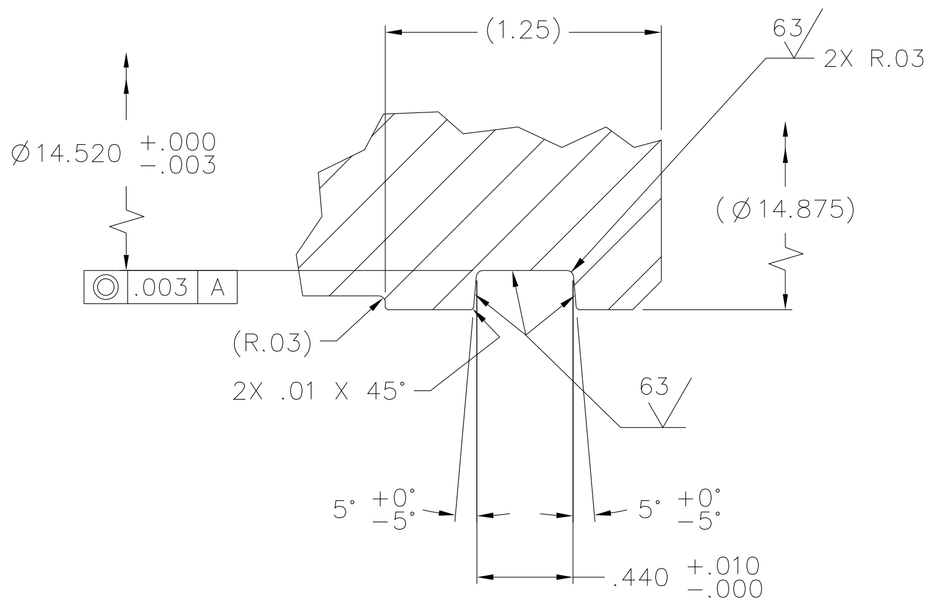

DETAIL B AND C
DETAIL B SHOWN
DETAIL C OPPOSITE
SCALE: 2/1

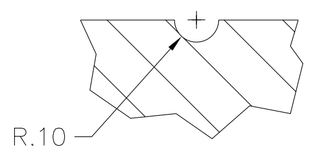

SECTION F-F
(3 PLACES)
SCALE: 2/1

8287524

SIZE	CAGE CODE	NAVSEA DWG NO.	REV
D	53711	8287524	—
SCALE AS NOTED		UNIT WT ———	SHEET 2

NSWC 4120/8 (REV 03-92)

REVISIONS				
ZONE	LTR	DESCRIPTION	DATE	APPROVED

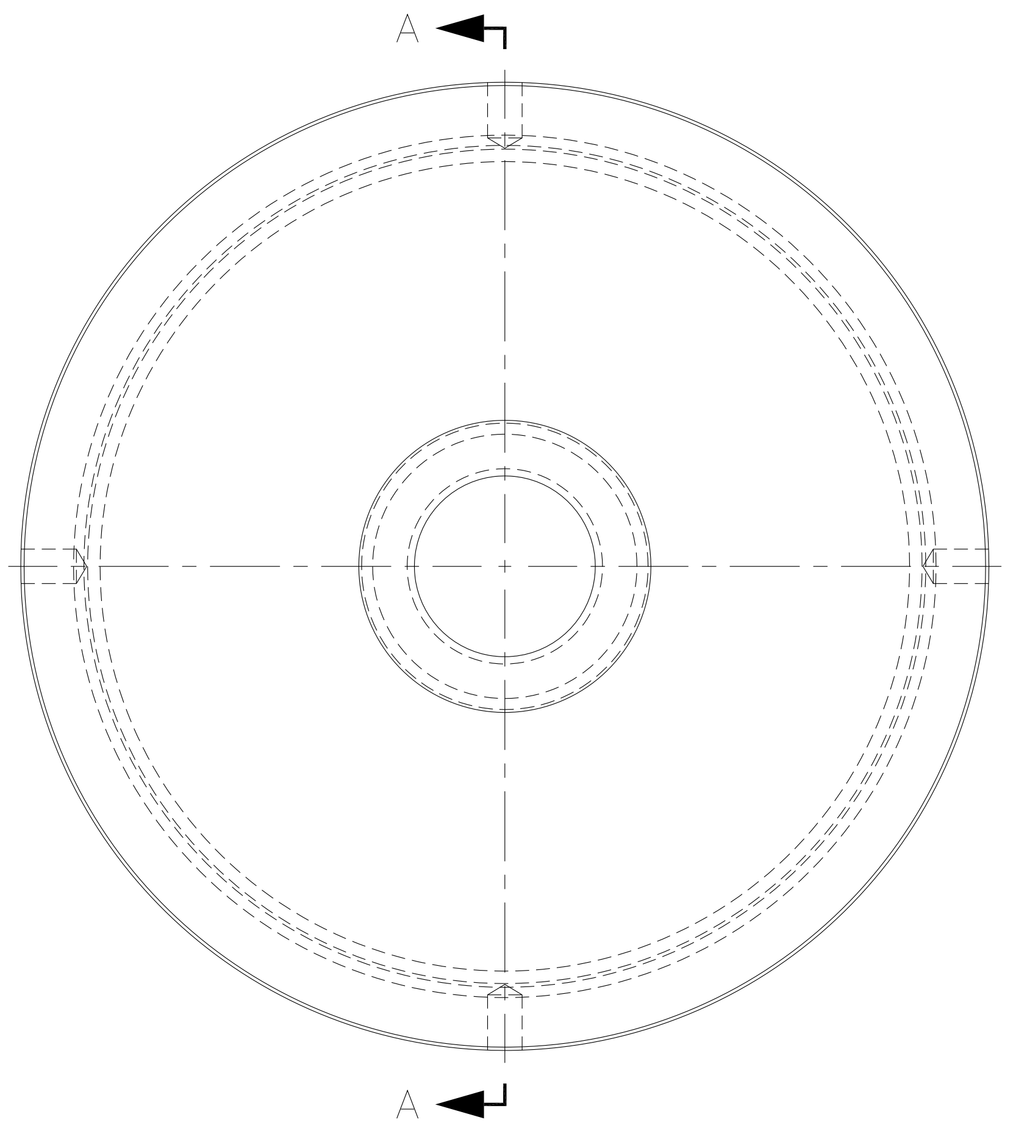

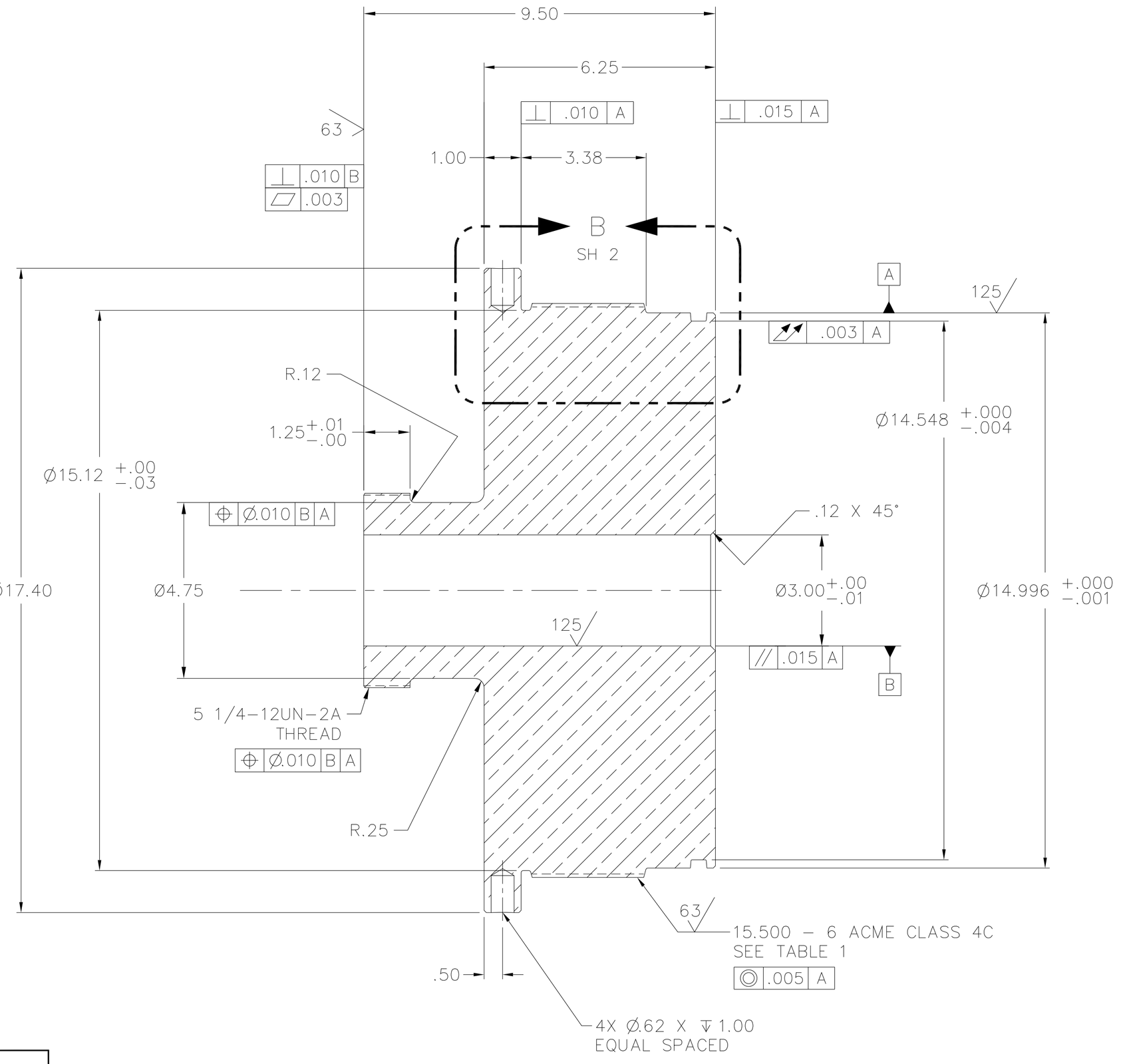

SECTION A−A

TABLE 1

EXTERNAL THREADS DATA	
15.500−6 ACME CLASS 4C	
MINOR DIA MIN	15.2953
MINOR DIA MAX	15.3133
PITCH DIA MIN	15.3890
PITCH DIA MAX	15.4009
MAJOR DIA MIN	15.4961
MAJOR DIA MAX	15.5000
PITCH	1.6667
NUMBER OF THREADS	6

NOTICE OF CONFIGURATION CONTROL

THIS DRAWING DEFINES AN ITEM OF UNDERWAY REPLENISHMENT (UNREP) STANDARD HARDWARE. NO REVISION TO THIS DRAWING OR THE HARDWARE REPRESENTED BY IT IS AUTHORIZED WITHOUT THE WRITTEN APPROVAL OF THE NAVAL SEA SYSTEMS COMMAND.

DISTRIBUTION STATEMENT C: DISTRIBUTION AUTHORIZED TO U.S. GOVERNMENT AGENCIES AND THEIR CONTRACTORS; OTHER REQUESTS MUST BE REFERRED TO COMNAVSEA OR THE COGNIZANT NAVSEA CODE.

WARNING: THIS DOCUMENT CONTAINS TECHNICAL DATA WHOSE EXPORT IS RESTRICTED BY THE ARMS EXPORT CONTROL ACT (TITLE 22, U.S.C. SEC. 2751 ET SEQ.) OR EXECUTIVE ORDER 12470. VIOLATIONS OF THESE EXPORT LAWS ARE SUBJECT TO SEVERE CRIMINAL PENALTIES.

DESTRUCTION NOTICE: DESTROY BY ANY METHOD THAT WILL PREVENT DISCLOSURE OF CONTENTS OR RECONSTRUCTION OF THE DOCUMENT.

PART OR IDENTIFYING NO.	QTY REQD	CODE IDENT NO.	DRAWING OR SPECIFICATION	NOMENCLATURE OR DESCRIPTION	REMARKS

PARTS LIST

APPLICATION	
NEXT ASSY	USED ON
8287502	8287500

MATERIAL:

ALUMINUM BRONZE
ASTM SB150
ALLOY C63000
CONDITION HR−510
OR M20

UNLESS OTHERWISE SPECIFIED:
ALL DIMENSIONS ARE IN INCHES
TOLERANCES: ANGLES± .5°
FRACTIONS±
DECIMALS
.XX± .02
.XXX±
BEND RADII
FILLETS & ROUNDS
SURFACE FINISH 250
BREAK ALL SHARP EDGES

INTERPRET DRAWING IN ACCORDANCE WITH STANDARDS PRESCRIBED IN ASME Y14.100

DO NOT SCALE THIS DRAWING

PORT HUENEME DIVISION
NAVAL SURFACE WARFARE CENTER
4363 MISSILE WAY
PORT HUENEME, CA 93043−4307

PREPARED	AMSEC	06−07
CHECKED		
TECH LEAD		
BR HD		
ACCEPTED BY NAVSEA	(SIGNATURE DOES NOT DENOTE APPROVAL)	
APPROVED FOR NAVSEA	(SIGN ONLY IF ENGINEERING HAS BEEN "PROVED" BY MANUFACTURE AND TEST)	

DEPARTMENT OF THE NAVY
NAVAL SEA SYSTEMS COMMAND
WASHINGTON, D.C. 20376−5160

HEAVY UNREP−NAVY STANDARD
RAM TENSIONER

ACCUMULATOR CAP

SIZE	CAGE CODE	NAVSEA DWG NO.	REV
D	53711	8287526	−

SCALE 1/2 | UNIT WT 115.5 LBS | SHEET 1 OF 2

6	5	4	3	2	1
				−	−

SHEET NUMBER

REVISION STATUS OF SHEETS

NSWC 4120/8 (REV 03−92)

8287526

REVISIONS				
ZONE	LTR	DESCRIPTION	DATE	APPROVED

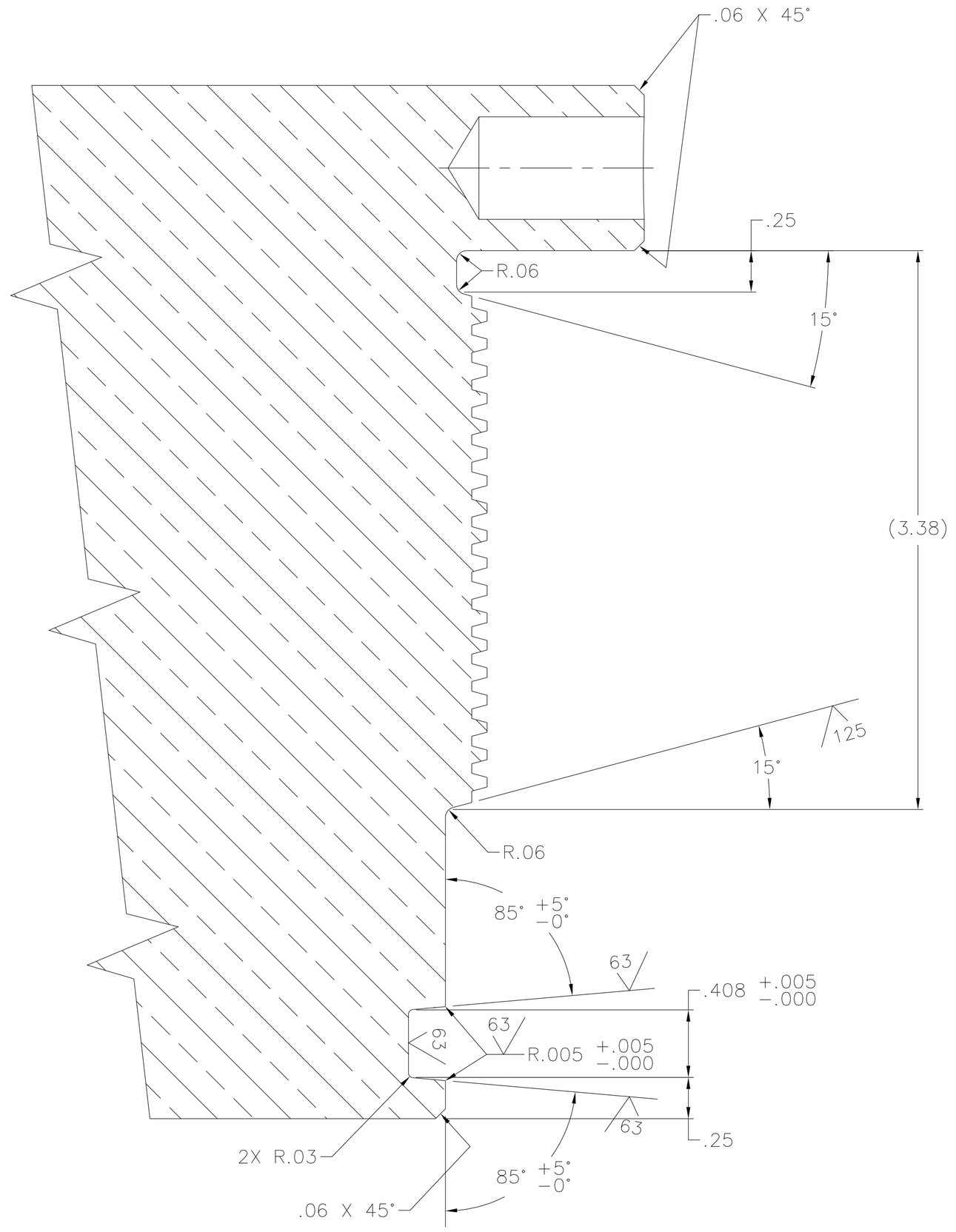

DETAIL B
ROTATED 90° CC

SIZE	CAGE CODE	NAVSEA DWG NO.	REV
D	53711	8287526	—
SCALE 2/1	UNIT WT ———	SHEET 2	

8287526

NSWC 4120/8 (REV 03-92)

NOTES:

1. WELDING REQUIREMENTS:

1.1 FABRICATION, WELDING, STRESS RELIEF AND INSPECTION SHALL BE IN ACCORDANCE WITH NAVSEA S9074-AR-GIB-010/278 AND T9074-AS-GIB-010/271, CLASS M-2, CATEGORY A. ALL WELDS ON THIS DRAWING ARE CLASSIFIED AS CATEGORY A AND REQUIRE ULTRASONIC (UT) INSPECTION.

1.2 CONDUCT 100% ULTRASONIC (UT) INSPECTION FOR WELDING IN ACCORDANCE WITH ASME 1998 BOILER AND PRESSURE VESSELS APPENDIX 12.

1.3 WELD INSPECTION STARTS AT ROOT WELD IAW TECHNICAL PUBLICATIONS LISTED IN 1.1 ABOVE.

1.4 DO NOT OVERHEAT OR CAUSE FLAKING OF THE CHROMIUM PLATING DURING WELDING.

2. WELDMENT MAY BE STRAIGHTENED IF REQUIRED TO MEET DIMENSIONAL REQUIREMENTS ON THE FACE OF DRAWING.

3. ACCUMULATOR DRAIN SHALL BE MANUFACTURED AND INSPECTED IN ACCORDANCE WITH DIVISION I OF SECTION VIII, ASME BOILER AND PRESSURE CODE.

4. PAINT ALL SURFACES, EXCEPT THOSE NOTED "DO NOT PAINT" USING PROCEDURES AND MATERIALS SPECIFIED IN PC 4 FOR SPECIAL PROCEDURE FOR RAM TENSIONERS.

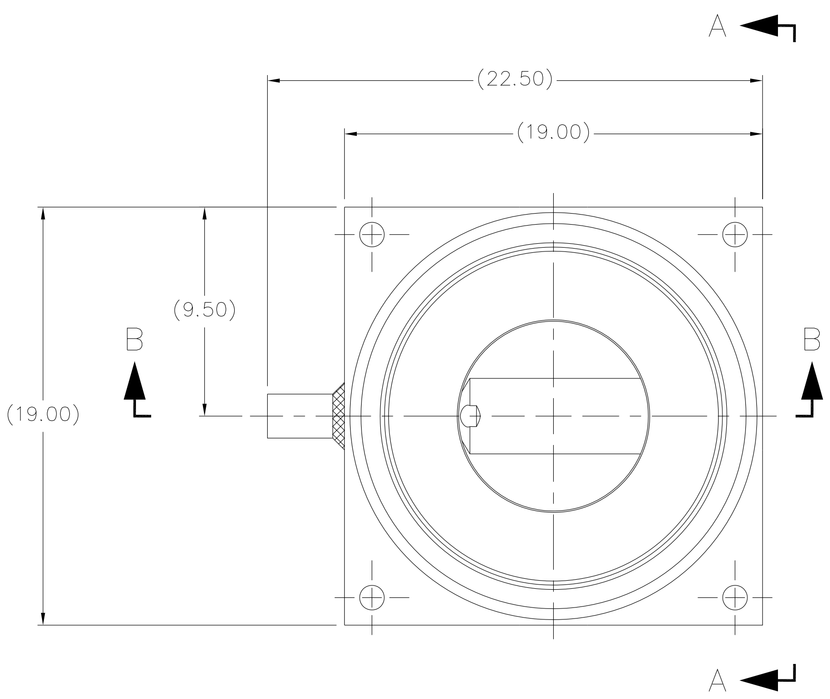

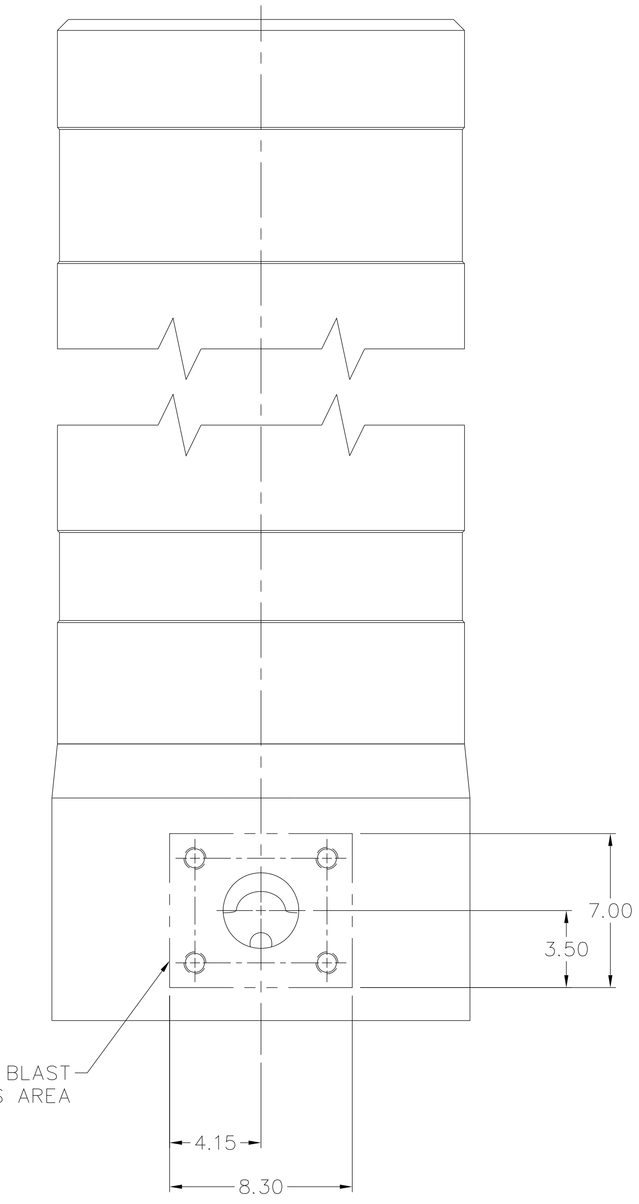

VIEW A-A
ROTATED 90° CW

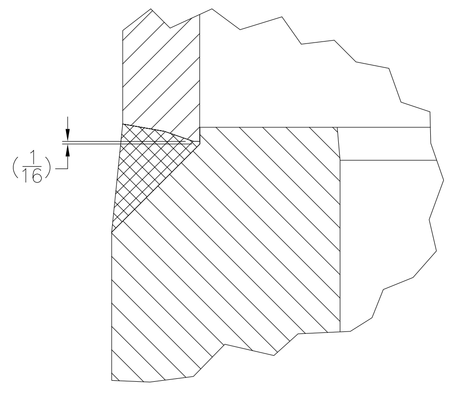

DETAIL C
SCALE: 1/2

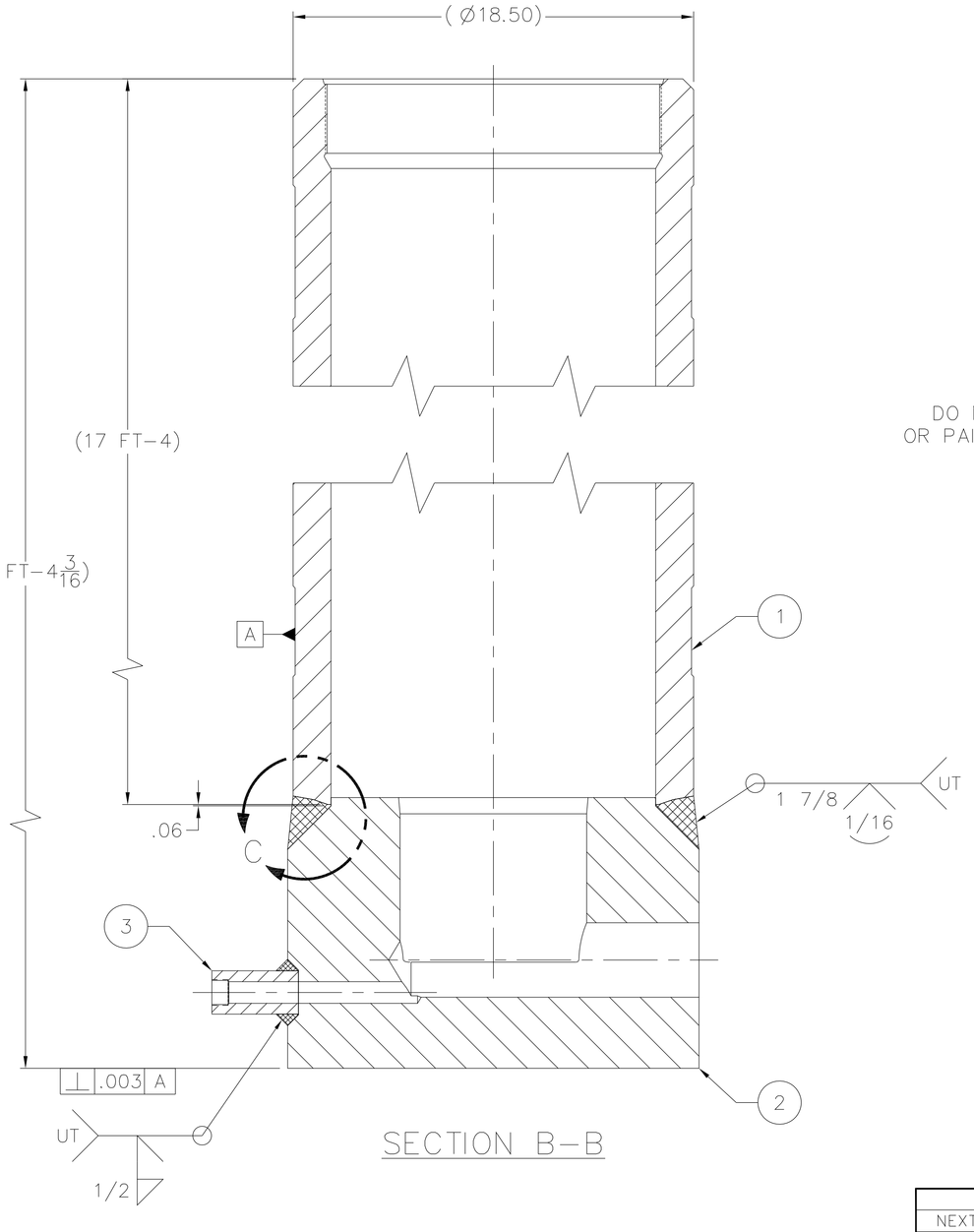

SECTION B-B

REVISIONS				
ZONE	LTR	DESCRIPTION	DATE	APPROVED

PART OR IDENTIFYING NO.	QTY REQD	CODE IDENT NO.	DRAWING OR SPECIFICATION	NOMENCLATURE OR DESCRIPTION	REMARKS
4	AR	53711	5210545	STD PAINT PROCEDURE-UNREP	SEE NOTE 4
3	1	–	8287530	ACCUMULATOR DRAIN	
2	1	–	8287529	ACCUMULATOR FLANGE	
1	1	–	8287528	ACCUMULATOR CYLINDER	

PARTS LIST

APPLICATION	
NEXT ASSY	USED ON
8287502	8287500

MATERIAL:

UNLESS OTHERWISE SPECIFIED:
ALL DIMENSIONS ARE IN INCHES
TOLERANCES: ANGLES± FRACTIONS± 1/32
DECIMALS
.XX± .02
.XXX±
BEND RADII
FILLETS & ROUNDS
SURFACE FINISH ✓
BREAK ALL SHARP EDGES
INTERPRET DRAWING IN ACCORDANCE WITH STANDARDS PRESCRIBED IN ASME Y14.100
DO NOT SCALE THIS DRAWING

PORT HUENEME DIVISION
NAVAL SURFACE WARFARE CENTER
4363 MISSILE WAY
PORT HUENEME, CA 93043-4307

PREPARED	AMSEC	06-07
CHECKED		
TECH LEAD		
BR HD		
ACCEPTED BY NAVSEA		(SIGNATURE DOES NOT DENOTE APPROVAL)
APPROVED FOR NAVSEA		(SIGN ONLY IF ENGINEERING HAS BEEN "PROVED" BY MANUFACTURE AND TEST)

DEPARTMENT OF THE NAVY
NAVAL SEA SYSTEMS COMMAND
WASHINGTON,D.C. 20376-5160

HEAVY UNREP-NAVY STANDARD
RAM TENSIONER

ACCUMULATOR CYLINDER WELDMENT

SIZE	CAGE CODE	NAVSEA DWG. NO.	REV
F	53711	8287527	–

SCALE 1/4 | UNIT WT 7450 LBS | SHEET 1 OF 1

8287527

NOTICE OF CONFIGURATION CONTROL

THIS DRAWING DEFINES AN ITEM OF UNDERWAY REPLENISHMENT (UNREP) STANDARD HARDWARE. NO REVISION TO THIS DRAWING OR THE HARDWARE REPRESENTED BY IT IS AUTHORIZED WITHOUT THE WRITTEN APPROVAL OF THE NAVAL SEA SYSTEMS COMMAND.

DISTRIBUTION STATEMENT C: DISTRIBUTION AUTHORIZED TO U.S. GOVERNMENT AGENCIES AND THEIR CONTRACTORS: OTHER REQUESTS MUST BE REFERRED TO COMNAVSEA OR THE COGNIZANT NAVSEA CODE.

WARNING: THIS DOCUMENT CONTAINS TECHNICAL DATA WHOSE EXPORT IS RESTRICTED BY THE ARMS EXPORT CONTROL ACT (TITLE 22, U.S.C. SEC. 2751 ET SEQ.) OR EXECUTIVE ORDER 12470. VIOLATIONS OF THESE EXPORT LAWS ARE SUBJECT TO SEVERE CRIMINAL PENALTIES.

DESTRUCTION NOTICE: DESTROY BY ANY METHOD THAT WILL PREVENT DISCLOSURE OF CONTENTS OR RECONSTRUCTION OF THE DOCUMENT.

NSWC 4120/7A (REV. 03-92)

NOTICE OF CONFIGURATION CONTROL

THIS DRAWING DEFINES AN ITEM OF UNDERWAY REPLENISHMENT (UNREP) STANDARD HARDWARE. NO REVISION TO THIS DRAWING OR THE HARDWARE REPRESENTED BY IT IS AUTHORIZED WITHOUT THE WRITTEN APPROVAL OF THE NAVAL SEA SYSTEMS COMMAND.

DISTRIBUTION STATEMENT C: DISTRIBUTION AUTHORIZED TO U.S. GOVERNMENT AGENCIES AND THEIR CONTRACTORS; OTHER REQUESTS MUST BE REFERRED TO COMNAVSEA OR THE COGNIZANT NAVSEA CODE.

WARNING: THIS DOCUMENT CONTAINS TECHNICAL DATA WHOSE EXPORT IS RESTRICTED BY THE ARMS EXPORT CONTROL ACT (TITLE 22, U.S.C. 2751 ET SEQ.) OR EXECUTIVE ORDER 12470. VIOLATIONS OF THESE EXPORT LAWS ARE SUBJECT TO SEVERE CRIMINAL PENALTIES.

DESTRUCTION NOTICE: DESTROY BY ANY METHOD THAT WILL PREVENT DISCLOSURE OF CONTENTS OR RECONSTRUCTION OF THE DOCUMENT.

APPLICATION	
NEXT ASSY	USED ON
8287527	8287500

MATERIAL:
SEAMLESS STEEL PIPE PER ASTM A106 GRADE C SEE NOTE 3

INTERPRET DRAWING IN ACCORDANCE WITH STANDARDS PRESCRIBED IN ASME Y14.100

DO NOT SCALE THIS DRAWING

SURFACE FINISH 250/
FILLETS & ROUNDS .XX± .02 .XXX± .005
BEND RADII DECIMALS FRACTIONS± 1/32 TOLERANCES: ANGLES± .5° ALL DIMENSIONS ARE IN INCHES UNLESS OTHERWISE SPECIFIED:
BREAK ALL SHARP EDGES

ACCEPTED		APPROVED FOR NAVSEA
BY NAVSEA		
BR HD		
TECH LEAD		
CHECKED		
PREPARED	AMSEC 06-07	

(SIGN ONLY IF ENGINEERING HAS BEEN TRANSFERRED TO ANOTHER ACTIVITY AND NSWCP ACCEPTANCE AND NOTE)

(SIGNATURE DOES NOT CONSTITUTE APPROVAL)

NAVAL SURFACE WARFARE CENTER
4363 MISSILE WAY
PORT HUENEME, CA 93043-4307
PORT HUENEME DIVISION

ACCUMULATOR CYLINDER

SIZE	CAGE CODE	NAVSEA DWG. NO.	REV
F	53711	8287528	—

HEAVY UNREP-NAVY STANDARD
RAM TENSIONER

NAVAL SEA SYSTEMS COMMAND
WASHINGTON,D.C. 20376-5160

DEPARTMENT OF THE NAVY

SCALE 1/4 | UNIT WT 6342 LBS | SHEET 1 OF 1

PARTS LIST

PART OR IDENTIFYING NO.	QTY REQD	CODE IDENT NO.	DRAWING OR SPECIFICATION	NOMENCLATURE OR DESCRIPTION	REMARKS

SECTION A–A

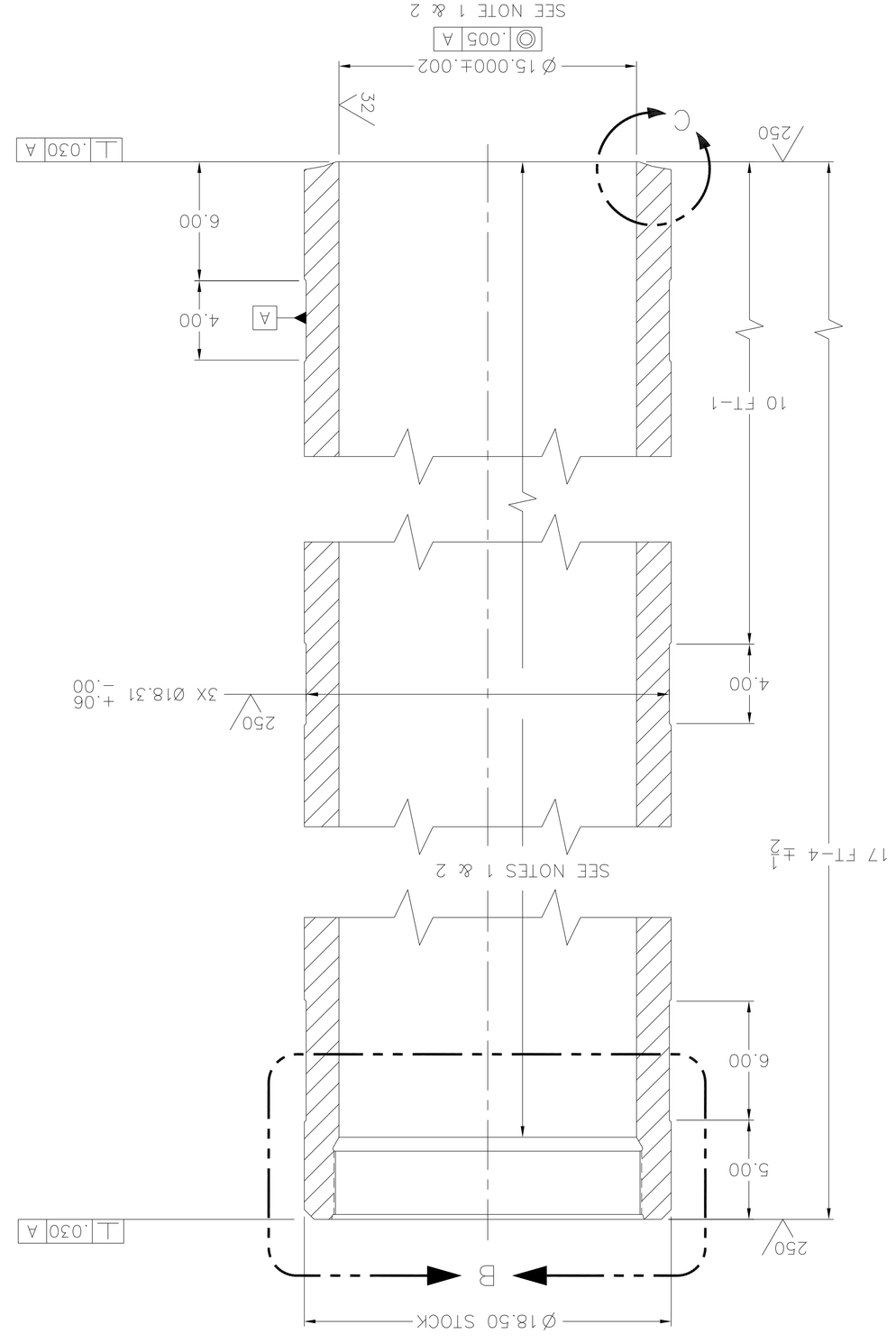

DETAIL C

SCALE: 1/1

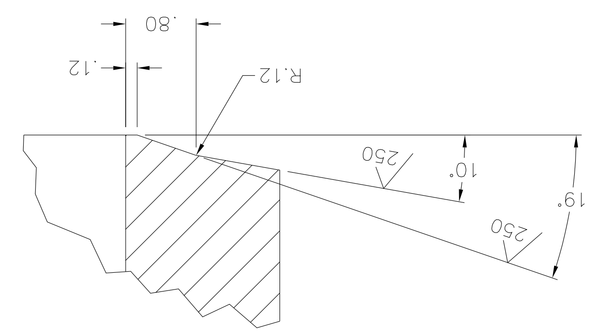

DETAIL D

SCALE: 2/1

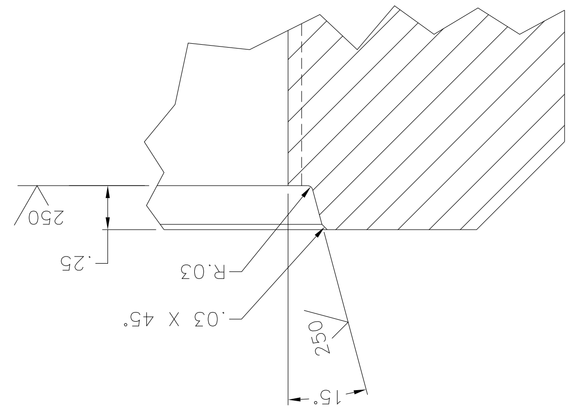

DETAIL B

SCALE: 1/2

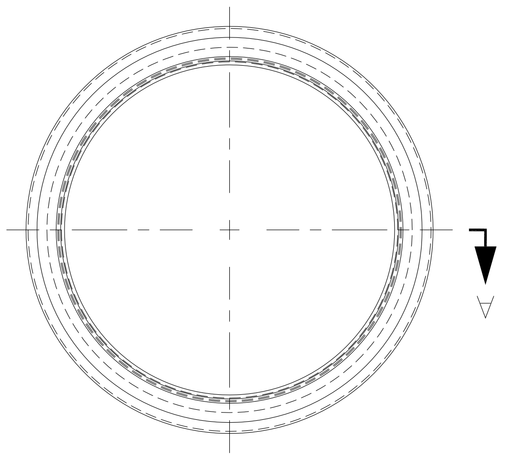

TABLE 1

INTERNAL THREAD DATA	
15.500-6 ACME CLASS 4C INTERNAL	
MAJOR DIA MAX	15.5118 IN
MAJOR DIA MIN	15.5039 IN
PITCH DIA MAX	15.4287 IN
PITCH DIA MIN	15.4167 IN
MINOR DIA MAX	15.3583 IN
MINOR DIA MIN	15.3500 IN
PITCH	1.6667
NUMBER OF THREADS	6

NOTES:

1. BEFORE PLATING, PEEN THE SURFACE INDICATED (15.000 INSIDE DIAMETER) IN ACCORDANCE WITH AMS-S-13165 OR MIL-R-81841. INTENSITY SHALL BE .006 TO .010 INCH. DO NOT PEEN THE INTERNAL SURFACES INDICATED IN DETAIL B.
2. AFTER PEENING, HARD CHROMIUM PLATE THE SURFACE INDICATED IN ACCORDANCE WITH SAE-AMS-QQ-C-320, CLASS 2. THE HARD CHROMIUM PLATING SHALL BE .011 TO .013 INCH THICK, THEN FINISHED TO THE FINAL DIMENSION. DIMENSION BEFORE PLATING SHALL BE Ø15.014 ±.002 AND AFTER PLATING, Ø15.000 ±.002. REMAINING PLATING THICKNESS WILL BE .005 TO .009 INCH.
3. THE SPECIFICATION LISTED IN THE MATERIAL BLOCK CAN BE FOUND IN SECTION II OF THE ASME BOILER AND PRESSURE VESSEL CODE.
4. ACCUMULATOR CYLINDER SHALL BE MANUFACTURED AND INSPECTED IN ACCORDANCE WITH DIVISION I OF SECTION VIII, ASME BOILER AND PRESSURE CODE.

ZONE	LTR	DESCRIPTION	DATE	APPROVED
REVISIONS				

8287528 _ T _ 1

NOTES:

1. THE SPECIFICATION LISTED IN THE MATERIAL BLOCK CAN BE FOUND IN SECTION II OF THE ASME BOILER AND PRESSURE VESSEL CODE.
2. ACCUMULATOR FLANGE SHALL BE MANUFACTURED AND INSPECTED IN ACCORDANCE WITH DIVISION I OF SECTION VIII, ASME BOILER AND PRESSURE CODE.

REVISIONS				
ZONE	LTR	DESCRIPTION	DATE	APPROVED

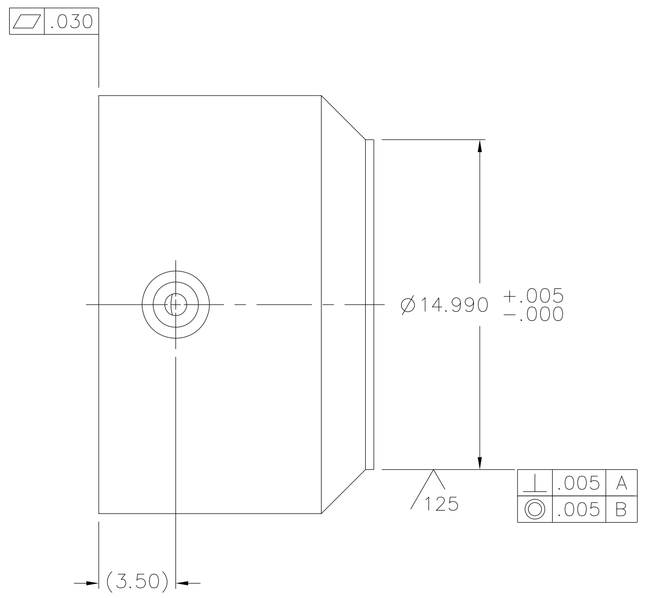

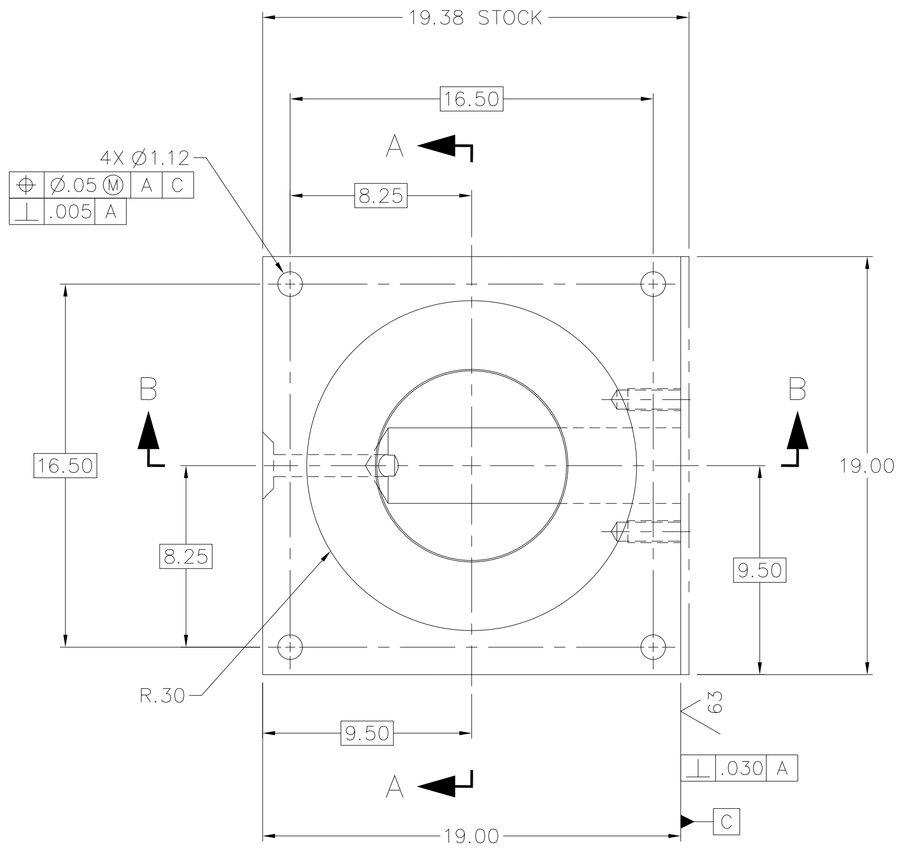

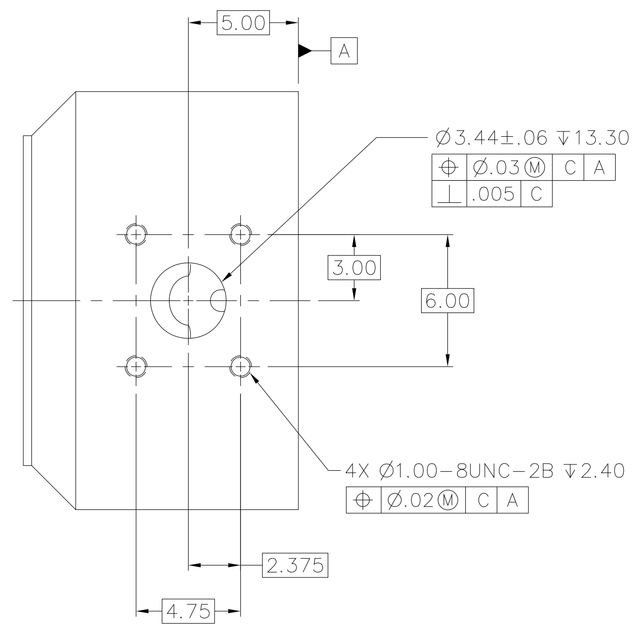

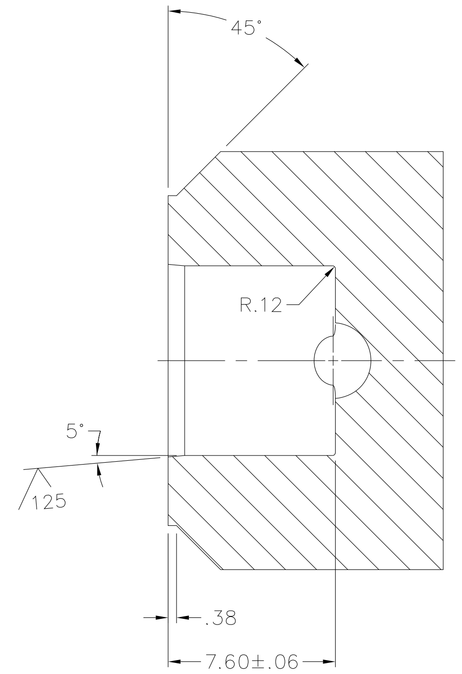

SECTION A−A

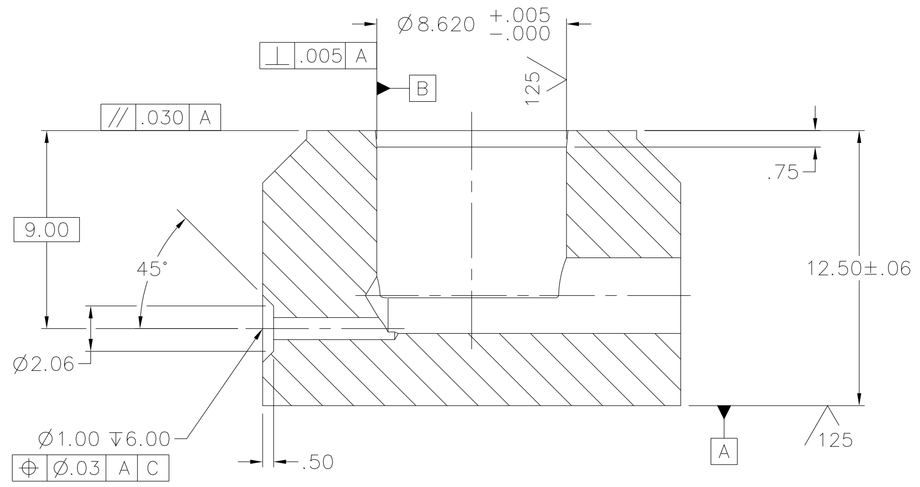

SECTION B−B

PART OR IDENTIFYING NO.	QTY REQD	CODE IDENT NO.	DRAWING OR SPECIFICATION	NOMENCLATURE OR DESCRIPTION	REMARKS
				PARTS LIST	

APPLICATION	
NEXT ASSY	USED ON
8287527	8287500

MATERIAL:
STEEL
PER
ASTM A516
GRADE 70
SEE NOTE 1

UNLESS OTHERWISE SPECIFIED:
ALL DIMENSIONS ARE IN INCHES
TOLERANCES: ANGLES± .5°
FRACTIONS±
DECIMALS
.XX± .02
.XXX± .005
BEND RADII
FILLETS & ROUNDS
250
SURFACE FINISH
BREAK ALL SHARP EDGES

INTERPRET DRAWING IN ACCORDANCE WITH STANDARDS PRESCRIBED IN ASME Y14.100

DO NOT SCALE THIS DRAWING

PREPARED	AMSEC	06−07
CHECKED		
TECH LEAD		
BR HD		
ACCEPTED BY NAVSEA		(SIGNATURE DOES NOT DENOTE APPROVAL)
APPROVED FOR NAVSEA		(SIGN ONLY IF ENGINEERING HAS BEEN "PROVED" BY MANUFACTURE AND TEST)

PORT HUENEME DIVISION
NAVAL SURFACE WARFARE CENTER
4363 MISSILE WAY
PORT HUENEME, CA 93043−4307

DEPARTMENT OF THE NAVY
NAVAL SEA SYSTEMS COMMAND
WASHINGTON,D.C. 20376−5160

HEAVY UNREP−NAVY STANDARD
RAM TENSIONER

ACCUMULATOR FLANGE

SIZE	CAGE CODE	NAVSEA DWG. NO.	REV
F	53711	8287529	−

SCALE 1/4 | UNIT WT 1012 LBS | SHEET 1 OF 1

8287529

NOTICE OF CONFIGURATION CONTROL

THIS DRAWING DEFINES AN ITEM OF UNDERWAY REPLENISHMENT (UNREP) STANDARD HARDWARE. NO REVISION TO THIS DRAWING OR THE HARDWARE REPRESENTED BY IT IS AUTHORIZED WITHOUT THE WRITTEN APPROVAL OF THE NAVAL SEA SYSTEMS COMMAND.

DISTRIBUTION STATEMENT C: DISTRIBUTION AUTHORIZED TO U.S. GOVERNMENT AGENCIES AND THEIR CONTRACTORS: OTHER REQUESTS MUST BE REFERRED TO COMNAVSEA OR THE COGNIZANT NAVSEA CODE.

WARNING: THIS DOCUMENT CONTAINS TECHNICAL DATA WHOSE EXPORT IS RESTRICTED BY THE ARMS EXPORT CONTROL ACT (TITLE 22, U.S.C. SEC. 2751 ET SEQ.) OR EXECUTIVE ORDER 12470. VIOLATIONS OF THESE EXPORT LAWS ARE SUBJECT TO SEVERE CRIMINAL PENALTIES.

DESTRUCTION NOTICE: DESTROY BY ANY METHOD THAT WILL PREVENT DISCLOSURE OF CONTENTS OR RECONSTRUCTION OF THE DOCUMENT.

NOTES:

1. THE SPECIFICATION LISTED IN THE MATERIAL BLOCK CAN BE FOUND IN SECTION II OF THE ASME BOILER AND PRESSURE VESSEL CODE.

2. ACCUMULATOR DRAIN SHALL BE MANUFACTURED AND INSPECTED IN ACCORDANCE WITH DIVISION I OF SECTION VIII, ASME BOILER AND PRESSURE CODE.

REVISIONS				
ZONE	LTR	DESCRIPTION	DATE	APPROVED

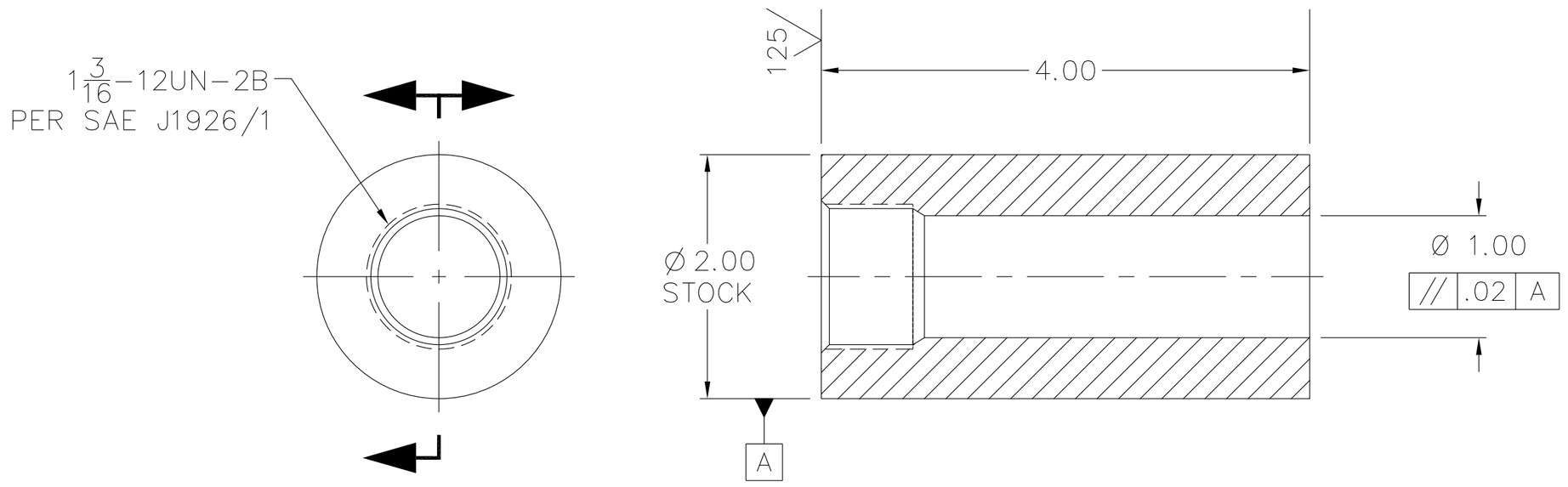

DISTRIBUTION STATEMENT C: DISTRIBUTION AUTHORIZED TO U.S. GOVERNMENT AGENCIES AND THEIR CONTRACTORS; OTHER REQUESTS MUST BE REFERRED TO COMNAVSEA OR THE COGNIZANT NAVSEA CODE.

WARNING: THIS DOCUMENT CONTAINS TECHNICAL DATA WHOSE EXPORT IS RESTRICTED BY THE ARMS EXPORT CONTROL ACT (TITLE 22, U.S.C. SEC. 2751 ET SEQ.) OR EXECUTIVE ORDER 12470. VIOLATIONS OF THESE EXPORT LAWS ARE SUBJECT TO SEVERE CRIMINAL PENALTIES.

DESTRUCTION NOTICE: DESTROY BY ANY METHOD THAT WILL PREVENT DISCLOSURE OF CONTENTS OR RECONSTRUCTION OF THE DOCUMENT.

PART OR IDENTIFYING NO.	QTY REQD	CODE IDENT NO.	DRAWING OR SPECIFICATION	NOMENCLATURE OR DESCRIPTION	REMARKS

PARTS LIST

NOTICE OF CONFIGURATION CONTROL

THIS DRAWING DEFINES AN ITEM OF UNDERWAY REPLENISHMENT (UNREP) STANDARD HARDWARE. NO REVISION TO THIS DRAWING OR THE HARDWARE REPRESENTED BY IT IS AUTHORIZED WITHOUT THE WRITTEN APPROVAL OF THE NAVAL SEA SYSTEMS COMMAND.

APPLICATION	
NEXT ASSY	USED ON
8287527	8287500

MATERIAL:

STEEL
PER
ASME SA739
GRADE B11
(SEE NOTE 1)

UNLESS OTHERWISE SPECIFIED:
ALL DIMENSIONS ARE IN INCHES
TOLERANCES: ANGLES±
FRACTIONS±
DECIMALS
.XX± .02
.XXX±
BEND RADII
FILLETS & ROUNDS
SURFACE FINISH 250
BREAK ALL SHARP EDGES

INTERPRET DRAWING IN ACCORDANCE WITH STANDARDS PRESCRIBED IN ASME Y14.100

DO NOT SCALE THIS DRAWING

PORT HUENEME DIVISION
NAVAL SURFACE WARFARE CENTER
4363 MISSILE WAY
PORT HUENEME, CA 93043–4307

PREPARED	AMSEC	06–07
CHECKED		
TECH LEAD		
BR HD		
ACCEPTED BY NAVSEA	(SIGNATURE DOES NOT DENOTE APPROVAL)	
APPROVED FOR NAVSEA	(SIGN ONLY IF ENGINEERING HAS BEEN "PROVED" BY MANUFACTURE AND TEST)	

DEPARTMENT OF THE NAVY
NAVAL SEA SYSTEMS COMMAND
WASHINGTON, D.C. 20376–5160

HEAVY UNREP–NAVY STANDARD
RAM TENSIONER

ACCUMULATOR DRAIN

SIZE	CAGE CODE	NAVSEA DWG NO.	REV
C	53711	8287530	–

SCALE 1/1 | UNIT WT .3 LBS | SHEET 1 OF 1

8287530

NSWC 4120/4 (REV. 03–92)

REVISIONS				
ZONE	LTR	DESCRIPTION	DATE	APPROVED

SUGGESTED SOURCE(S) OF SUPPLY			
SUPPLIER/VENDOR DATA			
CODE IDENT	PART/DRAWING NUMBER	NAME & ADDRESS	APPLICATION
5F573	ITEM 1 126-45801 ITEM 2 801-0050	GREENE, TWEED & CO. INC 2075 DETWILER ROAD KULPSVILLE, PA 19443-0000 WEBSITE: WWW.GTWEED.COM PHONE: (215) 256-9521 FAX: (215) 513-9411	HEAVY UNREP NAVY STANDARD RAM TENSIONER

NOTES:

1. ALL DIMENSIONS ON THE FACE OF THIS DRAWING ARE REFERENCE.
2. IDENTIFICATION OF THE "SUGGESTED SOURCE(S) OF SUPPLY" HEREON IS NOT TO BE CONSTRUED AS A GUARANTEE OF PRESENT OR CONTINUED AVAILABILITY AS A SOURCE OF SUPPLY FOR THE ITEM DESCRIBED ON THE DRAWING.
3. THE SUGGESTED SOURCE(S) LISTED ARE NOT INTENDED TO REPRESENT THE ONLY SOURCE(S) FOR THIS ITEM(S).

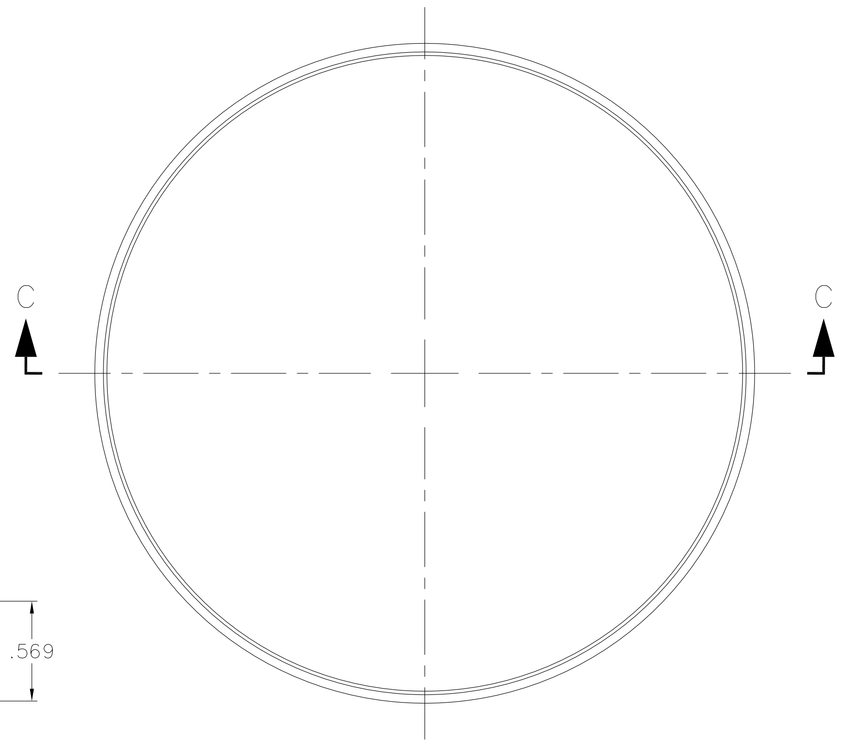

DETAIL PC 1

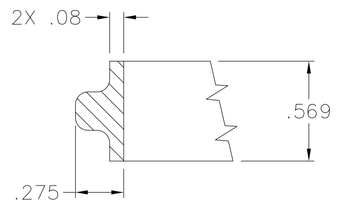

DETAIL D
SCALE: 2/1

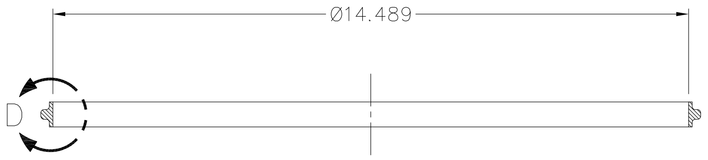

SECTION C-C

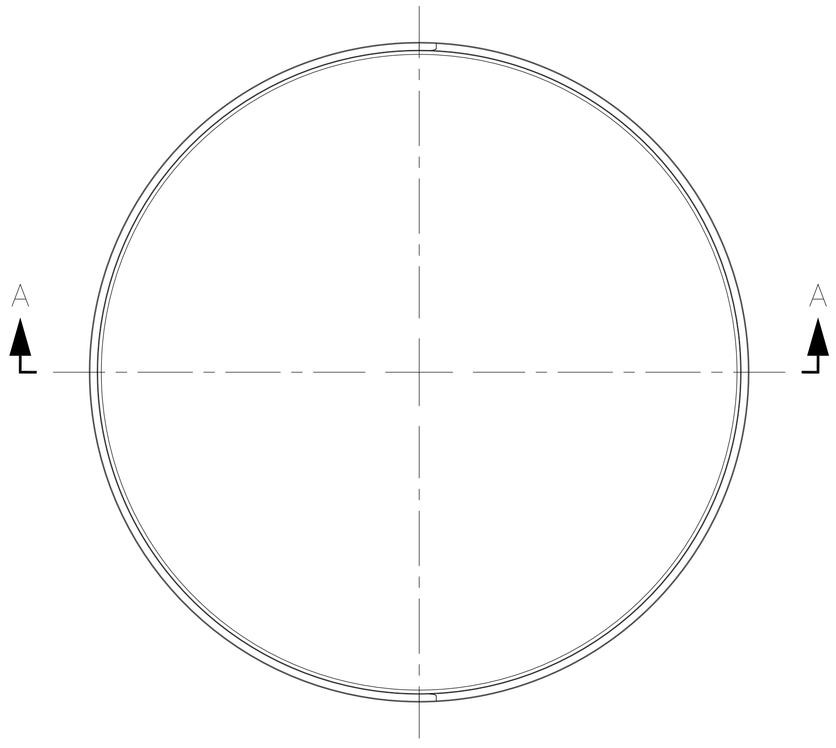

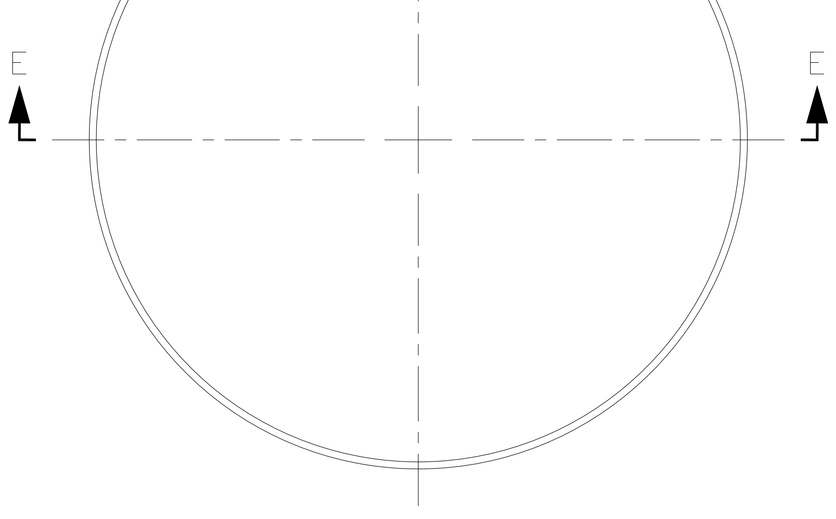

DETAIL PC 2

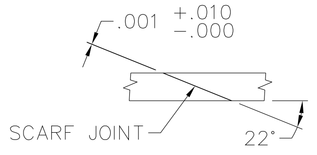

DETAIL G
SCALE: 2/1

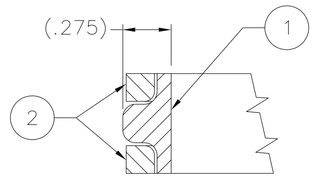

DETAIL B
SCALE: 2/1

SECTION A-A

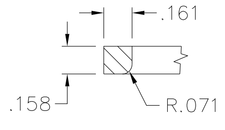

DETAIL F
SCALE: 2/1

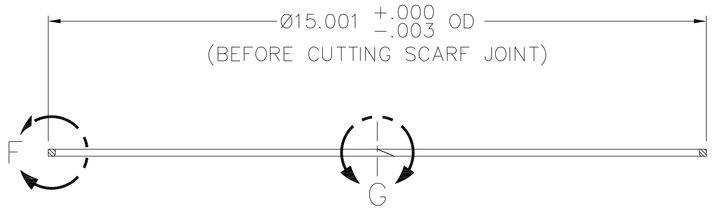

SECTION E-E

NOTICE OF CONFIGURATION CONTROL

THIS DRAWING DEFINES AN ITEM OF UNDERWAY REPLENISHMENT (UNREP) STANDARD HARDWARE. NO REVISION TO THIS DRAWING OR THE HARDWARE REPRESENTED BY IT IS AUTHORIZED WITHOUT THE WRITTEN APPROVAL OF THE NAVAL SEA SYSTEMS COMMAND.

DISTRIBUTION STATEMENT C: DISTRIBUTION AUTHORIZED TO U.S. GOVERNMENT AGENCIES AND THEIR CONTRACTORS; OTHER REQUESTS MUST BE REFERRED TO COMNAVSEA OR THE COGNIZANT NAVSEA CODE.

WARNING: THIS DOCUMENT CONTAINS TECHNICAL DATA WHOSE EXPORT IS RESTRICTED BY THE ARMS EXPORT CONTROL ACT (TITLE 22, U.S.C. SEC. 2751 ET SEQ.) OR EXECUTIVE ORDER 12470. VIOLATIONS OF THESE EXPORT LAWS ARE SUBJECT TO SEVERE CRIMINAL PENALTIES.

DESTRUCTION NOTICE: DESTROY BY ANY METHOD THAT WILL PREVENT DISCLOSURE OF CONTENTS OR RECONSTRUCTION OF THE DOCUMENT.

NSWC 4120/1A (REV. 03-92)

SPECIFICATION CONTROL DRAWING

PART OR IDENTIFYING NO.	QTY REQD	CODE IDENT NO.	DRAWING OR SPECIFICATION	NOMENCLATURE OR DESCRIPTION	REMARKS
2	2	–	–	OUTER SEAL	
1	1	–	–	INNER SEAL	

PARTS LIST

APPLICATION	
NEXT ASSY	USED ON
8287502	8287500

MATERIAL:
ITEM 1
801 COMPOUND
(ETHYLENE PROPYLENE 80 DURO SHORE A)
ITEM 2
AVALON 02
(VIRGIN PTFE)

UNLESS OTHERWISE SPECIFIED:
ALL DIMENSIONS ARE IN INCHES
TOLERANCES: ANGLES±
FRACTIONS±
DECIMALS
.XX±
.XXX± .010
BEND RADII
FILLETS & ROUNDS
SURFACE FINISH ✓
BREAK ALL SHARP EDGES
INTERPRET DRAWING IN ACCORDANCE WITH STANDARDS PRESCRIBED IN ASME Y14.100
DO NOT SCALE THIS DRAWING

PREPARED	AMSEC	06-07
CHECKED		
TECH LEAD		
BR HD		
ACCEPTED BY NAVSEA		(SIGNATURE DOES NOT DENOTE APPROVAL)
APPROVED FOR NAVSEA		(SIGN ONLY IF ENGINEERING HAS BEEN "PROVED" BY MANUFACTURE AND TEST)

PORT HUENEME DIVISION
NAVAL SURFACE WARFARE CENTER
4363 MISSILE WAY
PORT HUENEME, CA 93043-4307

DEPARTMENT OF THE NAVY
NAVAL SEA SYSTEMS COMMAND
WASHINGTON,D.C. 20376-5160

HEAVY UNREP-NAVY STANDARD
RAM TENSIONER

ACCUM PISTON SEAL (T-RING) ASSY

SIZE	CAGE CODE	NAVSEA DWG. NO.	REV
F	53711	8287531	–

SCALE 1/2 | UNIT WT .2 LBS | SHEET 1 OF 1

8287531 – B

REVISIONS				
ZONE	LTR	DESCRIPTION	DATE	APPROVED

SUGGESTED SOURCE(S) OF SUPPLY			
SUPPLIER/VENDOR DATA			
CODE IDENT	PART/DRAWING NUMBER	NAME & ADDRESS	APPLICATION
5F573	4042-001084	GREENE, TWEED & CO. INC 2075 DETWILER ROAD KULPSVILLE, PA 19443-0000 WEBSITE: WWW.GTWEED.COM PHONE: (215) 256-9521 FAX: (215) 513-9411	HEAVY UNREP NAVY STANDARD RAM TENSIONER

NOTES:

1. ALL DIMENSIONS ON THE FACE OF THIS DRAWING ARE REFERENCE.
2. IDENTIFICATION OF THE "SUGGESTED SOURCE(S) OF SUPPLY" HEREON IS NOT TO BE CONSTRUED AS A GUARANTEE OF PRESENT OR CONTINUED AVAILABILITY AS A SOURCE OF SUPPLY FOR THE ITEM DESCRIBED ON THE DRAWING.
3. THE SUGGESTED SOURCE(S) LISTED ARE NOT INTENDED TO REPRESENT THE ONLY SOURCE(S) FOR THIS ITEM(S).

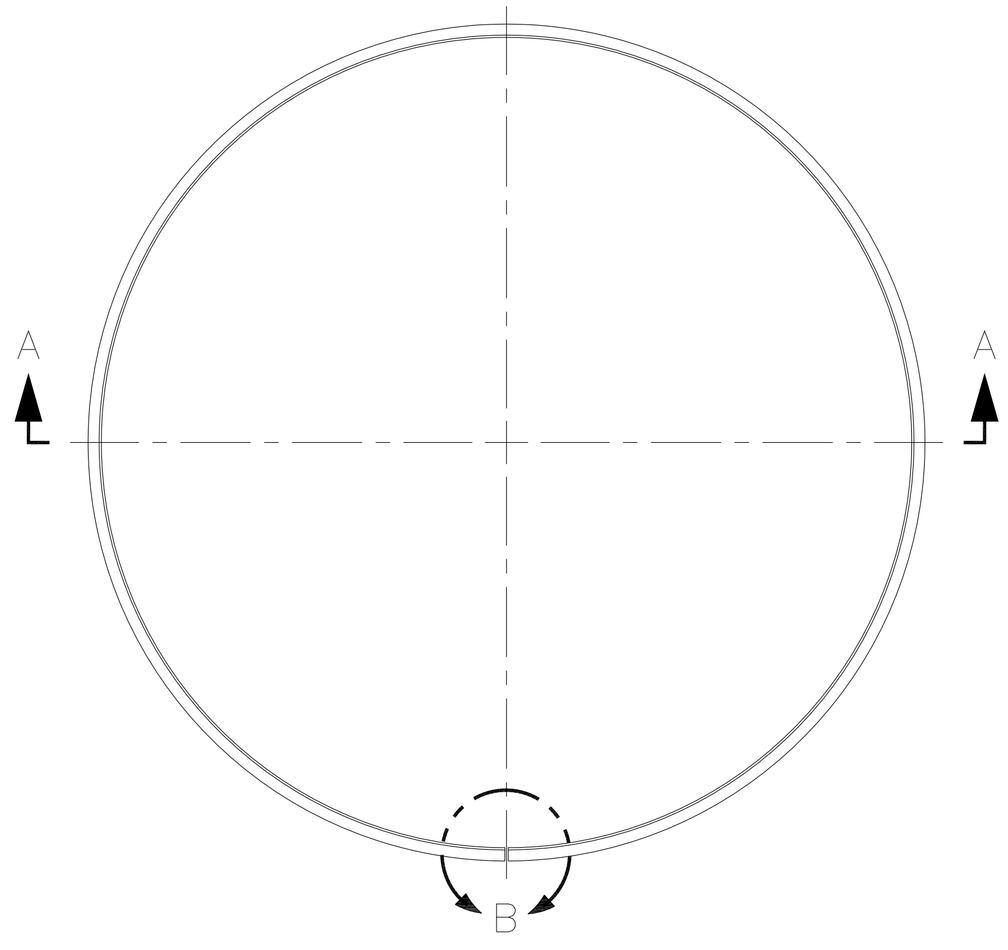

DETAIL B
SCALE: 2/1

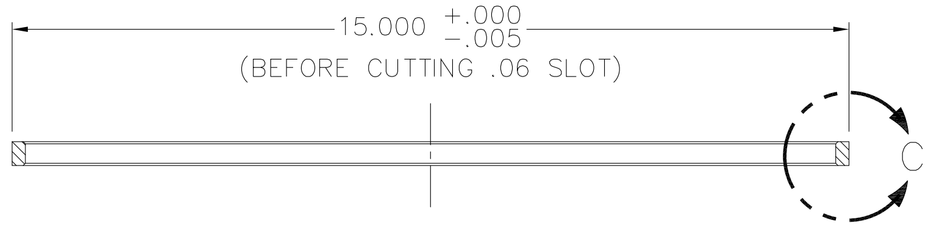

SECTION A–A

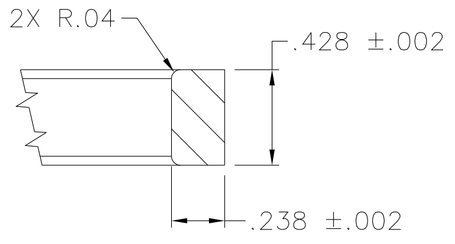

DETAIL C
SCALE: 2/1

SPECIFICATION CONTROL DRAWING

PART OR IDENTIFYING NO.	QTY REQD	CODE IDENT NO.	DRAWING OR SPECIFICATION	NOMENCLATURE OR DESCRIPTION	REMARKS

PARTS LIST

NOTICE OF CONFIGURATION CONTROL

THIS DRAWING DEFINES AN ITEM OF UNDERWAY REPLENISHMENT (UNREP) STANDARD HARDWARE. NO REVISION TO THIS DRAWING OR THE HARDWARE REPRESENTED BY IT IS AUTHORIZED WITHOUT THE WRITTEN APPROVAL OF THE NAVAL SEA SYSTEMS COMMAND.

DISTRIBUTION STATEMENT C: DISTRIBUTION AUTHORIZED TO U.S. GOVERNMENT AGENCIES AND THEIR CONTRACTORS; OTHER REQUESTS MUST BE REFERRED TO COMNAVSEA OR THE COGNIZANT NAVSEA CODE.

WARNING: THIS DOCUMENT CONTAINS TECHNICAL DATA WHOSE EXPORT IS RESTRICTED BY THE ARMS EXPORT CONTROL ACT (TITLE 22, U.S.C. SEC. 2751 ET SEQ.) OR EXECUTIVE ORDER 12470. VIOLATIONS OF THESE EXPORT LAWS ARE SUBJECT TO SEVERE CRIMINAL PENALTIES.

DESTRUCTION NOTICE: DESTROY BY ANY METHOD THAT WILL PREVENT DISCLOSURE OF CONTENTS OR RECONSTRUCTION OF THE DOCUMENT.

APPLICATION	
NEXT ASSY	USED ON
8287502	8287500

MATERIAL:
AVALON 02
(VIRGIN PTFE)

UNLESS OTHERWISE SPECIFIED:
ALL DIMENSIONS ARE IN INCHES
TOLERANCES: ANGLES±
FRACTIONS±
DECIMALS
.XX±
.XXX±
BEND RADII
FILLETS & ROUNDS
SURFACE FINISH ✓
BREAK ALL SHARP EDGES
INTERPRET DRAWING IN ACCORDANCE WITH STANDARDS PRESCRIBED IN ASME Y14.100
DO NOT SCALE THIS DRAWING

PORT HUENEME DIVISION
NAVAL SURFACE WARFARE CENTER
4363 MISSILE WAY
PORT HUENEME, CA 93043-4307

PREPARED	AMSEC	06-07
CHECKED		
TECH LEAD		
BR HD		
ACCEPTED BY NAVSEA	(SIGNATURE DOES NOT DENOTE APPROVAL)	
APPROVED FOR NAVSEA	(SIGN ONLY IF ENGINEERING HAS BEEN "PROVED" BY MANUFACTURE AND TEST)	

DEPARTMENT OF THE NAVY
NAVAL SEA SYSTEMS COMMAND
WASHINGTON, D.C. 20376-5160

HEAVY UNREP-NAVY STANDARD
RAM TENSIONER

ACCUMULATOR PISTON RING

SIZE	CAGE CODE	NAVSEA DWG NO.	REV
D	53711	8287532	—

SCALE 1/2 | UNIT WT .2 LBS | SHEET 1 OF 1

8287532

NSWC 4120/8 (REV 03-92)

NOTES:

1. ONLY THE ITEM DESCRIBED ON THIS DRAWING WHEN PURCHASED FROM THE VENDOR(S) LISTED HEREON IS APPROVED BY THE NAVY FOR THE APPLICATION(S) SPECIFIED HEREIN. A SUBSTITUTE ITEM SHALL NOT BE USED WITHOUT PRIOR APPROVAL BY THE NAVY.
2. IDENTIFICATION OF THE "APPROVED SOURCE(S) OF SUPPLY" HEREON IS NOT TO BE CONSTRUED AS A GUARANTEE OF PRESENT OR CONTINUED AVAILABILITY AS A SOURCE OF SUPPLY FOR THE ITEM DESCRIBED ON THE DRAWING.
3. PART TO BE TO MANUFACTURER'S TOLERANCE.
4. PAINT ALL SURFACES, EXCEPT THOSE NOTED "DO NOT PAINT", USING PROCEDURES AND MATERIALS SPECIFIED IN PC 1 USING SPECIAL PROCEDURES FOR RAM TENSIONERS.
5. ALL O-RINGS TO BE VITON.
6. PRESSURE RELIEF VALVE SHALL BE SET TO 350 PSI.
7. HAND PUMP SHALL INCLUDE AN OUTLET CHECK VALVE.
8. PUMP CHARACTERISTICS:
   500 PSI MAXIMUM PRESSURE RATING
   2 INCH DIAMETER PISTON
   4.71 CU IN DISPLACEMENT PER STROKE
   100 LB HANDLE EFFORT AT 500 PSI

APPROVED SOURCE(S) OF SUPPLY			
SUPPLIER/VENDOR DATA			
CODE IDENT	PART/DRAWING NUMBER	NAME & ADDRESS	APPLICATION
95745	P6A-LR-SS	STAR HYDRAULICS, INC. 2729 CLINTON STREET RIVER GROVE, IL 60171-1501 WEB: WWW.STARHYD.COM PHONE: (708) 453-3238 FAX: (708) 453-0297	NAVY STANDARD HEAVY UNREP RAM TENSIONER

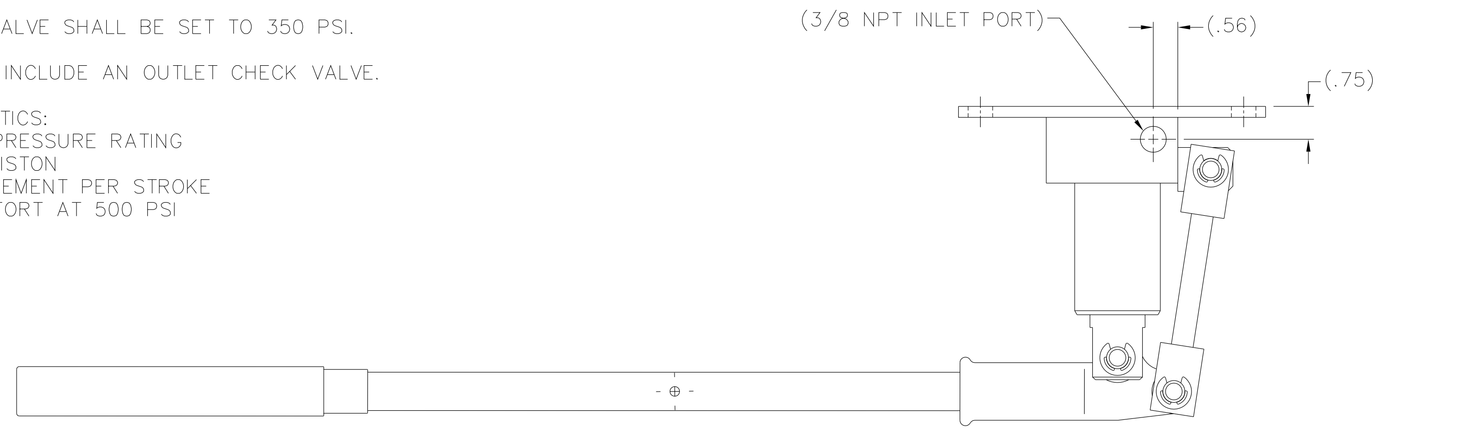

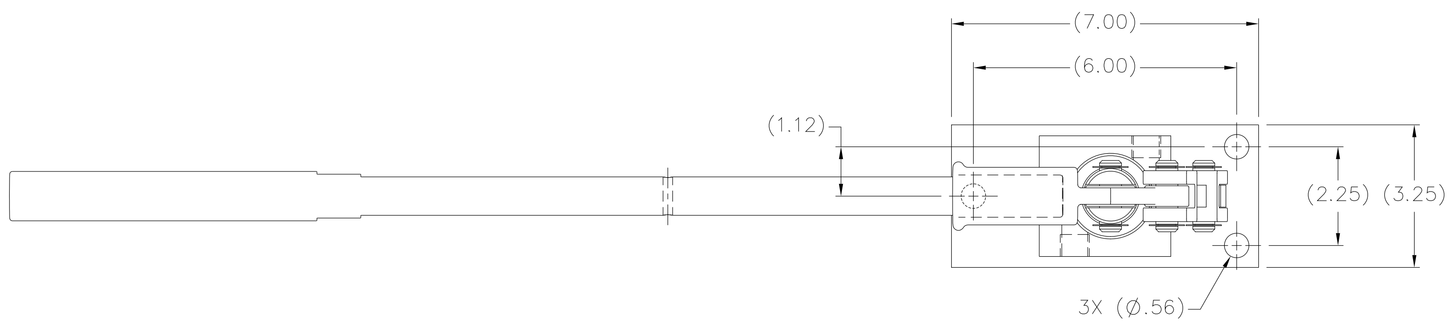

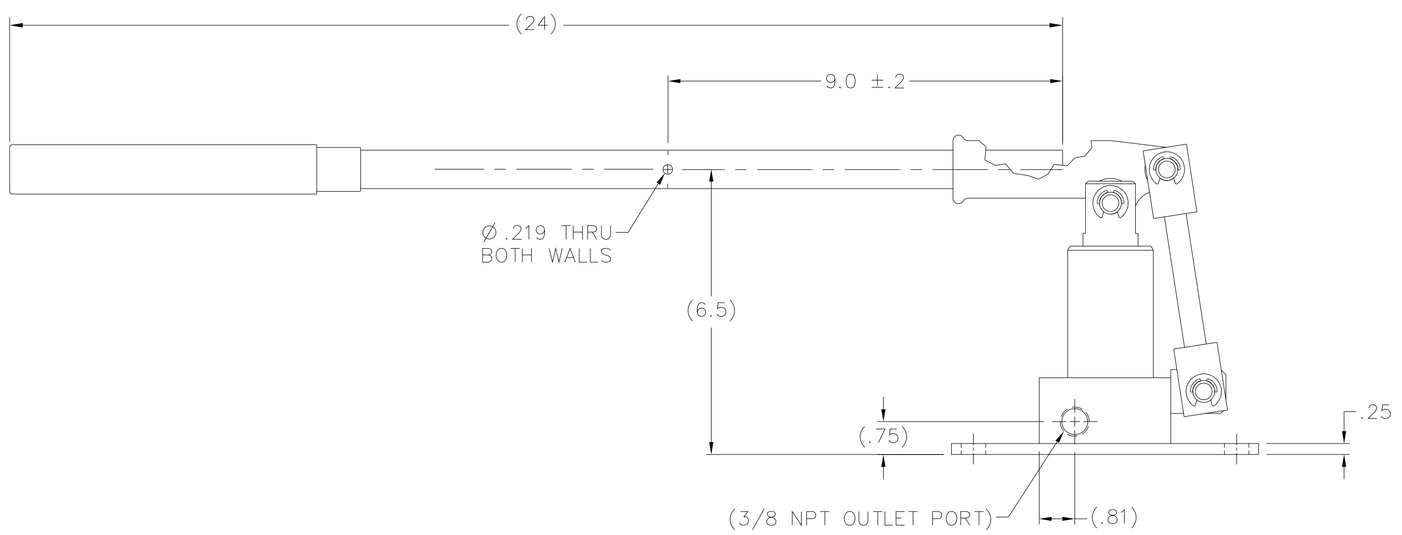

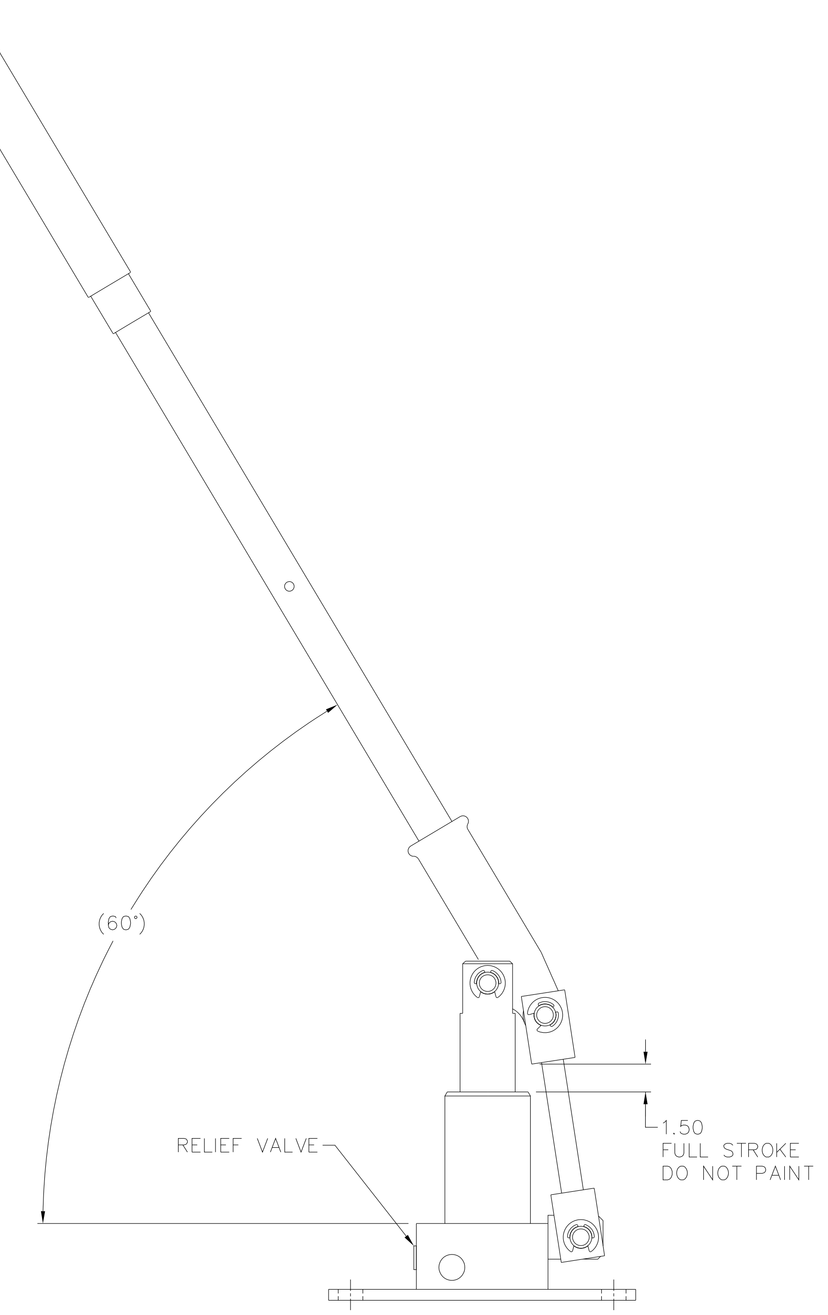

ALTERED ITEM DRAWING

PART OR IDENTIFYING NO.	QTY REQD	CODE IDENT NO.	DRAWING OR SPECIFICATION	NOMENCLATURE OR DESCRIPTION	REMARKS
1	AR	53711	5210545	STD PAINT PROCEDURE-UNREP	SEE NOTE 4

PARTS LIST

APPLICATION	
NEXT ASSY	USED ON
8287504	8287500

MATERIAL:

UNLESS OTHERWISE SPECIFIED:
ALL DIMENSIONS ARE IN INCHES
TOLERANCES: ANGLES± FRACTIONS± DECIMALS .XX± .02 .XXX± .005
BEND RADII
FILLETS & ROUNDS
SURFACE FINISH √
BREAK ALL SHARP EDGES
INTERPRET DRAWING IN ACCORDANCE WITH STANDARDS PRESCRIBED IN ASME Y14.100
DO NOT SCALE THIS DRAWING

PORT HUENEME DIVISION
NAVAL SURFACE WARFARE CENTER
4363 MISSILE WAY
PORT HUENEME, CA 93043-4307

PREPARED	AMSEC	06-07
CHECKED		
TECH LEAD		
BR HD		
ACCEPTED BY NAVSEA		(SIGNATURE DOES NOT DENOTE APPROVAL)
APPROVED FOR NAVSEA		(SIGN ONLY IF ENGINEERING HAS BEEN "PROVED" BY MANUFACTURE AND TEST)

DEPARTMENT OF THE NAVY
NAVAL SEA SYSTEMS COMMAND
WASHINGTON,D.C. 20376-5160

HEAVY UNREP – NAVY STANDARD
RAM TENSIONER

HAND PUMP

SIZE	CAGE CODE	NAVSEA DWG. NO.	REV
F	53711	8287533	–

SCALE 1/2 | UNIT WT 10 LBS | SHEET 1 OF 1

8287533

NOTICE OF CONFIGURATION CONTROL

THIS DRAWING DEFINES AN ITEM OF UNDERWAY REPLENISHMENT (UNREP) STANDARD HARDWARE. NO REVISION TO THIS DRAWING OR THE HARDWARE REPRESENTED BY IT IS AUTHORIZED WITHOUT THE WRITTEN APPROVAL OF THE NAVAL SEA SYSTEMS COMMAND.

DISTRIBUTION STATEMENT C: DISTRIBUTION AUTHORIZED TO U.S. GOVERNMENT AGENCIES AND THEIR CONTRACTORS: OTHER REQUESTS MUST BE REFERRED TO COMNAVSEA OR THE COGNIZANT NAVSEA CODE.

WARNING: THIS DOCUMENT CONTAINS TECHNICAL DATA WHOSE EXPORT IS RESTRICTED BY THE ARMS EXPORT CONTROL ACT (TITLE 22, U.S.C. SEC. 2751 ET SEQ.) OR EXECUTIVE ORDER 12470. VIOLATIONS OF THESE EXPORT LAWS ARE SUBJECT TO SEVERE CRIMINAL PENALTIES.

DESTRUCTION NOTICE: DESTROY BY ANY METHOD THAT WILL PREVENT DISCLOSURE OF CONTENTS OR RECONSTRUCTION OF THE DOCUMENT.

REVISIONS				
ZONE	LTR	DESCRIPTION	DATE	APPROVED

NSWC 4120/1A (REV. 03-92)

NOTES:

1. STOCK SIZE IN REMARKS COLUMN OF PARTS LIST IS NOMINAL WITHOUT MANUFACTURING ALLOWANCE.

2. INTERPRET BRAZING METHODS IN ACCORDANCE WITH ANSI/AWS A3.0 ANY ONE OF THE THREE METHODS PROVIDED MAY BE UTILIZED.

3. BRAZING PROCESS AND PROCEDURE SHALL BE IN ACCORDANCE WITH NAVSEA 0900-LP-001-7000, CLASS P-3V. GRADE V SIL-BRAZE-RINGS ARE PROVIDED IN THE TAILPIECES OF PIECE 2 AND 3. ANY SUPPLEMENTAL FACE FED BRAZE ROD USED SHALL BE GRADE V IN ACCORDANCE WITH QQ-B-654. BRAZE BEFORE INSTALLING O-RINGS.

4. THE TUBING ASSEMBLY SHALL BE FLUSHED IN ACCORDANCE WITH MIL-STD-419, PARA 5.4. REMOVE O-RINGS PRIOR TO FLUSHING.

5. THE TUBING ASSEMBLY SHALL BE HYDROSTATICALLY TESTED TO 100 PSIG AND HELD FOR 30 MINUTES WITHOUT LEAKAGE. ALL EQUIPMENT REQUIRED FOR TEST SHALL BE PROVIDED BY THE MANUFACTURER.

6. AFTER HYDROSTATIC TESTING, PAINT ALL EXTERIOR SURFACES USING PROCEDURES AND MATERIALS SPECIFIED IN PC 4 USING SPECIAL PROCEDURE FOR RAM TENSIONER: STAINLESS STEEL AND BRONZE PARTS.

7. APPLY O-RING LUBRICANT, PC 6, TO O-RINGS PC 5 TO MATING SURFACES AND GROOVES. FOLLOW MANUFACTURER'S INSTRUCTIONS FOR APPLICATION.

7.1 PETROLEUM BASED O-RING LUBRICANTS SHALL NOT BE USED OR SUBSTITUTED FOR PC 6.

8. THE FOLLOWING ITEM(S) MAY BE PROCURED FROM THE VENDOR(S) LISTED.

8.1 PC 6: O-RING LUBRICANT (SILICONE),
APPROVED SOURCE OF SUPPLY:
PARKER HANNIFIN CORP, O-RING DIVISION
2360 PALUMBO DRIVE
LEXINGTON, KY 40509-1048
CAGE CODE: 02697
TRADE NAME: PARKER SUPER O-LUBE

9. LENGTH AND CONFIGURATION OF TUBE, PC 1, CAN VARY. ESTABLISH EXACT LENGTH AND CONFIGURATION AT NEXT ASSEMBLY.

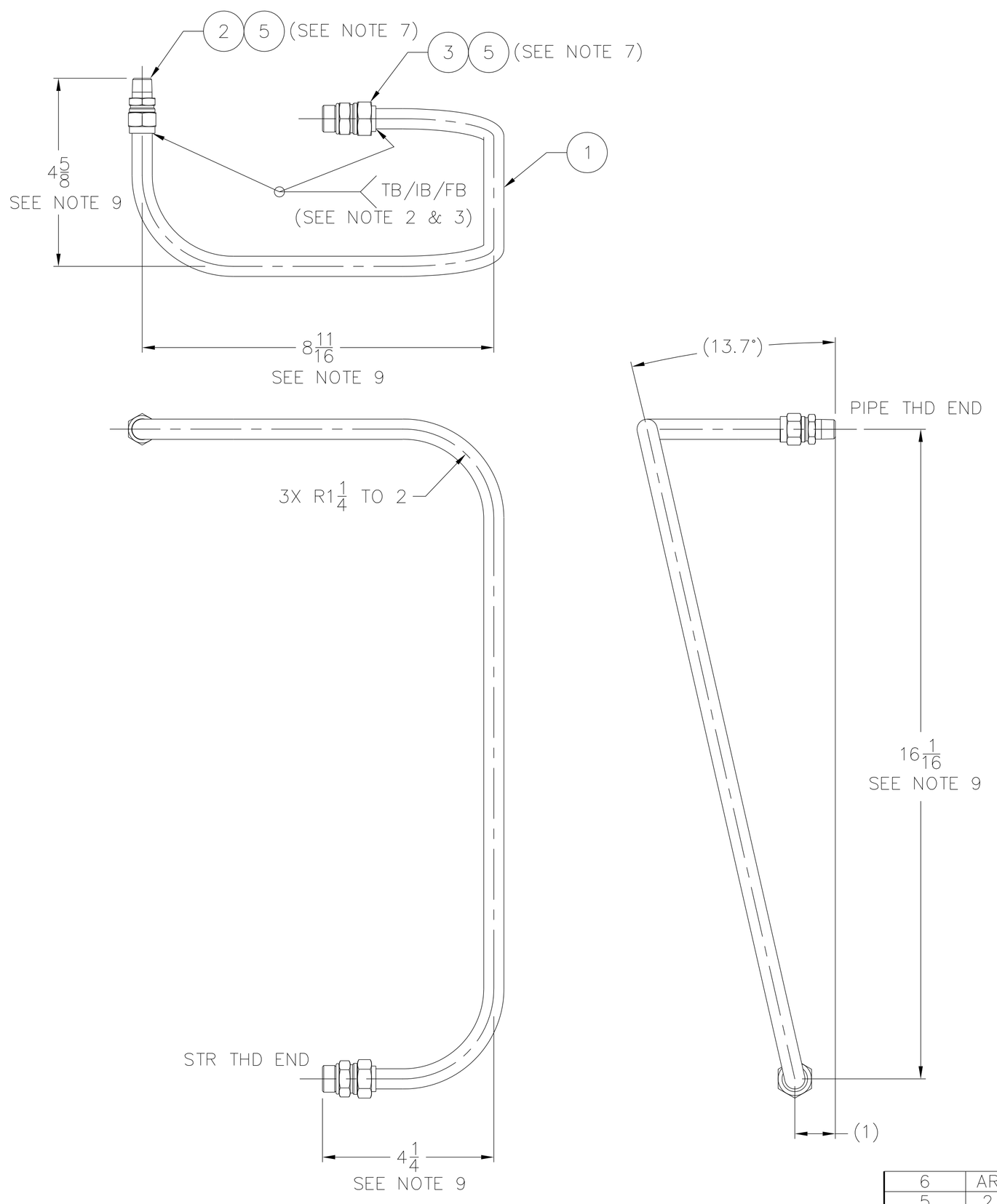

REVISIONS				
ZONE	LTR	DESCRIPTION	DATE	APPROVED

PART OR IDENTIFYING NO.	QTY REQD	CODE IDENT NO.	DRAWING OR SPECIFICATION	NOMENCLATURE OR DESCRIPTION	REMARKS
6	AR	02697		O-RING LUBRICANT	SEE NOTE 7 AND 8
5	2	–	SAE AMS7276	O-RING, FKM (VITON) 75 DURO, 1/2 OD TUBE	SAE AS568-015
4	AR	53711	5210545	STD PAINT PROCEDURE-UNREP	SEE NOTE 6
3	1	53711	8287596-2	TUBE TO STR THD CONN ASSY	1/2 OD TUBE X 3/4-16UNF
2	1	53711	8287586-2	TUBE TO MALE PIPE CONN ASSY	1/2 OD TUBE X 3/8-18NPT
1	1	–		SEAMLESS TUBE, 1/2 OD	.065 WALL X 30 LG

PARTS LIST

APPLICATION	
NEXT ASSY	USED ON
8287504	8287500

MATERIAL:
PC 1: CRES
PER ASTM A269
GRADE TP316
ANNEALED

UNLESS OTHERWISE SPECIFIED:
ALL DIMENSIONS ARE IN INCHES
TOLERANCES: ANGLES± .5°
FRACTIONS± 1/16
DECIMALS
.XX±
.XXX±
BEND RADII
FILLETS & ROUNDS
SURFACE FINISH √
BREAK ALL SHARP EDGES
INTERPRET DRAWING IN ACCORDANCE WITH STANDARDS PRESCRIBED IN ASME Y14.100
DO NOT SCALE THIS DRAWING

PORT HUENEME DIVISION NAVAL SURFACE WARFARE CENTER 4363 MISSILE WAY PORT HUENEME, CA 93043-4307		
PREPARED	AMSEC	06-07
CHECKED		
TECH LEAD		
BR HD		
ACCEPTED BY NAVSEA		(SIGNATURE DOES NOT DENOTE APPROVAL)
APPROVED FOR NAVSEA		(SIGN ONLY IF ENGINEERING HAS BEEN "PROVED" BY MANUFACTURE AND TEST)

DEPARTMENT OF THE NAVY
NAVAL SEA SYSTEMS COMMAND
WASHINGTON, D.C. 20376-5160

HEAVY UNREP – NAVY STANDARD
RAM TENSIONER

SUPPLY TANK INLET TUBING ASSEMBLY

SIZE	CAGE CODE	NAVSEA DWG NO.	REV
D	53711	8287534	–

SCALE 1/2 | UNIT WT 1.1 LBS | SHEET 1 OF 1

8287534

NOTICE OF CONFIGURATION CONTROL

THIS DRAWING DEFINES AN ITEM OF UNDERWAY REPLENISHMENT (UNREP) STANDARD HARDWARE. NO REVISION TO THIS DRAWING OR THE HARDWARE REPRESENTED BY IT IS AUTHORIZED WITHOUT THE WRITTEN APPROVAL OF THE NAVAL SEA SYSTEMS COMMAND.

DISTRIBUTION STATEMENT C: DISTRIBUTION AUTHORIZED TO U.S. GOVERNMENT AGENCIES AND THEIR CONTRACTORS: OTHER REQUESTS MUST BE REFERRED TO COMNAVSEA OR THE COGNIZANT NAVSEA CODE.

WARNING: THIS DOCUMENT CONTAINS TECHNICAL DATA WHOSE EXPORT IS RESTRICTED BY THE ARMS EXPORT CONTROL ACT (TITLE 22, U.S.C. SEC. 2751 ET SEQ.) OR EXECUTIVE ORDER 12470. VIOLATIONS OF THESE EXPORT LAWS ARE SUBJECT TO SEVERE CRIMINAL PENALTIES.

DESTRUCTION NOTICE: DESTROY BY ANY METHOD THAT WILL PREVENT DISCLOSURE OF CONTENTS OR RECONSTRUCTION OF THE DOCUMENT.

REVISIONS				
ZONE	LTR	DESCRIPTION	DATE	APPROVED

NOTES:

1. STOCK SIZE IN REMARKS COLUMN OF PARTS LIST IS NOMINAL WITHOUT MANUFACTURING ALLOWANCE.
2. BRAZE PC 1 AND PC 2 PER NAVSEA S9074-AQ-GIB-010/248 USING THE DIFFUSION BRAZING PROCESS WITH QQ-B-654, BAg-4 BRAZING ALLOY.
3. OUTER RING SURFACE TO BE FREE OF BRAZING ALLOY.

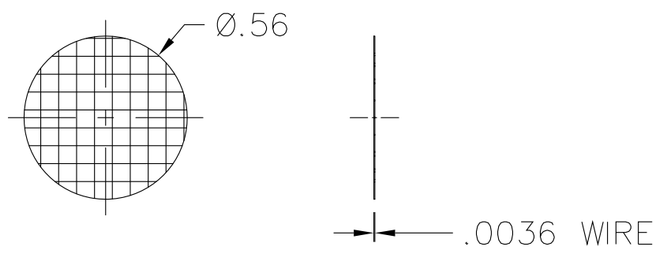

DETAIL OF PC 2

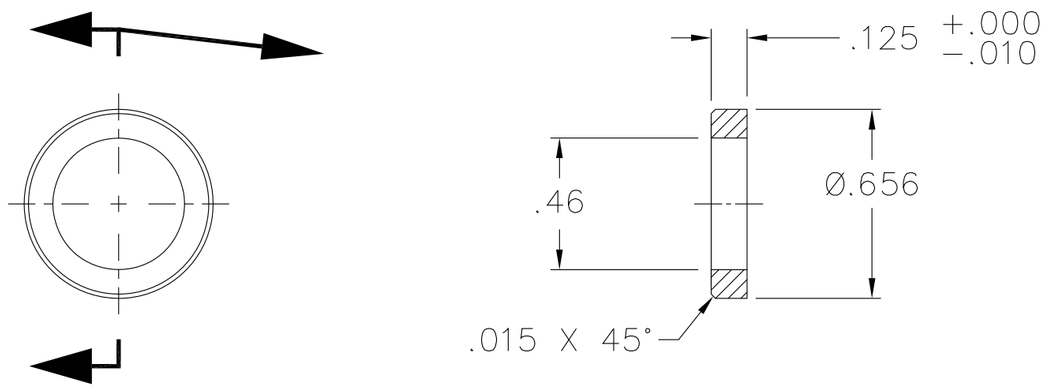

DETAIL OF PC 1

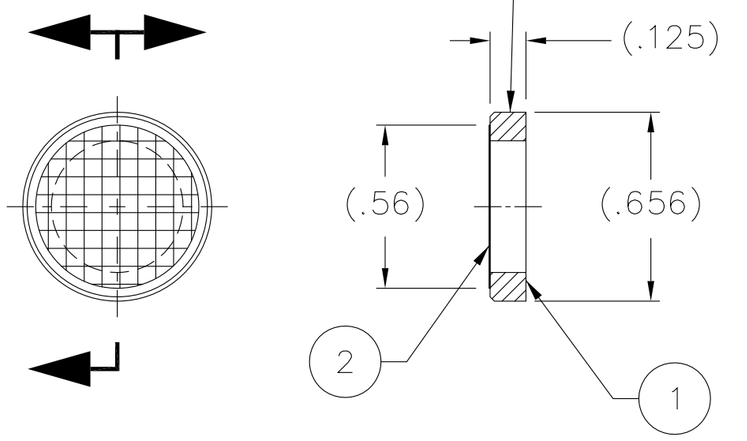

PART OR IDENTIFYING NO.	QTY REQD	CODE IDENT NO.	DRAWING OR SPECIFICATION	NOMENCLATURE OR DESCRIPTION	REMARKS
2	1	–	ASTM E2016	WOVEN WIRE CLOTH, SQ PATTERN	120 MESH, 9/16 DIA
1	1	–	–	ROUND BAR	21/32 DIA X 1/8

PARTS LIST

DISTRIBUTION STATEMENT C: DISTRIBUTION AUTHORIZED TO U.S. GOVERNMENT AGENCIES AND THEIR CONTRACTORS; OTHER REQUESTS MUST BE REFERRED TO COMNAVSEA OR THE COGNIZANT NAVSEA CODE.

WARNING: THIS DOCUMENT CONTAINS TECHNICAL DATA WHOSE EXPORT IS RESTRICTED BY THE ARMS EXPORT CONTROL ACT (TITLE 22, U.S.C. SEC. 2751 ET SEQ.) OR EXECUTIVE ORDER 12470. VIOLATIONS OF THESE EXPORT LAWS ARE SUBJECT TO SEVERE CRIMINAL PENALTIES.

DESTRUCTION NOTICE: DESTROY BY ANY METHOD THAT WILL PREVENT DISCLOSURE OF CONTENTS OR RECONSTRUCTION OF THE DOCUMENT.

NOTICE OF CONFIGURATION CONTROL

THIS DRAWING DEFINES AN ITEM OF UNDERWAY REPLENISHMENT (UNREP) STANDARD HARDWARE. NO REVISION TO THIS DRAWING OR THE HARDWARE REPRESENTED BY IT IS AUTHORIZED WITHOUT THE WRITTEN APPROVAL OF THE NAVAL SEA SYSTEMS COMMAND.

APPLICATION	
NEXT ASSY	USED ON
8287504	8287500

MATERIAL:

PC 1
CRES TY 316
UNS S31600
PER ASTM A582

UNLESS OTHERWISE SPECIFIED:
ALL DIMENSIONS ARE IN INCHES
TOLERANCES: ANGLES± .5°
FRACTIONS±
DECIMALS
.xx± .02
.xxx± .005
BEND RADII
FILLETS & ROUNDS
125/
SURFACE FINISH √
BREAK ALL SHARP EDGES

INTERPRET DRAWING IN ACCORDANCE WITH STANDARDS PRESCRIBED IN ASME Y14.100

DO NOT SCALE THIS DRAWING

PREPARED	AMSEC	06-07
CHECKED		
TECH LEAD		
BR HD		
ACCEPTED BY NAVSEA	(SIGNATURE DOES NOT DENOTE APPROVAL)	
APPROVED FOR NAVSEA	(SIGN ONLY IF ENGINEERING HAS BEEN "PROVED" BY MANUFACTURE AND TEST)	

PORT HUENEME DIVISION
NAVAL SURFACE WARFARE CENTER
4363 MISSILE WAY
PORT HUENEME, CA 93043-4307

DEPARTMENT OF THE NAVY
NAVAL SEA SYSTEMS COMMAND
WASHINGTON, D.C. 20376-5160

HEAVY UNREP – NAVY STANDARD
RAM TENSIONER

HAND PUMP SCREEN

SIZE	CAGE CODE	NAVSEA DWG NO.	REV
C	53711	8287535	–

SCALE 2/1 | UNIT WT .1 LBS | SHEET 1 OF 1

8287535

NSWC 4120/4 (REV. 03-92)

NOTES:

1. STOCK SIZE IN REMARKS COLUMN OF PARTS LIST IS NOMINAL WITHOUT MANUFACTURING ALLOWANCE.
2. PASSIVATE IN ACCORDANCE WITH ASTM A967. PASSIVATION TREATMENT SHALL BE DETERMINED USING ASTM A967, FIGURE X1.1.
3. PAINT ALL SURFACES, EXCEPT THOSE NOTED "DO NOT PAINT" USING PROCEDURES AND MATERIALS SPECIFIED IN PC 2 USING SPECIAL PROCEDURE FOR RAM TENSIONERS.

REVISIONS

ZONE	LTR	DESCRIPTION	DATE	APPROVED

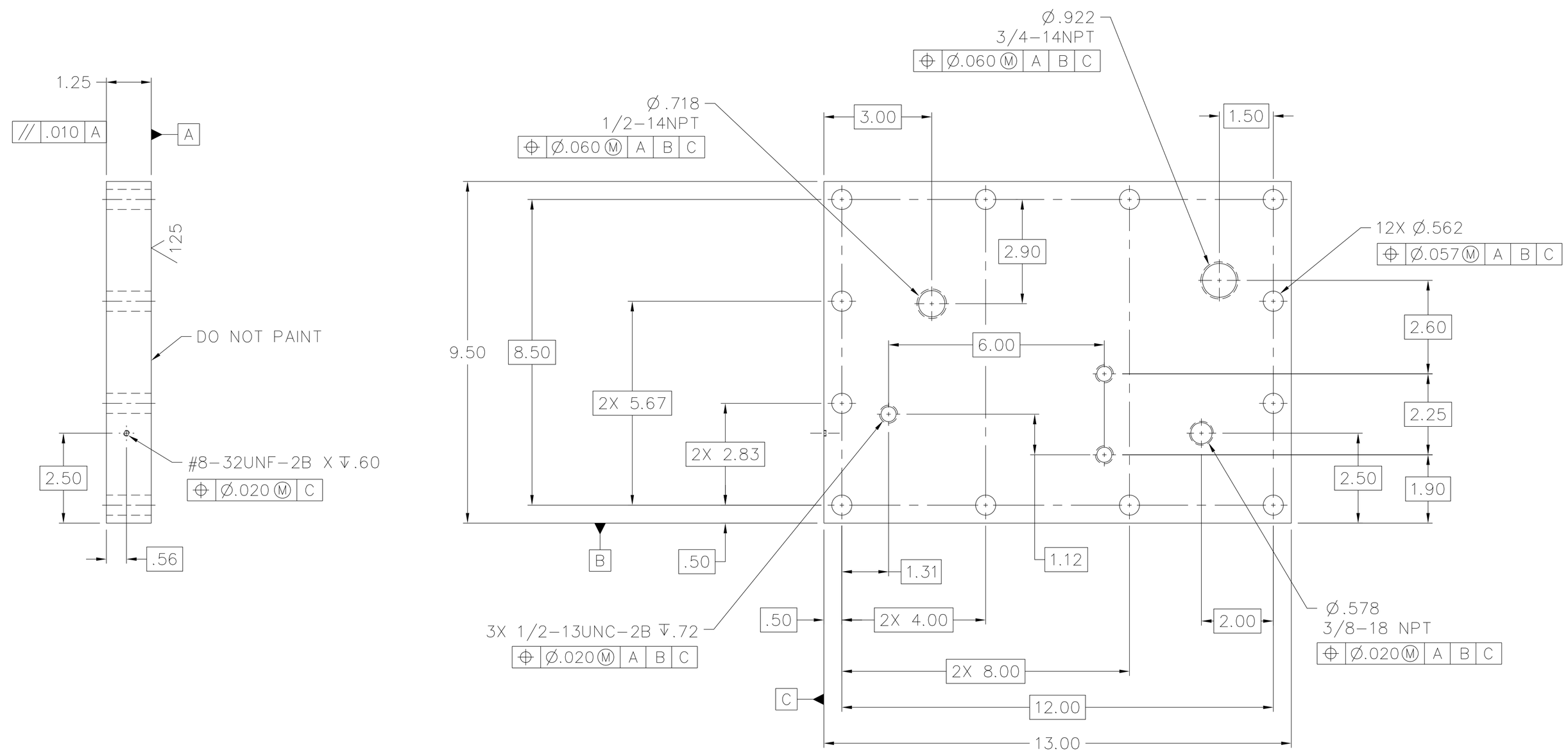

PART OR IDENTIFYING NO.	QTY REQD	CODE IDENT NO.	DRAWING OR SPECIFICATION	NOMENCLATURE OR DESCRIPTION	REMARKS
2	AR	53711	5210545	STD PAINT PROCEDURE-UNREP	SEE NOTE 3
1	1	–	–	PLATE	1-1/4 X 9 1/2 X 13

PARTS LIST

NOTICE OF CONFIGURATION CONTROL

THIS DRAWING DEFINES AN ITEM OF UNDERWAY REPLENISHMENT (UNREP) STANDARD HARDWARE. NO REVISION TO THIS DRAWING OR THE HARDWARE REPRESENTED BY IT IS AUTHORIZED WITHOUT THE WRITTEN APPROVAL OF THE NAVAL SEA SYSTEMS COMMAND.

DISTRIBUTION STATEMENT C: DISTRIBUTION AUTHORIZED TO U.S. GOVERNMENT AGENCIES AND THEIR CONTRACTORS; OTHER REQUESTS MUST BE REFERRED TO COMNAVSEA OR THE COGNIZANT NAVSEA CODE.

WARNING: THIS DOCUMENT CONTAINS TECHNICAL DATA WHOSE EXPORT IS RESTRICTED BY THE ARMS EXPORT CONTROL ACT (TITLE 22, U.S.C. SEC. 2751 ET SEQ.) OR EXECUTIVE ORDER 12470. VIOLATIONS OF THESE EXPORT LAWS ARE SUBJECT TO SEVERE CRIMINAL PENALTIES.

DESTRUCTION NOTICE: DESTROY BY ANY METHOD THAT WILL PREVENT DISCLOSURE OF CONTENTS OR RECONSTRUCTION OF THE DOCUMENT.

APPLICATION	
NEXT ASSY	USED ON
8287504	8287500

MATERIAL:
CRES
TY 316
PER ASTM A240

UNLESS OTHERWISE SPECIFIED:
ALL DIMENSIONS ARE IN INCHES
TOLERANCES: ANGLES±
FRACTIONS±
DECIMALS
.XX± .02
.XXX± .005
BEND RADII
FILLETS & ROUNDS
SURFACE FINISH 250/
BREAK ALL SHARP EDGES
INTERPRET DRAWING IN ACCORDANCE WITH STANDARDS PRESCRIBED IN ASME Y14.100
DO NOT SCALE THIS DRAWING

PREPARED	AMSEC	06-07
CHECKED		
TECH LEAD		
BR HD		
ACCEPTED BY NAVSEA	(SIGNATURE DOES NOT DENOTE APPROVAL)	
APPROVED FOR NAVSEA	(SIGN ONLY IF ENGINEERING HAS BEEN "PROVED" BY MANUFACTURE AND TEST)	

PORT HUENEME DIVISION
NAVAL SURFACE WARFARE CENTER
4363 MISSILE WAY
PORT HUENEME, CA 93043-4307

DEPARTMENT OF THE NAVY
NAVAL SEA SYSTEMS COMMAND
WASHINGTON, D.C. 20376-5160

HEAVY UNREP – NAVY STANDARD
RAM TENSIONER

SUPPLY TANK COVER

SIZE	CAGE CODE	NAVSEA DWG NO.	REV
D	53711	8287536	–

SCALE 1/2 | UNIT WT 34.0 LBS | SHEET 1 OF 1

8287536

NSWC 4120/8 (REV. 03-92)

NOTES:

1. PASSIVATE IN ACCORDANCE WITH ASTM A967. PASSIVATION TREATMENT SHALL BE DETERMINED USING ASTM A967, FIGURE X1.1.

2. PAINT ALL EXTERIOR SURFACES, EXCEPT THOSE NOTED "DO NOT PAINT" USING PROCEDURES AND MATERIALS SPECIFIED IN PC 2 USING SPECIAL PROCEDURE FOR STAINLESS STEEL RAM TENSIONER PARTS.

REVISIONS

ZONE	LTR	DESCRIPTION	DATE	APPROVED

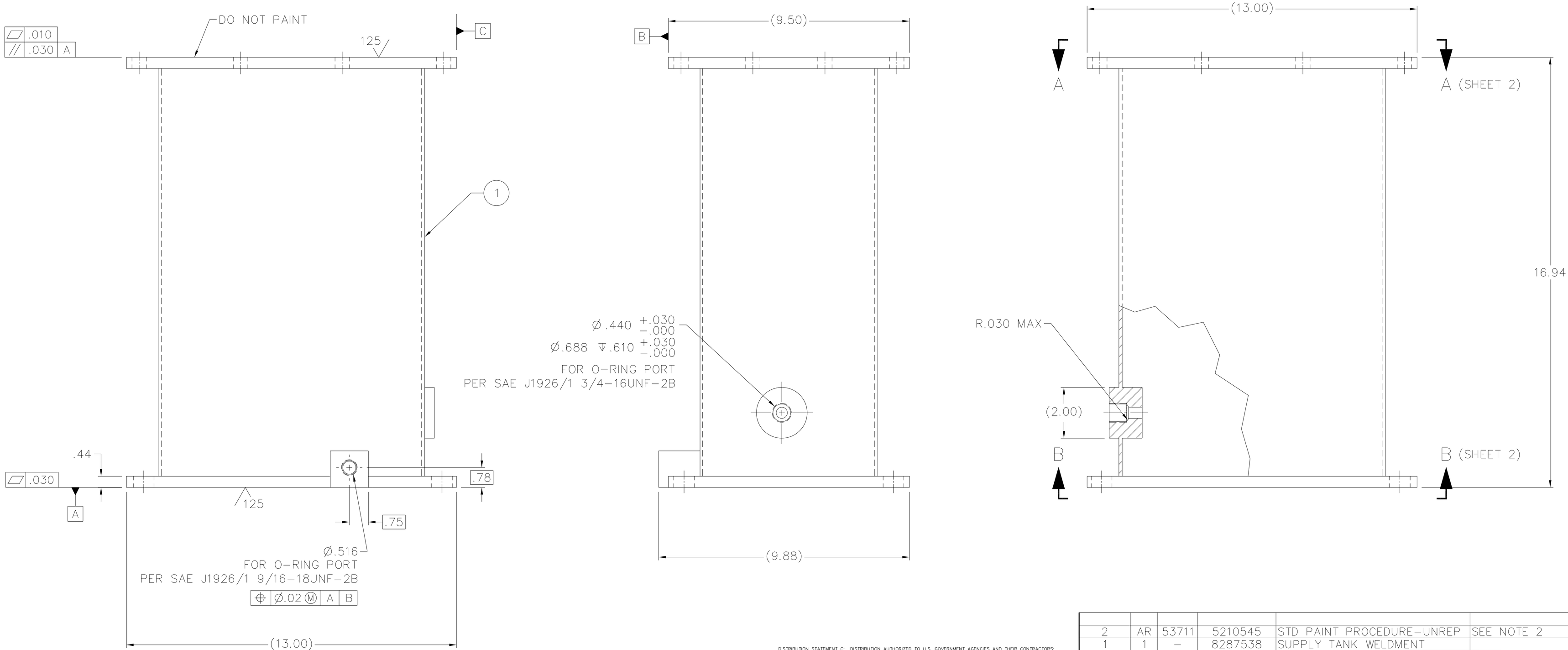

DISTRIBUTION STATEMENT C: DISTRIBUTION AUTHORIZED TO U.S. GOVERNMENT AGENCIES AND THEIR CONTRACTORS; OTHER REQUESTS MUST BE REFERRED TO COMNAVSEA OR THE COGNIZANT NAVSEA CODE.

WARNING: THIS DOCUMENT CONTAINS TECHNICAL DATA WHOSE EXPORT IS RESTRICTED BY THE ARMS EXPORT CONTROL ACT (TITLE 22, U.S.C. SEC. 2751 ET SEQ.) OR EXECUTIVE ORDER 12470. VIOLATIONS OF THESE EXPORT LAWS ARE SUBJECT TO SEVERE CRIMINAL PENALTIES.

DESTRUCTION NOTICE: DESTROY BY ANY METHOD THAT WILL PREVENT DISCLOSURE OF CONTENTS OR RECONSTRUCTION OF THE DOCUMENT.

PART OR IDENTIFYING NO.	QTY REQD	CODE IDENT NO.	DRAWING OR SPECIFICATION	NOMENCLATURE OR DESCRIPTION	REMARKS
2	AR	53711	5210545	STD PAINT PROCEDURE-UNREP	SEE NOTE 2
1	1	–	8287538	SUPPLY TANK WELDMENT	

PARTS LIST

NOTICE OF CONFIGURATION CONTROL

THIS DRAWING DEFINES AN ITEM OF UNDERWAY REPLENISHMENT (UNREP) STANDARD HARDWARE. NO REVISION TO THIS DRAWING OR THE HARDWARE REPRESENTED BY IT IS AUTHORIZED WITHOUT THE WRITTEN APPROVAL OF THE NAVAL SEA SYSTEMS COMMAND.

APPLICATION	
NEXT ASSY	USED ON
8287504	8287500

6	5	4	3	2	1
				–	–

SHEET NUMBER

REVISION STATUS OF SHEETS

MATERIAL:

UNLESS OTHERWISE SPECIFIED:
ALL DIMENSIONS ARE IN INCHES
TOLERANCES: ANGLES±
FRACTIONS±
DECIMALS
.XX± .02
.XXX± .005
BEND RADII
FILLETS & ROUNDS 250/
SURFACE FINISH √
BREAK ALL SHARP EDGES
INTERPRET DRAWING IN ACCORDANCE WITH STANDARDS PRESCRIBED IN ASME Y14.100
DO NOT SCALE THIS DRAWING

PORT HUENEME DIVISION
NAVAL SURFACE WARFARE CENTER
4363 MISSILE WAY
PORT HUENEME, CA 93043-4307

PREPARED	AMSEC	06-07
CHECKED		
TECH LEAD		
BR HD		
ACCEPTED BY NAVSEA	(SIGNATURE DOES NOT DENOTE APPROVAL)	
APPROVED FOR NAVSEA	(SIGN ONLY IF ENGINEERING HAS BEEN "PROVED" BY MANUFACTURE AND TEST)	

DEPARTMENT OF THE NAVY
NAVAL SEA SYSTEMS COMMAND
WASHINGTON, D.C. 20376-5160

HEAVY UNREP – NAVY STANDARD
RAM TENSIONER

SUPPLY TANK

SIZE	CAGE CODE	NAVSEA DWG NO.	REV
D	53711	8287537	–

SCALE 1/2 | UNIT WT 45.5 LBS | SHEET 1 OF 2

8287537

NSWC 4120/8 (REV 03-92)

REVISIONS				
ZONE	LTR	DESCRIPTION	DATE	APPROVED

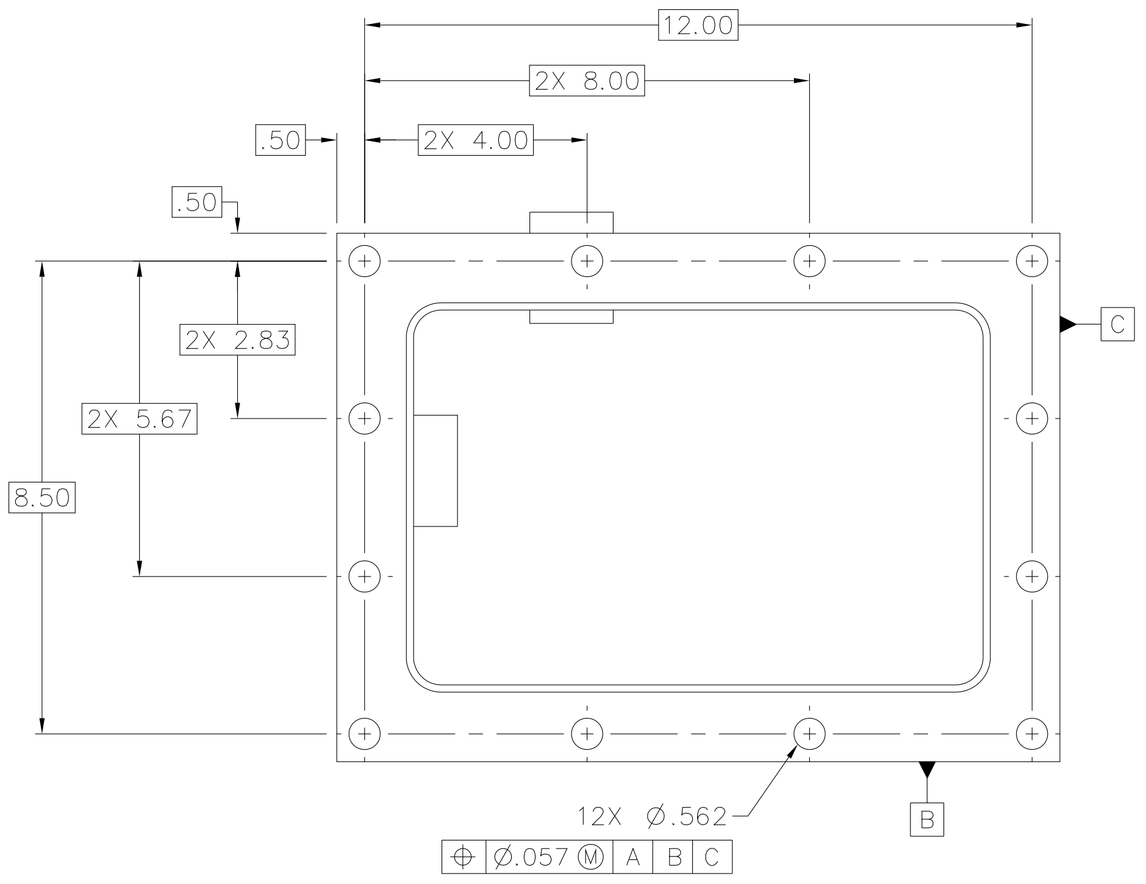

VIEW A–A

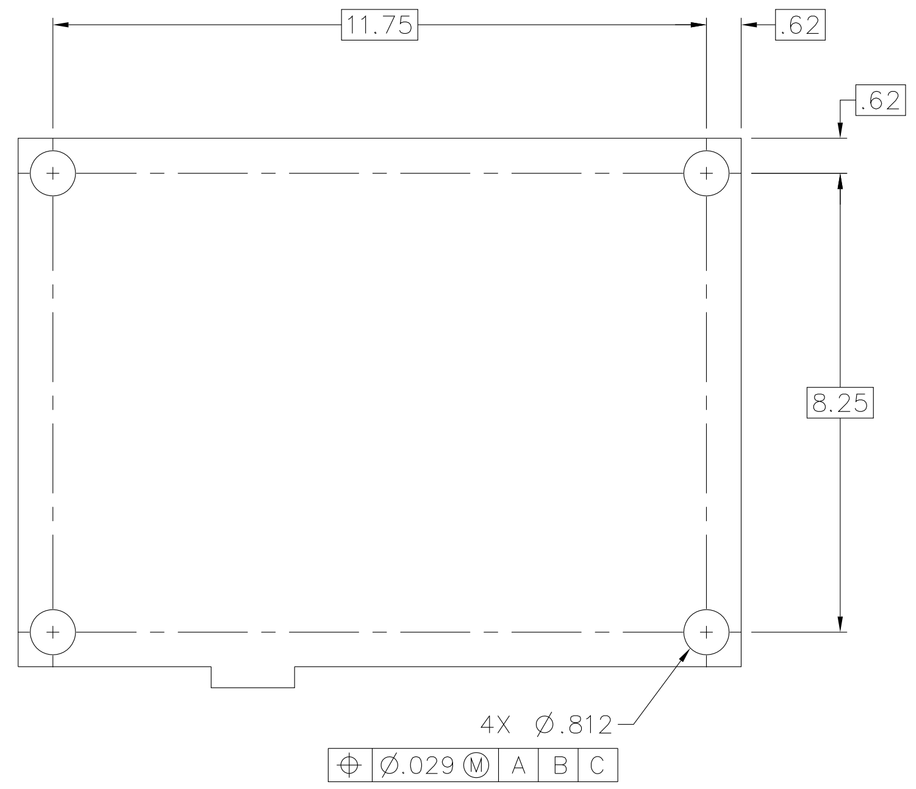

VIEW B–B

8287537

SIZE	CAGE CODE	NAVSEA DWG NO.	REV
D	53711	8287537	–
SCALE 1/2	UNIT WT ———	SHEET 2	

NSWC 4120/8 (REV 03-92)

NOTES:

1. STOCK SIZE IN REMARKS COLUMN OF PARTS LIST IS NOMINAL WITHOUT MANUFACTURING ALLOWANCE.

2. WELDING REQUIREMENTS:

2.1 FABRICATION, WELDING, STRESS RELIEF AND INSPECTION SHALL BE IN ACCORDANCE WITH NAVSEA S9074-AR-GIB-010/278 AND T9074-AS-GIB-010/271, CLASS M-2, CATEGORY C AND REQUIRE VISUAL INSPECTION ONLY.

2.2 UNLESS OTHERWISE SPECIFIED ON THIS DRAWING, ALL DIMENSIONS AND TOLERANCES REFER TO FINISHED PRODUCT.

3. WELDMENT MAY BE STRAIGHTENED IF REQUIRED TO MEET DIMENSIONAL REQUIREMENTS ON THE FACE OF DRAWING.

REVISIONS

ZONE	LTR	DESCRIPTION	DATE	APPROVED

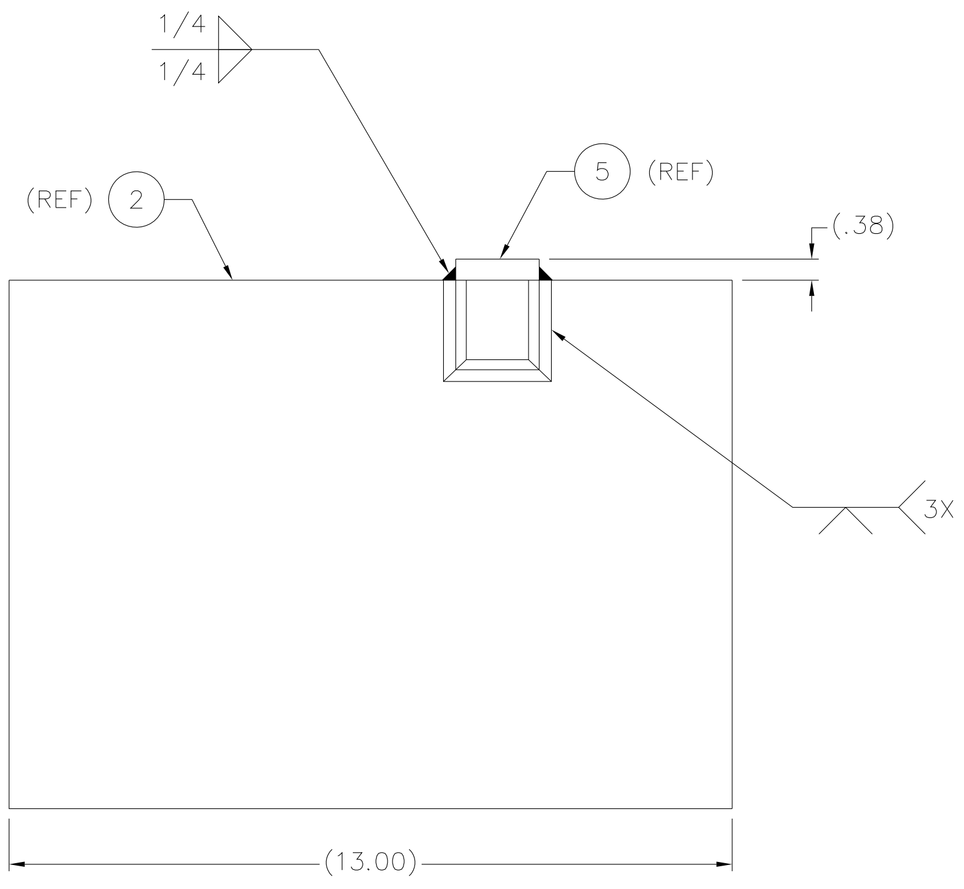

VIEW A-A

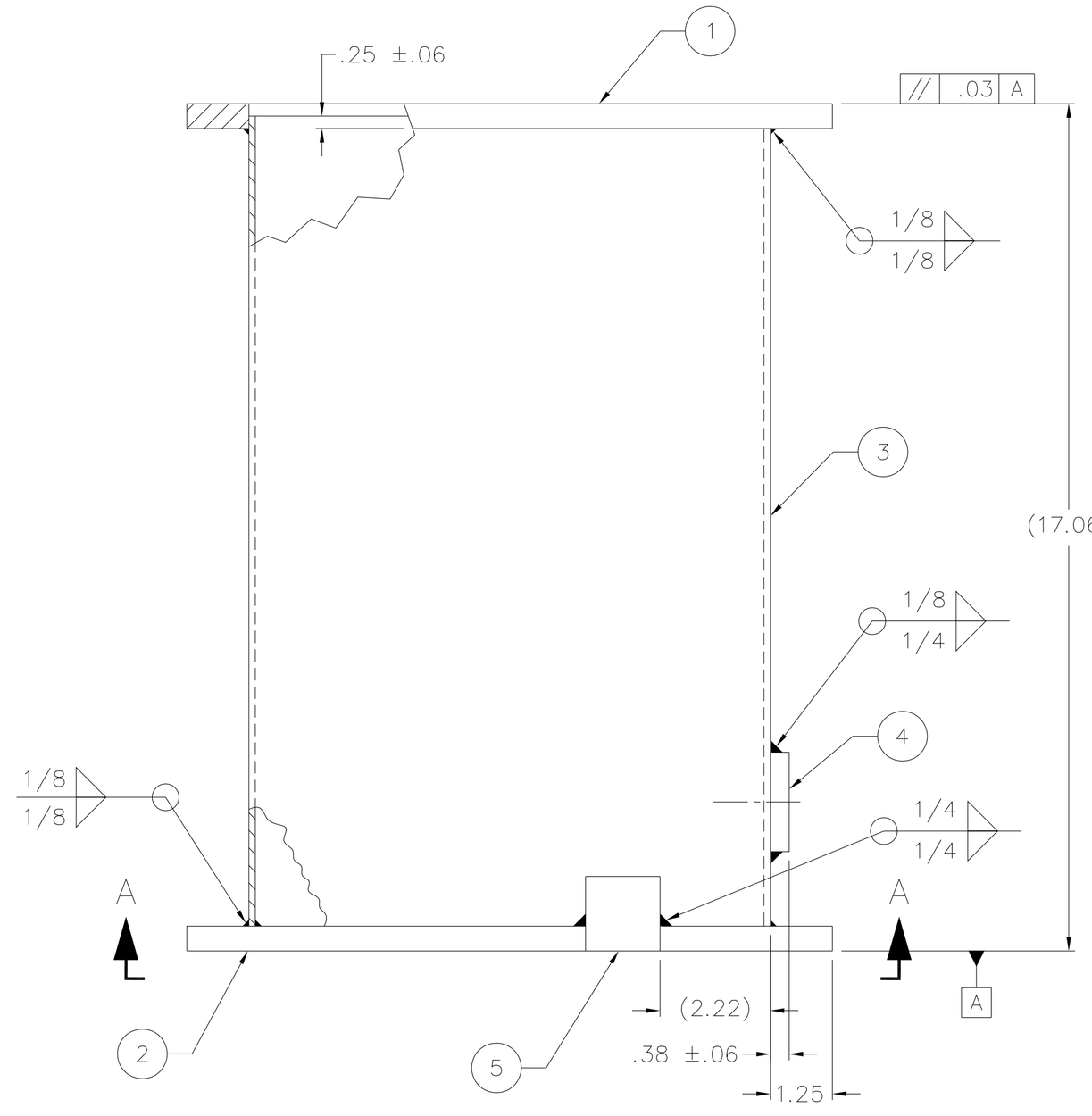

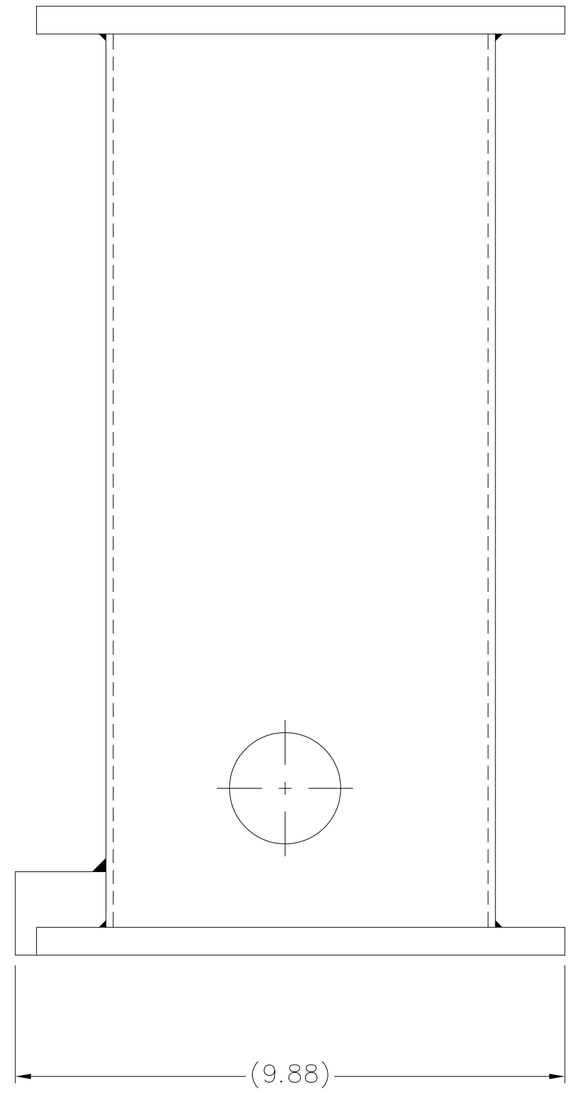

PART OR IDENTIFYING NO.	QTY REQD	CODE IDENT NO.	DRAWING OR SPECIFICATION	NOMENCLATURE OR DESCRIPTION	REMARKS
5	1	–	–	SQUARE BAR	1 1/2 X 1 1/2 X 2
4	1	–	–	ROUND BAR	2 DIA X 1 5/16
3	1	–	–	SHEET	1/8 X 16 5/16 X 33 15/16
2	1	–	–	PLATE	1/2 X 9 1/2 X 13
1	1	–	–	PLATE	1/2 X 9 1/2 X 13

PARTS LIST

DISTRIBUTION STATEMENT C: DISTRIBUTION AUTHORIZED TO U.S. GOVERNMENT AGENCIES AND THEIR CONTRACTORS; OTHER REQUESTS MUST BE REFERRED TO COMNAVSEA OR THE COGNIZANT NAVSEA CODE.

WARNING: THIS DOCUMENT CONTAINS TECHNICAL DATA WHOSE EXPORT IS RESTRICTED BY THE ARMS EXPORT CONTROL ACT (TITLE 22, U.S.C. SEC. 2751 ET SEQ.) OR EXECUTIVE ORDER 12470. VIOLATIONS OF THESE EXPORT LAWS ARE SUBJECT TO SEVERE CRIMINAL PENALTIES.

DESTRUCTION NOTICE: DESTROY BY ANY METHOD THAT WILL PREVENT DISCLOSURE OF CONTENTS OR RECONSTRUCTION OF THE DOCUMENT.

NOTICE OF CONFIGURATION CONTROL

THIS DRAWING DEFINES AN ITEM OF UNDERWAY REPLENISHMENT (UNREP) STANDARD HARDWARE. NO REVISION TO THIS DRAWING OR THE HARDWARE REPRESENTED BY IT IS AUTHORIZED WITHOUT THE WRITTEN APPROVAL OF THE NAVAL SEA SYSTEMS COMMAND.

6	5	4	3	2	1
				–	–

SHEET NUMBER

REVISION STATUS OF SHEETS

APPLICATION	
NEXT ASSY	USED ON
8287537	8287500

MATERIAL:
CRES
TY 316L
PC 1-3
PER ASTM A240
PC 4, 5
PER ASTM A276

UNLESS OTHERWISE SPECIFIED:
ALL DIMENSIONS ARE IN INCHES
TOLERANCES: ANGLES± .5°
FRACTIONS±
DECIMALS
.XX± .02
.XXX±
BEND RADII
FILLETS & ROUNDS .250/
SURFACE FINISH √
BREAK ALL SHARP EDGES

INTERPRET DRAWING IN ACCORDANCE WITH STANDARDS PRESCRIBED IN ASME Y14.100

DO NOT SCALE THIS DRAWING

PORT HUENEME DIVISION
NAVAL SURFACE WARFARE CENTER
4363 MISSILE WAY
PORT HUENEME, CA 93043-4307

PREPARED	AMSEC	06-07
CHECKED		
TECH LEAD		
BR HD		
ACCEPTED BY NAVSEA	(SIGNATURE DOES NOT DENOTE APPROVAL)	
APPROVED FOR NAVSEA	(SIGN ONLY IF ENGINEERING HAS BEEN "PROVED" BY MANUFACTURE AND TEST)	

DEPARTMENT OF THE NAVY
NAVAL SEA SYSTEMS COMMAND
WASHINGTON, D.C. 20376-5160

HEAVY UNREP – NAVY STANDARD
RAM TENSIONER

SUPPLY TANK WELDMENT

SIZE	CAGE CODE	NAVSEA DWG NO.	REV
D	53711	8287538	–

SCALE 1/2 | UNIT WT 46.0 LBS | SHEET 1 OF 2

8287538

NSWC 4120/8 (REV 03-92)

REVISIONS				
ZONE	LTR	DESCRIPTION	DATE	APPROVED

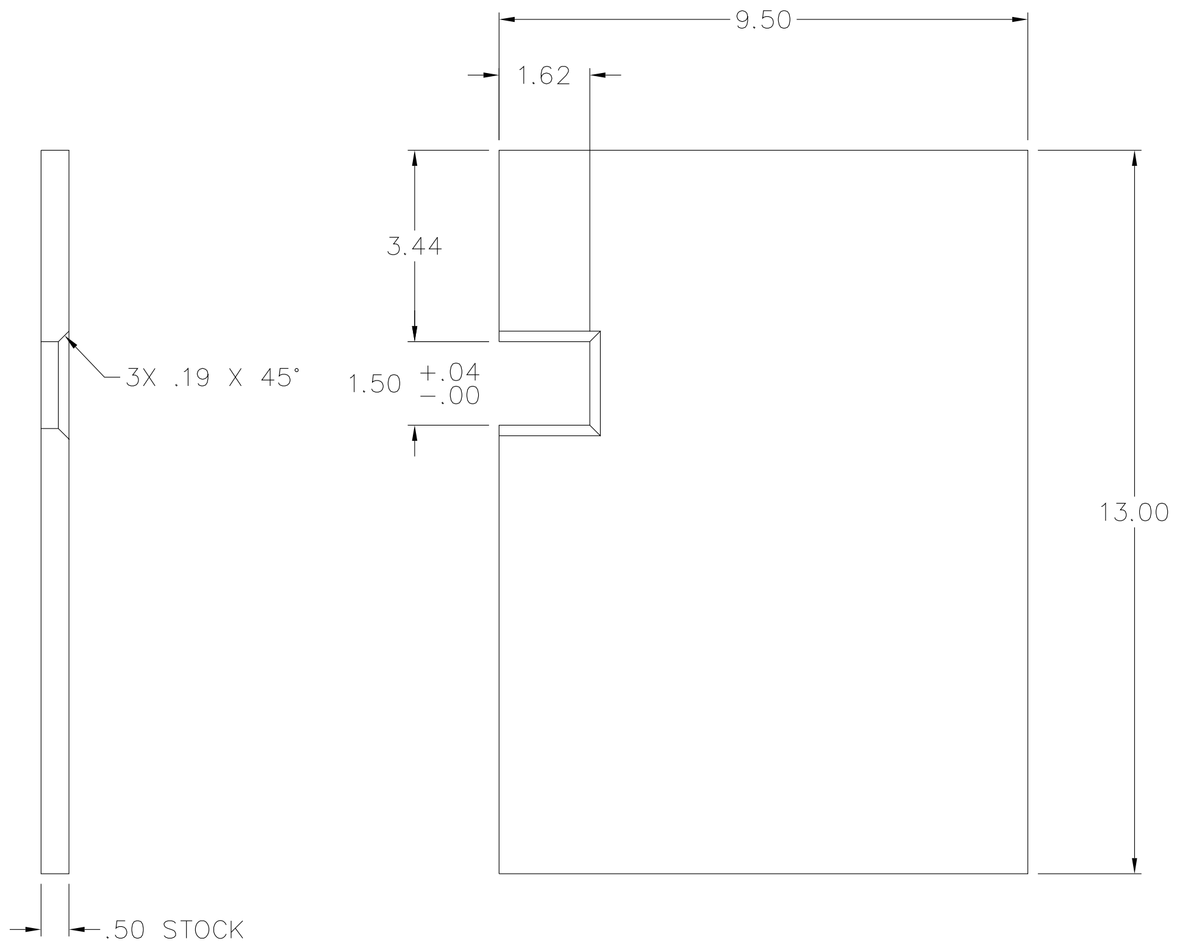

DETAIL OF PC 2

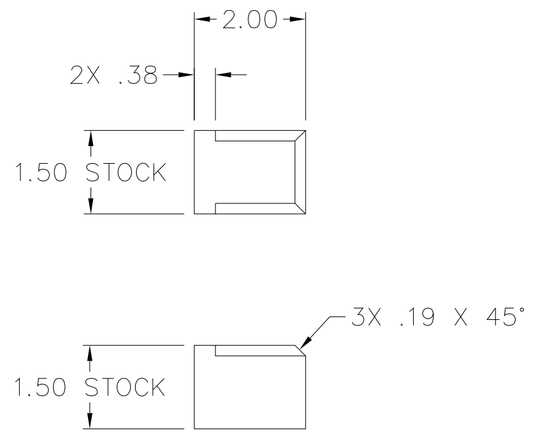

DETAIL OF PC 5

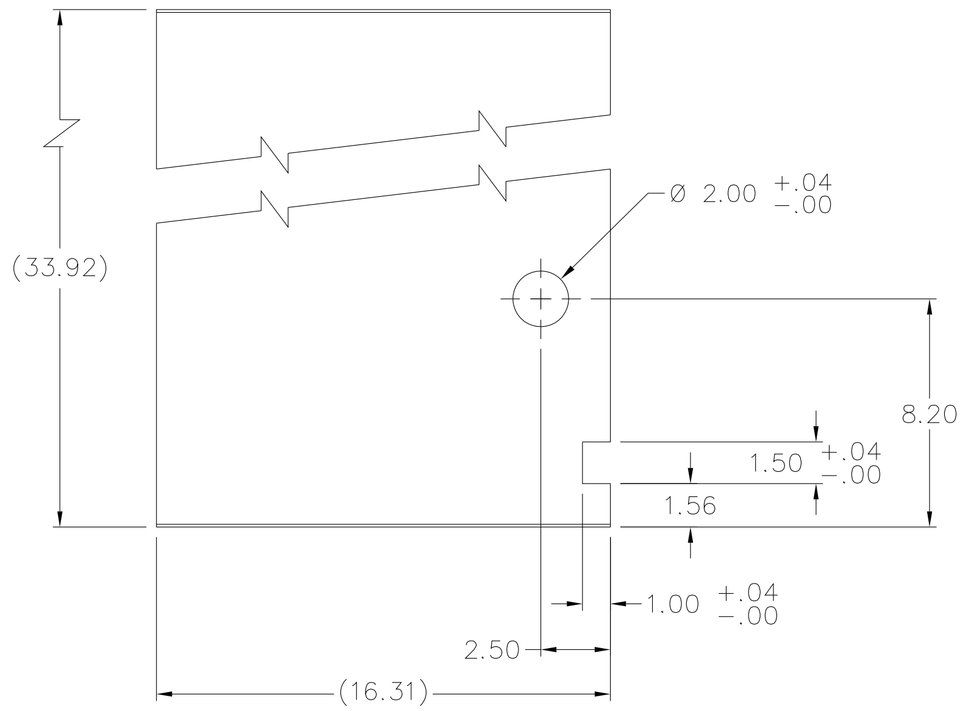

PC 3 FLAT PATTERN
SCALE: 1/4

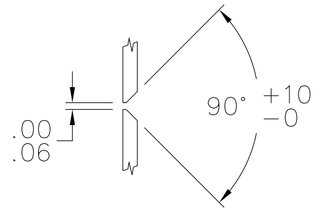

DETAIL B
SCALE: 1/1

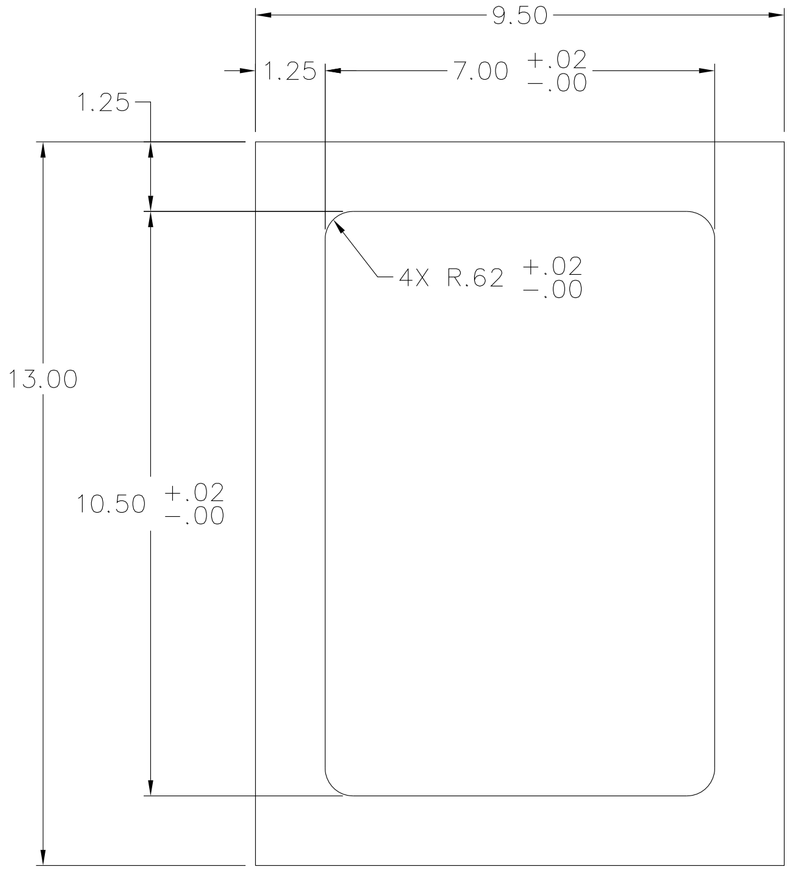

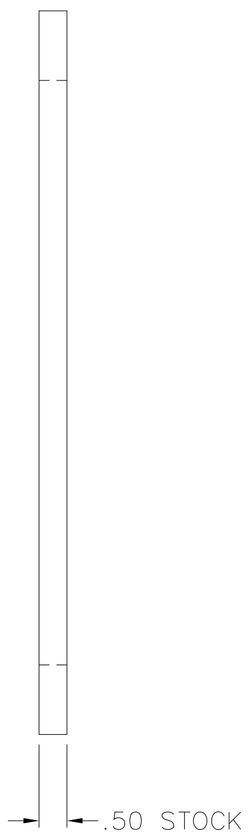

DETAIL OF PC 1

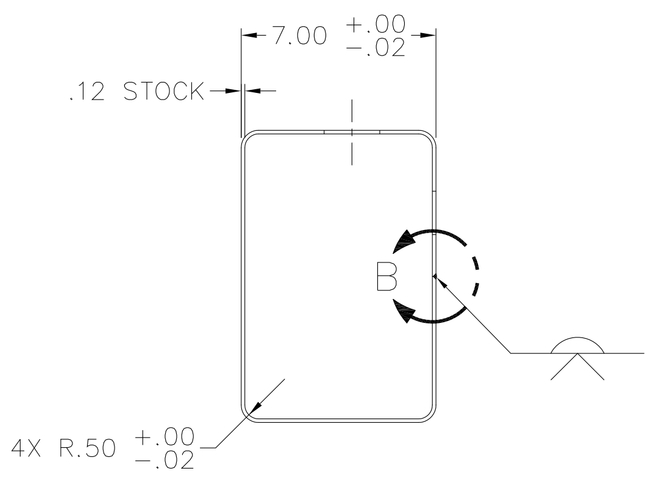

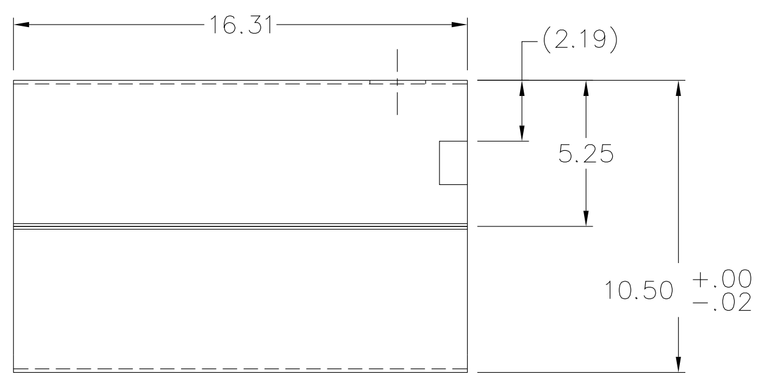

DETAIL OF PC 3
SCALE: 1/4

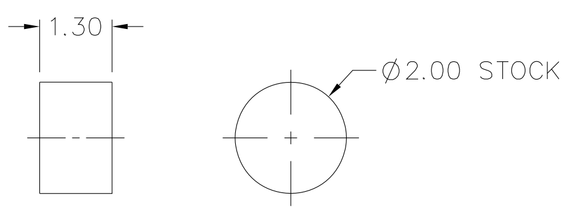

DETAIL OF PC 4

8287538

SIZE	CAGE CODE	NAVSEA DWG NO.	REV
D	53711	8287538	—
SCALE 1/2 & AS NOTED	UNIT WT ——	SHEET 2	

NSWC 4120/8 (REV 03-92)

REVISIONS				
ZONE	LTR	DESCRIPTION	DATE	APPROVED

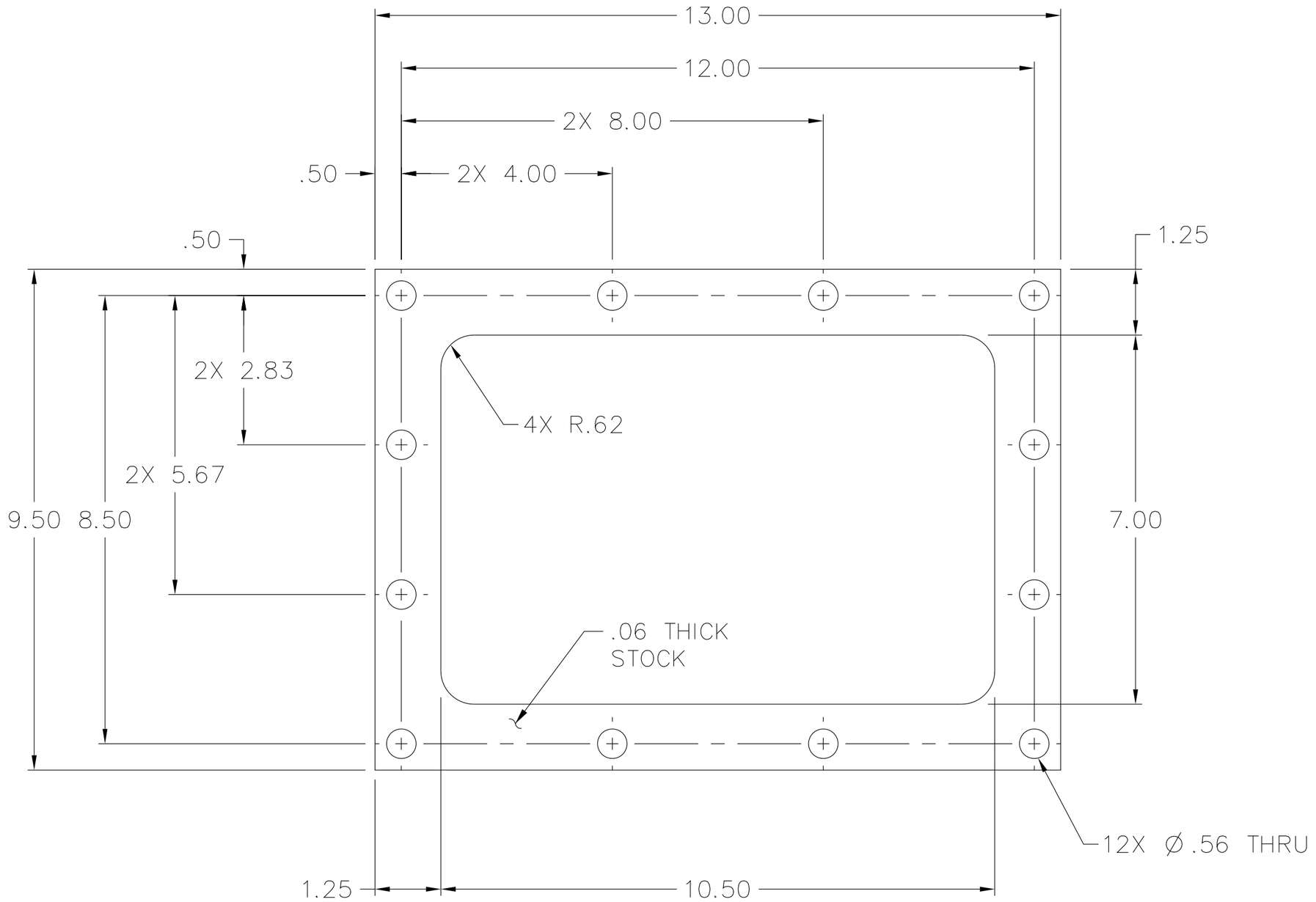

8287539 -

DISTRIBUTION STATEMENT C: DISTRIBUTION AUTHORIZED TO U.S. GOVERNMENT AGENCIES AND THEIR CONTRACTORS; OTHER REQUESTS MUST BE REFERRED TO COMNAVSEA OR THE COGNIZANT NAVSEA CODE.

WARNING: THIS DOCUMENT CONTAINS TECHNICAL DATA WHOSE EXPORT IS RESTRICTED BY THE ARMS EXPORT CONTROL ACT (TITLE 22, U.S.C. SEC. 2751 ET SEQ.) OR EXECUTIVE ORDER 12470. VIOLATIONS OF THESE EXPORT LAWS ARE SUBJECT TO SEVERE CRIMINAL PENALTIES.

DESTRUCTION NOTICE: DESTROY BY ANY METHOD THAT WILL PREVENT DISCLOSURE OF CONTENTS OR RECONSTRUCTION OF THE DOCUMENT.

PART OR IDENTIFYING NO.	QTY REQD	CODE IDENT NO.	DRAWING OR SPECIFICATION	NOMENCLATURE OR DESCRIPTION	REMARKS

PARTS LIST

NOTICE OF CONFIGURATION CONTROL

THIS DRAWING DEFINES AN ITEM OF UNDERWAY REPLENISHMENT (UNREP) STANDARD HARDWARE. NO REVISION TO THIS DRAWING OR THE HARDWARE REPRESENTED BY IT IS AUTHORIZED WITHOUT THE WRITTEN APPROVAL OF THE NAVAL SEA SYSTEMS COMMAND.

APPLICATION	
NEXT ASSY	USED ON
8287504	8287500

MATERIAL:

ETHYLENE-PROPYLENE
ELASTOMERIC COMPOUND
MIL-DTL-22050
GRADE 1

UNLESS OTHERWISE SPECIFIED:
ALL DIMENSIONS ARE IN INCHES
TOLERANCES: ANGLES±
FRACTIONS±
DECIMALS
.XX± .02
.XXX±
BEND RADII
FILLETS & ROUNDS
SURFACE FINISH √
BREAK ALL SHARP EDGES

INTERPRET DRAWING IN ACCORDANCE WITH STANDARDS PRESCRIBED IN ASME Y14.100

DO NOT SCALE THIS DRAWING

PORT HUENEME DIVISION
NAVAL SURFACE WARFARE CENTER
4363 MISSILE WAY
PORT HUENEME, CA 93043-4307

PREPARED	AMSEC	06-07
CHECKED		
TECH LEAD		
BR HD		
ACCEPTED BY NAVSEA		(SIGNATURE DOES NOT DENOTE APPROVAL)
APPROVED FOR NAVSEA		(SIGN ONLY IF ENGINEERING HAS BEEN "PROVED" BY MANUFACTURE AND TEST)

DEPARTMENT OF THE NAVY
NAVAL SEA SYSTEMS COMMAND
WASHINGTON, D.C. 20376-5160

NAVY STANDARD HEAVY UNREP
RAM TENSIONER

SUPPLY TANK GASKET

SIZE	CAGE CODE	NAVSEA DWG NO.	REV
C	53711	8287539	—

SCALE 1/2 | UNIT WT .2 LBS | SHEET 1 OF 1

NSWC 4120/4 (REV. 03-92)

REVISIONS				
ZONE	LTR	DESCRIPTION	DATE	APPROVED

NOTES:

1. STOCK SIZE IN REMARKS COLUMN OF PARTS LIST IS NOMINAL WITHOUT MANUFACTURING ALLOWANCE.

2. WELDING REQUIREMENTS:

2.1 FABRICATION, WELDING, STRESS RELIEF AND INSPECTION SHALL BE IN ACCORDANCE WITH NAVSEA S9074-AR-GIB-010/278 AND T9074-AS-GIB-010/271, CLASS M-2, CATEGORY C AND REQUIRE VISUAL INSPECTION ONLY.

2.2 WELDMENT MAY BE STRAIGHTENED IF REQUIRED TO MEET DIMENSIONAL REQUIREMENTS ON THE FACE OF DRAWING.

3. UNLESS OTHERWISE SPECIFIED ON THIS DRAWING, ALL DIMENSIONS AND TOLERANCES REFER TO FINISHED PRODUCT.

4. PASSIVATE IN ACCORDANCE WITH ASTM A967. PASSIVATION TREATMENT SHALL BE DETERMINED USING ASTM A967, FIGURE X1.1.

5. SCRIBE OR ENGRAVE LETTERS .12 INCH HIGH BY .006 INCH DEEP ADJACENT TO THE CIRCULAR LINES AS SHOWN.

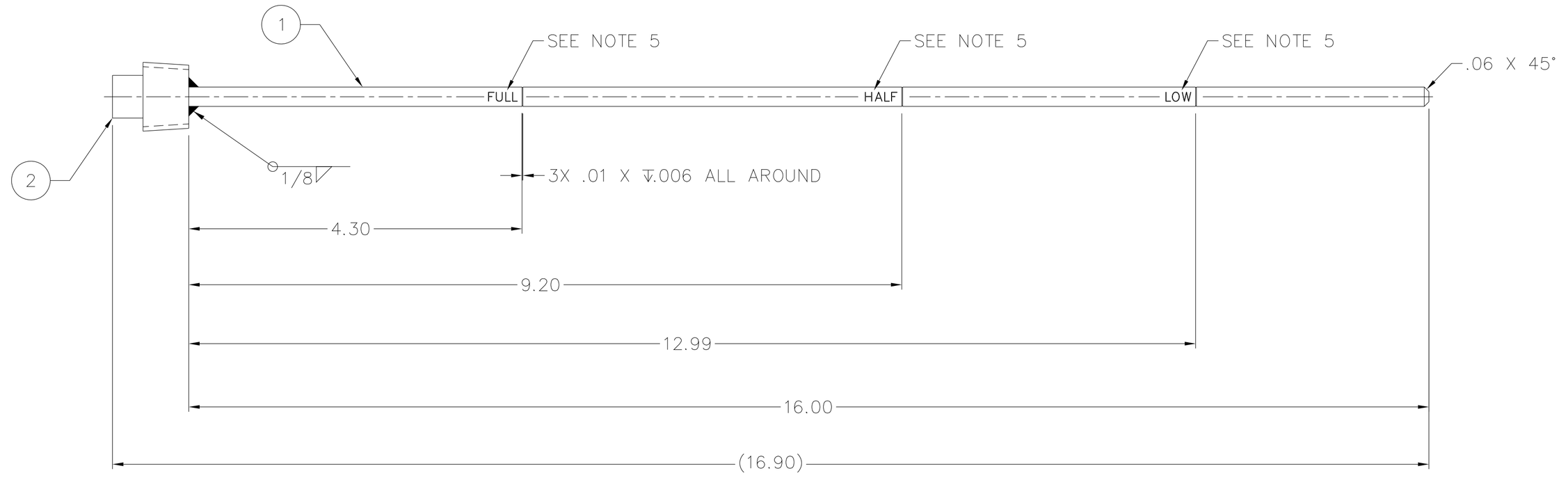

PART OR IDENTIFYING NO.	QTY REQD	CODE IDENT NO.	DRAWING OR SPECIFICATION	NOMENCLATURE OR DESCRIPTION	REMARKS
2	1	–	AS4863K04K	SQUARE HD PLUG	1/2 NPT MALE
1	1	–	–	ROUND BAR	1/4 DIA X 16 LG

PARTS LIST

APPLICATION	
NEXT ASSY	USED ON
8287504	8287500
8287505	

MATERIAL:
PC 1
CRES
TY 316L
PER ASTM A276

PC 2
CRES
TY 316

UNLESS OTHERWISE SPECIFIED:
ALL DIMENSIONS ARE IN INCHES
TOLERANCES: ANGLES± .5°
FRACTIONS±
DECIMALS
.XX± .02
.XXX±
BEND RADII
FILLETS & ROUNDS
SURFACE FINISH √
BREAK ALL SHARP EDGES
INTERPRET DRAWING IN ACCORDANCE WITH STANDARDS PRESCRIBED IN ASME Y14.100
DO NOT SCALE THIS DRAWING

PORT HUENEME DIVISION
NAVAL SURFACE WARFARE CENTER
4363 MISSILE WAY
PORT HUENEME, CA 93043-4307

PREPARED	AMSEC	06-07
CHECKED		
TECH LEAD		
BR HD		
ACCEPTED BY NAVSEA	(SIGNATURE DOES NOT DENOTE APPROVAL)	
APPROVED FOR NAVSEA	(SIGN ONLY IF ENGINEERING HAS BEEN "PROVED" BY MANUFACTURE AND TEST)	

DEPARTMENT OF THE NAVY
NAVAL SEA SYSTEMS COMMAND
WASHINGTON, D.C. 20376-5160

HEAVY UNREP – NAVY STANDARD
RAM TENSIONER

TANK DIPSTICK

SIZE	CAGE CODE	NAVSEA DWG NO.	REV
D	53711	8287541	–

SCALE 1/1 | UNIT WT .4 LBS | SHEET 1 OF 1

8287541

NOTICE OF CONFIGURATION CONTROL

THIS DRAWING DEFINES AN ITEM OF UNDERWAY REPLENISHMENT (UNREP) STANDARD HARDWARE. NO REVISION TO THIS DRAWING OR THE HARDWARE REPRESENTED BY IT IS AUTHORIZED WITHOUT THE WRITTEN APPROVAL OF THE NAVAL SEA SYSTEMS COMMAND.

DISTRIBUTION STATEMENT C: DISTRIBUTION AUTHORIZED TO U.S. GOVERNMENT AGENCIES AND THEIR CONTRACTORS: OTHER REQUESTS MUST BE REFERRED TO COMNAVSEA OR THE COGNIZANT NAVSEA CODE.

WARNING: THIS DOCUMENT CONTAINS TECHNICAL DATA WHOSE EXPORT IS RESTRICTED BY THE ARMS EXPORT CONTROL ACT (TITLE 22, U.S.C. SEC. 2751 ET SEQ.) OR EXECUTIVE ORDER 12470. VIOLATIONS OF THESE EXPORT LAWS ARE SUBJECT TO SEVERE CRIMINAL PENALTIES.

DESTRUCTION NOTICE: DESTROY BY ANY METHOD THAT WILL PREVENT DISCLOSURE OF CONTENTS OR RECONSTRUCTION OF THE DOCUMENT.

NOTES:

1. STOCK SIZE IN REMARKS COLUMN OF PARTS LIST IS NOMINAL WITHOUT MANUFACTURING ALLOWANCE.
2. PASSIVATE IN ACCORDANCE WITH ASTM A967. PASSIVATION TREATMENT SHALL BE DETERMINED USING ASTM A967, FIGURE X1.1.
3. PAINT ALL SURFACES, EXCEPT THOSE NOTED "DO NOT PAINT", USING PROCEDURES AND MATERIALS SPECIFIED IN PC 2 USING SPECIAL PROCEDURE FOR STAINLESS STEEL RAM TENSIONER PARTS.

REVISIONS				
ZONE	LTR	DESCRIPTION	DATE	APPROVED

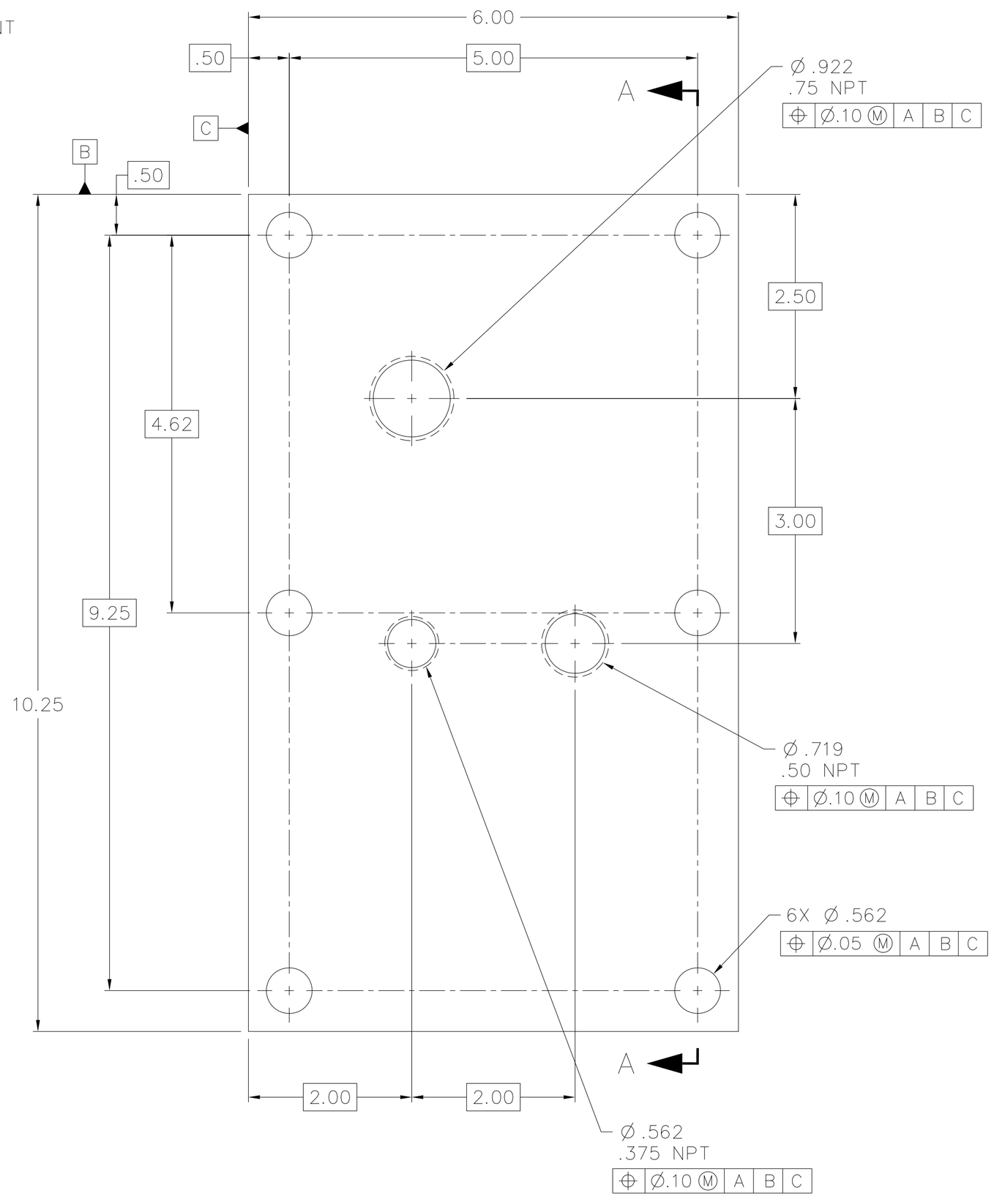

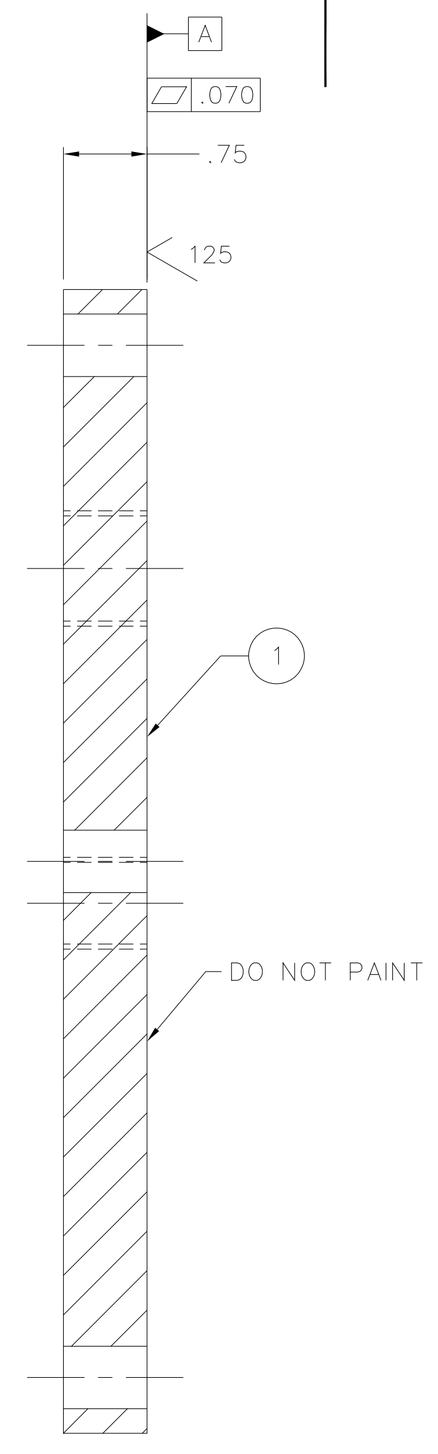

SECTION A–A

PART OR IDENTIFYING NO.	QTY REQD	CODE IDENT NO.	DRAWING OR SPECIFICATION	NOMENCLATURE OR DESCRIPTION	REMARKS
2	AR	53711	5210545	STD PAINT PROCEDURE–UNREP	SEE NOTE 3
1	1	–	–	PLATE	3/4 X 6 X 10 1/4

PARTS LIST

APPLICATION	
NEXT ASSY	USED ON
8287505	8287500

MATERIAL:
CRES
TY 316
PER ASTM A240

UNLESS OTHERWISE SPECIFIED:
ALL DIMENSIONS ARE IN INCHES
TOLERANCES: ANGLES±
FRACTIONS±
DECIMALS
.XX± .02
.XXX± .005
BEND RADII
FILLETS & ROUNDS 250/
SURFACE FINISH √
BREAK ALL SHARP EDGES
INTERPRET DRAWING IN ACCORDANCE WITH STANDARDS PRESCRIBED IN ASME Y14.100
DO NOT SCALE THIS DRAWING

PORT HUENEME DIVISION
NAVAL SURFACE WARFARE CENTER
4363 MISSILE WAY
PORT HUENEME, CA 93043–4307

PREPARED	AMSEC	06–07
CHECKED		
TECH LEAD		
BR HD		
ACCEPTED BY NAVSEA		(SIGNATURE DOES NOT DENOTE APPROVAL)
APPROVED FOR NAVSEA		(SIGN ONLY IF ENGINEERING HAS BEEN "PROVED" BY MANUFACTURE AND TEST)

DEPARTMENT OF THE NAVY
NAVAL SEA SYSTEMS COMMAND
WASHINGTON, D.C. 20376–5160

HEAVY UNREP – NAVY STANDARD
RAM TENSIONER

RETURN TANK COVER

SIZE	CAGE CODE	NAVSEA DWG NO.	REV
D	53711	8287542	–

SCALE 1/1 | UNIT WT 12.5 LBS | SHEET 1 OF 1

8287542

NOTICE OF CONFIGURATION CONTROL

THIS DRAWING DEFINES AN ITEM OF UNDERWAY REPLENISHMENT (UNREP) STANDARD HARDWARE. NO REVISION TO THIS DRAWING OR THE HARDWARE REPRESENTED BY IT IS AUTHORIZED WITHOUT THE WRITTEN APPROVAL OF THE NAVAL SEA SYSTEMS COMMAND.

DISTRIBUTION STATEMENT C: DISTRIBUTION AUTHORIZED TO U.S. GOVERNMENT AGENCIES AND THEIR CONTRACTORS: OTHER REQUESTS MUST BE REFERRED TO COMNAVSEA OR THE COGNIZANT NAVSEA CODE.

WARNING: THIS DOCUMENT CONTAINS TECHNICAL DATA WHOSE EXPORT IS RESTRICTED BY THE ARMS EXPORT CONTROL ACT (TITLE 22, U.S.C. SEC. 2751 ET SEQ.) OR EXECUTIVE ORDER 12470. VIOLATIONS OF THESE EXPORT LAWS ARE SUBJECT TO SEVERE CRIMINAL PENALTIES.

DESTRUCTION NOTICE: DESTROY BY ANY METHOD THAT WILL PREVENT DISCLOSURE OF CONTENTS OR RECONSTRUCTION OF THE DOCUMENT.

NSWC 4120/8 (REV 03–92)

REVISIONS				
ZONE	LTR	DESCRIPTION	DATE	APPROVED

NOTES:

1. PASSIVATE IN ACCORDANCE WITH ASTM A967. PASSIVATION TREATMENT SHALL BE DETERMINED USING ASTM A967, FIGURE X1.1.
2. PAINT ALL EXTERIOR SURFACES, EXCEPT THOSE NOTED "DO NOT PAINT", WITH PROCEDURES AND MATERIALS SPECIFIED IN PC 2 USING SPECIAL PROCEDURE FOR STAINLESS STEEL RAM TENSIONER PARTS.

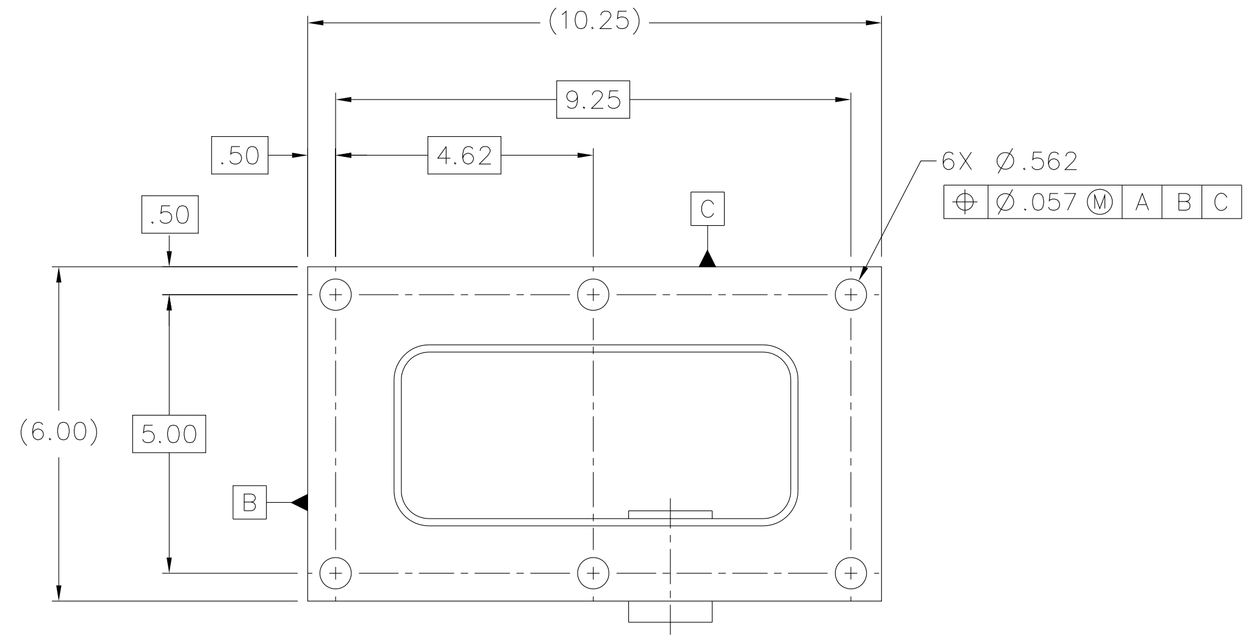

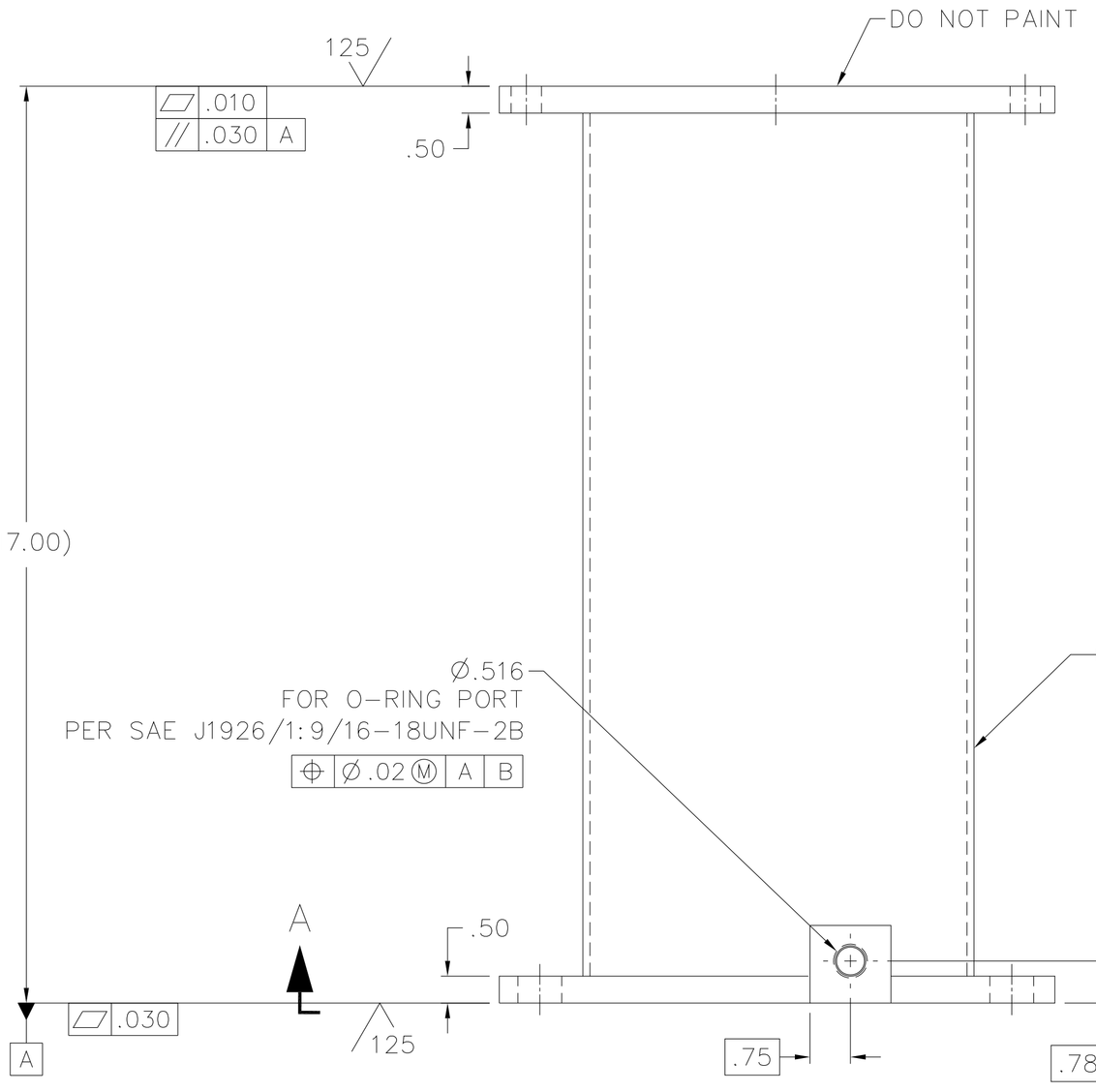

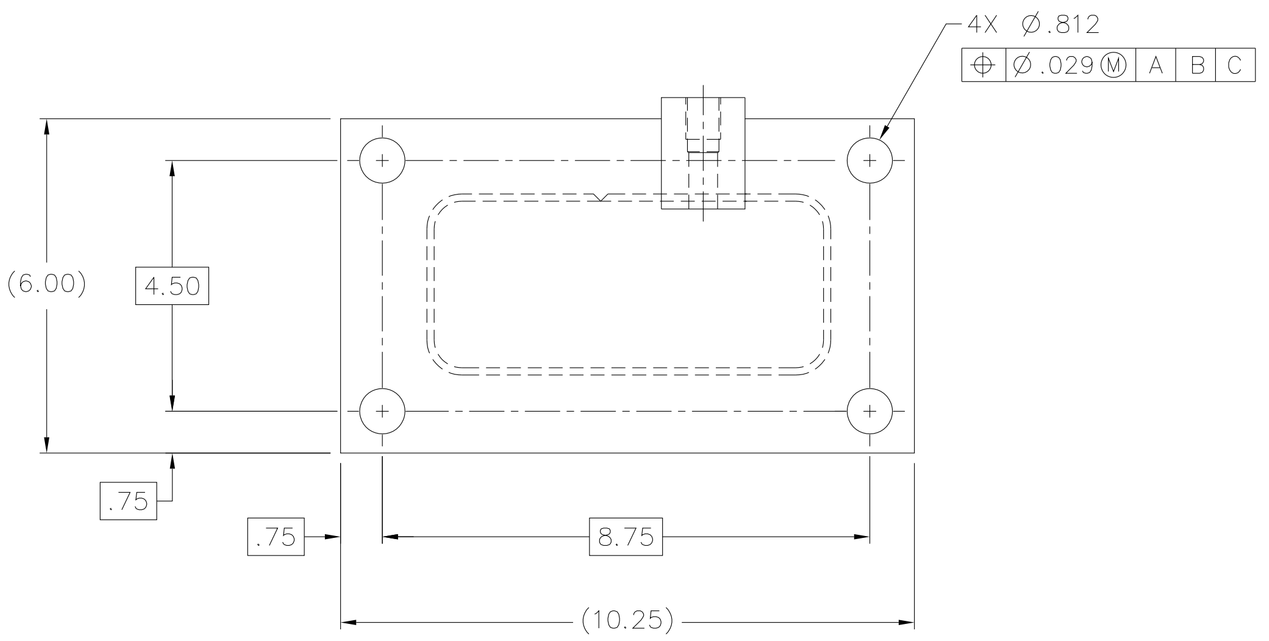

VIEW A–A

NOTICE OF CONFIGURATION CONTROL

THIS DRAWING DEFINES AN ITEM OF UNDERWAY REPLENISHMENT (UNREP) STANDARD HARDWARE. NO REVISION TO THIS DRAWING OR THE HARDWARE REPRESENTED BY IT IS AUTHORIZED WITHOUT THE WRITTEN APPROVAL OF THE NAVAL SEA SYSTEMS COMMAND.

DISTRIBUTION STATEMENT C: DISTRIBUTION AUTHORIZED TO U.S. GOVERNMENT AGENCIES AND THEIR CONTRACTORS; OTHER REQUESTS MUST BE REFERRED TO COMNAVSEA OR THE COGNIZANT NAVSEA CODE.

WARNING: THIS DOCUMENT CONTAINS TECHNICAL DATA WHOSE EXPORT IS RESTRICTED BY THE ARMS EXPORT CONTROL ACT (TITLE 22, U.S.C. SEC. 2751 ET SEQ.) OR EXECUTIVE ORDER 12470. VIOLATIONS OF THESE EXPORT LAWS ARE SUBJECT TO SEVERE CRIMINAL PENALTIES.

DESTRUCTION NOTICE: DESTROY BY ANY METHOD THAT WILL PREVENT DISCLOSURE OF CONTENTS OR RECONSTRUCTION OF THE DOCUMENT.

APPLICATION	
NEXT ASSY	USED ON
8287505	8287500

MATERIAL:

PART OR IDENTIFYING NO.	QTY REQD	CODE IDENT NO.	DRAWING OR SPECIFICATION	NOMENCLATURE OR DESCRIPTION	REMARKS
2	AR	53711	5210545	STD PAINT PROCEDURE–UNREP	SEE NOTE 2
1	1	–	8287544	RETURN TANK WELDMENT	

PARTS LIST

UNLESS OTHERWISE SPECIFIED:
ALL DIMENSIONS ARE IN INCHES
TOLERANCES: ANGLES±
FRACTIONS±
DECIMALS
.XX± .02
.XXX± .005
BEND RADII
FILLETS & ROUNDS
250
SURFACE FINISH
BREAK ALL SHARP EDGES

INTERPRET DRAWING IN ACCORDANCE WITH STANDARDS PRESCRIBED IN ASME Y14.100

DO NOT SCALE THIS DRAWING

PORT HUENEME DIVISION
NAVAL SURFACE WARFARE CENTER
4363 MISSILE WAY
PORT HUENEME, CA 93043–4307

PREPARED	AMSEC	06–07
CHECKED		
TECH LEAD		
BR HD		
ACCEPTED BY NAVSEA	(SIGNATURE DOES NOT DENOTE APPROVAL)	
APPROVED FOR NAVSEA	(SIGN ONLY IF ENGINEERING HAS BEEN "PROVED" BY MANUFACTURE AND TEST)	

DEPARTMENT OF THE NAVY
NAVAL SEA SYSTEMS COMMAND
WASHINGTON, D.C. 20376–5160

NAVY STANDARD HEAVY UNREP
RAM TENSIONER

RETURN TANK

SIZE	CAGE CODE	NAVSEA DWG NO.	REV
D	53711	8287543	–

SCALE 1/2 | UNIT WT 24.5 LBS | SHEET 1 OF 1

8287543 [ ]

NSWC 4120/8 (REV 03–92)

NOTES:

1. STOCK SIZE IN REMARKS COLUMN OF PARTS LIST IS NOMINAL WITHOUT MANUFACTURING ALLOWANCE.

2. WELDING REQUIREMENTS:

2.1 FABRICATION, WELDING, STRESS RELIEF AND INSPECTION SHALL BE IN ACCORDANCE WITH NAVSEA S9074-AR-GIB-010/278 AND T9074-AS-GIB-010/271, CLASS M-2, CATEGORY C AND REQUIRE VISUAL INSPECTION ONLY.

2.2 WELDMENT MAY BE STRAIGHTENED IF REQUIRED TO MEET DIMENSIONAL REQUIREMENTS ON THE FACE OF DRAWING.

3. UNLESS OTHERWISE SPECIFIED ON THIS DRAWING, ALL DIMENSIONS AND TOLERANCES REFER TO FINISHED PRODUCT.

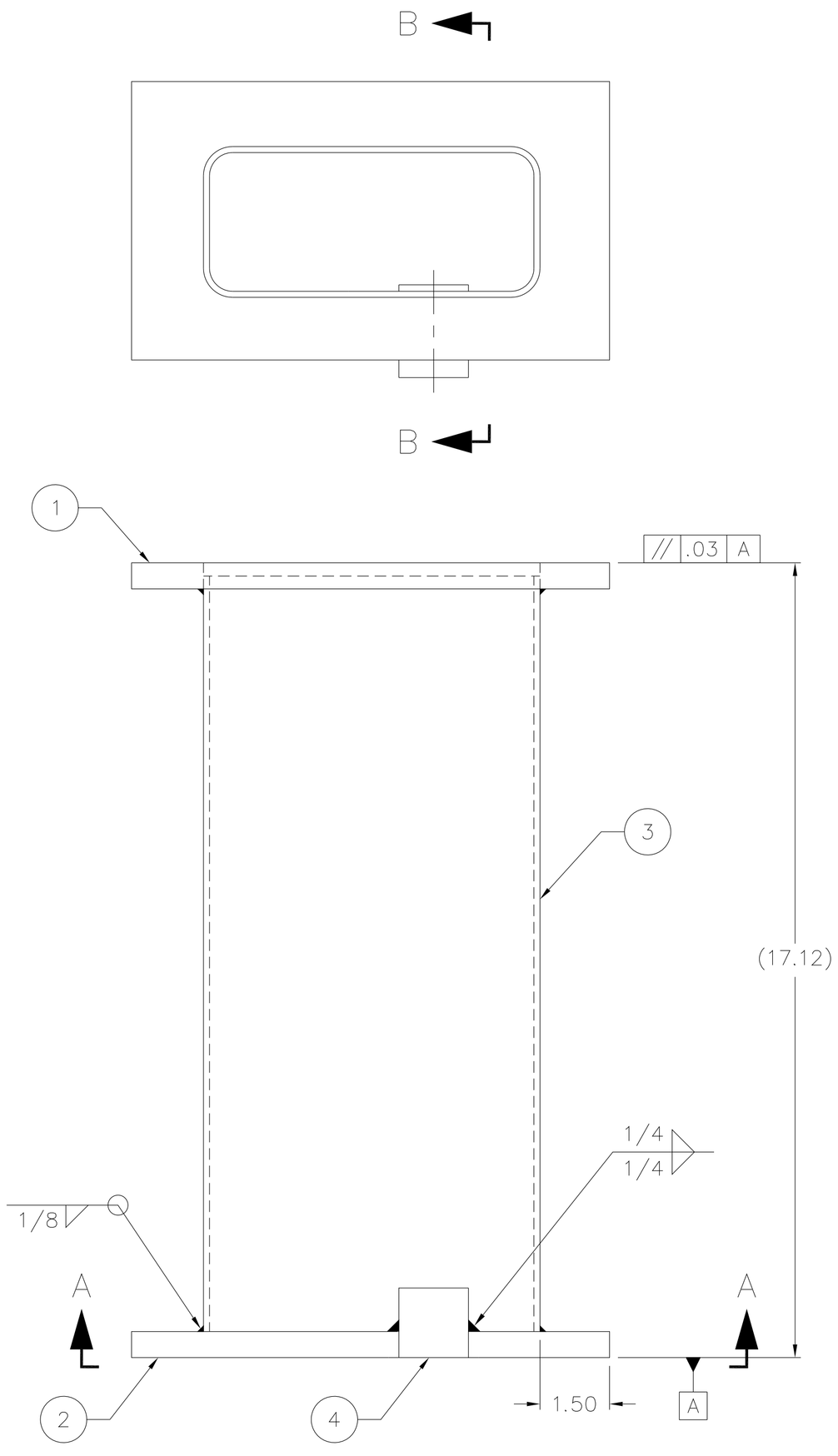

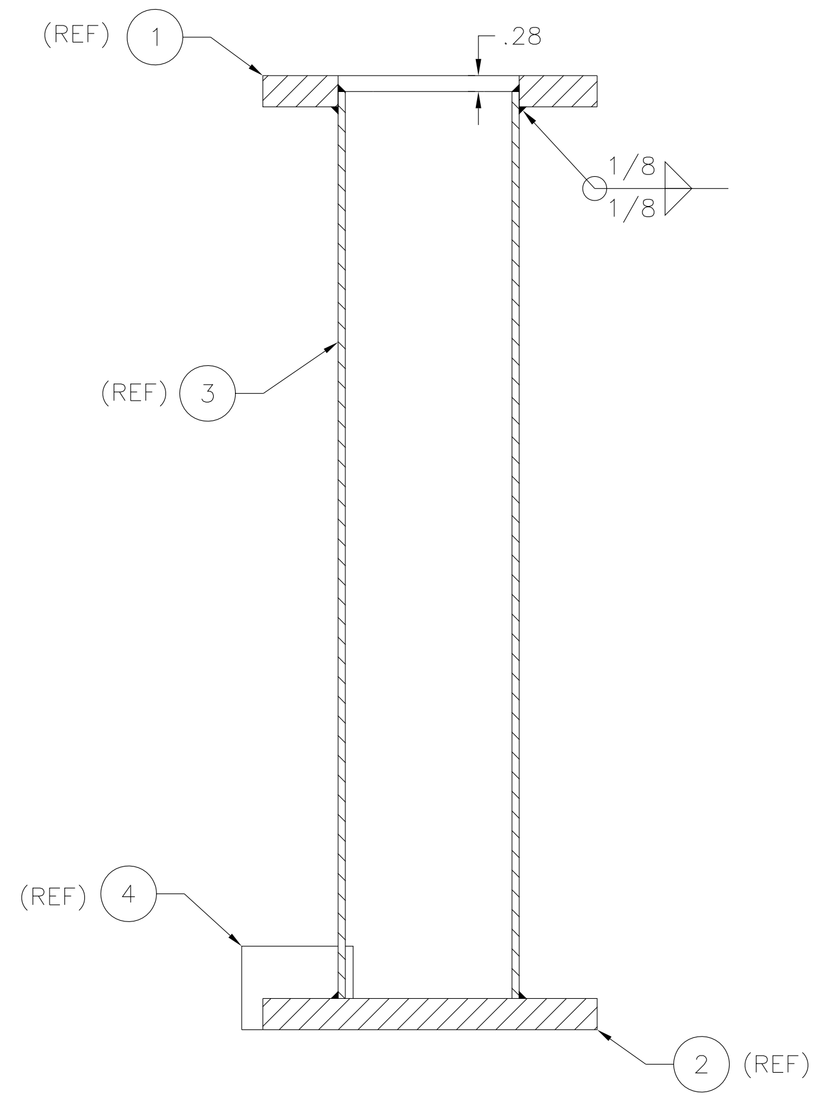

SECTION B-B
ROTATED 90° CW

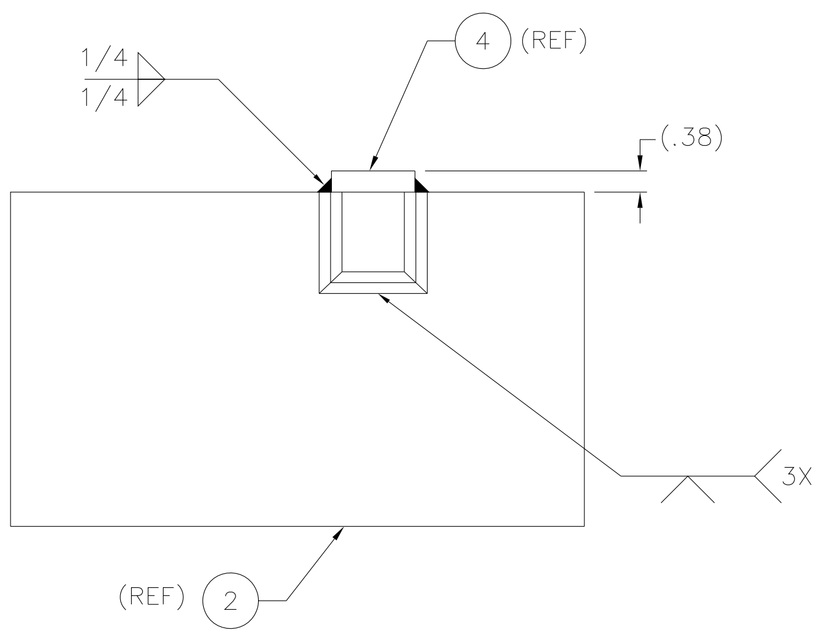

VIEW A-A

REVISIONS				
ZONE	LTR	DESCRIPTION	DATE	APPROVED

PART OR IDENTIFYING NO.	QTY REQD	CODE IDENT NO.	DRAWING OR SPECIFICATION	NOMENCLATURE OR DESCRIPTION	REMARKS
4	1	–	–	SQUARE BAR	1 1/2 X 1 1/2 X 2 LG
3	1	–	–	SHEET	1/8 X 16 X 19 15/16
2	1	–	–	PLATE	9/16 X 6 X 10 1/4
1	1	–	–	PLATE	9/16 X 6 X 10 1/4

PARTS LIST

DISTRIBUTION STATEMENT C: DISTRIBUTION AUTHORIZED TO U.S. GOVERNMENT AGENCIES AND THEIR CONTRACTORS; OTHER REQUESTS MUST BE REFERRED TO COMNAVSEA OR THE COGNIZANT NAVSEA CODE.

WARNING: THIS DOCUMENT CONTAINS TECHNICAL DATA WHOSE EXPORT IS RESTRICTED BY THE ARMS EXPORT CONTROL ACT (TITLE 22, U.S.C. SEC. 2751 ET SEQ.) OR EXECUTIVE ORDER 12470. VIOLATIONS OF THESE EXPORT LAWS ARE SUBJECT TO SEVERE CRIMINAL PENALTIES.

DESTRUCTION NOTICE: DESTROY BY ANY METHOD THAT WILL PREVENT DISCLOSURE OF CONTENTS OR RECONSTRUCTION OF THE DOCUMENT.

NOTICE OF CONFIGURATION CONTROL

THIS DRAWING DEFINES AN ITEM OF UNDERWAY REPLENISHMENT (UNREP) STANDARD HARDWARE. NO REVISION TO THIS DRAWING OR THE HARDWARE REPRESENTED BY IT IS AUTHORIZED WITHOUT THE WRITTEN APPROVAL OF THE NAVAL SEA SYSTEMS COMMAND.

APPLICATION	
NEXT ASSY	USED ON
8287543	8287500

6	5	4	3	2	1
				–	–

SHEET NUMBER

REVISION STATUS OF SHEETS

MATERIAL:
CRES
TY 316L
PC 1-3
PER ASTM A240
PC 4
PER ASTM A 276
CONDITION A

UNLESS OTHERWISE SPECIFIED:
ALL DIMENSIONS ARE IN INCHES
TOLERANCES: ANGLES±
FRACTIONS±
DECIMALS
.XX± .02
.XXX±
BEND RADII
FILLETS & ROUNDS
SURFACE FINISH 250√
BREAK ALL SHARP EDGES

INTERPRET DRAWING IN ACCORDANCE WITH STANDARDS PRESCRIBED IN ASME Y14.100

DO NOT SCALE THIS DRAWING

PORT HUENEME DIVISION
NAVAL SURFACE WARFARE CENTER
4363 MISSILE WAY
PORT HUENEME, CA 93043-4307

PREPARED	AMSEC	06-07
CHECKED		
TECH LEAD		
BR HD		
ACCEPTED BY NAVSEA	(SIGNATURE DOES NOT DENOTE APPROVAL)	
APPROVED FOR NAVSEA	(SIGN ONLY IF ENGINEERING HAS BEEN "PROVED" BY MANUFACTURE AND TEST)	

DEPARTMENT OF THE NAVY
NAVAL SEA SYSTEMS COMMAND
WASHINGTON, D.C. 20376-5160

HEAVY UNREP – NAVY STANDARD
RAM TENSIONER

RETURN TANK WELDMENT

SIZE	CAGE CODE	NAVSEA DWG NO.	REV
D	53711	8287544	–

SCALE 1/2 | UNIT WT 30.0 LBS | SHEET 1 OF 2

8287544 [ ]

NSWC 4120/8 (REV 03-92)

REVISIONS				
ZONE	LTR	DESCRIPTION	DATE	APPROVED

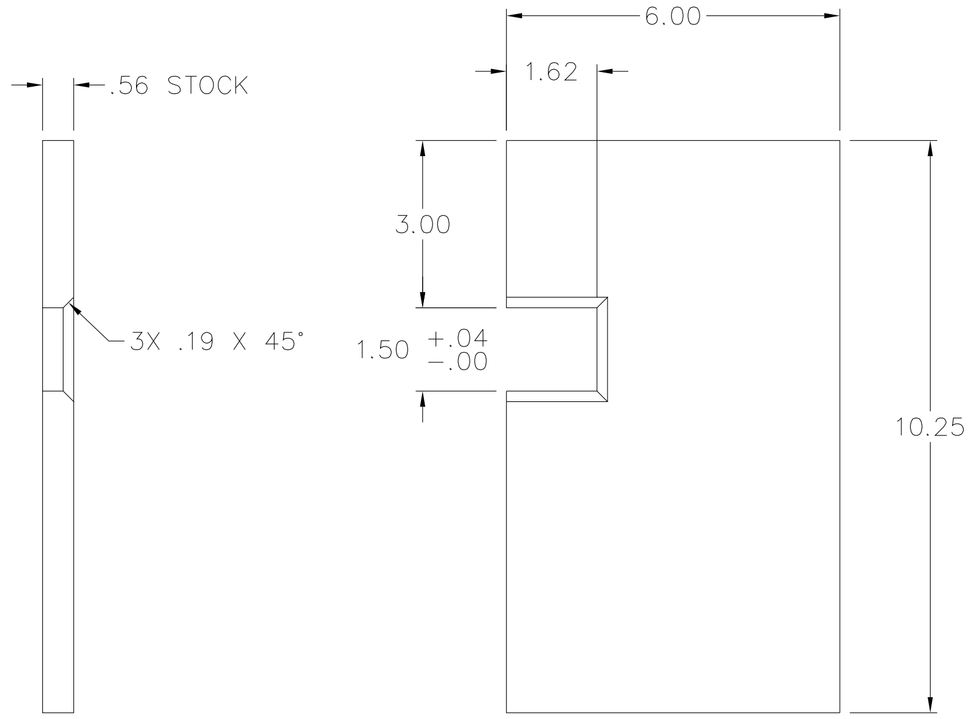

DETAIL OF PC 2

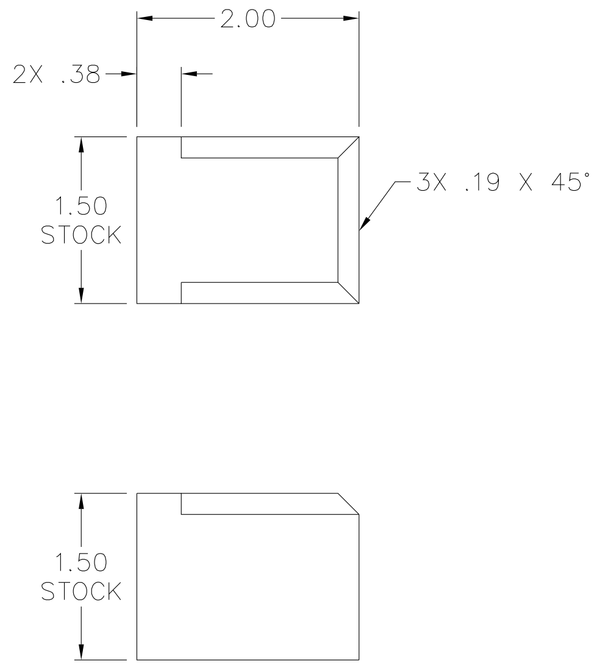

DETAIL OF PC 4
SCALE: 1/1

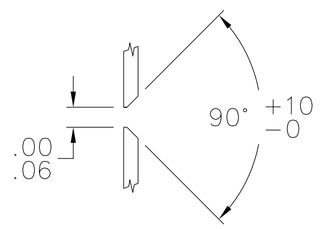

DETAIL C
SCALE: 1/1

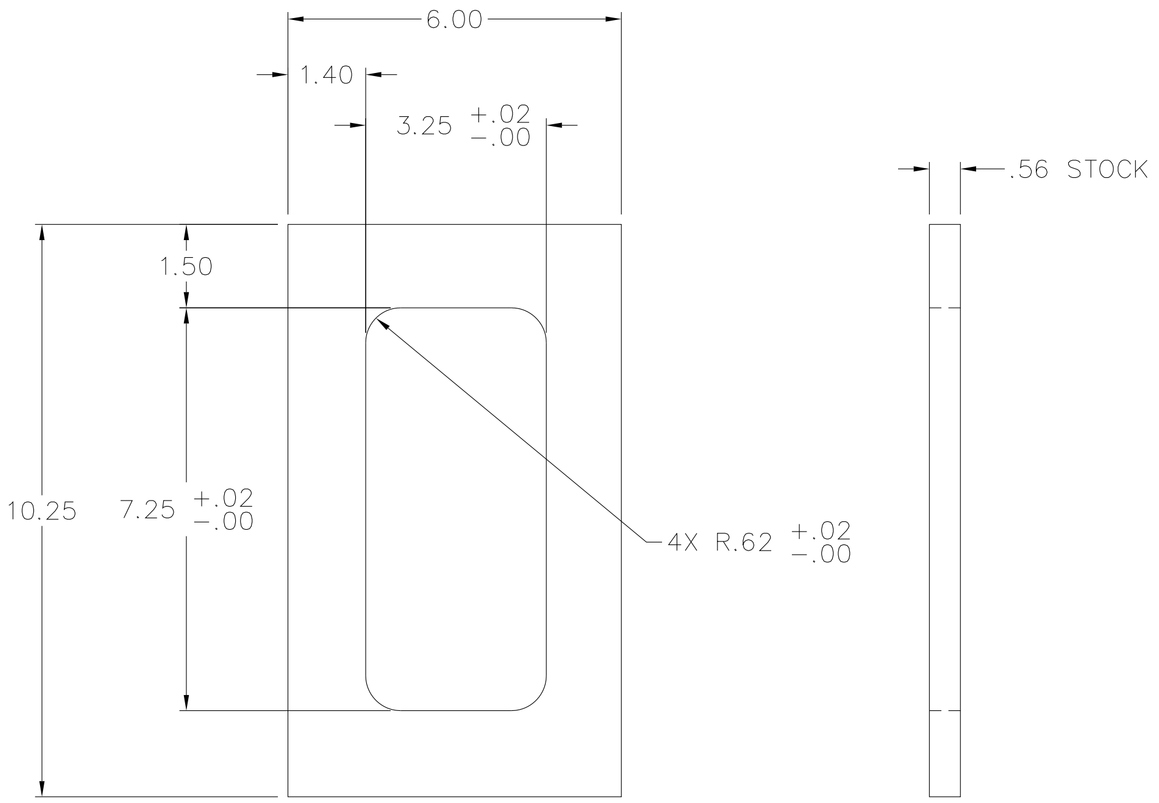

DETAIL OF PC 1

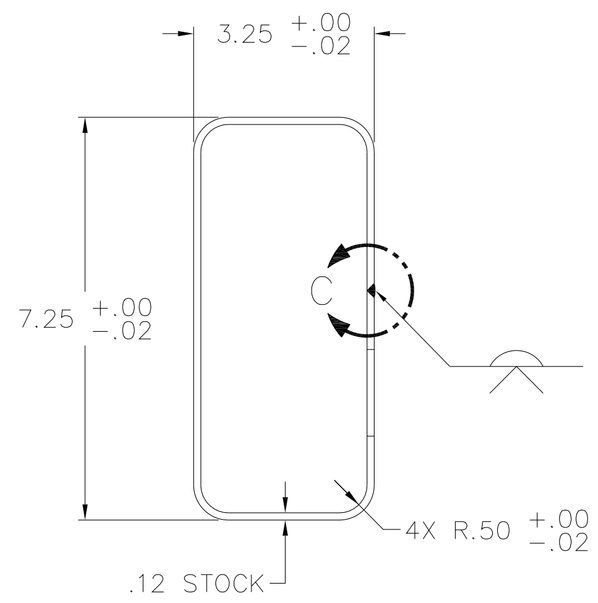

DETAIL OF PC 3

SIZE	CAGE CODE	NAVSEA DWG NO.	REV
D	53711	8287544	—
SCALE 1/2 & AS NOTED		UNIT WT ——	SHEET 2

8287544

NSWC 4120/8 (REV 03-92)

REVISIONS				
ZONE	LTR	DESCRIPTION	DATE	APPROVED

NOTES:

1. STOCK SIZE IN REMARKS COLUMN OF PARTS LIST IS NOMINAL WITHOUT MANUFACTURING ALLOWANCE.

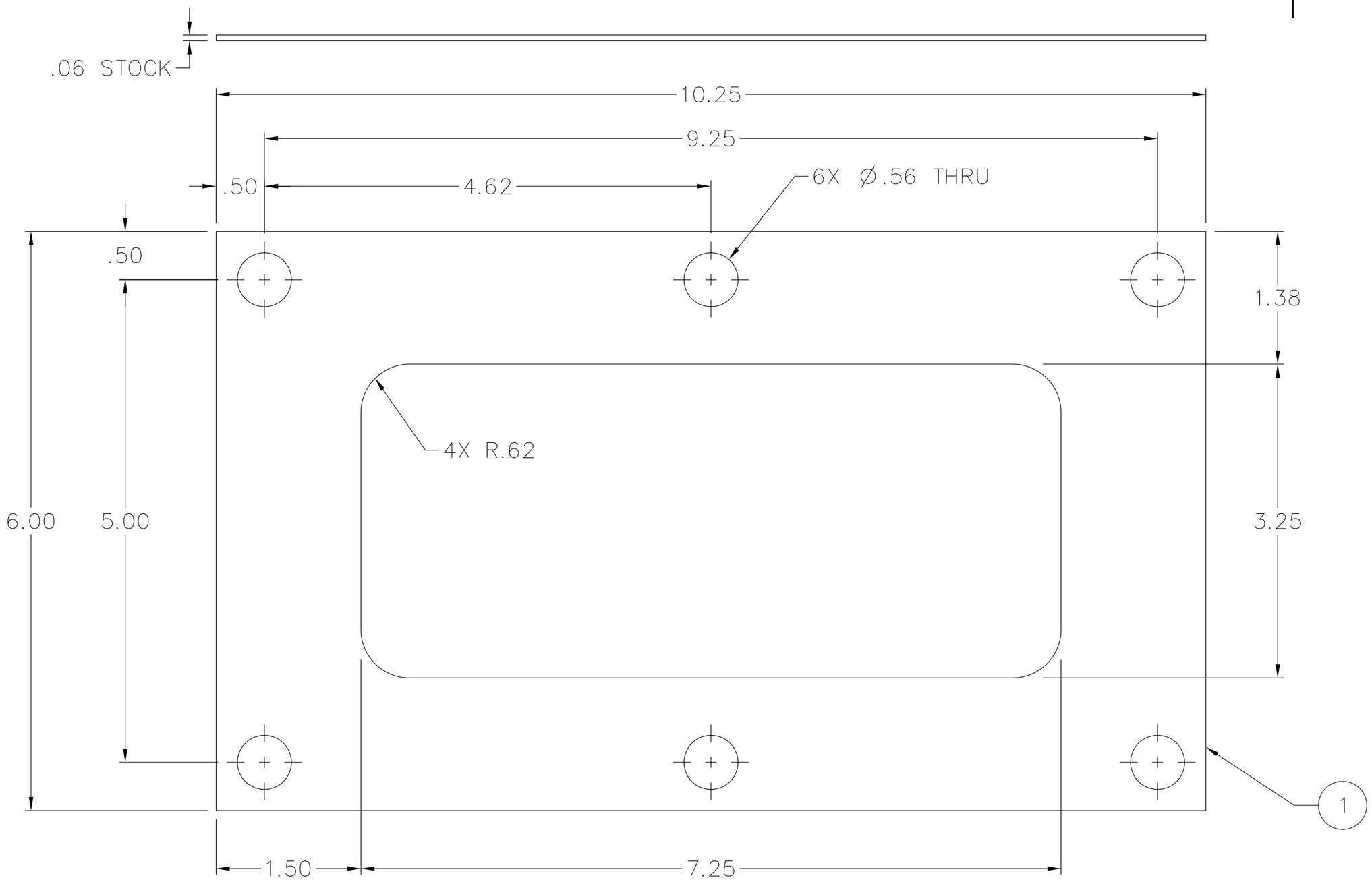

8287545

1		–	–	SHEET	1/16 X 6 X 10-1/4
PART OR IDENTIFYING NO.	QTY REQD	CODE IDENT NO.	DRAWING OR SPECIFICATION	NOMENCLATURE OR DESCRIPTION	REMARKS

PARTS LIST

DISTRIBUTION STATEMENT C: DISTRIBUTION AUTHORIZED TO U.S. GOVERNMENT AGENCIES AND THEIR CONTRACTORS; OTHER REQUESTS MUST BE REFERRED TO COMNAVSEA OR THE COGNIZANT NAVSEA CODE.

WARNING: THIS DOCUMENT CONTAINS TECHNICAL DATA WHOSE EXPORT IS RESTRICTED BY THE ARMS EXPORT CONTROL ACT (TITLE 22, U.S.C. SEC. 2751 ET SEQ.) OR EXECUTIVE ORDER 12470. VIOLATIONS OF THESE EXPORT LAWS ARE SUBJECT TO SEVERE CRIMINAL PENALTIES.

DESTRUCTION NOTICE: DESTROY BY ANY METHOD THAT WILL PREVENT DISCLOSURE OF CONTENTS OR RECONSTRUCTION OF THE DOCUMENT.

NOTICE OF CONFIGURATION CONTROL

THIS DRAWING DEFINES AN ITEM OF UNDERWAY REPLENISHMENT (UNREP) STANDARD HARDWARE. NO REVISION TO THIS DRAWING OR THE HARDWARE REPRESENTED BY IT IS AUTHORIZED WITHOUT THE WRITTEN APPROVAL OF THE NAVAL SEA SYSTEMS COMMAND.

APPLICATION	
NEXT ASSY	USED ON
8287505	8287500

MATERIAL:

ETHYLENE-PROPYLENE ELASTOMERIC COMPOUND MIL-DTL-22050 GRADE 1

UNLESS OTHERWISE SPECIFIED:
ALL DIMENSIONS ARE IN INCHES
TOLERANCES: ANGLES±
FRACTIONS±
DECIMALS
.xx± .02
.xxx±
BEND RADII
FILLETS & ROUNDS

SURFACE FINISH √
BREAK ALL SHARP EDGES

INTERPRET DRAWING IN ACCORDANCE WITH STANDARDS PRESCRIBED IN ASME Y14.100

DO NOT SCALE THIS DRAWING

PORT HUENEME DIVISION
NAVAL SURFACE WARFARE CENTER
4363 MISSILE WAY
PORT HUENEME, CA 93043-4307

PREPARED	AMSEC	06-07
CHECKED		
TECH LEAD		
BR HD		
ACCEPTED BY NAVSEA	(SIGNATURE DOES NOT DENOTE APPROVAL)	
APPROVED FOR NAVSEA	(SIGN ONLY IF ENGINEERING HAS BEEN "PROVED" BY MANUFACTURE AND TEST)	

DEPARTMENT OF THE NAVY
NAVAL SEA SYSTEMS COMMAND
WASHINGTON, D.C. 20376-5160

HEAVY UNREP – NAVY STANDARD
RAM TENSIONER

RETURN TANK GASKET

SIZE	CAGE CODE	NAVSEA DWG NO.	REV
C	53711	8287545	–

SCALE 1/1 | UNIT WT .5 LBS | SHEET 1 OF 1

NSWC 4120/4 (REV. 03-92)

NOTES:

1. WELDING REQUIREMENTS:

1.1 FABRICATION, WELDING, STRESS RELIEF AND INSPECTION SHALL BE IN ACCORDANCE WITH NAVSEA S9074-AR-GIB-010/278 CLASS P-1 AND T9074-AS-GIB-010/271, CLASS M-2, CATEGORY A. ALL WELDS ON THIS DRAWING ARE CLASSIFIED AS CATEGORY A AND REQUIRE ULTRASONIC (UT) INSPECTION PER NOTE 2.3.

1.2 WELD INSPECTION STARTS AT ROOT WELD IAW TECHNICAL PUBLICATIONS LISTED IN 1.1 ABOVE.

1.3 CONDUCT 100% ULTRASONIC INSPECTION PER 1998 ASME BOILER AND AND PRESSURE VESSEL CODES, APPENDIX 12.

2. UNLESS OTHERWISE SPECIFIED ON THIS DRAWING, ALL DIMENSIONS AND TOLERANCES REFER TO FINISHED PRODUCT.

3. WELDMENT MAY BE STRAIGHTENED IF REQUIRED TO MEET DIMENSIONAL REQUIREMENTS ON THE FACE OF DRAWING.

4. ALL JOINTS SHALL BE SEAL WELDED.

5. STRESS RELIEVE PER SAE-AMS-H-6875 OR AWS D1.1, PARA 4.4.

6. AFTER ESTABLISHING EXACT CONFIGURATION, WELDING AND STRESS RELIEF, IN ACCORDANCE WITH NOTES 1 AND 5 CLEAN, PICKLE AND FLUSH PER MIL-STD-419.

7. AFTER COMPLYING WITH NOTE 6, PAINT ALL EXTERIOR SURFACES, EXCEPT THOSE NOTED "DO NOT PAINT" AND INTERIOR HOLES USING PROCEDURES AND MATERIALS SPECIFIED IN PC 7 USING SPECIAL PROCEDURE FOR RAM TENSIONERS.

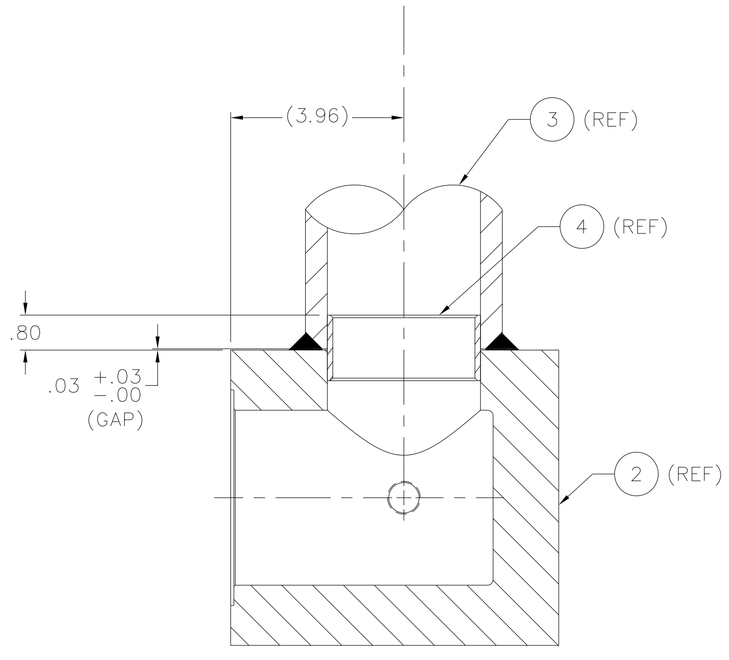

SECTION B-B
SCALE: 1/2

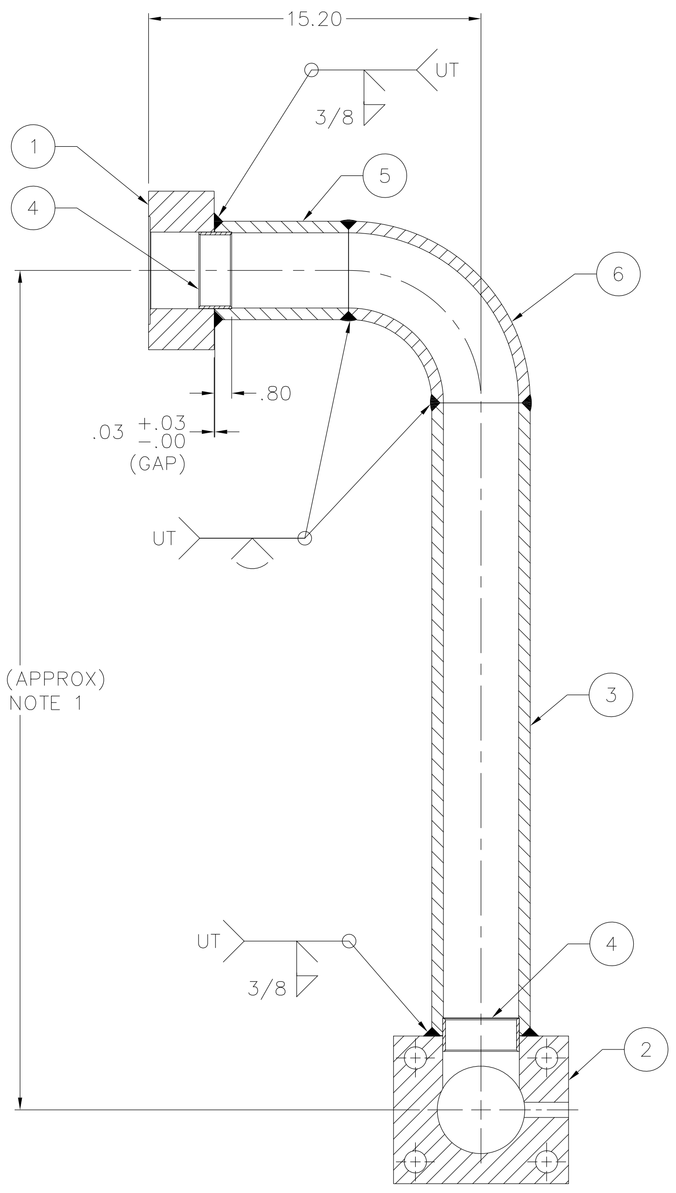

SECTION A-A
SCALE: 2/1

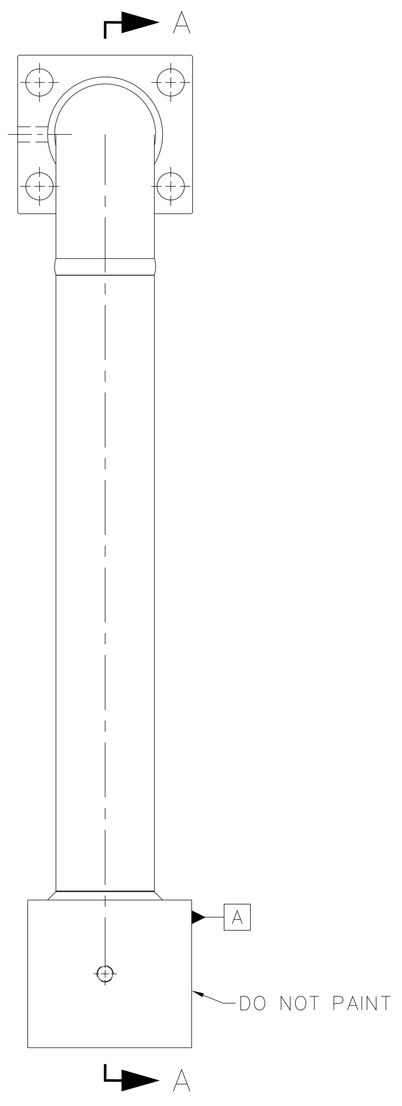

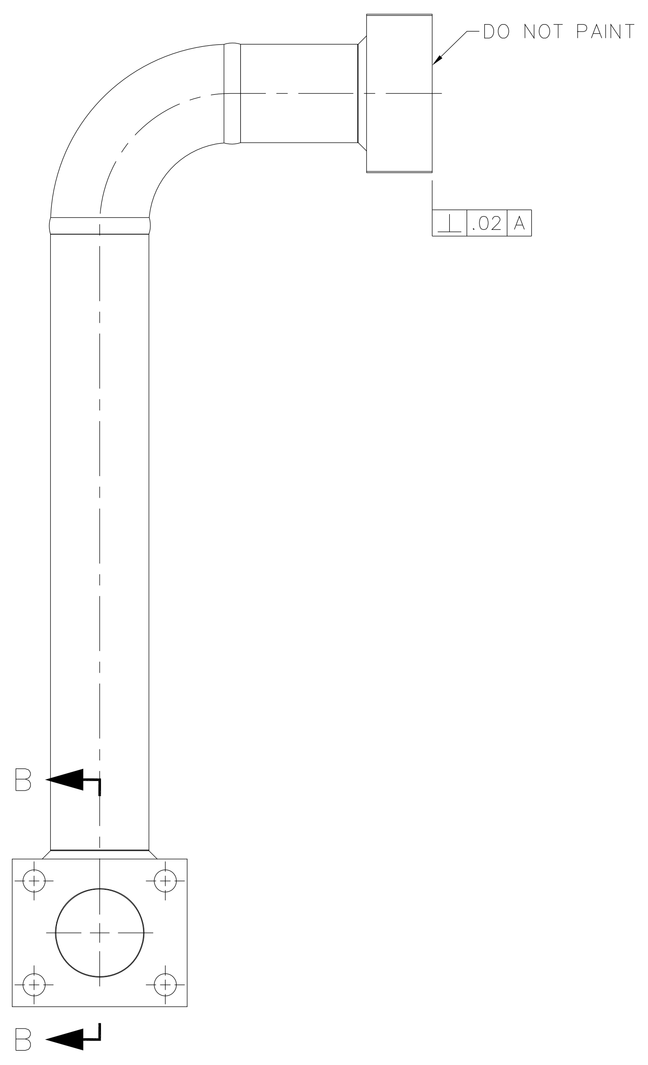

REVISIONS				
ZONE	LTR	DESCRIPTION	DATE	APPROVED

PART OR IDENTIFYING NO.	QTY REQD	CODE IDENT NO.	DRAWING OR SPECIFICATION	NOMENCLATURE OR DESCRIPTION	REMARKS
7	AR	53711	5210545	STD PAINT PROCEDURE-UNREP	SEE NOTE 7
6	1	–	ASME B16.9	ELBOW, 90 DEG, LR, BUTT WELD	4 NPS, SCH 160
5	1	–	8287549-2	CYLINDER/ACCUMULATOR PIPE	
4	2	–	8287550	BACKING RING CYL/ACC PP	
3	1	–	8287549-1	CYLINDER/ACCUMULATOR PIPE	
2	1	–	8287547	LOWER BLOCK CYL/ACC PP	
1	1	–	8287548	UPPER BLOCK CYL/ACC PP	

PARTS LIST

NOTICE OF CONFIGURATION CONTROL

THIS DRAWING DEFINES AN ITEM OF UNDERWAY REPLENISHMENT (UNREP) STANDARD HARDWARE. NO REVISION TO THIS DRAWING OR THE HARDWARE REPRESENTED BY IT IS AUTHORIZED WITHOUT THE WRITTEN APPROVAL OF THE NAVAL SEA SYSTEMS COMMAND.

DISTRIBUTION STATEMENT C: DISTRIBUTION AUTHORIZED TO U.S. GOVERNMENT AGENCIES AND THEIR CONTRACTORS; OTHER REQUESTS MUST BE REFERRED TO COMNAVSEA OR THE COGNIZANT NAVSEA CODE.

WARNING: THIS DOCUMENT CONTAINS TECHNICAL DATA WHOSE EXPORT IS RESTRICTED BY THE ARMS EXPORT CONTROL ACT (TITLE 22, U.S.C. SEC. 2751 ET SEQ.) OR EXECUTIVE ORDER 12470. VIOLATIONS OF THESE EXPORT LAWS ARE SUBJECT TO SEVERE CRIMINAL PENALTIES.

DESTRUCTION NOTICE: DESTROY BY ANY METHOD THAT WILL PREVENT DISCLOSURE OF CONTENTS OR RECONSTRUCTION OF THE DOCUMENT.

APPLICATION	
NEXT ASSY	USED ON
8287500	8287500

MATERIAL:
PC 6: STEEL PER ASTM A234 WPB

UNLESS OTHERWISE SPECIFIED:
ALL DIMENSIONS ARE IN INCHES
TOLERANCES: ANGLES± .5°
FRACTIONS±
DECIMALS
.XX± .02
.XXX± .005
BEND RADII
FILLETS & ROUNDS .250
SURFACE FINISH
BREAK ALL SHARP EDGES
INTERPRET DRAWING IN ACCORDANCE WITH STANDARDS PRESCRIBED IN ASME Y14.100
DO NOT SCALE THIS DRAWING

PORT HUENEME DIVISION
NAVAL SURFACE WARFARE CENTER
4363 MISSILE WAY
PORT HUENEME, CA 93043-4307

PREPARED	AMSEC	06-07
CHECKED		
TECH LEAD		
BR HD		
ACCEPTED BY NAVSEA	(SIGNATURE DOES NOT DENOTE APPROVAL)	
APPROVED FOR NAVSEA	(SIGN ONLY IF ENGINEERING HAS BEEN "PROVED" BY MANUFACTURE AND TEST)	

DEPARTMENT OF THE NAVY
NAVAL SEA SYSTEMS COMMAND
WASHINGTON,D.C. 20376-5160

HEAVY UNREP-NAVY STANDARD
RAM TENSIONER

RAM CYL TO ACC PIPE ASSEMBLY

SIZE	CAGE CODE	NAVSEA DWG. NO.	REV
F	53711	8287546	–

SCALE 1/4 | UNIT WT 196.0 LBS | SHEET 1 OF 1

8287546

NSWC 4120/1A (REV. 03-92)

NSWC 4120/1A (REV. 03-92)

NOTICE OF CONFIGURATION CONTROL

THIS DRAWING DEFINES AN ITEM OF UNDERWAY REPLENISHMENT (UNREP) STANDARD HARDWARE. NO REVISION TO THIS DRAWING OR THE HARDWARE REPRESENTED BY IT IS AUTHORIZED WITHOUT THE WRITTEN APPROVAL OF THE NAVAL SEA SYSTEMS COMMAND.

DISTRIBUTION STATEMENT C: DISTRIBUTION AUTHORIZED TO U.S. GOVERNMENT AGENCIES AND THEIR CONTRACTORS; OTHER REQUESTS MUST BE REFERRED TO COMNAVSEA OR THE COGNIZANT NAVSEA CODE.

WARNING: THIS DOCUMENT CONTAINS TECHNICAL DATA WHOSE EXPORT IS RESTRICTED BY THE ARMS EXPORT CONTROL ACT (TITLE 22, U.S.C. 2751 ET SEQ.) OR EXECUTIVE ORDER 12470. VIOLATIONS OF THESE EXPORT LAWS ARE SUBJECT TO SEVERE CRIMINAL PENALTIES.

DESTRUCTION NOTICE: DESTROY BY ANY METHOD THAT WILL PREVENT DISCLOSURE OF CONTENTS OR RECONSTRUCTION OF THE DOCUMENT.

APPLICATION	
NEXT ASSY	USED ON
8287546	8287500

MATERIAL: STEEL PER ASTM A515 GR 70

UNLESS OTHERWISE SPECIFIED:
ALL DIMENSIONS ARE IN INCHES
TOLERANCES: ANGLES± .5°
FRACTIONS±
DECIMALS
.xx± .02
.xxx± .005
BEND RADII
FILLETS & ROUNDS 250√
SURFACE FINISH 250√
BREAK ALL SHARP EDGES
INTERPRET DRAWING IN ACCORDANCE WITH STANDARDS PRESCRIBED IN ASME Y14.100
DO NOT SCALE THIS DRAWING

PREPARED	ARSEC	06-07
CHECKED		
TECH LEAD		
BR HD		
ACCEPTED BY NAVSEA (SIGNATURE DOES NOT DENOTE APPROVAL)		
APPROVED FOR NAVSEA (SIGN ONLY IF ENDORSING HAS BEEN PREPARED AND TESTED)		

PORT HUENEME DIVISION
NAVAL SURFACE WARFARE CENTER
4363 MISSILE WAY
PORT HUENEME, CA 93043-4307

DEPARTMENT OF THE NAVY
NAVAL SEA SYSTEMS COMMAND
WASHINGTON,D.C. 20376-5160

HEAVY UNREP-NAVY STANDARD
RAM TENSIONER
LOWER BLOCK
CYLINDER/ACCUMULATOR PIPE

SIZE	CAGE CODE	NAVSEA DWG. NO.	REV
F	53711	8287547	—

SCALE 1/2 | UNIT WT 78.7 LBS | SHEET 1 OF 1

PARTS LIST

PART OR IDENTIFYING NO.	QTY REQD	CODE IDENT NO.	DRAWING OR SPECIFICATION	NOMENCLATURE OR DESCRIPTION	REMARKS

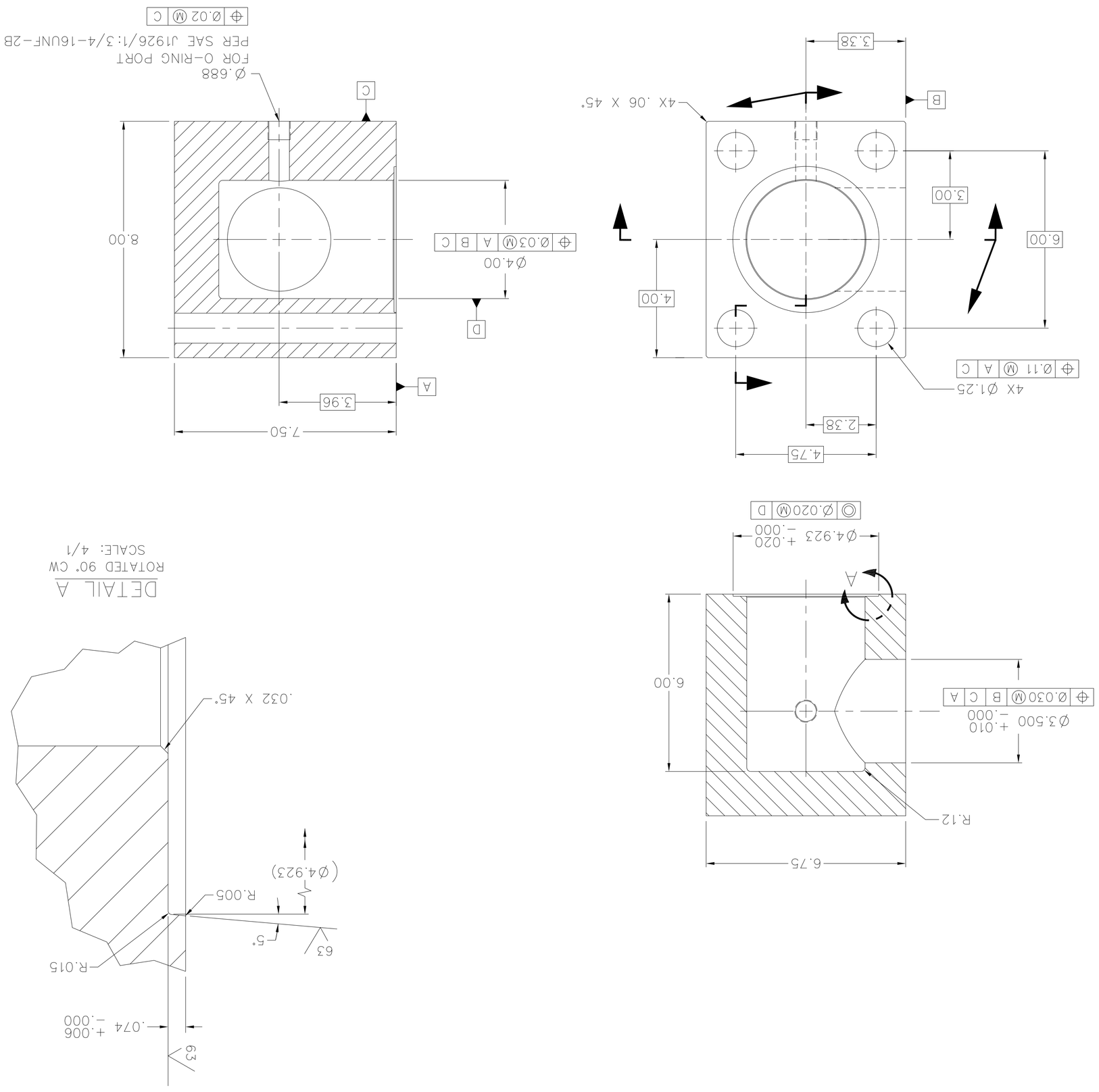

NOTES:

1. THE SPECIFICATION IN THE MATERIAL BLOCK CAN BE FOUND IN SECTION II OF THE ASME BOILER AND PRESSURE VESSEL CODE.

REVISIONS			
ZONE	LTR	DESCRIPTION	DATE	APPROVED

8287547

NOTES:

1. THE SPECIFICATION IN THE MATERIAL BLOCK CAN BE FOUND IN SECTION II OF THE ASME BOILER AND PRESSURE VESSEL CODE.

REVISIONS				
ZONE	LTR	DESCRIPTION	DATE	APPROVED

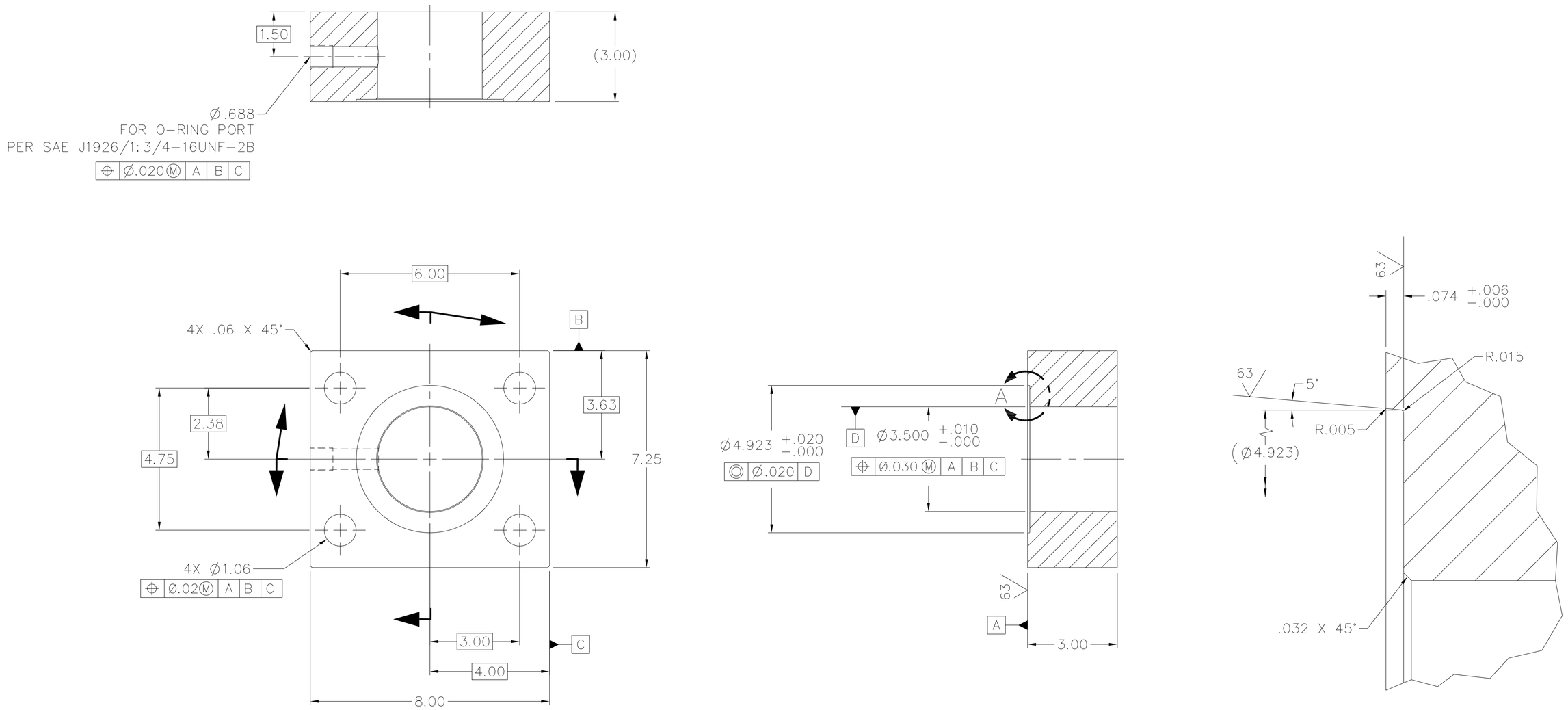

DETAIL A
SCALE: 4/1

PART OR IDENTIFYING NO.	QTY REQD	CODE IDENT NO.	DRAWING OR SPECIFICATION	NOMENCLATURE OR DESCRIPTION	REMARKS

PARTS LIST

NOTICE OF CONFIGURATION CONTROL

THIS DRAWING DEFINES AN ITEM OF UNDERWAY REPLENISHMENT (UNREP) STANDARD HARDWARE. NO REVISION TO THIS DRAWING OR THE HARDWARE REPRESENTED BY IT IS AUTHORIZED WITHOUT THE WRITTEN APPROVAL OF THE NAVAL SEA SYSTEMS COMMAND.

DISTRIBUTION STATEMENT C: DISTRIBUTION AUTHORIZED TO U.S. GOVERNMENT AGENCIES AND THEIR CONTRACTORS; OTHER REQUESTS MUST BE REFERRED TO COMNAVSEA OR THE COGNIZANT NAVSEA CODE.

WARNING: THIS DOCUMENT CONTAINS TECHNICAL DATA WHOSE EXPORT IS RESTRICTED BY THE ARMS EXPORT CONTROL ACT (TITLE 22, U.S.C. SEC. 2751 ET SEQ.) OR EXECUTIVE ORDER 12470. VIOLATIONS OF THESE EXPORT LAWS ARE SUBJECT TO SEVERE CRIMINAL PENALTIES.

DESTRUCTION NOTICE: DESTROY BY ANY METHOD THAT WILL PREVENT DISCLOSURE OF CONTENTS OR RECONSTRUCTION OF THE DOCUMENT.

APPLICATION	
NEXT ASSY	USED ON
8287546	8287500

MATERIAL:
STEEL
PER
ASTM A515
GR 70

UNLESS OTHERWISE SPECIFIED:
ALL DIMENSIONS ARE IN INCHES
TOLERANCES: ANGLES± .5°
FRACTIONS±
DECIMALS
.XX± .02
.XXX± .005
BEND RADII
FILLETS & ROUNDS
SURFACE FINISH 250
BREAK ALL SHARP EDGES
INTERPRET DRAWING IN ACCORDANCE WITH STANDARDS PRESCRIBED IN ASME Y14.100
DO NOT SCALE THIS DRAWING

PORT HUENEME DIVISION
NAVAL SURFACE WARFARE CENTER
4363 MISSILE WAY
PORT HUENEME, CA 93043-4307

PREPARED	AMSEC	06-07
CHECKED		
TECH LEAD		
BR HD		
ACCEPTED BY NAVSEA	(SIGNATURE DOES NOT DENOTE APPROVAL)	
APPROVED FOR NAVSEA	(SIGN ONLY IF ENGINEERING HAS BEEN "PROVED" BY MANUFACTURE AND TEST)	

DEPARTMENT OF THE NAVY
NAVAL SEA SYSTEMS COMMAND
WASHINGTON,D.C. 20376-5160

HEAVY UNREP-NAVY STANDARD
RAM TENSIONER
UPPER BLOCK
CYLINDER/ACCUMULATOR PIPE

SIZE	CAGE CODE	NAVSEA DWG. NO.	REV
F	53711	8287548	–

SCALE 1/2 | UNIT WT 44.3 LBS | SHEET 1 OF OF 1

8287548

NSWC 4120/1A (REV. 03-92)

REVISIONS				
ZONE	LTR	DESCRIPTION	DATE	APPROVED

NOTES:

1. SEE NEXT ASSEMBLY TO ESTABLISH EXACT LENGTH FOR –1 AND –2.
2. THE SPECIFICATION LISTED IN THE MATERIAL BLOCK CAN BE FOUND IN SECTION II OF THE ASME BOILER AND PRESSURE VESSEL CODE.

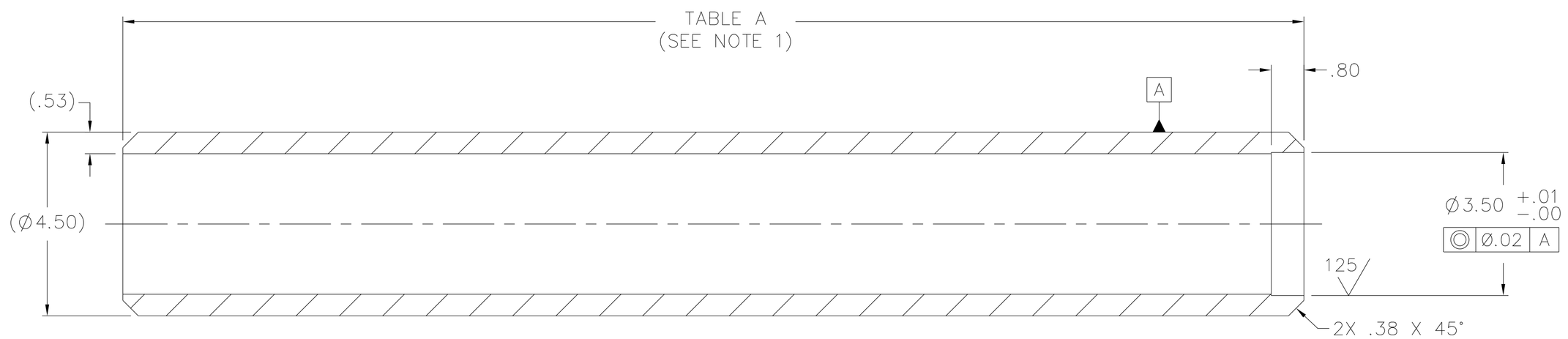

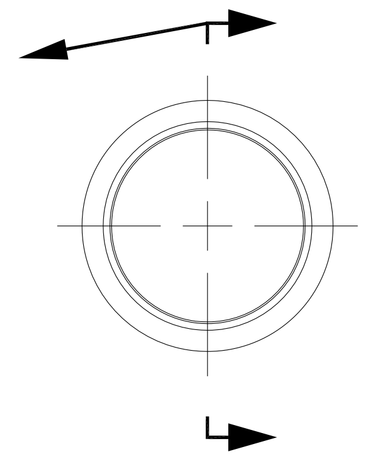

DETAIL A

DASH NO –1 SHOWN
DASH NO –2 SIMILAR EXCEPT AS NOTED

TABLE A			
DASH NO	QTY REQD	OVERALL LENGTH	WEIGHT
–1	1	28.92	50.9 LBS
–2	1	6.11	10.8 LBS

PART OR IDENTIFYING NO.	QTY REQD	CODE IDENT NO.	DRAWING OR SPECIFICATION	NOMENCLATURE OR DESCRIPTION	REMARKS

PARTS LIST

NOTICE OF CONFIGURATION CONTROL

THIS DRAWING DEFINES AN ITEM OF UNDERWAY REPLENISHMENT (UNREP) STANDARD HARDWARE. NO REVISION TO THIS DRAWING OR THE HARDWARE REPRESENTED BY IT IS AUTHORIZED WITHOUT THE WRITTEN APPROVAL OF THE NAVAL SEA SYSTEMS COMMAND.

DISTRIBUTION STATEMENT C: DISTRIBUTION AUTHORIZED TO U.S. GOVERNMENT AGENCIES AND THEIR CONTRACTORS: OTHER REQUESTS MUST BE REFERRED TO COMNAVSEA OR THE COGNIZANT NAVSEA CODE.

WARNING: THIS DOCUMENT CONTAINS TECHNICAL DATA WHOSE EXPORT IS RESTRICTED BY THE ARMS EXPORT CONTROL ACT (TITLE 22, U.S.C. SEC. 2751 ET SEQ.) OR EXECUTIVE ORDER 12470. VIOLATIONS OF THESE EXPORT LAWS ARE SUBJECT TO SEVERE CRIMINAL PENALTIES.

DESTRUCTION NOTICE: DESTROY BY ANY METHOD THAT WILL PREVENT DISCLOSURE OF CONTENTS OR RECONSTRUCTION OF THE DOCUMENT.

APPLICATION	
NEXT ASSY	USED ON
8287546	8287500

MATERIAL:
SEAMLESS
STEEL PIPE
PER ASTM A106
GRADE B

UNLESS OTHERWISE SPECIFIED:
ALL DIMENSIONS ARE IN INCHES
TOLERANCES: ANGLES± .5°
FRACTIONS±
DECIMALS
.XX± .02
.XXX±
BEND RADII
FILLETS & ROUNDS 250
SURFACE FINISH √
BREAK ALL SHARP EDGES
INTERPRET DRAWING IN ACCORDANCE WITH STANDARDS PRESCRIBED IN ASME Y14.100
DO NOT SCALE THIS DRAWING

PORT HUENEME DIVISION
NAVAL SURFACE WARFARE CENTER
4363 MISSILE WAY
PORT HUENEME, CA 93043–4307

PREPARED	AMSEC	06–07
CHECKED		
TECH LEAD		
BR HD		
ACCEPTED BY NAVSEA	(SIGNATURE DOES NOT DENOTE APPROVAL)	
APPROVED FOR NAVSEA	(SIGN ONLY IF ENGINEERING HAS BEEN "PROVED" BY MANUFACTURE AND TEST)	

DEPARTMENT OF THE NAVY
NAVAL SEA SYSTEMS COMMAND
WASHINGTON, D.C. 20376–5160

HEAVY UNREP–NAVY STANDARD
RAM TENSIONER

CYLINDER/ACCUMULATOR PIPE

SIZE	CAGE CODE	NAVSEA DWG NO.	REV
D	53711	8287549	–

SCALE 1/2 | UNIT WT TABLE A | SHEET 1 OF 1

8287549

NSWC 4120/8 (REV 03–92)

REVISIONS				
ZONE	LTR	DESCRIPTION	DATE	APPROVED

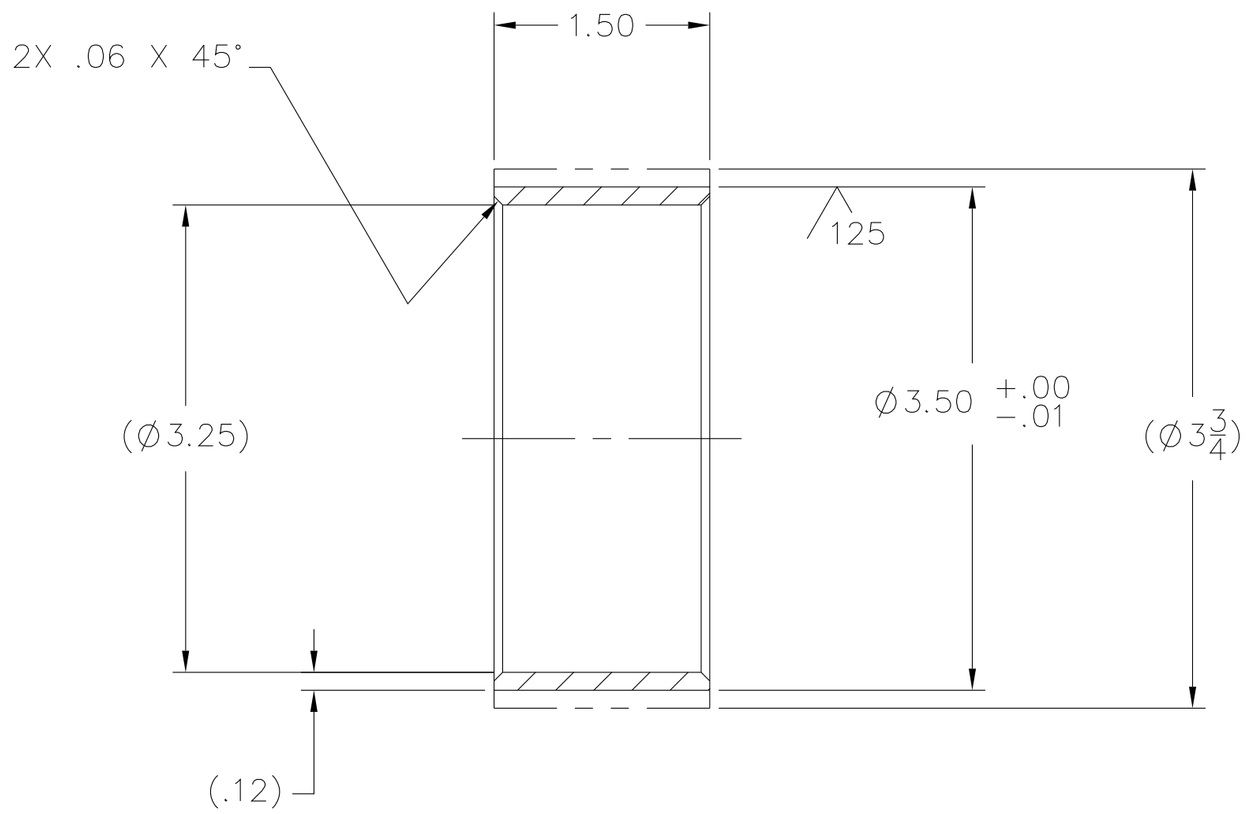

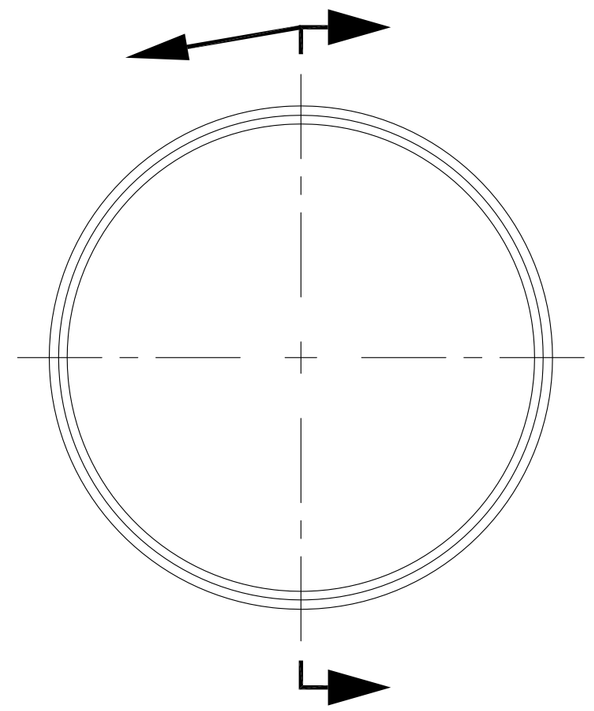

8287550

DISTRIBUTION STATEMENT C: DISTRIBUTION AUTHORIZED TO U.S. GOVERNMENT AGENCIES AND THEIR CONTRACTORS; OTHER REQUESTS MUST BE REFERRED TO COMNAVSEA OR THE COGNIZANT NAVSEA CODE.

WARNING: THIS DOCUMENT CONTAINS TECHNICAL DATA WHOSE EXPORT IS RESTRICTED BY THE ARMS EXPORT CONTROL ACT (TITLE 22, U.S.C. SEC. 2751 ET SEQ.) OR EXECUTIVE ORDER 12470. VIOLATIONS OF THESE EXPORT LAWS ARE SUBJECT TO SEVERE CRIMINAL PENALTIES.

DESTRUCTION NOTICE: DESTROY BY ANY METHOD THAT WILL PREVENT DISCLOSURE OF CONTENTS OR RECONSTRUCTION OF THE DOCUMENT.

PART OR IDENTIFYING NO.	QTY REQD	CODE IDENT NO.	DRAWING OR SPECIFICATION	NOMENCLATURE OR DESCRIPTION	REMARKS

PARTS LIST

NOTICE OF CONFIGURATION CONTROL

THIS DRAWING DEFINES AN ITEM OF UNDERWAY REPLENISHMENT (UNREP) STANDARD HARDWARE. NO REVISION TO THIS DRAWING OR THE HARDWARE REPRESENTED BY IT IS AUTHORIZED WITHOUT THE WRITTEN APPROVAL OF THE NAVAL SEA SYSTEMS COMMAND.

APPLICATION	
NEXT ASSY	USED ON
8287546	8287500

MATERIAL:

SEAMLESS
STEEL TUBE
PER
ASTM A519
GR 1026

UNLESS OTHERWISE SPECIFIED:
ALL DIMENSIONS ARE IN INCHES
TOLERANCES: ANGLES± .5°
FRACTIONS±
DECIMALS
.xx± .02
.xxx±
BEND RADII
FILLETS & ROUNDS
SURFACE FINISH 250/
BREAK ALL SHARP EDGES

INTERPRET DRAWING IN ACCORDANCE WITH STANDARDS PRESCRIBED IN ASME Y14.100

DO NOT SCALE THIS DRAWING

PORT HUENEME DIVISION
NAVAL SURFACE WARFARE CENTER
4363 MISSILE WAY
PORT HUENEME, CA 93043-4307

PREPARED	AMSEC	06-07
CHECKED		
TECH LEAD		
BR HD		
ACCEPTED BY NAVSEA	(SIGNATURE DOES NOT DENOTE APPROVAL)	
APPROVED FOR NAVSEA	(SIGN ONLY IF ENGINEERING HAS BEEN "PROVED" BY MANUFACTURE AND TEST)	

DEPARTMENT OF THE NAVY
NAVAL SEA SYSTEMS COMMAND
WASHINGTON, D.C. 20376-5160

HEAVY UNREP-NAVY STANDARD
RAM TENSIONER

BACKING RING
CYLINDER/ACCUMULATOR PIPE

SIZE	CAGE CODE	NAVSEA DWG NO.	REV
C	53711	8287550	—

SCALE 1/1 | UNIT WT .6 LBS | SHEET 1 OF 1

NSWC 4120/4 (REV. 03-92)

NOTES:

1. INTERPRET BRAZING METHODS IN ACCORDANCE WITH ANSI/AWS A3.0 ANY ONE OF THE THREE METHODS PROVIDED MAY BE UTILIZED.

2. BRAZING PROCESS AND PROCEDURE SHALL BE IN ACCORDANCE WITH NAVSEA 0900-LP-001-7000, CLASS P-3V. GRADE V SIL-BRAZE-RINGS ARE PROVIDED IN THE TAILPIECES OF PIECE 3,4 AND 5. ANY SUPPLEMENTAL FACE FED BRAZE ROD USED SHALL BE GRADE V IN ACCORDANCE WITH QQ-B-654. BRAZE BEFORE INSTALLING O-RINGS.

3. AFTER ALL BRAZING IS COMPLETE, THE TUBING ASSEMBLY SHALL SHALL BE FLUSHED IN ACCORDANCE WITH MIL-STD-419, PARA 5.4. FLUSH BEFORE INSTALLING O-RINGS.

4. THIS ITEM SHALL BE HYDROSTATICALLY TESTED TO 100 PSIG AND HELD FOR 10 MINUTES WITHOUT LEAKAGE. ALL EQUIPMENT REQUIRED FOR TEST SHALL BE PROVIDED BY THE MANUFACTURER.

5. AFTER COMPLYING WITH NOTES 3 AND 4, PAINT WITH MATERIALS SPECIFIED IN PC 7 FOR SPECIAL PROCEDURE FOR RAM TENSIONER: STAINLESS STEEL AND BRONZE PARTS.

6. PRIOR TO ASSEMBLY APPLY LED-PLATE ANTISEIZE COMPOUND, PIECE 6, TO ALL THREADED SURFACES.

6.1 THE FOLLOWING ITEMS SHALL BE PROCURED FROM THE VENDOR(S) LISTED. A SUBSTITUTE ITEM SHALL NOT BE USED WITHOUT PRIOR APPROVAL BY THE NAVY.

PC 6: ANTISEIZE COMPOUND LED-PLATE.
APPROVED SOURCE OF SUPPLY:
ARMITE LABORATORIES
1560 SUPERIOR AVE, STE A4
COSTA MESA, CA 92627-3676
CODE IDENT: 84180
PART NO 250

7. STOCK SIZE IN REMARKS COLUMN OF PARTS LIST IS NOMINAL WITHOUT MANUFACTURING ALLOWANCE.

8. APPLY O-RING LUBRICANT, PC 9, TO O-RINGS PC 8 TO MATING SURFACES AND GROOVES. FOLLOW MANUFACTURER'S INSTRUCTIONS FOR APPLICATION.

8.1 PETROLEUM BASED O-RING LUBRICANTS SHALL NOT BE USED OR SUBSTITUTED FOR PC 9.

9. THE FOLLOWING ITEM(S) MAY BE PROCURED FROM THE VENDOR(S) LISTED.

9.1 PC 9: O-RING LUBRICANT (SILICONE),
APPROVED SOURCE OF SUPPLY:
PARKER HANNIFIN CORP, O-RING DIVISION
2360 PALUMBO DRIVE
LEXINGTON, KY 40509-1048
CAGE CODE: 02697
TRADE NAME: PARKER SUPER O-LUBE

10. LENGTH AND CONFIGURATION OF TUBE, PC 1, CAN VARY. ESTABLISH EXACT LENGTH AND CONFIGURATION AT NEXT ASSEMBLY.

REVISIONS				
ZONE	LTR	DESCRIPTION	DATE	APPROVED

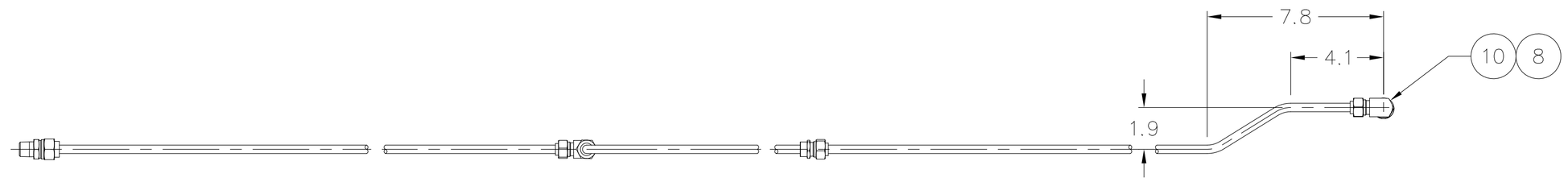

VIEW A-A

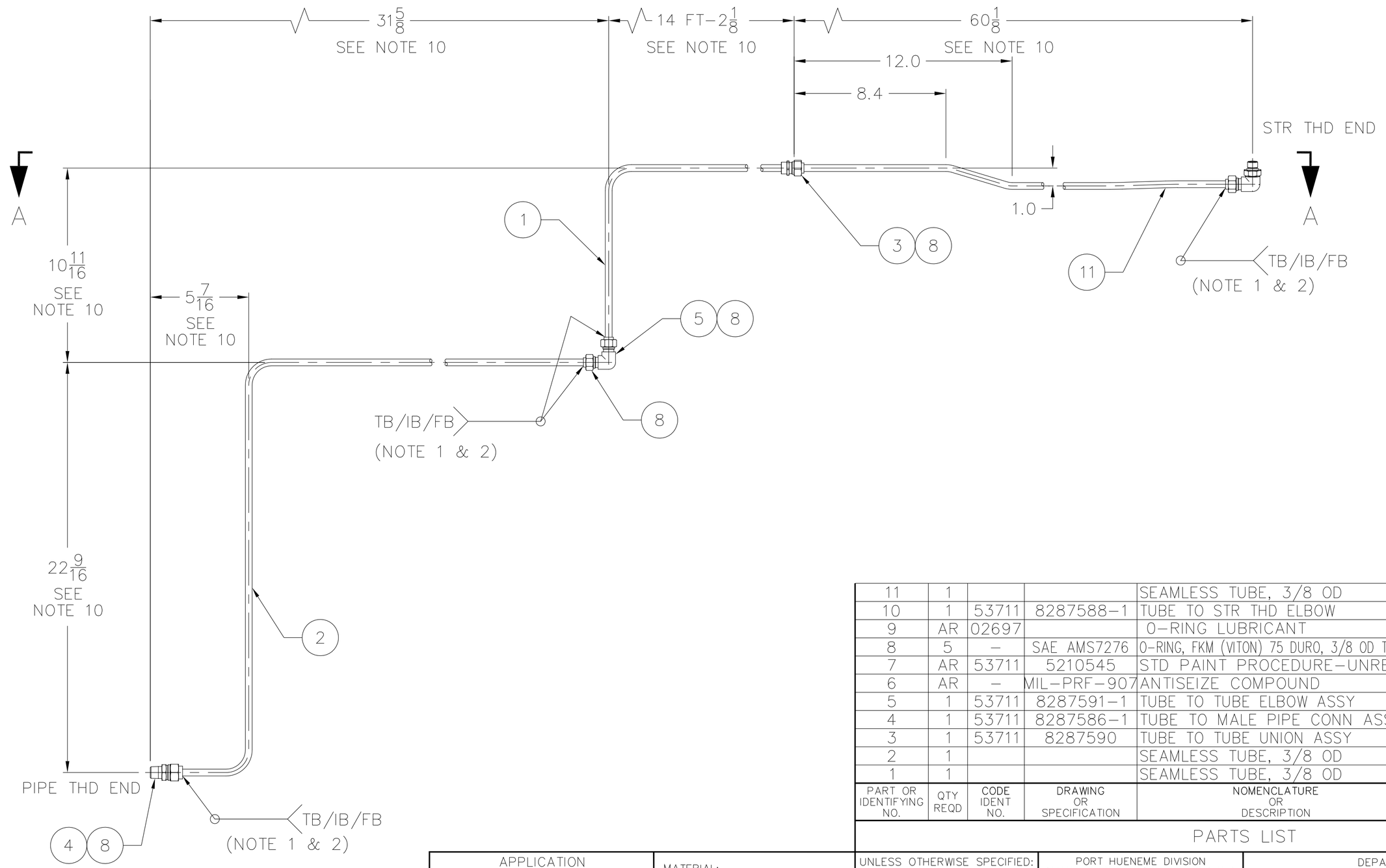

PART OR IDENTIFYING NO.	QTY REQD	CODE IDENT NO.	DRAWING OR SPECIFICATION	NOMENCLATURE OR DESCRIPTION	REMARKS
11	1			SEAMLESS TUBE, 3/8 OD	.065 WALL X 59-3/8 LG
10	1	53711	8287588-1	TUBE TO STR THD ELBOW	3/8 OD TUBE X 9/16-18UNF
9	AR	02697		O-RING LUBRICANT	SEE NOTE 8 AND 9
8	5	–	SAE AMS7276	O-RING, FKM (VITON) 75 DURO, 3/8 OD TUBE	SAE AS568-013
7	AR	53711	5210545	STD PAINT PROCEDURE-UNREP	SEE NOTE 5
6	AR	–	MIL-PRF-907	ANTISEIZE COMPOUND	SEE NOTE 6
5	1	53711	8287591-1	TUBE TO TUBE ELBOW ASSY	3/8 OD TUBE
4	1	53711	8287586-1	TUBE TO MALE PIPE CONN ASSY	3/8 OD TUBE X 3/8-18NPT
3	1	53711	8287590	TUBE TO TUBE UNION ASSY	3/8 OD TUBE
2	1			SEAMLESS TUBE, 3/8 OD	.065 WALL X 50-1/2 LG
1	1			SEAMLESS TUBE, 3/8 OD	.065 WALL X 14 FT-10-3/4 LG

PARTS LIST

APPLICATION	
NEXT ASSY	USED ON
8287500	8287500

MATERIAL:
PC 1 & 2: CRES PER ASTM A269 GRADE TP316 ANNEALED

UNLESS OTHERWISE SPECIFIED:
ALL DIMENSIONS ARE IN INCHES
TOLERANCES: ANGLES± .5°
FRACTIONS± 1/16
DECIMALS
.XX±
.XXX±
BEND RADII
FILLETS & ROUNDS
SURFACE FINISH ✓
BREAK ALL SHARP EDGES
INTERPRET DRAWING IN ACCORDANCE WITH STANDARDS PRESCRIBED IN ASME Y14.100
DO NOT SCALE THIS DRAWING

PORT HUENEME DIVISION
NAVAL SURFACE WARFARE CENTER
4363 MISSILE WAY
PORT HUENEME, CA 93043-4307

PREPARED	AMSEC	06-07
CHECKED		
TECH LEAD		
BR HD		
ACCEPTED BY NAVSEA	(SIGNATURE DOES NOT DENOTE APPROVAL)	
APPROVED FOR NAVSEA	(SIGN ONLY IF ENGINEERING HAS BEEN "PROVED" BY MANUFACTURE AND TEST)	

DEPARTMENT OF THE NAVY
NAVAL SEA SYSTEMS COMMAND
WASHINGTON, D.C. 20376-5160

HEAVY UNREP-NAVY STANDARD
RAM TENSIONER

RETURN TUBING ASSEMBLY

SIZE	CAGE CODE	NAVSEA DWG NO.	REV
D	53711	8287551	–

SCALE 1/4 | UNIT WT 5.3 LBS | SHEET 1 OF 1

8287551

NOTICE OF CONFIGURATION CONTROL

THIS DRAWING DEFINES AN ITEM OF UNDERWAY REPLENISHMENT (UNREP) STANDARD HARDWARE. NO REVISION TO THIS DRAWING OR THE HARDWARE REPRESENTED BY IT IS AUTHORIZED WITHOUT THE WRITTEN APPROVAL OF THE NAVAL SEA SYSTEMS COMMAND.

DISTRIBUTION STATEMENT C: DISTRIBUTION AUTHORIZED TO U.S. GOVERNMENT AGENCIES AND THEIR CONTRACTORS: OTHER REQUESTS MUST BE REFERRED TO COMNAVSEA OR THE COGNIZANT NAVSEA CODE.

WARNING: THIS DOCUMENT CONTAINS TECHNICAL DATA WHOSE EXPORT IS RESTRICTED BY THE ARMS EXPORT CONTROL ACT (TITLE 22, U.S.C. SEC. 2751 ET SEQ.) OR EXECUTIVE ORDER 12470. VIOLATIONS OF THESE EXPORT LAWS ARE SUBJECT TO SEVERE CRIMINAL PENALTIES.

DESTRUCTION NOTICE: DESTROY BY ANY METHOD THAT WILL PREVENT DISCLOSURE OF CONTENTS OR RECONSTRUCTION OF THE DOCUMENT.

NSWC 4120/8 (REV. 03-92)

REVISIONS				
ZONE	LTR	DESCRIPTION	DATE	APPROVED

NOTES:

1. STOCK SIZE IN REMARKS COLUMN OF PARTS LIST IS NOMINAL WITHOUT MANUFACTURING ALLOWANCE.

2. BRAZING PROCESS AND PROCEDURE SHALL BE IN ACCORDANCE WITH NAVSEA 0900-LP-001-7000, CLASS P-3V. GRADE V SIL-BRAZE-RINGS ARE PROVIDED IN THE TAILPIECES OF PIECE 3,4 AND 5. ANY SUPPLEMENTAL FACE FED BRAZE ROD USED SHALL BE GRADE V IN ACCORDANCE WITH QQ-B-654. BRAZE BEFORE INSTALLING O-RINGS.

3. LENGTH AND CONFIGURATION OF TUBE, PC 1 AND 2, CAN VARY. ESTABLISH EXACT LENGTH AND CONFIGURATION AT NEXT ASSEMBLY.

4. AFTER ALL BRAZING IS COMPLETE, THE TUBING ASSEMBLY SHALL BE FLUSHED IN ACCORDANCE WITH MIL-STD-419, PARA 5.4. REMOVE O-RINGS PRIOR TO PERFORMING THIS OPERATION.

5. THIS ITEM SHALL BE HYDROSTATICALLY TESTED TO 3,750 PSIG AND HELD FOR 10 MINUTES WITHOUT LEAKAGE. ALL EQUIPMENT REQUIRED FOR TEST SHALL BE PROVIDED BY THE MANUFACTURER.

6. AFTER HYDROSTATIC TEST, PAINT ALL EXTERIOR SURFACES USING PROCEDURES AND MATERIALS SPECIFIED IN PC 7 USING SPECIAL PROCEDURE FOR RAM TENSIONER: STAINLESS STEEL AND BRONZE PARTS.

7. PRIOR TO ASSEMBLY, APPLY LED-PLATE ANTISEIZE COMPOUND, PC 6, TO ALL THREAD SURFACES.

7.1 THE FOLLOWING ITEM SHALL BE PROCURED FROM THE VENDOR(S) LISTED. A SUBSTITUTE ITEM SHALL NOT BE USED WITHOUT PRIOR APPROVAL BY THE NAVY.

PC 6: ANTISEIZE COMPOUND LED-PLATE.
APPROVED SOURCE OF SUPPLY:
ARMITE LABORATORIES
1560 SUPERIOR AVE, STE A4
COSTA MESA, CA 92627-3676
CODE IDENT: 84180
PART NO 250

8. VALVE MUST BE INSTALLED WITH FLOW ARROW IN DIRECTION SHOWN.

9. APPLY O-RING LUBRICANT, PC 10, TO O-RINGS PC 8 & 9 TO MATING SURFACES AND GROOVES. FOLLOW MANUFACTURER'S INSTRUCTIONS FOR APPLICATION.

9.1 PETROLEUM BASED O-RING LUBRICANTS SHALL NOT BE USED OR SUBSTITUTED FOR PC 10.

10. THE FOLLOWING ITEM(S) MAY BE PROCURED FROM THE VENDOR(S) LISTED.

10.1 PC 10: O-RING LUBRICANT (SILICONE),
APPROVED SOURCE OF SUPPLY:
PARKER HANNIFIN CORP, O-RING DIVISION
2360 PALUMBO DRIVE
LEXINGTON, KY 40509-1048
CAGE CODE: 02697
TRADE NAME: PARKER SUPER O-LUBE

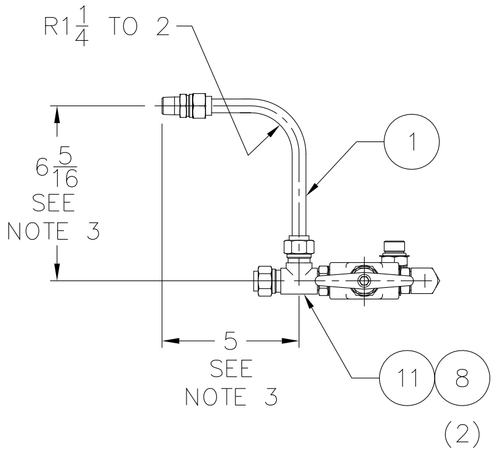

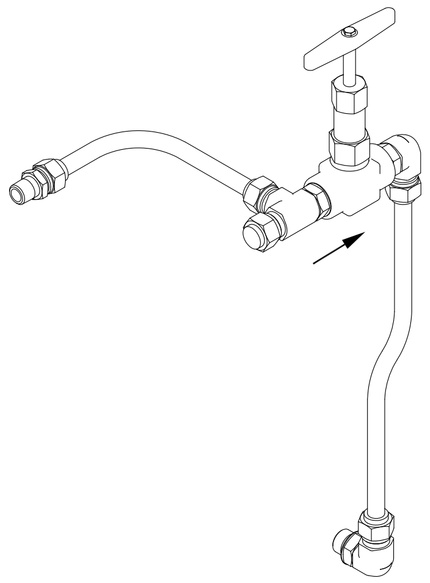

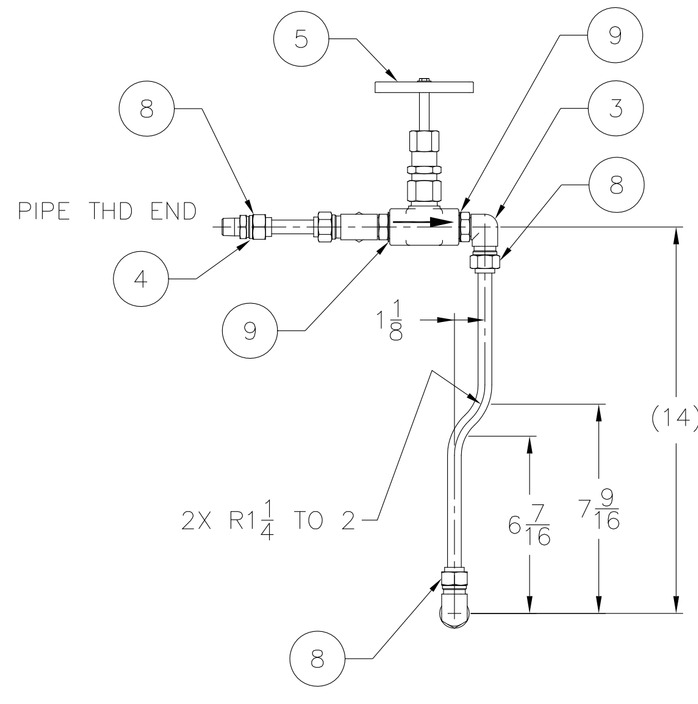

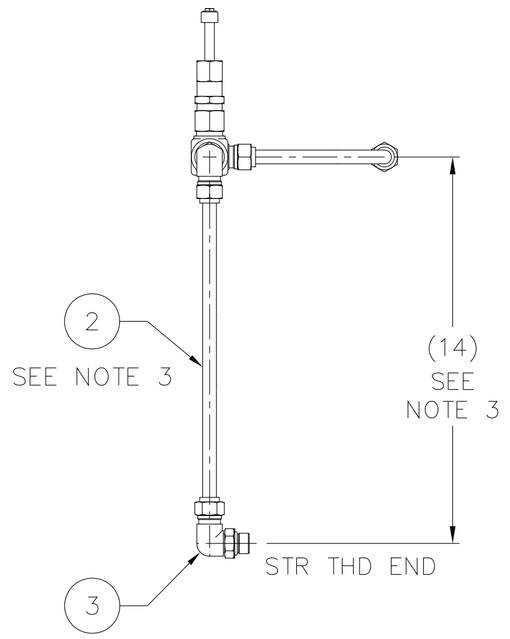

PART OR IDENTIFYING NO.	QTY REQD	CODE IDENT NO.	DRAWING OR SPECIFICATION	NOMENCLATURE OR DESCRIPTION	REMARKS
11	1	53711	8287587	UNION TUBE TEE ASSY	1/2 OD TUBE
10	AR	02697		O-RING LUBRICANT	SEE NOTE 9 AND 10
9	2	–	SAE AMS7259	O-RING, FKM (VITON) 90 DURO, 1/2 OD BOSS	SAE AS568-908
8	5	–	SAE AMS7276	O-RING, FKM (VITON) 75 DURO, 1/2 OD TUBE	SAE AS568-015
7	AR	53711	5210545	STD PAINT PROCEDURE-UNREP	SEE NOTE 6
6	AR	–	MIL-PRF-907	ANTISEIZE COMPOUND	SEE NOTE 7
5	1	53711	8287553-2	GLOBE VALVE	
4	1	53711	8287586-2	MALE PIPE TO TUBE CONN ASSY	1/2 OD TUBE X 3/8-18NPT
3	2	53711	8287588-2	TUBE TO STR THD ELBOW ASSY	1/2 OD TUBE X 3/4-16UNF
2	1	–	–	SEAMLESS TUBE, 1/2 OD	.065 WALL X 14 LG
1	1	–	–	SEAMLESS TUBE, 1/2 OD	.065 WALL X 3 13/16 LG

PARTS LIST

APPLICATION	
NEXT ASSY	USED ON
8287500	8287500

MATERIAL:
PC 1, 2 & 12
CRES PER
ASTM A269
GRADE TP316
ANNEALED

UNLESS OTHERWISE SPECIFIED:
ALL DIMENSIONS ARE IN INCHES
TOLERANCES: ANGLES±
FRACTIONS± 1/16
DECIMALS
.XX±
.XXX±
BEND RADII
FILLETS & ROUNDS
SURFACE FINISH ✓
BREAK ALL SHARP EDGES
INTERPRET DRAWING IN ACCORDANCE WITH STANDARDS PRESCRIBED IN ASME Y14.100
DO NOT SCALE THIS DRAWING

PORT HUENEME DIVISION
NAVAL SURFACE WARFARE CENTER
4363 MISSILE WAY
PORT HUENEME, CA 93043-4307

PREPARED	AMSEC	06-07
CHECKED		
TECH LEAD		
BR HD		
ACCEPTED BY NAVSEA	(SIGNATURE DOES NOT DENOTE APPROVAL)	
APPROVED FOR NAVSEA	(SIGN ONLY IF ENGINEERING HAS BEEN "PROVED" BY MANUFACTURE AND TEST)	

DEPARTMENT OF THE NAVY
NAVAL SEA SYSTEMS COMMAND
WASHINGTON, D.C. 20376-5160

HEAVY UNREP – NAVY STANDARD
RAM TENSIONER

DISCHARGE TUBING ASSEMBLY

SIZE	CAGE CODE	NAVSEA DWG NO.	REV
D	53711	8287552	–

SCALE 1/4 | UNIT WT 3.1 LBS | SHEET 1 OF 1

8287552

NOTICE OF CONFIGURATION CONTROL

THIS DRAWING DEFINES AN ITEM OF UNDERWAY REPLENISHMENT (UNREP) STANDARD HARDWARE. NO REVISION TO THIS DRAWING OR THE HARDWARE REPRESENTED BY IT IS AUTHORIZED WITHOUT THE WRITTEN APPROVAL OF THE NAVAL SEA SYSTEMS COMMAND.

DISTRIBUTION STATEMENT C: DISTRIBUTION AUTHORIZED TO U.S. GOVERNMENT AGENCIES AND THEIR CONTRACTORS: OTHER REQUESTS MUST BE REFERRED TO COMNAVSEA OR THE COGNIZANT NAVSEA CODE.

WARNING: THIS DOCUMENT CONTAINS TECHNICAL DATA WHOSE EXPORT IS RESTRICTED BY THE ARMS EXPORT CONTROL ACT (TITLE 22, U.S.C. SEC. 2751 ET SEQ.) OR EXECUTIVE ORDER 12470. VIOLATIONS OF THESE EXPORT LAWS ARE SUBJECT TO SEVERE CRIMINAL PENALTIES.

DESTRUCTION NOTICE: DESTROY BY ANY METHOD THAT WILL PREVENT DISCLOSURE OF CONTENTS OR RECONSTRUCTION OF THE DOCUMENT.

REVISIONS				
ZONE	LTR	DESCRIPTION	DATE	APPROVED

SUGGESTED SOURCE(S) OF SUPPLY				
SUPPLIER/VENDOR DATA				
CAGE	DASH NUMBER	PART/DRAWING NUMBER	NAME & ADDRESS	APPLICATION
97399	-1	10F056-MS	DRAGON VALVES, INC 13457 EXCELSIOR DRIVE P.O. BOX 489 NORWALK, CA 90650	HEAVY UNREP NAVY STANDARD RAM TENSIONER
	-2	10F058-MS		

TABLE A

DASH NO.	TUBING SIZE	DIMENSIONS				WEIGHT LBS
		A	B	C	D	
-1	3/8 OD	2.00	4.63	2.56	9/16-18UNF-2B	1.1
-2	1/2 OD	2.50	5.38	3.56	3/4-16UNF-2B	1.2

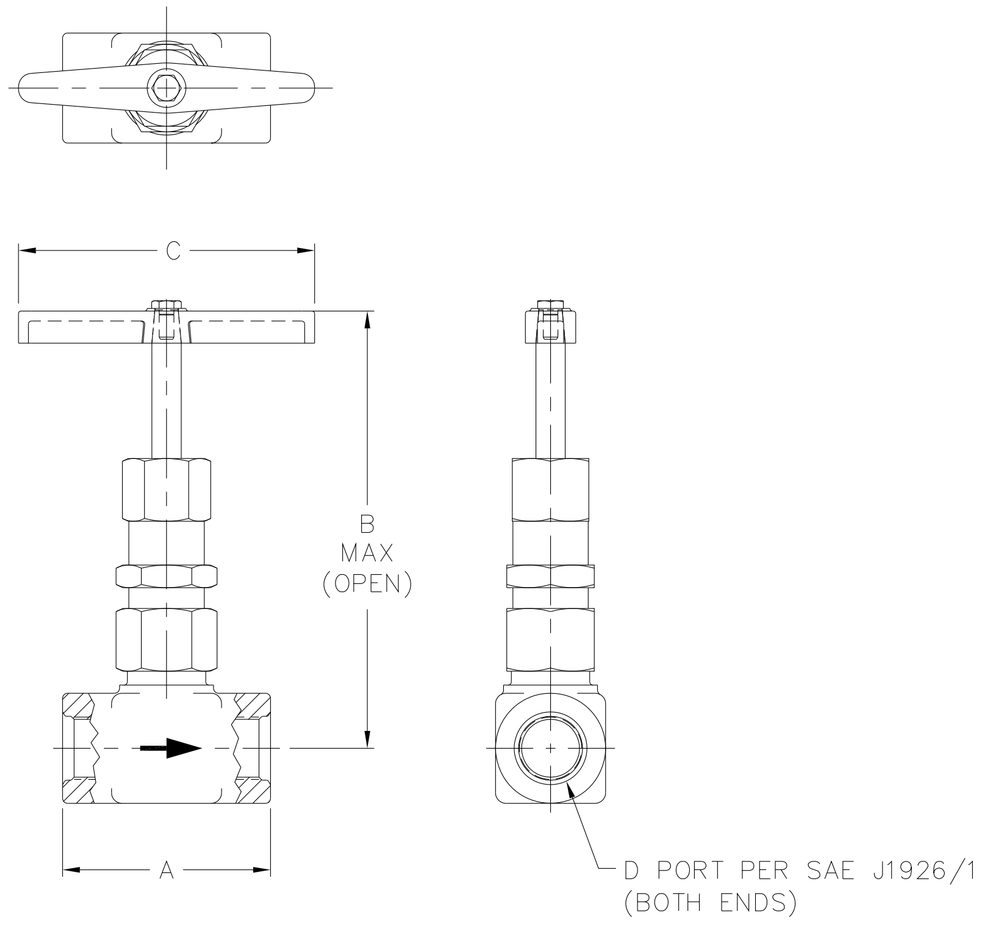

NOTES:

1. IDENTIFICATION OF THE "SUGGESTED SOURCE(S) OF SUPPLY" HEREON IS NOT TO BE CONSTRUED AS A GUARANTEE OF PRESENT OR CONTINUED AVAILABILITY AS A SOURCE OF SUPPLY FOR THE ITEM DESCRIBED ON THE DRAWING.
2. THE SUGGESTED SOURCE(S) LISTED ARE NOT INTENDED TO REPRESENT THE ONLY SOURCE(S) FOR THE ITEM(S).
3. ALL MATERIALS USED SHALL BE COMPATIBLE WITH PHOSPHATE ESTER HYDRAULIC FLUID PER MIL-H-19457 (REV C OR LATER). VALVE SHALL HAVE A STAINLESS STEEL BODY AND A MONEL STEM.
4. VALVE SHALL BE RATED FOR A PRESSURE OF 2500 PSI MINIMUM AND SHALL WITHSTAND A MINIMUM HYDROSTATIC SHELL TEST PRESSURE OF 3750 PSI.
5. VALVE SHALL OPEN AND CLOSE FULLY WITH A TANGENTIAL FORCE AT THE HANDLE OF 50 POUNDS OR LESS.
6. VALVE SHALL BE SHUTOFF OR NEEDLE TYPE AND SHALL BE SUPPLIED WITH A FLOW DIRECTION ARROW AS SHOWN.
7. VALVE SHALL HAVE A MINIMUM FLOW COEFFICIENT (Cv) OF 1.0 WITH VALVE FULLY OPEN.

SPECIFICATION CONTROL DRAWING

PART OR IDENTIFYING NO.	QTY REQD	CODE IDENT NO.	DRAWING OR SPECIFICATION	NOMENCLATURE OR DESCRIPTION	REMARKS

PARTS LIST

NOTICE OF CONFIGURATION CONTROL

THIS DRAWING DEFINES AN ITEM OF UNDERWAY REPLENISHMENT (UNREP) STANDARD HARDWARE. NO REVISION TO THIS DRAWING OR THE HARDWARE REPRESENTED BY IT IS AUTHORIZED WITHOUT THE WRITTEN APPROVAL OF THE NAVAL SEA SYSTEMS COMMAND.

DISTRIBUTION STATEMENT C: DISTRIBUTION AUTHORIZED TO U.S. GOVERNMENT AGENCIES AND THEIR CONTRACTORS: OTHER REQUESTS MUST BE REFERRED TO COMNAVSEA OR THE COGNIZANT NAVSEA CODE.

WARNING: THIS DOCUMENT CONTAINS TECHNICAL DATA WHOSE EXPORT IS RESTRICTED BY THE ARMS EXPORT CONTROL ACT (TITLE 22, U.S.C. SEC. 2751 ET SEQ.) OR EXECUTIVE ORDER 12470. VIOLATIONS OF THESE EXPORT LAWS ARE SUBJECT TO SEVERE CRIMINAL PENALTIES.

DESTRUCTION NOTICE: DESTROY BY ANY METHOD THAT WILL PREVENT DISCLOSURE OF CONTENTS OR RECONSTRUCTION OF THE DOCUMENT.

APPLICATION	
NEXT ASSY	USED ON
8287500	8287500
8287552	

MATERIAL: CRES 316

UNLESS OTHERWISE SPECIFIED:
ALL DIMENSIONS ARE IN INCHES
TOLERANCES: ANGLES±
FRACTIONS±
DECIMALS
.XX±
.XXX±
BEND RADII
FILLETS & ROUNDS
SURFACE FINISH √
BREAK ALL SHARP EDGES
INTERPRET DRAWING IN ACCORDANCE WITH STANDARDS PRESCRIBED IN ASME Y14.100
DO NOT SCALE THIS DRAWING

PORT HUENEME DIVISION
NAVAL SURFACE WARFARE CENTER
4363 MISSILE WAY
PORT HUENEME, CA 93043-4307

PREPARED	AMSEC	06-07
CHECKED		
TECH LEAD		
BR HD		
ACCEPTED BY NAVSEA	(SIGNATURE DOES NOT DENOTE APPROVAL)	
APPROVED FOR NAVSEA	(SIGN ONLY IF ENGINEERING HAS BEEN "PROVED" BY MANUFACTURE AND TEST)	

DEPARTMENT OF THE NAVY
NAVAL SEA SYSTEMS COMMAND
WASHINGTON, D.C. 20376-5160

HEAVY UNREP - NAVY STANDARD
RAM TENSIONER

GLOBE VALVE

SIZE	CAGE CODE	NAVSEA DWG NO.	REV
D	53711	8287553	-

SCALE 1/1 | UNIT WT TABLE A | SHEET 1 OF 1

8287553

NSWC 4120/8 (REV 03-92)

NOTES:

1. INTERPRET BRAZING METHODS IN ACCORDANCE WITH ANSI/AWS A3.0. ANY ONE OF THE THREE METHODS PROVIDED MAY BE UTILIZED.

2. BRAZING PROCESS AND PROCEDURE SHALL BE IN ACCORDANCE WITH NAVSEA 0900-LP-001-7000, CLASS P-3V. GRADE V SIL-BRAZE-RINGS ARE PROVIDED IN THE TAILPIECE OF PIECE 2. ANY SUPPLEMENTAL FACE FED BRAZE ROD USED SHALL BE GRADE V IN ACCORDANCE WITH QQ-B-654. BRAZE BEFORE INSTALLING O-RINGS.

3. AFTER ALL BRAZING IS COMPLETE, THE TUBING ASSEMBLY SHALL BE FLUSHED IN ACCORDANCE WITH MIL-STD-419, PARA 5.4. FLUSH BEFORE INSTALLING O-RINGS.

4. THIS ITEM SHALL BE HYDROSTATICALLY TESTED TO 100 PSIG AND HELD FOR 30 MINUTES WITHOUT LEAKAGE. ALL EQUIPMENT REQUIRED FOR TEST SHALL BE PROVIDED BY THE MANUFACTURER.

5. AFTER COMPLYING WITH NOTES 3 AND 4, PAINT WITH MATERIALS SPECIFIED IN PC 3 FOR SPECIAL PROCEDURE FOR RAM TENSIONER: STAINLESS STEEL AND BRONZE PARTS.

6. STOCK SIZE IN REMARKS COLUMN OF PARTS LIST IS NOMINAL WITHOUT MANUFACTURING ALLOWANCE.

7. APPLY O-RING LUBRICANT, PC 5, TO O-RINGS PCS 4 TO MATING SURFACES AND GROOVES. FOLLOW MANUFACTURER'S INSTRUCTIONS FOR APPLICATION.

7.1 PETROLEUM BASED O-RING LUBRICANTS SHALL NOT BE USED OR SUBSTITUTED FOR PC 5.

8. THE FOLLOWING ITEM(S) MAY BE PROCURED FROM THE VENDOR(S) LISTED.

8.1 PC 5: O-RING LUBRICANT (SILICONE),
APPROVED SOURCE OF SUPPLY:
PARKER HANNIFIN CORP, O-RING DIVISION
2360 PALUMBO DRIVE
LEXINGTON, KY 40509-1048
CAGE CODE: 02697
TRADE NAME: PARKER SUPER O-LUBE

9. LENGTH AND CONFIGURATION OF TUBE, PC 1, CAN VARY. ESTABLISH EXACT LENGTH AND CONFIGURATION AT NEXT ASSEMBLY.

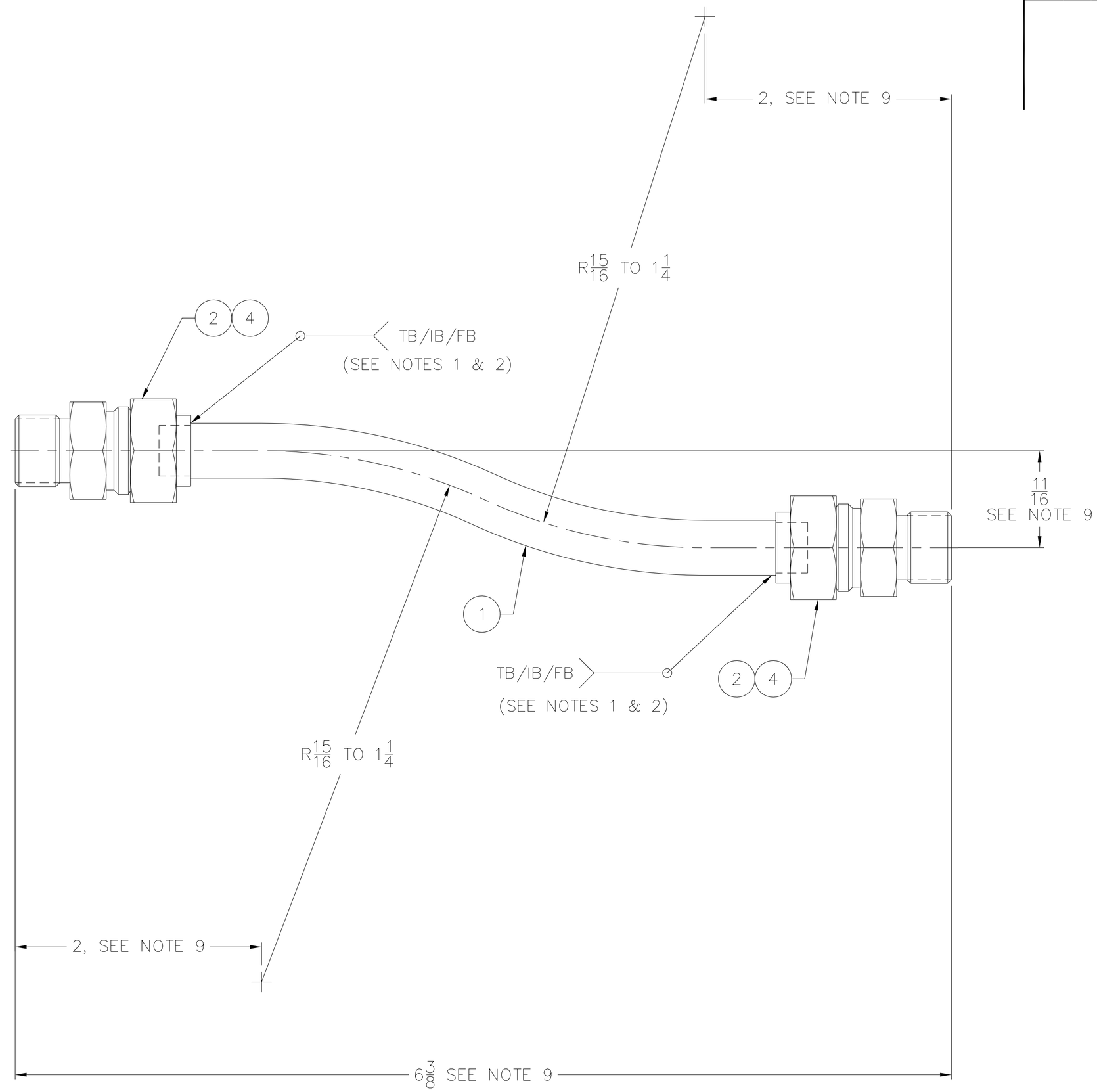

PART OR IDENTIFYING NO.	QTY REQD	CODE IDENT NO.	DRAWING OR SPECIFICATION	NOMENCLATURE OR DESCRIPTION	REMARKS
5	AR	02697		O-RING LUBRICANT	SEE NOTE 7 AND 8
4	2	–	SAE AMS7276	O-RING, FKM (VITON) 75 DURO, 3/8 OD TUBE	SAE AS568-013
3	AR	53711	5210545	STD PAINT PROCEDURE-UNREP	SEE NOTE 5
2	2	53711	8287596-1	TUBE TO STR THD CONN ASSY	3/8 OD TUBE X 9/16-18UNF
1	1	–	–	SEAMLESS TUBE, 3/8 OD	.065 WALL X 4 9/16 LG

PARTS LIST

APPLICATION	
NEXT ASSY	USED ON
8287500	8287500

MATERIAL:
PC 1: CRES
PER ASTM A269
GRADE TP316
ANNEALED

UNLESS OTHERWISE SPECIFIED:
ALL DIMENSIONS ARE IN INCHES
TOLERANCES: ANGLES± FRACTIONS± 1/16
DECIMALS
.XX±
.XXX±
BEND RADII
FILLETS & ROUNDS
SURFACE FINISH √
BREAK ALL SHARP EDGES
INTERPRET DRAWING IN ACCORDANCE WITH STANDARDS PRESCRIBED IN ASME Y14.100
DO NOT SCALE THIS DRAWING

PORT HUENEME DIVISION
NAVAL SURFACE WARFARE CENTER
4363 MISSILE WAY
PORT HUENEME, CA 93043-4307

PREPARED	AMSEC	06-07
CHECKED		
TECH LEAD		
BR HD		
ACCEPTED BY NAVSEA	(SIGNATURE DOES NOT DENOTE APPROVAL)	
APPROVED FOR NAVSEA	(SIGN ONLY IF ENGINEERING HAS BEEN "PROVED" BY MANUFACTURE AND TEST)	

DEPARTMENT OF THE NAVY
NAVAL SEA SYSTEMS COMMAND
WASHINGTON, D.C. 20376-5160

HEAVY UNREP-NAVY STANDARD
RAM TENSIONER

BLEED TUBING CONNECTOR ASSEMBLY

SIZE	CAGE CODE	NAVSEA DWG NO.	REV
D	53711	8287554	–

SCALE 2/1 | UNIT WT 0.3 LBS | SHEET 1 OF 1

8287554

NOTICE OF CONFIGURATION CONTROL

THIS DRAWING DEFINES AN ITEM OF UNDERWAY REPLENISHMENT (UNREP) STANDARD HARDWARE. NO REVISION TO THIS DRAWING OR THE HARDWARE REPRESENTED BY IT IS AUTHORIZED WITHOUT THE WRITTEN APPROVAL OF THE NAVAL SEA SYSTEMS COMMAND.

DISTRIBUTION STATEMENT C: DISTRIBUTION AUTHORIZED TO U.S. GOVERNMENT AGENCIES AND THEIR CONTRACTORS: OTHER REQUESTS MUST BE REFERRED TO COMNAVSEA OR THE COGNIZANT NAVSEA CODE.

WARNING: THIS DOCUMENT CONTAINS TECHNICAL DATA WHOSE EXPORT IS RESTRICTED BY THE ARMS EXPORT CONTROL ACT (TITLE 22, U.S.C. SEC. 2751 ET SEQ.) OR EXECUTIVE ORDER 12470. VIOLATIONS OF THESE EXPORT LAWS ARE SUBJECT TO SEVERE CRIMINAL PENALTIES.

DESTRUCTION NOTICE: DESTROY BY ANY METHOD THAT WILL PREVENT DISCLOSURE OF CONTENTS OR RECONSTRUCTION OF THE DOCUMENT.

REVISIONS

ZONE	LTR	DESCRIPTION	DATE	APPROVED

NSWC 4120/8 (REV 03-92)

NOTES:

1. PAINT ALL SURFACES USING PROCEDURES AND MATERIALS SPECIFIED IN PC 1 FOR SPECIAL PROCEDURE FOR RAM TENSIONERS.

REVISIONS				
ZONE	LTR	DESCRIPTION	DATE	APPROVED

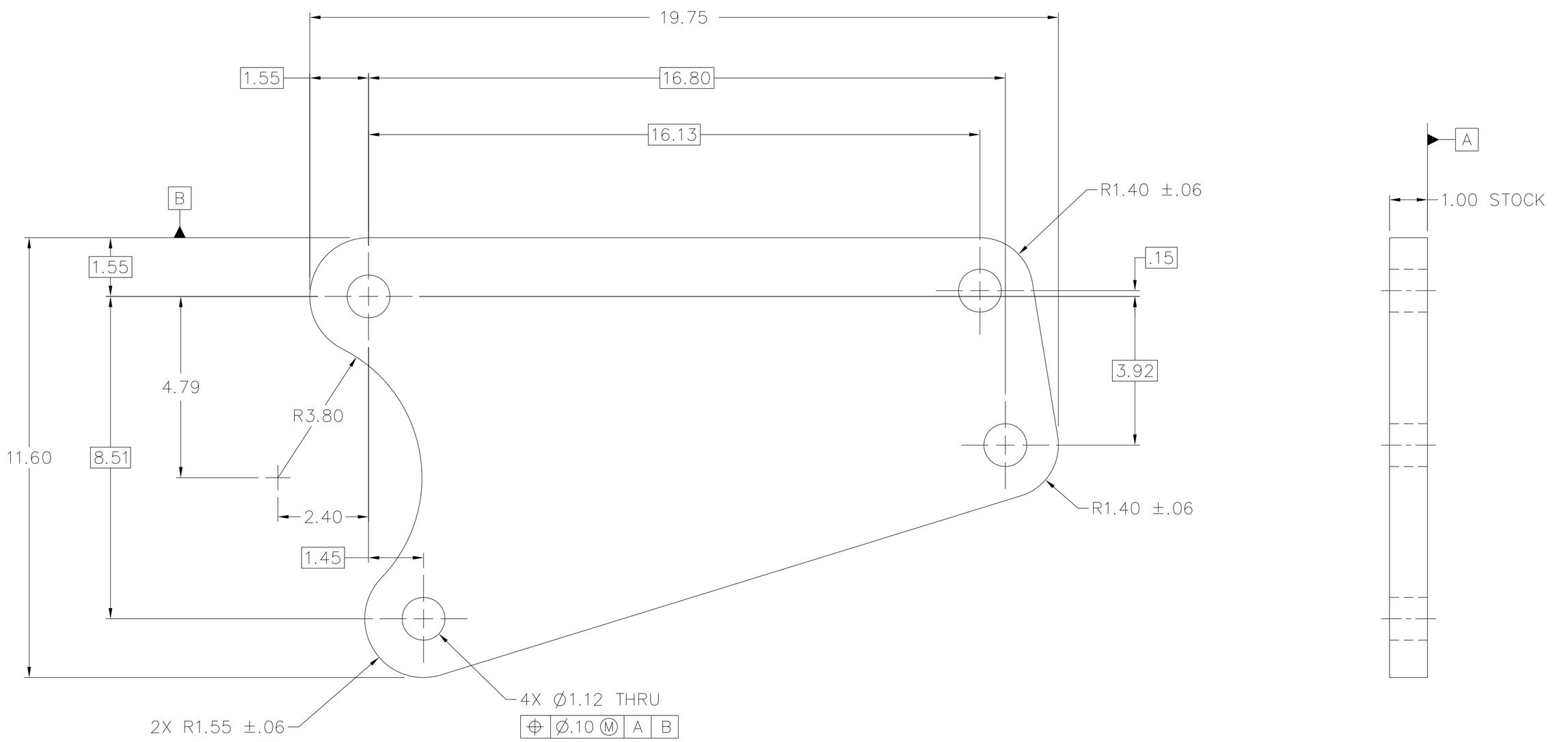

PART OR IDENTIFYING NO.	QTY REQD	CODE IDENT NO.	DRAWING OR SPECIFICATION	NOMENCLATURE OR DESCRIPTION	REMARKS
1	AR	53711	5210545	STD PAINT PROCEDURE–UNREP	SEE NOTE 1

PARTS LIST

NOTICE OF CONFIGURATION CONTROL

THIS DRAWING DEFINES AN ITEM OF UNDERWAY REPLENISHMENT (UNREP) STANDARD HARDWARE. NO REVISION TO THIS DRAWING OR THE HARDWARE REPRESENTED BY IT IS AUTHORIZED WITHOUT THE WRITTEN APPROVAL OF THE NAVAL SEA SYSTEMS COMMAND.

DISTRIBUTION STATEMENT C: DISTRIBUTION AUTHORIZED TO U.S. GOVERNMENT AGENCIES AND THEIR CONTRACTORS: OTHER REQUESTS MUST BE REFERRED TO COMNAVSEA OR THE COGNIZANT NAVSEA CODE.

WARNING: THIS DOCUMENT CONTAINS TECHNICAL DATA WHOSE EXPORT IS RESTRICTED BY THE ARMS EXPORT CONTROL ACT (TITLE 22, U.S.C. SEC. 2751 ET SEQ.) OR EXECUTIVE ORDER 12470. VIOLATIONS OF THESE EXPORT LAWS ARE SUBJECT TO SEVERE CRIMINAL PENALTIES.

DESTRUCTION NOTICE: DESTROY BY ANY METHOD THAT WILL PREVENT DISCLOSURE OF CONTENTS OR RECONSTRUCTION OF THE DOCUMENT.

APPLICATION	
NEXT ASSY	USED ON
8287500	8287500

MATERIAL:
STEEL
PER ASTM A36
OR
LOW ALLOY HIGH
STRENGTH STEEL
PER ASTM A572
GRADE 50
OR ASTM A588
GRADE B

UNLESS OTHERWISE SPECIFIED:
ALL DIMENSIONS ARE IN INCHES
TOLERANCES: ANGLES± .5°
FRACTIONS±
DECIMALS
.XX± .02
.XXX±
BEND RADII
FILLETS & ROUNDS .250/
SURFACE FINISH √
BREAK ALL SHARP EDGES
INTERPRET DRAWING IN ACCORDANCE WITH STANDARDS PRESCRIBED IN ASME Y14.100
DO NOT SCALE THIS DRAWING

PORT HUENEME DIVISION
NAVAL SURFACE WARFARE CENTER
4363 MISSILE WAY
PORT HUENEME, CA 93043–4307

PREPARED	AMSEC	06–07
CHECKED		
TECH LEAD		
BR HD		
ACCEPTED BY NAVSEA		(SIGNATURE DOES NOT DENOTE APPROVAL)
APPROVED FOR NAVSEA		(SIGN ONLY IF ENGINEERING HAS BEEN "PROVED" BY MANUFACTURE AND TEST)

DEPARTMENT OF THE NAVY
NAVAL SEA SYSTEMS COMMAND
WASHINGTON, D.C. 20376–5160

HEAVY UNREP–NAVY STANDARD
RAM TENSIONER

ACCUMULATOR BRACKET

SIZE	CAGE CODE	NAVSEA DWG NO.	REV
D	53711	8287555	–

SCALE 1/2 | UNIT WT 45.5 LBS | SHEET 1 OF 1

8287555

NSWC 4120/8 (REV 03–92)

NOTES:

1. SPACER THICKNESS TO BE DETERMINED AT NEXT ASSEMBLY.

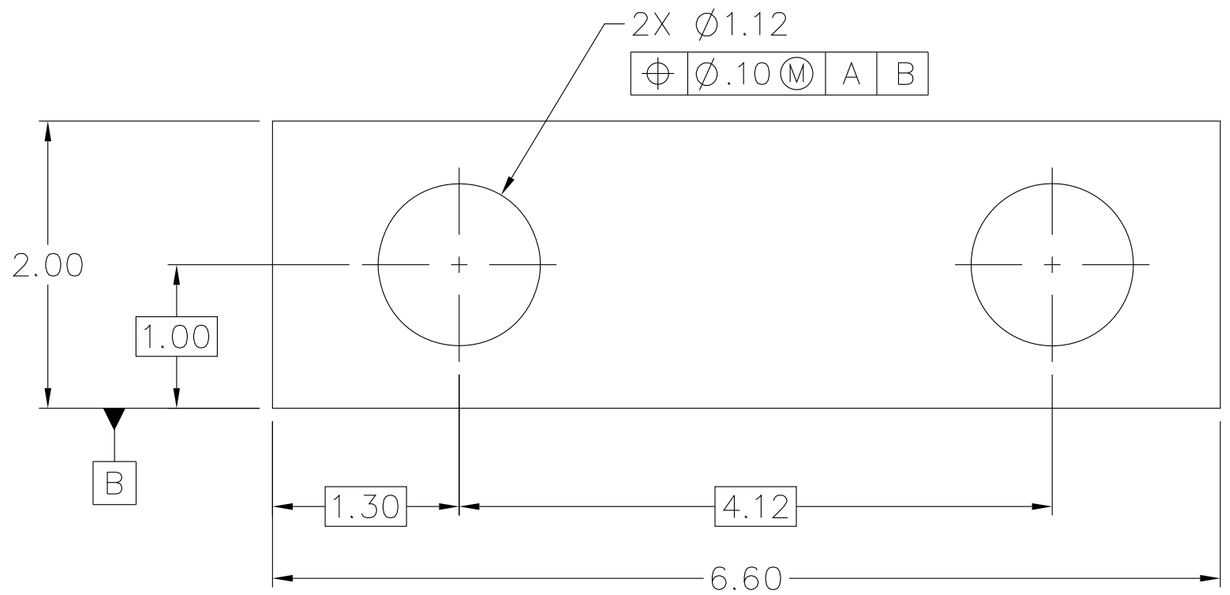

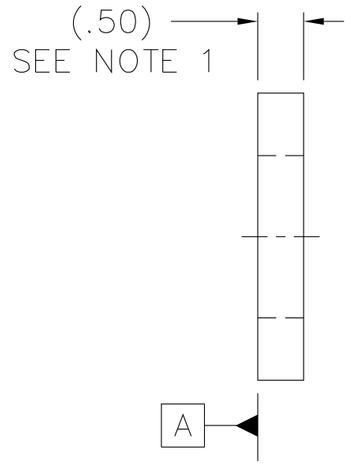

REVISIONS				
ZONE	LTR	DESCRIPTION	DATE	APPROVED

8287556

DISTRIBUTION STATEMENT C: DISTRIBUTION AUTHORIZED TO U.S. GOVERNMENT AGENCIES AND THEIR CONTRACTORS; OTHER REQUESTS MUST BE REFERRED TO COMNAVSEA OR THE COGNIZANT NAVSEA CODE.

WARNING: THIS DOCUMENT CONTAINS TECHNICAL DATA WHOSE EXPORT IS RESTRICTED BY THE ARMS EXPORT CONTROL ACT (TITLE 22, U.S.C. SEC. 2751 ET SEQ.) OR EXECUTIVE ORDER 12470. VIOLATIONS OF THESE EXPORT LAWS ARE SUBJECT TO SEVERE CRIMINAL PENALTIES.

DESTRUCTION NOTICE: DESTROY BY ANY METHOD THAT WILL PREVENT DISCLOSURE OF CONTENTS OR RECONSTRUCTION OF THE DOCUMENT.

PART OR IDENTIFYING NO.	QTY REQD	CODE IDENT NO.	DRAWING OR SPECIFICATION	NOMENCLATURE OR DESCRIPTION	REMARKS

PARTS LIST

NOTICE OF CONFIGURATION CONTROL

THIS DRAWING DEFINES AN ITEM OF UNDERWAY REPLENISHMENT (UNREP) STANDARD HARDWARE. NO REVISION TO THIS DRAWING OR THE HARDWARE REPRESENTED BY IT IS AUTHORIZED WITHOUT THE WRITTEN APPROVAL OF THE NAVAL SEA SYSTEMS COMMAND.

APPLICATION	
NEXT ASSY	USED ON
8287500	8287500

MATERIAL:
CRES
TY 316
PER ASTM A240

UNLESS OTHERWISE SPECIFIED:
ALL DIMENSIONS ARE IN INCHES
TOLERANCES: ANGLES±
FRACTIONS±
DECIMALS
.xx± .02
.xxx±
BEND RADII
FILLETS & ROUNDS 250/
SURFACE FINISH √
BREAK ALL SHARP EDGES

INTERPRET DRAWING IN ACCORDANCE WITH STANDARDS PRESCRIBED IN ASME Y14.100

DO NOT SCALE THIS DRAWING

PORT HUENEME DIVISION
NAVAL SURFACE WARFARE CENTER
4363 MISSILE WAY
PORT HUENEME, CA 93043-4307

PREPARED	AMSEC	06-07
CHECKED		
TECH LEAD		
BR HD		
ACCEPTED BY NAVSEA	(SIGNATURE DOES NOT DENOTE APPROVAL)	
APPROVED FOR NAVSEA	(SIGN ONLY IF ENGINEERING HAS BEEN "PROVED" BY MANUFACTURE AND TEST)	

DEPARTMENT OF THE NAVY
NAVAL SEA SYSTEMS COMMAND
WASHINGTON, D.C. 20376-5160

HEAVY UNREP-NAVY STANDARD
RAM TENSIONER

SPACER

SIZE	CAGE CODE	NAVSEA DWG NO.	REV
C	53711	8287556	—

SCALE 1/1 | UNIT WT 2.2 LBS | SHEET 1 OF 1

NSWC 4120/4 (REV. 03-92)

NOTES:

1. INTERPRET BRAZING METHODS IN ACCORDANCE WITH ANSI/AWS A3.0 ANY ONE OF THE THREE METHODS PROVIDED MAY BE UTILIZED.

2. BRAZING PROCESS AND PROCEDURE SHALL BE IN ACCORDANCE WITH NAVSEA 0900-LP-001-7000, CLASS P-3V. GRADE V SIL-BRAZE-RINGS ARE PROVIDED IN THE TAILPIECES OF PIECE 3,4 AND 5. ANY SUPPLEMENTAL FACE FED BRAZE ROD USED SHALL BE GRADE V IN ACCORDANCE WITH QQ-B-654. BRAZE BEFORE INSTALLING O-RINGS.

3. AFTER ALL BRAZING IS COMPLETE, THE TUBING ASSEMBLY SHALL BE FLUSHED IN ACCORDANCE WITH MIL-STD-419, PARA 5.4. FLUSH BEFORE INSTALLING O-RINGS.

4. THE ASSEMBLY SHALL BE HYDROSTATICALLY TESTED TO 100 PSIG AND HELD FOR 10 MINUTES WITHOUT LEAKAGE. ALL EQUIPMENT REQUIRED FOR TEST SHALL BE PROVIDED BY THE MANUFACTURER.

5. AFTER COMPLYING WITH NOTES 3 AND 4, PAINT WITH MATERIALS SPECIFIED IN PC 6 FOR SPECIAL PROCEDURE FOR RAM TENSIONER: STAINLESS STEEL AND BRONZE PARTS.

6. PRIOR TO ASSEMBLY APPLY LED-PLATE ANTISEIZE COMPOUND, PIECE 9, TO ALL THREADED SURFACES.

6.1 THE FOLLOWING ITEMS SHALL BE PROCURED FROM THE VENDOR(S) LISTED. A SUBSTITUTE ITEM SHALL NOT BE USED WITHOUT PRIOR APPROVAL BY THE NAVY.

PC 9: ANTISEIZE COMPOUND LED-PLATE.
APPROVED SOURCE OF SUPPLY:
ARMITE LABORATORIES
1560 SUPERIOR AVE, STE A4
COSTA MESA, CA 92627-3676
CODE IDENT: 84180
PART NO 250

7. STOCK SIZE IN REMARKS COLUMN OF PARTS LIST IS NOMINAL WITHOUT MANUFACTURING ALLOWANCE.

8. APPLY O-RING LUBRICANT, PC 8, TO O-RINGS PC 7 TO MATING SURFACES AND GROOVES. FOLLOW MANUFACTURER'S INSTRUCTIONS FOR APPLICATION.

8.1 PETROLEUM BASED O-RING LUBRICANTS SHALL NOT BE USED OR SUBSTITUTED FOR PC 8.

9. THE FOLLOWING ITEM(S) MAY BE PROCURED FROM THE VENDOR(S) LISTED.

9.1 PC 8: O-RING LUBRICANT (SILICONE),
APPROVED SOURCE OF SUPPLY:
PARKER HANNIFIN CORP, O-RING DIVISION
2360 PALUMBO DRIVE
LEXINGTON, KY 40509-1048
CAGE CODE: 02697
TRADE NAME: PARKER SUPER O-LUBE

10. LENGTH AND CONFIGURATION OF TUBING CAN VARY. ESTABLISH EXACT LENGTH AND CONFIGURATION AT NEXT ASSEMBLY.

VIEW A-A

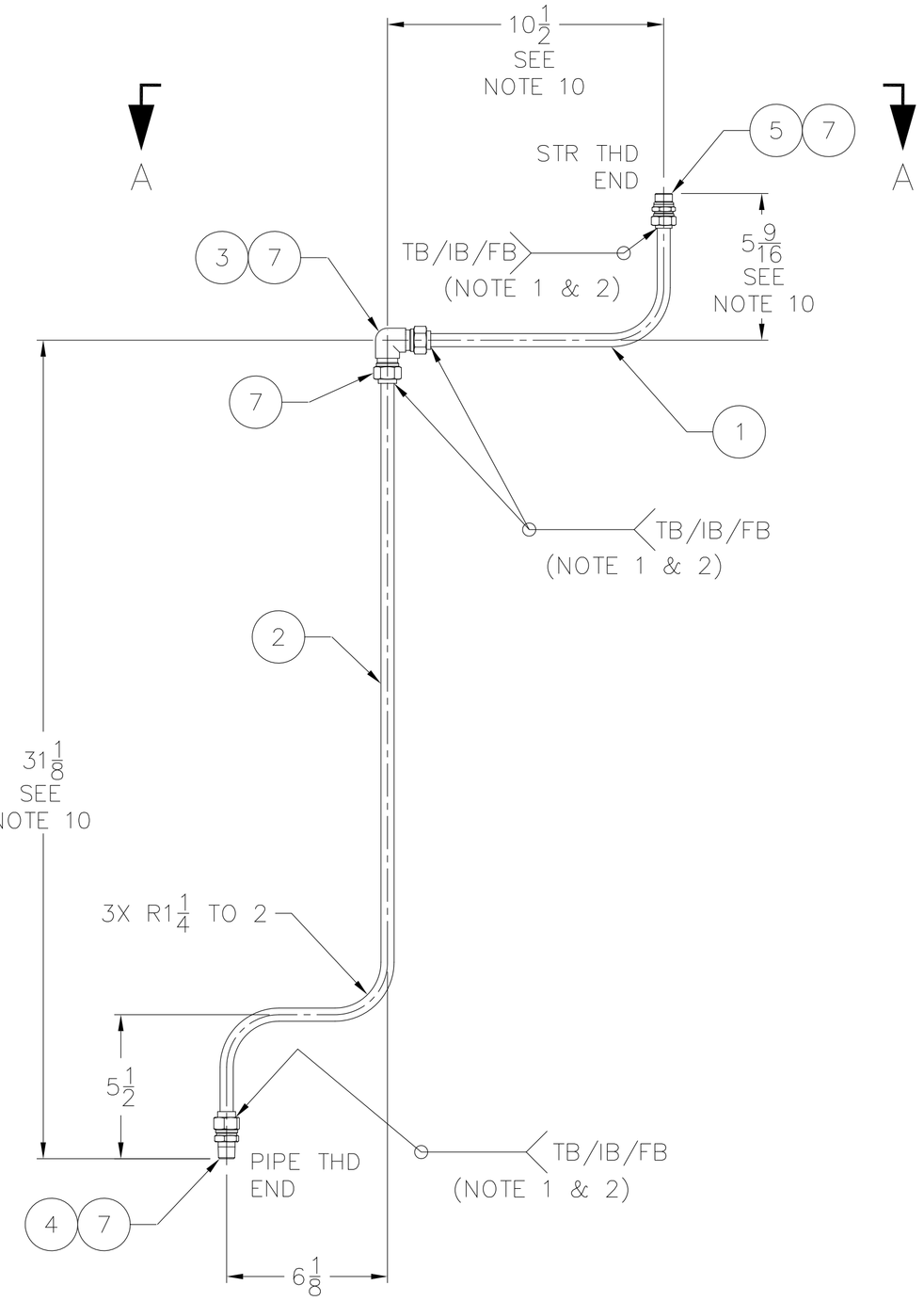

REVISIONS				
ZONE	LTR	DESCRIPTION	DATE	APPROVED

PART OR IDENTIFYING NO.	QTY REQD	CODE IDENT NO.	DRAWING OR SPECIFICATION	NOMENCLATURE OR DESCRIPTION	REMARKS
9	AR	–	MIL-PRF-907	ANTISEIZE COMPOUND	SEE NOTE 6
8	AR	02697		O-RING LUBRICANT	SEE NOTE 8 AND 9
7	4	–	SAE AMS7276	O-RING, FKM (VITON) 75 DURO, 1/2 OD TUBE	SAE AS568-015
6	AR	53711	5210545	STD PAINT PROCEDURE-UNREP	SEE NOTE 5
5	1	53711	8287596-2	TUBE TO STR THD CONN ASSY	1/2 OD TUBE X 3/4-16UNF
4	1	53711	8287586-2	TUBE TO MALE PIPE CONN ASSY	1/2 OD TUBE X 3/8-18NPT
3	1	53711	8287591-2	TUBE TO TUBE ELBOW ASSY	1/2 OD TUBE
2	1			SEAMLESS TUBE, 1/2 OD	.065 WALL X 32 3/4
1	1			SEAMLESS TUBE, 1/2 OD	.065 WALL X 12 7/8

PARTS LIST

APPLICATION	
NEXT ASSY	USED ON
8287500	8287500

MATERIAL:
PC 1 & 2: CRES
PER ASTM A269
GRADE TP316
ANNEALED

UNLESS OTHERWISE SPECIFIED:
ALL DIMENSIONS ARE IN INCHES
TOLERANCES: ANGLES± FRACTIONS± 1/16
DECIMALS .XX± .XXX±
BEND RADII
FILLETS & ROUNDS
SURFACE FINISH √
BREAK ALL SHARP EDGES
INTERPRET DRAWING IN ACCORDANCE WITH STANDARDS PRESCRIBED IN ASME Y14.100
DO NOT SCALE THIS DRAWING

PORT HUENEME DIVISION NAVAL SURFACE WARFARE CENTER 4363 MISSILE WAY PORT HUENEME, CA 93043-4307		
PREPARED	AMSEC	06-07
CHECKED		
TECH LEAD		
BR HD		
ACCEPTED BY NAVSEA	(SIGNATURE DOES NOT DENOTE APPROVAL)	
APPROVED FOR NAVSEA	(SIGN ONLY IF ENGINEERING HAS BEEN "PROVED" BY MANUFACTURE AND TEST)	

DEPARTMENT OF THE NAVY
NAVAL SEA SYSTEMS COMMAND
WASHINGTON, D.C. 20376-5160

HEAVY UNREP-NAVY STANDARD
RAM TENSIONER

LOWER BLEED TUBING ASSEMBLY

SIZE	CAGE CODE	NAVSEA DWG NO.	REV
D	53711	8287557	–

SCALE 1/4 | UNIT WT 2.0 LBS | SHEET 1 OF 1

8287557

NOTICE OF CONFIGURATION CONTROL

THIS DRAWING DEFINES AN ITEM OF UNDERWAY REPLENISHMENT (UNREP) STANDARD HARDWARE. NO REVISION TO THIS DRAWING OR THE HARDWARE REPRESENTED BY IT IS AUTHORIZED WITHOUT THE WRITTEN APPROVAL OF THE NAVAL SEA SYSTEMS COMMAND.

DISTRIBUTION STATEMENT C: DISTRIBUTION AUTHORIZED TO U.S. GOVERNMENT AGENCIES AND THEIR CONTRACTORS: OTHER REQUESTS MUST BE REFERRED TO COMNAVSEA OR THE COGNIZANT NAVSEA CODE.

WARNING: THIS DOCUMENT CONTAINS TECHNICAL DATA WHOSE EXPORT IS RESTRICTED BY THE ARMS EXPORT CONTROL ACT (TITLE 22, U.S.C. SEC. 2751 ET SEQ.) OR EXECUTIVE ORDER 12470. VIOLATIONS OF THESE EXPORT LAWS ARE SUBJECT TO SEVERE CRIMINAL PENALTIES.

DESTRUCTION NOTICE: DESTROY BY ANY METHOD THAT WILL PREVENT DISCLOSURE OF CONTENTS OR RECONSTRUCTION OF THE DOCUMENT.

NOTES:

1. INTERPRET BRAZING METHODS IN ACCORDANCE WITH ANSI/AWS A3.0 ANY ONE OF THE THREE METHODS PROVIDED MAY BE UTILIZED.

2. BRAZING PROCESS AND PROCEDURE SHALL BE IN ACCORDANCE WITH NAVSEA 0900-LP-001-7000, CLASS P-3V. GRADE V SIL-BRAZE-RINGS ARE PROVIDED IN THE TAILPIECES OF PIECE 3,4 AND 5. ANY SUPPLEMENTAL FACE FED BRAZE ROD USED SHALL BE GRADE V IN ACCORDANCE WITH QQ-B-654. BRAZE BEFORE INSTALLING O-RINGS.

3. AFTER ALL BRAZING IS COMPLETE, THE TUBING ASSEMBLY SHALL BE FLUSHED IN ACCORDANCE WITH MIL-STD-419, PARA 5.4. FLUSH BEFORE INSTALLING O-RINGS.

4. THIS ITEM SHALL BE HYDROSTATICALLY TESTED TO 3,750 PSIG AND HELD FOR 10 MINUTES WITHOUT LEAKAGE. ALL EQUIPMENT REQUIRED FOR TEST SHALL BE PROVIDED BY THE MANUFACTURER.

5. AFTER COMPLYING WITH NOTES 3 AND 4, PAINT WITH MATERIALS SPECIFIED IN PC 7 FOR SPECIAL PROCEDURE FOR RAM TENSIONER: STAINLESS STEEL AND BRONZE PARTS.

6. PRIOR TO ASSEMBLY APPLY LED-PLATE ANTISEIZE COMPOUND, PIECE 6, TO ALL THREADED SURFACES.

6.1 THE FOLLOWING ITEMS SHALL BE PROCURED FROM THE VENDOR(S) LISTED. A SUBSTITUTE ITEM SHALL NOT BE USED WITHOUT PRIOR APPROVAL BY THE NAVY.

PC 6: ANTISEIZE COMPOUND LED-PLATE.
APPROVED SOURCE OF SUPPLY:
ARMITE LABORATORIES
1560 SUPERIOR AVE, STE A4
COSTA MESA, CA 92627-3676
CODE IDENT: 84180
PART NO 250

7. STOCK SIZE IN REMARKS COLUMN OF PARTS LIST IS NOMINAL WITHOUT MANUFACTURING ALLOWANCE.

8. APPLY O-RING LUBRICANT, PC 9, TO O-RINGS PCS 8 TO MATING SURFACES AND GROOVES. FOLLOW MANUFACTURER'S INSTRUCTIONS FOR APPLICATION.

8.1 PETROLEUM BASED O-RING LUBRICANTS SHALL NOT BE USED OR SUBSTITUTED FOR PC 9.

9. THE FOLLOWING ITEM(S) MAY BE PROCURED FROM THE VENDOR(S) LISTED.

9.1 PC 9: O-RING LUBRICANT (SILICONE),
APPROVED SOURCE OF SUPPLY:
PARKER HANNIFIN CORP, O-RING DIVISION
2360 PALUMBO DRIVE
LEXINGTON, KY 40509-1048
CAGE CODE: 02697
TRADE NAME: PARKER SUPER O-LUBE

10. LENGTH AND CONFIGURATION OF TUBE, PC 1, CAN VARY. ESTABLISH EXACT LENGTH AND CONFIGURATION AT NEXT ASSEMBLY.

11. REPLACE TAILPIECE SLEEVE FROM TUBE TO STRAIGHT THREAD CONNECTOR ASSEMBLY, PC 4, WITH BLANK TAILPIECE (ALTERED), PC 10, PRIOR TO PREFORMING NOTE 2.

12. WELDING REQUIREMENTS:

12.1 FABRICATION, WELDING, STRESS RELIEF AND INSPECTION SHALL BE IN ACCORDANCE WITH NAVSEA S9074-AR-GIB-010/278 AND T9074-AS-GIB-010/271, CLASS M-2, CATEGORY C AND REQUIRE VISUAL INSPECTION ONLY.

12.2 UNLESS OTHERWISE SPECIFIED ON THIS DRAWING, ALL DIMENSIONS AND TOLERANCES REFER TO FINISHED PRODUCT.

13. DIMENSIONS PROVIDED IN REMARKS COLUMN OF PARTS LIST ARE REFERENCE ONLY UNLESS THERE IS NO DETAILED VIEW WHICH SPECIFIES REQUIRED DIMENSIONS.

14. WELDMENT MAY BE STRAIGHTENED IF REQUIRED TO MEET DIMENSIONAL REQUIREMENTS ON THE FACE OF DRAWING.

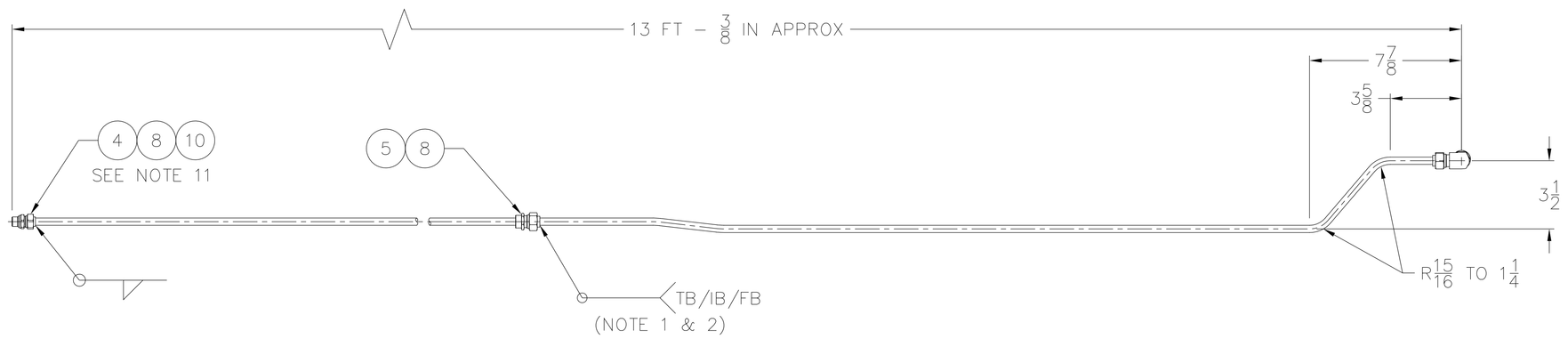

VIEW A–A

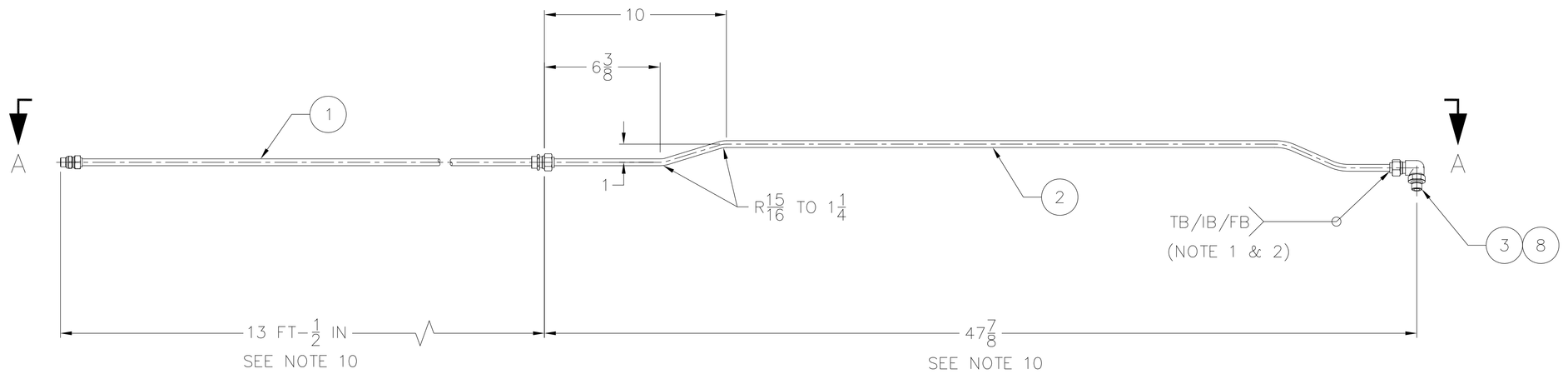

REVISIONS				
ZONE	LTR	DESCRIPTION	DATE	APPROVED

PART OR IDENTIFYING NO.	QTY REQD	CODE IDENT NO.	DRAWING OR SPECIFICATION	NOMENCLATURE OR DESCRIPTION	REMARKS
10	1	53711	8287601	BLANK TAILPIECE (ALTERED)	3/8 OD TUBE
9	AR	02697		O-RING LUBRICANT	SEE NOTE 8 AND 9
8	4	–	SAE AMS7276	O-RING, FKM (VITON) 75 DURO, 3/8 OD TUBE	SAE AS568-013
7	AR	53711	5210545	STD PAINT PROCEDURE-UNREP	SEE NOTE 5
6	AR	–	MIL-PRF-907	ANTISEIZE COMPOUND	SEE NOTE 6
5	1	53711	8287590	TUBE TO TUBE UNION	3/8 OD TUBE
4	1	53711	8287596-1	TUBE TO STR THD CONN	3/8 OD TUBE X 9/16-18UNF
3	1	53711	8287588-1	TUBE TO STR THD ELBOW	3/8 OD TUBE X 9/16-18UNF
2	1	–		SEAMLESS TUBE, 3/8 OD	.065 WALL X 48 1/4 LG
1	1	–		SEAMLESS TUBE, 3/8 OD	.065 WALL X 12 FT-11 LG

PARTS LIST

APPLICATION	
NEXT ASSY	USED ON
8287500	8287500

MATERIAL:
PC 1 AND 2: CRES PER ASTM A269 GRADE TP316 ANNEALED

UNLESS OTHERWISE SPECIFIED:
ALL DIMENSIONS ARE IN INCHES
TOLERANCES: ANGLES± FRACTIONS± 1/16
DECIMALS
.XX±
.XXX±
BEND RADII
FILLETS & ROUNDS
SURFACE FINISH ✓
BREAK ALL SHARP EDGES
INTERPRET DRAWING IN ACCORDANCE WITH STANDARDS PRESCRIBED IN ASME Y14.100
DO NOT SCALE THIS DRAWING

PORT HUENEME DIVISION NAVAL SURFACE WARFARE CENTER 4363 MISSILE WAY PORT HUENEME, CA 93043-4307		
PREPARED	AMSEC	06-07
CHECKED		
TECH LEAD		
BR HD		
ACCEPTED BY NAVSEA	(SIGNATURE DOES NOT DENOTE APPROVAL)	
APPROVED FOR NAVSEA	(SIGN ONLY IF ENGINEERING HAS BEEN "PROVED" BY MANUFACTURE AND TEST)	

DEPARTMENT OF THE NAVY
NAVAL SEA SYSTEMS COMMAND
WASHINGTON,D.C. 20376-5160

HEAVY UNREP-NAVY STANDARD
RAM TENSIONER

UPPER BLEED TUBING ASSEMBLY

SIZE	CAGE CODE	NAVSEA DWG. NO.	REV
F	53711	8287558	–

SCALE 1/4 | UNIT WT 4.0 LBS | SHEET 1 OF 1

8287558

NOTICE OF CONFIGURATION CONTROL

THIS DRAWING DEFINES AN ITEM OF UNDERWAY REPLENISHMENT (UNREP) STANDARD HARDWARE. NO REVISION TO THIS DRAWING OR THE HARDWARE REPRESENTED BY IT IS AUTHORIZED WITHOUT THE WRITTEN APPROVAL OF THE NAVAL SEA SYSTEMS COMMAND.

DISTRIBUTION STATEMENT C: DISTRIBUTION AUTHORIZED TO U.S. GOVERNMENT AGENCIES AND THEIR CONTRACTORS: OTHER REQUESTS MUST BE REFERRED TO COMNAVSEA OR THE COGNIZANT NAVSEA CODE.

WARNING: THIS DOCUMENT CONTAINS TECHNICAL DATA WHOSE EXPORT IS RESTRICTED BY THE ARMS EXPORT CONTROL ACT (TITLE 22, U.S.C. SEC. 2751 ET SEQ.) OR EXECUTIVE ORDER 12470. VIOLATIONS OF THESE EXPORT LAWS ARE SUBJECT TO SEVERE CRIMINAL PENALTIES.

DESTRUCTION NOTICE: DESTROY BY ANY METHOD THAT WILL PREVENT DISCLOSURE OF CONTENTS OR RECONSTRUCTION OF THE DOCUMENT.

NOTES:

1. PAINT ALL SURFACES, EXCEPT THOSE NOTED "DO NOT PAINT" WITH PROCEDURES AND MATERIALS SPECIFIED IN PC 1 USING SPECIAL PROCEDURE FOR RAM TENSIONERS.

REVISIONS				
ZONE	LTR	DESCRIPTION	DATE	APPROVED

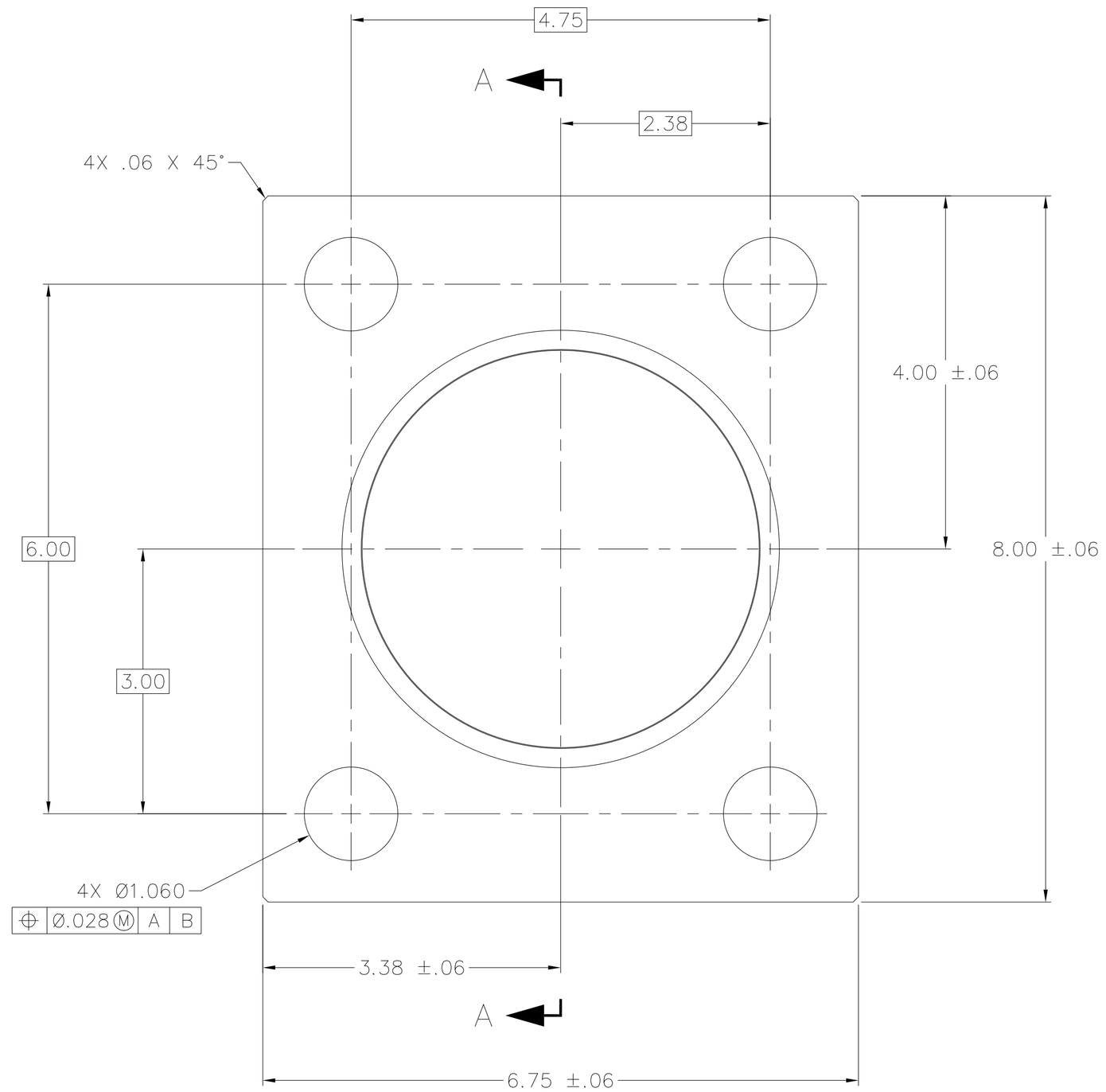

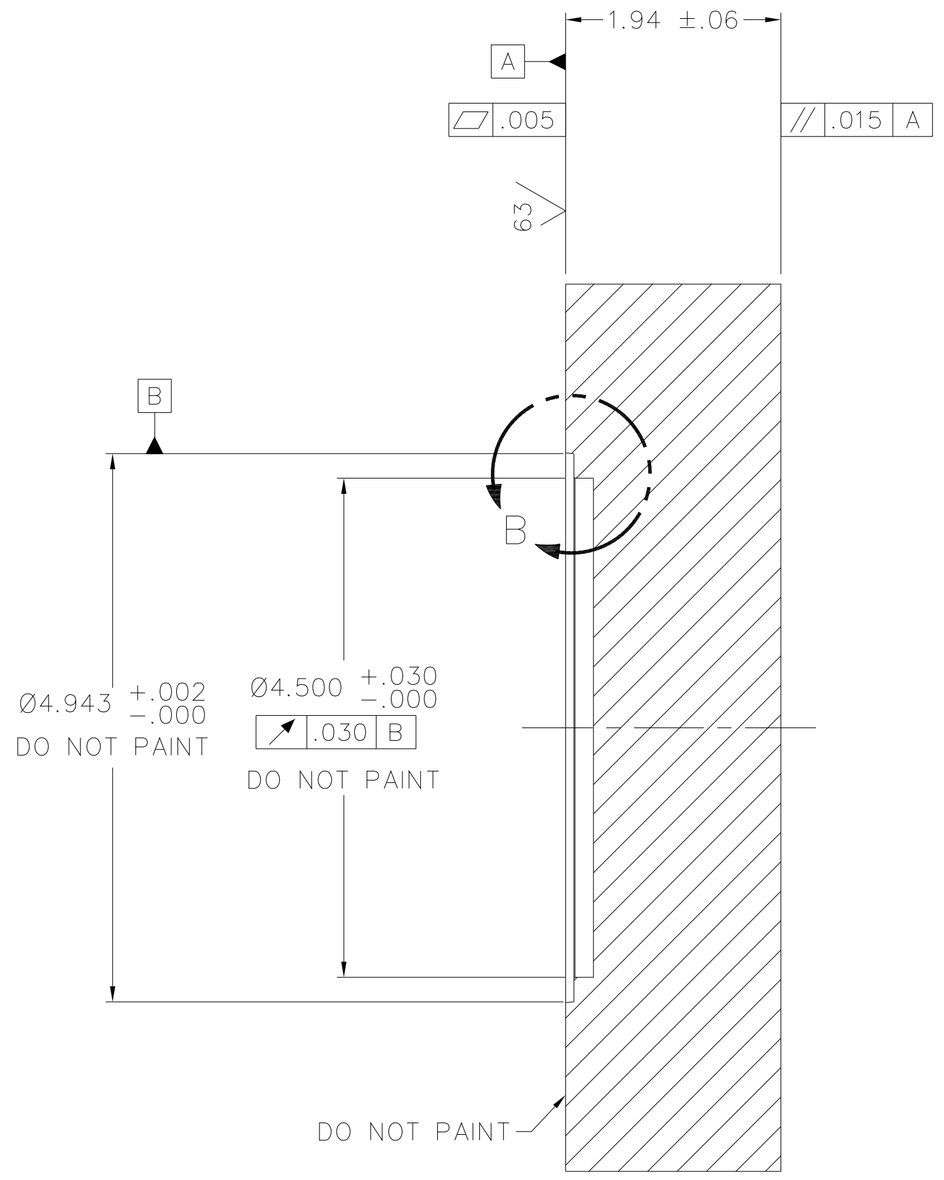

SECTION A–A

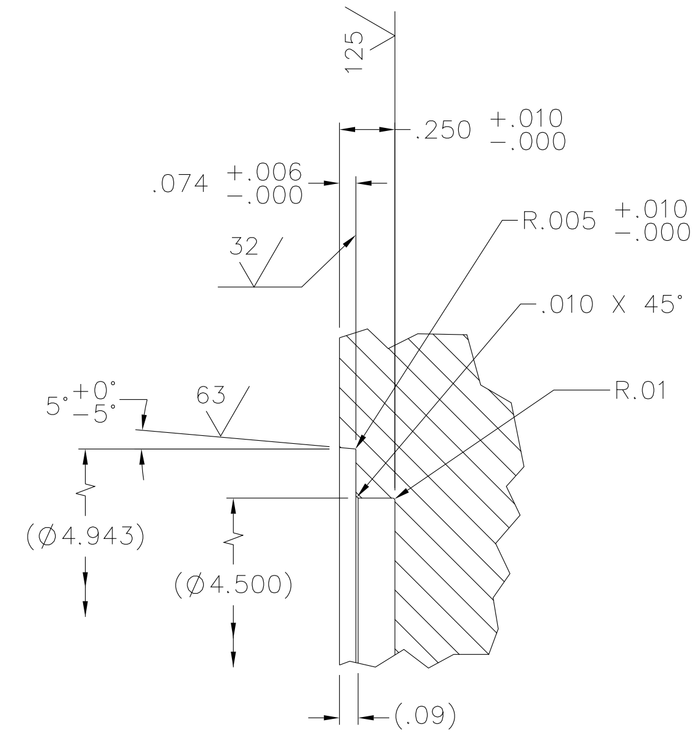

DETAIL B
SCALE: 2/1

8287559

PART OR IDENTIFYING NO.	QTY REQD	CODE IDENT NO.	DRAWING OR SPECIFICATION	NOMENCLATURE OR DESCRIPTION	REMARKS
1	AR	53711	5210545	STD PAINT PROCEDURE–UNREP	SEE NOTE 1

PARTS LIST

NOTICE OF CONFIGURATION CONTROL

THIS DRAWING DEFINES AN ITEM OF UNDERWAY REPLENISHMENT (UNREP) STANDARD HARDWARE. NO REVISION TO THIS DRAWING OR THE HARDWARE REPRESENTED BY IT IS AUTHORIZED WITHOUT THE WRITTEN APPROVAL OF THE NAVAL SEA SYSTEMS COMMAND.

DISTRIBUTION STATEMENT C: DISTRIBUTION AUTHORIZED TO U.S. GOVERNMENT AGENCIES AND THEIR CONTRACTORS; OTHER REQUESTS MUST BE REFERRED TO COMNAVSEA OR THE COGNIZANT NAVSEA CODE.

WARNING: THIS DOCUMENT CONTAINS TECHNICAL DATA WHOSE EXPORT IS RESTRICTED BY THE ARMS EXPORT CONTROL ACT (TITLE 22, U.S.C. SEC. 2751 ET SEQ.) OR EXECUTIVE ORDER 12470. VIOLATIONS OF THESE EXPORT LAWS ARE SUBJECT TO SEVERE CRIMINAL PENALTIES.

DESTRUCTION NOTICE: DESTROY BY ANY METHOD THAT WILL PREVENT DISCLOSURE OF CONTENTS OR RECONSTRUCTION OF THE DOCUMENT.

APPLICATION	
NEXT ASSY	USED ON
8287501	8287500

MATERIAL:
CARBON STEEL
ASTM A516
GRADE 70

UNLESS OTHERWISE SPECIFIED:
ALL DIMENSIONS ARE IN INCHES
TOLERANCES: ANGLES± .5°
FRACTIONS±
DECIMALS
.XX± .02
.XXX± .005
BEND RADII
FILLETS & ROUNDS
250/
SURFACE FINISH √
BREAK ALL SHARP EDGES
INTERPRET DRAWING IN ACCORDANCE WITH STANDARDS PRESCRIBED IN ASME Y14.100
DO NOT SCALE THIS DRAWING

PORT HUENEME DIVISION NAVAL SURFACE WARFARE CENTER 4363 MISSILE WAY PORT HUENEME, CA 93043–4307		
PREPARED	AMSEC	06–07
CHECKED		
TECH LEAD		
BR HD		
ACCEPTED BY NAVSEA	(SIGNATURE DOES NOT DENOTE APPROVAL)	
APPROVED FOR NAVSEA	(SIGN ONLY IF ENGINEERING HAS BEEN "PROVED" BY MANUFACTURE AND TEST)	

DEPARTMENT OF THE NAVY
NAVAL SEA SYSTEMS COMMAND
WASHINGTON, D.C. 20376–5160

HEAVY UNREP–NAVY STANDARD
RAM TENSIONER

FLOW CONTROL VALVE FLANGE

SIZE	CAGE CODE	NAVSEA DWG NO.	REV
D	53711	8287559	—

SCALE 1/1 | UNIT WT 26.3 LBS | SHEET 1 OF 1

NSWC 4120/8 (REV 03–92)

NOTES:

1. PAINT ALL SURFACES, EXCEPT THOSE NOTED "DO NOT PAINT" FOR PROCEDURES AND MATERIALS SPECIFIED IN PC 1 USING SPECIAL PROCEDURE FOR RAM TENSIONERS.

REVISIONS				
ZONE	LTR	DESCRIPTION	DATE	APPROVED

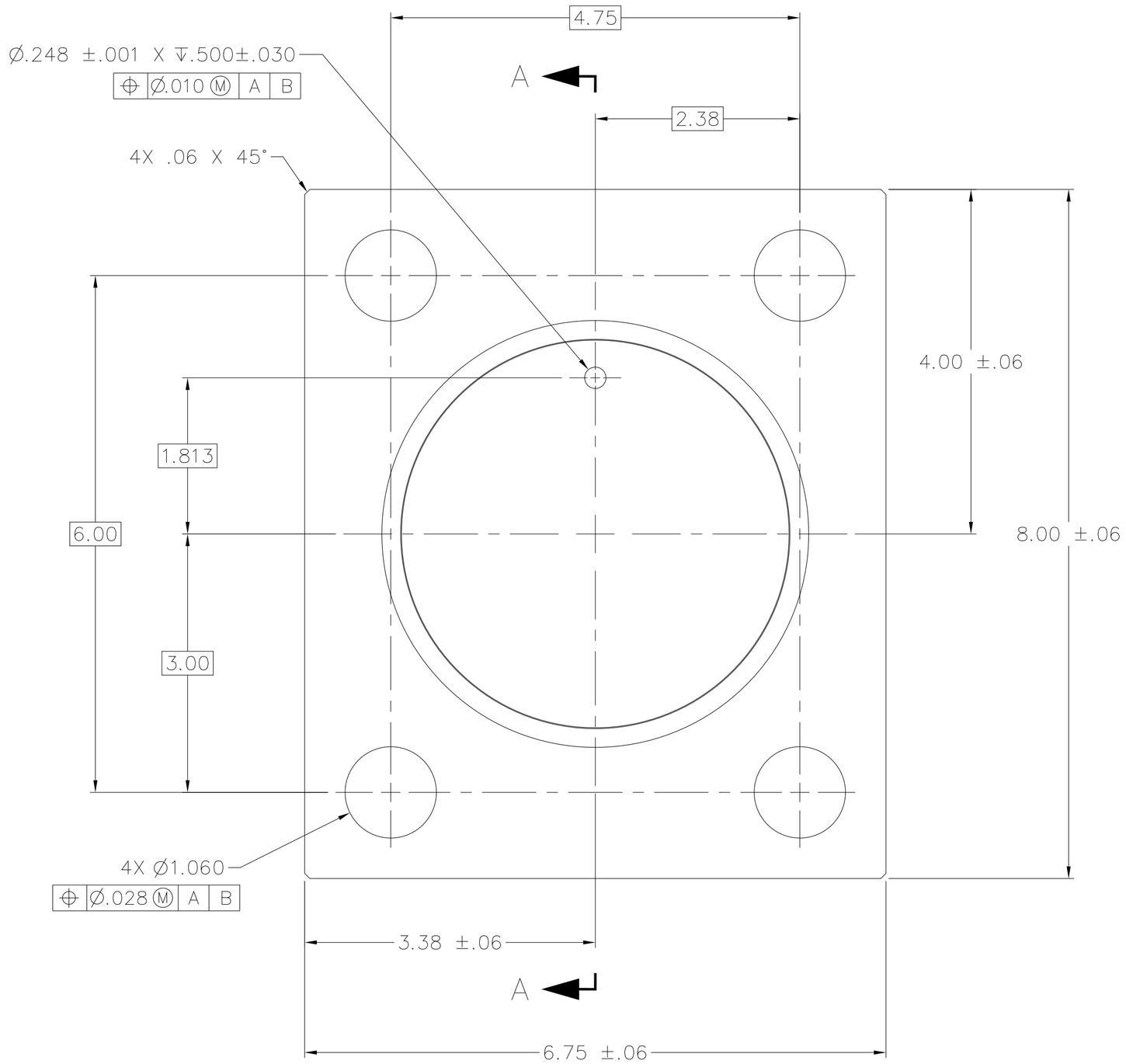

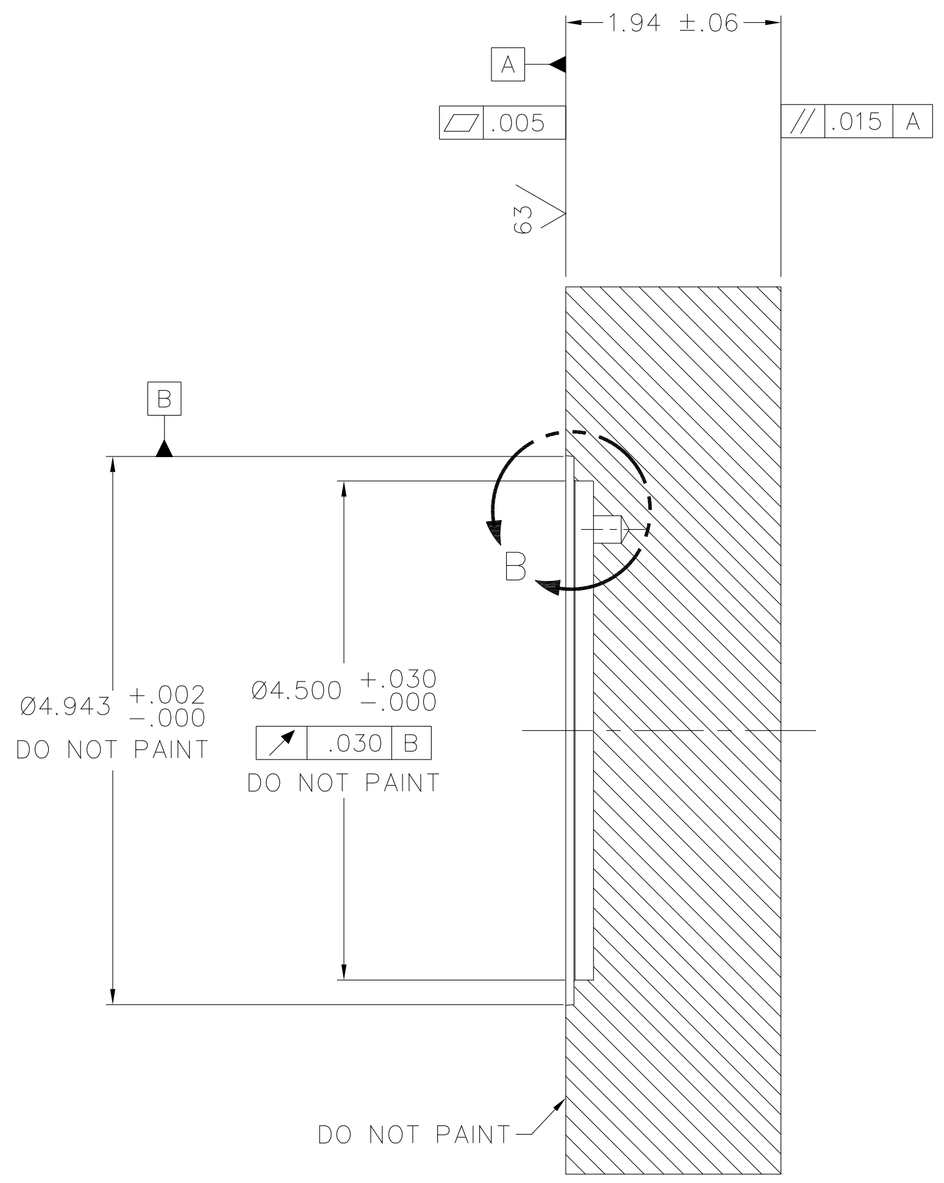

SECTION A–A

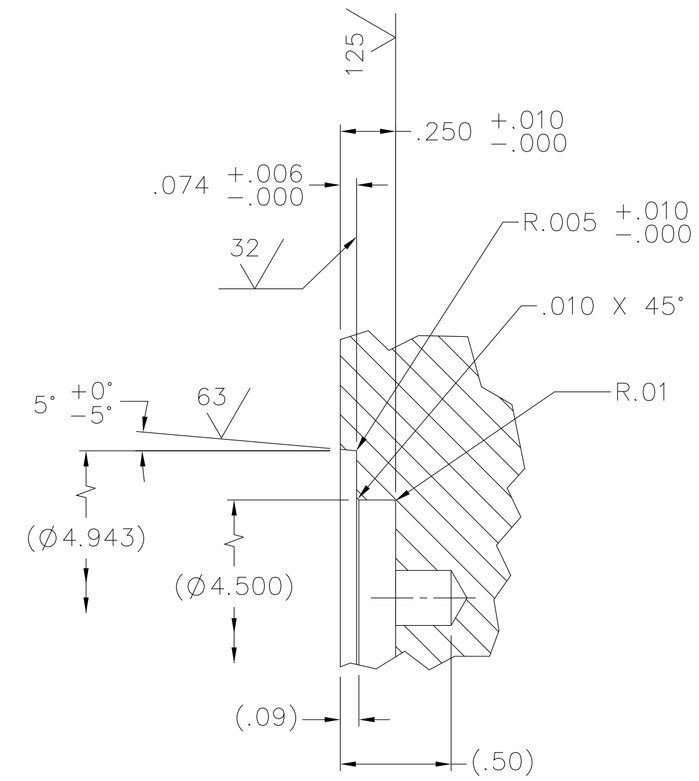

DETAIL B
SCALE: 2/1

8287560

PART OR IDENTIFYING NO.	QTY REQD	CODE IDENT NO.	DRAWING OR SPECIFICATION	NOMENCLATURE OR DESCRIPTION	REMARKS
1	AR	53711	5210545	STD PAINT PROCEDURE–UNREP	SEE NOTE 1

PARTS LIST

NOTICE OF CONFIGURATION CONTROL

THIS DRAWING DEFINES AN ITEM OF UNDERWAY REPLENISHMENT (UNREP) STANDARD HARDWARE. NO REVISION TO THIS DRAWING OR THE HARDWARE REPRESENTED BY IT IS AUTHORIZED WITHOUT THE WRITTEN APPROVAL OF THE NAVAL SEA SYSTEMS COMMAND.

DISTRIBUTION STATEMENT C: DISTRIBUTION AUTHORIZED TO U.S. GOVERNMENT AGENCIES AND THEIR CONTRACTORS; OTHER REQUESTS MUST BE REFERRED TO COMNAVSEA OR THE COGNIZANT NAVSEA CODE.

WARNING: THIS DOCUMENT CONTAINS TECHNICAL DATA WHOSE EXPORT IS RESTRICTED BY THE ARMS EXPORT CONTROL ACT (TITLE 22, U.S.C. SEC. 2751 ET SEQ.) OR EXECUTIVE ORDER 12470. VIOLATIONS OF THESE EXPORT LAWS ARE SUBJECT TO SEVERE CRIMINAL PENALTIES.

DESTRUCTION NOTICE: DESTROY BY ANY METHOD THAT WILL PREVENT DISCLOSURE OF CONTENTS OR RECONSTRUCTION OF THE DOCUMENT.

APPLICATION	
NEXT ASSY	USED ON
8287501	8287500

MATERIAL:
CARBON STEEL
ASTM A516
GRADE 70

UNLESS OTHERWISE SPECIFIED:
ALL DIMENSIONS ARE IN INCHES
TOLERANCES: ANGLES± .5°
FRACTIONS±
DECIMALS
.XX± .02
.XXX± .005
BEND RADII
FILLETS & ROUNDS
SURFACE FINISH 250/
BREAK ALL SHARP EDGES
INTERPRET DRAWING IN ACCORDANCE WITH STANDARDS PRESCRIBED IN ASME Y14.100
DO NOT SCALE THIS DRAWING

PORT HUENEME DIVISION
NAVAL SURFACE WARFARE CENTER
4363 MISSILE WAY
PORT HUENEME, CA 93043–4307

PREPARED	AMSEC	06–07
CHECKED		
TECH LEAD		
BR HD		
ACCEPTED BY NAVSEA	(SIGNATURE DOES NOT DENOTE APPROVAL)	
APPROVED FOR NAVSEA	(SIGN ONLY IF ENGINEERING HAS BEEN "PROVED" BY MANUFACTURE AND TEST)	

DEPARTMENT OF THE NAVY
NAVAL SEA SYSTEMS COMMAND
WASHINGTON, D.C. 20376–5160

HEAVY UNREP–NAVY STANDARD
RAM TENSIONER

PORTED FLOW CONTROL VALVE FLANGE

SIZE	CAGE CODE	NAVSEA DWG NO.	REV
D	53711	8287560	–

SCALE 1/1 | UNIT WT 26.3 | SHEET 1 OF 1

NSWC 4120/8 (REV 03–92)

NOTES:

1. AFTER FABRICATION, HEAT TREAT IN ACCORDANCE WITH SAE–AMS–H–6875, CLASS A TO RHN C45–50.

2. INDICATED FINISH SHALL BE RIGHT HAND LAY, .015 TO .020 WIDE, CONCENTRIC TO OUTSIDE DIAMETER OF PART.

REVISIONS				
ZONE	LTR	DESCRIPTION	DATE	APPROVED

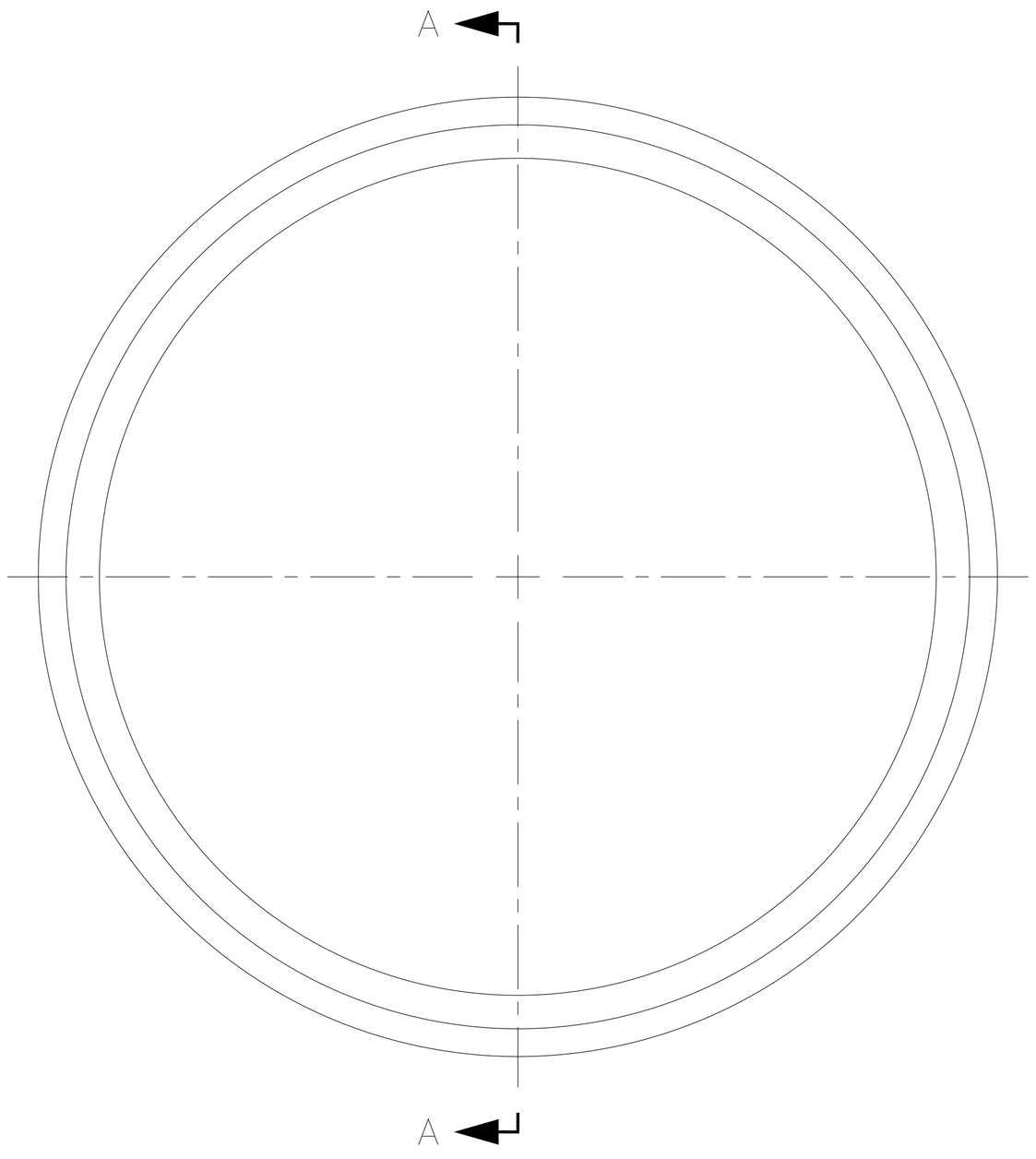

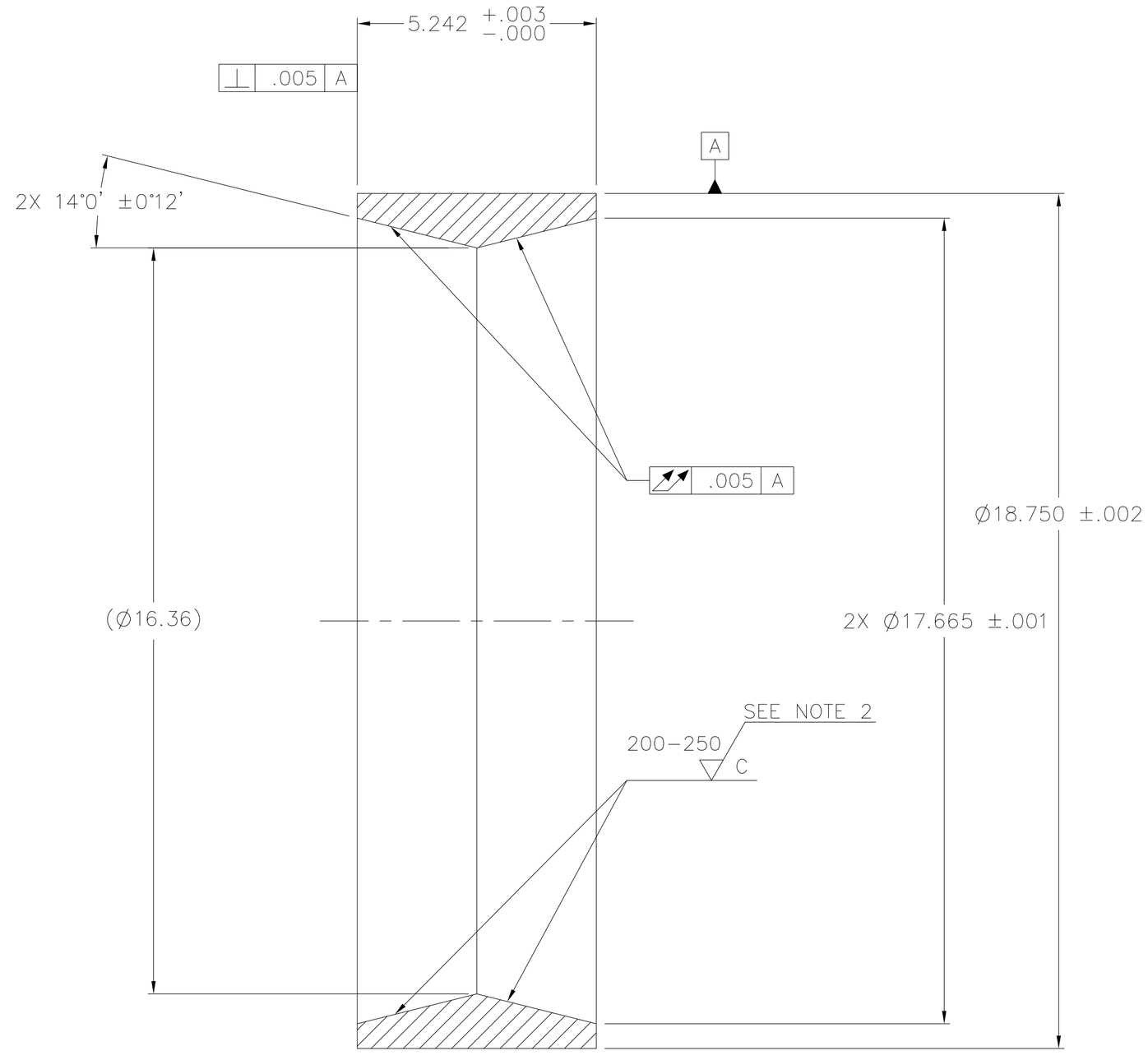

SECTION A–A

PART OR IDENTIFYING NO.	QTY REQD	CODE IDENT NO.	DRAWING OR SPECIFICATION	NOMENCLATURE OR DESCRIPTION	REMARKS

PARTS LIST

NOTICE OF CONFIGURATION CONTROL

THIS DRAWING DEFINES AN ITEM OF UNDERWAY REPLENISHMENT (UNREP) STANDARD HARDWARE. NO REVISION TO THIS DRAWING OR THE HARDWARE REPRESENTED BY IT IS AUTHORIZED WITHOUT THE WRITTEN APPROVAL OF THE NAVAL SEA SYSTEMS COMMAND.

DISTRIBUTION STATEMENT C: DISTRIBUTION AUTHORIZED TO U.S. GOVERNMENT AGENCIES AND THEIR CONTRACTORS; OTHER REQUESTS MUST BE REFERRED TO COMNAVSEA OR THE COGNIZANT NAVSEA CODE.

WARNING: THIS DOCUMENT CONTAINS TECHNICAL DATA WHOSE EXPORT IS RESTRICTED BY THE ARMS EXPORT CONTROL ACT (TITLE 22, U.S.C. SEC. 2751 ET SEQ.) OR EXECUTIVE ORDER 12470. VIOLATIONS OF THESE EXPORT LAWS ARE SUBJECT TO SEVERE CRIMINAL PENALTIES.

DESTRUCTION NOTICE: DESTROY BY ANY METHOD THAT WILL PREVENT DISCLOSURE OF CONTENTS OR RECONSTRUCTION OF THE DOCUMENT.

APPLICATION	
NEXT ASSY	USED ON
8287501	8287500

MATERIAL:
STEEL
ASTM A322
GRADE 4150
SEE NOTE 1

UNLESS OTHERWISE SPECIFIED:
ALL DIMENSIONS ARE IN INCHES
TOLERANCES: ANGLES± .5°
FRACTIONS±
DECIMALS
.XX±
.XXX±
BEND RADII
FILLETS & ROUNDS .250/
SURFACE FINISH √
BREAK ALL SHARP EDGES
INTERPRET DRAWING IN ACCORDANCE WITH STANDARDS PRESCRIBED IN ASME Y14.100
DO NOT SCALE THIS DRAWING

PORT HUENEME DIVISION
NAVAL SURFACE WARFARE CENTER
4363 MISSILE WAY
PORT HUENEME, CA 93043–4307

PREPARED	AMSEC	06–07
CHECKED		
TECH LEAD		
BR HD		
ACCEPTED BY NAVSEA	(SIGNATURE DOES NOT DENOTE APPROVAL)	
APPROVED FOR NAVSEA	(SIGN ONLY IF ENGINEERING HAS BEEN "PROVED" BY MANUFACTURE AND TEST)	

DEPARTMENT OF THE NAVY
NAVAL SEA SYSTEMS COMMAND
WASHINGTON, D.C. 20376–5160

HEAVY UNREP–NAVY STANDARD
RAM TENSIONER

OUTER RAM SPRING

SIZE	CAGE CODE	NAVSEA DWG NO.	REV
D	53711	8287561	–

SCALE 1/2 | UNIT WT 72.5 LBS | SHEET 1 OF 1

8287561

NSWC 4120/8 (REV 03–92)

NOTES:

1. AFTER FABRICATION, HEAT TREAT IN ACCORDANCE WITH SAE–AMS–H–6875, CLASS A TO RHN C45–50.

2. INDICATED FINISH SHALL BE LEFT HAND LAY, .015 TO .020 WIDE, CONCENTRIC TO INSIDE DIAMETER OF PART.

REVISIONS

ZONE	LTR	DESCRIPTION	DATE	APPROVED

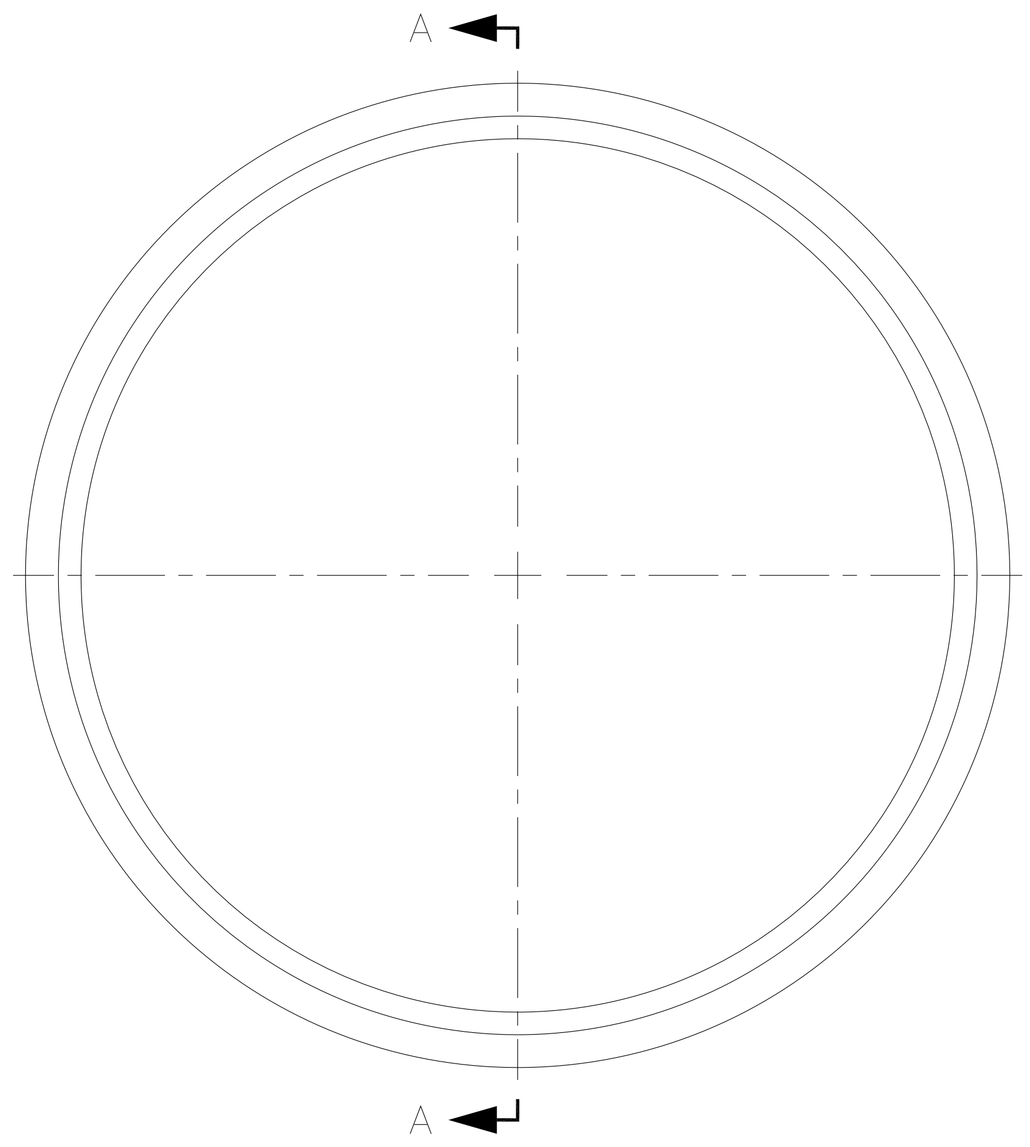

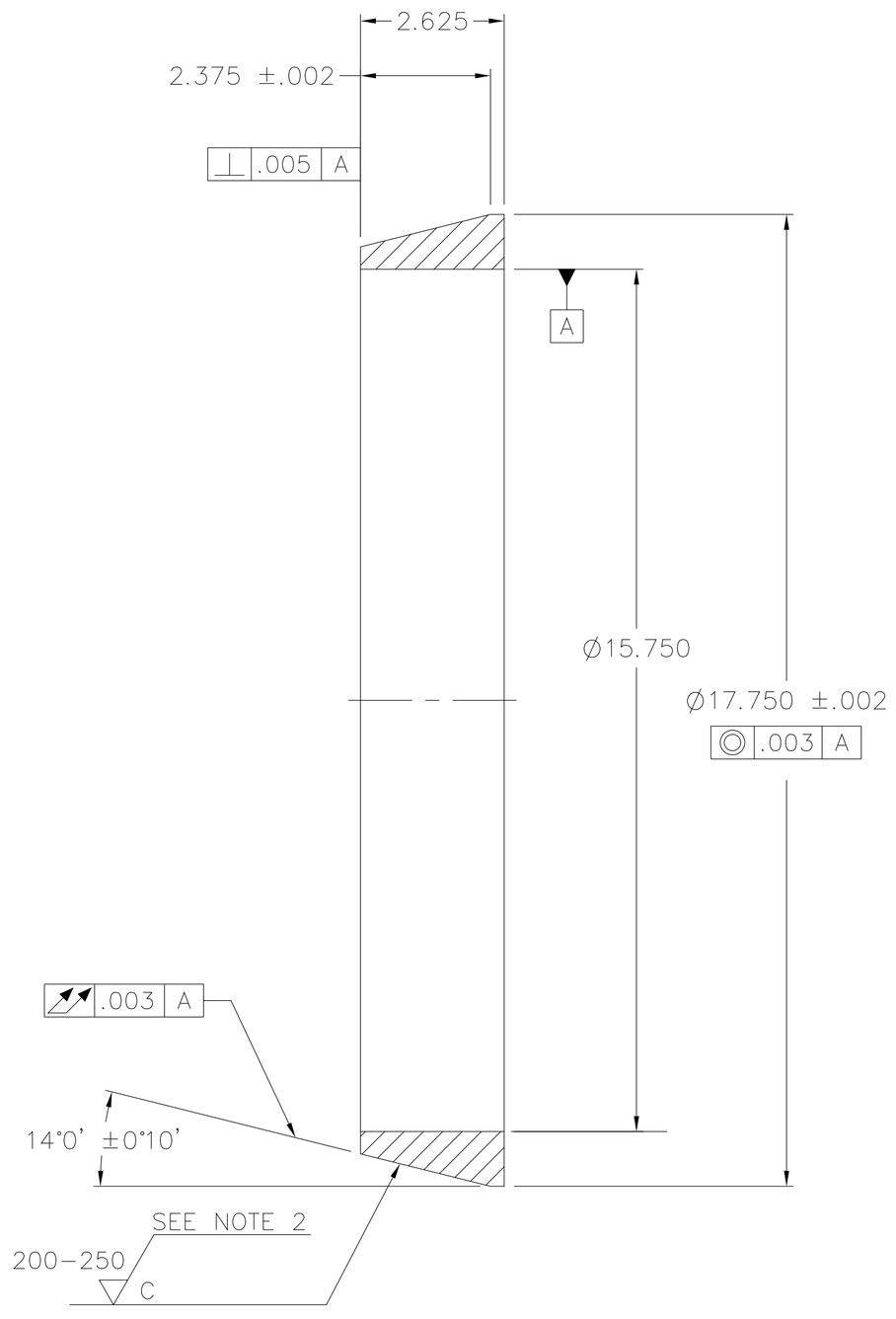

SECTION A–A

PART OR IDENTIFYING NO.	QTY REQD	CODE IDENT NO.	DRAWING OR SPECIFICATION	NOMENCLATURE OR DESCRIPTION	REMARKS

PARTS LIST

NOTICE OF CONFIGURATION CONTROL

THIS DRAWING DEFINES AN ITEM OF UNDERWAY REPLENISHMENT (UNREP) STANDARD HARDWARE. NO REVISION TO THIS DRAWING OR THE HARDWARE REPRESENTED BY IT IS AUTHORIZED WITHOUT THE WRITTEN APPROVAL OF THE NAVAL SEA SYSTEMS COMMAND.

DISTRIBUTION STATEMENT C: DISTRIBUTION AUTHORIZED TO U.S. GOVERNMENT AGENCIES AND THEIR CONTRACTORS; OTHER REQUESTS MUST BE REFERRED TO COMNAVSEA OR THE COGNIZANT NAVSEA CODE.

WARNING: THIS DOCUMENT CONTAINS TECHNICAL DATA WHOSE EXPORT IS RESTRICTED BY THE ARMS EXPORT CONTROL ACT (TITLE 22, U.S.C. SEC. 2751 ET SEQ.) OR EXECUTIVE ORDER 12470. VIOLATIONS OF THESE EXPORT LAWS ARE SUBJECT TO SEVERE CRIMINAL PENALTIES.

DESTRUCTION NOTICE: DESTROY BY ANY METHOD THAT WILL PREVENT DISCLOSURE OF CONTENTS OR RECONSTRUCTION OF THE DOCUMENT.

APPLICATION	
NEXT ASSY	USED ON
8287501	8287500

MATERIAL:

STEEL
ASTM A322
GRADE 4150
SEE NOTE 1

UNLESS OTHERWISE SPECIFIED:
ALL DIMENSIONS ARE IN INCHES
TOLERANCES: ANGLES±
FRACTIONS±
DECIMALS
.XX±
.XXX±
BEND RADII
FILLETS & ROUNDS
250/
SURFACE FINISH
BREAK ALL SHARP EDGES

INTERPRET DRAWING IN ACCORDANCE WITH STANDARDS PRESCRIBED IN ASME Y14.100

DO NOT SCALE THIS DRAWING

PORT HUENEME DIVISION
NAVAL SURFACE WARFARE CENTER
4363 MISSILE WAY
PORT HUENEME, CA 93043–4307

PREPARED	AMSEC	06–07
CHECKED		
TECH LEAD		
BR HD		
ACCEPTED BY NAVSEA	(SIGNATURE DOES NOT DENOTE APPROVAL)	
APPROVED FOR NAVSEA	(SIGN ONLY IF ENGINEERING HAS BEEN "PROVED" BY MANUFACTURE AND TEST)	

DEPARTMENT OF THE NAVY
NAVAL SEA SYSTEMS COMMAND
WASHINGTON, D.C. 20376–5160

HEAVY UNREP–NAVY STANDARD
RAM TENSIONER

INNER RAM SPRING

SIZE	CAGE CODE	NAVSEA DWG NO.	REV
D	53711	8287562	–

SCALE 1/2 | UNIT WT 28.4 LBS | SHEET 1 OF 1

8287562

NSWC 4120/8 (REV 03–92)

REVISIONS				
ZONE	LTR	DESCRIPTION	DATE	APPROVED

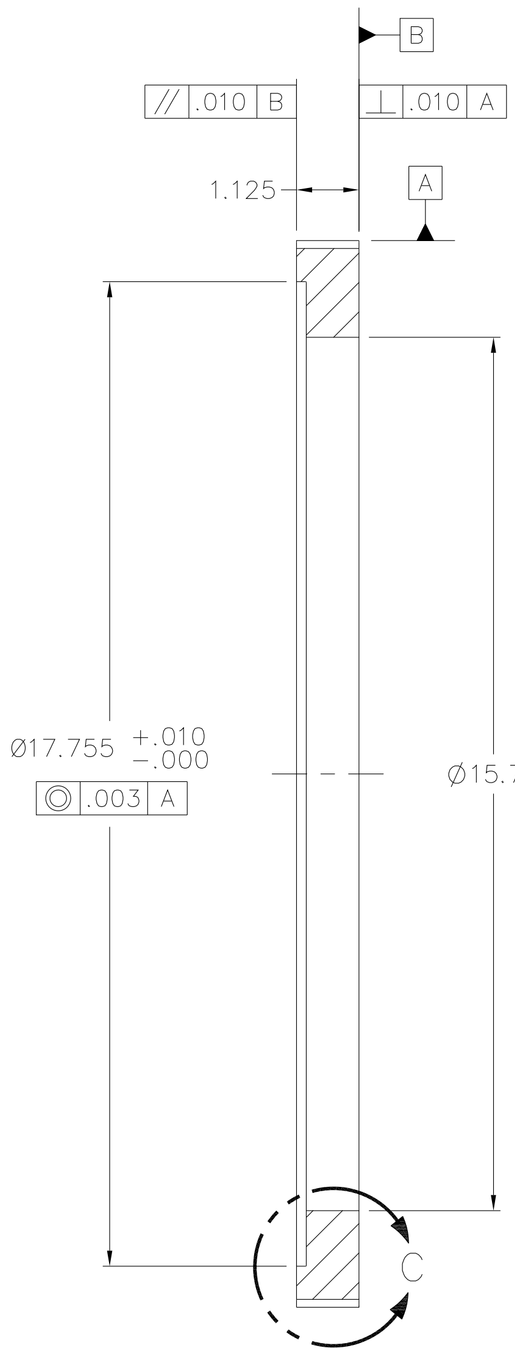

SECTION A–A

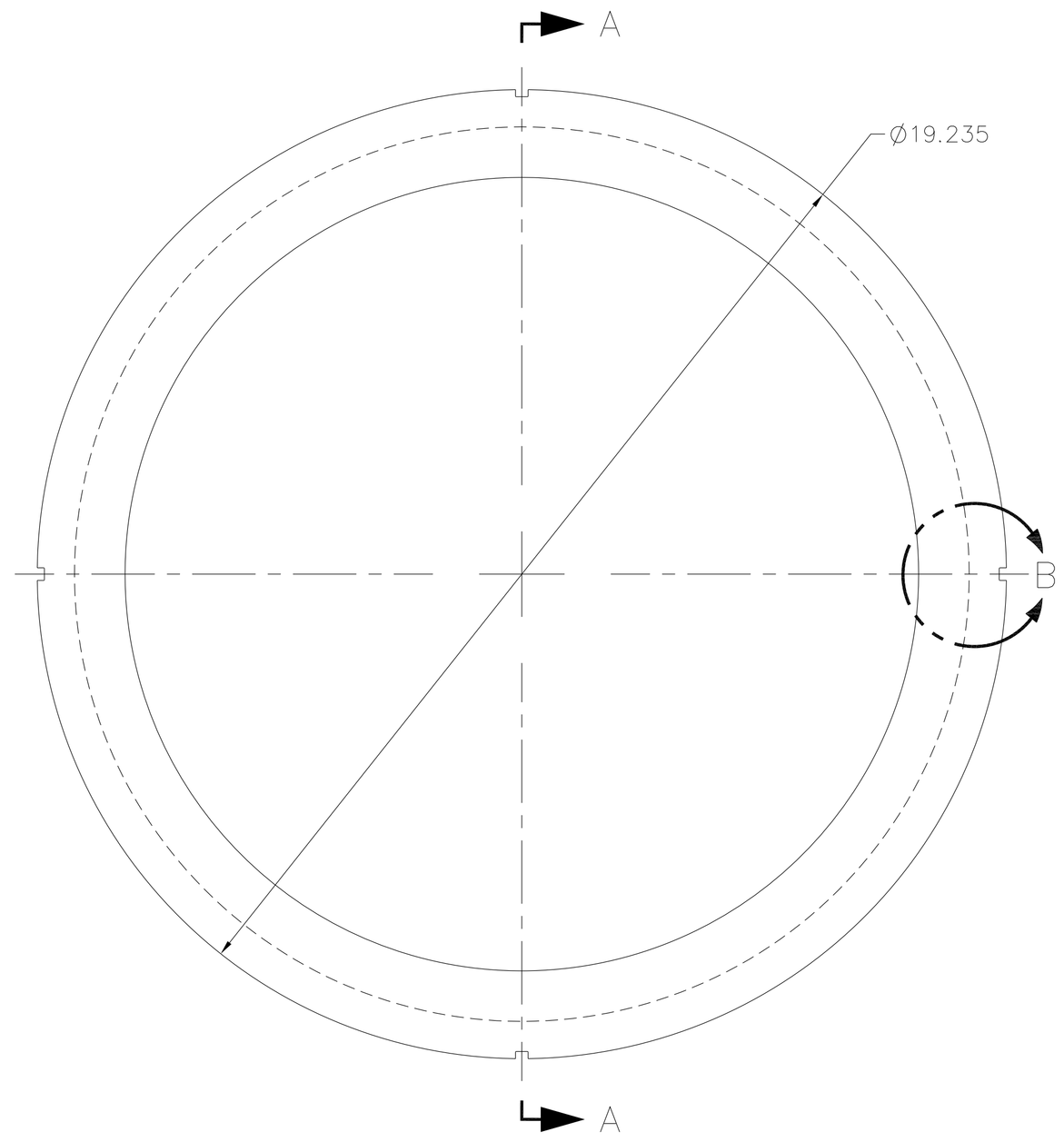

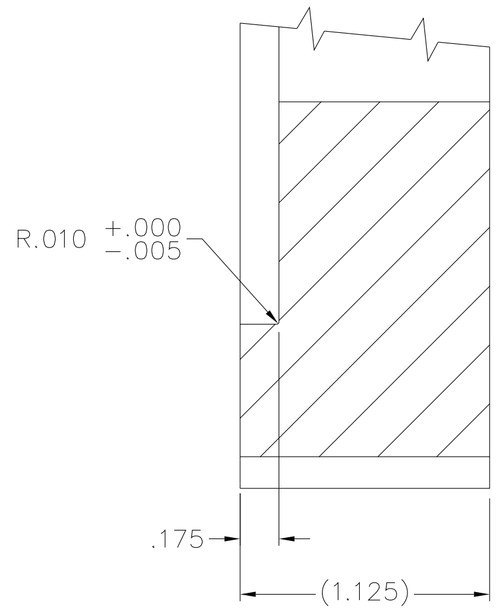

DETAIL C
SCALE: 2/1

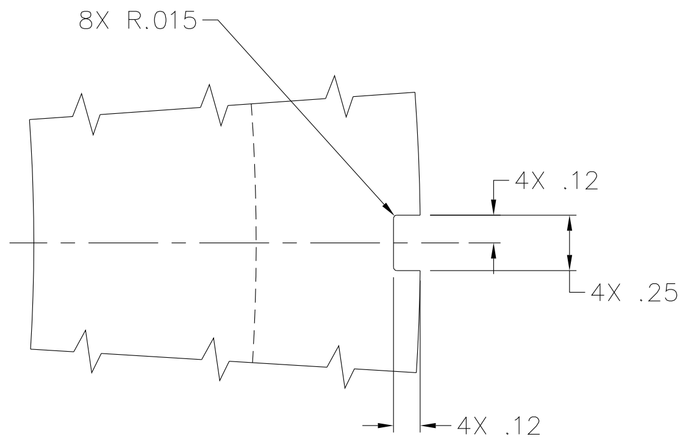

DETAIL B
SCALE: 2/1

NOTICE OF CONFIGURATION CONTROL

THIS DRAWING DEFINES AN ITEM OF UNDERWAY REPLENISHMENT (UNREP) STANDARD HARDWARE. NO REVISION TO THIS DRAWING OR THE HARDWARE REPRESENTED BY IT IS AUTHORIZED WITHOUT THE WRITTEN APPROVAL OF THE NAVAL SEA SYSTEMS COMMAND.

DISTRIBUTION STATEMENT C: DISTRIBUTION AUTHORIZED TO U.S. GOVERNMENT AGENCIES AND THEIR CONTRACTORS; OTHER REQUESTS MUST BE REFERRED TO COMNAVSEA OR THE COGNIZANT NAVSEA CODE.

WARNING: THIS DOCUMENT CONTAINS TECHNICAL DATA WHOSE EXPORT IS RESTRICTED BY THE ARMS EXPORT CONTROL ACT (TITLE 22, U.S.C. SEC. 2751 ET SEQ.) OR EXECUTIVE ORDER 12470. VIOLATIONS OF THESE EXPORT LAWS ARE SUBJECT TO SEVERE CRIMINAL PENALTIES.

DESTRUCTION NOTICE: DESTROY BY ANY METHOD THAT WILL PREVENT DISCLOSURE OF CONTENTS OR RECONSTRUCTION OF THE DOCUMENT.

APPLICATION	
NEXT ASSY	USED ON
8287501	8287500

MATERIAL:

STEEL
PER ASTM A36
OR
LOW ALLOY HIGH
STRENGTH STEEL
PER ASTM A572
OR ASTM A588
GRADE B

UNLESS OTHERWISE SPECIFIED:
ALL DIMENSIONS ARE IN INCHES
TOLERANCES: ANGLES±
FRACTIONS±
DECIMALS
.XX± .02
.XXX± .005
BEND RADII
FILLETS & ROUNDS
250/
SURFACE FINISH √
BREAK ALL SHARP EDGES

INTERPRET DRAWING IN ACCORDANCE WITH STANDARDS PRESCRIBED IN ASME Y14.100

DO NOT SCALE THIS DRAWING

PART OR IDENTIFYING NO.	QTY REQD	CODE IDENT NO.	DRAWING OR SPECIFICATION	NOMENCLATURE OR DESCRIPTION	REMARKS

PARTS LIST

PORT HUENEME DIVISION
NAVAL SURFACE WARFARE CENTER
4363 MISSILE WAY
PORT HUENEME, CA 93043–4307

PREPARED	AMSEC	06–07
CHECKED		
TECH LEAD		
BR HD		
ACCEPTED BY NAVSEA	(SIGNATURE DOES NOT DENOTE APPROVAL)	
APPROVED FOR NAVSEA	(SIGN ONLY IF ENGINEERING HAS BEEN "PROVED" BY MANUFACTURE AND TEST)	

DEPARTMENT OF THE NAVY
NAVAL SEA SYSTEMS COMMAND
WASHINGTON, D.C. 20376–5160

HEAVY UNREP–NAVY STANDARD
RAM TENSIONER

LOWER RAM SPRING RING

SIZE	CAGE CODE	NAVSEA DWG NO.	REV
D	53711	8287563	—

SCALE 1/2 | UNIT WT 25.8 LBS | SHEET 1 OF 1

8287563

NSWC 4120/8 (REV 03–92)

REVISIONS				
ZONE	LTR	DESCRIPTION	DATE	APPROVED

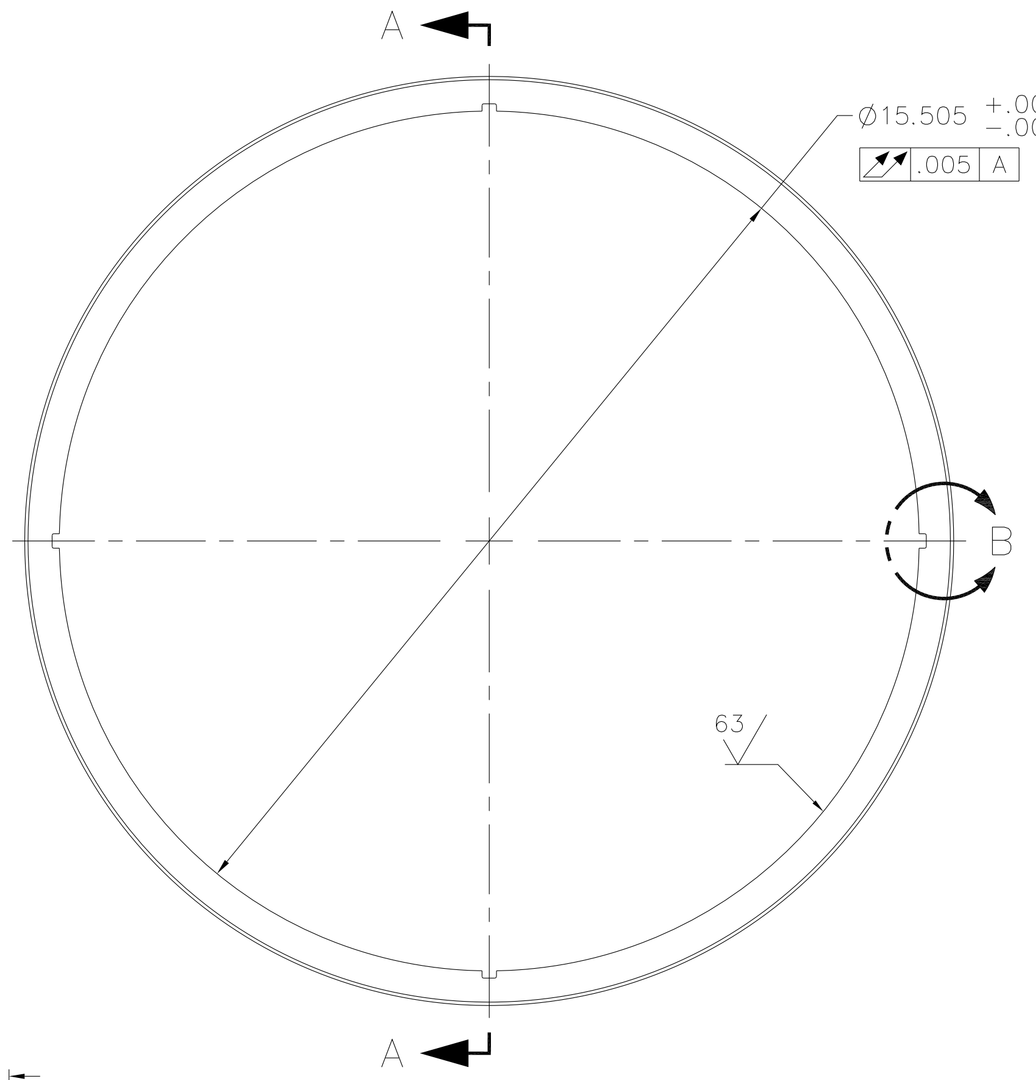

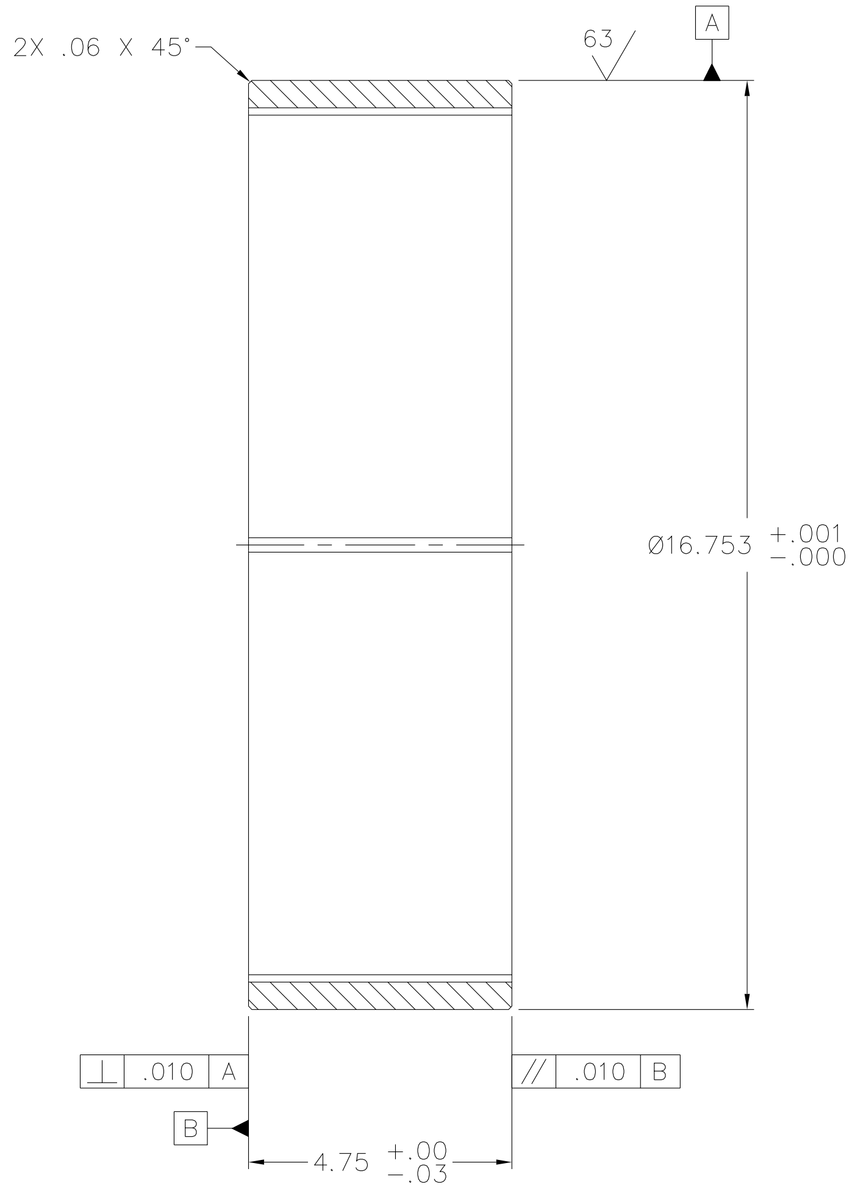

SECTION A–A

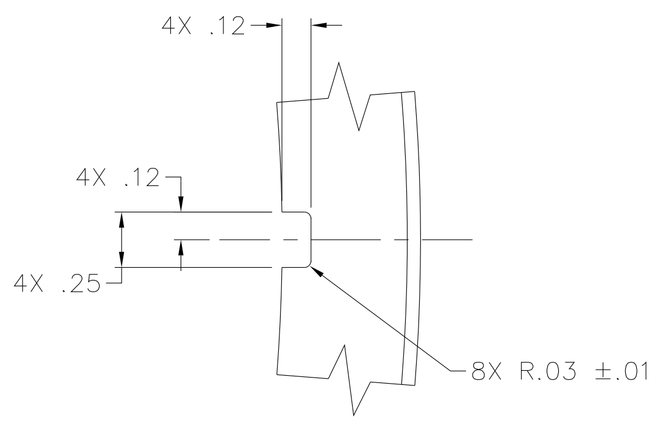

DETAIL B
SCALE: 2/1

PART OR IDENTIFYING NO.	QTY REQD	CODE IDENT NO.	DRAWING OR SPECIFICATION	NOMENCLATURE OR DESCRIPTION	REMARKS
1	1	–	8287565	BUSHING CASTING	

PARTS LIST

NOTICE OF CONFIGURATION CONTROL

THIS DRAWING DEFINES AN ITEM OF UNDERWAY REPLENISHMENT (UNREP) STANDARD HARDWARE. NO REVISION TO THIS DRAWING OR THE HARDWARE REPRESENTED BY IT IS AUTHORIZED WITHOUT THE WRITTEN APPROVAL OF THE NAVAL SEA SYSTEMS COMMAND.

DISTRIBUTION STATEMENT C: DISTRIBUTION AUTHORIZED TO U.S. GOVERNMENT AGENCIES AND THEIR CONTRACTORS; OTHER REQUESTS MUST BE REFERRED TO COMNAVSEA OR THE COGNIZANT NAVSEA CODE.

WARNING: THIS DOCUMENT CONTAINS TECHNICAL DATA WHOSE EXPORT IS RESTRICTED BY THE ARMS EXPORT CONTROL ACT (TITLE 22, U.S.C. SEC. 2751 ET SEQ.) OR EXECUTIVE ORDER 12470. VIOLATIONS OF THESE EXPORT LAWS ARE SUBJECT TO SEVERE CRIMINAL PENALTIES.

DESTRUCTION NOTICE: DESTROY BY ANY METHOD THAT WILL PREVENT DISCLOSURE OF CONTENTS OR RECONSTRUCTION OF THE DOCUMENT.

APPLICATION	
NEXT ASSY	USED ON
8287501	8287500

MATERIAL:

UNLESS OTHERWISE SPECIFIED:
ALL DIMENSIONS ARE IN INCHES
TOLERANCES: ANGLES± .5°
FRACTIONS±
DECIMALS
.XX± .02
.XXX±
BEND RADII
FILLETS & ROUNDS
SURFACE FINISH 250
BREAK ALL SHARP EDGES

INTERPRET DRAWING IN ACCORDANCE WITH STANDARDS PRESCRIBED IN ASME Y14.100

DO NOT SCALE THIS DRAWING

PORT HUENEME DIVISION NAVAL SURFACE WARFARE CENTER 4363 MISSILE WAY PORT HUENEME, CA 93043-4307		
PREPARED	AMSEC	06-07
CHECKED		
TECH LEAD		
BR HD		
ACCEPTED BY NAVSEA	(SIGNATURE DOES NOT DENOTE APPROVAL)	
APPROVED FOR NAVSEA	(SIGN ONLY IF ENGINEERING HAS BEEN "PROVED" BY MANUFACTURE AND TEST)	

DEPARTMENT OF THE NAVY
NAVAL SEA SYSTEMS COMMAND
WASHINGTON, D.C. 20376-5160

HEAVY UNREP–NAVY STANDARD
RAM TENSIONER

LWR RAM GUIDE BUSHING

SIZE	CAGE CODE	NAVSEA DWG NO.	REV
D	53711	8287564	–

SCALE 1/2 | UNIT WT 47.9 LBS | SHEET 1 OF 1

8287564

NSWC 4120/8 (REV 03-92)

REVISIONS				
ZONE	LTR	DESCRIPTION	DATE	APPROVED

NOTES:

1. CONDUCT 100% RADIOGRAPHIC INSPECTION PER NAVSEA T9074-AS-GIB-010/271. INSPECTON SHALL ALSO COMPLY WITH THE CASTING INSPECTION REQUIREMENTS OF NAVSEA S9074-AR-GIB-010/278, CATEGORY 1, SUBCATEGORY C1, ACCEPTANCE CRITERIA: CRITICALITY LEVEL 1, OVER 1/2 INCH.

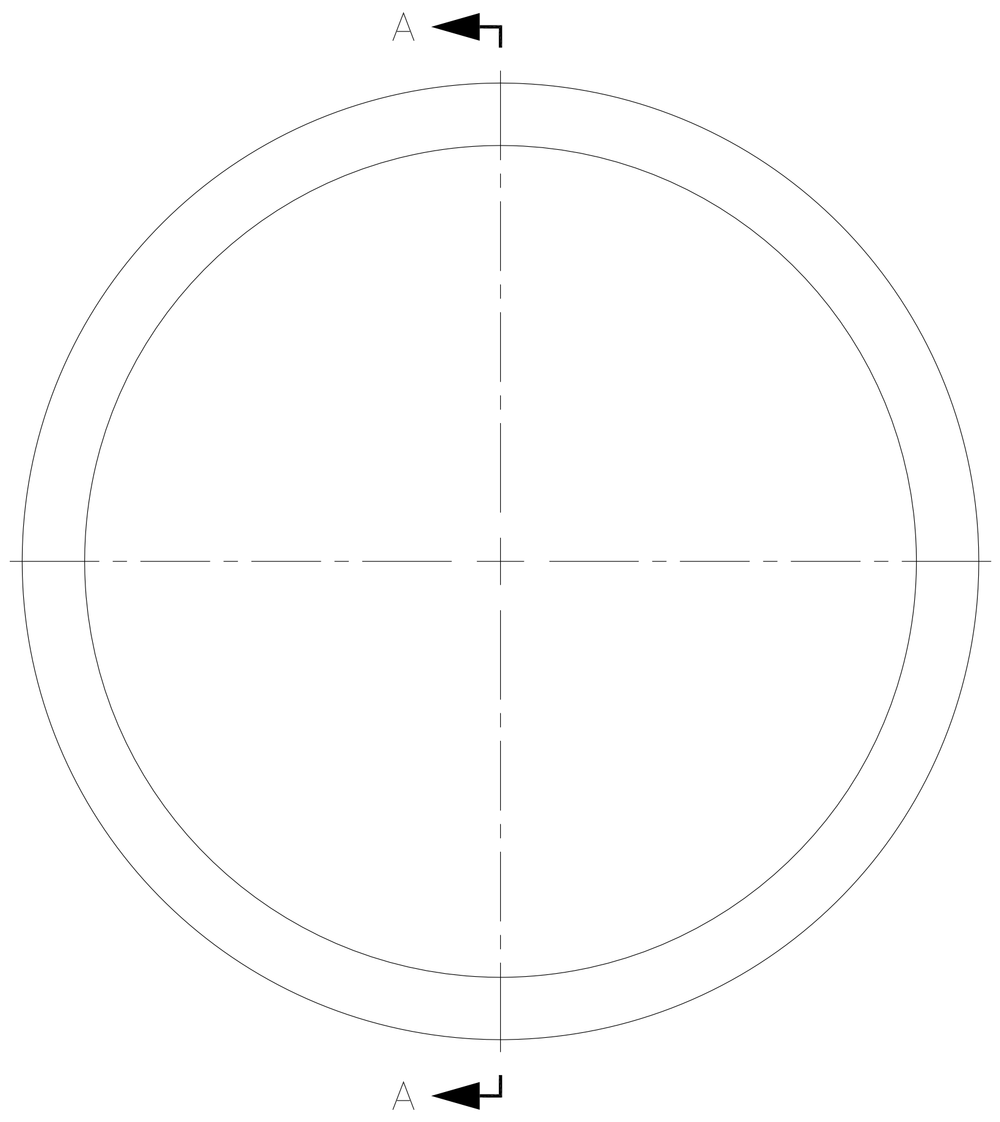

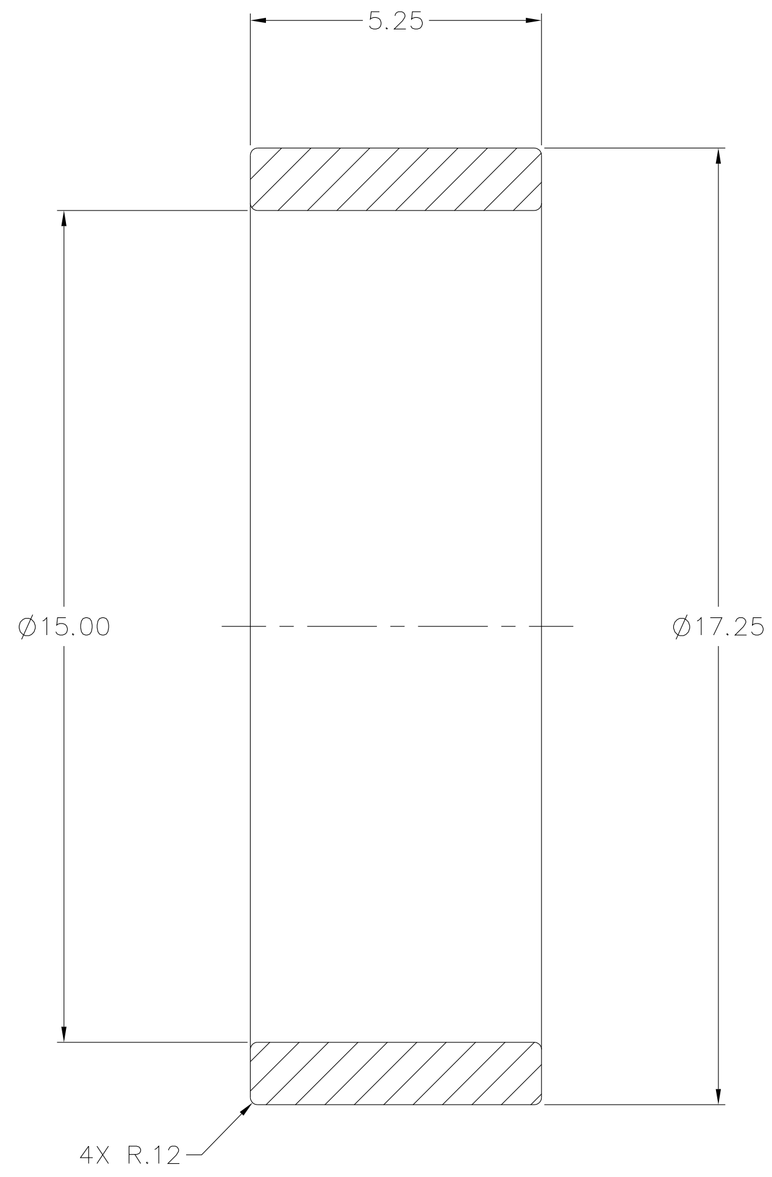

SECTION A-A

PART OR IDENTIFYING NO.	QTY REQD	CODE IDENT NO.	DRAWING OR SPECIFICATION	NOMENCLATURE OR DESCRIPTION	REMARKS

PARTS LIST

NOTICE OF CONFIGURATION CONTROL

THIS DRAWING DEFINES AN ITEM OF UNDERWAY REPLENISHMENT (UNREP) STANDARD HARDWARE. NO REVISION TO THIS DRAWING OR THE HARDWARE REPRESENTED BY IT IS AUTHORIZED WITHOUT THE WRITTEN APPROVAL OF THE NAVAL SEA SYSTEMS COMMAND.

DISTRIBUTION STATEMENT C: DISTRIBUTION AUTHORIZED TO U.S. GOVERNMENT AGENCIES AND THEIR CONTRACTORS; OTHER REQUESTS MUST BE REFERRED TO COMNAVSEA OR THE COGNIZANT NAVSEA CODE.

WARNING: THIS DOCUMENT CONTAINS TECHNICAL DATA WHOSE EXPORT IS RESTRICTED BY THE ARMS EXPORT CONTROL ACT (TITLE 22, U.S.C. SEC. 2751 ET SEQ.) OR EXECUTIVE ORDER 12470. VIOLATIONS OF THESE EXPORT LAWS ARE SUBJECT TO SEVERE CRIMINAL PENALTIES.

DESTRUCTION NOTICE: DESTROY BY ANY METHOD THAT WILL PREVENT DISCLOSURE OF CONTENTS OR RECONSTRUCTION OF THE DOCUMENT.

APPLICATION	
NEXT ASSY	USED ON
8287564	8287500
8287567	

MATERIAL:

BRONZE
ASTM B271
C93200
OR
ASTM B505
C93400

UNLESS OTHERWISE SPECIFIED:
ALL DIMENSIONS ARE IN INCHES
TOLERANCES: ANGLES±
FRACTIONS±
DECIMALS
.XX± .06
.XXX±
BEND RADII
FILLETS & ROUNDS
AS CAST/
SURFACE FINISH √
BREAK ALL SHARP EDGES

INTERPRET DRAWING IN ACCORDANCE WITH STANDARDS PRESCRIBED IN ASME Y14.100

DO NOT SCALE THIS DRAWING

PORT HUENEME DIVISION
NAVAL SURFACE WARFARE CENTER
4363 MISSILE WAY
PORT HUENEME, CA 93043-4307

PREPARED	AMSEC	06-07
CHECKED		
TECH LEAD		
BR HD		
ACCEPTED BY NAVSEA		(SIGNATURE DOES NOT DENOTE APPROVAL)
APPROVED FOR NAVSEA		(SIGN ONLY IF ENGINEERING HAS BEEN "PROVED" BY MANUFACTURE AND TEST)

DEPARTMENT OF THE NAVY
NAVAL SEA SYSTEMS COMMAND
WASHINGTON, D.C. 20376-5160

HEAVY UNREP-NAVY STANDARD
RAM TENSIONER

BUSHING CASTING

SIZE	CAGE CODE	NAVSEA DWG NO.	REV
D	53711	8287565	—

SCALE 1/2 | UNIT WT 53.5 LBS | SHEET 1 OF 1

8287565

NSWC 4120/8 (REV 03-92)

REVISIONS				
ZONE	LTR	DESCRIPTION	DATE	APPROVED

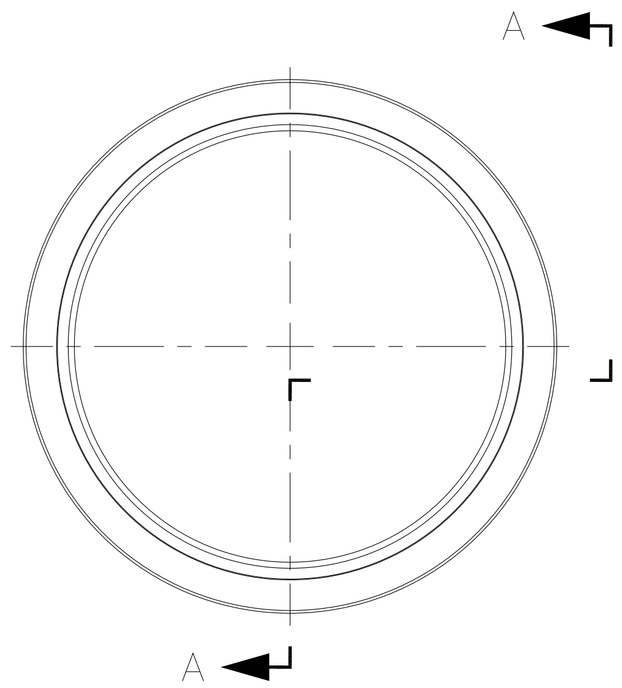

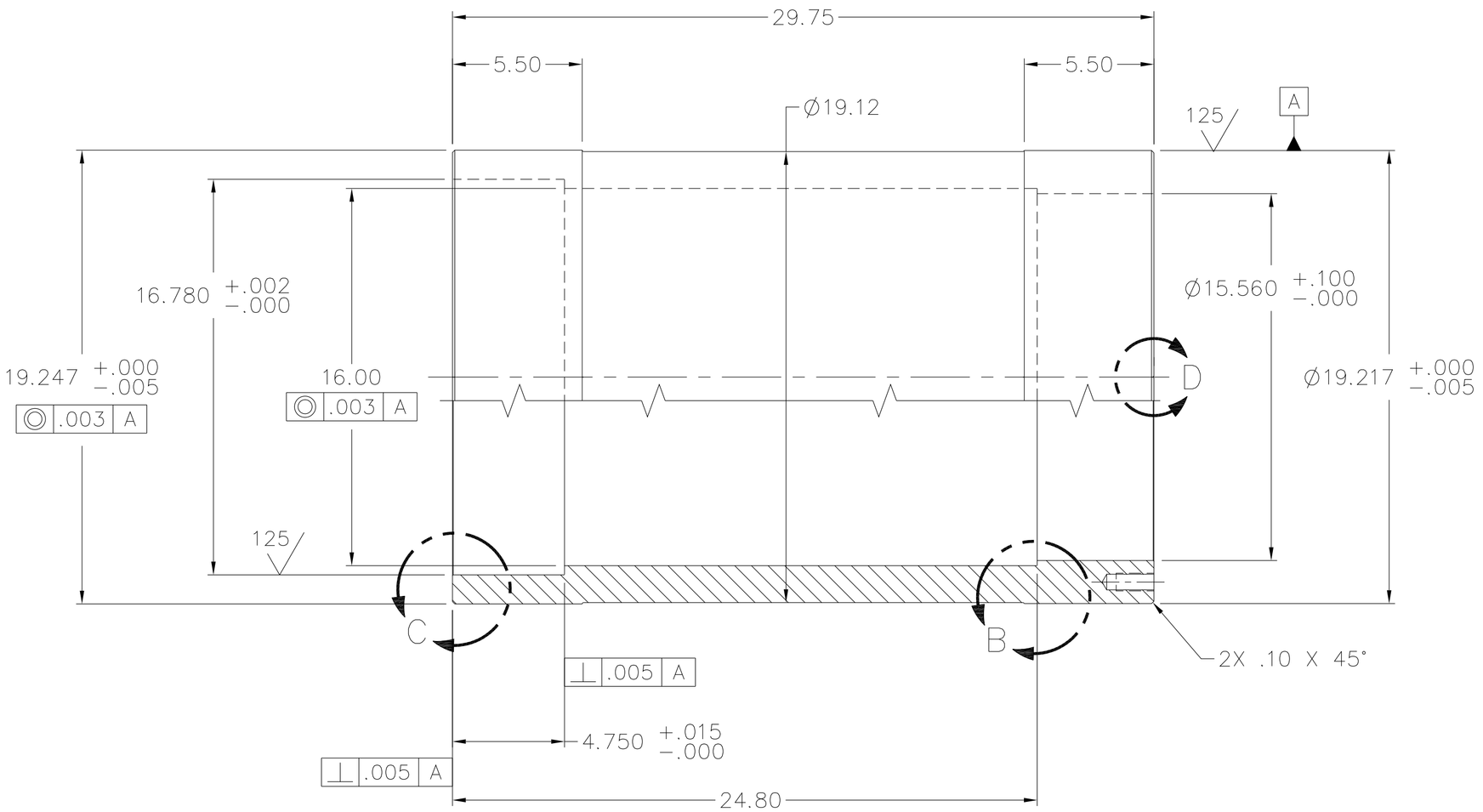

SECTION A–A
SCALE: 1/4

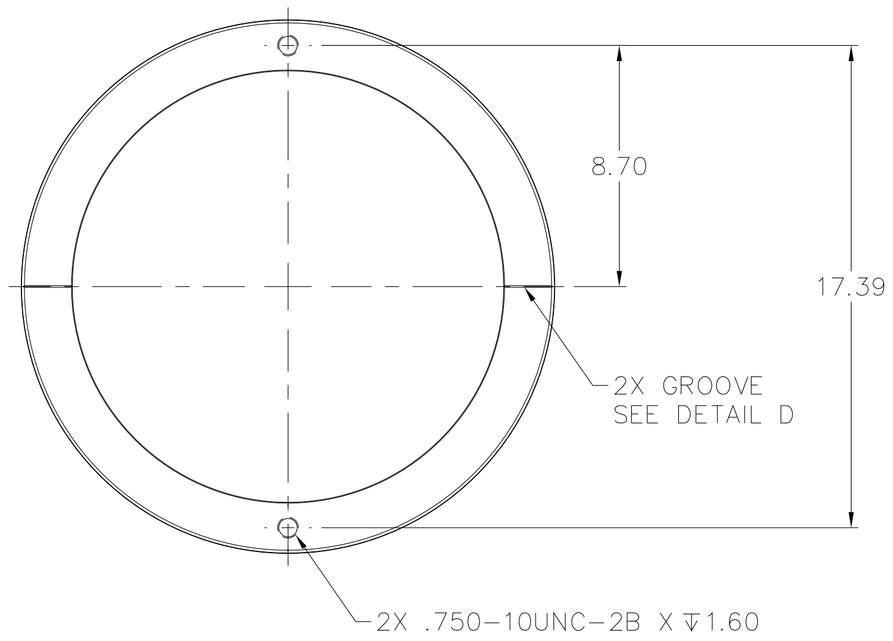

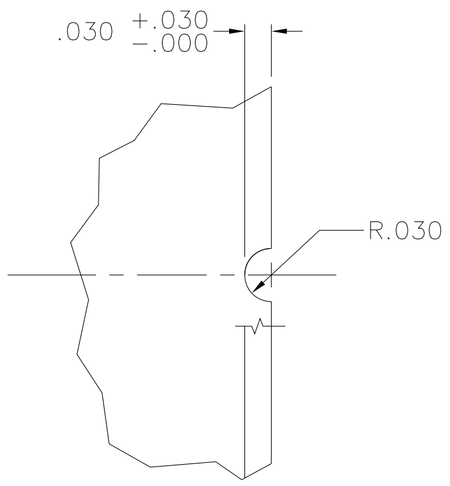

DETAIL D
SCALE: 8/1

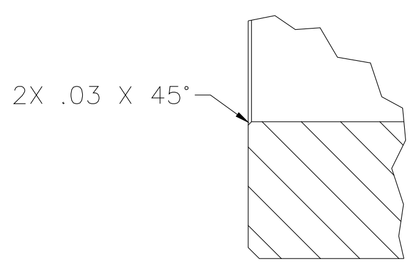

DETAIL C
SCALE: 1/1

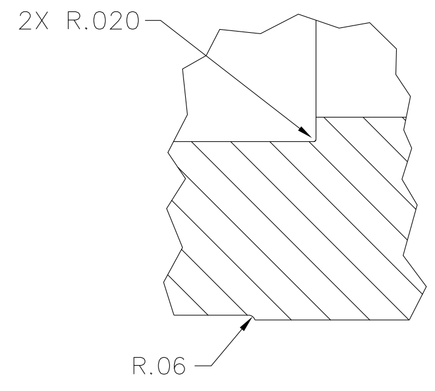

DETAIL B
SCALE: 1/1

NOTICE OF CONFIGURATION CONTROL

THIS DRAWING DEFINES AN ITEM OF UNDERWAY REPLENISHMENT (UNREP) STANDARD HARDWARE. NO REVISION TO THIS DRAWING OR THE HARDWARE REPRESENTED BY IT IS AUTHORIZED WITHOUT THE WRITTEN APPROVAL OF THE NAVAL SEA SYSTEMS COMMAND.

DISTRIBUTION STATEMENT C: DISTRIBUTION AUTHORIZED TO U.S. GOVERNMENT AGENCIES AND THEIR CONTRACTORS; OTHER REQUESTS MUST BE REFERRED TO COMNAVSEA OR THE COGNIZANT NAVSEA CODE.

WARNING: THIS DOCUMENT CONTAINS TECHNICAL DATA WHOSE EXPORT IS RESTRICTED BY THE ARMS EXPORT CONTROL ACT (TITLE 22, U.S.C. SEC. 2751 ET SEQ.) OR EXECUTIVE ORDER 12470. VIOLATIONS OF THESE EXPORT LAWS ARE SUBJECT TO SEVERE CRIMINAL PENALTIES.

DESTRUCTION NOTICE: DESTROY BY ANY METHOD THAT WILL PREVENT DISCLOSURE OF CONTENTS OR RECONSTRUCTION OF THE DOCUMENT.

APPLICATION	
NEXT ASSY	USED ON
8287501	8287500

MATERIAL:

STEEL
ASTM A106
GRADE C

PART OR IDENTIFYING NO.	QTY REQD	CODE IDENT NO.	DRAWING OR SPECIFICATION	NOMENCLATURE OR DESCRIPTION	REMARKS

PARTS LIST

UNLESS OTHERWISE SPECIFIED:
ALL DIMENSIONS ARE IN INCHES
TOLERANCES: ANGLES± .5°
FRACTIONS±
DECIMALS
.XX± .02
.XXX± .005
BEND RADII
FILLETS & ROUNDS
SURFACE FINISH 250/
BREAK ALL SHARP EDGES

INTERPRET DRAWING IN ACCORDANCE WITH STANDARDS PRESCRIBED IN ASME Y14.100

DO NOT SCALE THIS DRAWING

PREPARED	AMSEC	06–07
CHECKED		
TECH LEAD		
BR HD		
ACCEPTED BY NAVSEA		(SIGNATURE DOES NOT DENOTE APPROVAL)
APPROVED FOR NAVSEA		(SIGN ONLY IF ENGINEERING HAS BEEN "PROVED" BY MANUFACTURE AND TEST)

PORT HUENEME DIVISION
NAVAL SURFACE WARFARE CENTER
4363 MISSILE WAY
PORT HUENEME, CA 93043–4307

DEPARTMENT OF THE NAVY
NAVAL SEA SYSTEMS COMMAND
WASHINGTON, D.C. 20376–5160

HEAVY UNREP–NAVY STANDARD
RAM TENSIONER

CARRIER BUSHING

SIZE	CAGE CODE	NAVSEA DWG NO.	REV
D	53711	8287566	–

SCALE NOTED | UNIT WT 730.0 LBS | SHEET 1 OF 1

8287566

NSWC 4120/8 (REV 03–92)

REVISIONS				
ZONE	LTR	DESCRIPTION	DATE	APPROVED

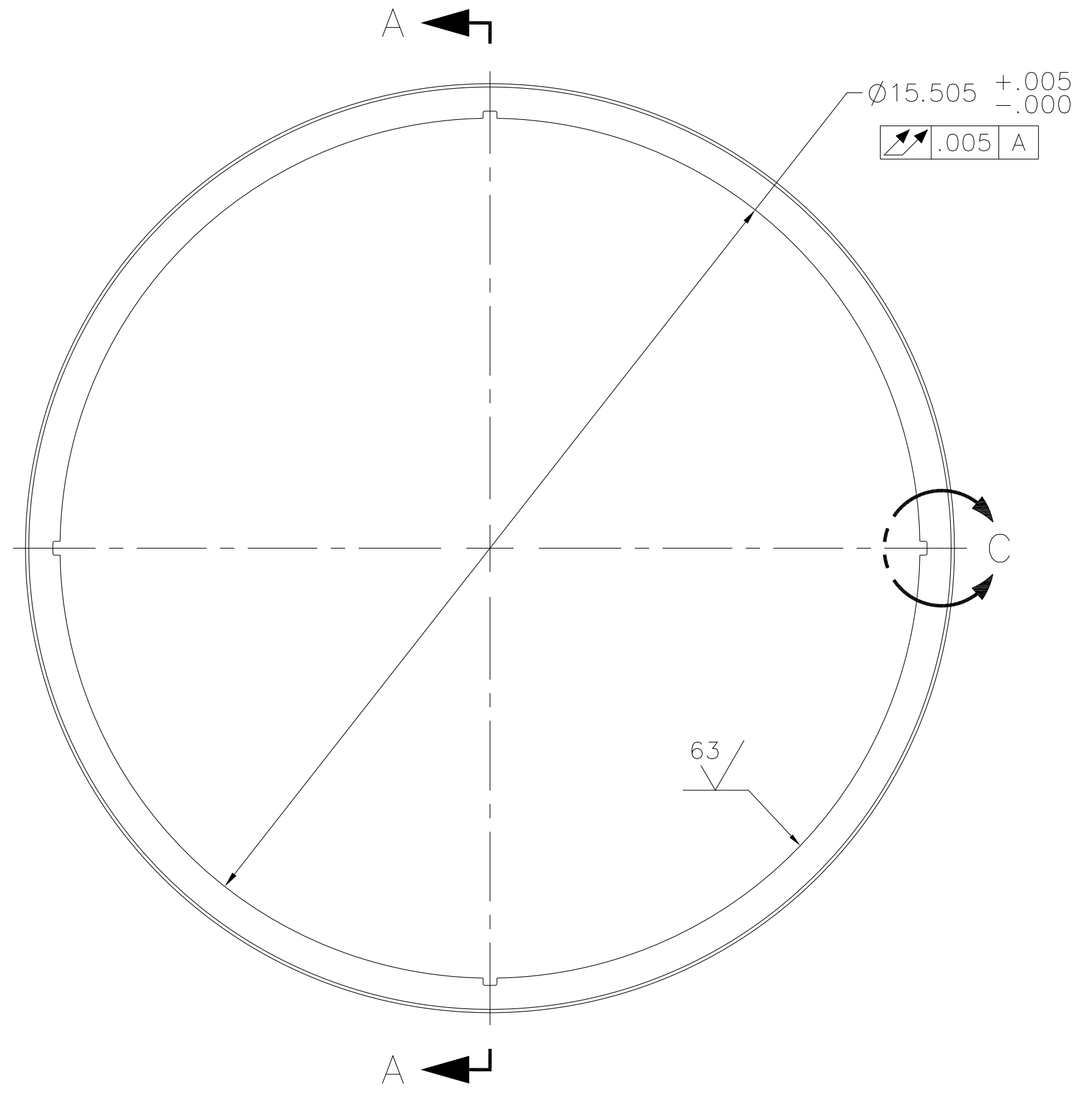

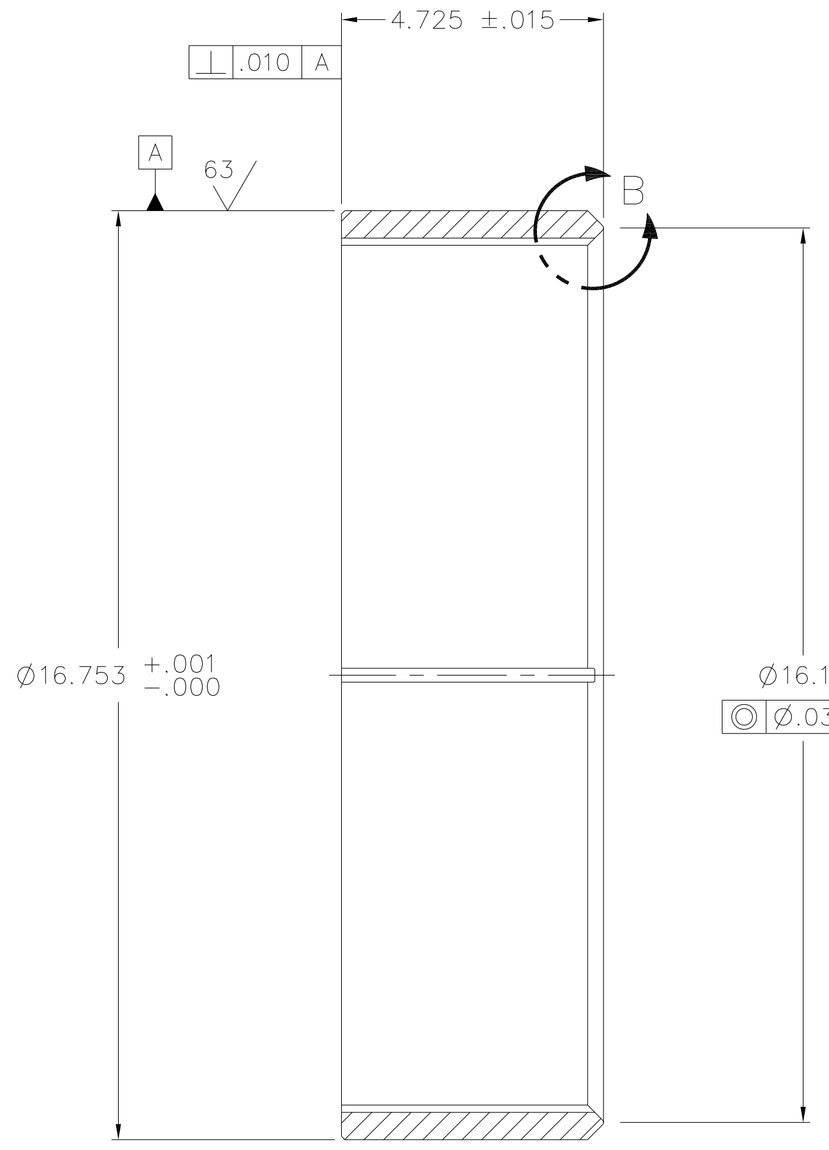

SECTION A–A

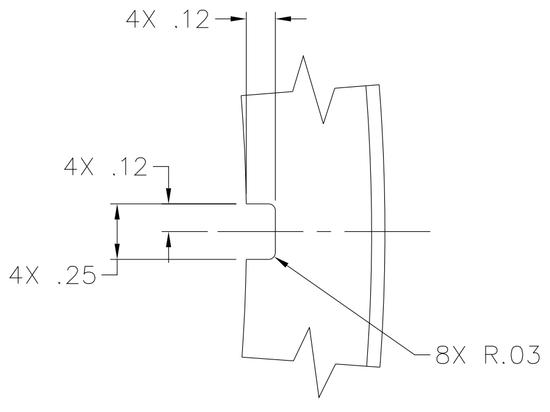

DETAIL C
SCALE: 2/1

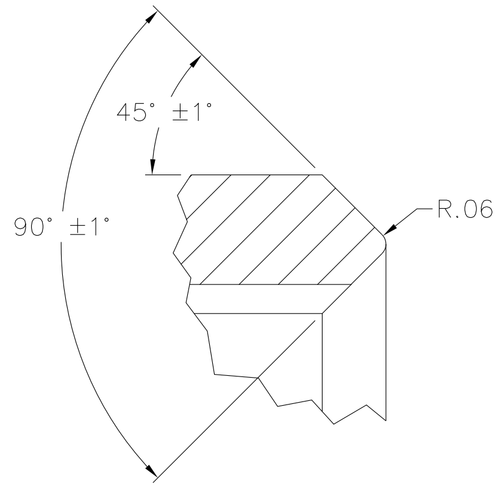

DETAIL B
SCALE: 2/1

NOTICE OF CONFIGURATION CONTROL

THIS DRAWING DEFINES AN ITEM OF UNDERWAY REPLENISHMENT (UNREP) STANDARD HARDWARE. NO REVISION TO THIS DRAWING OR THE HARDWARE REPRESENTED BY IT IS AUTHORIZED WITHOUT THE WRITTEN APPROVAL OF THE NAVAL SEA SYSTEMS COMMAND.

DISTRIBUTION STATEMENT C: DISTRIBUTION AUTHORIZED TO U.S. GOVERNMENT AGENCIES AND THEIR CONTRACTORS; OTHER REQUESTS MUST BE REFERRED TO COMNAVSEA OR THE COGNIZANT NAVSEA CODE.

WARNING: THIS DOCUMENT CONTAINS TECHNICAL DATA WHOSE EXPORT IS RESTRICTED BY THE ARMS EXPORT CONTROL ACT (TITLE 22, U.S.C. SEC. 2751 ET SEQ.) OR EXECUTIVE ORDER 12470. VIOLATIONS OF THESE EXPORT LAWS ARE SUBJECT TO SEVERE CRIMINAL PENALTIES.

DESTRUCTION NOTICE: DESTROY BY ANY METHOD THAT WILL PREVENT DISCLOSURE OF CONTENTS OR RECONSTRUCTION OF THE DOCUMENT.

APPLICATION	
NEXT ASSY	USED ON
8287501	8287500

MATERIAL:

UNLESS OTHERWISE SPECIFIED:
ALL DIMENSIONS ARE IN INCHES
TOLERANCES: ANGLES± .5°
FRACTIONS±
DECIMALS
.XX± .02
.XXX±
BEND RADII
FILLETS & ROUNDS 250/
SURFACE FINISH
BREAK ALL SHARP EDGES

INTERPRET DRAWING IN ACCORDANCE WITH STANDARDS PRESCRIBED IN ASME Y14.100

DO NOT SCALE THIS DRAWING

PARTS LIST					
PART OR IDENTIFYING NO.	QTY REQD	CODE IDENT NO.	DRAWING OR SPECIFICATION	NOMENCLATURE OR DESCRIPTION	REMARKS
1	1	–	8287565	BUSHING CASTING	

PREPARED	AMSEC	06–07
CHECKED		
TECH LEAD		
BR HD		
ACCEPTED BY NAVSEA	(SIGNATURE DOES NOT DENOTE APPROVAL)	
APPROVED FOR NAVSEA	(SIGN ONLY IF ENGINEERING HAS BEEN "PROVED" BY MANUFACTURE AND TEST)	

PORT HUENEME DIVISION
NAVAL SURFACE WARFARE CENTER
4363 MISSILE WAY
PORT HUENEME, CA 93043–4307

DEPARTMENT OF THE NAVY
NAVAL SEA SYSTEMS COMMAND
WASHINGTON, D.C. 20376–5160

HEAVY UNREP–NAVY STANDARD
RAM TENSIONER

UPPER RAM GUIDE BUSHING

SIZE	CAGE CODE	NAVSEA DWG NO.	REV
D	53711	8287567	–

SCALE 1/2 | UNIT WT 46.3 LBS | SHEET 1 OF 1

8287567

NSWC 4120/8 (REV 03–92)

REVISIONS				
ZONE	LTR	DESCRIPTION	DATE	APPROVED

NOTES:

1. PRIOR TO ASSEMBLY, APPLY LED-PLATE ANTISEIZE COMPOUND, PC 4, TO ALL THREADS, FOLLOW MANUFACTURER'S INSTRUCTIONS FOR APPLICATION.

2. THE FOLLOWING ITEM SHALL BE PROCURED FROM THE VENDOR LISTED. A SUBSTITUTE ITEM SHALL NOT BE USED WITHOUT PRIOR APPROVAL BY THE NAVY.

2.1 PC 4 ANTISEIZE COMPOUND, LED-PLATE
APPROVED SOURCE OF SUPPLY:
ARMITE LABORATORIES INC
1560 SUPERIOR AVE STE A4
COSTA MESA, CA 92627-3676
CODE IDENT: 84180
PART NO LP-250 (MEETS MIL-PRF-907)

3. BULK ITEM (PC 4, 5) FIND NUMBERS ARE NOT SHOWN ON THE FACE OF THE DRAWING.

4. BEFORE INSTALLING PLUGS, PC 2, FILL RAM WITH CORROSION PREVENTIVE COMPOUND, PC 5, AND DRAIN. AFTER DRAINING, INSTALL PLUGS.

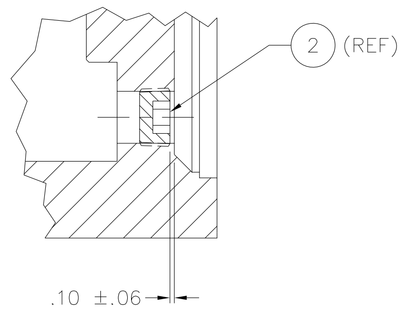

DETAIL B
SCALE: 1/2

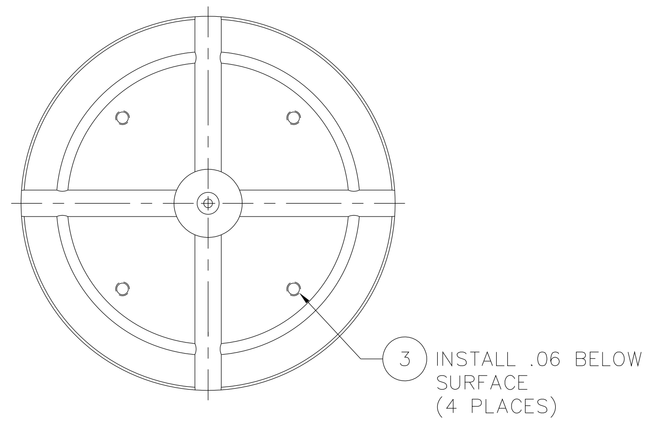

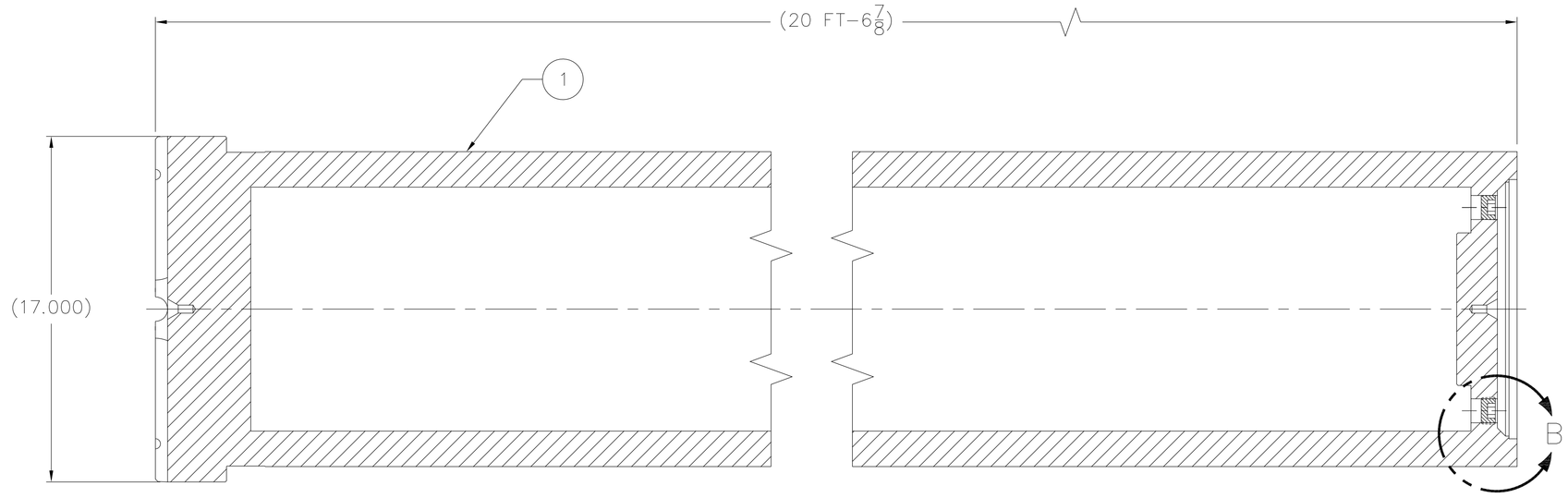

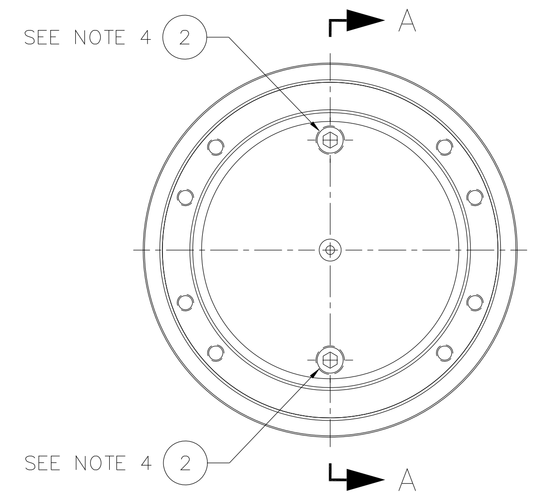

SECTION A-A

PART OR IDENTIFYING NO.	QTY REQD	CODE IDENT NO.	DRAWING OR SPECIFICATION	NOMENCLATURE OR DESCRIPTION	REMARKS
5	AR	–	MIL-PRF-16173, CL II, GR 1	CORROSION PREVENTIVE COMPOUND	SEE NOTE 4
4	AR	–	MIL-PRF-907	ANTISEIZE COMPOUND	SEE NOTE 1 & 2
3	4	–	NASM51963-157	SET SCREW	5/8-11UNC-3A X 1
2	2	–	MS27769-7	PIPE PLUG	1 NPT
1	1	–	8287569	RAM	

PARTS LIST

APPLICATION	
NEXT ASSY	USED ON
8287501	8287500

MATERIAL:

UNLESS OTHERWISE SPECIFIED:
ALL DIMENSIONS ARE IN INCHES
TOLERANCES: ANGLES±
FRACTIONS±
DECIMALS
.XX±
.XXX±
BEND RADII
FILLETS & ROUNDS
SURFACE FINISH √
BREAK ALL SHARP EDGES
INTERPRET DRAWING IN ACCORDANCE WITH STANDARDS PRESCRIBED IN ASME Y14.100
DO NOT SCALE THIS DRAWING

PORT HUENEME DIVISION
NAVAL SURFACE WARFARE CENTER
4363 MISSILE WAY
PORT HUENEME, CA 93043-4307

PREPARED	AMSEC	06-07
CHECKED		
TECH LEAD		
BR HD		
ACCEPTED BY NAVSEA	(SIGNATURE DOES NOT DENOTE APPROVAL)	
APPROVED FOR NAVSEA	(SIGN ONLY IF ENGINEERING HAS BEEN "PROVED" BY MANUFACTURE AND TEST)	

DEPARTMENT OF THE NAVY
NAVAL SEA SYSTEMS COMMAND
WASHINGTON,D.C. 20376-5160

HEAVY UNREP-NAVY STANDARD
RAM TENSIONER

RAM ASSEMBLY

SIZE	CAGE CODE	NAVSEA DWG. NO.	REV
F	53711	8287568	–

SCALE 1/4 | UNIT WT 5530.0 LBS | SHEET 1 OF 1

8287568

NOTICE OF CONFIGURATION CONTROL

THIS DRAWING DEFINES AN ITEM OF UNDERWAY REPLENISHMENT (UNREP) STANDARD HARDWARE. NO REVISION TO THIS DRAWING OR THE HARDWARE REPRESENTED BY IT IS AUTHORIZED WITHOUT THE WRITTEN APPROVAL OF THE NAVAL SEA SYSTEMS COMMAND.

DISTRIBUTION STATEMENT C: DISTRIBUTION AUTHORIZED TO U.S. GOVERNMENT AGENCIES AND THEIR CONTRACTORS; OTHER REQUESTS MUST BE REFERRED TO COMNAVSEA OR THE COGNIZANT NAVSEA CODE.

WARNING: THIS DOCUMENT CONTAINS TECHNICAL DATA WHOSE EXPORT IS RESTRICTED BY THE ARMS EXPORT CONTROL ACT (TITLE 22, U.S.C. SEC. 2751 ET SEQ.) OR EXECUTIVE ORDER 12470. VIOLATIONS OF THESE EXPORT LAWS ARE SUBJECT TO SEVERE CRIMINAL PENALTIES.

DESTRUCTION NOTICE: DESTROY BY ANY METHOD THAT WILL PREVENT DISCLOSURE OF CONTENTS OR RECONSTRUCTION OF THE DOCUMENT.

NSWC 4120/7A (REV. 03-92)

NOTICE OF CONFIGURATION CONTROL

THIS DRAWING DEFINES AN ITEM OF UNDERWAY REPLENISHMENT (UNREP) STANDARD HARDWARE. NO REVISION TO THIS DRAWING OR THE HARDWARE REPRESENTED BY IT IS AUTHORIZED WITHOUT THE WRITTEN APPROVAL OF THE NAVAL SEA SYSTEMS COMMAND.

DISTRIBUTION STATEMENT C: DISTRIBUTION AUTHORIZED TO U.S. GOVERNMENT AGENCIES AND THEIR CONTRACTORS; OTHER REQUESTS MUST BE REFERRED TO COMNAVSEA OR THE COGNIZANT NAVSEA CODE.

WARNING: THIS DOCUMENT CONTAINS TECHNICAL DATA WHOSE EXPORT IS RESTRICTED BY THE ARMS EXPORT CONTROL ACT (TITLE 22, U.S.C. SEC. 2751 ET SEQ.) OR EXECUTIVE ORDER 12470. VIOLATIONS OF THESE EXPORT LAWS ARE SUBJECT TO SEVERE CRIMINAL PENALTIES.

DESTRUCTION NOTICE: DESTROY BY ANY METHOD THAT WILL PREVENT DISCLOSURE OF CONTENTS OR RECONSTRUCTION OF THE DOCUMENT.

APPLICATION	
NEXT ASSY	USED ON
8287568	8287500

MATERIAL:

UNLESS OTHERWISE SPECIFIED:
ALL DIMENSIONS ARE IN INCHES
TOLERANCES: ANGLES± FRACTIONS± 1/32 DECIMALS .XX± .02 .XXX± .005
BEND RADII FILLETS & ROUNDS
SURFACE FINISH √
BREAK ALL SHARP EDGES
INTERPRET DRAWING IN ACCORDANCE WITH STANDARDS PRESCRIBED IN ASME Y14.100
DO NOT SCALE THIS DRAWING

PREPARED	AMSEC	06-07
CHECKED		
TECH LEAD		
BR HD		
ACCEPTED BY NAVSEA	(SIGNATURE DOES NOT APPROVAL)	
APPROVED FOR NAVSEA	(SIGN ONLY IF ENGINEERING HAS BEEN TRANSFERRED TO MANUFACTURE AND TEST)	

PORT HUENEME DIVISION
NAVAL SURFACE WARFARE CENTER
4363 MISSILE WAY
PORT HUENEME, CA 93043-4307

DEPARTMENT OF THE NAVY
NAVAL SEA SYSTEMS COMMAND
WASHINGTON,D.C. 20376-5160

HEAVY UNREP-NAVY STANDARD
RAM TENSIONER

RAM, MACHINING

SIZE	CAGE CODE	NAVSEA DWG. NO.	REV
F	53711	8287569	—

SCALE 1/4 | UNIT WT 5530 LBS | SHEET 1 OF 1

PARTS LIST				
IDENTIFYING NO.	QTY REQD	CODE IDENT NO.	DRAWING OR SPECIFICATION	NOMENCLATURE OR DESCRIPTION	REMARKS
1	1	—	8287570	RAM WELDMENT	

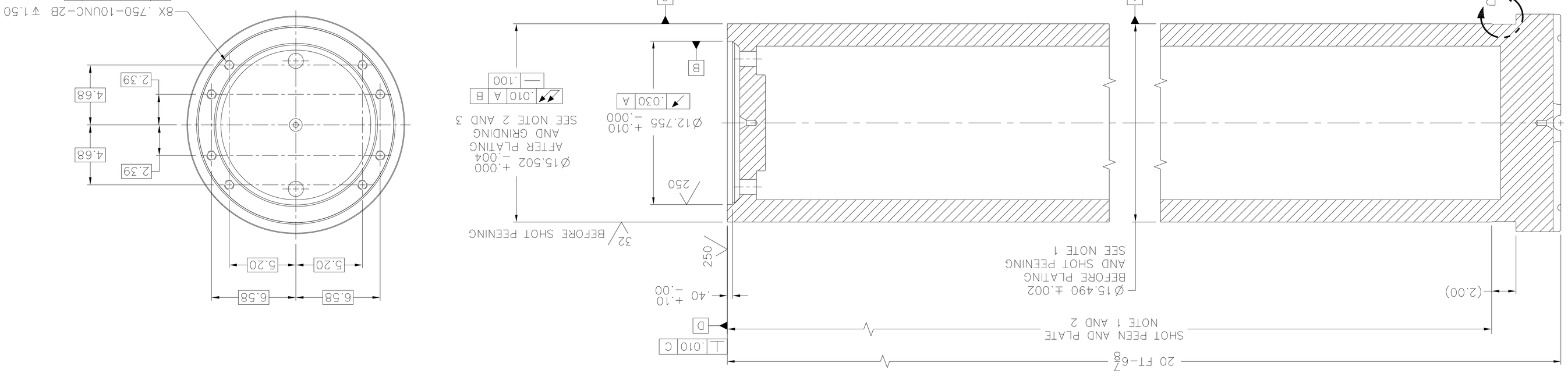

DETAIL B
UNDERCUT FOR GRINDING WHEEL CLEARANCE
NO PLATING AND PEENING REQUIRED
SCALE: 1/1

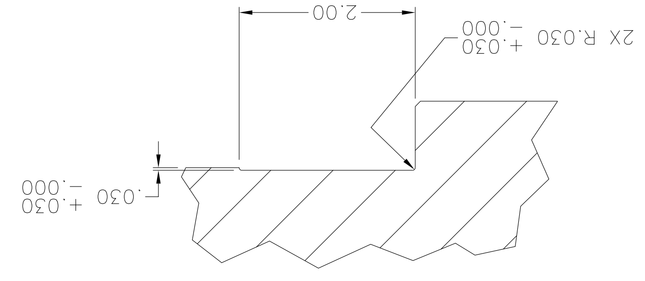

NOTES:

1. AFTER INITIAL MACHINING, SHOT PEEN IN ACCORDANCE WITH MIL-R-81841 OR SAE-AMS-S-13165, INTENSITY .006-.010 INCH. PLUG ALL THREADED HOLES BEFORE SHOT PEENING.
2. AFTER SHOT PEENING, HARD CHROMIUM PLATE SURFACE INDICATED IN ACCORDANCE WITH SAE-AMS-QQ-C-320, CLASS 2. CHROMIUM THICKNESS AFTER FINAL GRINDING TO DIMENSION SHALL BE .005-.008 INCH WITH RAM IN VERTICAL POSITION.
3. TOTAL RUNOUT AND FLATNESS TOLERANCES APPLY WITH RAM IN VERTICAL POSITION.

REVISIONS			
ZONE	LTR	DESCRIPTION	DATE	APPROVED

NOTES:

1. WELDING REQUIREMENTS:

1.1 FABRICATION, WELDING, STRESS RELIEF AND INSPECTION SHALL BE IN ACCORDANCE WITH NAVSEA S9074-AR-GIB-010/278 AND T9074-AS-GIB-010/271, CLASS M-2, CATEGORY A. ALL WELDS ON THIS DRAWING ARE CLASSIFIED AS CATEGORY A AND REQUIRE ULTRASONIC (UT) INSPECTION.

1.2 WHERE NOTED, CONDUCT 100% ULTRASONIC (UT) INSPECTION FOR WELDING IN ACCORDANCE WITH ASME BOILER AND PRESSURE VESSEL CODE SECTION V – NONDESTRUCTIVE EXAMINATION.

1.3 WELD INSPECTION STARTS AT ROOT WELD IAW TECHNICAL PUBLICATIONS LISTED IN 1.1 ABOVE.

1.4 UNLESS OTHERWISE SPECIFIED ON THIS DRAWING, ALL DIMENSIONS AND TOLERANCES REFER TO FINISHED PRODUCT.

2. DIMENSIONS PROVIDED IN REMARKS COLUMN OF PARTS LIST ARE REFERENCE ONLY UNLESS THERE IS NO DETAILED VIEW WHICH SPECIFIES REQUIRED DIMENSIONS.

3. WELDMENT MAY BE STRAIGHTENED IF REQUIRED TO MEET DIMENSIONAL REQUIREMENTS ON THE FACE OF DRAWING.

4. STOCK SIZE IN REMARKS COLUMN OF PARTS LIST IS NOMINAL WITHOUT MANUFACTURING ALLOWANCE.

REVISIONS				
ZONE	LTR	DESCRIPTION	DATE	APPROVED

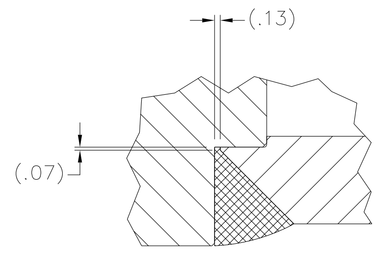

DETAIL B
SCALE: 1/2

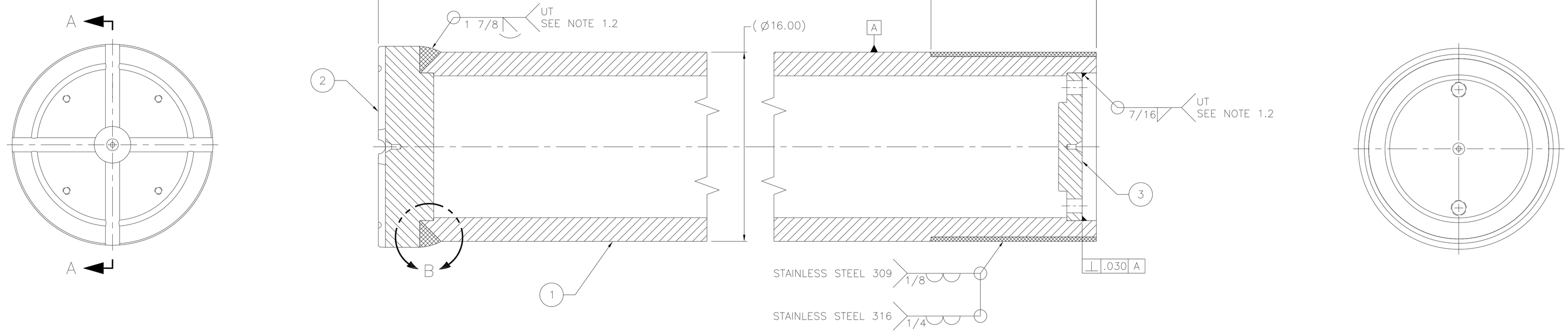

SECTION A-A

PART OR IDENTIFYING NO.	QTY REQD	CODE IDENT NO.	DRAWING OR SPECIFICATION	NOMENCLATURE OR DESCRIPTION	REMARKS
3	1	–	–	PLATE	13 DIA X 2
2	1	–	–	PLATE	17 1/2 DIA X 5
1	1	–	–	SEAMLESS TUBE	16 OD X 2 WALL X 20FT-3 1/2

PARTS LIST

NOTICE OF CONFIGURATION CONTROL

THIS DRAWING DEFINES AN ITEM OF UNDERWAY REPLENISHMENT (UNREP) STANDARD HARDWARE. NO REVISION TO THIS DRAWING OR THE HARDWARE REPRESENTED BY IT IS AUTHORIZED WITHOUT THE WRITTEN APPROVAL OF THE NAVAL SEA SYSTEMS COMMAND.

DISTRIBUTION STATEMENT C: DISTRIBUTION AUTHORIZED TO U.S. GOVERNMENT AGENCIES AND THEIR CONTRACTORS; OTHER REQUESTS MUST BE REFERRED TO COMNAVSEA OR THE COGNIZANT NAVSEA CODE.

WARNING: THIS DOCUMENT CONTAINS TECHNICAL DATA WHOSE EXPORT IS RESTRICTED BY THE ARMS EXPORT CONTROL ACT (TITLE 22, U.S.C. SEC. 2751 ET SEQ.) OR EXECUTIVE ORDER 12470. VIOLATIONS OF THESE EXPORT LAWS ARE SUBJECT TO SEVERE CRIMINAL PENALTIES.

DESTRUCTION NOTICE: DESTROY BY ANY METHOD THAT WILL PREVENT DISCLOSURE OF CONTENTS OR RECONSTRUCTION OF THE DOCUMENT.

APPLICATION	
NEXT ASSY	USED ON
8287569	8287500

6 5 4 3 2 1 – –
SHEET NUMBER
REVISION STATUS OF SHEETS

MATERIAL:
ITEM 1: STEEL PER ASTM A106 GR C
ITEM 2 & 3: STEEL PER ASTM A588 OR ASTM A572 GR 50

UNLESS OTHERWISE SPECIFIED:
ALL DIMENSIONS ARE IN INCHES
TOLERANCES: ANGLES± .5°
FRACTIONS± 3/32
DECIMALS
.XX± .02
.XXX± .005
BEND RADII
FILLETS & ROUNDS 250/
SURFACE FINISH √
BREAK ALL SHARP EDGES
INTERPRET DRAWING IN ACCORDANCE WITH STANDARDS PRESCRIBED IN ASME Y14.100
DO NOT SCALE THIS DRAWING

PORT HUENEME DIVISION
NAVAL SURFACE WARFARE CENTER
4363 MISSILE WAY
PORT HUENEME, CA 93043-4307

PREPARED	AMSEC	06-07
CHECKED		
TECH LEAD		
BR HD		
ACCEPTED BY NAVSEA	(SIGNATURE DOES NOT DENOTE APPROVAL)	
APPROVED FOR NAVSEA	(SIGN ONLY IF ENGINEERING HAS BEEN "APPROVED" BY MANUFACTURE AND TEST)	

DEPARTMENT OF THE NAVY
NAVAL SEA SYSTEMS COMMAND
WASHINGTON,D.C. 20376-5160

HEAVY UNREP-NAVY STANDARD
RAM TENSIONER

RAM WELDMENT

SIZE	CAGE CODE	NAVSEA DWG. NO.	REV
F	53711	8287570	–

SCALE 1/4 | UNIT WT 6300.0 LBS | SHEET 1 OF 2

8287570

NSWC 4120/1A (REV. 03-92)

REVISIONS				
ZONE	LTR	DESCRIPTION	DATE	APPROVED

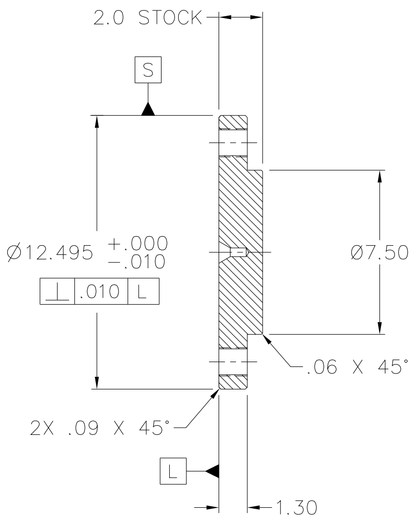

SECTION J–J

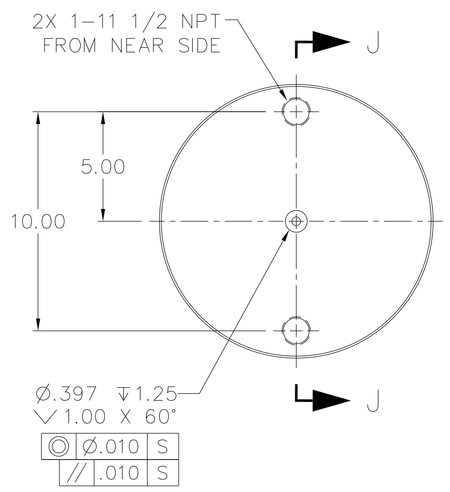

DETAIL OF PIECE 3

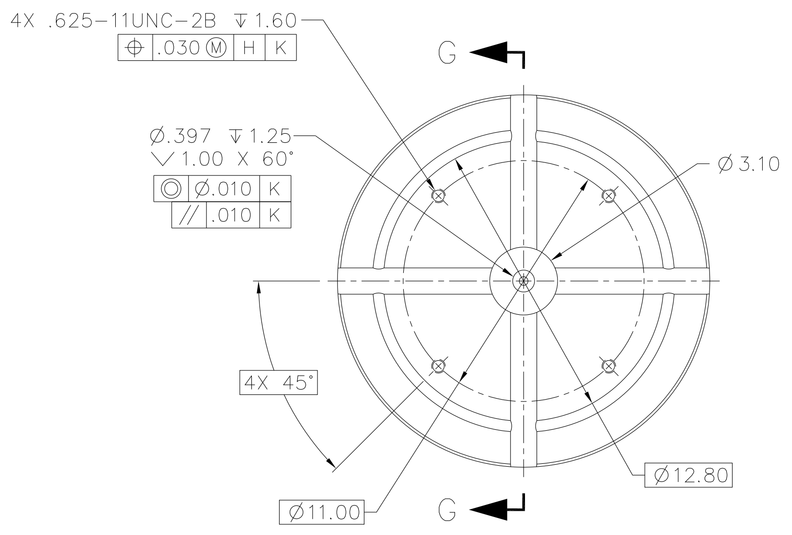

DETAIL OF PIECE 2

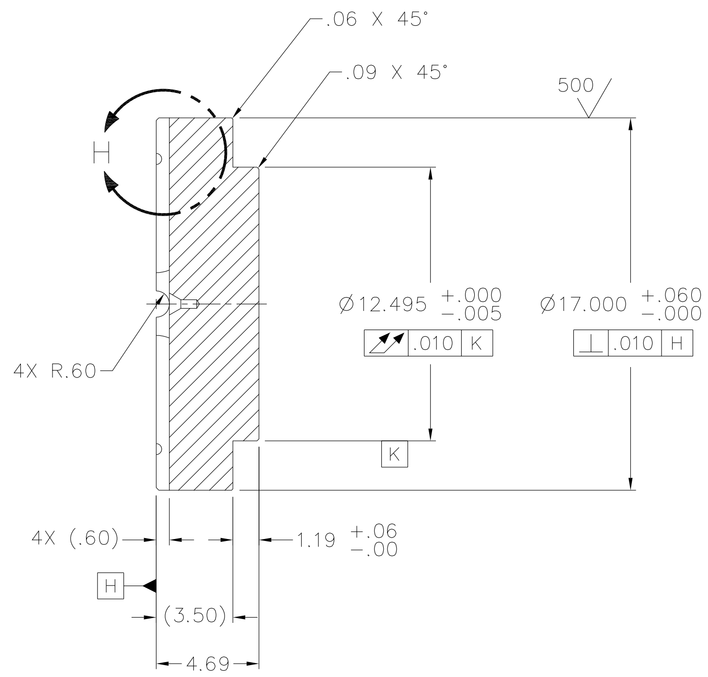

SECTION G–G

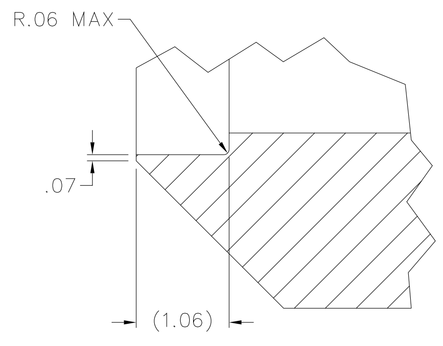

DETAIL F
SCALE: 1/1

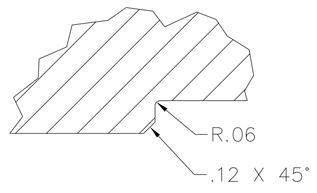

DETAIL E
SCALE: 1/1

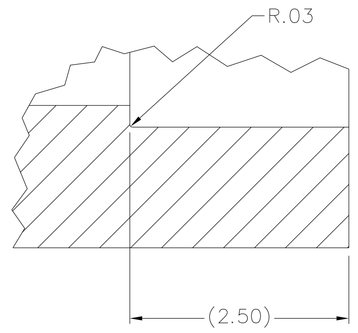

DETAIL D
SCALE: 1/1

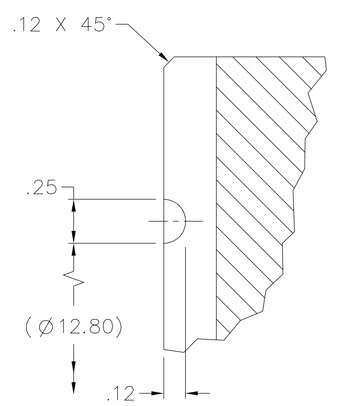

DETAIL H
SCALE: 2/1

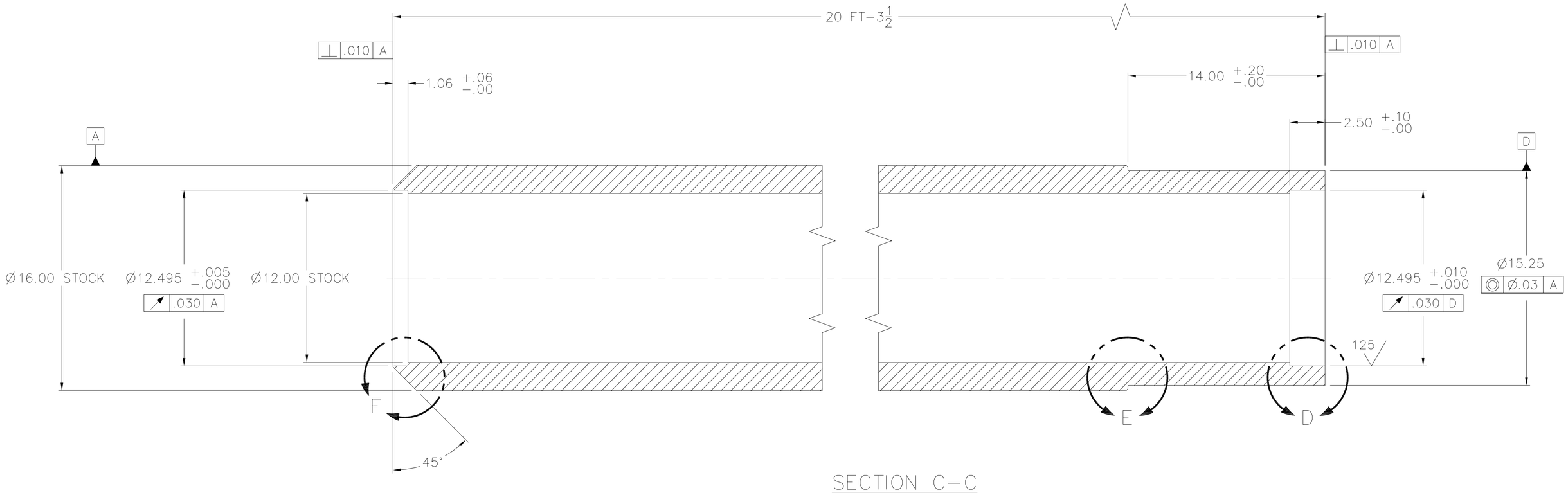

SECTION C–C
SCALE: 2/1

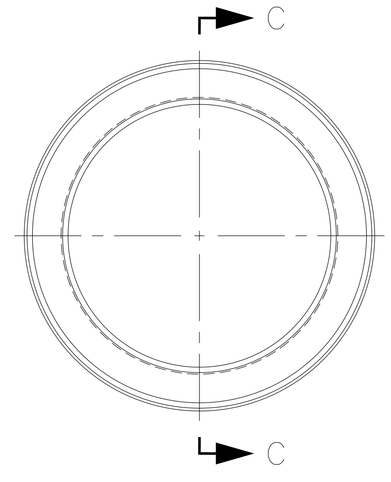

DETAIL OF PIECE 1

8287570

SIZE	CAGE CODE	NAVSEA DWG. NO.	REV
F	53711	8287570	–
SCALE 1/4	UNIT WT		SHEET 2

NSWC 4120/7A (REV. 03–92)

REVISIONS				
ZONE	LTR	DESCRIPTION	DATE	APPROVED

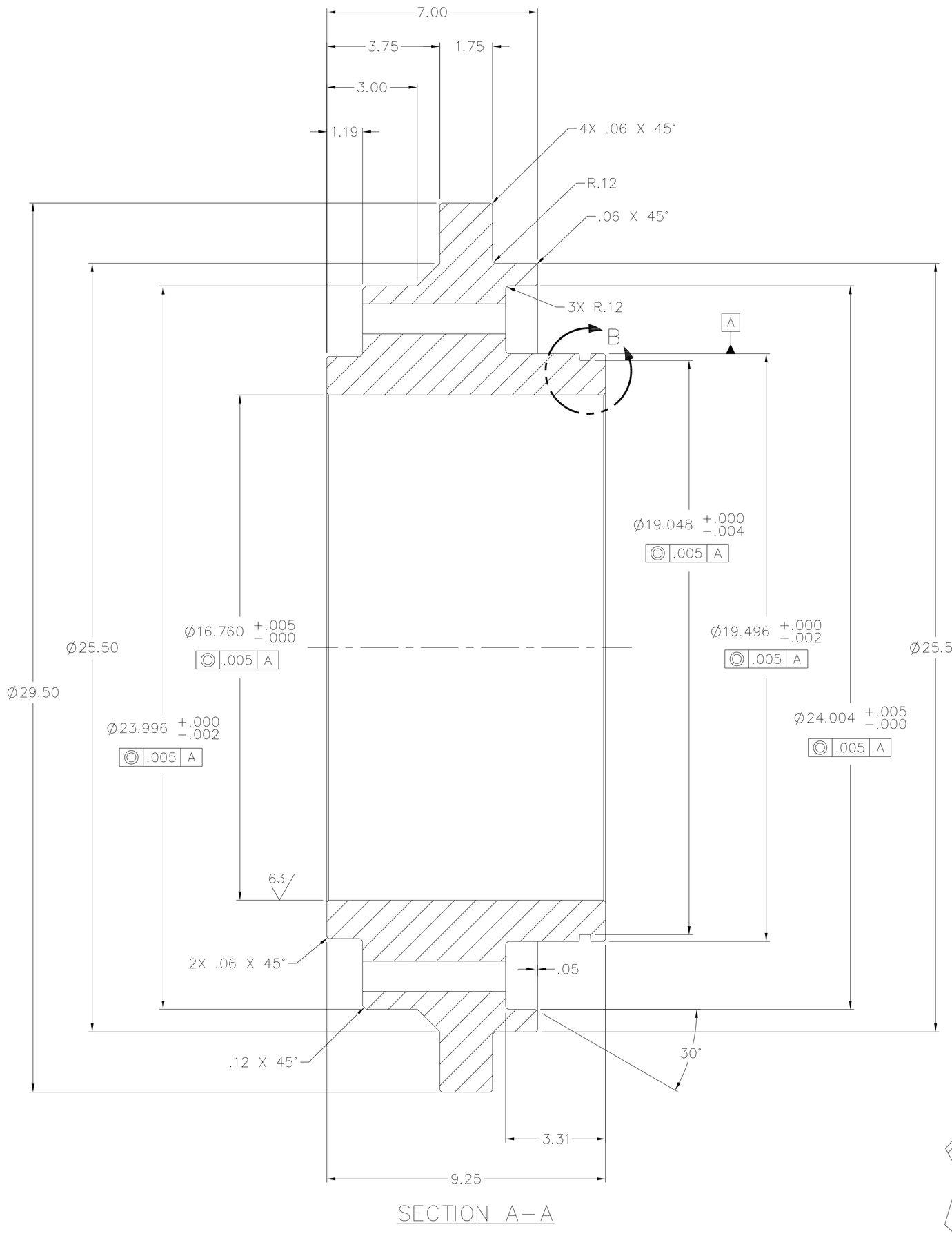

SECTION A–A

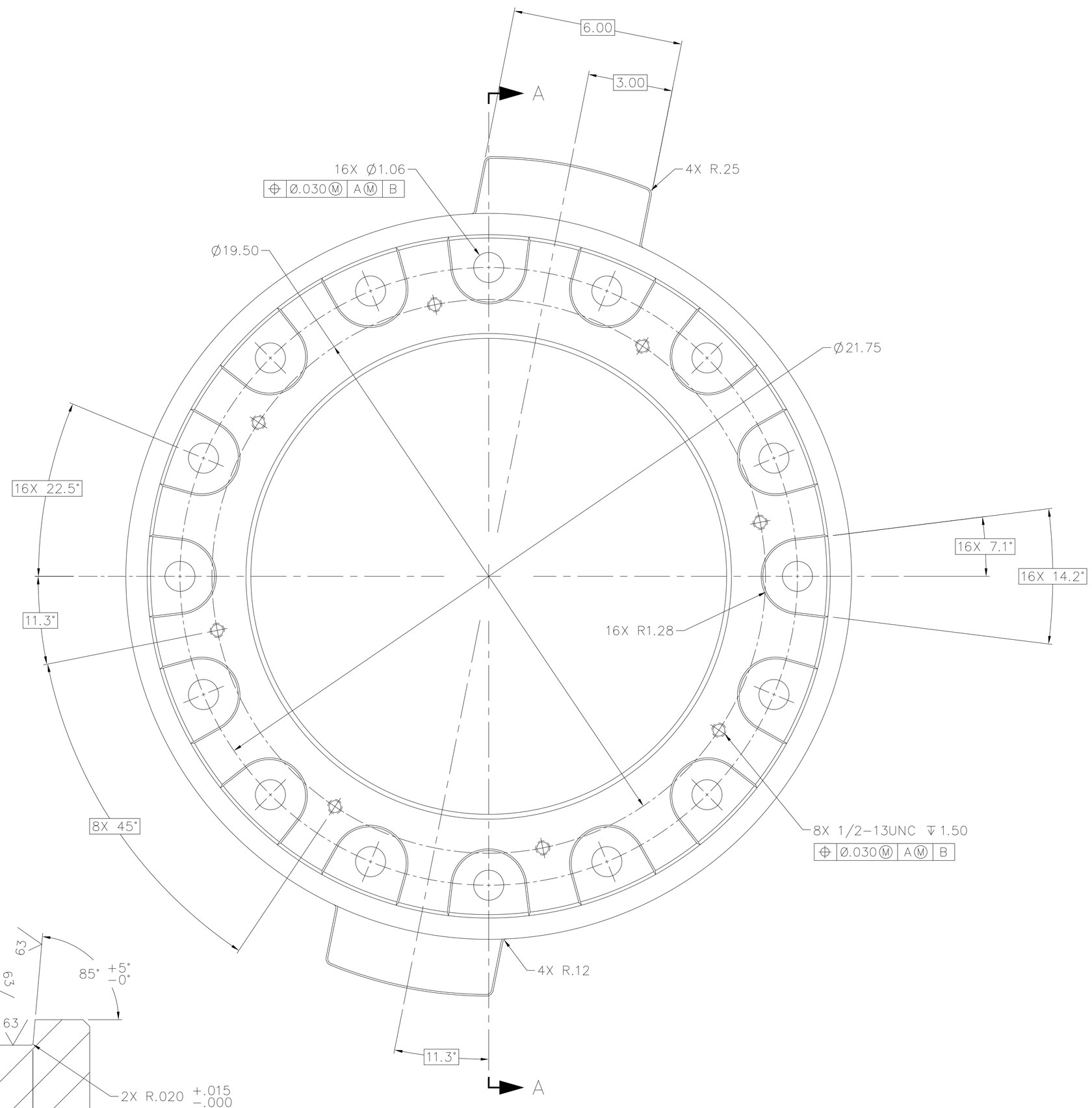

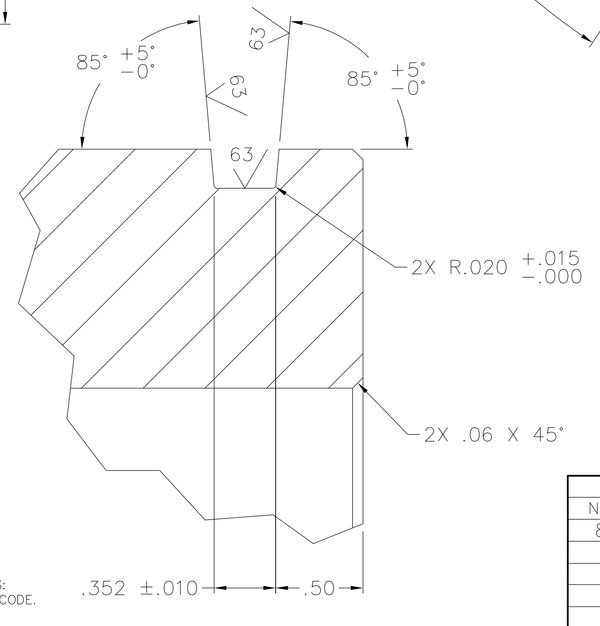

DETAIL B
SCALE: 2/1

NOTICE OF CONFIGURATION CONTROL

THIS DRAWING DEFINES AN ITEM OF UNDERWAY REPLENISHMENT (UNREP) STANDARD HARDWARE. NO REVISION TO THIS DRAWING OR THE HARDWARE REPRESENTED BY IT IS AUTHORIZED WITHOUT THE WRITTEN APPROVAL OF THE NAVAL SEA SYSTEMS COMMAND.

DISTRIBUTION STATEMENT C: DISTRIBUTION AUTHORIZED TO U.S. GOVERNMENT AGENCIES AND THEIR CONTRACTORS: OTHER REQUESTS MUST BE REFERRED TO COMNAVSEA OR THE COGNIZANT NAVSEA CODE.

WARNING: THIS DOCUMENT CONTAINS TECHNICAL DATA WHOSE EXPORT IS RESTRICTED BY THE ARMS EXPORT CONTROL ACT (TITLE 22, U.S.C. SEC. 2751 ET SEQ.) OR EXECUTIVE ORDER 12470. VIOLATIONS OF THESE EXPORT LAWS ARE SUBJECT TO SEVERE CRIMINAL PENALTIES.

DESTRUCTION NOTICE: DESTROY BY ANY METHOD THAT WILL PREVENT DISCLOSURE OF CONTENTS OR RECONSTRUCTION OF THE DOCUMENT.

PART OR IDENTIFYING NO.	QTY REQD	CODE IDENT NO.	DRAWING OR SPECIFICATION	NOMENCLATURE OR DESCRIPTION	REMARKS

PARTS LIST

APPLICATION	
NEXT ASSY	USED ON
8287501	8287500

MATERIAL:
STAINLESS STEEL TUBING
ASTM A106
GRADE B OR C

UNLESS OTHERWISE SPECIFIED:
ALL DIMENSIONS ARE IN INCHES
TOLERANCES: ANGLES± .5°
FRACTIONS± .02
DECIMALS
.XX± .02
.XXX±
BEND RADII
FILLETS & ROUNDS 250/
SURFACE FINISH
BREAK ALL SHARP EDGES

INTERPRET DRAWING IN ACCORDANCE WITH STANDARDS PRESCRIBED IN ASME Y14.100

DO NOT SCALE THIS DRAWING

PORT HUENEME DIVISION
NAVAL SURFACE WARFARE CENTER
4363 MISSILE WAY
PORT HUENEME, CA 93043–4307

PREPARED	AMSEC	06–07
CHECKED		
TECH LEAD		
BR HD		
ACCEPTED BY NAVSEA	(SIGNATURE DOES NOT DENOTE APPROVAL)	
APPROVED FOR NAVSEA	(SIGN ONLY IF ENGINEERING HAS BEEN "PROVED" BY MANUFACTURE AND TEST)	

DEPARTMENT OF THE NAVY
NAVAL SEA SYSTEMS COMMAND
WASHINGTON, D.C. 20376–5160

HEAVY UNREP–NAVY STANDARD
RAM TENSIONER

TENSIONER CYLINDER RETAINER

SIZE	CAGE CODE	NAVSEA DWG NO.	REV
F	53711	8287571	–

SCALE 1/2 | UNIT WT 220.2 LBS | SHEET 1 OF 1

8287503

NSWC 4120/1A (REV. 03–92)

NOTES:

1. DO NOT BREAK THROUGH WALL OR PRESSURE BOUNDARY WILL BE LOST. WALL BREAKTHROUGH SHALL BE CAUSE FOR PART REJECTION.

REVISIONS				
ZONE	LTR	DESCRIPTION	DATE	APPROVED

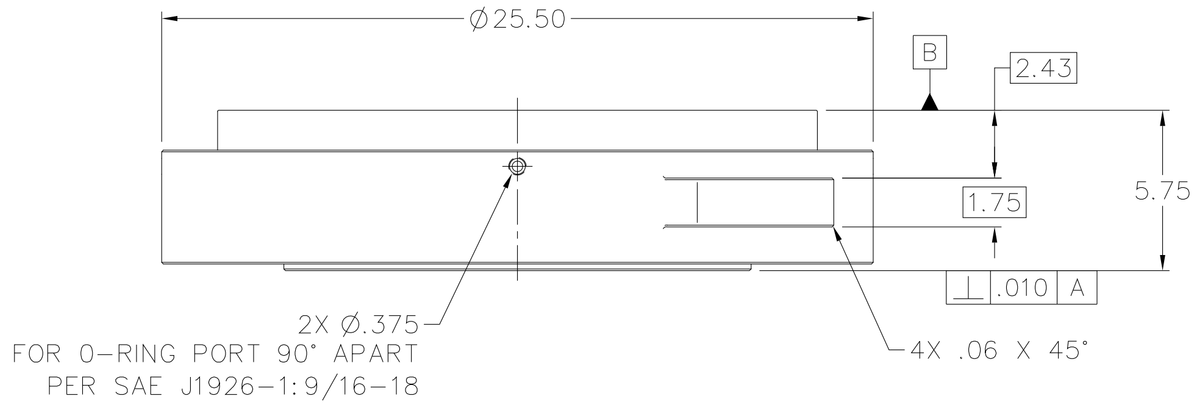

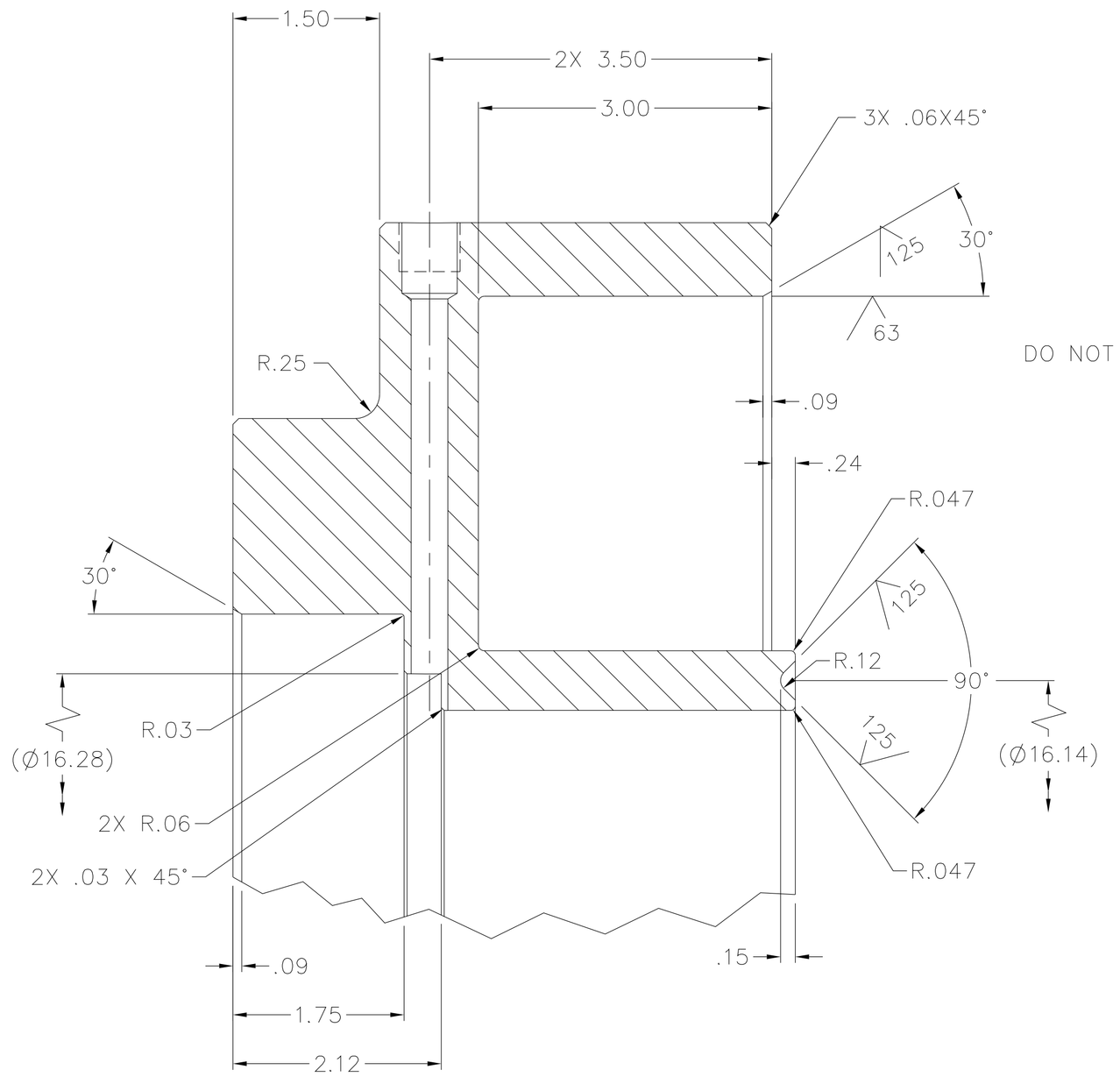

DETAIL B
SCALE: 1/1

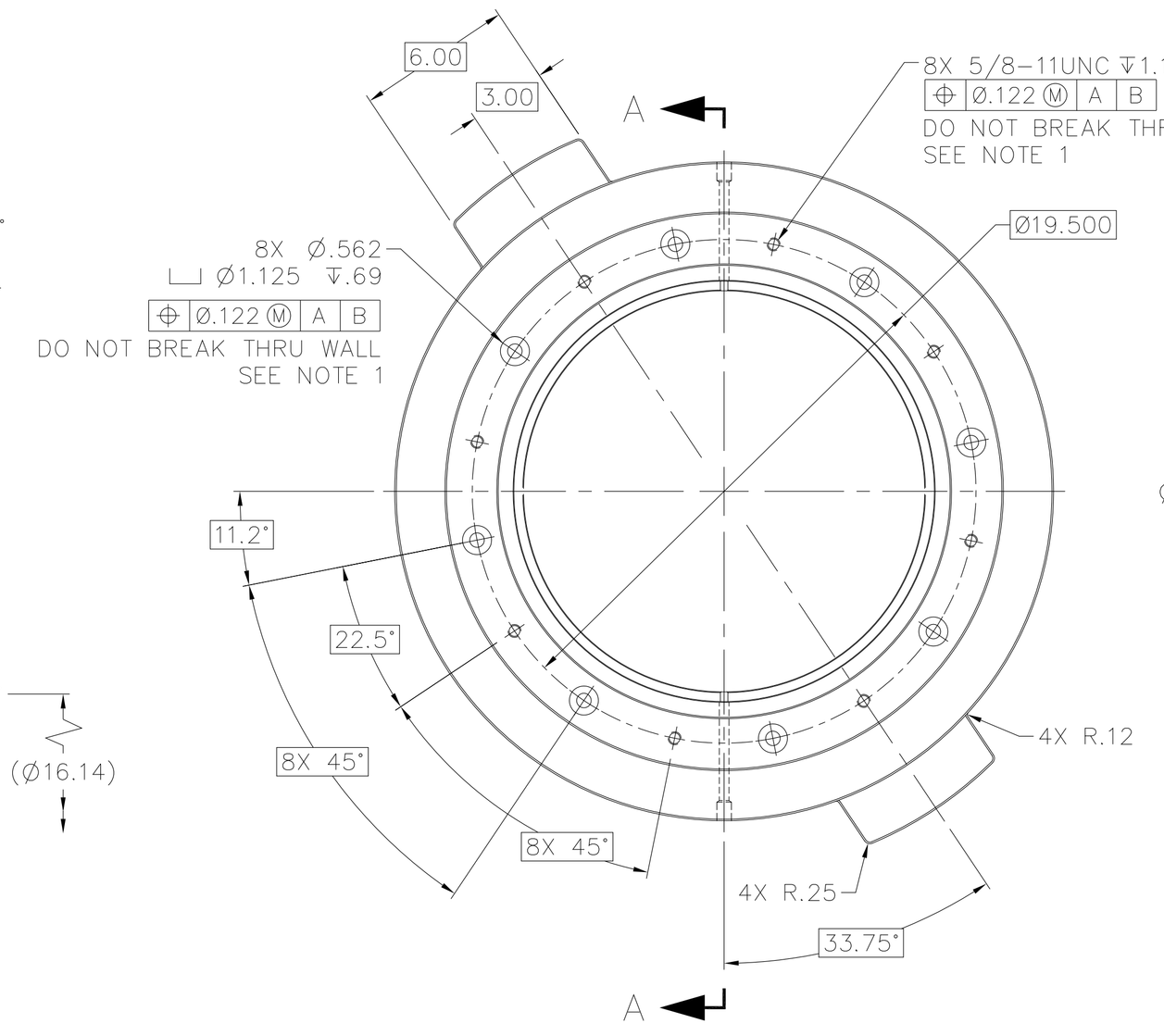

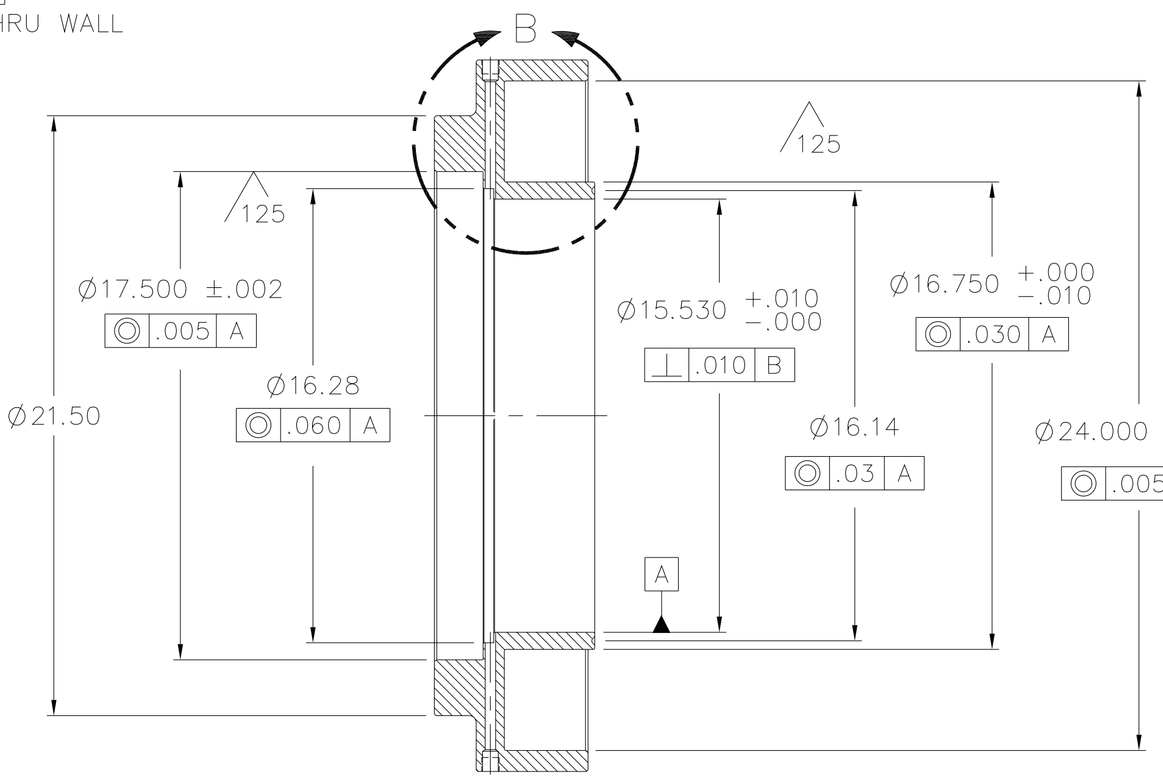

SECTION A-A

NOTICE OF CONFIGURATION CONTROL

THIS DRAWING DEFINES AN ITEM OF UNDERWAY REPLENISHMENT (UNREP) STANDARD HARDWARE. NO REVISION TO THIS DRAWING OR THE HARDWARE REPRESENTED BY IT IS AUTHORIZED WITHOUT THE WRITTEN APPROVAL OF THE NAVAL SEA SYSTEMS COMMAND.

DISTRIBUTION STATEMENT C: DISTRIBUTION AUTHORIZED TO U.S. GOVERNMENT AGENCIES AND THEIR CONTRACTORS: OTHER REQUESTS MUST BE REFERRED TO COMNAVSEA OR THE COGNIZANT NAVSEA CODE.

WARNING: THIS DOCUMENT CONTAINS TECHNICAL DATA WHOSE EXPORT IS RESTRICTED BY THE ARMS EXPORT CONTROL ACT (TITLE 22, U.S.C. SEC. 2751 ET SEQ.) OR EXECUTIVE ORDER 12470. VIOLATIONS OF THESE EXPORT LAWS ARE SUBJECT TO SEVERE CRIMINAL PENALTIES.

DESTRUCTION NOTICE: DESTROY BY ANY METHOD THAT WILL PREVENT DISCLOSURE OF CONTENTS OR RECONSTRUCTION OF THE DOCUMENT.

APPLICATION	
NEXT ASSY	USED ON
8287501	8287500

MATERIAL:

ALUMINUM BRONZE
PER ASTM B150
C63000
FORGED

UNLESS OTHERWISE SPECIFIED:
ALL DIMENSIONS ARE IN INCHES
TOLERANCES: ANGLES± .5°
FRACTIONS±
DECIMALS
.XX± .02
.XXX± .005
BEND RADII
FILLETS & ROUNDS 250/
SURFACE FINISH
BREAK ALL SHARP EDGES
INTERPRET DRAWING IN ACCORDANCE WITH STANDARDS PRESCRIBED IN ASME Y14.100
DO NOT SCALE THIS DRAWING

PORT HUENEME DIVISION
NAVAL SURFACE WARFARE CENTER
4363 MISSILE WAY
PORT HUENEME, CA 93043-4307

PREPARED	AMSEC	06-07
CHECKED		
TECH LEAD		
BR HD		
ACCEPTED BY NAVSEA	(SIGNATURE DOES NOT DENOTE APPROVAL)	
APPROVED FOR NAVSEA	(SIGN ONLY IF ENGINEERING HAS BEEN "PROVED" BY MANUFACTURE AND TEST)	

DEPARTMENT OF THE NAVY
NAVAL SEA SYSTEMS COMMAND
WASHINGTON, D.C. 20376-5160

HEAVY UNREP-NAVY STANDARD
RAM TENSIONER

WIPER RETAINER

SIZE	CAGE CODE	NAVSEA DWG NO.	REV
D	53711	8287572	—
SCALE 1/4 OR NOTED		UNIT WT 161.1 LBS	SHEET 1 OF 1

PART OR IDENTIFYING NO.	QTY REQD	CODE IDENT NO.	DRAWING OR SPECIFICATION	NOMENCLATURE OR DESCRIPTION	REMARKS

PARTS LIST

8287572

NSWC 4120/8 (REV 03-92)

REVISIONS				
ZONE	LTR	DESCRIPTION	DATE	APPROVED

SUGGESTED SOURCE(S) OF SUPPLY			
SUPPLIER/VENDOR DATA			
CODE IDENT	PART/DRAWING NUMBER	NAME & ADDRESS	APPLICATION
73680	11793-2845 (SPLIT)	GARLOCK SEALING TECHNOLOGIES 1666 DIVISION STREET PALMYRA, NY 14522 WEBSITE: WWW.GARLOCK.COM PHONE: (800) 448-6688 FAX: (800) 543-0598	HEAVY UNREP NAVY STANDARD RAM TENSIONER

NOTES:

1. IDENTIFICATION OF THE "SUGGESTED SOURCE(S) OF SUPPLY" HEREON IS NOT TO BE CONSTRUED AS A GUARANTEE OF PRESENT OR CONTINUED AVAILABILITY AS A SOURCE OF SUPPLY FOR THE ITEM DESCRIBED ON THE DRAWING.
2. THE SUGGESTED SOURCE(S) LISTED IS NOT INTENDED TO REPRESENT THE ONLY SOURCE(S) FOR THE ITEM(S).
3. MATERIAL SHALL BE FABRIC REINFORCED FLUOROELASTOMER, HIGH TENSILE FABRIC FRICTIONED WITH ELASTOMER, OR DUCK AND BUTYL, COMPATIBLE WITH PHOSPHATE ESTER HYDRAULIC FLUID MIL-H-19457 (REV C OR LATER).
4. EACH V-PACKING SET SHALL INCLUDE FIVE V-PACKING SEALS, 51.3 INCH REQUIRED MINIMUM LENGTH FOR EACH SEAL.
5. WORKING PRESSURE FOR THIS APPLICATION IS 2,050 PSI, MOTION IS LINEAR (VS ROTARY) AT 100 FPM MAXIMUM, 0-35 FPM NORMAL.

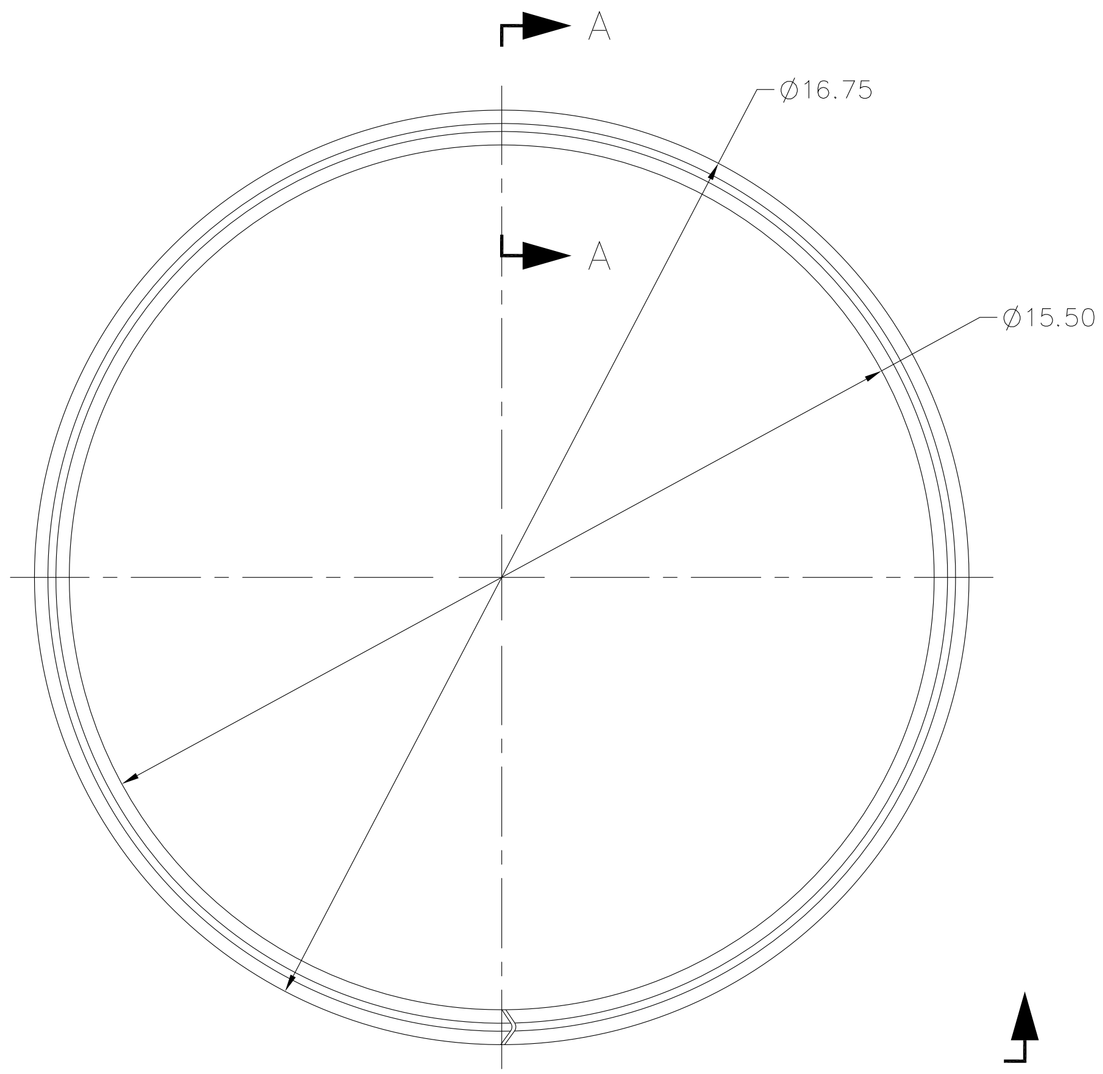

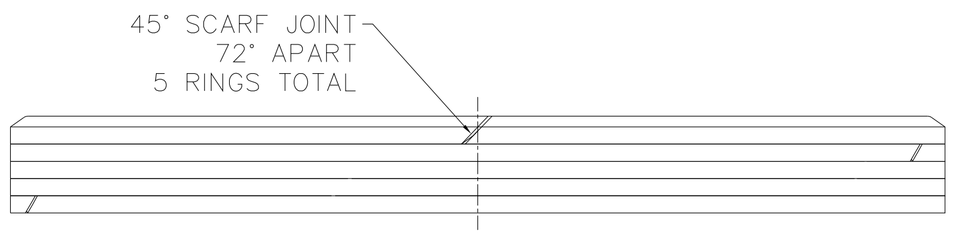

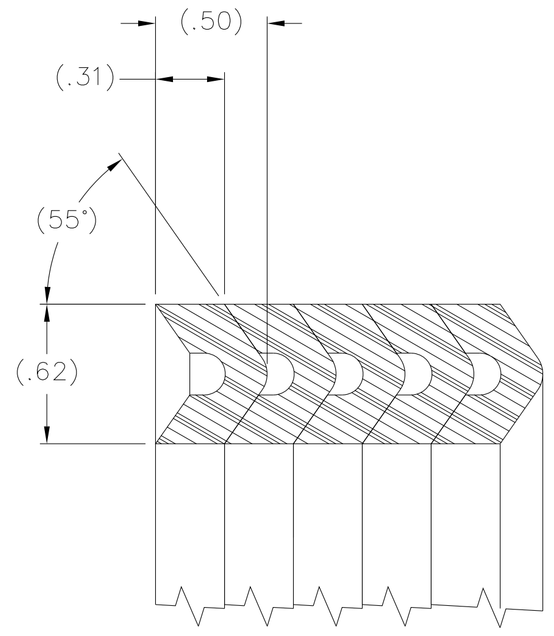

SECTION A-A
SCALE: 2/1

NOTICE OF CONFIGURATION CONTROL

THIS DRAWING DEFINES AN ITEM OF UNDERWAY REPLENISHMENT (UNREP) STANDARD HARDWARE. NO REVISION TO THIS DRAWING OR THE HARDWARE REPRESENTED BY IT IS AUTHORIZED WITHOUT THE WRITTEN APPROVAL OF THE NAVAL SEA SYSTEMS COMMAND.

DISTRIBUTION STATEMENT C: DISTRIBUTION AUTHORIZED TO U.S. GOVERNMENT AGENCIES AND THEIR CONTRACTORS; OTHER REQUESTS MUST BE REFERRED TO COMNAVSEA OR THE COGNIZANT NAVSEA CODE.

WARNING: THIS DOCUMENT CONTAINS TECHNICAL DATA WHOSE EXPORT IS RESTRICTED BY THE ARMS EXPORT CONTROL ACT (TITLE 22, U.S.C. SEC. 2751 ET SEQ.) OR EXECUTIVE ORDER 12470. VIOLATIONS OF THESE EXPORT LAWS ARE SUBJECT TO SEVERE CRIMINAL PENALTIES.

DESTRUCTION NOTICE: DESTROY BY ANY METHOD THAT WILL PREVENT DISCLOSURE OF CONTENTS OR RECONSTRUCTION OF THE DOCUMENT.

SPECIFICATION CONTROL DRAWING

PART OR IDENTIFYING NO.	QTY REQD	CODE IDENT NO.	DRAWING OR SPECIFICATION	NOMENCLATURE OR DESCRIPTION	REMARKS

PARTS LIST

APPLICATION	
NEXT ASSY	USED ON
8287501	8287500

MATERIAL: SEE NOTE 3

UNLESS OTHERWISE SPECIFIED:
ALL DIMENSIONS ARE IN INCHES
TOLERANCES: ANGLES± .5°
FRACTIONS±
DECIMALS
.XX± .03
.XXX±
BEND RADII
FILLETS & ROUNDS
SURFACE FINISH √
BREAK ALL SHARP EDGES
INTERPRET DRAWING IN ACCORDANCE WITH STANDARDS PRESCRIBED IN ASME Y14.100
DO NOT SCALE THIS DRAWING

PREPARED	AMSEC	06-07
CHECKED		
TECH LEAD		
BR HD		
ACCEPTED BY NAVSEA	(SIGNATURE DOES NOT DENOTE APPROVAL)	
APPROVED FOR NAVSEA	(SIGN ONLY IF ENGINEERING HAS BEEN "PROVED" BY MANUFACTURE AND TEST)	

PORT HUENEME DIVISION
NAVAL SURFACE WARFARE CENTER
4363 MISSILE WAY
PORT HUENEME, CA 93043-4307

DEPARTMENT OF THE NAVY
NAVAL SEA SYSTEMS COMMAND
WASHINGTON, D.C. 20376-5160

HEAVY UNREP-NAVY STANDARD RAM TENSIONER

V-PACKING SEAL SET

SIZE	CAGE CODE	NAVSEA DWG NO.	REV
D	53711	8287573	-

SCALE 1/2 | UNIT WT 2.5 LBS | SHEET 1 OF 1

8287573

NSWC 4120/8 (REV 03-92)

NOTES:

1. AFTER FABRICATION AND PRIOR TO NICKEL COATING, HEAT TREAT IN ACCORDANCE WITH SAE-AMS-H-6875, CLASS A, TO BHN 286-BHN 294 (138,000 – 141,000 PSI).

2. SHAFT SHALL BE ELECTROLESS NICKEL COATED PER SAE-AMS-C-26074, CLASS 2, GRADE A, .0005-.0015 THICK.

REVISIONS				
ZONE	LTR	DESCRIPTION	DATE	APPROVED

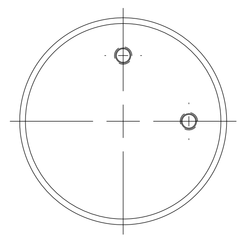

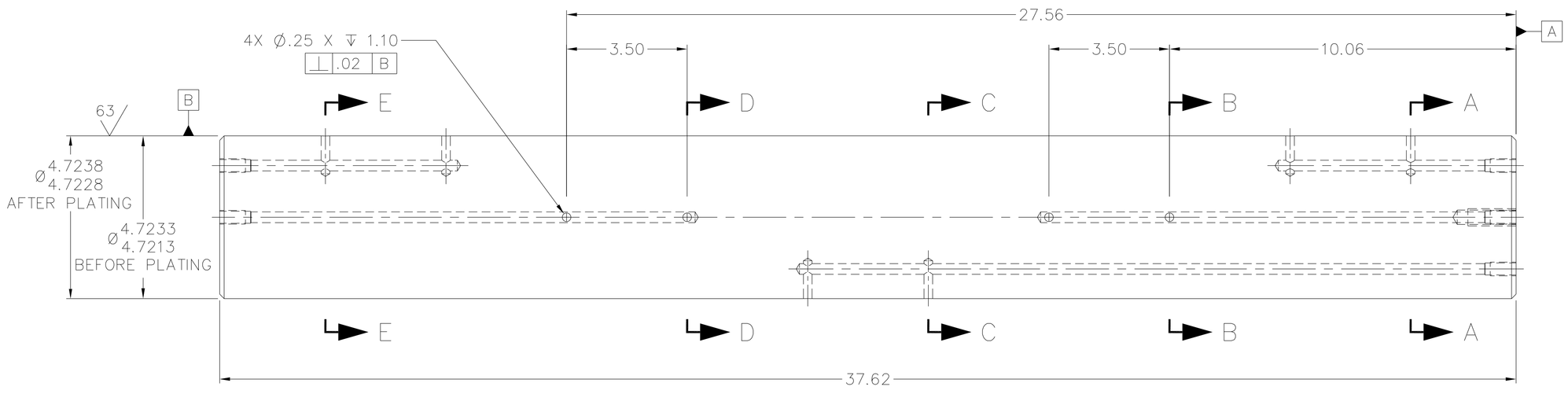

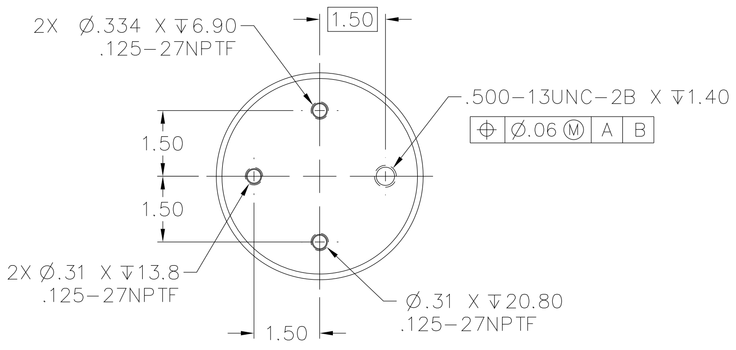

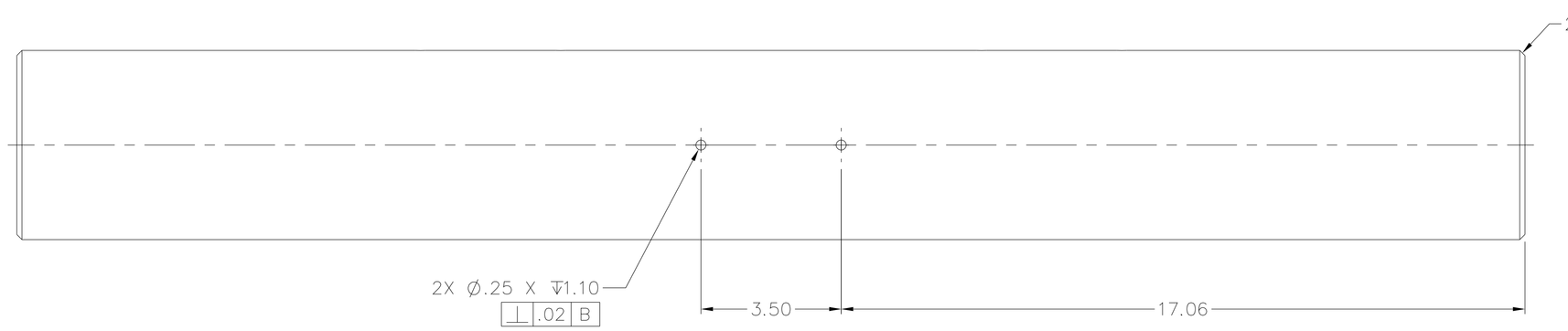

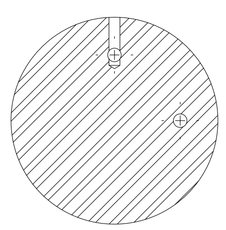

SECTION E-E

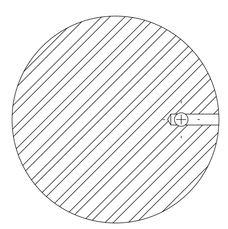

SECTION D-D

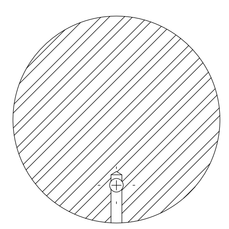

SECTION C-C

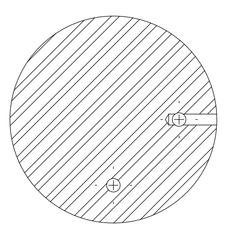

SECTION B-B

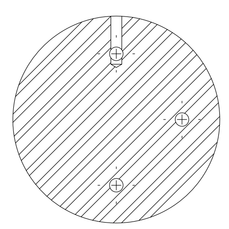

SECTION A-A

PART OR IDENTIFYING NO.	QTY REQD	CODE IDENT NO.	DRAWING OR SPECIFICATION	NOMENCLATURE OR DESCRIPTION	REMARKS

PARTS LIST

NOTICE OF CONFIGURATION CONTROL

THIS DRAWING DEFINES AN ITEM OF UNDERWAY REPLENISHMENT (UNREP) STANDARD HARDWARE. NO REVISION TO THIS DRAWING OR THE HARDWARE REPRESENTED BY IT IS AUTHORIZED WITHOUT THE WRITTEN APPROVAL OF THE NAVAL SEA SYSTEMS COMMAND.

DISTRIBUTION STATEMENT C: DISTRIBUTION AUTHORIZED TO U.S. GOVERNMENT AGENCIES AND THEIR CONTRACTORS: OTHER REQUESTS MUST BE REFERRED TO COMNAVSEA OR THE COGNIZANT NAVSEA CODE.

WARNING: THIS DOCUMENT CONTAINS TECHNICAL DATA WHOSE EXPORT IS RESTRICTED BY THE ARMS EXPORT CONTROL ACT (TITLE 22, U.S.C. SEC. 2751 ET SEQ.) OR EXECUTIVE ORDER 12470. VIOLATIONS OF THESE EXPORT LAWS ARE SUBJECT TO SEVERE CRIMINAL PENALTIES.

DESTRUCTION NOTICE: DESTROY BY ANY METHOD THAT WILL PREVENT DISCLOSURE OF CONTENTS OR RECONSTRUCTION OF THE DOCUMENT.

APPLICATION	
NEXT ASSY	USED ON
8287501	8287500

MATERIAL:
ALLOY STEEL
PER ASTM A322
UNS NO G41400

UNLESS OTHERWISE SPECIFIED:
ALL DIMENSIONS ARE IN INCHES
TOLERANCES: ANGLES± .5°
FRACTIONS±
DECIMALS
.XX± .02
.XXX±
BEND RADII
FILLETS & ROUNDS 125/
SURFACE FINISH √
BREAK ALL SHARP EDGES
INTERPRET DRAWING IN ACCORDANCE WITH STANDARDS PRESCRIBED IN ASME Y14.100
DO NOT SCALE THIS DRAWING

PORT HUENEME DIVISION
NAVAL SURFACE WARFARE CENTER
4363 MISSILE WAY
PORT HUENEME, CA 93043-4307

PREPARED	AMSEC	06-07
CHECKED		
TECH LEAD		
BR HD		
ACCEPTED BY NAVSEA	(SIGNATURE DOES NOT DENOTE APPROVAL)	
APPROVED FOR NAVSEA	(SIGN ONLY IF ENGINEERING HAS BEEN "PROVED" BY MANUFACTURE AND TEST)	

DEPARTMENT OF THE NAVY
NAVAL SEA SYSTEMS COMMAND
WASHINGTON,D.C. 20376-5160

HEAVY UNREP-NAVY STANDARD
RAM TENSIONER

LOWER SHEAVE SHAFT

SIZE	CAGE CODE	NAVSEA DWG. NO.	REV
F	53711	8287574	–

SCALE 1/2 | UNIT WT 186 LBS | SHEET 1 OF 1

8287574

NSWC 4120/1A (REV. 03-92)

REVISIONS				
ZONE	LTR	DESCRIPTION	DATE	APPROVED

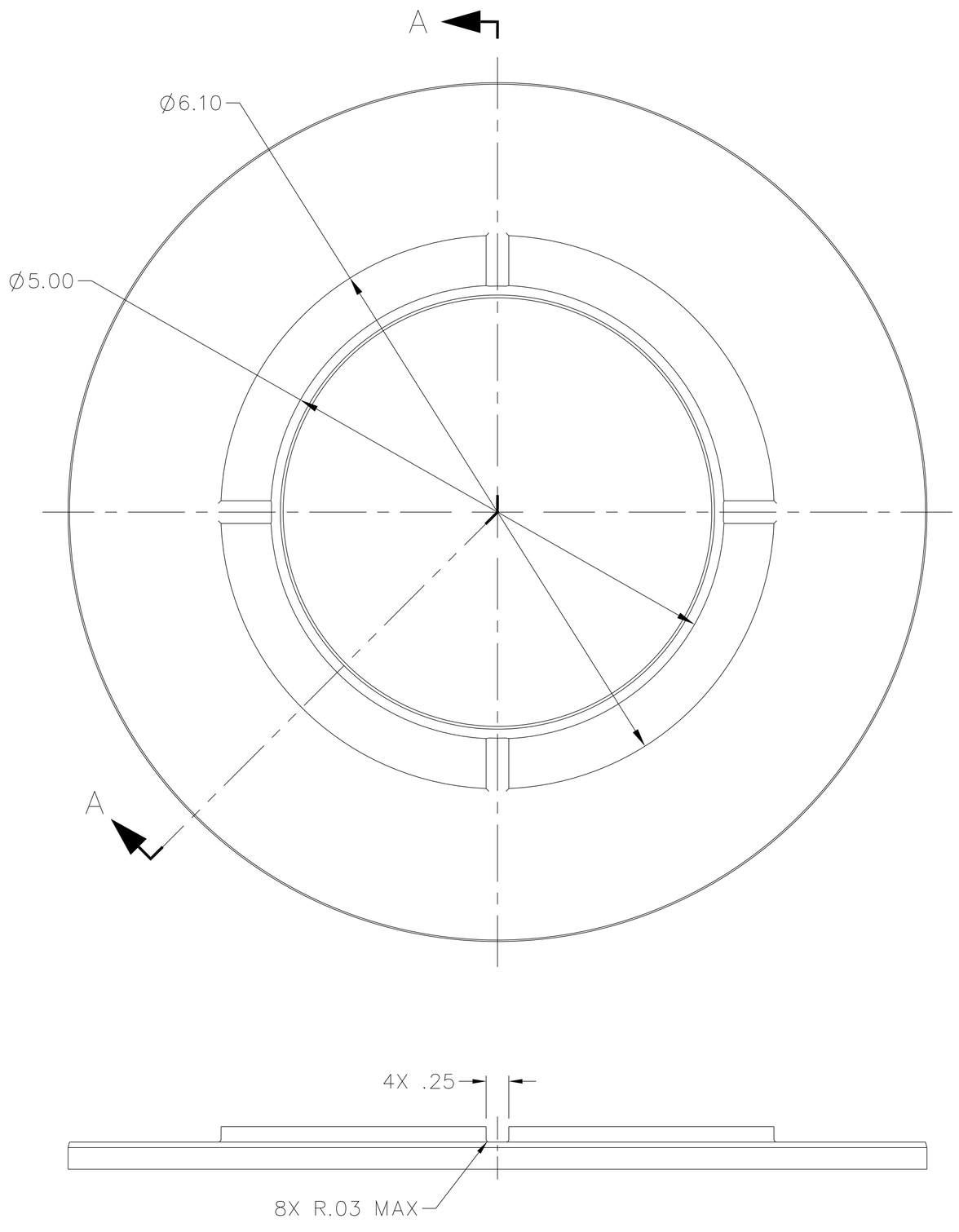

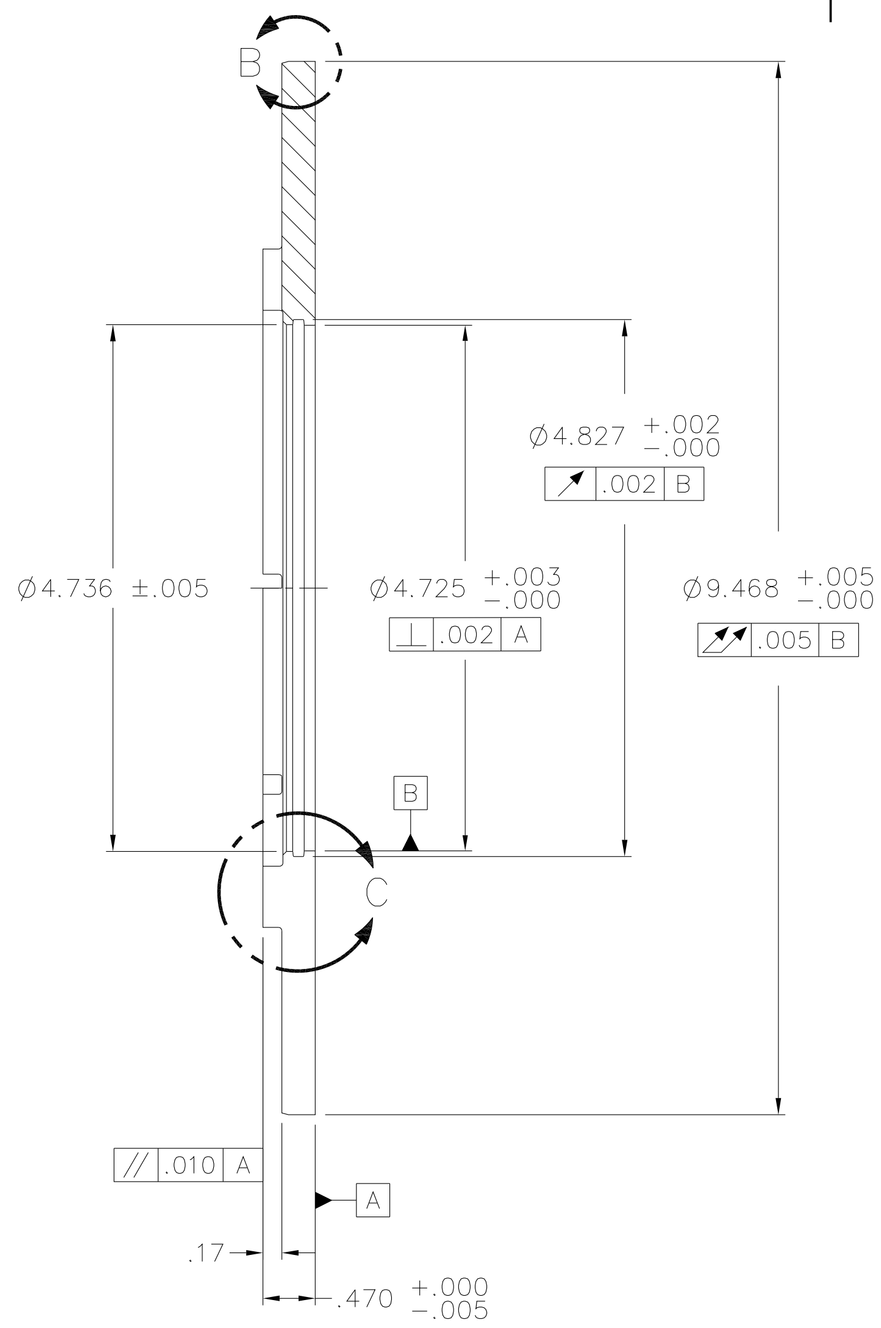

SECTION A–A

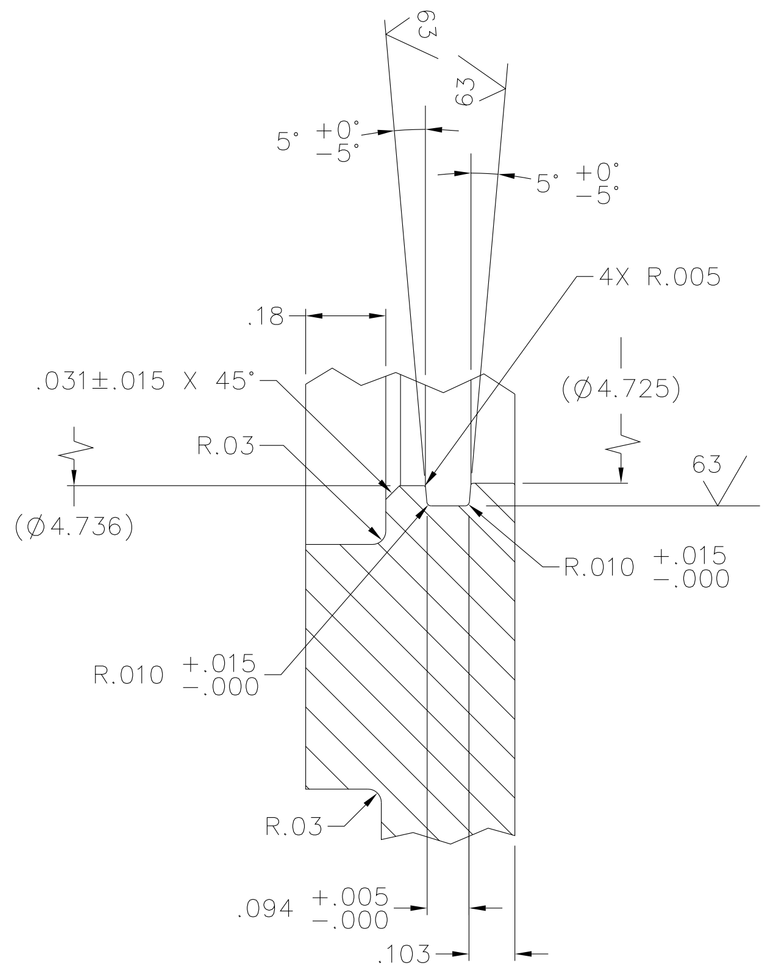

DETAIL C
SCALE: 4/1

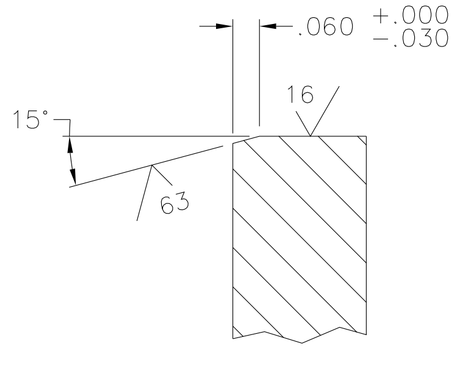

DETAIL B
SCALE: 4/1

NOTICE OF CONFIGURATION CONTROL

THIS DRAWING DEFINES AN ITEM OF UNDERWAY REPLENISHMENT (UNREP) STANDARD HARDWARE. NO REVISION TO THIS DRAWING OR THE HARDWARE REPRESENTED BY IT IS AUTHORIZED WITHOUT THE WRITTEN APPROVAL OF THE NAVAL SEA SYSTEMS COMMAND.

DISTRIBUTION STATEMENT C: DISTRIBUTION AUTHORIZED TO U.S. GOVERNMENT AGENCIES AND THEIR CONTRACTORS; OTHER REQUESTS MUST BE REFERRED TO COMNAVSEA OR THE COGNIZANT NAVSEA CODE.

WARNING: THIS DOCUMENT CONTAINS TECHNICAL DATA WHOSE EXPORT IS RESTRICTED BY THE ARMS EXPORT CONTROL ACT (TITLE 22, U.S.C. SEC. 2751 ET SEQ.) OR EXECUTIVE ORDER 12470. VIOLATIONS OF THESE EXPORT LAWS ARE SUBJECT TO SEVERE CRIMINAL PENALTIES.

DESTRUCTION NOTICE: DESTROY BY ANY METHOD THAT WILL PREVENT DISCLOSURE OF CONTENTS OR RECONSTRUCTION OF THE DOCUMENT.

APPLICATION	
NEXT ASSY	USED ON
8287501	8287500
8287503	

MATERIAL:
CRES
TY316
PER
ASTM A240

UNLESS OTHERWISE SPECIFIED:
ALL DIMENSIONS ARE IN INCHES
TOLERANCES: ANGLES± 5°
FRACTIONS±
DECIMALS
.XX± .02
.XXX±
BEND RADII
FILLETS & ROUNDS
SURFACE FINISH 125 √
BREAK ALL SHARP EDGES
INTERPRET DRAWING IN ACCORDANCE WITH STANDARDS PRESCRIBED IN ASME Y14.100
DO NOT SCALE THIS DRAWING

PART OR IDENTIFYING NO.	QTY REQD	CODE IDENT NO.	DRAWING OR SPECIFICATION	NOMENCLATURE OR DESCRIPTION	REMARKS

PARTS LIST

PORT HUENEME DIVISION
NAVAL SURFACE WARFARE CENTER
4363 MISSILE WAY
PORT HUENEME, CA 93043-4307

PREPARED	AMSEC	06-07
CHECKED		
TECH LEAD		
BR HD		
ACCEPTED BY NAVSEA		(SIGNATURE DOES NOT DENOTE APPROVAL)
APPROVED FOR NAVSEA		(SIGN ONLY IF ENGINEERING HAS BEEN "PROVED" BY MANUFACTURE AND TEST)

DEPARTMENT OF THE NAVY
NAVAL SEA SYSTEMS COMMAND
WASHINGTON, D.C. 20376-5160

HEAVY UNREP–NAVY STANDARD
RAM TENSIONER

BEARING SPACER

SIZE	CAGE CODE	NAVSEA DWG NO.	REV
D	53711	8287575	–

SCALE 1/1 OR NOTED | UNIT WT 5.0 LBS | SHEET 1 OF 1

8287575

NSWC 4120/8 (REV 03-92)

REVISIONS				
ZONE	LTR	DESCRIPTION	DATE	APPROVED

NOTES:

1. AFTER FABRICATION AND BEFORE PAINTING, PASSIVATE IN ACCORDANCE WITH ASTM A967. PASSIVATION TREATMENT SHALL BE DETERMINED USING ASTM A967, FIGURE X1.1.

2. PAINT ALL SURFACES FOR PROCEDURES AND MATERIALS SPECIFIED IN PC 1 USING SPECIAL PROCEDURES FOR RAM TENSIONER STAINLESS STEEL PARTS.

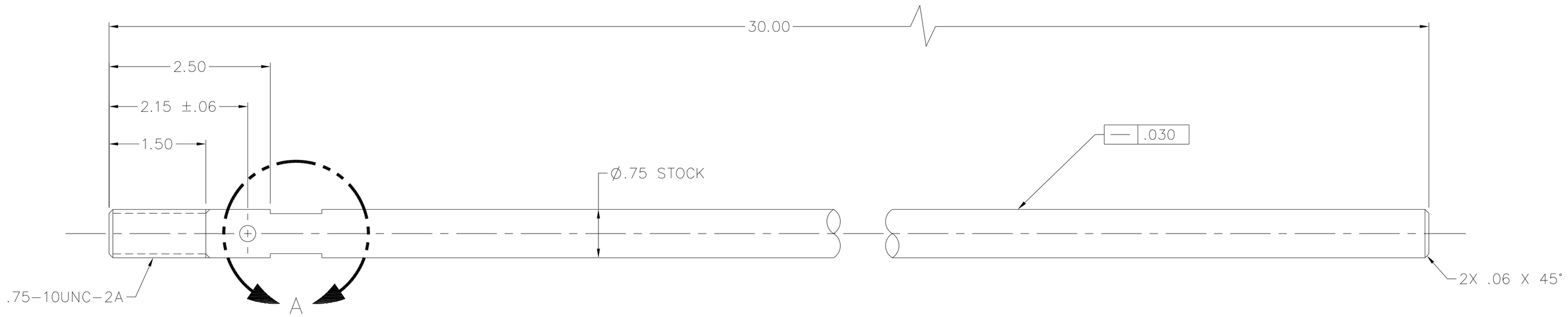

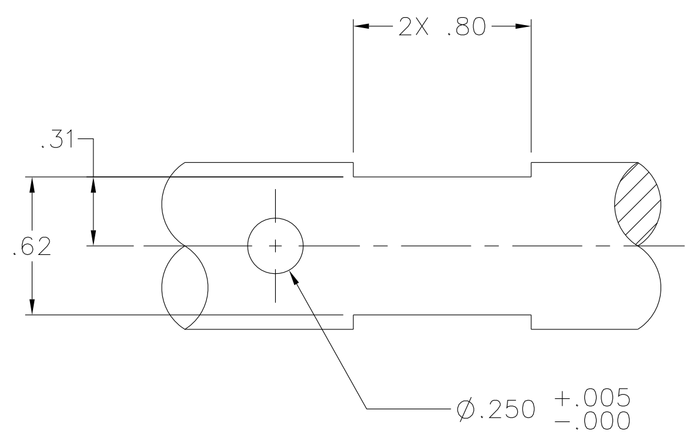

DETAIL A
SCALE: 2/1

NOTICE OF CONFIGURATION CONTROL

THIS DRAWING DEFINES AN ITEM OF UNDERWAY REPLENISHMENT (UNREP) STANDARD HARDWARE. NO REVISION TO THIS DRAWING OR THE HARDWARE REPRESENTED BY IT IS AUTHORIZED WITHOUT THE WRITTEN APPROVAL OF THE NAVAL SEA SYSTEMS COMMAND.

DISTRIBUTION STATEMENT C: DISTRIBUTION AUTHORIZED TO U.S. GOVERNMENT AGENCIES AND THEIR CONTRACTORS: OTHER REQUESTS MUST BE REFERRED TO COMNAVSEA OR THE COGNIZANT NAVSEA CODE.

WARNING: THIS DOCUMENT CONTAINS TECHNICAL DATA WHOSE EXPORT IS RESTRICTED BY THE ARMS EXPORT CONTROL ACT (TITLE 22, U.S.C. SEC. 2751 ET SEQ.) OR EXECUTIVE ORDER 12470. VIOLATIONS OF THESE EXPORT LAWS ARE SUBJECT TO SEVERE CRIMINAL PENALTIES.

DESTRUCTION NOTICE: DESTROY BY ANY METHOD THAT WILL PREVENT DISCLOSURE OF CONTENTS OR RECONSTRUCTION OF THE DOCUMENT.

PART OR IDENTIFYING NO.	QTY REQD	CODE IDENT NO.	DRAWING OR SPECIFICATION	NOMENCLATURE OR DESCRIPTION	REMARKS
1	AR	53711	5210545	STD PAINT PROCEDURE–UNREP	SEE NOTE 2

PARTS LIST

APPLICATION	
NEXT ASSY	USED ON
8287501	8287500

MATERIAL:
CRES ROUND BAR
TY 316
PER ASTM A276

UNLESS OTHERWISE SPECIFIED:
ALL DIMENSIONS ARE IN INCHES
TOLERANCES: ANGLES± .5°
FRACTIONS±
DECIMALS
.XX± .02
.XXX±
BEND RADII
FILLETS & ROUNDS
250/
SURFACE FINISH V
BREAK ALL SHARP EDGES
INTERPRET DRAWING IN ACCORDANCE WITH STANDARDS PRESCRIBED IN ASME Y14.100
DO NOT SCALE THIS DRAWING

PORT HUENEME DIVISION
NAVAL SURFACE WARFARE CENTER
4363 MISSILE WAY
PORT HUENEME, CA 93043–4307

PREPARED	AMSEC	06–07
CHECKED		
TECH LEAD		
BR HD		
ACCEPTED BY NAVSEA	(SIGNATURE DOES NOT DENOTE APPROVAL)	
APPROVED FOR NAVSEA	(SIGN ONLY IF ENGINEERING HAS BEEN "PROVED" BY MANUFACTURE AND TEST)	

DEPARTMENT OF THE NAVY
NAVAL SEA SYSTEMS COMMAND
WASHINGTON, D.C. 20376–5160

HEAVY UNREP–NAVY STANDARD
RAM TENSIONER

WIRE ROPE RETAINER ROD

SIZE	CAGE CODE	NAVSEA DWG NO.	REV
D	53711	8287576	–

SCALE 1/1 OR NOTED | UNIT WT 3.8 LBS | SHEET 1 OF 1

8287576

NSWC 4120/8 (REV 03–92)

NOTES:

1. PAINT ALL SURFACES USING PROCEDURES AND MATERIALS SPECIFIED IN PC 1 USING SPECIAL PROCEDURE FOR RAM TENSIONERS.

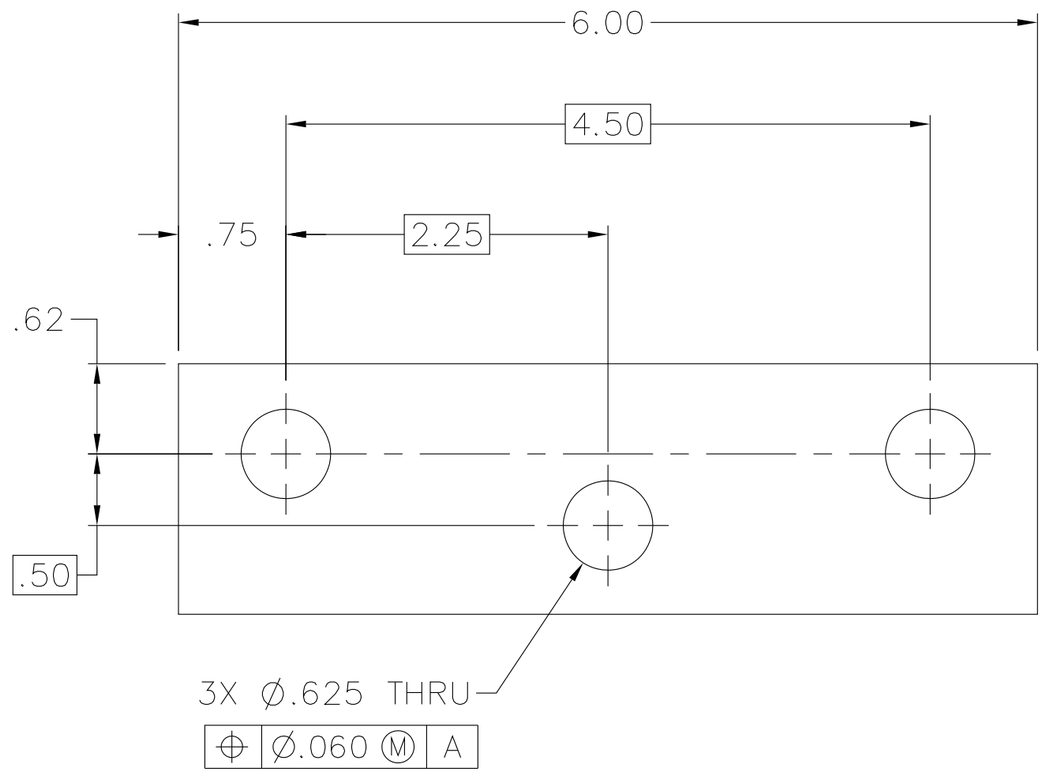

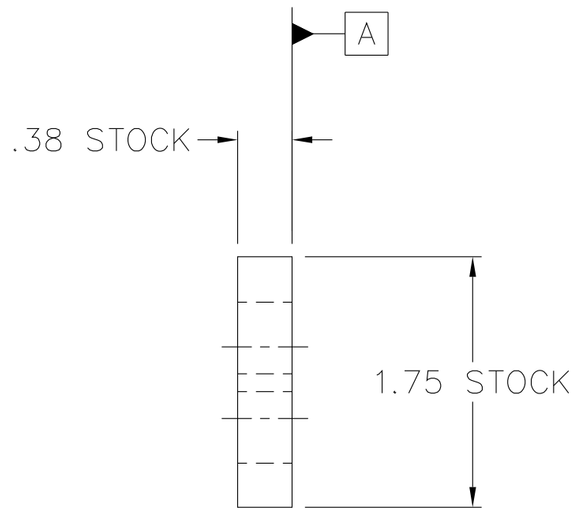

REVISIONS				
ZONE	LTR	DESCRIPTION	DATE	APPROVED

PART OR IDENTIFYING NO.	QTY REQD	CODE IDENT NO.	DRAWING OR SPECIFICATION	NOMENCLATURE OR DESCRIPTION	REMARKS
1	AR	53711	5210545	STD PAINT PROCEDURE–UNREP	SEE NOTE 1

PARTS LIST

DISTRIBUTION STATEMENT C: DISTRIBUTION AUTHORIZED TO U.S. GOVERNMENT AGENCIES AND THEIR CONTRACTORS; OTHER REQUESTS MUST BE REFERRED TO COMNAVSEA OR THE COGNIZANT NAVSEA CODE.

WARNING: THIS DOCUMENT CONTAINS TECHNICAL DATA WHOSE EXPORT IS RESTRICTED BY THE ARMS EXPORT CONTROL ACT (TITLE 22, U.S.C. SEC. 2751 ET SEQ.) OR EXECUTIVE ORDER 12470. VIOLATIONS OF THESE EXPORT LAWS ARE SUBJECT TO SEVERE CRIMINAL PENALTIES.

DESTRUCTION NOTICE: DESTROY BY ANY METHOD THAT WILL PREVENT DISCLOSURE OF CONTENTS OR RECONSTRUCTION OF THE DOCUMENT.

NOTICE OF CONFIGURATION CONTROL

THIS DRAWING DEFINES AN ITEM OF UNDERWAY REPLENISHMENT (UNREP) STANDARD HARDWARE. NO REVISION TO THIS DRAWING OR THE HARDWARE REPRESENTED BY IT IS AUTHORIZED WITHOUT THE WRITTEN APPROVAL OF THE NAVAL SEA SYSTEMS COMMAND.

APPLICATION	
NEXT ASSY	USED ON
8287501	8287500
8287503	

MATERIAL:

STEEL
PER ASTM A36
OR
LOW ALLOY HIGH STRENGTH STEEL
PER ASTM A572
GRADE 50
OR ASTM A588
GRADE B

UNLESS OTHERWISE SPECIFIED:
ALL DIMENSIONS ARE IN INCHES
TOLERANCES: ANGLES± .5°
FRACTIONS±
DECIMALS
.XX± .02
.XXX± .005
BEND RADII
FILLETS & ROUNDS 250/
SURFACE FINISH √
BREAK ALL SHARP EDGES

INTERPRET DRAWING IN ACCORDANCE WITH STANDARDS PRESCRIBED IN ASME Y14.100

DO NOT SCALE THIS DRAWING

PORT HUENEME DIVISION
NAVAL SURFACE WARFARE CENTER
4363 MISSILE WAY
PORT HUENEME, CA 93043-4307

PREPARED	AMSEC	06-07
CHECKED		
TECH LEAD		
BR HD		
ACCEPTED BY NAVSEA	(SIGNATURE DOES NOT DENOTE APPROVAL)	
APPROVED FOR NAVSEA	(SIGN ONLY IF ENGINEERING HAS BEEN "PROVED" BY MANUFACTURE AND TEST)	

DEPARTMENT OF THE NAVY
NAVAL SEA SYSTEMS COMMAND
WASHINGTON, D.C. 20376-5160

HEAVY UNREP–NAVY STANDARD
RAM TENSIONER

SHAFT KEEPER PLATE

SIZE	CAGE CODE	NAVSEA DWG NO.	REV
C	53711	8287577	–

SCALE 1/1 | UNIT WT 1.0 LBS | SHEET 1 OF 1

8287577 -T-

NSWC 4120/4 (REV. 03-92)

NOTES:

1. CARBURIZE ALL OVER TO A DEPTH OF .050–.065 INCH IN ACCORDANCE WITH SAE–AMS2759/7 AND HEAT TREAT PER SAE–AMS2759/7. HARDEN TO C50 MINIMUM TO AN EFFECTIVE CASE DEPTH OF .030 INCH.

REVISIONS

ZONE	LTR	DESCRIPTION	DATE	APPROVED

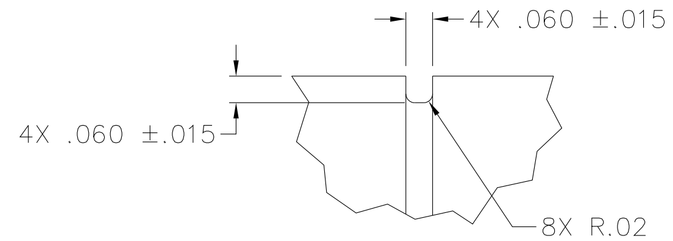

DETAIL B
SCALE: 4/1

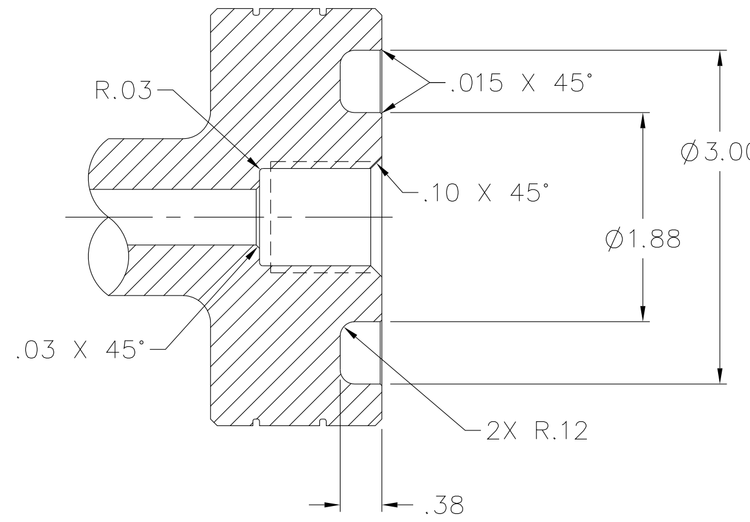

SECTION A–A

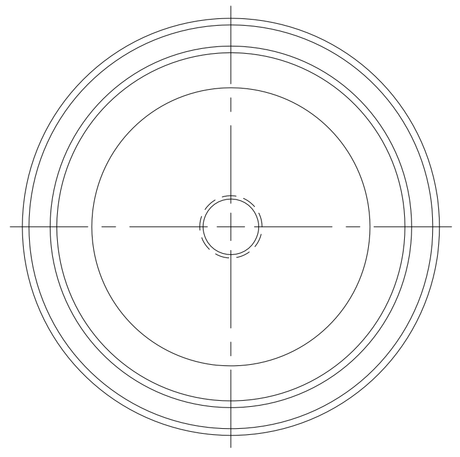

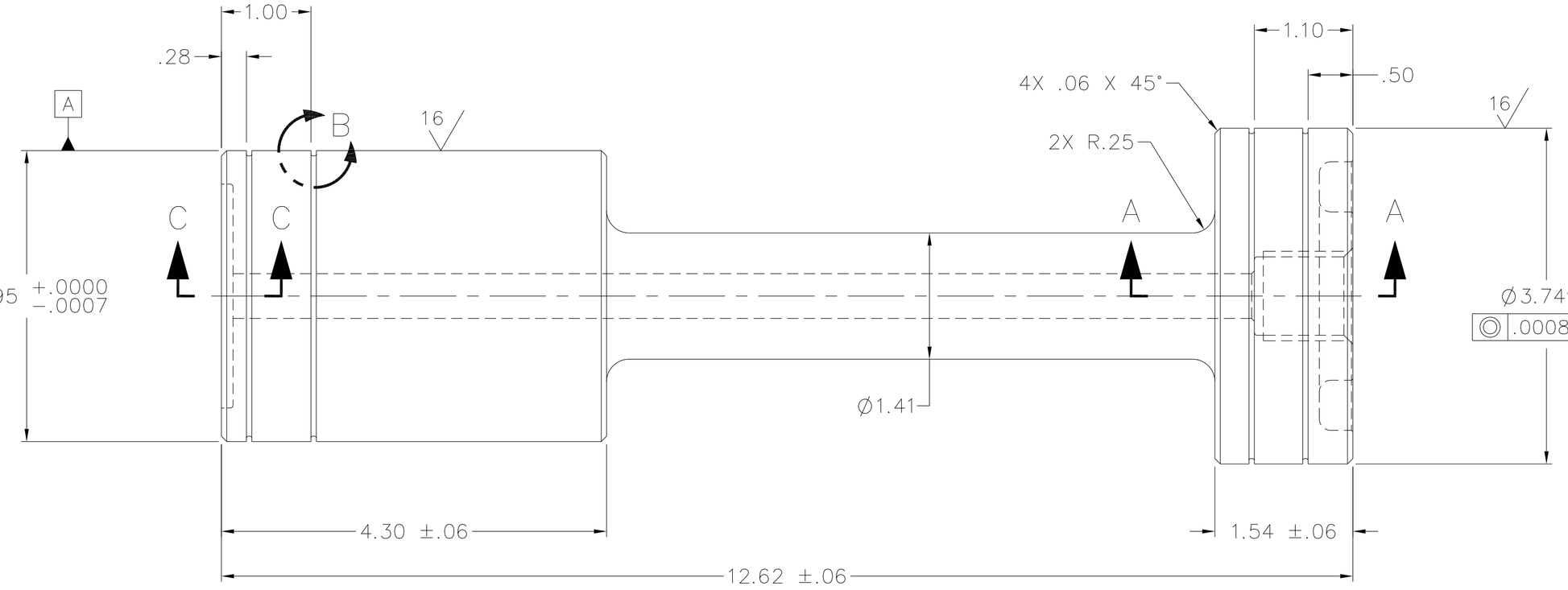

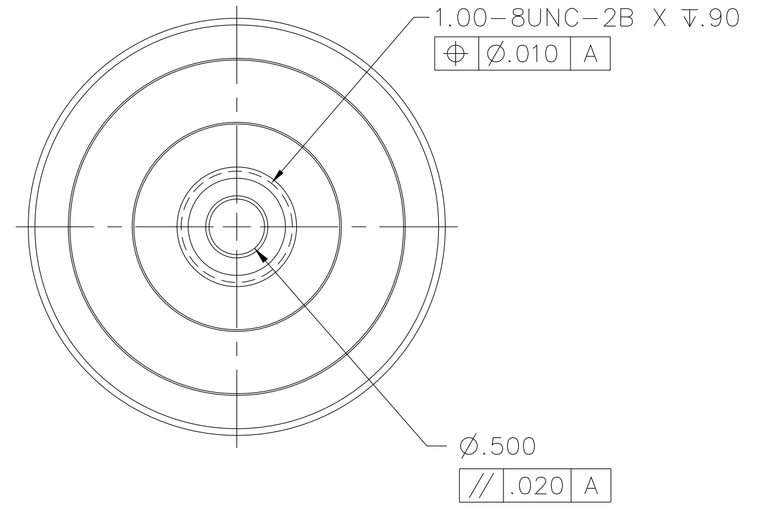

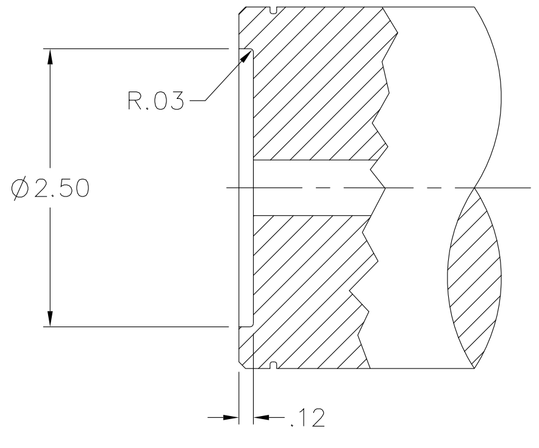

SECTION C–C

NOTICE OF CONFIGURATION CONTROL

THIS DRAWING DEFINES AN ITEM OF UNDERWAY REPLENISHMENT (UNREP) STANDARD HARDWARE. NO REVISION TO THIS DRAWING OR THE HARDWARE REPRESENTED BY IT IS AUTHORIZED WITHOUT THE WRITTEN APPROVAL OF THE NAVAL SEA SYSTEMS COMMAND.

DISTRIBUTION STATEMENT C: DISTRIBUTION AUTHORIZED TO U.S. GOVERNMENT AGENCIES AND THEIR CONTRACTORS; OTHER REQUESTS MUST BE REFERRED TO COMNAVSEA OR THE COGNIZANT NAVSEA CODE.

WARNING: THIS DOCUMENT CONTAINS TECHNICAL DATA WHOSE EXPORT IS RESTRICTED BY THE ARMS EXPORT CONTROL ACT (TITLE 22, U.S.C. SEC 2751 ET SEQ.) OR EXECUTIVE ORDER 12470. VIOLATIONS OF THESE EXPORT LAWS ARE SUBJECT TO SEVERE CRIMINAL PENALTIES.

DESTRUCTION NOTICE: DESTROY BY ANY METHOD THAT WILL PREVENT DISCLOSURE OF CONTENTS OR RECONSTRUCTION OF THE DOCUMENT.

APPLICATION	
NEXT ASSY	USED ON
8287501	8287500

MATERIAL:

STEEL
ASTM A576
UNS G10300

PART OR IDENTIFYING NO.	QTY REQD	CODE IDENT NO.	DRAWING OR SPECIFICATION	NOMENCLATURE OR DESCRIPTION	REMARKS

PARTS LIST

UNLESS OTHERWISE SPECIFIED:
ALL DIMENSIONS ARE IN INCHES
TOLERANCES: ANGLES± .5°
FRACTIONS±
DECIMALS
.XX± .02
.XXX± .005
BEND RADII
FILLETS & ROUNDS 125√
SURFACE FINISH
BREAK ALL SHARP EDGES

INTERPRET DRAWING IN ACCORDANCE WITH STANDARDS PRESCRIBED IN ASME Y14.100

DO NOT SCALE THIS DRAWING

PORT HUENEME DIVISION
NAVAL SURFACE WARFARE CENTER
4363 MISSILE WAY
PORT HUENEME, CA 93043–4307

PREPARED	AMSEC	06–07
CHECKED		
TECH LEAD		
BR HD		
ACCEPTED BY NAVSEA	(SIGNATURE DOES NOT DENOTE APPROVAL)	
APPROVED FOR NAVSEA	(SIGN ONLY IF ENGINEERING HAS BEEN "PROVED" BY MANUFACTURE AND TEST)	

DEPARTMENT OF THE NAVY
NAVAL SEA SYSTEMS COMMAND
WASHINGTON, D.C. 20376–5160

HEAVY UNREP–NAVY STANDARD
RAM TENSIONER

FLOW CONTROL VALVE PISTON

SIZE	CAGE CODE	NAVSEA DWG NO.	REV
D	53711	8287578	—

SCALE 1/1 OR NOTED | UNIT WT 16.7 LBS | SHEET 1 OF 1

8287578

NSWC 4120/8 (REV 03–92)

REVISIONS				
ZONE	LTR	DESCRIPTION	DATE	APPROVED

NOTES:

1. SPRING REQUIREMENTS:
   WIRE DIA .406 INCHES
   DIRECTION OF HELIX – OPTIONAL
   LOADS:
   750 LBS AT 3.88 INCHES GAGE LENGTH
   END CONDITION:
   SQUARED AND GROUND
   COIL DIA 2.906 +/– .001 INCHES OD
   FREE LENGTH: 10.00 INCHES

2. DESIGN INFORMATION:
   TOTAL COILS: 14.6
   ACTIVE COILS: 12.6

3. ENGINEERING REFERENCE INFORMATION:

   SPRING RATE: 190 LBS/IN.

   STRESS (UNCORRECTED) SOLID HEIGHT PLUS 1/32 INCH 71,300 PSI.

   SPRING SHALL TAKE ON NO PERMANENT SET WHEN COMPRESSED TO SOLID HEIGHT.

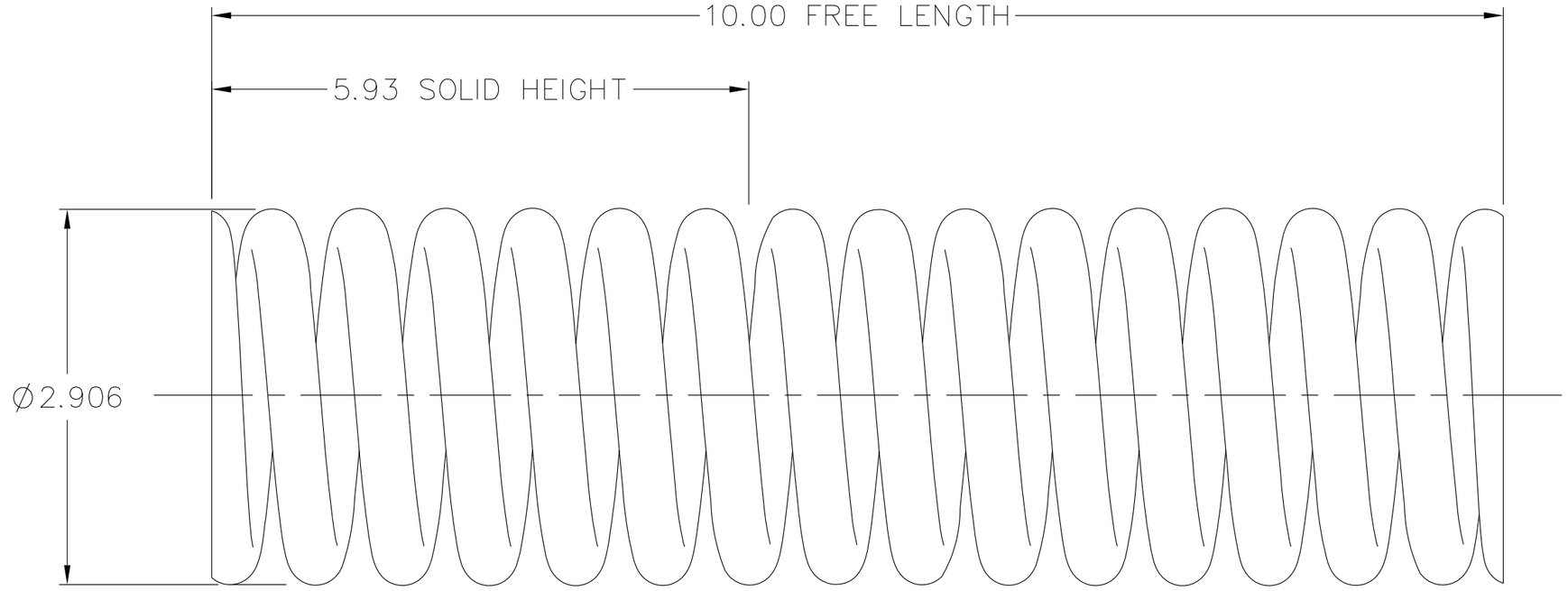

8287579

PART OR IDENTIFYING NO.	QTY REQD	CODE IDENT NO.	DRAWING OR SPECIFICATION	NOMENCLATURE OR DESCRIPTION	REMARKS

PARTS LIST

DISTRIBUTION STATEMENT C: DISTRIBUTION AUTHORIZED TO U.S. GOVERNMENT AGENCIES AND THEIR CONTRACTORS; OTHER REQUESTS MUST BE REFERRED TO COMNAVSEA OR THE COGNIZANT NAVSEA CODE.

WARNING: THIS DOCUMENT CONTAINS TECHNICAL DATA WHOSE EXPORT IS RESTRICTED BY THE ARMS EXPORT CONTROL ACT (TITLE 22, U.S.C. SEC. 2751 ET SEQ.) OR EXECUTIVE ORDER 12470. VIOLATIONS OF THESE EXPORT LAWS ARE SUBJECT TO SEVERE CRIMINAL PENALTIES.

DESTRUCTION NOTICE: DESTROY BY ANY METHOD THAT WILL PREVENT DISCLOSURE OF CONTENTS OR RECONSTRUCTION OF THE DOCUMENT.

NOTICE OF CONFIGURATION CONTROL

THIS DRAWING DEFINES AN ITEM OF UNDERWAY REPLENISHMENT (UNREP) STANDARD HARDWARE. NO REVISION TO THIS DRAWING OR THE HARDWARE REPRESENTED BY IT IS AUTHORIZED WITHOUT THE WRITTEN APPROVAL OF THE NAVAL SEA SYSTEMS COMMAND.

APPLICATION	
NEXT ASSY	USED ON
8287501	8287500

MATERIAL:

CHROME SILICON STEEL
PER ASTM A401

UNLESS OTHERWISE SPECIFIED:
ALL DIMENSIONS ARE IN INCHES
TOLERANCES: ANGLES± .5°
FRACTIONS±
DECIMALS
.XX± .02
.XXX±
BEND RADII
FILLETS & ROUNDS 250/
SURFACE FINISH √
BREAK ALL SHARP EDGES

INTERPRET DRAWING IN ACCORDANCE WITH STANDARDS PRESCRIBED IN ASME Y14.100

DO NOT SCALE THIS DRAWING

PORT HUENEME DIVISION
NAVAL SURFACE WARFARE CENTER
4363 MISSILE WAY
PORT HUENEME, CA 93043-4307

PREPARED	AMSEC	06-07
CHECKED		
TECH LEAD		
BR HD		
ACCEPTED BY NAVSEA	(SIGNATURE DOES NOT DENOTE APPROVAL)	
APPROVED FOR NAVSEA	(SIGN ONLY IF ENGINEERING HAS BEEN "PROVED" BY MANUFACTURE AND TEST)	

DEPARTMENT OF THE NAVY
NAVAL SEA SYSTEMS COMMAND
WASHINGTON, D.C. 20376-5160

HEAVY UNREP-NAVY STANDARD
RAM TENSIONER

SPRING

SIZE	CAGE CODE	NAVSEA DWG NO.	REV
C	53711	8287579	–

SCALE 1/1 | UNIT WT .50 LBS | SHEET 1 OF 1

NSWC 4120/4 (REV. 03-92)

NOTES:

1. CARBURIZE ALL OVER TO A DEPTH OF .050–.065 INCH IN ACCORDANCE WITH SAE–AMS2759/7 AND HEAT TREAT PER SAE–AMS2759/7, HARDEN TO C50 MINIMUM TO AN EFFECTIVE CASE DEPTH OF .030 INCH.

REVISIONS				
ZONE	LTR	DESCRIPTION	DATE	APPROVED

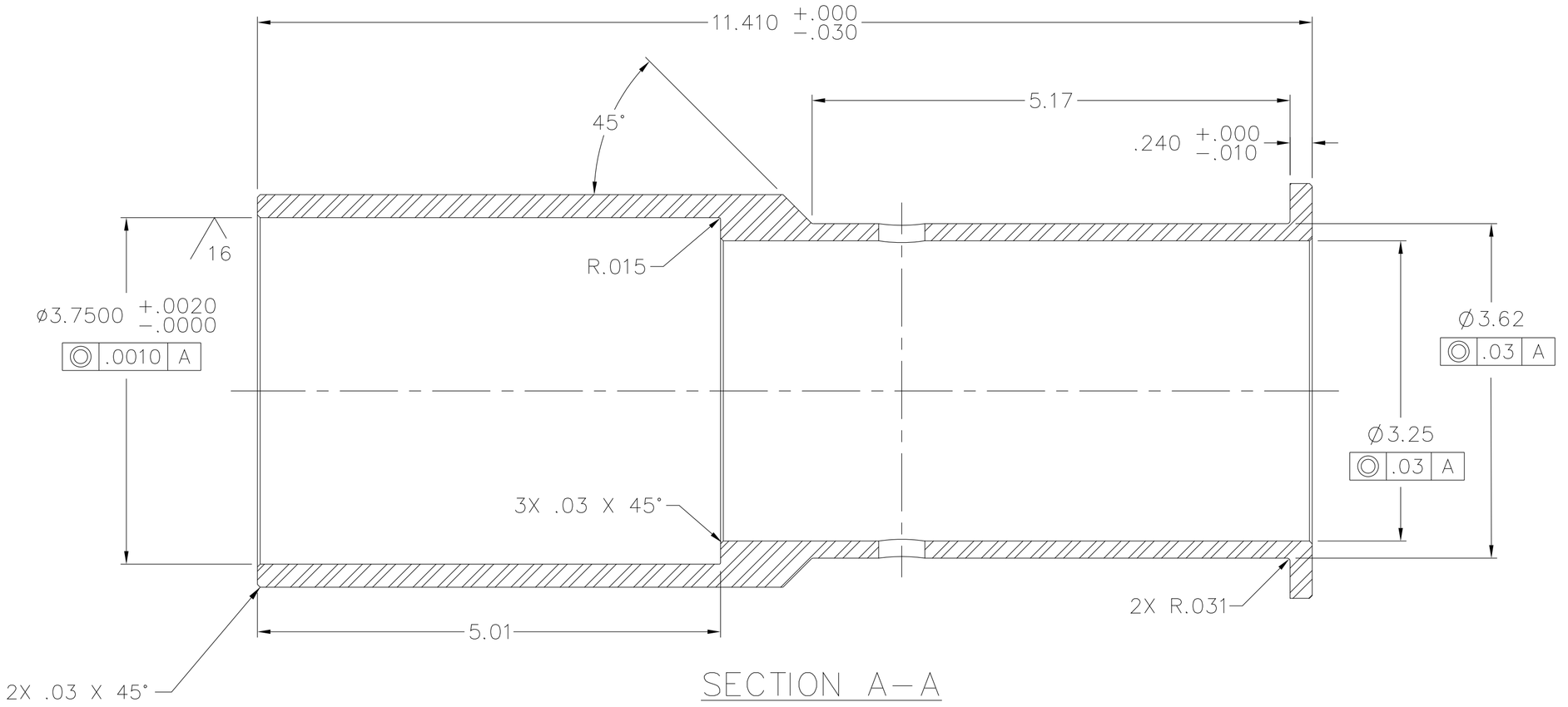

SECTION A–A

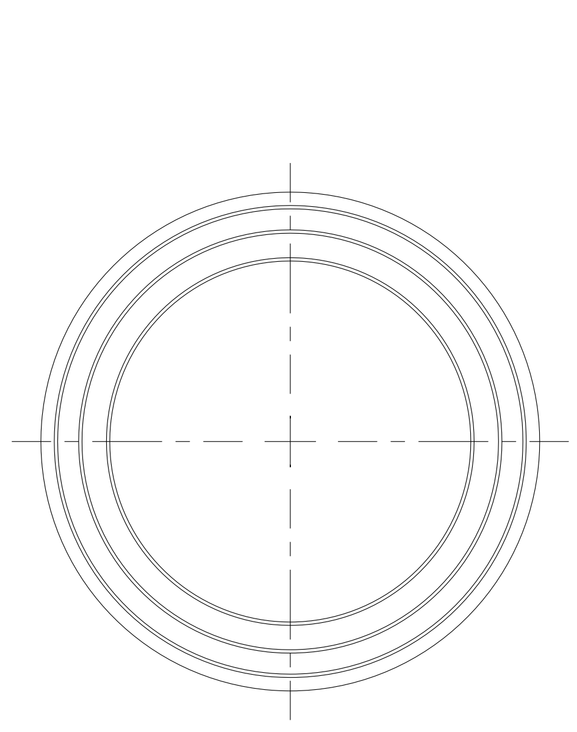

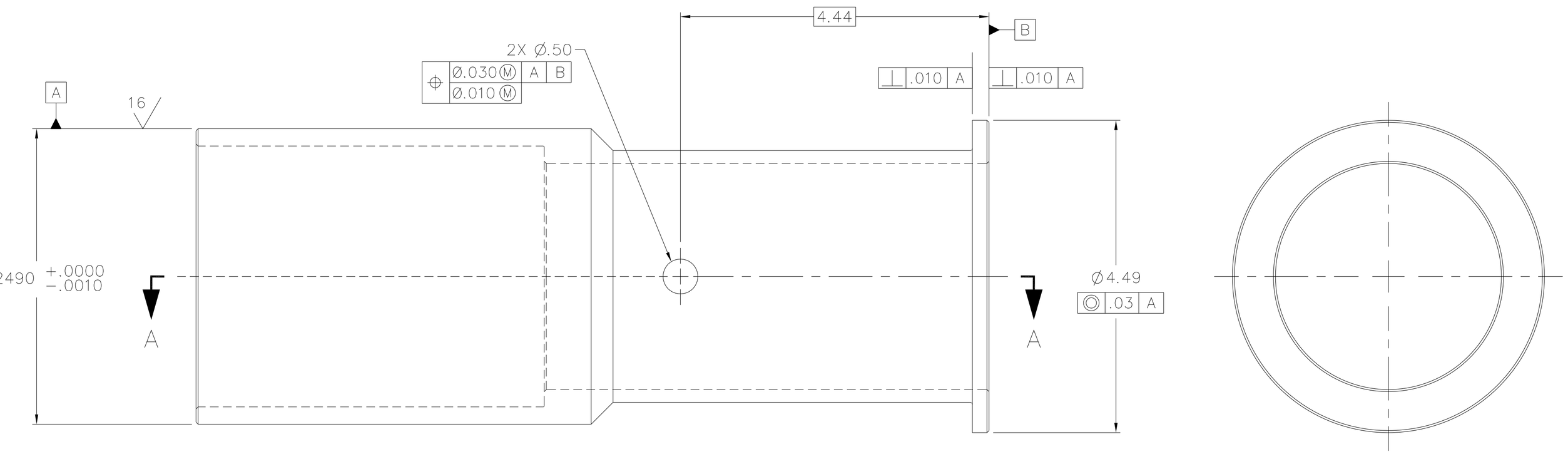

8287580

NOTICE OF CONFIGURATION CONTROL

THIS DRAWING DEFINES AN ITEM OF UNDERWAY REPLENISHMENT (UNREP) STANDARD HARDWARE. NO REVISION TO THIS DRAWING OR THE HARDWARE REPRESENTED BY IT IS AUTHORIZED WITHOUT THE WRITTEN APPROVAL OF THE NAVAL SEA SYSTEMS COMMAND.

DISTRIBUTION STATEMENT C: DISTRIBUTION AUTHORIZED TO U.S. GOVERNMENT AGENCIES AND THEIR CONTRACTORS: OTHER REQUESTS MUST BE REFERRED TO COMNAVSEA OR THE COGNIZANT NAVSEA CODE.

WARNING: THIS DOCUMENT CONTAINS TECHNICAL DATA WHOSE EXPORT IS RESTRICTED BY THE ARMS EXPORT CONTROL ACT (TITLE 22, U.S.C. SEC. 2751 ET SEQ.) OR EXECUTIVE ORDER 12470. VIOLATIONS OF THESE EXPORT LAWS ARE SUBJECT TO SEVERE CRIMINAL PENALTIES.

DESTRUCTION NOTICE: DESTROY BY ANY METHOD THAT WILL PREVENT DISCLOSURE OF CONTENTS OR RECONSTRUCTION OF THE DOCUMENT.

APPLICATION	
NEXT ASSY	USED ON
8287501	8287500

MATERIAL:

SEAMLESS STEEL TUBING
ASTM A519
GRADE 1026

PART OR IDENTIFYING NO.	QTY REQD	CODE IDENT NO.	DRAWING OR SPECIFICATION	NOMENCLATURE OR DESCRIPTION	REMARKS

PARTS LIST

UNLESS OTHERWISE SPECIFIED:
ALL DIMENSIONS ARE IN INCHES
TOLERANCES: ANGLES± .5°
FRACTIONS±
DECIMALS
.XX± .02
.XXX± .005
BEND RADII
FILLETS & ROUNDS .125/
SURFACE FINISH √
BREAK ALL SHARP EDGES

INTERPRET DRAWING IN ACCORDANCE WITH STANDARDS PRESCRIBED IN ASME Y14.100

DO NOT SCALE THIS DRAWING

PORT HUENEME DIVISION
NAVAL SURFACE WARFARE CENTER
4363 MISSILE WAY
PORT HUENEME, CA 93043–4307

PREPARED	AMSEC	06–07
CHECKED		
TECH LEAD		
BR HD		
ACCEPTED BY NAVSEA		(SIGNATURE DOES NOT DENOTE APPROVAL)
APPROVED FOR NAVSEA		(SIGN ONLY IF ENGINEERING HAS BEEN "PROVED" BY MANUFACTURE AND TEST)

DEPARTMENT OF THE NAVY
NAVAL SEA SYSTEMS COMMAND
WASHINGTON, D.C. 20376–5160

HEAVY UNREP–NAVY STANDARD
RAM TENSIONER

PLAIN FLOW CONTROL VALVE SLEEVE

SIZE	CAGE CODE	NAVSEA DWG NO.	REV
D	53711	8287580	–

SCALE 1/1 | UNIT WT 12.7 LBS | SHEET 1 OF 1

NSWC 4120/8 (REV 03–92)

NOTES:

1. CARBURIZE ALL OVER TO A DEPTH OF .050–.065 INCH IN ACCORDANCE WITH SAE–AMS2759/7 AND HEAT TREAT PER SAE–AMS2759/7, HARDEN TO C50 MINIMUM TO AN EFFECTIVE CASE DEPTH OF .030 INCH.

REVISIONS				
ZONE	LTR	DESCRIPTION	DATE	APPROVED

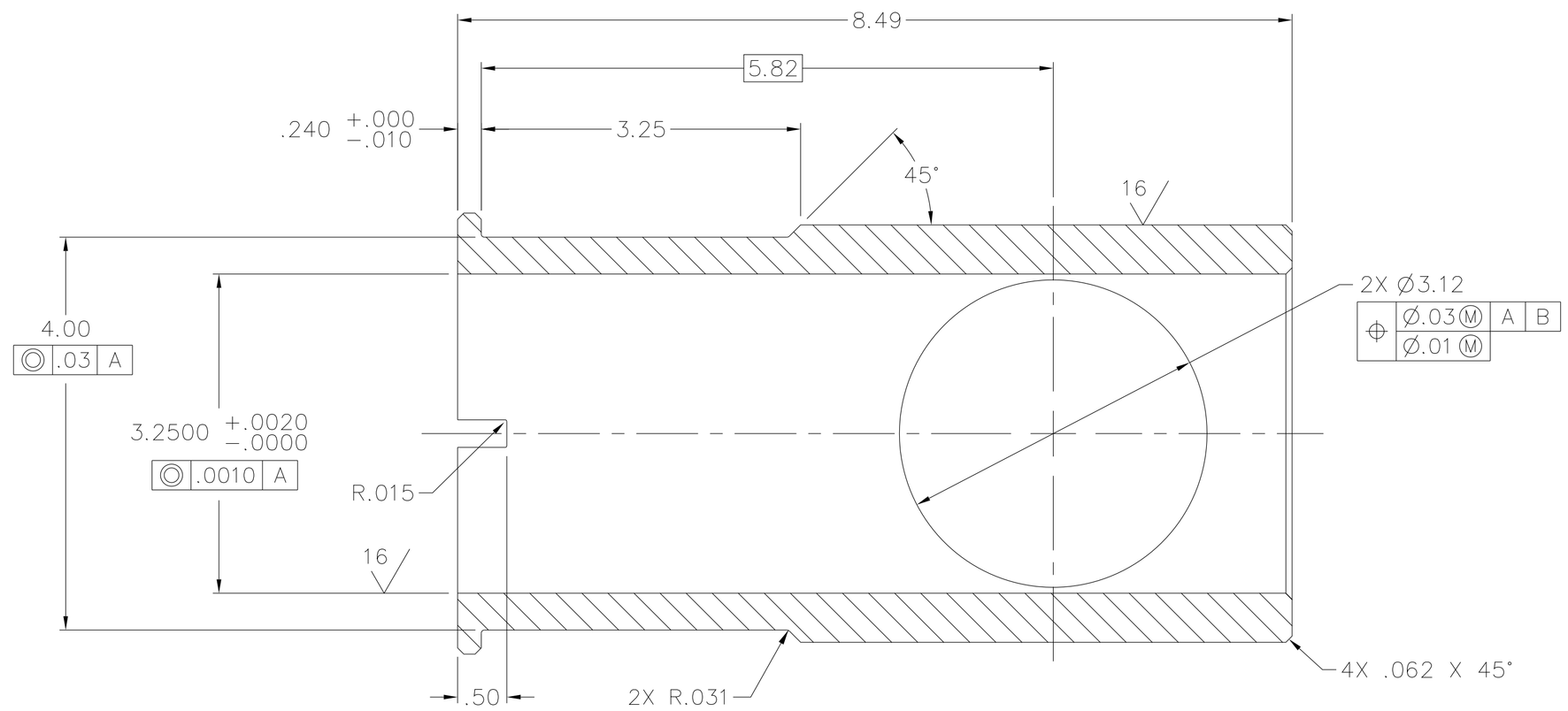

SECTION A–A

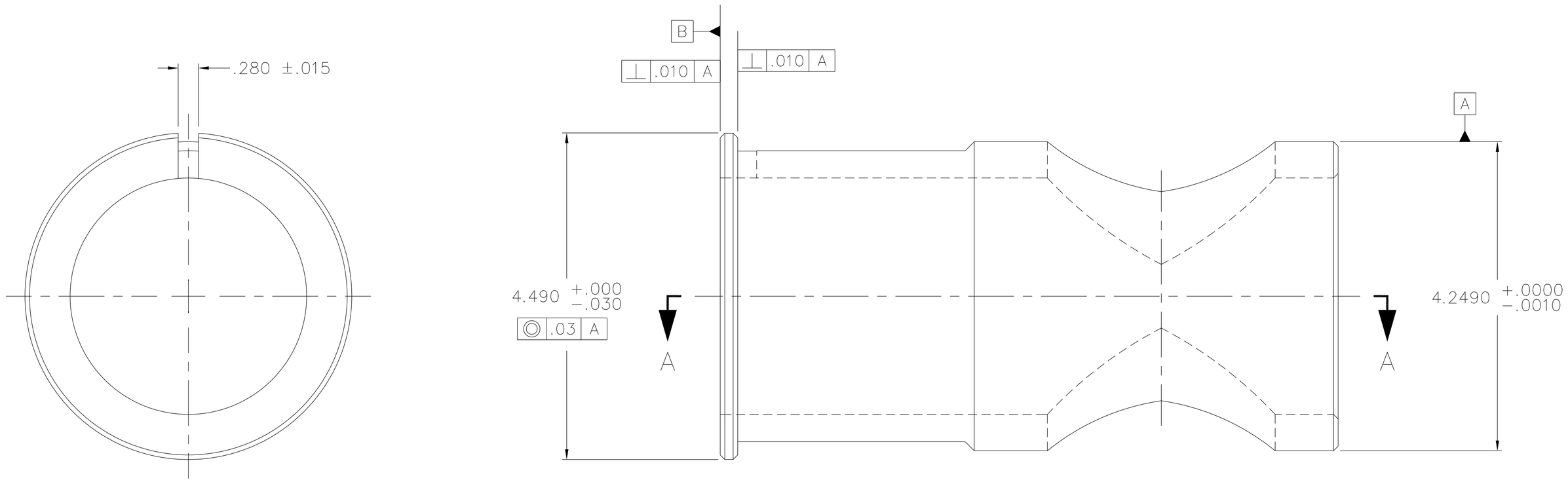

PART OR IDENTIFYING NO.	QTY REQD	CODE IDENT NO.	DRAWING OR SPECIFICATION	NOMENCLATURE OR DESCRIPTION	REMARKS

PARTS LIST

NOTICE OF CONFIGURATION CONTROL

THIS DRAWING DEFINES AN ITEM OF UNDERWAY REPLENISHMENT (UNREP) STANDARD HARDWARE. NO REVISION TO THIS DRAWING OR THE HARDWARE REPRESENTED BY IT IS AUTHORIZED WITHOUT THE WRITTEN APPROVAL OF THE NAVAL SEA SYSTEMS COMMAND.

DISTRIBUTION STATEMENT C: DISTRIBUTION AUTHORIZED TO U.S. GOVERNMENT AGENCIES AND THEIR CONTRACTORS: OTHER REQUESTS MUST BE REFERRED TO COMNAVSEA OR THE COGNIZANT NAVSEA CODE.

WARNING: THIS DOCUMENT CONTAINS TECHNICAL DATA WHOSE EXPORT IS RESTRICTED BY THE ARMS EXPORT CONTROL ACT (TITLE 22, U.S.C. SEC. 2751 ET SEQ.) OR EXECUTIVE ORDER 12470. VIOLATIONS OF THESE EXPORT LAWS ARE SUBJECT TO SEVERE CRIMINAL PENALTIES.

DESTRUCTION NOTICE: DESTROY BY ANY METHOD THAT WILL PREVENT DISCLOSURE OF CONTENTS OR RECONSTRUCTION OF THE DOCUMENT.

APPLICATION	
NEXT ASSY	USED ON
8287501	8287500

MATERIAL:

SEAMLESS STEEL TUBING
ASTM A519
GRADE 1026

UNLESS OTHERWISE SPECIFIED:
ALL DIMENSIONS ARE IN INCHES
TOLERANCES: ANGLES± .5°
FRACTIONS±
DECIMALS
.XX± .02
.XXX± .005
BEND RADII
FILLETS & ROUNDS 125/
SURFACE FINISH √
BREAK ALL SHARP EDGES

INTERPRET DRAWING IN ACCORDANCE WITH STANDARDS PRESCRIBED IN ASME Y14.100

DO NOT SCALE THIS DRAWING

PORT HUENEME DIVISION
NAVAL SURFACE WARFARE CENTER
4363 MISSILE WAY
PORT HUENEME, CA 93043–4307

PREPARED	AMSEC	06–07
CHECKED		
TECH LEAD		
BR HD		

ACCEPTED BY NAVSEA (SIGNATURE DOES NOT DENOTE APPROVAL)

APPROVED FOR NAVSEA (SIGN ONLY IF ENGINEERING HAS BEEN "PROVED" BY MANUFACTURE AND TEST)

DEPARTMENT OF THE NAVY
NAVAL SEA SYSTEMS COMMAND
WASHINGTON, D.C. 20376–5160

HEAVY UNREP–NAVY STANDARD
RAM TENSIONER

PORTED FLOW CONTROL VALVE SLEEVE

SIZE	CAGE CODE	NAVSEA DWG NO.	REV
D	53711	8287581	—

SCALE 1/1 | UNIT WT 10.3 LBS | SHEET 1 OF 1

8287581

NSWC 4120/8 (REV 03–92)

NOTES:

1. PAINT ALL SURFACES WITH PROCEDURES AND MATERIALS SPECIFIED IN PC 1 USING SPECIAL PROCEDURE FOR RAM TENSIONER.

REVISIONS

ZONE	LTR	DESCRIPTION	DATE	APPROVED

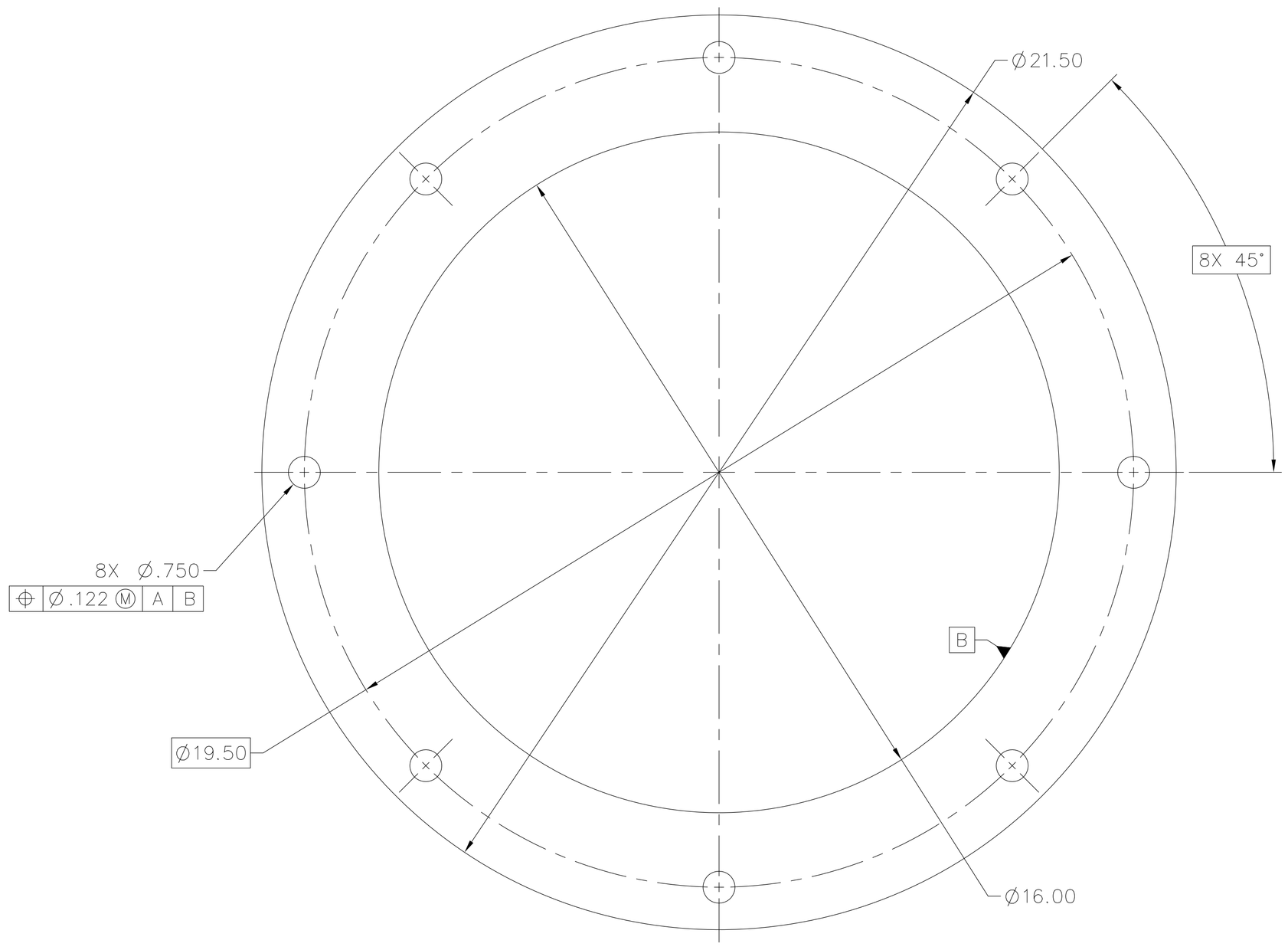

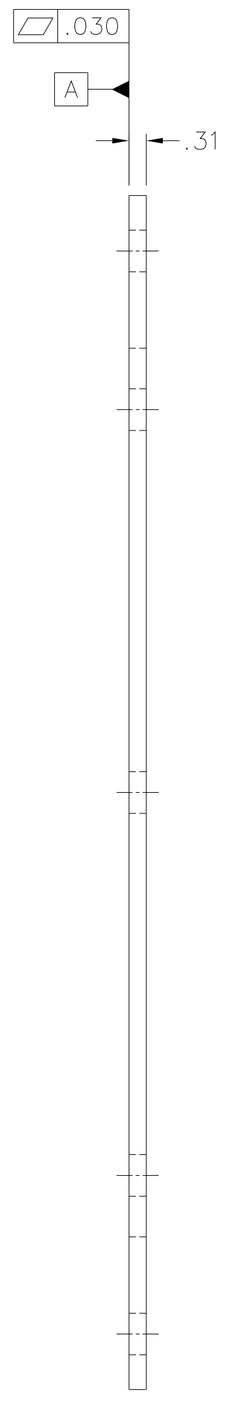

PART OR IDENTIFYING NO.	QTY REQD	CODE IDENT NO.	DRAWING OR SPECIFICATION	NOMENCLATURE OR DESCRIPTION	REMARKS
1	AR	53711	5210545	STD PAINT PROCEDURE–UNREP	SEE NOTE 1

PARTS LIST

NOTICE OF CONFIGURATION CONTROL

THIS DRAWING DEFINES AN ITEM OF UNDERWAY REPLENISHMENT (UNREP) STANDARD HARDWARE. NO REVISION TO THIS DRAWING OR THE HARDWARE REPRESENTED BY IT IS AUTHORIZED WITHOUT THE WRITTEN APPROVAL OF THE NAVAL SEA SYSTEMS COMMAND.

DISTRIBUTION STATEMENT C: DISTRIBUTION AUTHORIZED TO U.S. GOVERNMENT AGENCIES AND THEIR CONTRACTORS: OTHER REQUESTS MUST BE REFERRED TO COMNAVSEA OR THE COGNIZANT NAVSEA CODE.

WARNING: THIS DOCUMENT CONTAINS TECHNICAL DATA WHOSE EXPORT IS RESTRICTED BY THE ARMS EXPORT CONTROL ACT (TITLE 22, U.S.C. SEC. 2751 ET SEQ.) OR EXECUTIVE ORDER 12470. VIOLATIONS OF THESE EXPORT LAWS ARE SUBJECT TO SEVERE CRIMINAL PENALTIES.

DESTRUCTION NOTICE: DESTROY BY ANY METHOD THAT WILL PREVENT DISCLOSURE OF CONTENTS OR RECONSTRUCTION OF THE DOCUMENT.

APPLICATION	
NEXT ASSY	USED ON
8287501	8287500

MATERIAL:
STEEL
PER ASTM A36
OR
LOW ALLOY HIGH
STRENGTH STEEL
PER ASTM A572
OR ASTM A588
GRADE B

UNLESS OTHERWISE SPECIFIED:
ALL DIMENSIONS ARE IN INCHES
TOLERANCES: ANGLES± .5°
FRACTIONS±
DECIMALS
.XX± .02
.XXX± .005
BEND RADII
FILLETS & ROUNDS
SURFACE FINISH 250
BREAK ALL SHARP EDGES

INTERPRET DRAWING IN ACCORDANCE WITH STANDARDS PRESCRIBED IN ASME Y14.100

DO NOT SCALE THIS DRAWING

PORT HUENEME DIVISION
NAVAL SURFACE WARFARE CENTER
4363 MISSILE WAY
PORT HUENEME, CA 93043–4307

PREPARED	AMSEC	06–07
CHECKED		
TECH LEAD		
BR HD		
ACCEPTED BY NAVSEA		(SIGNATURE DOES NOT DENOTE APPROVAL)
APPROVED FOR NAVSEA		(SIGN ONLY IF ENGINEERING HAS BEEN "PROVED" BY MANUFACTURE AND TEST)

DEPARTMENT OF THE NAVY
NAVAL SEA SYSTEMS COMMAND
WASHINGTON, D.C. 20376–5160

HEAVY UNREP–NAVY STANDARD
RAM TENSIONER

WIPER RING RETAINER

SIZE	CAGE CODE	NAVSEA DWG NO.	REV
D	53711	8287582	—

SCALE 1/2 | UNIT WT 9.6 LBS | SHEET 1 OF 1

8287582

NSWC 4120/8 (REV 03–92)

SUGGESTED SOURCE(S) OF SUPPLY				
SUPPLIER/VENDOR DATA				
CAGE	DASH NUMBER	PART/DRAWING NUMBER	NAME & ADDRESS	APPLICATION
3EWY1	-1	15-SB-1-R-.375-.500	VERMATIC INC 1785 S. JOHNSON RD NEW BERLIN, WI 53146 (262) 513-9384 (800) 922-6461 FAX: (262) 513-9403	HEAVY UNREP NAVY STANDARD RAM TENSIONER
	-2	15-SB-1-R-.375-.375		

TABLE A		
DASH NO.	TUBE SIZE	
	A	B
-1	.375	.500
-2	.375	.375

REVISIONS				
ZONE	LTR	DESCRIPTION	DATE	APPROVED

NOTES:

1. ONLY THE ITEM DESCRIBED ON THIS DRAWING WHEN PURCHASED FROM THE VENDOR(S) LISTED HEREON IS APPROVED BY THE NAVY FOR USE ON THE APPLICATION(S) SPECIFIED HEREIN. A SUBSTITUTE ITEM SHALL NOT BE USED WITHOUT PRIOR APPROVAL BY THE NAVY.
2. IDENTIFICATION OF THE "APPROVED SOURCE(S) OF SUPPLY" HEREON IS NOT TO BE CONSTRUED AS A GUARANTEE OF PRESENT OR CONTINUED AVAILABILITY AS A SOURCE OF SUPPLY FOR THE ITEM DESCRIBED ON THE DRAWING.
3. ALL MATERIALS USED SHALL BE COMPATIBLE WITH PHOSPHATE ESTER HYDRAULIC FLUID PER MIL-H-19457 (REV C OR LATER).

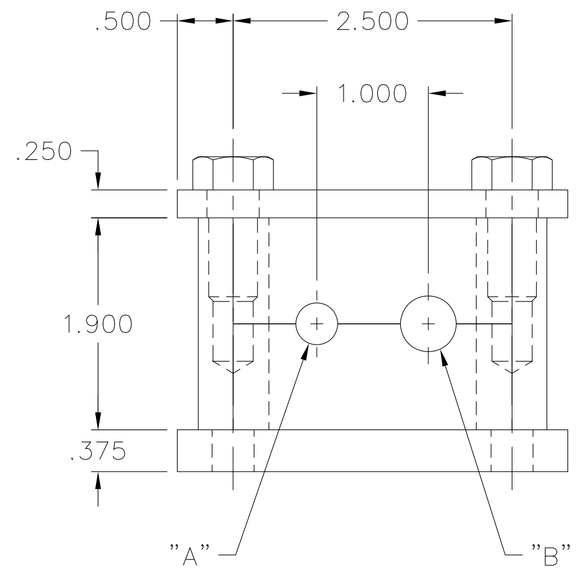

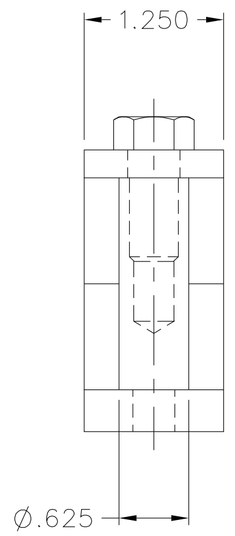

NOTICE OF CONFIGURATION CONTROL

THIS DRAWING DEFINES AN ITEM OF UNDERWAY REPLENISHMENT (UNREP) STANDARD HARDWARE. NO REVISION TO THIS DRAWING OR THE HARDWARE REPRESENTED BY IT IS AUTHORIZED WITHOUT THE WRITTEN APPROVAL OF THE NAVAL SEA SYSTEMS COMMAND.

DISTRIBUTION STATEMENT C: DISTRIBUTION AUTHORIZED TO U.S. GOVERNMENT AGENCIES AND THEIR CONTRACTORS: OTHER REQUESTS MUST BE REFERRED TO COMNAVSEA OR THE COGNIZANT NAVSEA CODE.

WARNING: THIS DOCUMENT CONTAINS TECHNICAL DATA WHOSE EXPORT IS RESTRICTED BY THE ARMS EXPORT CONTROL ACT (TITLE 22, U.S.C. SEC. 2751 ET SEQ.) OR EXECUTIVE ORDER 12470. VIOLATIONS OF THESE EXPORT LAWS ARE SUBJECT TO SEVERE CRIMINAL PENALTIES.

DESTRUCTION NOTICE: DESTROY BY ANY METHOD THAT WILL PREVENT DISCLOSURE OF CONTENTS OR RECONSTRUCTION OF THE DOCUMENT.

APPLICATION	
NEXT ASSY	USED ON
8287500	8287500

MATERIAL: VARIOUS

UNLESS OTHERWISE SPECIFIED:
ALL DIMENSIONS ARE IN INCHES
TOLERANCES: ANGLES± FRACTIONS± DECIMALS .XX± .XXX± .005
BEND RADII
FILLETS & ROUNDS
SURFACE FINISH √
BREAK ALL SHARP EDGES
INTERPRET DRAWING IN ACCORDANCE WITH STANDARDS PRESCRIBED IN ASME Y14.100
DO NOT SCALE THIS DRAWING

PORT HUENEME DIVISION NAVAL SURFACE WARFARE CENTER 4363 MISSILE WAY PORT HUENEME, CA 93043-4307		
PREPARED	AMSEC	06-07
CHECKED		
TECH LEAD		
BR HD		
ACCEPTED BY NAVSEA	(SIGNATURE DOES NOT DENOTE APPROVAL)	
APPROVED FOR NAVSEA	(SIGN ONLY IF ENGINEERING HAS BEEN "PROVED" BY MANUFACTURE AND TEST)	

DEPARTMENT OF THE NAVY
NAVAL SEA SYSTEMS COMMAND
WASHINGTON, D.C. 20376-5160

HEAVY UNREP-NAVY STANDARD
RAM TENSIONER

TUBING CUSHION CLAMP

SIZE	CAGE CODE	NAVSEA DWG NO.	REV
D	53711	8287584	-

SCALE 1/1 | UNIT WT .5 LBS | SHEET 1 OF 1

SOURCE CONTROL DRAWING

PART OR IDENTIFYING NO.	QTY REQD	CODE IDENT NO.	DRAWING OR SPECIFICATION	NOMENCLATURE OR DESCRIPTION	REMARKS

PARTS LIST

8287584

NSWC 4120/8 (REV 03-92)

REVISIONS				
ZONE	LTR	DESCRIPTION	DATE	APPROVED

SUGGESTED SOURCE(S) OF SUPPLY			
SUPPLIER/VENDOR DATA			
CAGE	PART/DRAWING NUMBER	NAME & ADDRESS	APPLICATION
97484	3D8546	TEDECO DIV OF EATON AEROSPACE LLC 24 E GLENOLDEN AVENUE GLENOLDEN, PA 19036	HEAVY UNREP NAVY STANDARD RAM TENSIONER

NOTES:

1. IDENTIFICATION OF THE "SUGGESTED SOURCE(S) OF SUPPLY" HEREON IS NOT TO BE CONSTRUED AS A GUARANTEE OF PRESENT OR CONTINUED AVAILABILITY AS A SOURCE OF SUPPLY FOR THE ITEM DESCRIBED ON THE DRAWING.
2. THE SUGGESTED SOURCE(S) LISTED ARE NOT INTENDED TO REPRESENT THE ONLY SOURCE(S) FOR THE ITEM(S).
3. ALL MATERIALS USED SHALL BE COMPATIBLE WITH PHOSPHATE ESTER HYDRAULIC FLUID PER MIL-H-19457 (REV C OR LATER).
4. BURST PRESSURE: 3,300 PSI MIN @70° F.
5. THIS ITEM SHALL BE HYDROSTATICALLY TESTED TO 1,650 PSI AND HELD FOR TEN MINUTES WITHOUT LEAKAGE. ALL EQUIPMENT REQUIRED FOR TEST SHALL BE PROVIDED BY THE MANUFACTURER.
6. PAINT EXTERIOR, EXCEPT FOR WINDOWS, WITH MATERIALS SPECIFIED IN P/N 3, USING THE SPECIAL PROCEDURE FOR STAINLESS STEEL RAM TENSIONER PARTS.
7. TEMPORARY PLASTIC PLUGS SHALL BE PROVIDED AT PORTS TO PREVENT CONTAMINANT FROM ENTERING SIGHT INDICATOR.
8. ALL DIMENSIONS ARE REFERENCE.

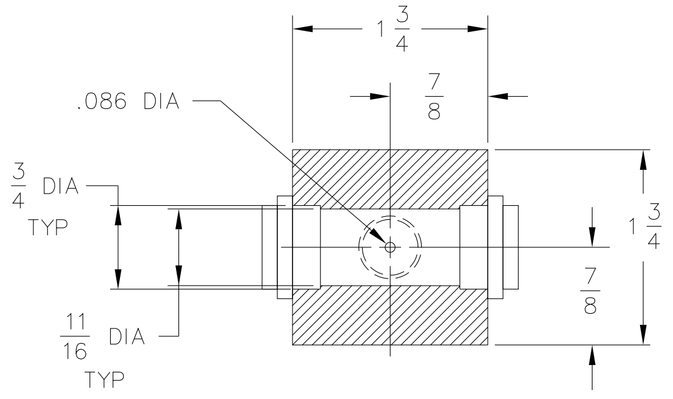

SECTION A-A

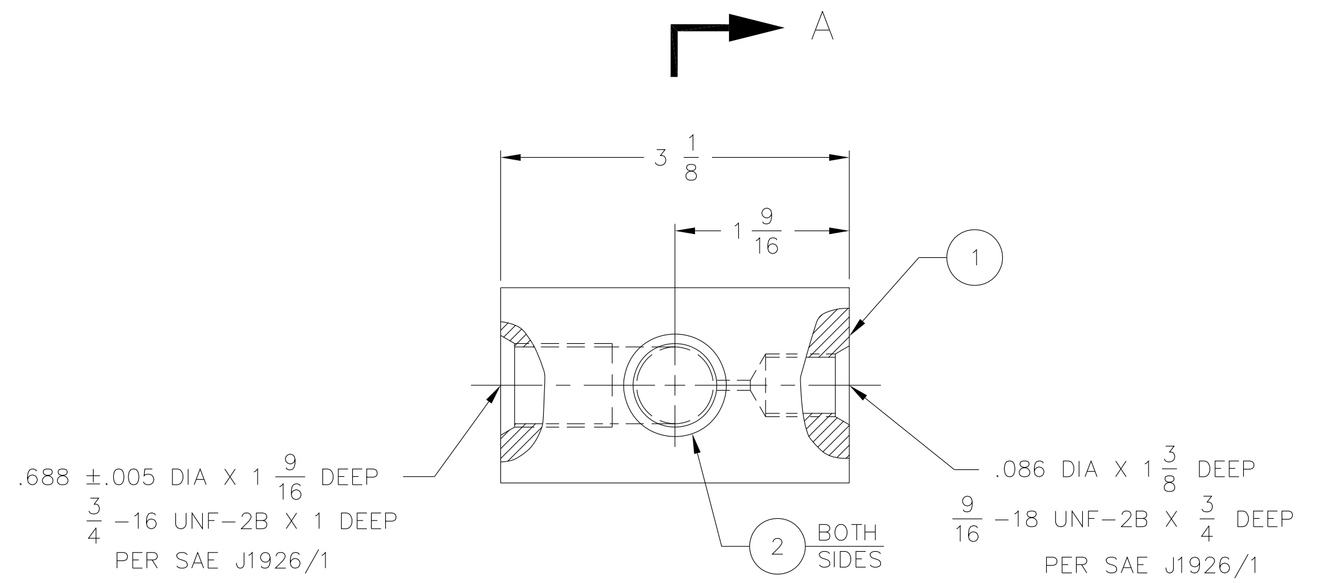

NOTICE OF CONFIGURATION CONTROL

THIS DRAWING DEFINES AN ITEM OF UNDERWAY REPLENISHMENT (UNREP) STANDARD HARDWARE. NO REVISION TO THIS DRAWING OR THE HARDWARE REPRESENTED BY IT IS AUTHORIZED WITHOUT THE WRITTEN APPROVAL OF THE NAVAL SEA SYSTEMS COMMAND.

DISTRIBUTION STATEMENT C: DISTRIBUTION AUTHORIZED TO U.S. GOVERNMENT AGENCIES AND THEIR CONTRACTORS: OTHER REQUESTS MUST BE REFERRED TO COMNAVSEA OR THE COGNIZANT NAVSEA CODE.

WARNING: THIS DOCUMENT CONTAINS TECHNICAL DATA WHOSE EXPORT IS RESTRICTED BY THE ARMS EXPORT CONTROL ACT (TITLE 22, U.S.C. SEC. 2751 ET SEQ.) OR EXECUTIVE ORDER 12470. VIOLATIONS OF THESE EXPORT LAWS ARE SUBJECT TO SEVERE CRIMINAL PENALTIES.

DESTRUCTION NOTICE: DESTROY BY ANY METHOD THAT WILL PREVENT DISCLOSURE OF CONTENTS OR RECONSTRUCTION OF THE DOCUMENT.

APPLICATION	
NEXT ASSY	USED ON
8287500	8287500

MATERIAL:
P/N 1: CRES
P/N 2: GLASS

UNLESS OTHERWISE SPECIFIED:
ALL DIMENSIONS ARE IN INCHES
TOLERANCES: ANGLES±
FRACTIONS±
DECIMALS
.XX±
.XXX± .010
BEND RADII
FILLETS & ROUNDS
SURFACE FINISH √
BREAK ALL SHARP EDGES
INTERPRET DRAWING IN ACCORDANCE WITH STANDARDS PRESCRIBED IN ASME Y14.100
DO NOT SCALE THIS DRAWING

PORT HUENEME DIVISION
NAVAL SURFACE WARFARE CENTER
4363 MISSILE WAY
PORT HUENEME, CA 93043-4307

PREPARED	AMSEC	06-07
CHECKED		
TECH LEAD		
BR HD		
ACCEPTED BY NAVSEA	(SIGNATURE DOES NOT DENOTE APPROVAL)	
APPROVED FOR NAVSEA	(SIGN ONLY IF ENGINEERING HAS BEEN "PROVED" BY MANUFACTURE AND TEST)	

DEPARTMENT OF THE NAVY
NAVAL SEA SYSTEMS COMMAND
WASHINGTON,D.C. 20362-5101

HEAVY UNREP - NAVY STANDARD
RAM TENSIONER

SIGHT INDICATOR

SIZE	CAGE CODE	NAVSEA DWG NO.	REV
D	53711	8287585	-

SCALE FULL | UNIT WT 2 LBS | SHEET 1 OF 1

SPECIFICATION CONTROL DRAWING

PART OR IDENTIFYING NO.	QTY REQD	CODE IDENT NO.	DRAWING OR SPECIFICATION	NOMENCLATURE OR DESCRIPTION	REMARKS
3	AR	53711	5210545	STD PAINT PROC-UNREP	(SEE NOTE 6)
2	2			WINDOW	
1	1			SQUARE BAR	

PARTS LIST

8287585

NSWC 4120/8 (REV 03-09)

REVISIONS				
ZONE	LTR	DESCRIPTION	DATE	APPROVED

SUGGESTED SOURCE(S) OF SUPPLY				
SUPPLIER/VENDOR DATA				
CAGE	DASH NUMBER	PART/DRAWING NUMBER	NAME & ADDRESS	APPLICATION
99565	–1	H854–6–6–SS	COMBINATION PUMP VALVE CO 851 NORTH PRESTON ST PHILADELPHIA, PA 19104–1563	HEAVY UNREP NAVY STANDARD RAM TENSIONER
	–2	H854–8–6–SS		
79926	–1	AP6–6C–SS	SSP FITTINGS CORP. 8250 BOYLE PARKWAY TWINSBURG, OH 44087	HEAVY UNREP NAVY STANDARD RAM TENSIONER
	–2	AP8–6C–SS		

NOTES:

1. IDENTIFICATION OF THE "SUGGESTED SOURCE(S) OF SUPPLY" HEREON IS NOT TO BE CONSTRUED AS A GUARANTEE OF PRESENT OR CONTINUED AVAILABILITY AS A SOURCE OF SUPPLY FOR THE ITEM DESCRIBED ON THE DRAWING.
2. THE SUGGESTED SOURCE(S) LISTED ARE NOT INTENDED TO REPRESENT THE ONLY SOURCE(S) FOR THE ITEM(S).
3. CONNECTOR ASSEMBLIES SHALL BE RATED FOR 6000 PSIG WORKING PRESSURE.
4. THE CONNECTOR BODY END FOR –1 AND –2 TAILPIECE/SLEEVES SHALL HAVE FACE GROOVES FOR 7/16 IN ID X 1/16 IN WIDE O–RING AND 9/16 IN ID X 1/16 IN WIDE O–RING, (SAE AS568–013 & 015), RESPECTIVELY.
5. PRE–INSERTED SIL BRAZE RING (MATERIAL: GRADE V OR VII SIL–BRAZE ALLOY IN ACCORDANCE WITH QQ–B–654) SHALL BE PROVIDED IN THE BOTTOM OF THE TAIL PIECE SLEEVE SOCKET.
6. CONNECTOR ASSEMBLY SHALL BE PROVIDED WITHOUT O–RINGS.

TABLE A

DASH NO.	DIMENSIONS				
	A – SOCKET TUBE OD	B HEX	C HEX	D PIPE THREAD	E LENGTH
–1	3/8	15/16	7/8	3/8–18	1 13/16
–2	1/2	15/16	7/8	3/8–18	1 7/8

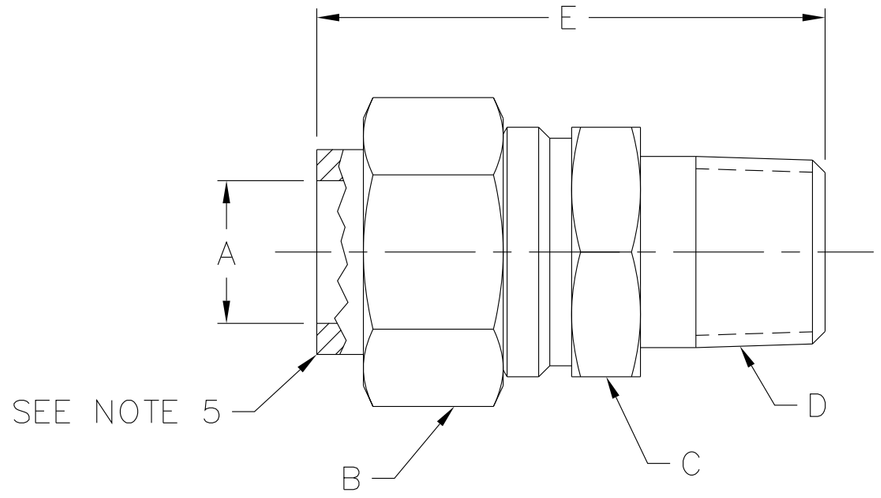

SPECIFICATION CONTROL DRAWING

PART OR IDENTIFYING NO.	QTY REQD	CODE IDENT NO.	DRAWING OR SPECIFICATION	NOMENCLATURE OR DESCRIPTION	REMARKS

PARTS LIST

DISTRIBUTION STATEMENT C: DISTRIBUTION AUTHORIZED TO U.S. GOVERNMENT AGENCIES AND THEIR CONTRACTORS; OTHER REQUESTS MUST BE REFERRED TO COMNAVSEA OR THE COGNIZANT NAVSEA CODE.

WARNING: THIS DOCUMENT CONTAINS TECHNICAL DATA WHOSE EXPORT IS RESTRICTED BY THE ARMS EXPORT CONTROL ACT (TITLE 22, U.S.C. SEC. 2751 ET SEQ.) OR EXECUTIVE ORDER 12470. VIOLATIONS OF THESE EXPORT LAWS ARE SUBJECT TO SEVERE CRIMINAL PENALTIES.

DESTRUCTION NOTICE: DESTROY BY ANY METHOD THAT WILL PREVENT DISCLOSURE OF CONTENTS OR RECONSTRUCTION OF THE DOCUMENT.

NOTICE OF CONFIGURATION CONTROL

THIS DRAWING DEFINES AN ITEM OF UNDERWAY REPLENISHMENT (UNREP) STANDARD HARDWARE. NO REVISION TO THIS DRAWING OR THE HARDWARE REPRESENTED BY IT IS AUTHORIZED WITHOUT THE WRITTEN APPROVAL OF THE NAVAL SEA SYSTEMS COMMAND.

APPLICATION	
NEXT ASSY	USED ON
8287534	8287500
8287551	
8287552	
8287557	

MATERIAL: CRES 316

UNLESS OTHERWISE SPECIFIED:
ALL DIMENSIONS ARE IN INCHES
TOLERANCES: ANGLES±
FRACTIONS±
DECIMALS
.XX±
.XXX±
BEND RADII
FILLETS & ROUNDS

SURFACE FINISH √
BREAK ALL SHARP EDGES

INTERPRET DRAWING IN ACCORDANCE WITH STANDARDS PRESCRIBED IN ASME Y14.100

DO NOT SCALE THIS DRAWING

PORT HUENEME DIVISION
NAVAL SURFACE WARFARE CENTER
4363 MISSILE WAY
PORT HUENEME, CA 93043–4307

PREPARED	AMSEC	06–07
CHECKED		
TECH LEAD		
BR HD		
ACCEPTED BY NAVSEA	(SIGNATURE DOES NOT DENOTE APPROVAL)	
APPROVED FOR NAVSEA	(SIGN ONLY IF ENGINEERING HAS BEEN "PROVED" BY MANUFACTURE AND TEST)	

DEPARTMENT OF THE NAVY
NAVAL SEA SYSTEMS COMMAND
WASHINGTON, D.C. 20376–5160

HEAVY UNREP – NAVY STANDARD
RAM TENSIONER

TUBE TO MALE PIPE CONNECTOR ASSY

SIZE	CAGE CODE	NAVSEA DWG NO.	REV
C	53711	8287586	–

SCALE NONE | UNIT WEIGHT: .5 LB | SHEET 1 OF 1

8287586 I

B

NSWC 4120/4 (REV. 03–92)

REVISIONS				
ZONE	LTR	DESCRIPTION	DATE	APPROVED

SUGGESTED SOURCE(S) OF SUPPLY				
SUPPLIER/VENDOR DATA				
CAGE	PART DESCRIPTION	PART/DRAWING NUMBER	NAME & ADDRESS	APPLICATION
99565	UNION TEE	H816-8-8-8-SS	COMBINATION PUMP VALVE CO 851 NORTH PRESTON ST PHILADELPHIA, PA 19104-1563	HEAVY UNREP NAVY STANDARD RAM TENSIONER
	BLANK TAILPIECE	H804R-8-SS		
79926	UNION TEE	AP8-8-8GRT	SSP FITTINGS CORP. 8250 BOYLE PARKWAY TWINSBURG, OH 44087	HEAVY UNREP NAVY STANDARD RAM TENSIONER
	BLANK TAILPIECE	P8BS		

NOTES:

1. IDENTIFICATION OF THE "SUGGESTED SOURCE(S) OF SUPPLY" HEREON IS NOT TO BE CONSTRUED AS A GUARANTEE OF PRESENT OR CONTINUED AVAILABILITY AS A SOURCE OF SUPPLY FOR THE ITEM DESCRIBED ON THE DRAWING.
2. THE SUGGESTED SOURCE(S) LISTED ARE NOT INTENDED TO REPRESENT THE ONLY SOURCE(S) FOR THE ITEM(S).
3. CONNECTOR ASSEMBLIES SHALL BE RATED FOR 6000 PSIG WORKING PRESSURE.
4. REPLACE TAILPIECE/SLEEVE WITH BLANK TAIL SLEEVE WHERE SHOWN.
5. THE TEE BODY ENDS SHALL HAVE FACE GROOVES FOR 9/16 IN ID X 1/16 IN WIDE O-RING, (SAE AS568-015).
6. PRE-INSERTED SIL BRAZE RING (MATERIAL: GRADE V OR VII SIL-BRAZE ALLOY IN ACCORDANCE WITH QQ-B-654) SHALL BE PROVIDED IN THE BOTTOM OF THE TAIL PIECE SLEEVE SOCKET.
7. TEE ASSEMBLY SHALL BE PROVIDED WITHOUT O-RINGS.

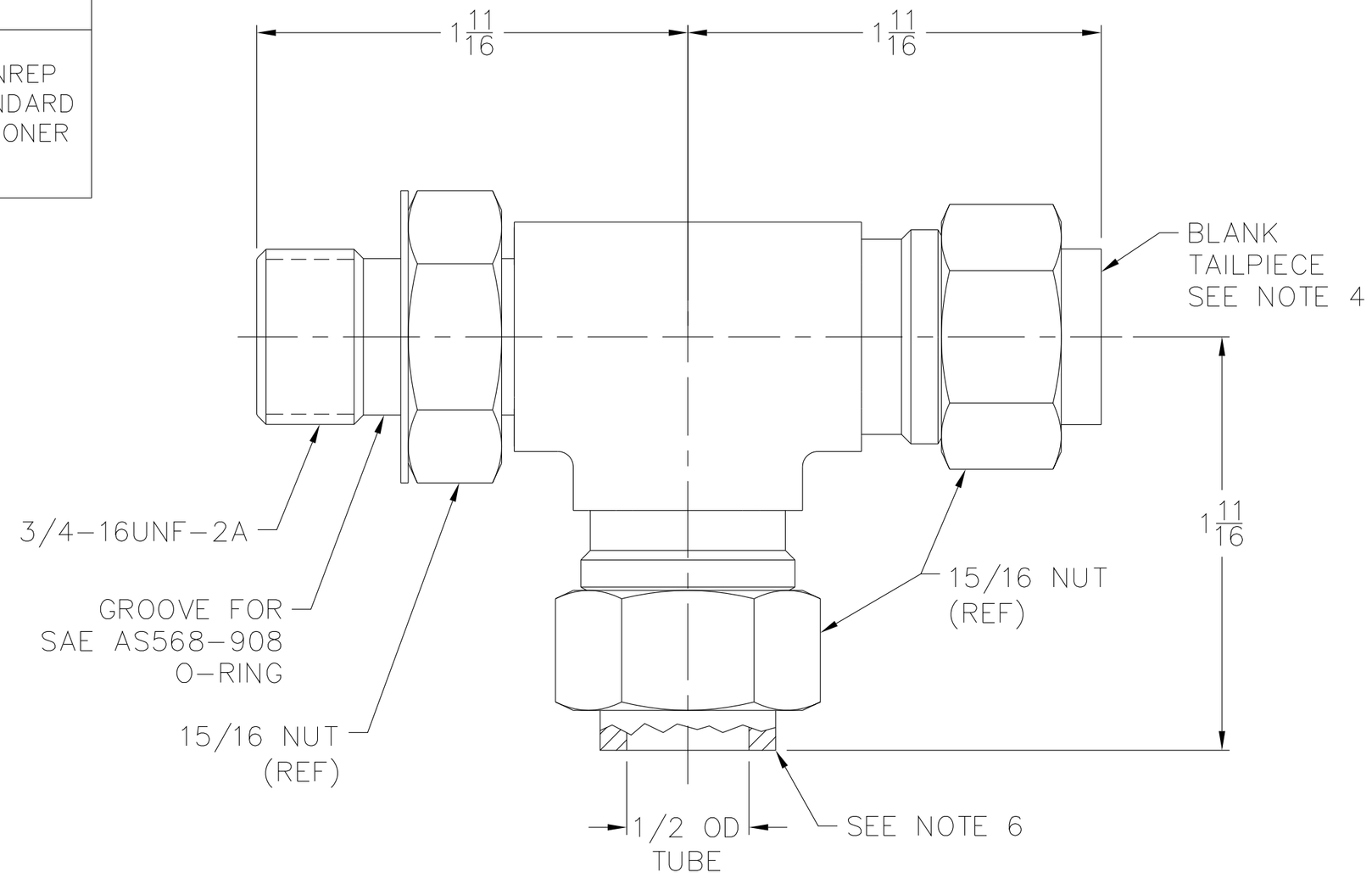

ALTERED ITEM DRAWING

PART OR IDENTIFYING NO.	QTY REQD	CODE IDENT NO.	DRAWING OR SPECIFICATION	NOMENCLATURE OR DESCRIPTION	REMARKS

PARTS LIST

DISTRIBUTION STATEMENT C: DISTRIBUTION AUTHORIZED TO U.S. GOVERNMENT AGENCIES AND THEIR CONTRACTORS; OTHER REQUESTS MUST BE REFERRED TO COMNAVSEA OR THE COGNIZANT NAVSEA CODE.

WARNING: THIS DOCUMENT CONTAINS TECHNICAL DATA WHOSE EXPORT IS RESTRICTED BY THE ARMS EXPORT CONTROL ACT (TITLE 22, U.S.C. SEC. 2751 ET SEQ.) OR EXECUTIVE ORDER 12470. VIOLATIONS OF THESE EXPORT LAWS ARE SUBJECT TO SEVERE CRIMINAL PENALTIES.

DESTRUCTION NOTICE: DESTROY BY ANY METHOD THAT WILL PREVENT DISCLOSURE OF CONTENTS OR RECONSTRUCTION OF THE DOCUMENT.

NOTICE OF CONFIGURATION CONTROL

THIS DRAWING DEFINES AN ITEM OF UNDERWAY REPLENISHMENT (UNREP) STANDARD HARDWARE. NO REVISION TO THIS DRAWING OR THE HARDWARE REPRESENTED BY IT IS AUTHORIZED WITHOUT THE WRITTEN APPROVAL OF THE NAVAL SEA SYSTEMS COMMAND.

APPLICATION	
NEXT ASSY	USED ON
8287552	8287500

MATERIAL: CRES 316

UNLESS OTHERWISE SPECIFIED:
ALL DIMENSIONS ARE IN INCHES
TOLERANCES: ANGLES±
FRACTIONS±
DECIMALS
.XX±
.XXX±
BEND RADII
FILLETS & ROUNDS
SURFACE FINISH √
BREAK ALL SHARP EDGES

INTERPRET DRAWING IN ACCORDANCE WITH STANDARDS PRESCRIBED IN ASME Y14.100

DO NOT SCALE THIS DRAWING

PORT HUENEME DIVISION
NAVAL SURFACE WARFARE CENTER
4363 MISSILE WAY
PORT HUENEME, CA 93043-4307

PREPARED	AMSEC	06-07
CHECKED		
TECH LEAD		
BR HD		
ACCEPTED BY NAVSEA	(SIGNATURE DOES NOT DENOTE APPROVAL)	
APPROVED FOR NAVSEA	(SIGN ONLY IF ENGINEERING HAS BEEN "PROVED" BY MANUFACTURE AND TEST)	

DEPARTMENT OF THE NAVY
NAVAL SEA SYSTEMS COMMAND
WASHINGTON, D.C. 20376-5160

HEAVY UNREP - NAVY STANDARD
RAM TENSIONER
UNION TUBE
TEE ASSEMBLY

SIZE	CAGE CODE	NAVSEA DWG NO.	REV
C	53711	8287587	—

SCALE NONE | UNIT WEIGHT: .6 LB | SHEET 1 OF 1

8287587 - B

NSWC 4120/4 (REV. 03-92)

REVISIONS				
ZONE	LTR	DESCRIPTION	DATE	APPROVED

SUGGESTED SOURCE(S) OF SUPPLY				
SUPPLIER/VENDOR DATA				
CAGE	DASH NUMBER	PART/DRAWING NUMBER	NAME & ADDRESS	APPLICATION
99565	-1	H823-6-6-SS	COMBINATION PUMP VALVE CO 851 NORTH PRESTON ST PHILADELPHIA, PA 19104-1563	NAVY STANDARD HEAVY UNREP RAM TENSIONER
	-2	H823-8-8-SS		
79926	-1	AP6-6GE-SS	SSP FITTINGS CORP. 8250 BOYLE PARKWAY TWINSBURG, OH 44087	NAVY STANDARD HEAVY UNREP RAM TENSIONER
	-2	AP8-8GE-SS		

NOTES:

1. IDENTIFICATION OF THE "SUGGESTED SOURCE(S) OF SUPPLY" HEREON IS NOT TO BE CONSTRUED AS A GUARANTEE OF PRESENT OR CONTINUED AVAILABILITY AS A SOURCE OF SUPPLY FOR THE ITEM DESCRIBED ON THE DRAWING.
2. THE SUGGESTED SOURCE(S) LISTED ARE NOT INTENDED TO REPRESENT THE ONLY SOURCE(S) FOR THE ITEM(S).
3. CONNECTOR ASSEMBLIES SHALL BE RATED FOR 6000 PSIG WORKING PRESSURE.
4. THE ELBOW BODY END FOR -1 AND -2 TAILPIECE/SLEEVES SHALL HAVE FACE GROOVES FOR 7/16 IN ID X 1/16 IN WIDE O-RING AND 9/16 IN ID X 1/16 IN WIDE O-RING, (SAE AS568-013 & 015), RESPECTIVELY.
5. PRE-INSERTED SIL BRAZE RING (MATERIAL: GRADE V OR VII SIL-BRAZE ALLOY IN ACCORDANCE WITH QQ-B-654) SHALL BE PROVIDED IN THE BOTTOM OF THE TAIL PIECE SLEEVE SOCKET.
6. ELBOW ASSEMBLY SHALL BE PROVIDED WITHOUT O-RINGS.

TABLE A

DASH NO.	DIMENSIONS						
	A SOCKET TUBE OD	B HEX	C HEX	D GROOVE FOR	E THREAD	F LENGTH	G LENGTH
-1	3/8	13/16	3/4	SAE AS568-906 O-RING	9/16-18UNF-2A	1 1/4	1 1/2
-2	1/2	15/16	7/8	SAE AS568-908 O-RING	3/4-16UNF-2A	1 7/16	1 11/16

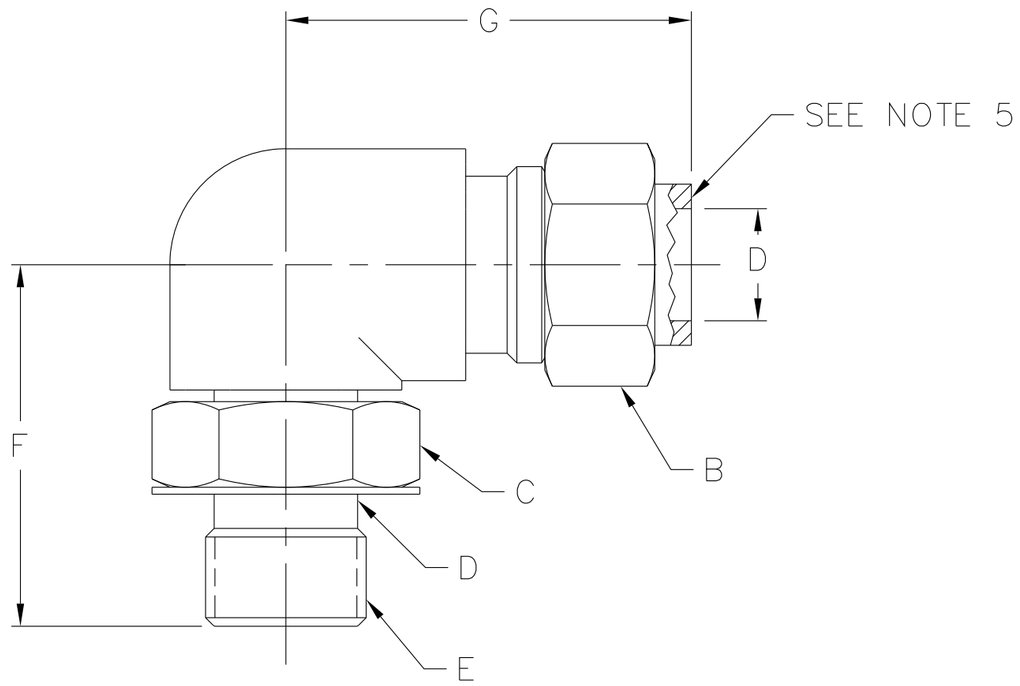

SPECIFICATION CONTROL DRAWING

PART OR IDENTIFYING NO.	QTY REQD	CODE IDENT NO.	DRAWING OR SPECIFICATION	NOMENCLATURE OR DESCRIPTION	REMARKS

PARTS LIST

DISTRIBUTION STATEMENT C: DISTRIBUTION AUTHORIZED TO U.S. GOVERNMENT AGENCIES AND THEIR CONTRACTORS; OTHER REQUESTS MUST BE REFERRED TO COMNAVSEA OR THE COGNIZANT NAVSEA CODE.

WARNING: THIS DOCUMENT CONTAINS TECHNICAL DATA WHOSE EXPORT IS RESTRICTED BY THE ARMS EXPORT CONTROL ACT (TITLE 22, U.S.C. SEC. 2751 ET SEQ.) OR EXECUTIVE ORDER 12470. VIOLATIONS OF THESE EXPORT LAWS ARE SUBJECT TO SEVERE CRIMINAL PENALTIES.

DESTRUCTION NOTICE: DESTROY BY ANY METHOD THAT WILL PREVENT DISCLOSURE OF CONTENTS OR RECONSTRUCTION OF THE DOCUMENT.

NOTICE OF CONFIGURATION CONTROL

THIS DRAWING DEFINES AN ITEM OF UNDERWAY REPLENISHMENT (UNREP) STANDARD HARDWARE. NO REVISION TO THIS DRAWING OR THE HARDWARE REPRESENTED BY IT IS AUTHORIZED WITHOUT THE WRITTEN APPROVAL OF THE NAVAL SEA SYSTEMS COMMAND.

APPLICATION	
NEXT ASSY	USED ON
8287552	8287500
8287558	
8287500	

MATERIAL:
CRES 316

UNLESS OTHERWISE SPECIFIED:
ALL DIMENSIONS ARE IN INCHES
TOLERANCES: ANGLES±
FRACTIONS±
DECIMALS
.XX±
.XXX±
BEND RADII
FILLETS & ROUNDS
SURFACE FINISH √
BREAK ALL SHARP EDGES

INTERPRET DRAWING IN ACCORDANCE WITH STANDARDS PRESCRIBED IN ASME Y14.100

DO NOT SCALE THIS DRAWING

PORT HUENEME DIVISION
NAVAL SURFACE WARFARE CENTER
4363 MISSILE WAY
PORT HUENEME, CA 93043-4307

PREPARED	AMSEC	06-07
CHECKED		
TECH LEAD		
BR HD		
ACCEPTED BY NAVSEA	(SIGNATURE DOES NOT DENOTE APPROVAL)	
APPROVED FOR NAVSEA	(SIGN ONLY IF ENGINEERING HAS BEEN "PROVED" BY MANUFACTURE AND TEST)	

DEPARTMENT OF THE NAVY
NAVAL SEA SYSTEMS COMMAND
WASHINGTON, D.C. 20376-5160

HEAVY UNREP - NAVY STANDARD
RAM TENSIONER

TUBE TO STRAIGHT THREAD ELBOW ASSEMBLY

SIZE	CAGE CODE	NAVSEA DWG NO.	REV
C	53711	8287588	-

SCALE NONE | UNIT WEIGHT: .5 LB | SHEET 1 OF 1

8287588 -

NSWC 4120/4 (REV. 03-92)

REVISIONS				
ZONE	LTR	DESCRIPTION	DATE	APPROVED

NOTES:

1. ONLY THE ITEM DESCRIBED ON THIS DRAWING WHEN PURCHASED FROM THE VENDOR(S) LISTED HEREON IS APPROVED BY THE NAVY FOR USE ON THE APPLICATION(S) SPECIFIED HEREIN. A SUBSTITUTE ITEM SHALL NOT BE USED WITHOUT PRIOR APPROVAL BY THE NAVY.
2. IDENTIFICATION OF THE "APPROVED SOURCE(S) OF SUPPLY" HEREON IS NOT TO BE CONSTRUED AS A GUARANTEE OF PRESENT OR CONTINUED AVAILABILITY AS A SOURCE OF SUPPLY FOR THE ITEM DESCRIBED ON THE DRAWING.
3. PROVIDE LIGHTENING HOLES TO MINIMIZE WEIGHT BUT WITHOUT COMPROMISING STRENGTH.
4. ALL DIMENSIONS SHOWN ARE REFERENCE. TOLERANCES ARE TO BE MANUFACTURER'S STANDARD.
5. ADDITIONAL ORDERING INFORMATION

5.1 SHEAVE IS FOR USE WITH ROLLWAY DBA BEARING NUP2324EM-VAA FROM EMERSON POWER TRANSMISSION CORP.

5.2 SHEAVE SHALL BE SUITABLE FOR USE WITH 1 3/8 INCH DIAMETER, 6 X 37, DOUBLE EXTRA IMPROVED PLOW STEEL, IWRC WIRE ROPE, PER RR-W-410. RATED WORKING LOAD SHALL BE 40,000 LBS WITH A 180 DEGREE WRAP AND 750 FPM LINE SPEED.

5.3 SHEAVE OPERATING CYCLE IS EXPECTED TO BE APPROXIMATELY 250 HRS PER YEAR. SHEAVE SHALL BE RATED FOR A FORTY (40) YEAR SERVICE LIFE.

SUGGESTED SOURCE(S) OF SUPPLY			
SUPPLIER/VENDOR DATA			
CODE IDENT	PART/DRAWING NUMBER	NAME & ADDRESS	APPLICATION
5F573	PART NO 8033529 FILE NO 0802-004	THE CROSBY GROUP INC PO BOX 3128 TULSA, OK 74101 WWW: THECROSBYGROUP.COM E-MAIL: CROSBYGROUP@THECROSBYGROUP.COM	HEAVY UNREP NAVY STANDARD RAM TENSIONER

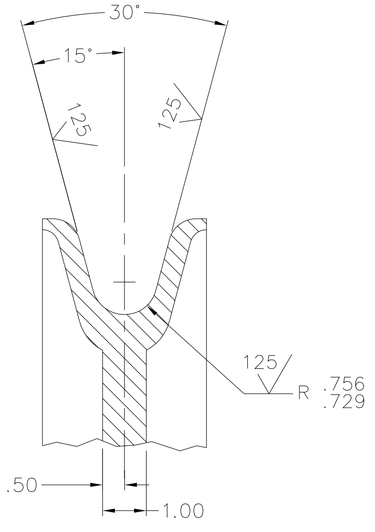

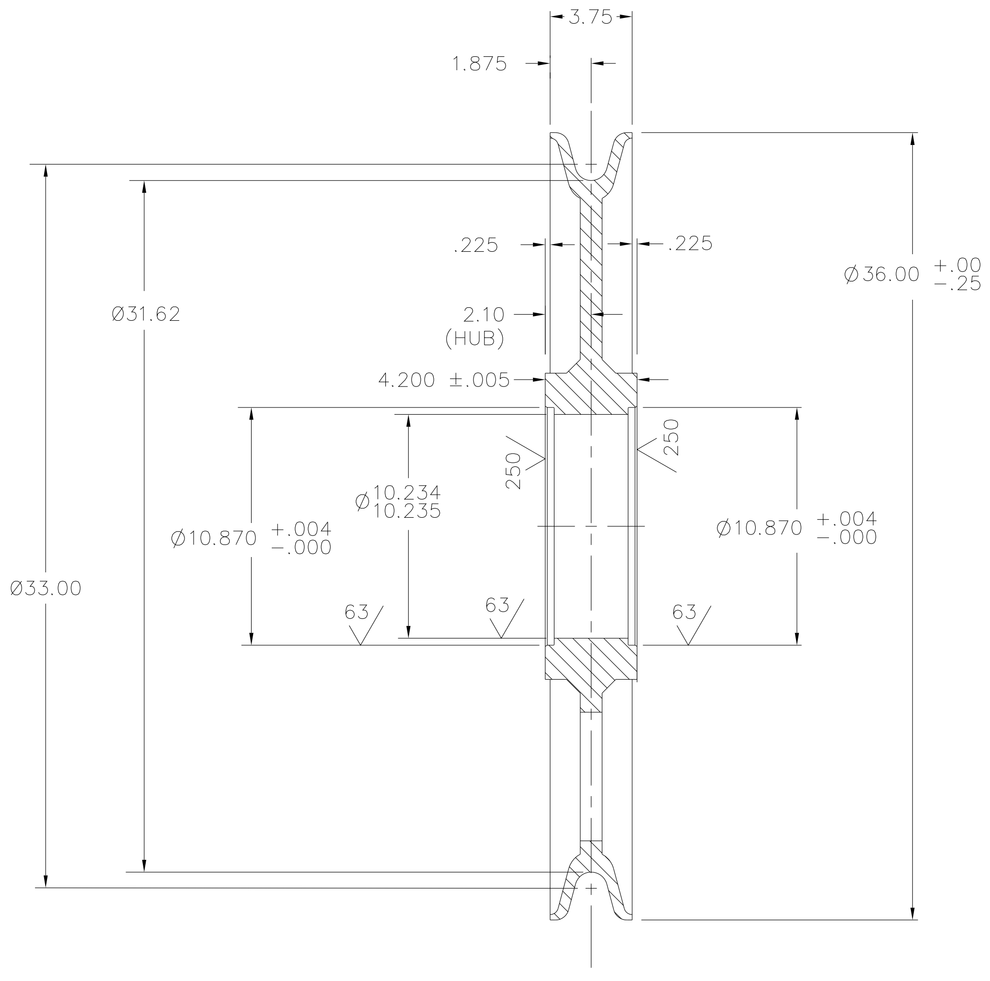

SECTION A-A

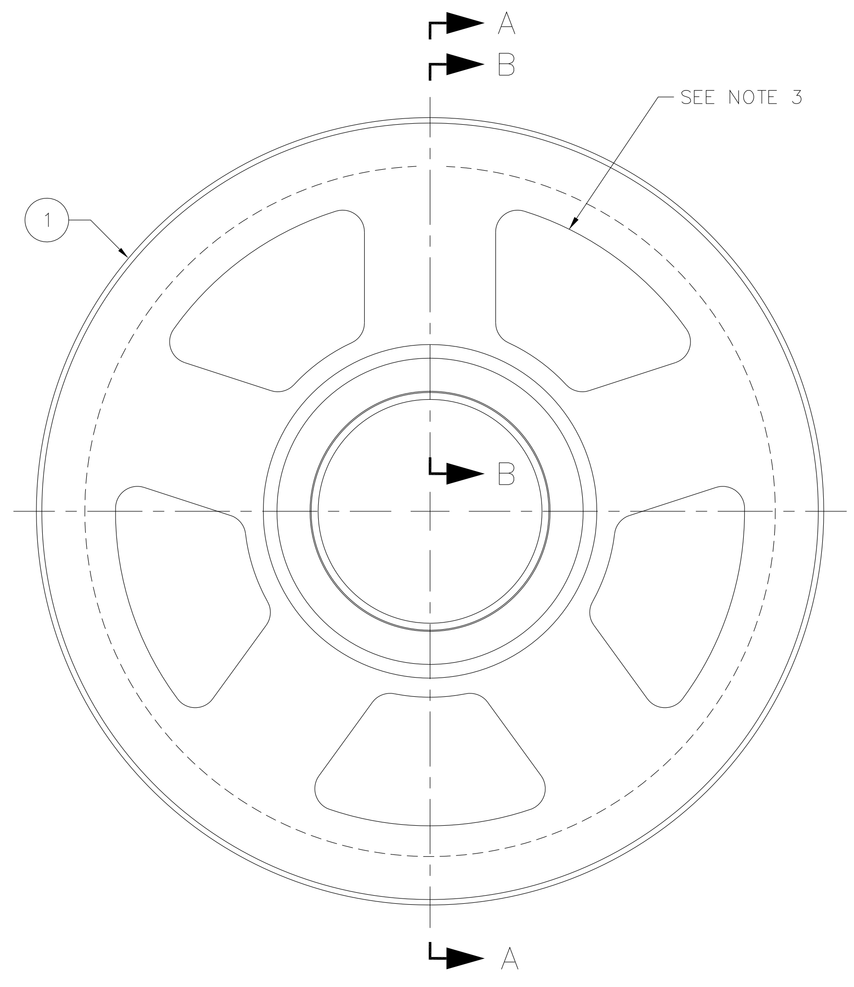

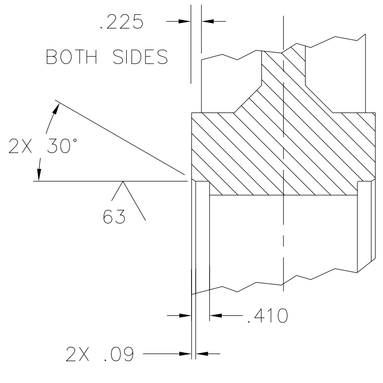

SECTION B-B
SCALE: 1/2

SOURCE CONTROL DRAWING

PART OR IDENTIFYING NO.	QTY REQD	CODE IDENT NO.	DRAWING OR SPECIFICATION	NOMENCLATURE OR DESCRIPTION	REMARKS

PARTS LIST

NOTICE OF CONFIGURATION CONTROL

THIS DRAWING DEFINES AN ITEM OF UNDERWAY REPLENISHMENT (UNREP) STANDARD HARDWARE. NO REVISION TO THIS DRAWING OR THE HARDWARE REPRESENTED BY IT IS AUTHORIZED WITHOUT THE WRITTEN APPROVAL OF THE NAVAL SEA SYSTEMS COMMAND.

APPLICATION	
NEXT ASSY	USED ON
8287514	8287500

MATERIAL:

HUB:
PER ASTM A106
GR B
WEB:
AISI/SAE 1035

UNLESS OTHERWISE SPECIFIED:
ALL DIMENSIONS ARE IN INCHES
TOLERANCES: ANGLES±
FRACTIONS±
DECIMALS
.XX±
.XXX±
BEND RADII
FILLETS & ROUNDS
SURFACE FINISH 125
BREAK ALL SHARP EDGES
INTERPRET DRAWING IN ACCORDANCE WITH STANDARDS PRESCRIBED IN ASME Y14.100
DO NOT SCALE THIS DRAWING

PREPARED	AMSEC	06-07
CHECKED		
TECH LEAD		
BR HD		
ACCEPTED BY NAVSEA		(SIGNATURE DOES NOT DENOTE APPROVAL)
APPROVED FOR NAVSEA		(SIGN ONLY IF ENGINEERING HAS BEEN THROUGHOUT IN MANUFACTURE AND TEST)

PORT HUENEME DIVISION
NAVAL SURFACE WARFARE CENTER
4363 MISSILE WAY
PORT HUENEME, CA 93043-4307

DEPARTMENT OF THE NAVY
NAVAL SEA SYSTEMS COMMAND
WASHINGTON,D.C. 20376-5160

HEAVY UNREP-NAVY STANDARD
RAM TENSIONER

SHEAVE

SIZE	CAGE CODE	NAVSEA DWG. NO.	REV
F	53711	8287589	-

SCALE 1/4 | UNIT WT APPROX 388 LBS | SHEET 1 OF 1

8287589

DISTRIBUTION STATEMENT C: DISTRIBUTION AUTHORIZED TO U.S. GOVERNMENT AGENCIES AND THEIR CONTRACTORS; OTHER REQUESTS MUST BE REFERRED TO COMNAVSEA OR THE COGNIZANT NAVSEA CODE.

WARNING: THIS DOCUMENT CONTAINS TECHNICAL DATA WHOSE EXPORT IS RESTRICTED BY THE ARMS EXPORT CONTROL ACT (TITLE 22, U.S.C. SEC. 2751 ET SEQ.) OR EXECUTIVE ORDER 12470. VIOLATIONS OF THESE EXPORT LAWS ARE SUBJECT TO SEVERE CRIMINAL PENALTIES.

DESTRUCTION NOTICE: DESTROY BY ANY METHOD THAT WILL PREVENT DISCLOSURE OF CONTENTS OR RECONSTRUCTION OF THE DOCUMENT.

NSWC 4120/1A (REV. 03-92)

REVISIONS				
ZONE	LTR	DESCRIPTION	DATE	APPROVED

SUGGESTED SOURCE(S) OF SUPPLY			
SUPPLIER/VENDOR DATA			
CAGE	PART/DRAWING NUMBER	NAME & ADDRESS	APPLICATION
99565	H849-6-SS	COMBINATION PUMP VALVE CO 851 NORTH PRESTON ST PHILADELPHIA, PA 19104-1563	HEAVY UNREP NAVY STANDARD RAM TENSIONER
79926	AP6U	SSP FITTINGS CORP. 8250 BOYLE PARKWAY TWINSBURG, OH 44087	HEAVY UNREP NAVY STANDARD RAM TENSIONER

NOTES:

1. IDENTIFICATION OF THE "SUGGESTED SOURCE(S) OF SUPPLY" HEREON IS NOT TO BE CONSTRUED AS A GUARANTEE OF PRESENT OR CONTINUED AVAILABILITY AS A SOURCE OF SUPPLY FOR THE ITEM DESCRIBED ON THE DRAWING.
2. THE SUGGESTED SOURCE(S) LISTED ARE NOT INTENDED TO REPRESENT THE ONLY SOURCE(S) FOR THE ITEM(S).
3. CONNECTOR ASSEMBLIES SHALL BE RATED FOR 6000 PSIG WORKING PRESSURE.
4. THE UNION BODY END FOR TAILPIECE/SLEEVE SHALL HAVE FACE GROOVE FOR 7/16 IN ID X 1/16 IN WIDE O-RING, (SAE AS568-013).
5. PRE-INSERTED SIL BRAZE RING (MATERIAL: GRADE V OR VII SIL-BRAZE ALLOY IN ACCORDANCE WITH QQ-B-654) SHALL BE PROVIDED IN THE BOTTOM OF THE UNION AND TAIL PIECE SLEEVE SOCKETS.
6. ELBOW ASSEMBLY SHALL BE PROVIDED WITHOUT O-RINGS.

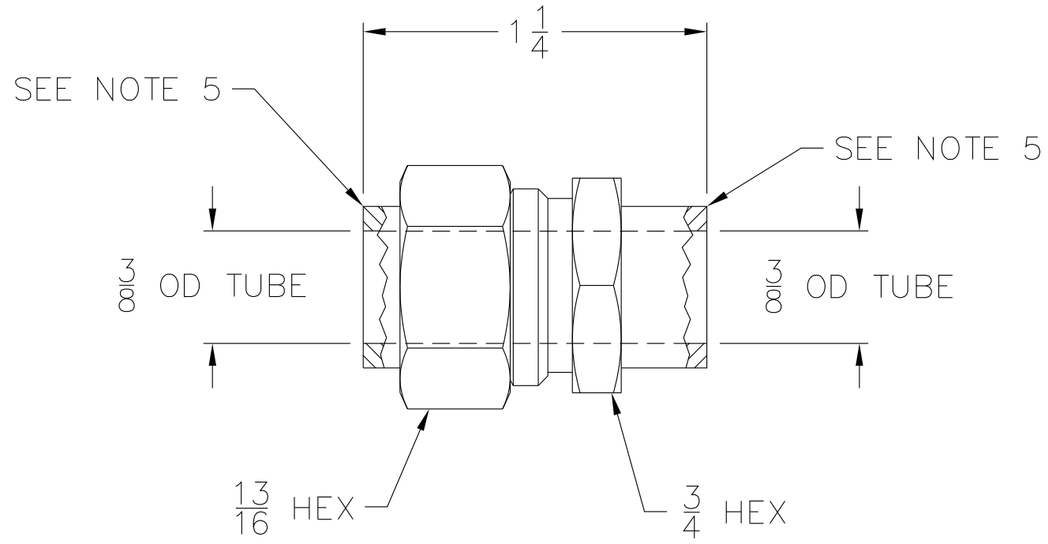

8287590

SPECIFICATION CONTROL DRAWING

PART OR IDENTIFYING NO.	QTY REQD	CODE IDENT NO.	DRAWING OR SPECIFICATION	NOMENCLATURE OR DESCRIPTION	REMARKS

PARTS LIST

DISTRIBUTION STATEMENT C: DISTRIBUTION AUTHORIZED TO U.S. GOVERNMENT AGENCIES AND THEIR CONTRACTORS; OTHER REQUESTS MUST BE REFERRED TO COMNAVSEA OR THE COGNIZANT NAVSEA CODE.

WARNING: THIS DOCUMENT CONTAINS TECHNICAL DATA WHOSE EXPORT IS RESTRICTED BY THE ARMS EXPORT CONTROL ACT (TITLE 22, U.S.C. SEC. 2751 ET SEQ.) OR EXECUTIVE ORDER 12470. VIOLATIONS OF THESE EXPORT LAWS ARE SUBJECT TO SEVERE CRIMINAL PENALTIES.

DESTRUCTION NOTICE: DESTROY BY ANY METHOD THAT WILL PREVENT DISCLOSURE OF CONTENTS OR RECONSTRUCTION OF THE DOCUMENT.

NOTICE OF CONFIGURATION CONTROL

THIS DRAWING DEFINES AN ITEM OF UNDERWAY REPLENISHMENT (UNREP) STANDARD HARDWARE. NO REVISION TO THIS DRAWING OR THE HARDWARE REPRESENTED BY IT IS AUTHORIZED WITHOUT THE WRITTEN APPROVAL OF THE NAVAL SEA SYSTEMS COMMAND.

APPLICATION	
NEXT ASSY	USED ON
8287551	8287500
8287558	

MATERIAL:
CRES 316

UNLESS OTHERWISE SPECIFIED:
ALL DIMENSIONS ARE IN INCHES
TOLERANCES: ANGLES±
FRACTIONS±
DECIMALS
.XX±
.XXX±
BEND RADII
FILLETS & ROUNDS
SURFACE FINISH √
BREAK ALL SHARP EDGES

INTERPRET DRAWING IN ACCORDANCE WITH STANDARDS PRESCRIBED IN ASME Y14.100

DO NOT SCALE THIS DRAWING

PORT HUENEME DIVISION
NAVAL SURFACE WARFARE CENTER
4363 MISSILE WAY
PORT HUENEME, CA 93043-4307

PREPARED	AMSEC	06-07
CHECKED		
TECH LEAD		
BR HD		
ACCEPTED BY NAVSEA		(SIGNATURE DOES NOT DENOTE APPROVAL)
APPROVED FOR NAVSEA		(SIGN ONLY IF ENGINEERING HAS BEEN "PROVED" BY MANUFACTURE AND TEST)

DEPARTMENT OF THE NAVY
NAVAL SEA SYSTEMS COMMAND
WASHINGTON, D.C. 20376-5160

HEAVY UNREP-NAVY STANDARD
RAM TENSIONER

TUBE TO TUBE UNION CONNECTOR

SIZE	CAGE CODE	NAVSEA DWG NO.	REV
C	53711	8287590	—

SCALE NONE | UNIT WEIGHT: .5 LB | SHEET 1 OF 1

NSWC 4120/4 (REV. 03-92)

REVISIONS				
ZONE	LTR	DESCRIPTION	DATE	APPROVED

SUGGESTED SOURCE(S) OF SUPPLY				
SUPPLIER/VENDOR DATA				
CAGE	DASH NUMBER	PART/DRAWING NUMBER	NAME & ADDRESS	APPLICATION
99565	-1	H820-6-SS	COMBINATION PUMP VALVE CO 851 NORTH PRESTON ST PHILADELPHIA, PA 19104-1563	HEAVY UNREP NAVY STANDARD RAM TENSIONER
	-2	H820-8-SS		
79926	-1	AP6E	SSP FITTINGS CORP. 8250 BOYLE PARKWAY TWINSBURG, OH 44087	HEAVY UNREP NAVY STANDARD RAM TENSIONER
	-2	AP8E		

NOTES:

1. IDENTIFICATION OF THE "SUGGESTED SOURCE(S) OF SUPPLY" HEREON IS NOT TO BE CONSTRUED AS A GUARANTEE OF PRESENT OR CONTINUED AVAILABILITY AS A SOURCE OF SUPPLY FOR THE ITEM DESCRIBED ON THE DRAWING.
2. THE SUGGESTED SOURCE(S) LISTED ARE NOT INTENDED TO REPRESENT THE ONLY SOURCE(S) FOR THE ITEM(S).
3. CONNECTOR ASSEMBLIES SHALL BE RATED FOR 6000 PSIG WORKING PRESSURE.
4. THE ELBOW BODY ENDS SHALL HAVE FACE GROVES 7/16 IN ID X 1/16 IN WIDE O-RING AND 9/16 IN ID X 1/16 IN WIDE O-RING, (SAE AS568-013 & 015), RESPECTIVELY.
5. PRE-INSERTED SIL BRAZE RING (MATERIAL: GRADE V OR VII SIL-BRAZE ALLOY IN ACCORDANCE WITH QQ-B-654) SHALL BE PROVIDED IN THE BOTTOM OF THE TAIL PIECE SLEEVE SOCKET.
6. ELBOW ASSEMBLY SHALL BE PROVIDED WITHOUT O-RINGS.

TABLE A			
DASH NO.	DIMENSIONS		
	A-SOCKET TUBE SIZE	B HEX	C LENGTH
-1	3/8	13/16	1 1/2
-2	1/2	15/16	1 11/16

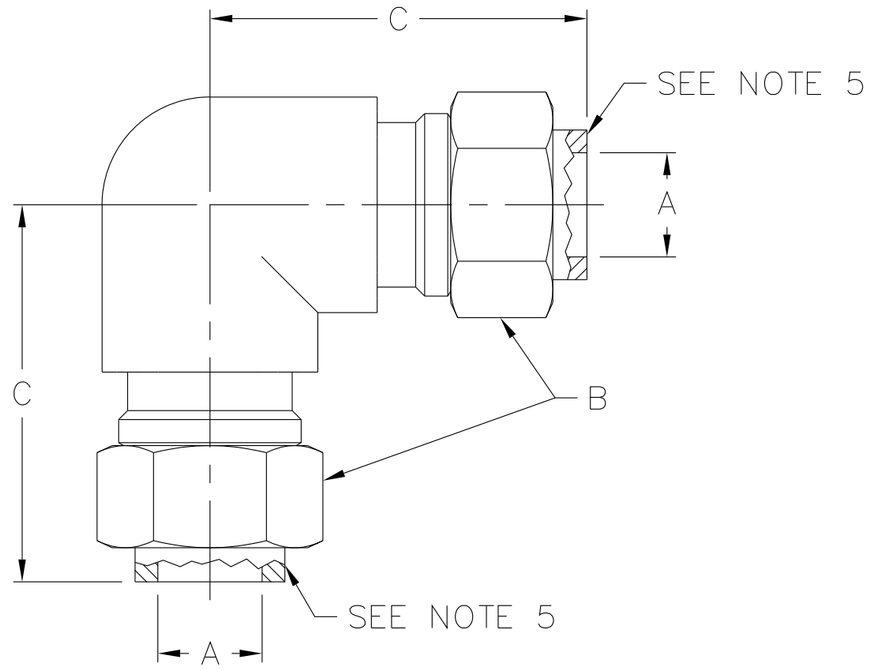

SPECIFICATION CONTROL DRAWING

PART OR IDENTIFYING NO.	QTY REQD	CODE IDENT NO.	DRAWING OR SPECIFICATION	NOMENCLATURE OR DESCRIPTION	REMARKS

PARTS LIST

DISTRIBUTION STATEMENT C: DISTRIBUTION AUTHORIZED TO U.S. GOVERNMENT AGENCIES AND THEIR CONTRACTORS; OTHER REQUESTS MUST BE REFERRED TO COMNAVSEA OR THE COGNIZANT NAVSEA CODE.

WARNING: THIS DOCUMENT CONTAINS TECHNICAL DATA WHOSE EXPORT IS RESTRICTED BY THE ARMS EXPORT CONTROL ACT (TITLE 22, U.S.C. SEC. 2751 ET SEQ.) OR EXECUTIVE ORDER 12470. VIOLATIONS OF THESE EXPORT LAWS ARE SUBJECT TO SEVERE CRIMINAL PENALTIES.

DESTRUCTION NOTICE: DESTROY BY ANY METHOD THAT WILL PREVENT DISCLOSURE OF CONTENTS OR RECONSTRUCTION OF THE DOCUMENT.

NOTICE OF CONFIGURATION CONTROL

THIS DRAWING DEFINES AN ITEM OF UNDERWAY REPLENISHMENT (UNREP) STANDARD HARDWARE. NO REVISION TO THIS DRAWING OR THE HARDWARE REPRESENTED BY IT IS AUTHORIZED WITHOUT THE WRITTEN APPROVAL OF THE NAVAL SEA SYSTEMS COMMAND.

APPLICATION	
NEXT ASSY	USED ON
8287551	8287500
8287557	

MATERIAL:
CRES 316

UNLESS OTHERWISE SPECIFIED:
ALL DIMENSIONS ARE IN INCHES
TOLERANCES: ANGLES±
FRACTIONS±
DECIMALS
.XX±
.XXX±
BEND RADII
FILLETS & ROUNDS
SURFACE FINISH √
BREAK ALL SHARP EDGES

INTERPRET DRAWING IN ACCORDANCE WITH STANDARDS PRESCRIBED IN ASME Y14.100

DO NOT SCALE THIS DRAWING

PORT HUENEME DIVISION NAVAL SURFACE WARFARE CENTER 4363 MISSILE WAY PORT HUENEME, CA 93043-4307		
PREPARED	AMSEC	06-07
CHECKED		
TECH LEAD		
BR HD		
ACCEPTED BY NAVSEA		(SIGNATURE DOES NOT DENOTE APPROVAL)
APPROVED FOR NAVSEA		(SIGN ONLY IF ENGINEERING HAS BEEN "PROVED" BY MANUFACTURE AND TEST)

DEPARTMENT OF THE NAVY
NAVAL SEA SYSTEMS COMMAND
WASHINGTON, D.C. 20376-5160

HEAVY UNREP-NAVY STANDARD
RAM TENSIONER

TUBE TO TUBE ELBOW ASSY

SIZE	CAGE CODE	NAVSEA DWG NO.	REV
C	53711	8287591	-

SCALE NONE | UNIT WEIGHT: .5 LB | SHEET 1 OF 1

8287591 LTR B

NSWC 4120/4 (REV. 03-92)

NOTES:

1. AFTER FABRICATION AND BEFORE ETCHING OR CHEMICAL ENGRAVING, PASSIVATE IN ACCORDANCE WITH ASTM A967. PASSIVATION TREATMENT SHALL BE DETERMINED USING FIGURE X1.1.

2. CAUTION PLATE SHALL BE ETCHED OR CHEMICALLY ENGRAVED IN ACCORDANCE WITH MIL-DTL-15024, TYPE A, WITH BLACK CHARACTERS ON A NATURAL BACKGROUND. WHERE LOCATING DIMENSIONS ARE NOT GIVEN, CHARACTERS AND LINES SHALL BE SYMMETRICAL ON PLATE AS SHOWN. ETCHED OR ENGRAVED AREAS SHALL BE .003 INCH DEEP MINIMUM.

REVISIONS

ZONE	LTR	DESCRIPTION	DATE	APPROVED

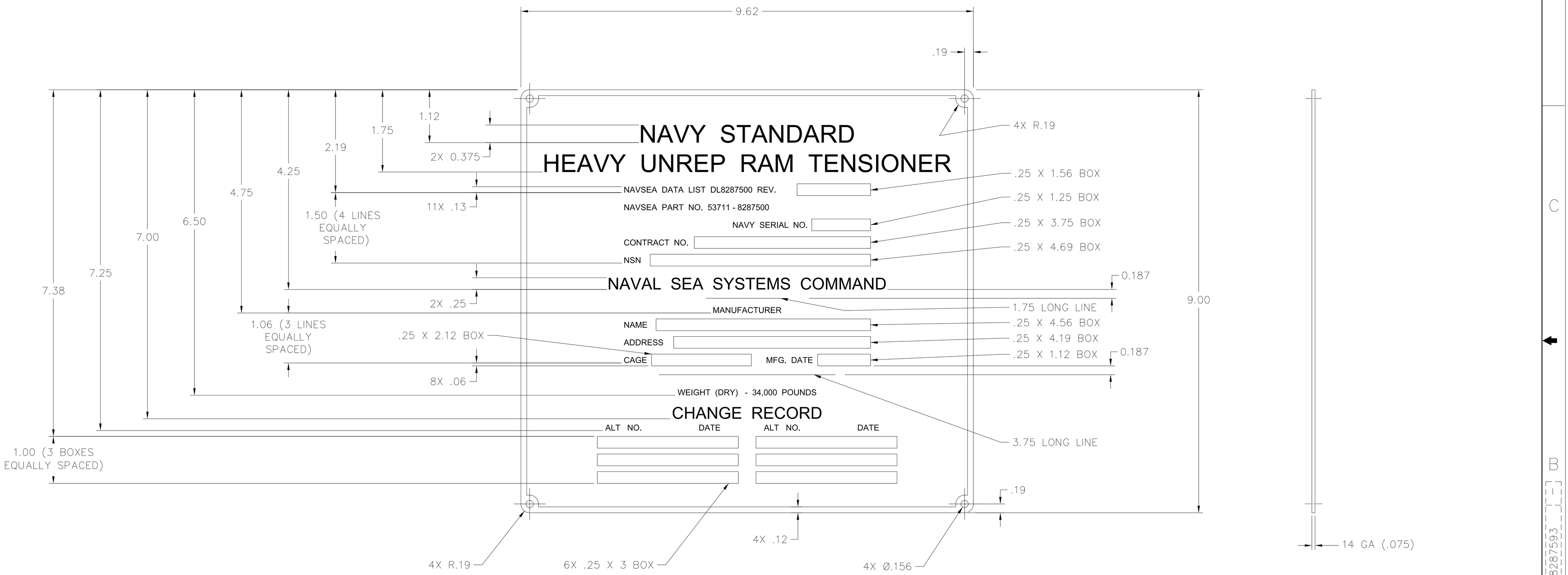

PART OR IDENTIFYING NO.	QTY REQD	CODE IDENT NO.	DRAWING OR SPECIFICATION	NOMENCLATURE OR DESCRIPTION	REMARKS

PARTS LIST

NOTICE OF CONFIGURATION CONTROL

THIS DRAWING DEFINES AN ITEM OF UNDERWAY REPLENISHMENT (UNREP) STANDARD HARDWARE. NO REVISION TO THIS DRAWING OR THE HARDWARE REPRESENTED BY IT IS AUTHORIZED WITHOUT THE WRITTEN APPROVAL OF THE NAVAL SEA SYSTEMS COMMAND.

DISTRIBUTION STATEMENT C: DISTRIBUTION AUTHORIZED TO U.S. GOVERNMENT AGENCIES AND THEIR CONTRACTORS: OTHER REQUESTS MUST BE REFERRED TO COMNAVSEA OR THE COGNIZANT NAVSEA CODE.

WARNING: THIS DOCUMENT CONTAINS TECHNICAL DATA WHOSE EXPORT IS RESTRICTED BY THE ARMS EXPORT CONTROL ACT (TITLE 22, U.S.C. SEC. 2751 ET SEQ.) OR EXECUTIVE ORDER 12470. VIOLATIONS OF THESE EXPORT LAWS ARE SUBJECT TO SEVERE CRIMINAL PENALTIES.

DESTRUCTION NOTICE: DESTROY BY ANY METHOD THAT WILL PREVENT DISCLOSURE OF CONTENTS OR RECONSTRUCTION OF THE DOCUMENT.

APPLICATION	
NEXT ASSY	USED ON
8287501	8287500

MATERIAL:
CRES
TY 316
PER ASTM A240

UNLESS OTHERWISE SPECIFIED:
ALL DIMENSIONS ARE IN INCHES
TOLERANCES: ANGLES±
FRACTIONS±
DECIMALS
.XX± .02
.XXX±
BEND RADII
FILLETS & ROUNDS
250 √
SURFACE FINISH
BREAK ALL SHARP EDGES

INTERPRET DRAWING IN ACCORDANCE WITH STANDARDS PRESCRIBED IN ASME Y14.100

DO NOT SCALE THIS DRAWING

PORT HUENEME DIVISION
NAVAL SURFACE WARFARE CENTER
4363 MISSILE WAY
PORT HUENEME, CA 93043-4307

PREPARED	AMSEC	06-07
CHECKED		
TECH LEAD		
BR HD		
ACCEPTED BY NAVSEA	(SIGNATURE DOES NOT DENOTE APPROVAL)	
APPROVED FOR NAVSEA	(SIGN ONLY IF ENGINEERING HAS BEEN "PROVED" BY MANUFACTURE AND TEST)	

DEPARTMENT OF THE NAVY
NAVAL SEA SYSTEMS COMMAND
WASHINGTON, D.C. 20376-5160

HEAVY UNREP-NAVY STANDARD
RAM TENSIONER

NAME PLATE

SIZE	CAGE CODE	NAVSEA DWG NO.	REV
D	53711	8287593	—

SCALE 1/1 | UNIT WT 1.9 LBS | SHEET 1 OF 1

NSWC 4120/8 (REV 03-92)

REVISIONS				
ZONE	LTR	DESCRIPTION	DATE	APPROVED

APPROVED SOURCE OF SUPPLY			
SUPPLIER/VENDOR DATA			
CODE IDENT	PART/DRAWING NUMBER	NAME & ADDRESS	APPLICATION
48482	1550-6662	PARKER HANNIFIN CORPORATION DBA J M CLIPPER DIVISION ENGINEERED POLYMER SYSTEMS NACOGDOCHES, TX 75964-1297	NAVY STANDARD RAM TENSIONER

NOTES:

1. ONLY THE ITEM DESCRIBED ON THIS DRAWING WHEN PURCHASED FROM THE VENDOR(S) LISTED HEREON IS APPROVED BY THE NAVY FOR USE ON THE APPLICATION(S) SPECIFIED HEREIN. A SUBSTITUTE ITEM SHALL NOT BE USED WITHOUT PRIOR APPROVAL BY THE NAVY.
2. IDENTIFICATION OF THE "APPROVED SOURCE(S) OF SUPPLY" HEREON IS NOT TO BE CONSTRUED AS A GUARANTEE OF PRESENT OR CONTINUED AVAILABILITY AS A SOURCE OF SUPPLY FOR THE ITEM DESCRIBED ON THE DRAWING.
3. ALL MATERIALS USED SHALL BE COMPATIBLE WITH PHOSPHATE ESTER HYDRAULIC FLUID PER MIL-H-19457 (REV C OR LATER).

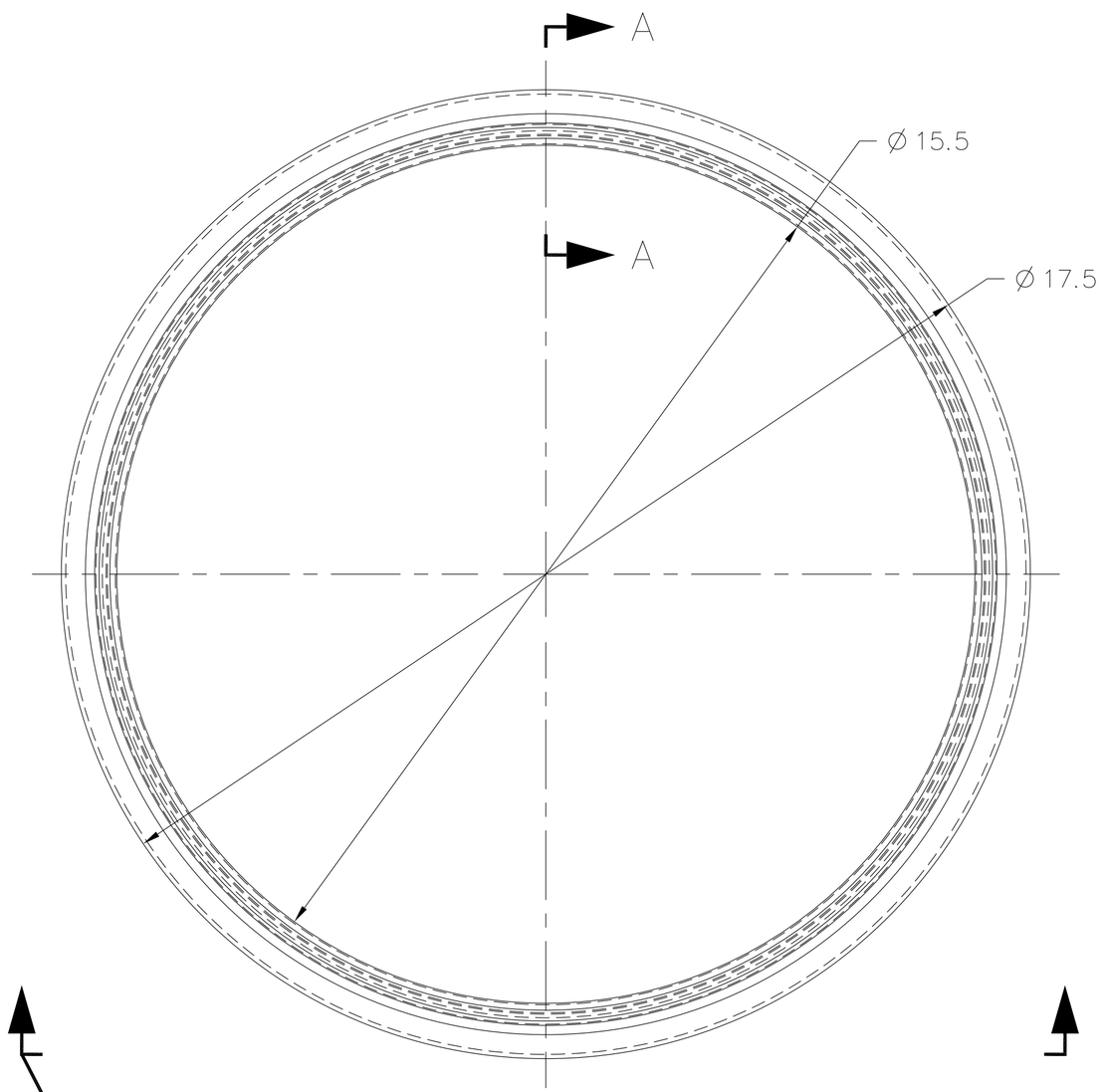

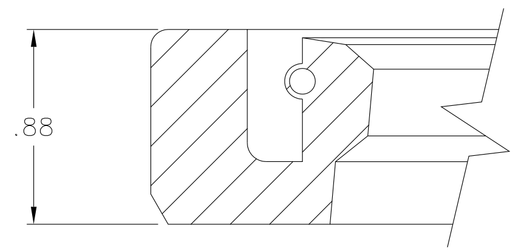

SECTION A-A
SCALE: 2/1

8287594

SOURCE CONTROL DRAWING

PART OR IDENTIFYING NO.	QTY REQD	CODE IDENT NO.	DRAWING OR SPECIFICATION	NOMENCLATURE OR DESCRIPTION	REMARKS

PARTS LIST

NOTICE OF CONFIGURATION CONTROL

THIS DRAWING DEFINES AN ITEM OF UNDERWAY REPLENISHMENT (UNREP) STANDARD HARDWARE. NO REVISION TO THIS DRAWING OR THE HARDWARE REPRESENTED BY IT IS AUTHORIZED WITHOUT THE WRITTEN APPROVAL OF THE NAVAL SEA SYSTEMS COMMAND.

DISTRIBUTION STATEMENT C: DISTRIBUTION AUTHORIZED TO U.S. GOVERNMENT AGENCIES AND THEIR CONTRACTORS: OTHER REQUESTS MUST BE REFERRED TO COMNAVSEA OR THE COGNIZANT NAVSEA CODE.

WARNING: THIS DOCUMENT CONTAINS TECHNICAL DATA WHOSE EXPORT IS RESTRICTED BY THE ARMS EXPORT CONTROL ACT (TITLE 22, U.S.C. SEC. 2751 ET SEQ.) OR EXECUTIVE ORDER 12470. VIOLATIONS OF THESE EXPORT LAWS ARE SUBJECT TO SEVERE CRIMINAL PENALTIES.

DESTRUCTION NOTICE: DESTROY BY ANY METHOD THAT WILL PREVENT DISCLOSURE OF CONTENTS OR RECONSTRUCTION OF THE DOCUMENT.

APPLICATION	
NEXT ASSY	USED ON
8287501	8287500

MATERIAL:
SEE NOTE 3

UNLESS OTHERWISE SPECIFIED:
ALL DIMENSIONS ARE IN INCHES
TOLERANCES: ANGLES± .5°
FRACTIONS±
DECIMALS
.XX±
.XXX± .005
BEND RADII
FILLETS & ROUNDS
SURFACE FINISH √
BREAK ALL SHARP EDGES
INTERPRET DRAWING IN ACCORDANCE WITH STANDARDS PRESCRIBED IN ASME Y14.100
DO NOT SCALE THIS DRAWING

PORT HUENEME DIVISION
NAVAL SURFACE WARFARE CENTER
4363 MISSILE WAY
PORT HUENEME, CA 93043-4307

PREPARED	AMSEC	06-07
CHECKED		
TECH LEAD		
BR HD		
ACCEPTED BY NAVSEA	(SIGNATURE DOES NOT DENOTE APPROVAL)	
APPROVED FOR NAVSEA	(SIGN ONLY IF ENGINEERING HAS BEEN "PROVED" BY MANUFACTURE AND TEST)	

DEPARTMENT OF THE NAVY
NAVAL SEA SYSTEMS COMMAND
WASHINGTON, D.C. 20376-5160

HEAVY UNREP-NAVY STANDARD
RAM TENSIONER

WIPER RING

SIZE	CAGE CODE	NAVSEA DWG NO.	REV
D	53711	8287594	—

SCALE 1/2 OR NOTED | UNIT WT ——— | SHEET 1 OF 1

NSWC 4120/8 (REV 03-92)

REVISIONS				
ZONE	LTR	DESCRIPTION	DATE	APPROVED

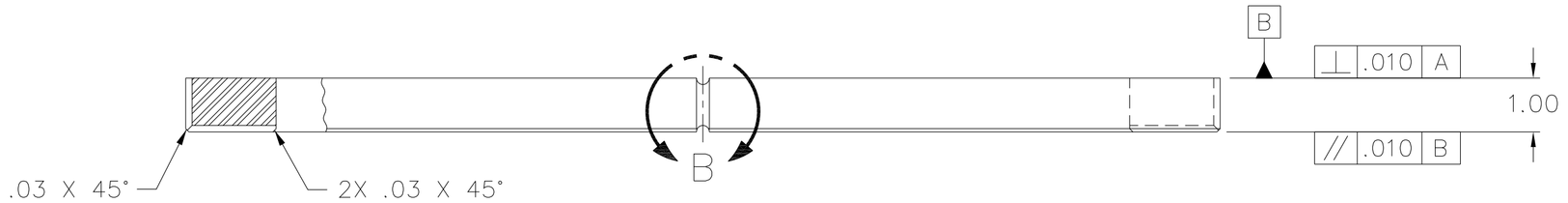

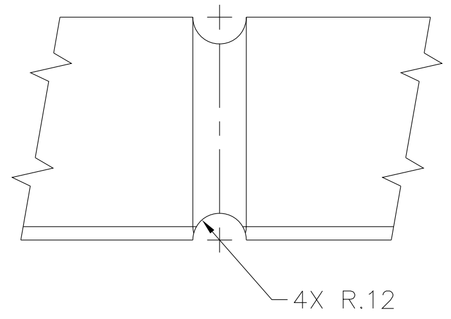

DETAIL B
SCALE: 2/1

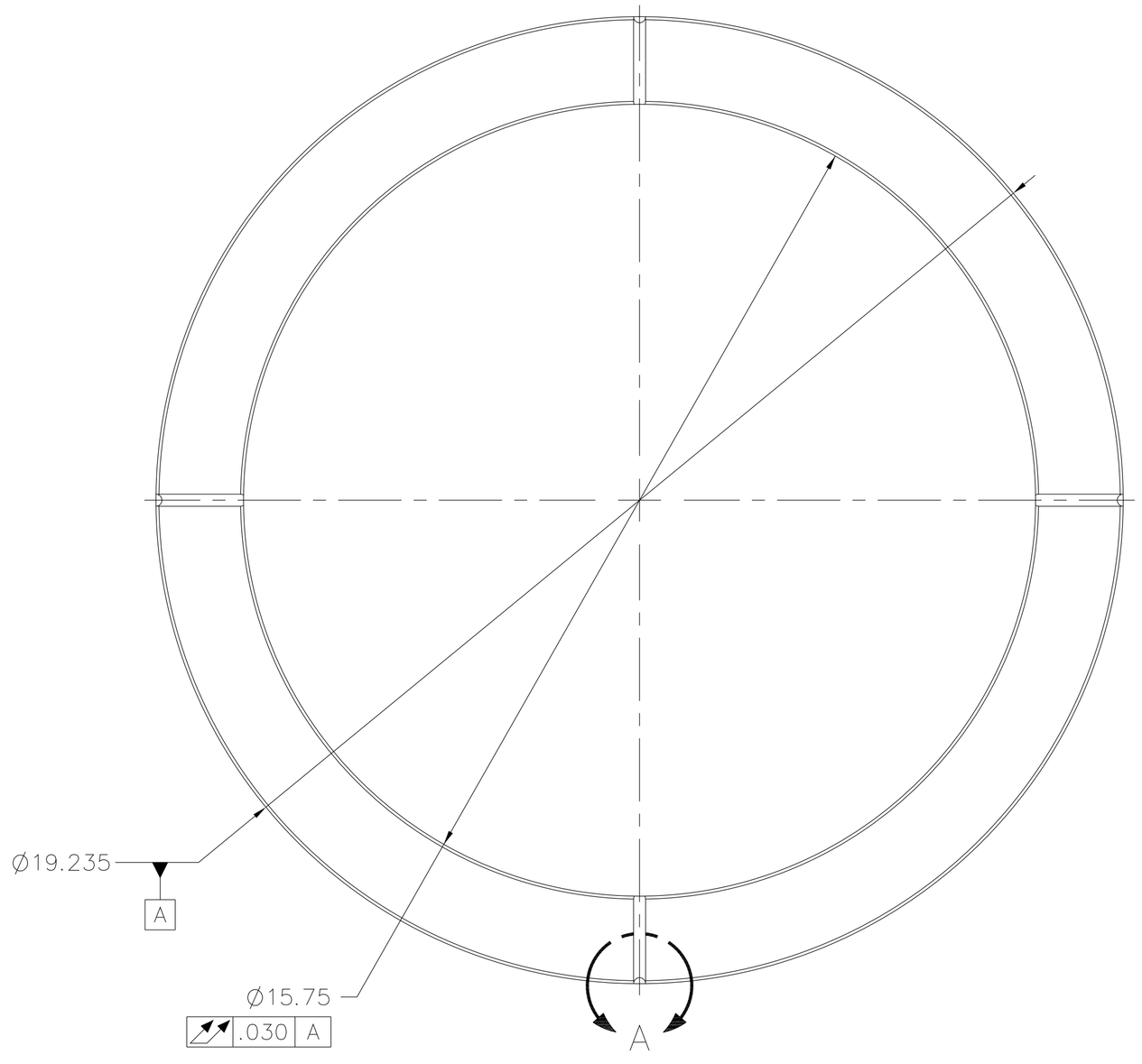

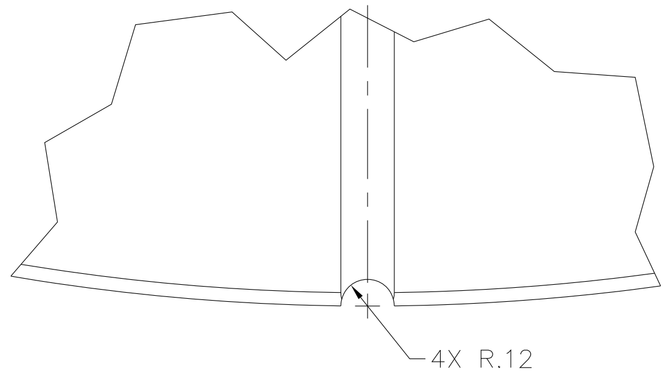

DETAIL A
SCALE: 2/1

NOTICE OF CONFIGURATION CONTROL

THIS DRAWING DEFINES AN ITEM OF UNDERWAY REPLENISHMENT (UNREP) STANDARD HARDWARE. NO REVISION TO THIS DRAWING OR THE HARDWARE REPRESENTED BY IT IS AUTHORIZED WITHOUT THE WRITTEN APPROVAL OF THE NAVAL SEA SYSTEMS COMMAND.

DISTRIBUTION STATEMENT C: DISTRIBUTION AUTHORIZED TO U.S. GOVERNMENT AGENCIES AND THEIR CONTRACTORS; OTHER REQUESTS MUST BE REFERRED TO COMNAVSEA OR THE COGNIZANT NAVSEA CODE.

WARNING: THIS DOCUMENT CONTAINS TECHNICAL DATA WHOSE EXPORT IS RESTRICTED BY THE ARMS EXPORT CONTROL ACT (TITLE 22, U.S.C. SEC. 2751 ET SEQ.) OR EXECUTIVE ORDER 12470. VIOLATIONS OF THESE EXPORT LAWS ARE SUBJECT TO SEVERE CRIMINAL PENALTIES.

DESTRUCTION NOTICE: DESTROY BY ANY METHOD THAT WILL PREVENT DISCLOSURE OF CONTENTS OR RECONSTRUCTION OF THE DOCUMENT.

APPLICATION	
NEXT ASSY	USED ON
8287501	8287500

MATERIAL:
STEEL
PER ASTM A36
OR
LOW ALLOY HIGH
STRENGTH STEEL
PER ASTM A572
OR ASTM A588
GRADE B

PART OR IDENTIFYING NO.	QTY REQD	CODE IDENT NO.	DRAWING OR SPECIFICATION	NOMENCLATURE OR DESCRIPTION	REMARKS

PARTS LIST

UNLESS OTHERWISE SPECIFIED:
ALL DIMENSIONS ARE IN INCHES
TOLERANCES: ANGLES± .5°
FRACTIONS±
DECIMALS
.XX± .02
.XXX± .005
BEND RADII
FILLETS & ROUNDS 250/
SURFACE FINISH √
BREAK ALL SHARP EDGES
INTERPRET DRAWING IN ACCORDANCE WITH STANDARDS PRESCRIBED IN ASME Y14.100
DO NOT SCALE THIS DRAWING

PORT HUENEME DIVISION
NAVAL SURFACE WARFARE CENTER
4363 MISSILE WAY
PORT HUENEME, CA 93043-4307

PREPARED	AMSEC	10-09
CHECKED	M. PEREZ	10-09
TECH LEAD	J. BROWN	10-09
BR HD		
ACCEPTED BY NAVSEA	(SIGNATURE DOES NOT DENOTE APPROVAL)	
APPROVED FOR NAVSEA	(SIGN ONLY IF ENGINEERING HAS BEEN "PROVED" BY MANUFACTURE AND TEST)	

DEPARTMENT OF THE NAVY
NAVAL SEA SYSTEMS COMMAND
WASHINGTON, D.C. 20376-5160

HEAVY UNREP-NAVY STANDARD
RAM TENSIONER

UPPER RAM SPRING RING

SIZE	CAGE CODE	NAVSEA DWG NO.	REV
D	53711	8287595	—

SCALE 1/2 | UNIT WT 27.1 LBS | SHEET 1 OF 1

8287595

NSWC 4120/8 (REV 03-92)

REVISIONS				
ZONE	LTR	DESCRIPTION	DATE	APPROVED

SUGGESTED SOURCE(S) OF SUPPLY				
SUPPLIER/VENDOR DATA				
CAGE	DASH NUMBER	PART/DRAWING NUMBER	NAME & ADDRESS	APPLICATION
99565	-1	H859-6-6-SS	COMBINATION PUMP VALVE CO 851 NORTH PRESTON ST PHILADELPHIA, PA 19104-1563	HEAVY UNREP NAVY STANDARD RAM TENSIONER
	-2	H859-8-8-SS		
79926	-1	AP6-6GC	SSP FITTINGS CORP. 8250 BOYLE PARKWAY TWINSBURG, OH 44087	HEAVY UNREP NAVY STANDARD RAM TENSIONER
	-2	AP8-8GC		

NOTES:

1. IDENTIFICATION OF THE "SUGGESTED SOURCE(S) OF SUPPLY" HEREON IS NOT TO BE CONSTRUED AS A GUARANTEE OF PRESENT OR CONTINUED AVAILABILITY AS A SOURCE OF SUPPLY FOR THE ITEM DESCRIBED ON THE DRAWING.
2. THE SUGGESTED SOURCE(S) LISTED ARE NOT INTENDED TO REPRESENT THE ONLY SOURCE(S) FOR THE ITEM(S).
3. CONNECTOR ASSEMBLIES SHALL BE RATED FOR 6000 PSIG WORKING PRESSURE.
4. THE CONNECTOR BODY FOR -1 AND -2 TAILPIECE/SLEEVES SHALL HAVE FACE GROOVES FOR 7/16 IN ID X 1/16 IN WIDE O-RING AND 9/16 IN ID X 1/16 IN WIDE O-RING, (SAE AS568-013 & 015), RESPECTIVELY.
5. PRE-INSERTED SIL BRAZE RING (MATERIAL: GRADE V OR VII SIL-BRAZE ALLOY IN ACCORDANCE WITH QQ-B-654) SHALL BE PROVIDED IN THE BOTTOM OF THE TAIL PIECE SLEEVE SOCKET.
6. CONNECTOR ASSEMBLY SHALL BE PROVIDED WITHOUT O-RINGS.

TABLE A

DASH NO.	DIMENSIONS					
	A SOCKET TUBE OD	B HEX	C HEX	D GROOVE FOR	E THREAD	F LENGTH
-1	3/8	13/16	3/4	SAE AS568-906 O-RING	9/16-18UNF-2A	1 5/8
-2	1/2	15/16	7/8	SAE AS568-908 O-RING	3/4-16UNF-2A	1 13/16

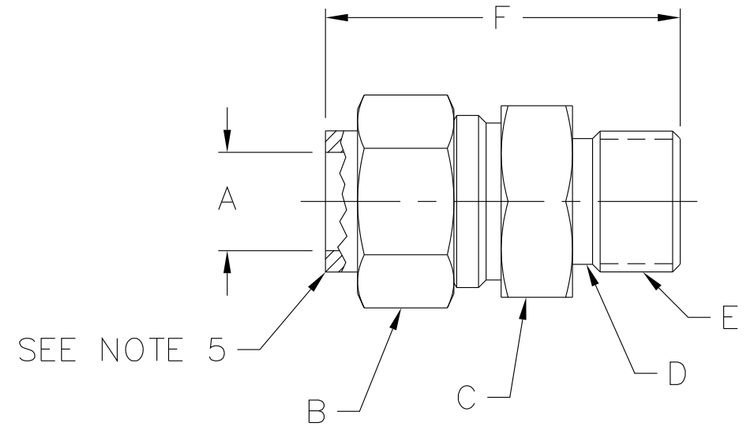

SPECIFICATION CONTROL DRAWING

PART OR IDENTIFYING NO.	QTY REQD	CODE IDENT NO.	DRAWING OR SPECIFICATION	NOMENCLATURE OR DESCRIPTION	REMARKS

PARTS LIST

DISTRIBUTION STATEMENT C: DISTRIBUTION AUTHORIZED TO U.S. GOVERNMENT AGENCIES AND THEIR CONTRACTORS; OTHER REQUESTS MUST BE REFERRED TO COMNAVSEA OR THE COGNIZANT NAVSEA CODE.

WARNING: THIS DOCUMENT CONTAINS TECHNICAL DATA WHOSE EXPORT IS RESTRICTED BY THE ARMS EXPORT CONTROL ACT (TITLE 22, U.S.C. SEC. 2751 ET SEQ.) OR EXECUTIVE ORDER 12470. VIOLATIONS OF THESE EXPORT LAWS ARE SUBJECT TO SEVERE CRIMINAL PENALTIES.

DESTRUCTION NOTICE: DESTROY BY ANY METHOD THAT WILL PREVENT DISCLOSURE OF CONTENTS OR RECONSTRUCTION OF THE DOCUMENT.

NOTICE OF CONFIGURATION CONTROL

THIS DRAWING DEFINES AN ITEM OF UNDERWAY REPLENISHMENT (UNREP) STANDARD HARDWARE. NO REVISION TO THIS DRAWING OR THE HARDWARE REPRESENTED BY IT IS AUTHORIZED WITHOUT THE WRITTEN APPROVAL OF THE NAVAL SEA SYSTEMS COMMAND.

APPLICATION	
NEXT ASSY	USED ON
8287534	8287500
8287554	
8287557	

MATERIAL: CRES 316

UNLESS OTHERWISE SPECIFIED:
ALL DIMENSIONS ARE IN INCHES
TOLERANCES: ANGLES±
FRACTIONS±
DECIMALS
.XX±
.XXX±
BEND RADII
FILLETS & ROUNDS
SURFACE FINISH √
BREAK ALL SHARP EDGES

INTERPRET DRAWING IN ACCORDANCE WITH STANDARDS PRESCRIBED IN ASME Y14.100

DO NOT SCALE THIS DRAWING

PORT HUENEME DIVISION
NAVAL SURFACE WARFARE CENTER
4363 MISSILE WAY
PORT HUENEME, CA 93043-4307

PREPARED	AMSEC	10-09
CHECKED	M. PEREZ	10-09
TECH LEAD	J. BROWN	10-09
BR HD		
ACCEPTED BY NAVSEA	(SIGNATURE DOES NOT DENOTE APPROVAL)	
APPROVED FOR NAVSEA	(SIGN ONLY IF ENGINEERING HAS BEEN "PROVED" BY MANUFACTURE AND TEST)	

DEPARTMENT OF THE NAVY
NAVAL SEA SYSTEMS COMMAND
WASHINGTON, D.C. 20376-5160

HEAVY UNREP - NAVY STANDARD
RAM TENSIONER

TUBE TO STRAIGHT THREAD CONNECTOR ASSEMBLY

SIZE	CAGE CODE	NAVSEA DWG NO.	REV
C	53711	8287596	—

SCALE NONE | UNIT WEIGHT: .13 LB | SHEET 1 OF 1

8287596 I

NSWC 4120/4 (REV. 03-92)

REVISIONS				
ZONE	LTR	DESCRIPTION	DATE	APPROVED

SUGGESTED SOURCE(S) OF SUPPLY			
SUPPLIER/VENDOR DATA			
CAGE	PART/DRAWING NUMBER	NAME & ADDRESS	APPLICATION
97399	10F758-MS	DRAGON VALVES, INC 13457 EXCELSIOR DRIVE P.O. BOX 489 NORWALK, CA 90650	NAVY STANDARD RAM TENSIONER

NOTES:

1. IDENTIFICATION OF THE "SUGGESTED SOURCE(S) OF SUPPLY" HEREON IS NOT TO BE CONSTRUED AS A GUARANTEE OF PRESENT OR CONTINUED AVAILABILITY AS A SOURCE OF SUPPLY FOR THE ITEM DESCRIBED ON THE DRAWING.
2. THE SUGGESTED SOURCE(S) LISTED ARE NOT INTENDED TO REPRESENT THE ONLY SOURCE(S) FOR THE ITEM(S).
3. ALL MATERIALS USED SHALL BE COMPATIBLE WITH PHOSPHATE ESTER HYDRAULIC FLUID PER MIL-H-19457 (REV C OR LATER). VALVE SHALL HAVE A STAINLESS STEEL BODY AND A MONEL STEM.
4. VALVE SHALL BE RATED FOR A PRESSURE OF 2500 PSI MINIMUM AND SHALL WITHSTAND A MINIMUM HYDROSTATIC SHELL TEST PRESSURE OF 3750 PSI.
5. VALVE SHALL OPEN AND CLOSE FULLY WITH A TANGENTIAL FORCE AT THE HANDLE OF 50 POUNDS OR LESS.
6. VALVE SHALL BE SHUTOFF OR NEEDLE TYPE AND SHALL BE SUPPLIED WITH A FLOW DIRECTION ARROW AS SHOWN.
7. VALVE SHALL HAVE A MINIMUM FLOW COEFFICIENT (Cv) OF 1.0 WITH VALVE FULLY OPEN.

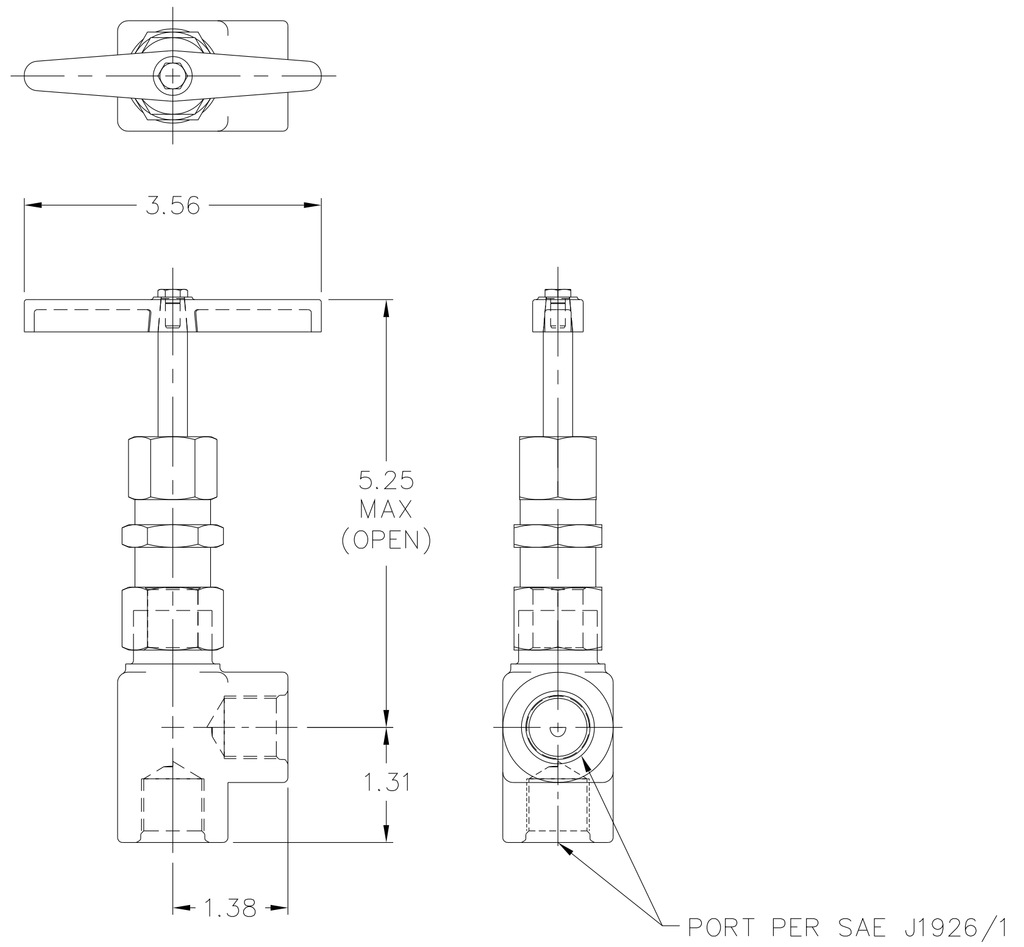

ANGLE BODY
FEMALE & FEMALE STRAIGHT THREAD

SPECIFICATION CONTROL DRAWING

PART OR IDENTIFYING NO.	QTY REQD	CODE IDENT NO.	DRAWING OR SPECIFICATION	NOMENCLATURE OR DESCRIPTION	REMARKS

PARTS LIST

NOTICE OF CONFIGURATION CONTROL

THIS DRAWING DEFINES AN ITEM OF UNDERWAY REPLENISHMENT (UNREP) STANDARD HARDWARE. NO REVISION TO THIS DRAWING OR THE HARDWARE REPRESENTED BY IT IS AUTHORIZED WITHOUT THE WRITTEN APPROVAL OF THE NAVAL SEA SYSTEMS COMMAND.

DISTRIBUTION STATEMENT C: DISTRIBUTION AUTHORIZED TO U.S. GOVERNMENT AGENCIES AND THEIR CONTRACTORS: OTHER REQUESTS MUST BE REFERRED TO COMNAVSEA OR THE COGNIZANT NAVSEA CODE.

WARNING: THIS DOCUMENT CONTAINS TECHNICAL DATA WHOSE EXPORT IS RESTRICTED BY THE ARMS EXPORT CONTROL ACT (TITLE 22, U.S.C. SEC. 2751 ET SEQ.) OR EXECUTIVE ORDER 12470. VIOLATIONS OF THESE EXPORT LAWS ARE SUBJECT TO SEVERE CRIMINAL PENALTIES.

DESTRUCTION NOTICE: DESTROY BY ANY METHOD THAT WILL PREVENT DISCLOSURE OF CONTENTS OR RECONSTRUCTION OF THE DOCUMENT.

APPLICATION	
NEXT ASSY	USED ON
8287500	8287500

MATERIAL: CRES 316 SST

UNLESS OTHERWISE SPECIFIED:
ALL DIMENSIONS ARE IN INCHES
TOLERANCES: ANGLES±
FRACTIONS±
DECIMALS
.XX±
.XXX±
BEND RADII
FILLETS & ROUNDS
SURFACE FINISH ✓
BREAK ALL SHARP EDGES
INTERPRET DRAWING IN ACCORDANCE WITH STANDARDS PRESCRIBED IN ASME Y14.100
DO NOT SCALE THIS DRAWING

PORT HUENEME DIVISION
NAVAL SURFACE WARFARE CENTER
4363 MISSILE WAY
PORT HUENEME, CA 93043-4307

PREPARED	AMSEC	10-09
CHECKED	M. PEREZ	10-09
TECH LEAD	J. BROWN	10-09
BR HD		
ACCEPTED BY NAVSEA	(SIGNATURE DOES NOT DENOTE APPROVAL)	
APPROVED FOR NAVSEA	(SIGN ONLY IF ENGINEERING HAS BEEN "PROVED" BY MANUFACTURE AND TEST)	

DEPARTMENT OF THE NAVY
NAVAL SEA SYSTEMS COMMAND
WASHINGTON, D.C. 20376-5160

HEAVY UNREP-NAVY STANDARD
RAM TENSIONER

GLOBE VALVE
ANGLE BODY

SIZE	CAGE CODE	NAVSEA DWG NO.	REV
D	53711	8287597	—

SCALE 1/1 | UNIT WT 1.1 LBS | SHEET 1 OF 1

8287597

NSWC 4120/8 (REV 03-92)

NOTES:

1. PURPOSE:

1.1 THIS DRAWING WAS DEVELOPED TO PROVIDE THE HIGH PRESSURE COMPRESSED AIR SYSTEM REQUIREMENTS TO SUPPORT HEAVY UNREP RAM TENSIONERS FOR EITHER NEW SHIP OR BACK-FIT INSTALLATIONS.

1.2 THE HEAVY UNREP RAM TENSIONER HP AIR SYSTEM IS DESIGNED TO OPERATE WITH BOTH STREAM AND HEAVY UNREP CAPABLE SHIPS.

2. GENERAL REQUIREMENTS:

2.1 REFERENCE 1 PROVIDES DETAILED PROCEDURES AND DESCRIPTIONS FOR REPLENISHMENT AT SEA OPERATIONS.

2.2 REFERENCES 2 AND 3 ARE THE GOVERNING DOCUMENTS FOR SHIPBOARD REQUIREMENTS FOR BOTH NEW AND MODIFIED INSTALLATIONS RESPECTIVELY.

2.3 REFERENCE 4 PROVIDES THE GUIDANCE TO DESIGN A STANDARD WORKING AIR BANK FOR RAM TENSIONERS AND SHALL BE USED FOR NEW HEAVY UNREP INSTALLATIONS OR TO EXPAND EXISTING AIR BANKS FOR HEAVY UNREP.

2.4 REFERENCE 5 PROVIDES THE GUIDANCE TO DESIGN A STANDARD RESERVE AIR BANK FOR RAM TENSIONERS AND SHALL BE USED FOR NEW HEAVY UNREP INSTALLATIONS OR TO EXPAND EXISTING AIR BANKS FOR HEAVY UNREP.

2.5 A RAM CHARGING STATION SHALL BE PROVIDED FOR EACH RAM TENSIONER. THERE ARE TWO (2) VARIATIONS AVAILABLE: CLOSE-IN OR REMOTE. THE TYPE OF CHARGING STATION USED SHALL BE DETERMINED BY NEW OR EXISTING SHIP CONFIGURATIONS.

2.5.1 THE LOCATION OF THE CHARGING STATION SHALL BE SUCH THAT IT IT DOES NOT INTERFERE WITH OR ENCROACH UPON OTHER UNREP EQUIPMENT WORKING AREAS AND MAINTENANCE ENVELOPES.

2.5.2 REFERENCES 6 AND 7 PROVIDE THE INSTALLATION REQUIREMENTS AND DETAILED ASSEMBLY OF THE CLOSE-IN CHARGING STATION.

2.5.2.1 THE CLOSE-IN CONFIGURATION IS USED WHEN THE CHARGING STATION CAN BE LOCATED FOUR (4) FEET OR LESS FROM THE RAM ACCUMULATOR. IT IS THE PREFERRED ARRANGEMENT.

2.5.3 REFERENCES 8 AND 9 PROVIDE THE INSTALLATION REQUIREMENTS AND DETAILED ASSEMBLY OF THE REMOTE CHARGING STATION.

2.5.3.1 THE REMOTE CONFIGURATION IS USED WHEN THE CHARGING STATION MUST BE LOCATED MORE THAN FOUR (4) FEET FROM THE RAM ACCUMULATOR DUE TO UNREP STATION ARRANGEMENT CONSTRAINTS.

2.6 REFERENCE 10 PROVIDES GUIDANCE FOR PIPING SYSTEM COMPONENT SELECTION ON NAVY SURFACE SHIPS. ONLY COPPER NICKEL ALLOY (CNA) OR CORROSION RESISTING STEEL (CRES) PIPING AND FITTING MATERIALS AS LISTED IN CATEGORY J-2 SHALL BE USED.

2.6.1 REGARDLESS OF OPERATING PRESSURES SHOWN IN TABLE "A", ALL RAM TENSIONER INSTALLATIONS SHALL BE DESIGNED AND INSTALLED USING 3000 PSI MINIMUM RATED PIPE, TUBE, VALVES AND FITTINGS.

2.6.2 FOR NEW SHIP INSTALLATIONS, THE MATERIALS SPECIFIED IN REFERENCES 4 THROUGH 9 SHALL BE USED. THE SHIPS SPECIFICATION OR PROJECT PECULIAR DOCUMENTS WILL DEFINE WHETHER THE SYSTEM IS TO BE CNA OR CRES.

NOTES (CONTINUED):

2.6.3 FOR BACK-FIT INSTALLATIONS THE NEW MATERIALS SHALL BE OF THE SAME COMPOSITION AS THAT OF THE EXISTING HIGH PRESSURE AIR PIPING. SYSTEMS WITH CNA PIPING SHALL REMAIN CNA AND SYSTEMS WITH CRES PIPING SHALL REMAIN CRES. FOR EXISTING CNA SYSTEMS USING SILVER BRAZED JOINTS, ONLY FORGED CNA SOCKET WELD FITTINGS SHALL BE USED AND CAST BRONZE SILVER BRAZED FITTINGS SHALL NO LONGER BE USED.

2.6.4 HIGH PRESSURE VALVES SHALL BE PER MIL-V-24109, WITH SOCKET WELDED CNA OR CRES TAILPIECES PER DRAWING 803-1385884. UNION NUTS SHALL BE MONEL PER DRAWING 803-1385883. O-RINGS SHALL BE "VITON" (FKM) PER SAE-AMS 7276.

2.6.5 SOCKET WELD FITTINGS SHALL BE 3000 PSI RATED PER ASME B16.11. REDUCING INSERTS (BUSHINGS) SHALL BE PER MSS SP-97. UNION TAILPIECES AND THREADPIECES SHALL BE CNA OR CRES PER DRAWING 803-1385884 WITH MONEL UNION NUTS PER DRAWING 803-1385883. O-RINGS SHALL BE "VITON" PER SAE-AMS 7276.

2.7 ALL WELDING, FABRICATION AND INSPECTION OF WELDED PIPE JOINTS SHALL BE IN ACCORDANCE WITH REFERENCE 11, CLASS P-1. PIPE JOINT DESIGN SHALL BE P-14 FOR SOCKET WELDS AND P-68 FOR BRANCH CONNECTIONS IN ACCORDANCE WITH REFERENCE 12.

2.8 ALL P-1 PIPE JOINTS SHALL BE NON-DESTRUCTIVELY TESTED USING METHODS SPECIFIED IN REFERENCE 13.

2.9 UTILIZE PIPE BENDS IN LIEU OF FITTINGS WHEREVER PRACTICABLE. PIPE BENDING SHALL BE IN ACCORDANCE WITH REFERENCE 14. THE MINIMUM BEND RADIUS SHALL BE 5 TIMES THE NOMINAL DIAMETER.

2.10 PAINT ALL NEW PIPING, VALVES, FITTINGS AND APPURTENANCES EXCEPT NAMEPLATES AND PRESSURE GAGES IN ACCORDANCE WITH PROCEDURES SPECIFIED IN REFERENCE 15. ALL VALVES HANDLES SHALL BE PAINTED RED IN LIEU OF HAZE GRAY. ALL GLOBE AND NEEDLE VALVES SHALL BE CLOSED DURING PAINTING TO RETRACT THE WORKING PART OF THE VALVE STEMS. SURFACES UNDER LABEL PLATES SHALL BE PAINTED PRIOR TO INSTALLING LABEL PLATES.

NOTES CONTINUED ON SHEET 2

REFERENCES

NO	TITLE	CAGE CODE	DRAWING NO
1	UNDERWAY REPLENISHMENT	–	NTTP 4.01-4
2	SHIPS SPECIFICATION (FOR NEW CONSTRUCTION)	–	VARIOUS
3	GENERAL SPECIFICATIONS FOR OVERHAUL OF SURFACE SHIPS	–	NAVSEA S9AA0-AB-GOS-010/GSO
4	HEAVY UNREP RAM TENSIONER WORKING AIR BANK PIPING	53711	8288580
5	HEAVY UNREP RAM TENSIONER RESERVE AIR BANK PIPING	53711	8288581
6	HEAVY UNREP RAM TENSIONER CLOSE-IN CHARGING STATION INSTALLATION INTERFACE	53711	8288582
7	HEAVY UNREP RAM TENSIONER CLOSE-IN CHARGING STATION ASSEMBLY	53711	8288583
8	HEAVY UNREP RAM TENSIONER REMOTE CHARGING STATION INSTALLATION INTERFACE	53711	8288584
9	HEAVY UNREP RAM TENSIONER REMOTE CHARGING STATION ASSEMBLY	53711	8288585
10	SCHEDULE OF PIPING, VALVES, FITTINGS & ASSOC PIPING COMPONENTS FOR NAVAL SURFACE SHIPS	53711	MIL-STD-777
11	REQUIREMENTS FOR FABRICATION WELDING AND INSPECTION, AND CASTING INSPECTION AND REPAIR FOR MACHINERY, PIPING AND PRESSURE VESSELS	–	NAVSEA S9074-AR-GIB-010/278
12	WELDED JOINT DESIGN	53711	MIL-STD-22
13	REQUIREMENTS FOR NON-DESTRUCTIVE TESTING METHODS	–	NAVSEA T9074-AS-GIB-010/271
14	BENDING OF PIPE OR TUBE FOR SHIP PIPING SYSTEMS	53711	MIL-STD-1627
15	STANDARD PAINTING PROCEDURES FOR UNREP EQUIPMENT	53711	5210545
16	HANGERS, PIPE FOR SURFACE SHIPS	80064	804-1385781
17	STANDARD PRACTICE FOR CLEANING OF SHIPBOARD COMPRESSED AIR SYSTEMS	53711	MIL-STD-1622
18	CHAPTER 551 COMPRESSED AIR PLANTS AND SYSTEMS	–	NAVSEA S9086-SY-STM-010/CH-551
19	CHAPTER 505 PIPING SYSTEMS	–	NAVSEA S9086-RK-STM-010/CH-505
20	HP AIR RELIEF VALVE 2500 PSI	53711	6243067
21	HP AIR RELIEF VALVE 3000 PSI	53711	6243102
22	HEAVY UNREP RAM TENSIONER SHIPBOARD INSTALLATION INTERFACE	53711	8287600

APPLICATION	WIRE ROPE TENSION (LBS)	HEAVY RAM AIR PRESSURE (PSI)
HEAVY UNREP HIGHLINE	40,000	1900
STREAM HIGHLINE	19,500	930

TABLE A

HEAVY UNREP STATIONS
RAM TENSIONER OPERATING PRESSURES
FOR WORKING AIR BANKS AND RAM TENSIONER CHARGING STATIONS
SEE NOTES 2.13 & 5.5

REVISIONS

ZONE	LTR	DESCRIPTION	DATE	APPROVED

NOTICE OF CONFIGURATION CONTROL

THIS DRAWING DEFINES AN ITEM OF UNDERWAY REPLENISHMENT (UNREP) STANDARD HARDWARE. NO REVISION TO THIS DRAWING OR THE HARDWARE REPRESENTED BY IT IS AUTHORIZED WITHOUT THE WRITTEN APPROVAL OF THE NAVAL SEA SYSTEMS COMMAND.

DISTRIBUTION STATEMENT C: DISTRIBUTION AUTHORIZED TO U.S. GOVERNMENT AGENCIES AND THEIR CONTRACTORS: OTHER REQUESTS MUST BE REFERRED TO COMNAVSEA OR THE COGNIZANT NAVSEA CODE.

WARNING: THIS DOCUMENT CONTAINS TECHNICAL DATA WHOSE EXPORT IS RESTRICTED BY THE ARMS EXPORT CONTROL ACT (TITLE 22, U.S.C. SEC. 2751 ET SEQ.) OR EXECUTIVE ORDER 12470. VIOLATIONS OF THESE EXPORT LAWS ARE SUBJECT TO SEVERE CRIMINAL PENALTIES.

DESTRUCTION NOTICE: DESTROY BY ANY METHOD THAT WILL PREVENT DISCLOSURE OF CONTENTS OR RECONSTRUCTION OF THE DOCUMENT.

6 5 4 3 2 1
SHEET NUMBER
REVISION STATUS OF SHEETS

APPLICATION	
NEXT ASSY	USED ON
8287600	8287600

MATERIAL:

PART OR IDENTIFYING NO.	QTY REQD	CAGE CODE	DRAWING OR SPECIFICATION	NOMENCLATURE OR DESCRIPTION	REMARKS

PARTS LIST

UNLESS OTHERWISE SPECIFIED:
ALL DIMENSIONS ARE IN INCHES
TOLERANCES: ANGLES±
FRACTIONS±
DECIMALS
.XX±
.XXX±
BEND RADII
FILLETS & ROUNDS
SURFACE FINISH √
BREAK ALL SHARP EDGES
INTERPRET DRAWING IN ACCORDANCE WITH STANDARDS PRESCRIBED IN ASME Y14.100
DO NOT SCALE THIS DRAWING

PORT HUENEME DIVISION
NAVAL SURFACE WARFARE CENTER
4363 MISSILE WAY
PORT HUENEME, CA 93043-4307

PREPARED	AMSEC	06-07
CHECKED		
BR HD		
ACCEPTED BY NAVSEA		(SIGNATURE DOES NOT DENOTE APPROVAL)
APPROVED FOR NAVSEA		(SIGN ONLY IF ENGINEERING WAS BEEN "PROVED" BY MANUFACTURE AND TEST)

DEPARTMENT OF THE NAVY
NAVAL SEA SYSTEMS COMMAND
WASHINGTON, D.C. 20376-5160

HEAVY UNREP-NAVY STANDARD
RAM TENSIONER

HP AIR REQUIREMENTS

SIZE	CAGE CODE	NAVSEA DWG. NO.	REV
F	53711	8287599	–

SCALE NONE | UNIT WT – | SHEET 1 OF 4

8287599

NSWC 4120/1A (REV. 03-92)

NOTES (CONTINUED):

2.11 PIPING DESIGNATION AND MARKING SHALL BE IN ACCORDANCE WITH REFERENCES 2 AND 3, SECTION 507.

2.12 PIPE HANGERS SHALL BE INSTALLED IN ACCORDANCE WITH REFERENCE 16 AND SPACED AS FOLLOWS:

PIPE SIZE	MAX SPACING
1/2" AND BELOW	36"
3/4" – 1 1/2"	48"
2" – 3 1/2"	72"

2.12.1 WHERE THIS SPACING DOES NOT PROVIDE A HANGER ADJACENT TO VALVES AND OTHER COMPONENTS SUPPORTED BY PIPING ADDITIONAL HANGERS SHALL BE INSTALLED. HANGERS ARE TO BE INSTALLED AT PIPING RUN TERMINATIONS, AT OPEN ENDED DRAIN OR VENT TERMINALS AND AT BRANCH CONNECTIONS (TEES, LATERALS, BOSSES, ETC). HANGERS ARE NOT REQUIRED AT BULKHEAD/DECK PENETRATIONS AND AT CONNECTIONS TO DECK MOUNTED EQUIPMENT.

2.12.2 PIPE HANGERS SHALL BE LINED WITH SYNTHETIC RUBBER TO MINIMIZE GALVANIC CORROSION.

2.13 PRESSURE GAGE RED SET POINTERS AT HEAVY UNREP WORKING AIR BANKS AND AT RAM CHARGING STATIONS SHALL BE SET TO 1000 PSI. RESERVE AIR BANK PRESSURE GAGE RED SET POINTERS SHALL BE SET TO 3000 PSI.

3. CLEANING REQUIREMENTS:

3.1 ALL CLEANING AND FLUSHING EQUIPMENT, INCLUDING PUMPS, FITTINGS, BLANKS, JUMPER HOSES AND GRADE "B" WATER NECESSARY TO ACCOMPLISH THESE REQUIREMENTS SHALL BE PROVIDED BY THE INSTALLING ACTIVITY.

3.2 AFTER FABRICATION, PIPING SEGMENTS SHALL BE CLEANED IN ACCORDANCE WITH REFERENCES 17 AND 18.

3.3 CLEANING TO BE ACCOMPLISHED IN CONJUNCTION WITH HYDROSTATIC TESTING TO MINIMIZE REMOVAL AND RE-INSTALLATION OF TESTING AND FLUSHING EQUIPMENT.

3.4 FOR BACK-FIT MODIFICATIONS PROVIDE SUITABLE TEMPORARY PLUGS OR CAPS FOR RETAINED PIPING AFTER REMOVAL TO PREVENT FOREIGN MATTER FROM ENTERING SYSTEM OR CONTAMINATION OF SURROUNDING AREA. MAINTAIN SYSTEM CLEANLINESS IN ACCORDANCE WITH REFERENCE 3, SECTION 505J, LEVEL II.

3.4.1 LEVEL II IS DEFINED AS A DEGREE OF CLEANLINESS THAT RESULTS IN A SURFACE VISUALLY FREE OF GREASE, FLUX, SCALE, DIRT, LOOSE PARTICLES AND ANY OTHER CONTAMINATION FOREIGN TO THE BASE METAL.

4. TEST REQUIREMENTS:

4.1 ALL TESTING EQUIPMENT, INCLUDING PUMPS, FITTINGS, GAGES, BLANKS, JUMPER HOSES AND DETECTION SOLUTIONS OR DETECTORS NECESSARY TO ACCOMPLISH THESE REQUIREMENTS SHALL BE PROVIDED BY THE INSTALLING ACTIVITY.

4.1.1 ALL NEW OR MODIFIED PIPING SHALL BE TESTED USING PRECAUTIONS AND PROCEDURES SPECIFIED IN REFERENCES 18 AND 19.

4.1.2 NEW AIR FLASKS OR THOSE REQUIRING RE-CERTIFICATION SHALL BE TESTED AND CERTIFIED IN ACCORDANCE WITH REFERENCE 18. AIR FLASKS SHALL NOT BE HYDROSTATICALLY TESTED.

4.2 HYDROSTATIC STRENGTH TEST:

4.2.1 HYDROSTATICALLY TEST ALL NEW AND MODIFIED HP AIR PIPING TO 4500 PSIG (150% OF RATED PRESSURE OF PIPING SYSTEM COMPONENTS). HOLD PRESSURE A MINIMUM OF 30 MINUTES PRIOR TO INSPECTING FIRST JOINT. INSPECT FOR LEAKS AND WEEPS AND CORRECT ANY DEFICIENCIES FOUND AND RETEST.

4.2.2 THE RAM TENSIONER, AIR FLASKS & EXISTING PIPING UNAFFECTED BY THE UPGRADE SHALL BE ISOLATED FROM THE TESTS. ISOLATION SHALL BE BY MEANS OF BLANK THREADPIECES.

4.2.3 ALL PRESSURE GAGES SHALL BE TEMPORARILY REMOVED AND REPLACED WITH PLUGS OR CALIBRATED 0-5000 PSI GAGES FOR THE DURATION OF THE TEST.

4.2.4 ALL RELIEF VALVES SHALL BE REMOVED AND REPLACED WITH A BLANK THREADPIECE FOR THE TEST.

4.2.5 ALL CHECK VALVES SHALL BE REPLACED WITH THE EQUIVALENT OF AN OPEN VALVE FOR THE HYDROSTATIC TEST OR SHALL HAVE THEIR INTERNALS TEMPORARILY REMOVED. CPV FLUSH PLUG 190-3 MAY BE USED.

4.2.6 THE AIR SYSTEM SHALL BE THOROUGHLY DRIED AFTER COMPLETION OF HYDROSTATIC TESTING BY BLOWING DOWN WITH OIL-FREE AIR OR NITROGEN IN ACCORDANCE WITH REFERENCE 17.

4.2.7 AFTER SATISFACTORY COMPLETION OF THE HYDROSTATIC TEST, RESTORE ALL COMPONENTS TO OPERATIONAL STATUS.

4.3 TIGHTNESS (PRESSURE DROP) TEST:

4.3.1 TEST PIPING FROM HP AIR MAIN TO WORKING AIR BANK CHARGING PANEL AND ALL OF THE RESERVE AIR BANK AS FOLLOWS:

4.3.1.1 CHARGE SYSTEM WITH AIR TO 3000 PSI FOR TIGHTNESS TEST IN ACCORDANCE WITH REFERENCES 18 AND 19. TEST FAILURE OCCURS IF PRESSURE DROP AFTER 24 HOURS EXCEEDS 30 PSI (CORRECTED FOR AMBIENT TEMPERATURE CHANGE). LOCATE ANY LEAKS BY APPLYING LEAK DETECTION SOLUTION (MIL-PRF-25567) OR BY USING AN ULTRASONIC DETECTOR TO INSPECT ALL JOINTS. CORRECT ANY LEAKS AND RETEST.

4.3.2 TEST PIPING FROM WORKING AIR BANK CHARGING PANEL TO RAM CHARGING PANEL AND RAM TENSIONER AS FOLLOWS:

4.3.2.1 CHARGE SYSTEM WITH AIR TO 2450 PSI FOR TIGHTNESS TEST IN ACCORDANCE WITH REFERENCES 18 AND 19. TEST FAILURE OCCURS IF PRESSURE DROP AFTER 24 HOURS EXCEEDS 24.5 PSI (CORRECTED FOR AMBIENT TEMPERATURE CHANGE). LOCATE ANY LEAKS BY APPLYING LEAK DETECTION SOLUTION (MIL-PRF-25567) OR BY USING AN ULTRASONIC DETECTOR TO INSPECT ALL JOINTS. CORRECT ANY LEAKS AND RETEST.

5. LABEL PLATE REQUIREMENTS:

5.1 EACH AIR FLASK REQUIRING RE-CERTIFICATION SHALL BE LABELED WITH THE NAME OF TESTING ACTIVITY OR COMPANY, TYPE OF TEST, AND THE TEST DATE. IF LATEST TEST DATA IS NOT STAMPED ON THE NECK OF THE FLASK, AN ENGRAVED CRES TEST LABEL PLATE SHALL BE SECURED TO THE FLASK FOUNDATION, NOT TO THE FLASK. SEE REFERENCES 4 AND 5.

5.2 RAM CHARGING STATIONS PER REFERENCES 7 AND 9 HAVE A CAST BRONZE LABEL PLATE WITH SPACE TO STAMP THE TEST DATE AND TESTING ACTIVITY AT COMPLETION OF EACH RAM TENSIONER AIR PIPING 4500 PSI HYDROSTATIC TEST. IF UNREP CHARGING STATION IS NOT FITTED WITH A LABEL PER REFERENCES 7 OR 9, A CRES TEST LABEL PLATE SHALL BE LOCATED AT THE WORKING AIR BANK, BUT NOT ATTACHED TO A FLASK, WITH THE FOLLOWING ENGRAVED INSCRIPTION: "RAM TENSIONER PIPING AT THIS UNREP STATION INCLUDING WORKING AIR BANK PIPING TESTED TO 4500 PSI BY (ACTIVITY OR COMPANY) ON (DATE)".

5.3 EACH RELIEF VALVE SHALL HAVE A STAMPED CRES TEST LABEL PLATE SECURELY WIRED TO THE RELIEF VALVE WITH CRES WIRE, WITH THE FOLLOWING INFORMATION:
"SET/TESTED TO (PRESSURE)
(ACTIVITY)
(DATE)"
AN ADDITIONAL PLATE IS NOT REQUIRED IF THE RELIEF VALVE HAS THE FACTORY LABEL PLATE DESCRIBED ON NAVSEA 6243067 OR 6243102 (REFERENCE 20 OR 21) CITING TEST DATE.

5.4 EACH RESERVE AIR BANK SHALL HAVE A TEST LABEL PLATE OF ENGRAVED CRES, ATTACHED TO NEARBY STRUCTURE WITH CRES DRIVE SCREWS AND RTV, WITH THE FOLLOWING INFORMATION:
"RESERVE AIR BANK PIPING TESTED TO 4500 PSI BY (ACTIVITY OR COMPANY) ON (DATE)".
SEE REFERENCE 5.

5.5 EACH HEAVY UNREP WORKING AIR BANK AND EACH RAM TENSIONER CHARGING STATION SHALL HAVE A LABEL PLATE INSTALLED ADJACENT TO THEIR RESPECTIVE PRESSURE GAGES LISTING THE DIFFERENT RAM OPERATING PRESSURES TO BE USED FOR STREAM AND HEAVY UNREP TENSIONS. THEY SHALL BE INSTALLED AS SHOWN ON REFERENCES 4, 7 AND 9.

NOTES CONTINUED ON SHEET 3

REVISIONS

ZONE	LTR	DESCRIPTION	DATE	APPROVED

SIZE	CAGE CODE	NAVSEA DWG. NO.	REV
F	53711	8287599	–
SCALE NONE	UNIT WT ———	SHEET 2	

8287599

NOTES (CONTINUED):

5.6 DETAILED OPERATING PROCEDURES FOR ALIGNING AND CHARGING THE AIR BANKS, SIMILAR TO THOSE SHOWN ON THIS SHEET, SHALL BE PROVIDED FOR EACH HEAVY UNREP STATION.

5.6.1 THE PROCEDURES SHALL BE ON PHOTO-SENSITIVE PLATES IN ACCORDANCE WITH MIL-DTL-15024, TYPE H, .063 INCH THICK. RTV ADHESIVE SHALL BE USED TO SECURE THE PLATES TO A BULKHEAD OR PANEL ADJACENT TO THE FLASK CHARGING VALVES.

5.6.1.1 THE FLASK CHARGING PRESSURES SHALL BE INCLUDED TO SUIT THE SOLID CARGO STATIONS.

6. PRINCIPLES OF OPERATION:

6.1 THE HEAVY UNREP RAM TENSIONER HP AIR SYSTEM IS DESIGNED TO MINIMIZE THE NUMBER OF AIR FLASKS AND COMPRESSED AIR REQUIRED FOR STREAM AND HEAVY UNREP OPERATIONS BY ALTERNATING THE USE OF THE AIR FLASKS AND VARYING THE AIR PRESSURES REQUIRED FOR THE DIFFERENT TENSIONS IN ORDER TO MAINTAIN READINESS FOR THE NEXT UNREP EVOLUTION.

6.2 THE STREAM SYSTEM WILL BE USED FOR DELIVERY TO SHIPS SUCH AS LSD, CG, DD/DDG AND FFG HULLS WHERE THERE IS INSUFFICIENT STRENGTH TO SUPPORT HEAVY UNREP.

6.3 THE HEAVY UNREP SYSTEM WILL BE USED FOR DELIVERY TO SHIPS SUCH AS CV/CVN, LHA, LHD AND REPLENISHMENT TYPES WHOSE ATTACHMENT POINTS HAVE BEEN TESTED TO SUPPORT THE INCREASED HIGHLINE TENSIONS.

6.4 THE HEAVY UNREP WORKING AIR BANK CONSISTS OF EIGHT (8) APPROXIMATELY 10 CUFT FLASKS CONNECTED TO A COMMON SUPPLY LINE TO THE RAM TENSIONER CHARGING PANEL.

6.4.1 FOR HEAVY UNREP THE FLASKS ARE PRESSURIZED TO APPROXIMATELY 2000 PSI. FOR SWITCHING TO STREAM THE WORKING BANK PRESSURE IS BLED-DOWN TO APPROXIMATELY 1000 PSIG VIA A BACK PRESSURE REGULATING VALVE (BPRV). THE BPRV PREVENTS THE PRESSURE FROM DROPPING BELOW THE REQUIRED VALUE FOR STREAM TENSIONS. TO SWITCH BACK TO HEAVY UNREP THE BANK IS RE-PRESSURIZED FOR THE INCREASED HEAVY UNREP TENSIONS. A PRESSURE TRANSDUCER CONNECTED TO THE BANK SIGNALS THE THE STATION CONTROL SYSTEM PLC. THE PLC IN TURN DISPLAYS THE TENSION IN POUNDS ON THE TRANSFER LOAD LIMIT INDICATOR OF THE WINCH MASTER CONTROL PANEL. WHEN THE HIGHLINE TENSION REACHES 12,000 LBS ADEQUATE PRESSURE IS AVAILABLE FOR HEAVY UNREP.

NOTES (CONTINUED):

7. OPERATING PROCEDURES:

7.1 THE FOLLOWING PROCEDURES OUTLINE THE NECESSARY STEPS TO ALIGN THE AIR BANKS FOR STREAM OR HEAVY UNREP OPERATIONS. FOR SYSTEM CONFIGURATION SEE SCHEMATIC ON SHEET 4.

7.2 CHARGING WORKING AIR BANK FOR STREAM:

CAUTION:
THE RAM AIR SUPPLY VALVE AND THE AIR BANK STOP VALVE MUST BE CLOSED AT ALL TIMES EXCEPT WHEN OPERATING THE THE RAM TENSIONER.

7.2.1 CHECK PRESSURE OF AIR BANK. IF PRESSURE IS TOO LOW, INCREASE PRESSURE BY OPENING THE AIR BANK CHARGING VALVE UNTIL REQUIRED PRESSURE IS REACHED. IF PRESSURE IS TOO HIGH, OPEN THE BACK PRESSURE REGULATING VALVE (BPRV) INLET VALVES. THE BPRV WILL AUTOMATICALLY CLOSE AT APPROXIMATELY 1000 PSIG.

7.2.2 TO FINE-ADJUST BANK FLASK PRESSURE CRACK OPEN BPRV BYPASS VALVE AND BLEED DOWN AIR PRESSURE TO 930 PSIG.

7.2.3 ENSURE THE BPRV INLET VALVES AND BYPASS VALVES ARE CLOSED.

7.2.3 FULLY OPEN AIR BANK STOP VALVE.

CAUTION:
THE AIR BANK STOP VALVE MUST REMAIN FULLY OPEN WHEN RAM TENSIONER IS IN OPERATION.

7.2.5 AIR BANK IS NOW CHARGED AT PRESSURE FOR STREAM USE.

7.3 CHARGING WORKING AIR BANK FOR HEAVY UNREP:

CAUTION:
THE RAM AIR SUPPLY VALVE AND THE AIR BANK STOP VALVE MUST BE CLOSED AT ALL TIMES EXCEPT WHEN OPERATING THE THE RAM TENSIONER.

CAUTION:
ENSURE RESERVE AIR BANK IS CHARGED TO AT LEAST 2800 PSI BEFORE PROCEEDING ANY FURTHER.

7.3.1 OPEN THE RESERVE AIR BANK TO HP AIR MAIN STOP VALVE.

7.3.2 CHARGE FLASKS TO 2000 PSI BY OPENING THE AIR BANK CHARGING VALVE UNTIL THE REQUIRED PRESSURE IS REACHED.

7.3.3 CLOSE THE AIR BANK CHARGING VALVE.

7.3.4 CLOSE THE RESERVE AIR BANK TO HP AIR MAIN STOP VALVE.

7.3.5 FULLY OPEN AIR BANK STOP VALVE.

CAUTION:
THE AIR BANK STOP VALVE MUST REMAIN FULLY OPEN WHEN RAM TENSIONER IS IN OPERATION.

7.3.8 VERIFY WITH THE WINCH OPERATOR THAT THE HEAVY UNREP PRESSURE AVAILABLE LIGHT IS ILLUMINATED OR ACKNOWLEDGED BY THE PLC.

7.3.9 AIR BANK IS NOW CHARGED AT PRESSURE FOR HEAVY UNREP USE.

7.4 POST-HEAVY UNREP TRANSFER AIR BANK REALIGNMENT TO STREAM PRESSURES:

7.4.1 FOLLOW RAM SECURING PROCEDURES. RAM AIR SUPPLY VALVE MUST BE CLOSED.

7.4.2 BLEED-DOWN THE AIR BANK PRESSURE VIA THE BPRV. OPEN THE BACK PRESSURE REGULATING VALVE (BPRV) INLET VALVES. THE BPRV WILL AUTOMATICALLY CLOSE AT APPROXIMATELY 1000 PSIG.

7.4.3 TO FINE-ADJUST BANK FLASK PRESSURE CRACK OPEN BPRV BYPASS VALVE AND BLEED DOWN AIR PRESSURE TO 930 PSIG.

7.4.4 ENSURE THE BPRV INLET VALVES AND BYPASS VALVES ARE CLOSED.

7.4.5 CLOSE THE AIR BANK STOP VALVE.

7.4.6 AIR BANK IS NOW CHARGED AT PRESSURE FOR STREAM USE.

7.5 FOR HEAVY UNREP USE, REPEAT PROCEDURE 7.3 FOR "CHARGING WORKING AIR BANK FOR HEAVY UNREP:"

REVISIONS

ZONE	LTR	DESCRIPTION	DATE	APPROVED

8287599 -

SIZE	CAGE CODE	NAVSEA DWG. NO.	REV
F	53711	8287599	–
SCALE NONE		UNIT WT ———	SHEET 3

HEAVY UNREP RAM TENSIONER AIR PIPING SCHEMATIC

SEE TABLE "A" FOR RAM OPERATING PRESSURES
VALVE ALIGNMENTS (N.C. OR N.O.) SHOWN WITH RAM IN THE SECURED POSITION

TYPICAL HEAVY UNREP WORKING AIR BANK
EIGHT (8) FLASKS REQUIRED
(SEE REFERENCE 4)

1/4 NPS (TYP)
N.C.
AIR FLASK (TYP)
2 NPS
1-1/4 NPS (TYP)
1/2 NPS (TYP)
SET AT 2500 PSI
2-1/2 NPS FLASK HEADER
3/4 NPS (TYP)
1 NPS
SET AT 2500 PSI
BYPASS VALVE
BPRV
AIR BANK STOP VALVE
VALVE MUST BE ACCESSIBLE WITHOUT REACH RODS
0-3000 PSI
PT
BPRV INLET VALVES
BPRV SET AT 1000 PSI
1 NPS
PRESSURE TRANSDUCER CONSTANTLY MONITORS AIR PRESSURE
AIR BANK CHARGING VALVE
1/2 NPS
HEAVY UNREP STATION CONTROL SYSTEM PLC
TRANSFER LOAD LIMIT (LBS) READOUT
00000
HIGHLINE WINCH MASTER CONTROL PANEL IN WINCH BOOTH
2-1/2 NPS
RAM CHARGING STATION, SEE NOTE 2.5 & REF 6 THRU 9
SET AT 2500 PSI
AIR DUMP VALVE
RAM AIR SUPPLY VALVE
RAM TENSIONER (REF 22)
RAM TENSIONER ACCUMULATOR
WINCH DECK

TYPICAL RESERVE AIR BANK
(CHARGED TO 2900 PSI)
- 4 FLASKS MINIMUM REQUIRED FOR FIRST HEAVY UNREP RAM TENSIONER
- 8 FLASKS MINIMUM REQUIRED FOR 2 HEAVY UNREP RAM TENSIONERS
(SEE REFERENCE 5)

1/4 NPS (TYP)
AIR FLASK (TYP)
0-5000 PSI
1-1/4 NPS
1/2 NPS (TYP)
1/2 NPS
SET AT 3500 PSI (T-AOE 6-8)
SET AT 3000 PSI (T-AOE 10)
SET AT 3000 PSI (T-AKE 1 CLASS)
RESERVE AIR BANK TO HP AIR MAIN STOP VALVE
1/2 NPS
1/2 NPS (MINIMUM)
SHIP'S HP AIR MAIN FROM HP AIR COMPRESSOR RECEIVER AND DEHYDRATOR. INDIVIDUAL COMPRESSOR RATING: 20 CFH AT 3000 PSI (MINIMUM) (~68 CFM AT STANDARD CONDITIONS)
TO OTHER HEAVY UNREP STATION WORKING AIR BANK
TO OTHER STREAM UNREP STATION WORKING AIR BANKS

LEGEND

GLOBE VALVE	N.O. NORMALLY OPEN
DRAIN TO DECK LEVEL	N.C. NORMALLY CLOSED
CHECK VALVE	RELIEF VALVE
NEEDLE VALVE	PT PRESSURE TRANSDUCER
ELECTRICAL CABLING	EXHAUST SILENCER
PRESSURE GAUGE	BACK PRESSURE REGULATING VALVE
INSTRUMENT VALVE	

REVISIONS			
ZONE	LTR	DESCRIPTION	DATE	APPROVED

SIZE	CAGE CODE	NAVSEA DWG. NO.	REV
F	53711	8287599	—

SCALE NONE | UNIT WT ——— | SHEET 4

8287599

REVISIONS				
ZONE	LTR	DESCRIPTION	DATE	APPROVED

SUGGESTED SOURCE(S) OF SUPPLY			
SUPPLIER/VENDOR DATA			
CAGE	PART/DRAWING NUMBER	NAME & ADDRESS	APPLICATION
99565	H804R-6	COMBINATION PUMP VALVE CO 851 NORTH PRESTON ST PHILADELPHIA, PA 19104-1563	HEAVY UNREP NAVY STANDARD RAM TENSIONER
79926	P6BS	SSP FITTINGS CORP. 8250 BOYLE PARKWAY TWINSBURG, OH 44087	HEAVY UNREP NAVY STANDARD RAM TENSIONER

NOTES:

1. IDENTIFICATION OF THE "SUGGESTED SOURCE(S) OF SUPPLY" HEREON IS NOT TO BE CONSTRUED AS A GUARANTEE OF PRESENT OR CONTINUED AVAILABILITY AS A SOURCE OF SUPPLY FOR THE ITEM DESCRIBED ON THE DRAWING.
2. THE SUGGESTED SOURCE(S) LISTED ARE NOT INTENDED TO REPRESENT THE ONLY SOURCE(S) FOR THE ITEM(S).

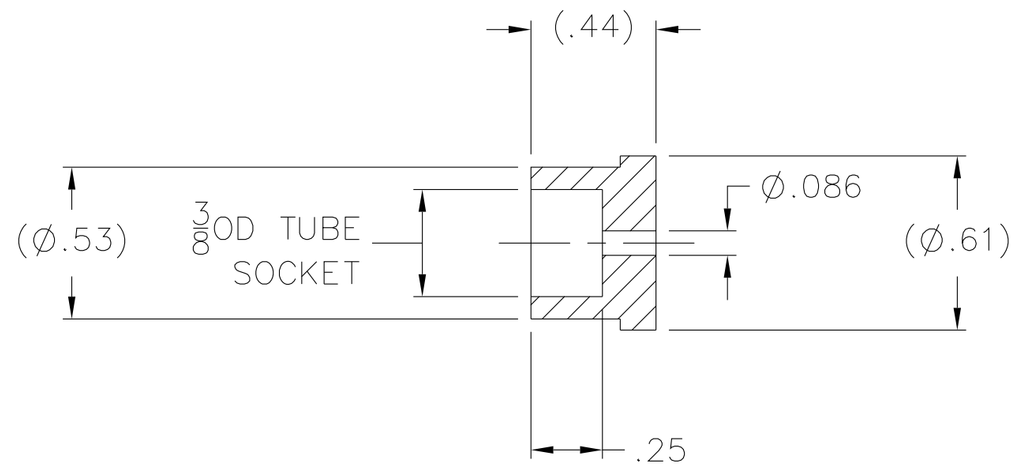

ALTERED ITEM DRAWING

PART OR IDENTIFYING NO.	QTY REQD	CODE IDENT NO.	DRAWING OR SPECIFICATION	NOMENCLATURE OR DESCRIPTION	REMARKS

PARTS LIST

NOTICE OF CONFIGURATION CONTROL

THIS DRAWING DEFINES AN ITEM OF UNDERWAY REPLENISHMENT (UNREP) STANDARD HARDWARE. NO REVISION TO THIS DRAWING OR THE HARDWARE REPRESENTED BY IT IS AUTHORIZED WITHOUT THE WRITTEN APPROVAL OF THE NAVAL SEA SYSTEMS COMMAND.

APPLICATION	
NEXT ASSY	USED ON
8287558	8287500

MATERIAL:
CRES 316

UNLESS OTHERWISE SPECIFIED:
ALL DIMENSIONS ARE IN INCHES
TOLERANCES: ANGLES±
FRACTIONS±
DECIMALS
.XX±
.XXX±
BEND RADII
FILLETS & ROUNDS
SURFACE FINISH √
BREAK ALL SHARP EDGES

INTERPRET DRAWING IN ACCORDANCE WITH STANDARDS PRESCRIBED IN ASME Y14.100

DO NOT SCALE THIS DRAWING

PORT HUENEME DIVISION
NAVAL SURFACE WARFARE CENTER
4363 MISSILE WAY
PORT HUENEME, CA 93043-4307

PREPARED	AMSEC	10-09
CHECKED	M. PEREZ	10-09
TECH LEAD	J. BROWN	10-09
BR HD		
ACCEPTED BY NAVSEA	(SIGNATURE DOES NOT DENOTE APPROVAL)	
APPROVED FOR NAVSEA	(SIGN ONLY IF ENGINEERING HAS BEEN "PROVED" BY MANUFACTURE AND TEST)	

DEPARTMENT OF THE NAVY
NAVAL SEA SYSTEMS COMMAND
WASHINGTON, D.C. 20376-5160

HEAVY UNREP – NAVY STANDARD
RAM TENSIONER

BLANK TAILPIECE (ALTERED)

SIZE	CAGE CODE	NAVSEA DWG NO.	REV
C	53711	8287601	–

SCALE 2/1 | UNIT WEIGHT: .1 LB | SHEET 1 OF 1

8287601 LL

NSWC 4120/4 (REV. 03-92)

NOTES:

1. WELDING REQUIREMENTS:

1.1 FABRICATION, WELDING, STRESS RELIEF AND INSPECTION SHALL BE IN ACCORDANCE WITH NAVSEA S9074-AR-GIB-010/278 AND T9074-AS-GIB-010/271, CLASS M-2, CATEGORY A.

1.2 WELD INSPECTION STARTS AT ROOT WELD IAW TECHNICAL PUBLICATIONS LISTED IN 1.1 ABOVE.

1.3 UNLESS OTHERWISE SPECIFIED ON THIS DRAWING, ALL DIMENSIONS AND TOLERANCES REFER TO FINISHED PRODUCT.

2. DIMENSIONS PROVIDED IN REMARKS COLUMN OF PARTS LIST ARE REFERENCE ONLY UNLESS THERE IS NO DETAILED VIEW WHICH SPECIFIES REQUIRED DIMENSIONS.

3. WELDMENT MAY BE STRAIGHTENED IF REQUIRED TO MEET DIMENSIONAL REQUIREMENTS ON THE FACE OF DRAWING.

4. STOCK SIZE IN REMARKS COLUMN OF PARTS LIST IS NOMINAL WITHOUT MANUFACTURING ALLOWANCE.

5. PAINT ALL SURFACES USING PROCEDURES AND MATERIALS SPECIFIED IN PC 6 USING SPECIAL PROCEDURE FOR RAM TENSIONERS.

REVISIONS

ZONE	LTR	DESCRIPTION	DATE	APPROVED

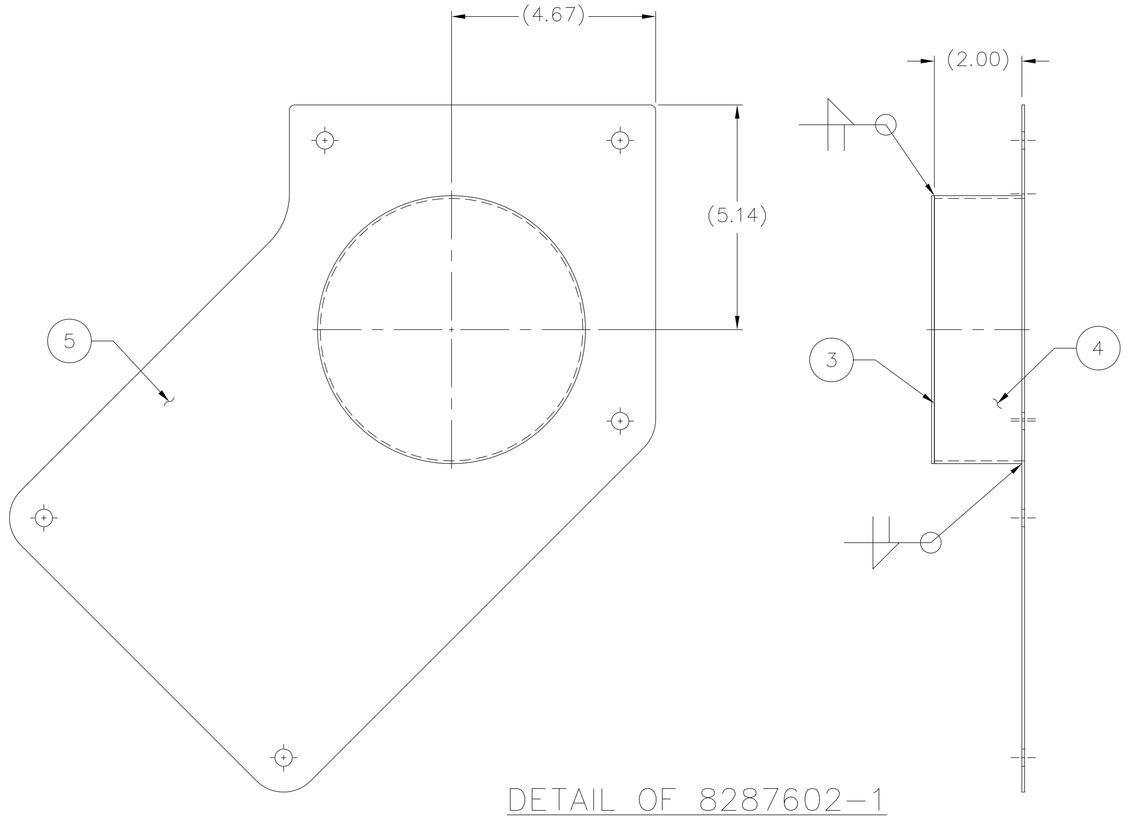

DETAIL OF 8287602-1
ARC SENDING UNIT BRKT COVER
LEFT HAND CONFIGURATION

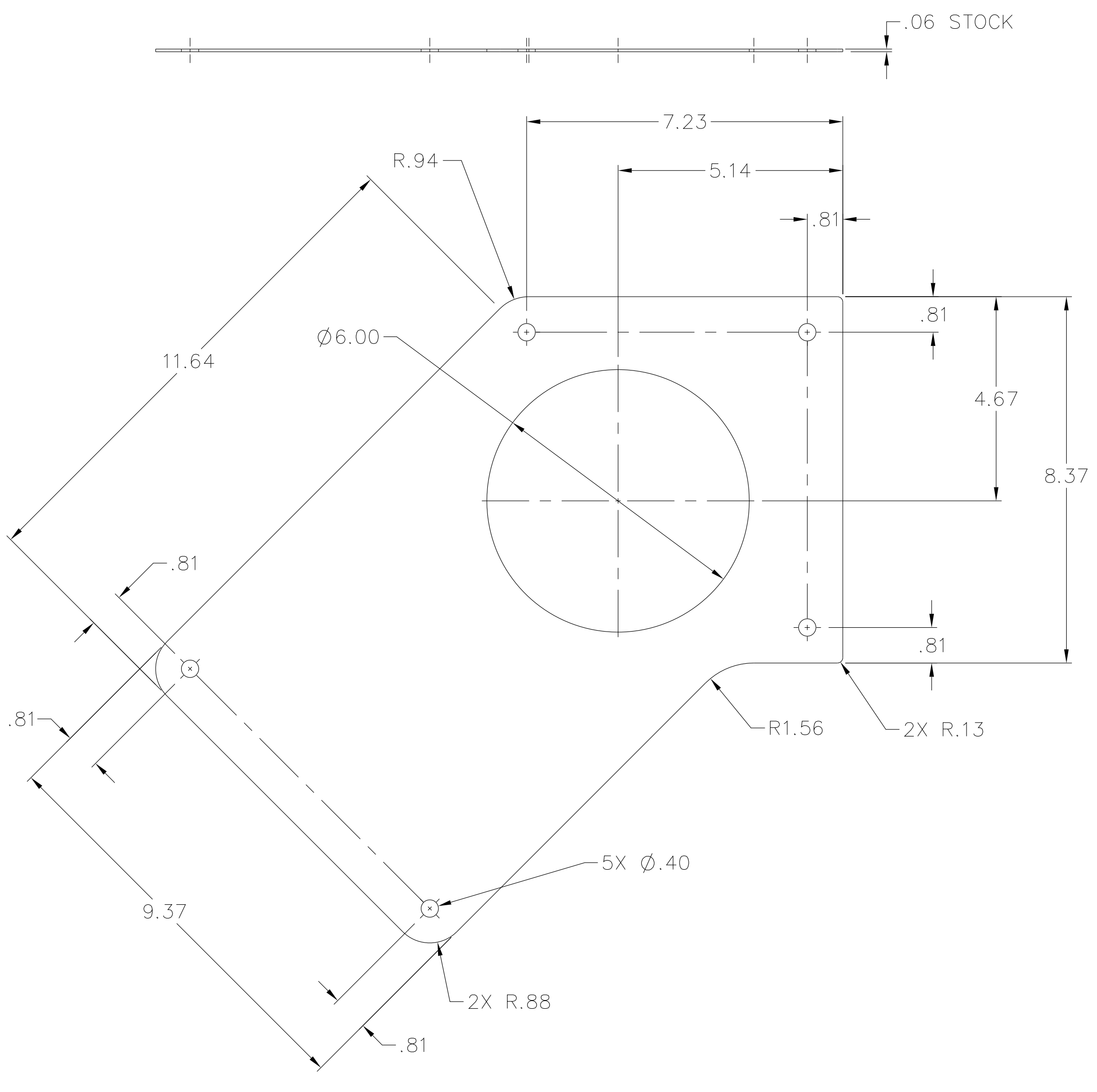

DETAIL OF PIECE 5
QTY 2 REQD

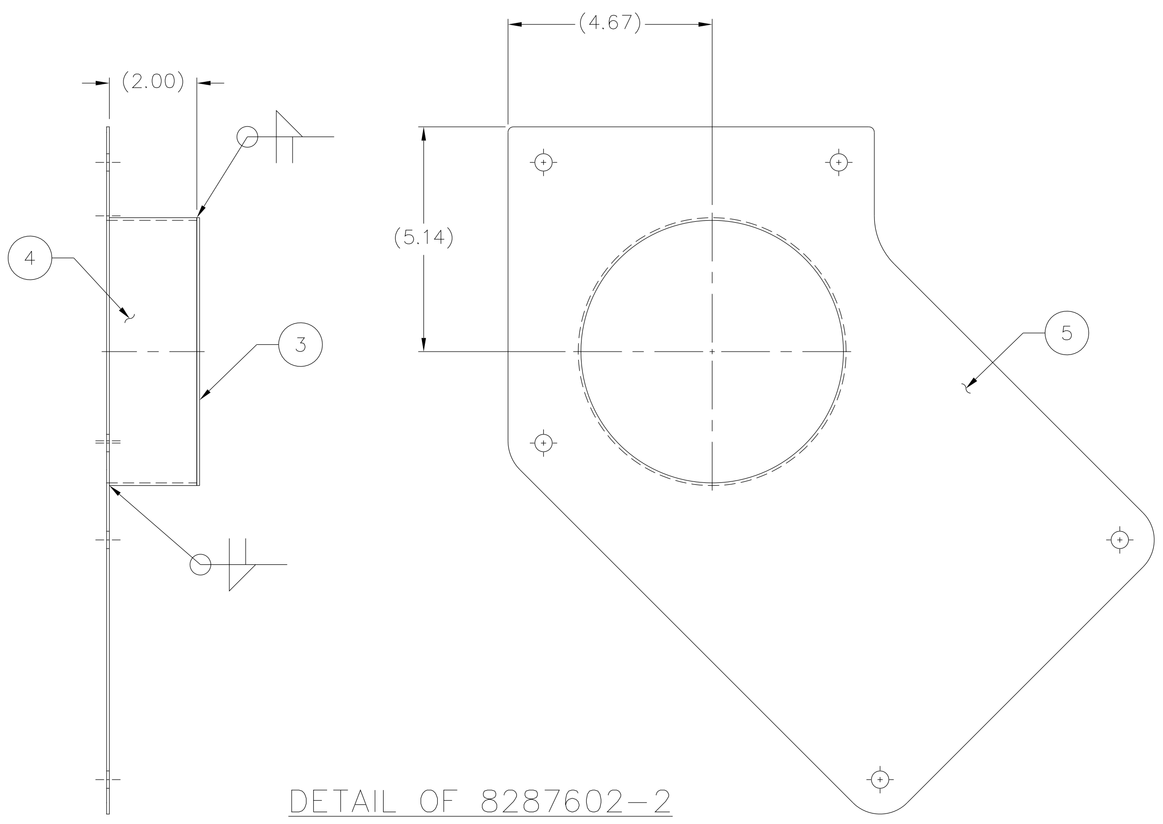

DETAIL OF 8287602-2
ARC SENDING UNIT BRKT COVER
RIGHT HAND CONFIGURATION

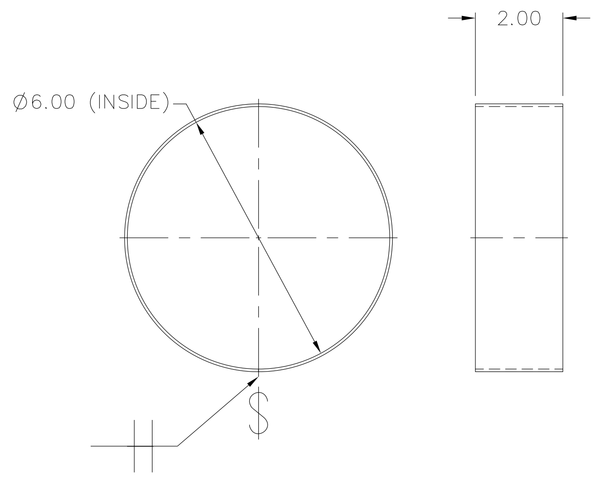

DETAIL OF PIECE 4
QTY 2 REQD

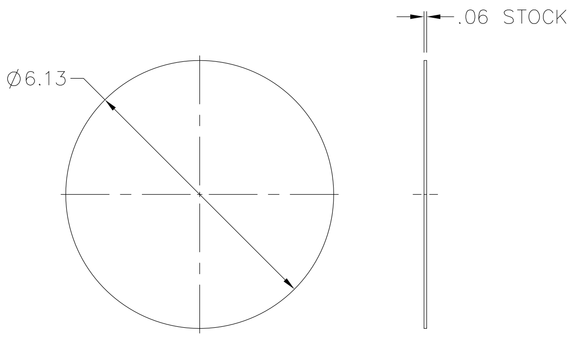

DETAIL OF PIECE 3
QTY 2 REQD

PART OR IDENTIFYING NO.	-1 DASH NO QTY REQD	-2 DASH NO QTY REQD	CODE IDENT NO.	DRAWING OR SPECIFICATION	NOMENCLATURE OR DESCRIPTION	REMARKS
6	AR	AR	53711	5210545	STD PAINT PROCEDURE-UNREP	SEE NOTE 5
5	1	1			SHEET, 16 GA	1/16 X 15 X 15 3/4
4	1	1			SHEET, 16 GA	1/16 X 2 X 19
3	1	1			SHEET, 16 GA	1/16 X 6 1/8 DIA

PARTS LIST

NOTICE OF CONFIGURATION CONTROL

THIS DRAWING DEFINES AN ITEM OF UNDERWAY REPLENISHMENT (UNREP) STANDARD HARDWARE. NO REVISION TO THIS DRAWING OR THE HARDWARE REPRESENTED BY IT IS AUTHORIZED WITHOUT THE WRITTEN APPROVAL OF THE NAVAL SEA SYSTEMS COMMAND.

DISTRIBUTION STATEMENT C: DISTRIBUTION AUTHORIZED TO U.S. GOVERNMENT AGENCIES AND THEIR CONTRACTORS: OTHER REQUESTS MUST BE REFERRED TO COMNAVSEA OR THE COGNIZANT NAVSEA CODE.

WARNING: THIS DOCUMENT CONTAINS TECHNICAL DATA WHOSE EXPORT IS RESTRICTED BY THE ARMS EXPORT CONTROL ACT (TITLE 22, U.S.C. SEC. 2751 ET SEQ.) OR EXECUTIVE ORDER 12470. VIOLATIONS OF THESE EXPORT LAWS ARE SUBJECT TO SEVERE CRIMINAL PENALTIES.

DESTRUCTION NOTICE: DESTROY BY ANY METHOD THAT WILL PREVENT DISCLOSURE OF CONTENTS OR RECONSTRUCTION OF THE DOCUMENT.

APPLICATION	
NEXT ASSY	USED ON
8287500	8287500

MATERIAL:
CRES ASTM 240
GRADE 316L

UNLESS OTHERWISE SPECIFIED:
ALL DIMENSIONS ARE IN INCHES
TOLERANCES: ANGLES±
FRACTIONS± 1/16
DECIMALS
.XX± .02
.XXX±
BEND RADII
FILLETS & ROUNDS
SURFACE FINISH 250/
BREAK ALL SHARP EDGES
INTERPRET DRAWING IN ACCORDANCE WITH STANDARDS PRESCRIBED IN ASME Y14.100
DO NOT SCALE THIS DRAWING

PORT HUENEME DIVISION NAVAL SURFACE WARFARE CENTER 4363 MISSILE WAY PORT HUENEME, CA 93043-4307			
PREPARED	AMSEC	10-09	
CHECKED	M. PEREZ	10-09	
TECH LEAD	J. BROWN	10-09	
BR HD			
ACCEPTED BY NAVSEA		(SIGNATURE DOES NOT DENOTE APPROVAL)	
APPROVED FOR NAVSEA		(SIGN ONLY IF ENGINEERING HAS BEEN "PROVED" BY MANUFACTURE AND TEST)	

DEPARTMENT OF THE NAVY
NAVAL SEA SYSTEMS COMMAND
WASHINGTON,D.C. 20376-5160

HEAVY UNREP-NAVY STANDARD
RAM TENSIONER

ARC SENDING UNIT BRACKET COVER

SIZE	CAGE CODE	NAVSEA DWG. NO.	REV
F	53711	8287602	-

SCALE 1/2 | UNIT WT 4.1 LBS | SHEET 1 OF 1

8287602

NSWC 4120/1A (REV. 03-92)

REVISIONS				
ZONE	LTR	DESCRIPTION	DATE	APPROVED

APPROVED SOURCE(S) OF SUPPLY			
SUPPLIER/VENDOR DATA			
CODE IDENT	PART/DRAWING NUMBER	NAME & ADDRESS	APPLICATION
99565	50N–10	CPV MANUFACTURING INC 851 N PRESTON ST PHILADELPHIA, PA 19104–1563	HEAVY UNREP RAM TENSIONER HP AIR PIPING
32142	6N50–10	HYDRASEARCH TECHNICAL PRODUCTS DIV 100 LOG CANOE CIRCLE STEVENSVILLE, MD 21666–2128	HEAVY UNREP RAM TENSIONER HP AIR PIPING

NOTES:

1. PART TO BE TO MANUFACTURER'S TOLERANCES.
2. ALL DIMENSIONS ON THE FACE OF THIS DRAWING ARE REFERENCE.
3. ONLY THE ITEM DESCRIBED ON THIS DRAWING WHEN PURCHASED FROM THE VENDOR(S) LISTED HEREON IS APPROVED BY THE NAVY FOR USE ON THE APPLICATION(S) SPECIFIED HEREIN. A SUBSTITUTE ITEM SHALL NOT BE USED WITHOUT PRIOR APPROVAL BY THE NAVY.
4. IDENTIFICATION OF THE "APPROVED SOURCE(S) OF SUPPLY" HEREON IS NOT TO BE CONSTRUED AS A GUARANTEE OF PRESENT OR CONTINUED AVAILABILITY AS A SOURCE OF SUPPLY FOR THE ITEM DESCRIBED ON THE DRAWING.
5. UNION NUT SHALL MEET THE REQUIREMENTS OF NAVSHIPS STANDARD DRAWING 803–1385884.

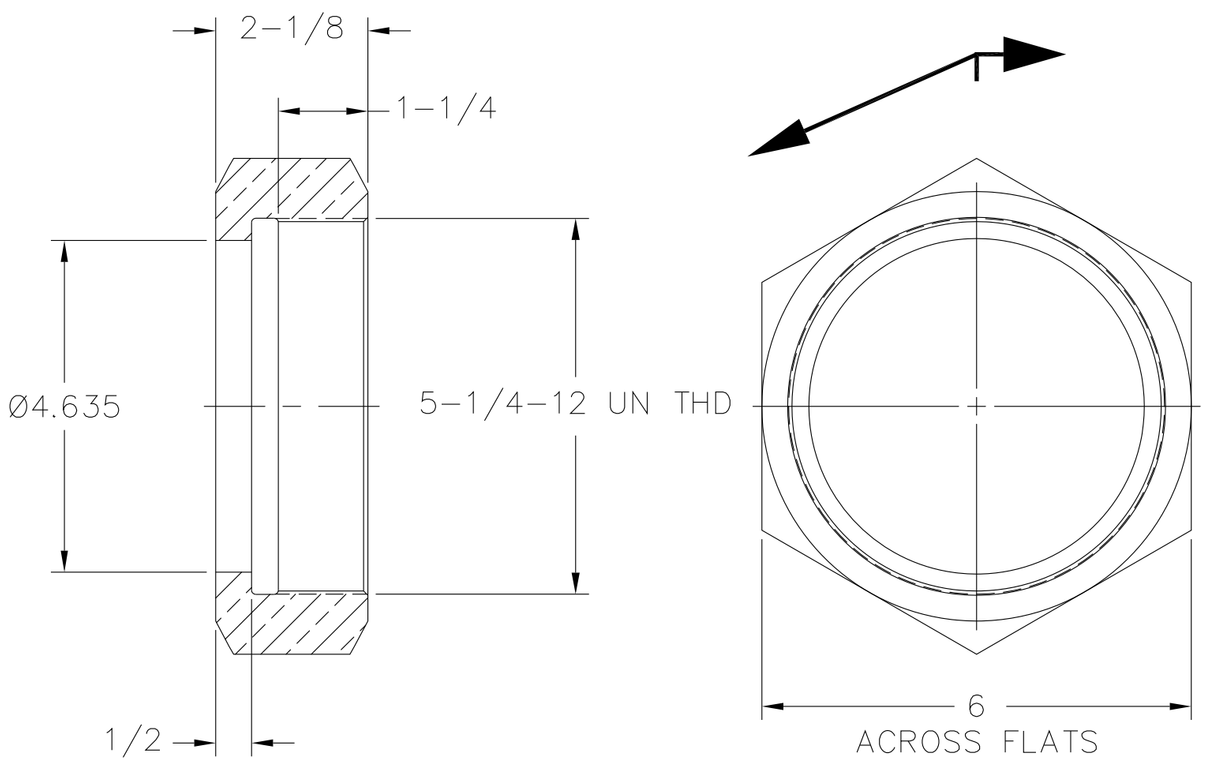

SOURCE CONTROL DRAWING

PART OR IDENTIFYING NO.	QTY REQD	CODE IDENT NO.	DRAWING OR SPECIFICATION	NOMENCLATURE OR DESCRIPTION	REMARKS

PARTS LIST

DISTRIBUTION STATEMENT C: DISTRIBUTION AUTHORIZED TO U.S. GOVERNMENT AGENCIES AND THEIR CONTRACTORS; OTHER REQUESTS MUST BE REFERRED TO COMNAVSEA OR THE COGNIZANT NAVSEA CODE.

WARNING: THIS DOCUMENT CONTAINS TECHNICAL DATA WHOSE EXPORT IS RESTRICTED BY THE ARMS EXPORT CONTROL ACT (TITLE 22, U.S.C. SEC. 2751 ET SEQ.) OR EXECUTIVE ORDER 12470. VIOLATIONS OF THESE EXPORT LAWS ARE SUBJECT TO SEVERE CRIMINAL PENALTIES.

DESTRUCTION NOTICE: DESTROY BY ANY METHOD THAT WILL PREVENT DISCLOSURE OF CONTENTS OR RECONSTRUCTION OF THE DOCUMENT.

APPLICATION	
NEXT ASSY	USED ON
8288580	8288580
8288602	8288582
8288603	8288583
8288608	8288584
8288609	8288585
8287502	8287500

MATERIAL:
MONEL
(NI–CU ALLOY)

UNLESS OTHERWISE SPECIFIED:
ALL DIMENSIONS ARE IN INCHES
TOLERANCES: ANGLES±
FRACTIONS±
DECIMALS
.XX±
.XXX±
BEND RADII
FILLETS & ROUNDS

SURFACE FINISH √
BREAK ALL SHARP EDGES

INTERPRET DRAWING IN ACCORDANCE WITH STANDARDS PRESCRIBED IN ASME Y14.100

DO NOT SCALE THIS DRAWING

PORT HUENEME DIVISION NAVAL SURFACE WARFARE CENTER 4363 MISSILE WAY PORT HUENEME, CA 93043–4307		
PREPARED	AMSEC	06–07
CHECKED		
TECH LEAD		
BR HD		
ACCEPTED BY NAVSEA	(SIGNATURE DOES NOT DENOTE APPROVAL)	
APPROVED FOR NAVSEA	(SIGN ONLY IF ENGINEERING HAS BEEN "PROVED" BY MANUFACTURE AND TEST)	

DEPARTMENT OF THE NAVY
NAVAL SEA SYSTEMS COMMAND
WASHINGTON, D.C. 20376–5160

HEAVY UNREP – NAVY STANDARD
HIGH PRESSURE AIR PIPING

3 NPS UNION NUT

SIZE	CAGE CODE	NAVSEA DWG. NO.	REV
C	53711	8288592	—

SCALE 1/2 | UNIT WT 6.8 LBS | SHEET 1 OF 1

NOTICE OF CONFIGURATION CONTROL

THIS DRAWING DEFINES AN ITEM OF UNDERWAY REPLENISHMENT (UNREP) STANDARD HARDWARE. NO REVISION TO THIS DRAWING OR THE HARDWARE REPRESENTED BY IT IS AUTHORIZED WITHOUT THE WRITTEN APPROVAL OF THE NAVAL SEA SYSTEMS COMMAND.

8288592

NSWC 4120/4 (REV. 03–92)

REVISIONS				
ZONE	LTR	DESCRIPTION	DATE	APPROVED

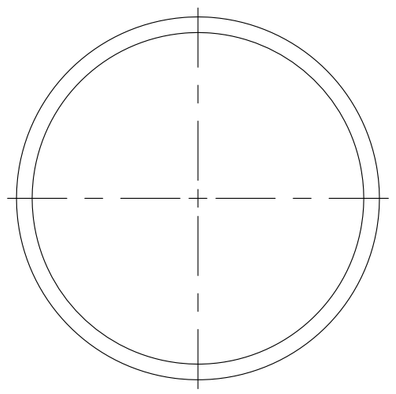

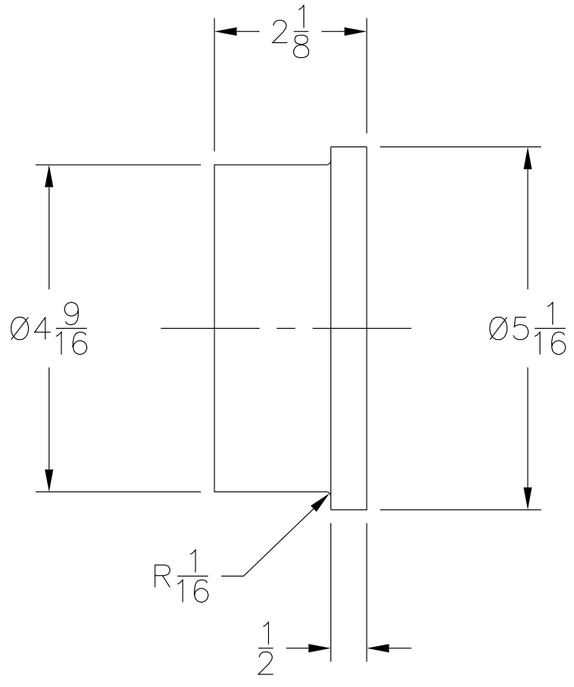

8288618 -

DISTRIBUTION STATEMENT C: DISTRIBUTION AUTHORIZED TO U.S. GOVERNMENT AGENCIES AND THEIR CONTRACTORS; OTHER REQUESTS MUST BE REFERRED TO COMNAVSEA OR THE COGNIZANT NAVSEA CODE.

WARNING: THIS DOCUMENT CONTAINS TECHNICAL DATA WHOSE EXPORT IS RESTRICTED BY THE ARMS EXPORT CONTROL ACT (TITLE 22, U.S.C. SEC. 2751 ET SEQ.) OR EXECUTIVE ORDER 12470. VIOLATIONS OF THESE EXPORT LAWS ARE SUBJECT TO SEVERE CRIMINAL PENALTIES.

DESTRUCTION NOTICE: DESTROY BY ANY METHOD THAT WILL PREVENT DISCLOSURE OF CONTENTS OR RECONSTRUCTION OF THE DOCUMENT.

PART OR IDENTIFYING NO.	QTY REQD	CODE IDENT NO.	DRAWING OR SPECIFICATION	NOMENCLATURE OR DESCRIPTION	REMARKS

PARTS LIST

NOTICE OF CONFIGURATION CONTROL

THIS DRAWING DEFINES AN ITEM OF UNDERWAY REPLENISHMENT (UNREP) STANDARD HARDWARE. NO REVISION TO THIS DRAWING OR THE HARDWARE REPRESENTED BY IT IS AUTHORIZED WITHOUT THE WRITTEN APPROVAL OF THE NAVAL SEA SYSTEMS COMMAND.

APPLICATION	
NEXT ASSY	USED ON
8287502	8287500

MATERIAL:
UV RESISTANT VHMW POLYETHLENE PER ASTM D4801 TYPE III (WEATHER-RESISTANT BLACK)

UNLESS OTHERWISE SPECIFIED:
ALL DIMENSIONS ARE IN INCHES
TOLERANCES: ANGLES± FRACTIONS± 1/16
DECIMALS
.XX±
.XXX±
BEND RADII
FILLETS & ROUNDS

SURFACE FINISH √
BREAK ALL SHARP EDGES

INTERPRET DRAWING IN ACCORDANCE WITH STANDARDS PRESCRIBED IN ASME Y14.100

DO NOT SCALE THIS DRAWING

PORT HUENEME DIVISION
NAVAL SURFACE WARFARE CENTER
4363 MISSILE WAY
PORT HUENEME, CA 93043-4307

PREPARED	AMSEC	06-07
CHECKED		
TECH LEAD		
BR HD		
ACCEPTED BY NAVSEA	(SIGNATURE DOES NOT DENOTE APPROVAL)	
APPROVED FOR NAVSEA	(SIGN ONLY IF ENGINEERING HAS BEEN "PROVED" BY MANUFACTURE AND TEST)	

DEPARTMENT OF THE NAVY
NAVAL SEA SYSTEMS COMMAND
WASHINGTON, D.C. 20376-5160

HEAVY UNREP - NAVY STANDARD
HIGH PRESSURE AIR PIPING

3 NPS BLANK SHIPPING TAILPIECE

SIZE	CAGE CODE	NAVSEA DWG. NO.	REV
C	53711	8288618	—

SCALE 1/2 | UNIT WT ——— | SHEET 1 OF 1

NSWC 4120/4 (REV. 03-92)