NOTES.

1. FABRICATED LADDER FRAMES FROM TYPE 304 STAINLESS STEEL WITH SMOOTH, WRINKLE-FREE BENDS. POLISHED TO 320 GRIT.
2. FABRICATED LADDER STEPS FROM TYPE 304 STAINLESS STEEL WITH SMOOTH, ROUNDED CORNERS. BREAK ALL SHARP EDGES.
3. ALL LADDERS SHALL HAVE WHITE NON-MARKING RUBBER BUMPERS AT THEIR LOWER ENDS.

REV	DESCRIPTION	DATE	APPROVED
-	ORIGINAL ISSUE		

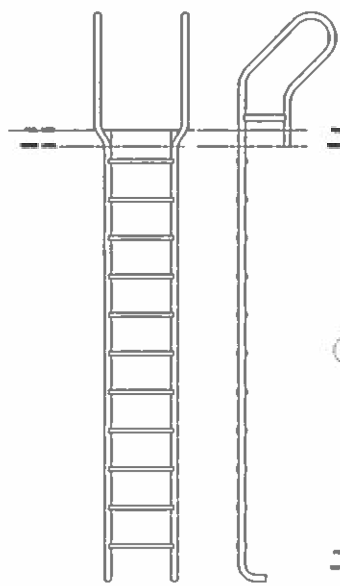

(2) 11 STEP LADDER

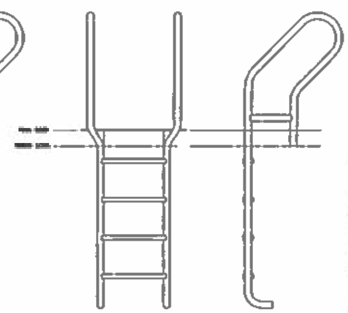

(3) 4 STEP LADDER

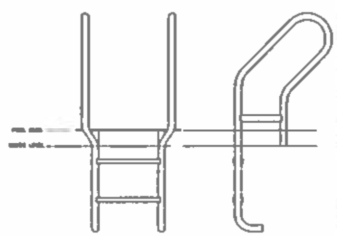

(4) 2 STEP LADDER

-15	-14	-13	-12	-11	-10	-9	-8	-7	-6	-5	-4	-3	-2	-1	FIND NO.	CAGE CODE	PART NO. OR IDENTIFYING NO.		NOMENCLATURE OR DESCRIPTION	MATERIAL	SPECIFICATION	NOTE
									1						19	0CZC7	PLATE, T304 1/8 INCH THK		PLATE, 1/8 INCH THK (7 INCH X 19 INCH)	CRES		
							AR								18	0CZC7	STOCK, SOLID, T304 1.75 INCH DIA. X LENGTH		STOCK, SOLID, 1.75 INCH DIA.	CRES	T304	
										1					17	0CZC7	PLATE, T304 1/4 INCH THK		PLATE, 1/4 INCH THK (4 INCH X 30 INCH)	CRES		
AR	AR	AR	AR	AR	AR	AR		AR			AR	AR	AR		16	0CZC7	PIPE, T304, SCH 40 1-1/2 INCH DIA. X LENGTH		PIPE, 1-1/2 INCH SCH 40 (1.90 INCH O.D. X .065 WALL)	CRES		
X														1	15	0610A	9900107-15		LADDER, STABILIZER	CRES		
	X													1	14	0610A	9900107-14	1	RAIL, RIGHT, COPING LADDER, (2 STEP)	CRES		
		X												1	13	0610A	9900107-13	1	RAIL, LEFT, COPING LADDER, (2 STEP)	CRES		
			X											1	12	0610A	9900107-12	1	RAIL, RIGHT, COPING LADDER, (4 STEP)	CRES		
				X										1	11	0610A	9900107-11	1	RAIL, LEFT, COPING LADDER, (4 STEP)	CRES		
					X									1	10	0610A	9900107-10	1	RAIL, RIGHT, COPING LADDER, (11 STEP)	CRES		
						X								1	9	0610A	9900107-9	1	RAIL, LEFT, COPING LADDER, (11 STEP)	CRES		
							X			2					8	0610A	9900107-8		STUD, LADDER MOUNT-B (REQUIRED O.D.: 1.750 INCH)	CRES 304		
								X		2					7	0610A	9900107-7		STUD, LADDER MOUNT-A	CRES 304		
									X		2	4	12		6	0610A	9900107-6	2	STEP, LADDER	CRES		
										X	1	1	1		5	0610A	9900107-5		BRACKET, LADDER MOUNTING	CRES		
											X			1	4	0610A	9900107-4		LADDER, COPING, 2 STEP	CRES		
												X		1	3	0610A	9900107-3		LADDER, COPING, 4 STEP	CRES		
													X	1	2	0610A	9900107-2		LADDER, COPING, 11 STEP	CRES		
														X	1	0610A	9900107-1		LADDER ASSEMBLY, ATF POOL, COPING	CRES		

QTY PER ASSY

PARTS LIST

UNLESS OTHERWISE SPECIFIED DIMENSIONS ARE IN INCHES

FINISH: POLISHED TO 320 GRIT

MATERIAL: STAINLESS STEEL T304

NAVAL DIVING & SALVAGE TRAINING CENTER

PANAMA CITY, FLORIDA 32407

9900107--01

B.DIETZ

R. DAVIS

E. DELANOY

R. GARDENR

CWO ROTAN

NAVFAC

ATF POOL

COPING LADDER ASSEMBLY

SIZE	CAGE CODE	DWG NO.	REV
D	0610A	9900107	-

SCALE: NONE

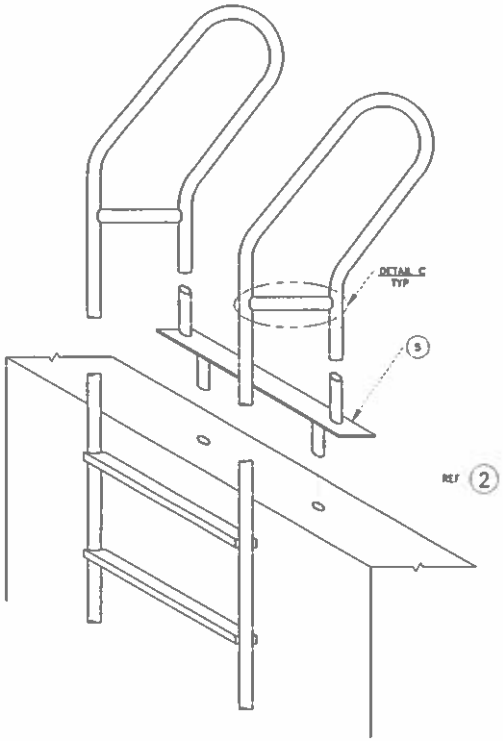

ISOMETRIC VIEW OF LADDER MOUNTING BRACKET

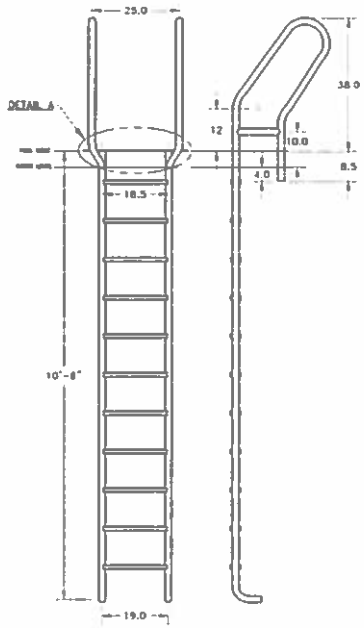

REF (2) 11 STEP LADDER

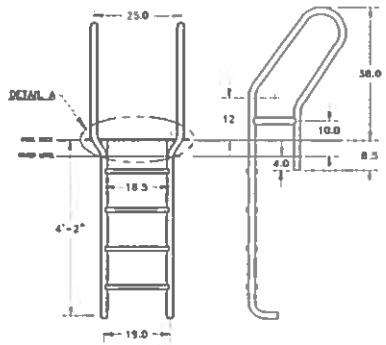

REF (3) 4 STEP LADDER

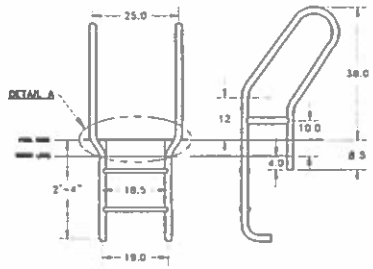

REF (4) 2 STEP LADDER

ATF POOL COPING LADDER ASSEMBLY	D0610A	9900107
B.DEZ		
9900107-02	NONE	2

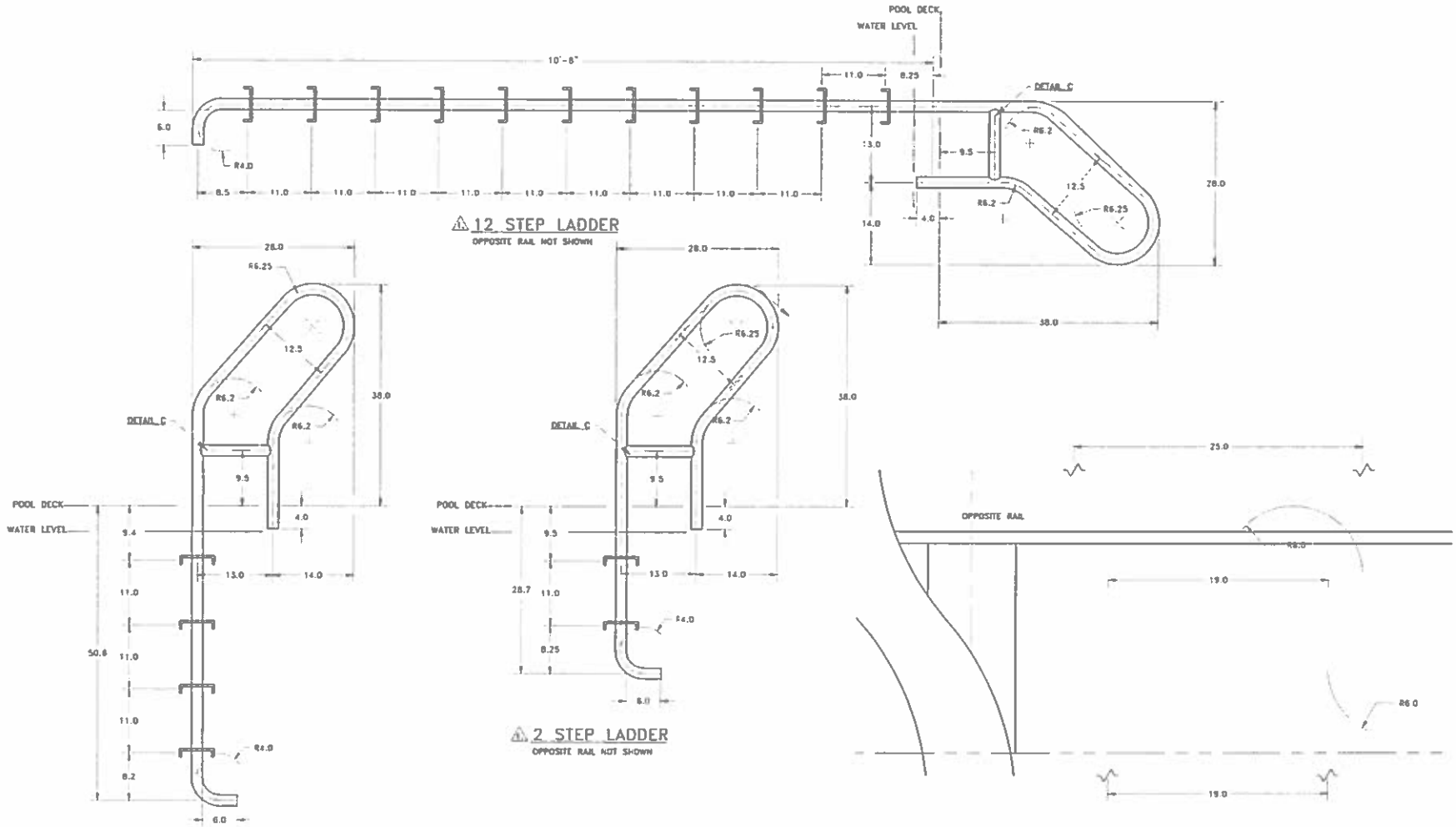

AIF POOL COPING LADDER ASSEMBLY			
B.DEZ	D10610A	9900107	–
9900107-C3	NONE	3	7

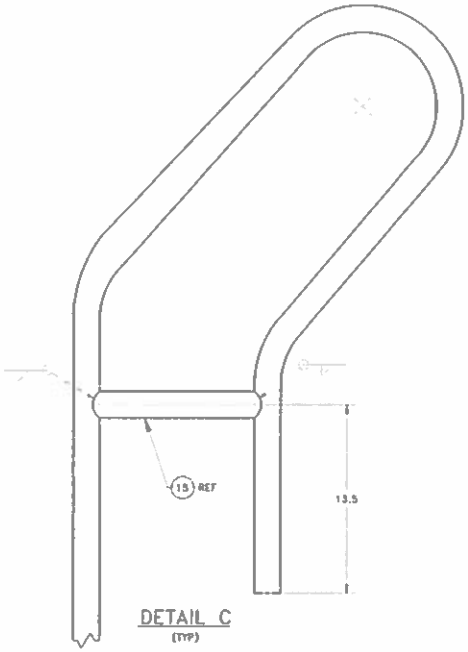

DETAIL C
(TYP)

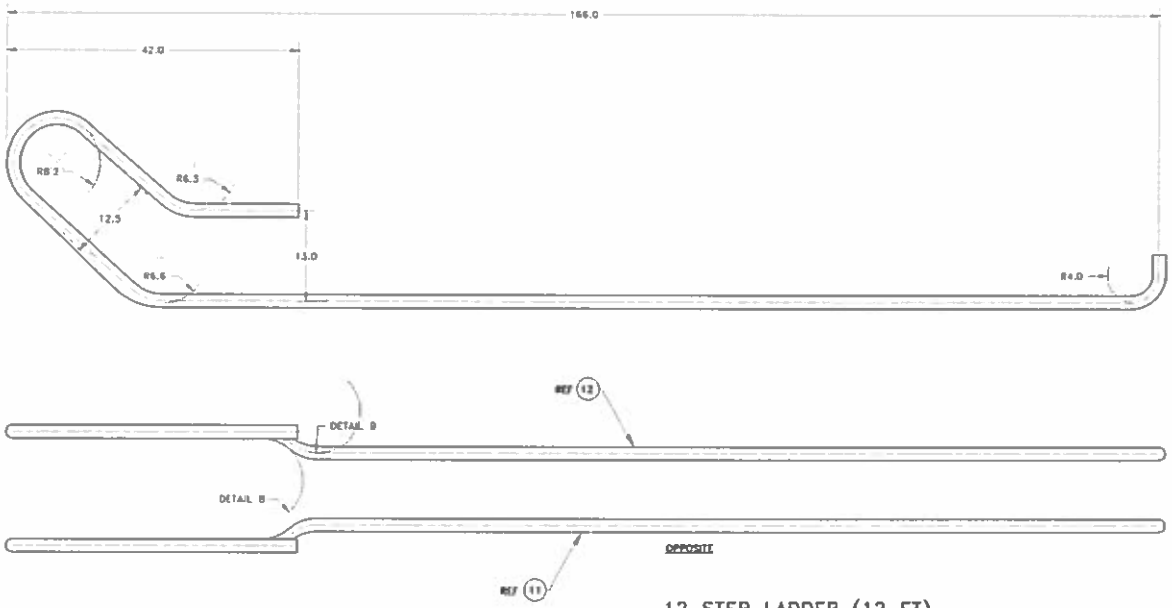

12 STEP LADDER (12 FT)

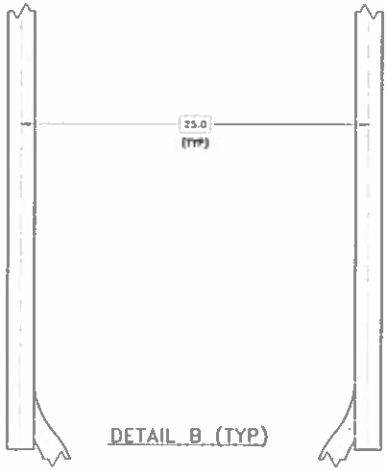

DETAIL B (TYP)

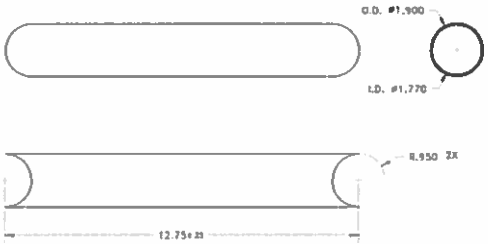

15 STABLIZER

ATF POOL COPING LADDER ASSEMBLY			
B. DIETZ	D 0610A	9900107	—
9900107--04	NONE		

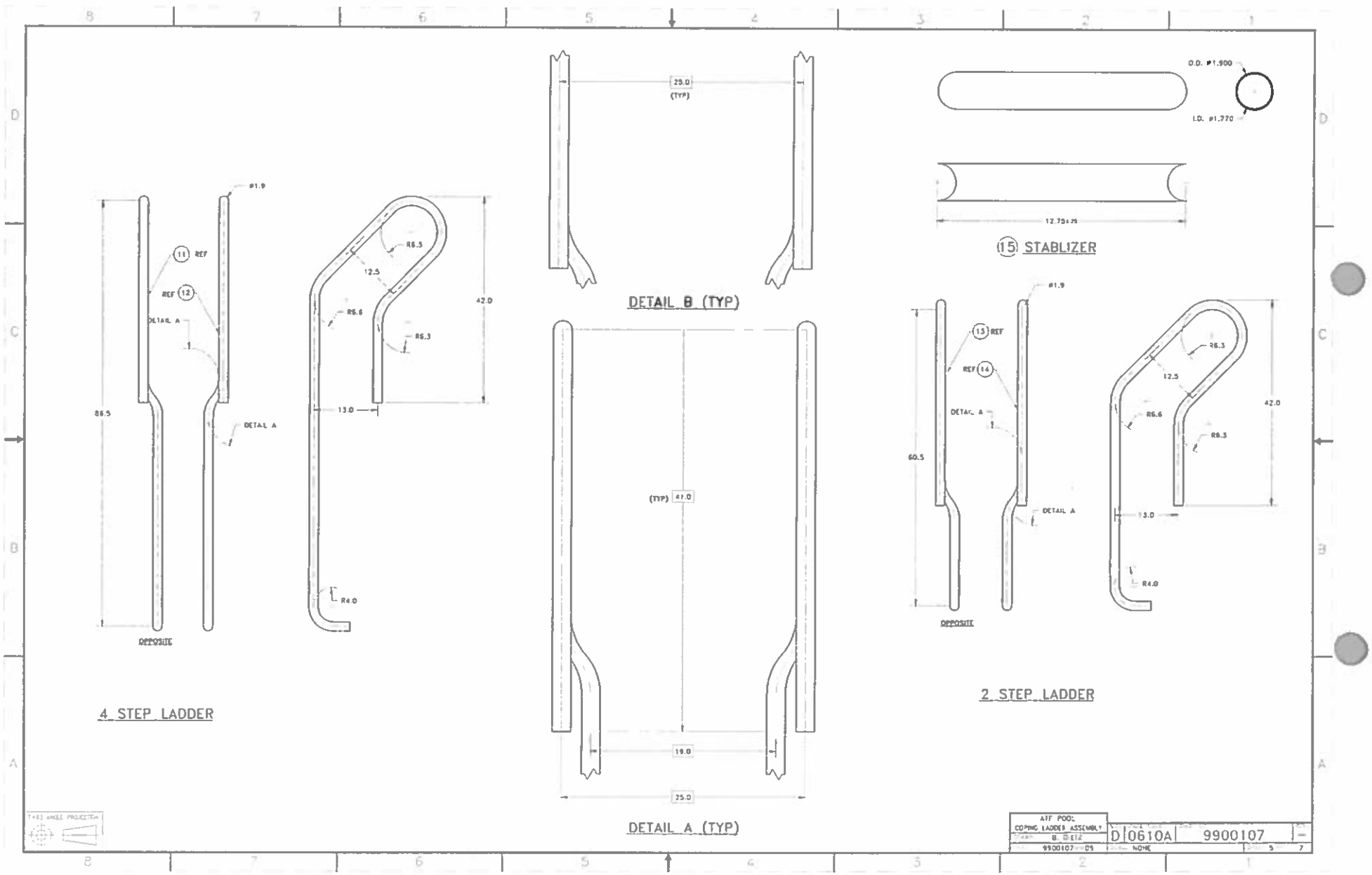

4 STEP LADDER
DETAIL A (TYP)
DETAIL B (TYP)
15 STABLIZER
2 STEP LADDER
OPPOSITE
ATF POOL
COPING LADDER ASSEMBLY
D 0610A 9900107
NONE

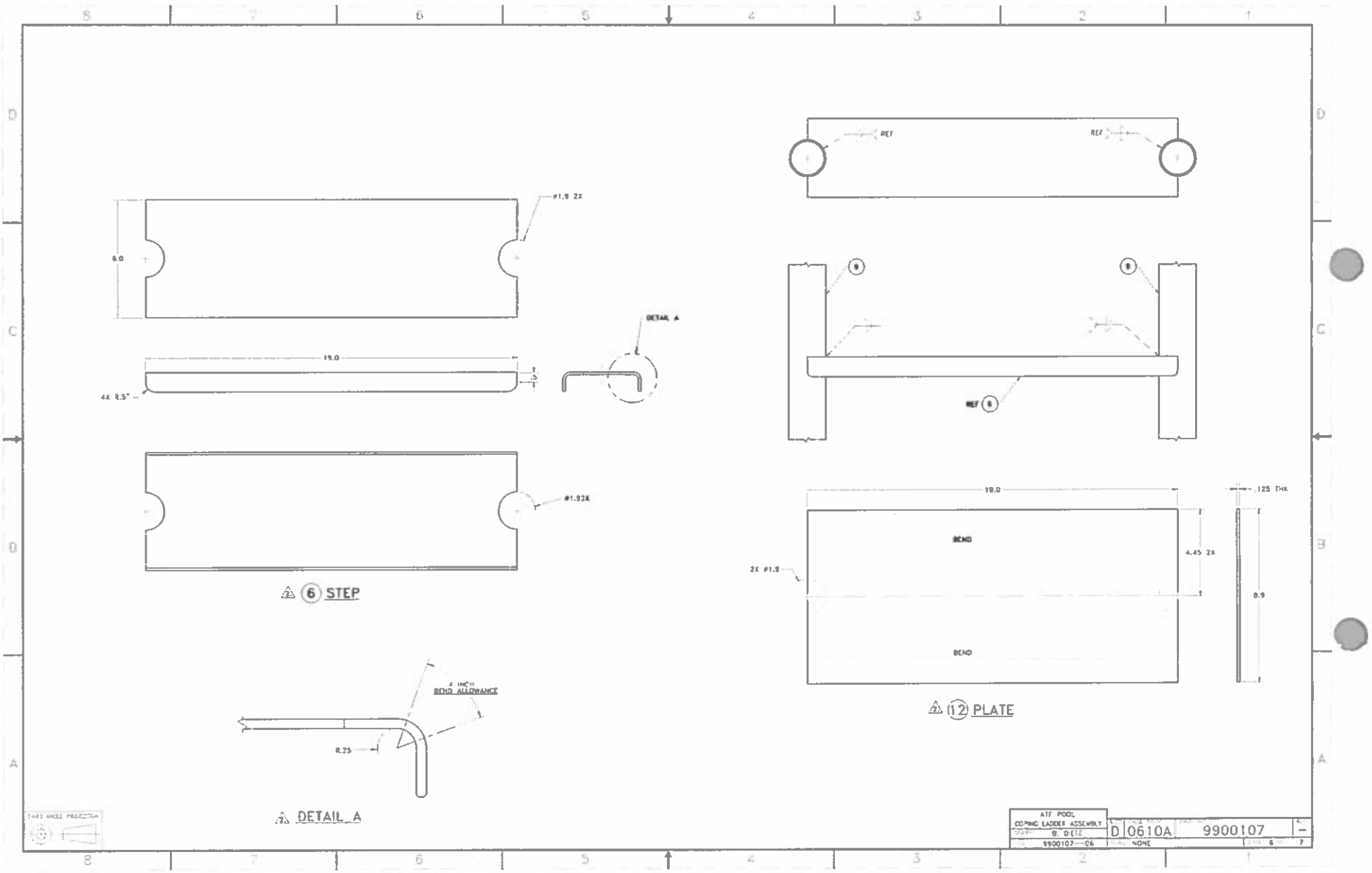

6.0
ø1.9 2X
19.0
4X R.5"
DETAIL A
ø1.92X
6 STEP
4 INCH
BEND ALLOWANCE
R.25
DETAIL A
REF
REF
REF 6
19.0
.125 THK
BEND
4.45 2X
2X ø1.9
8.9
BEND
12 PLATE
ATF POOL
COPING LADDER ASSEMBLY
B. DIETZ
9900107—06
D 0610A 9900107
NONE

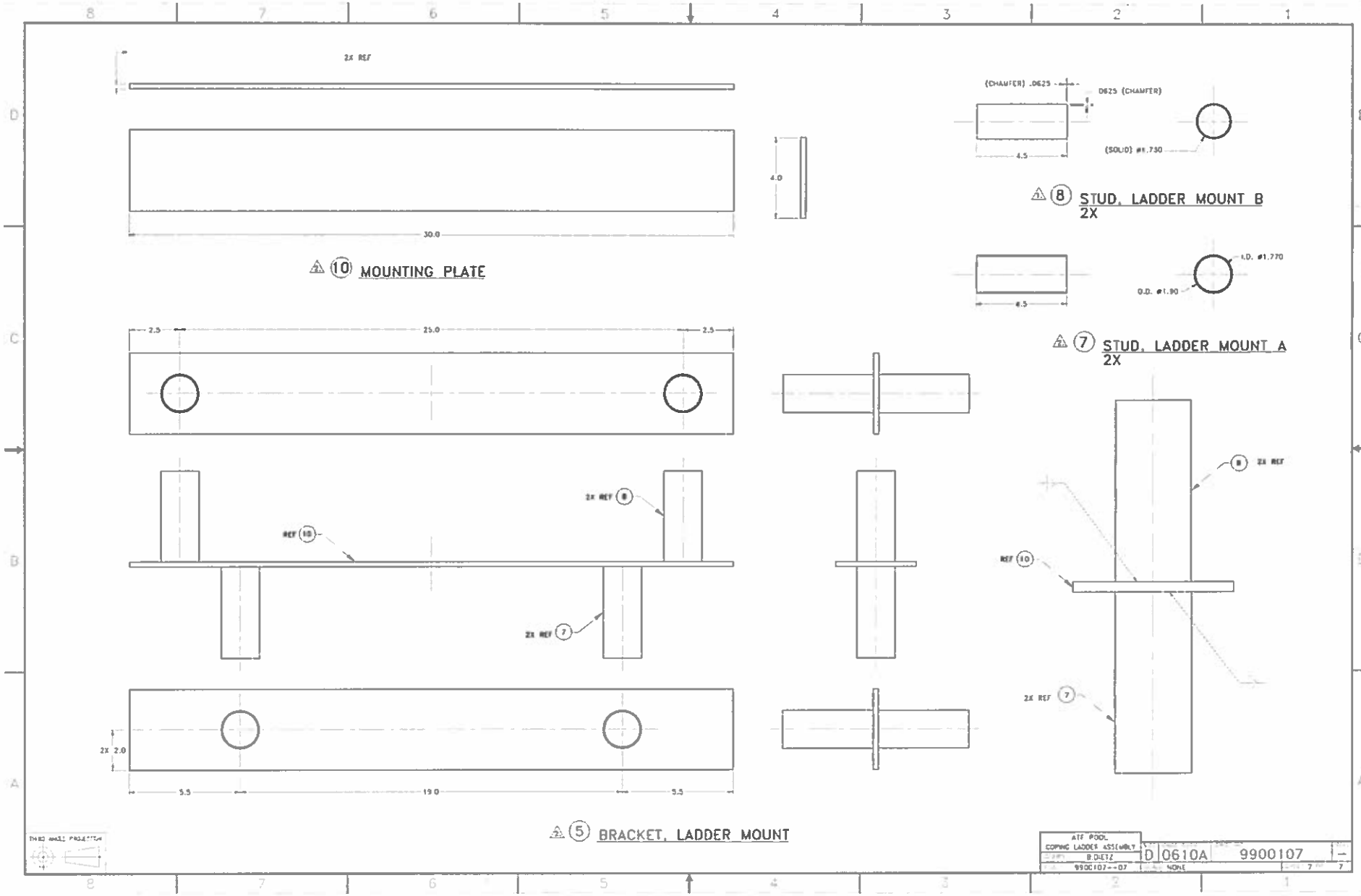
2X REF
30.0
4.0
10 MOUNTING PLATE
(CHAMFER) .0625
.0625 (CHAMFER)
4.5
(SOLID) ø1.730
8 STUD, LADDER MOUNT B
2X
I.D. ø1.770
O.D. ø1.90
4.5
7 STUD, LADDER MOUNT A
2X
2.5
25.0
2.5
2X REF 8
REF 10
2X REF 7
2X 2.0
5.5
19.0
5.5
5 BRACKET, LADDER MOUNT
ATF POOL
COPING LADDER ASS'(MBLY
B DIETZ
9900107--07
D 0610A
9900107
NONE
7 OF 7

NOTES.

1. FABRICATED LADDER STEPS FROM TYPE 304 STAINLESS STEEL WITH SMOOTH, ROUNDED CORNERS. BREAK ALL SHARP EDGES.

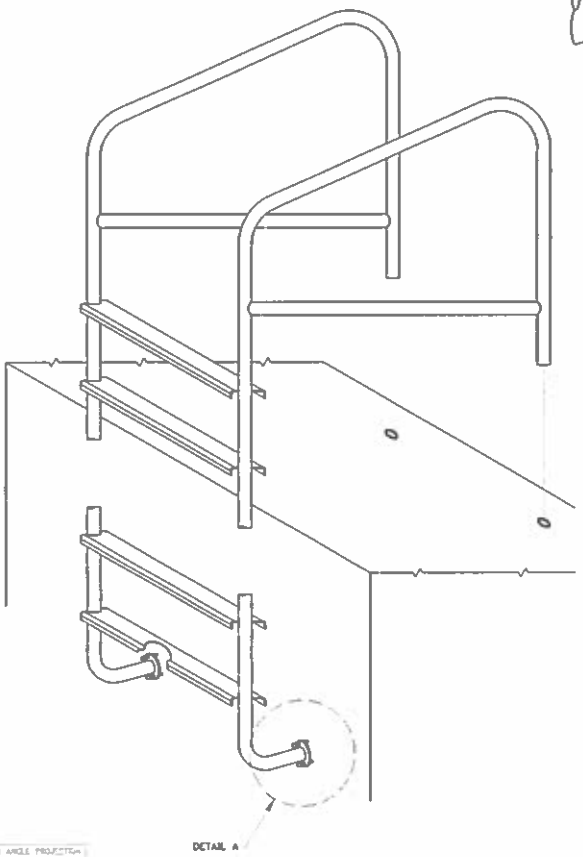

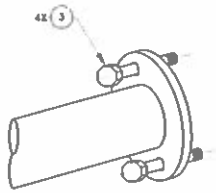

DETAIL A

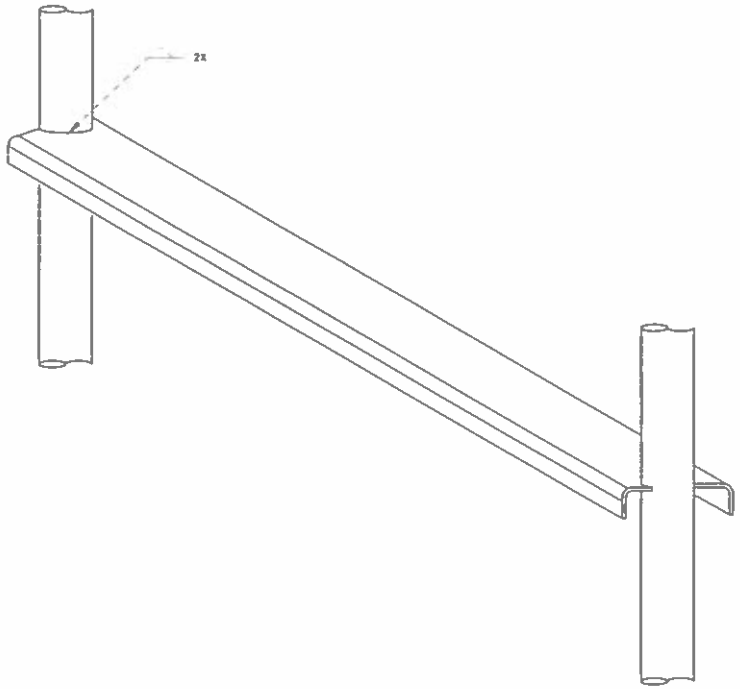

					AR		4			PLATE, 1/8 INCH THK (7 INCH X 20.5 INCH)	CRES			
					4		3			BOLT, HEX HD, W/SHOULDER .375 INCH X 16 X 1.75 INCH	CRES			
					X	AR	2	0610A	9900108-5	STEP, LADDER	CRES			
					X		1	0610A	9900108-1	TRAINING POOL COPING LADDER	CRES			
-8	-5	-4	-3	-2	-1		FIND NO.	CAGE CODE	PART NO. OR IDENTIFYING NO.	NOMENCLATURE OR DESCRIPTION	MATERIAL	SPECIFICATION	NOTE	

CTY PER 4531

PARTS LIST

UNLESS OTHERWISE SPECIFIED
DIMENSIONS ARE IN INCHES
TOLERANCES ON:
.X ±
.XX ±
.XXX ±
FRACTIONS ±
ANGLES ±
DECIMALS ±
BREAK SHARP EDGES YES
REMOVE BURRS ✓
FINISH POLISHED TO 320 GRIT
MATERIAL STAINLESS STEEL T304

ADDITIONAL NF | NEXT ASSY | USED ON
APPLICATION

NAVAL DIVING & SALVAGE TRAINING CENTER
PANAMA CITY, FLORIDA 32407

DWG NO 9900108--01
DRAWN B.DIETZ 7/8/2016
CHECKED R. DAVIS
APPROVED E. DELANEY
R. GARDENER
CHIEF ENGINEER
C#O ROTAN
PROJECT NAVFAC

TRAINING POOL COPING LADDER

SIZE D | CAGE CODE 0610A | DWG NO 9900108 | REV -

SCALE NONE | SHEET 1 OF 2

REVISIONS

ZONE	REV	DESCRIPTION	DATE	APPROVED
	-	ORIGINAL ISSUE		

THIRD ANGLE PROJECTION

DO NOT SCALE THIS DRAWING

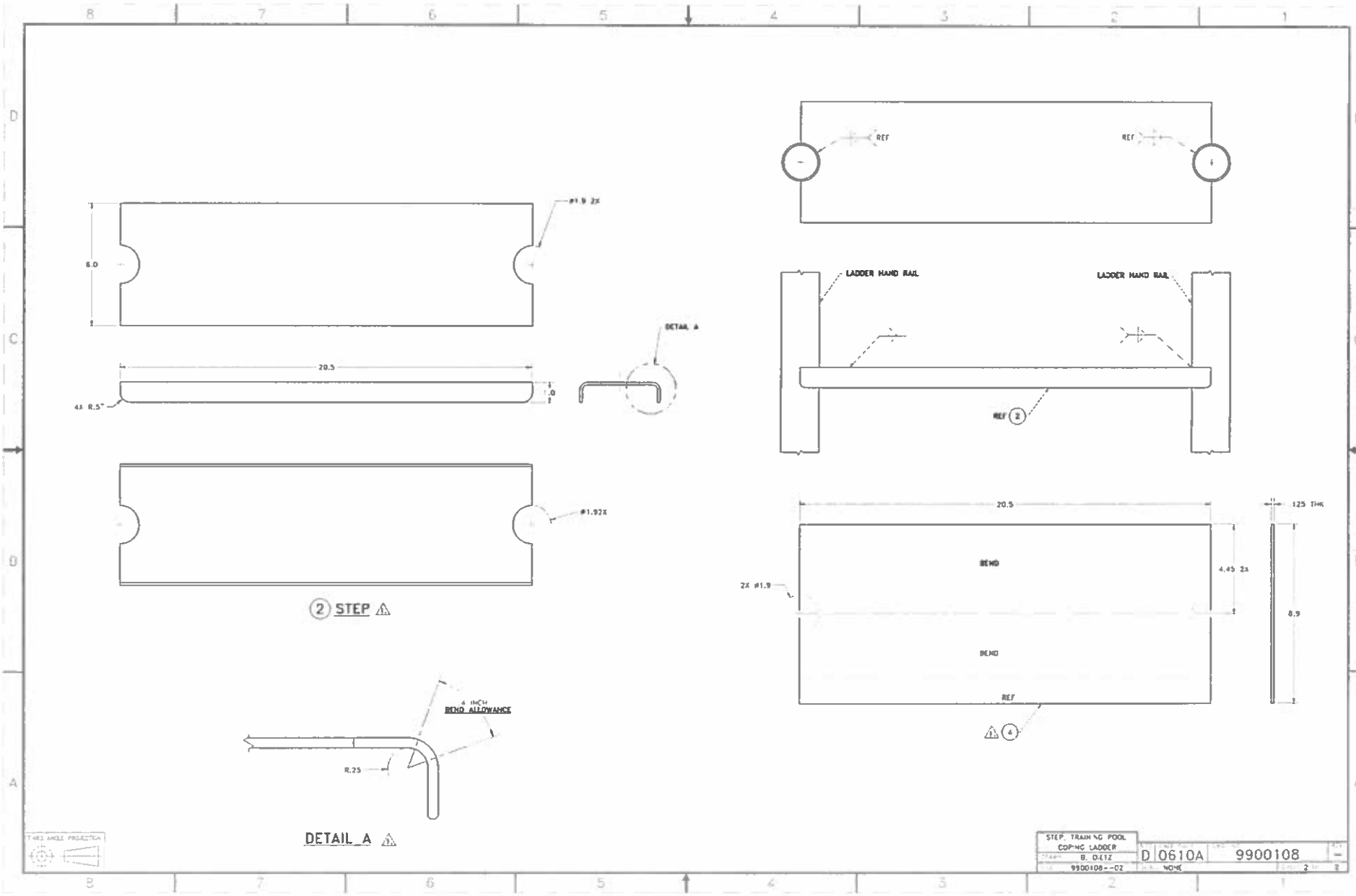

6.0
ø1.9 2X
20.5
1.0
4X R.5"
DETAIL A
ø1.92X
2 STEP
4 INCH
BEND ALLOWANCE
R.25
DETAIL_A
REF
REF
LADDER HAND RAIL
LADDER HAND RAIL
REF 2
20.5
.125 THK
BEND
4.45 2X
2X ø1.9
8.9
BEND
REF
4
THIRD ANGLE PROJECTION
STEP, TRAINING POOL
COPING LADDER
B. DIETZ
9900108--02
D 0610A
9900108
NONE
2