REVISIONS			
REV.	DESCRIPTION	DATE	APPROVED
A	Additional fork lit points added. Grooved coupling material changed to stainless. Locknuts specified at mounting points.	10/10/07	JRL

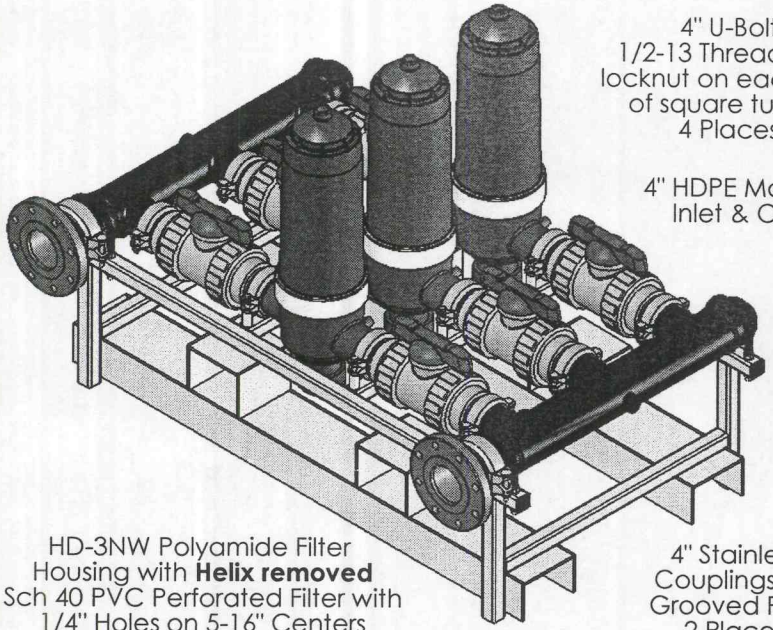

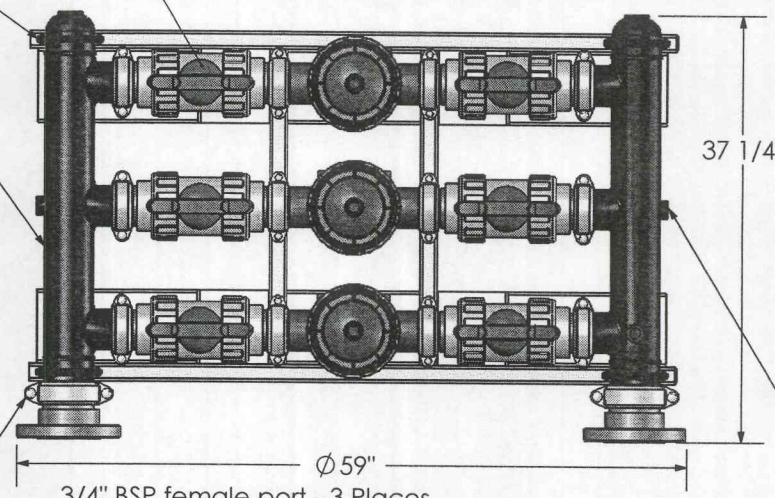

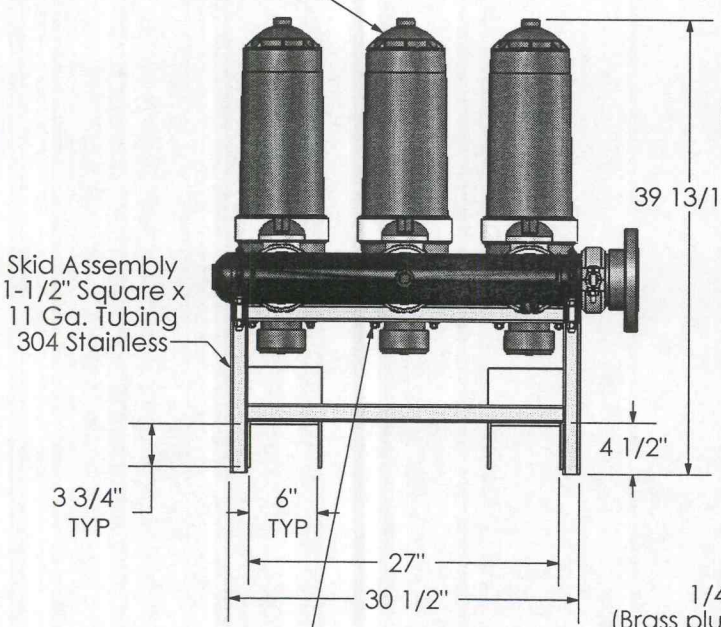

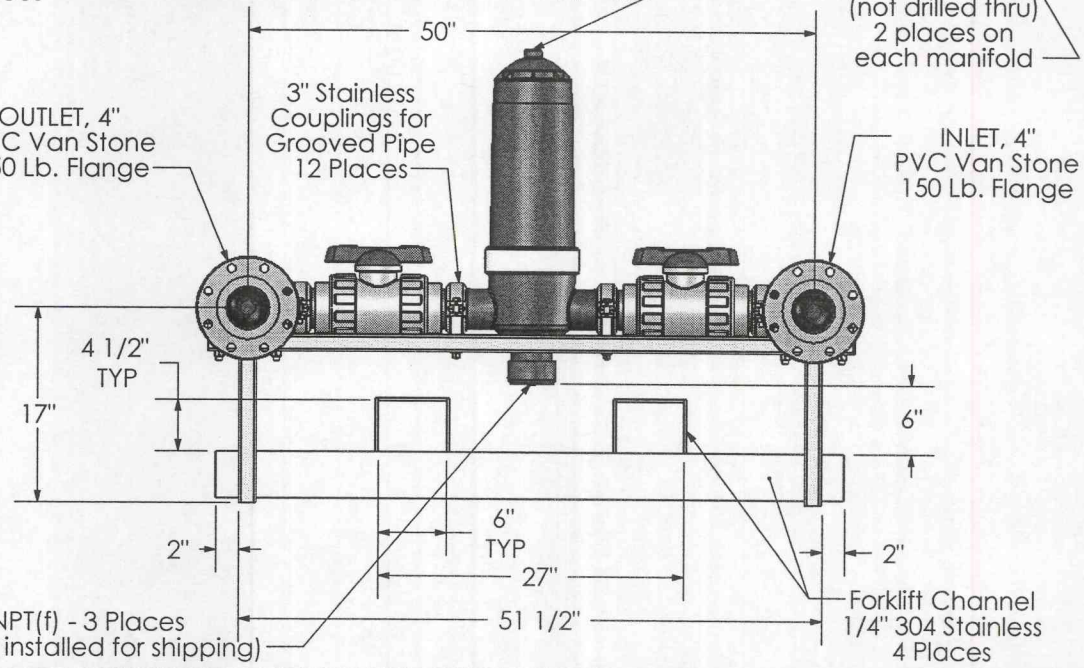

PRODUCT SPECIFICATION	DRAWN	J. Larsen	8/29/05	TITLE Helix Filter System w/Isolation Valves HS3(3)x4-Ø.25 PVC-MOD1
MILLER-LEAMAN INC.	CHECKED			
800 Orange Ave. Daytona Beach FL 32114	ENG APPR.			
	MKT APPR.			
	SHEET 1 OF 1			

Rev. A