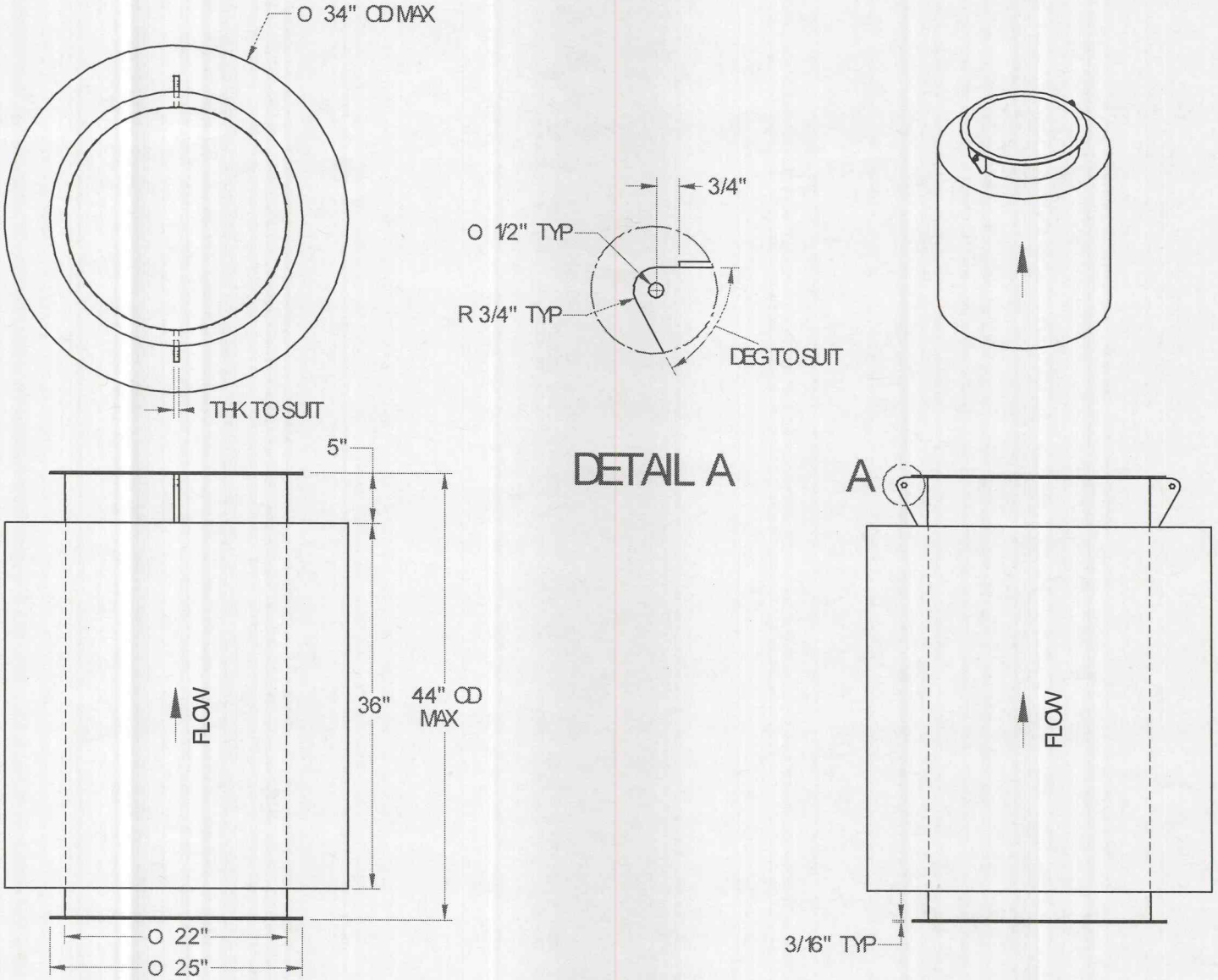

Figure 1. Tubular Silencer overall dimension