UNCLASSIFIED

				REFERENCES & TOLERANCES	4	B
				GENERAL NOTES	5	M
				GENERAL NOTES	5-1	J
1	AIR TRAP	VAR	ATM	ASSEMBLY	6	H
1	———	GMET	ATM	CAP	7	H
1	———	GMET	ATM	CAP	8	H
1/2	MSTRE TRAP	VAR	150	ASSEMBLY	11	H
1/2	———	CRES316L	150	BODY	12	H
1-1/2	AIR TRAP	CUNI	150	ASSEMBLY	13	C
1-1/2	———	CUNI	150	CAP	13-1	B
1-1/2	MSTRE SEP	VAR	ATM	ASSEMBLY	14	C
1-1/2	———	CRES	ATM	BODY, ASSY 14	15	C
	———	CRES	ATM	COVER, ASSY 14	16	C
1-1/2	P-TRAP	VAR	ATM	ASSEMBLY	17	H
1-1/2	———	TIN BRZ	ATM	BODY, ASSY 17	18	H
1-1/2	RUN TRAP	VAR	ATM	ASSEMBLY	19	H
1-1/2	———	TIN BRZ	ATM	BODY, ASSY 19	20	H

UNCLASSIFIED

UNCLASSIFIED

B	1	DRAIN TRAP	VAR	ATM	ASSEMBLY	30	H
M	1	———	VAR	ATM	BODY, ASSY 30	31	H
J	1.50	S-TRAP	VAR	150	ASSY W/1.001PS VENT & 3/4-16 PL	32	H
	1.50	———	TIN BRZ	150	BODY, ASSY 32	33	H
	2.00	GT	VAR	150	ASSEMBLY	34	E
H	2.00	———	CUNI	150	BODY, ASSY 34	35	E
H		———	CUNI	—		35-1	E
H		———	CUNI	—		35-2	G
		———	NAV BRS	—	COVER, ASSY 34	36	E
	1.00	S-TRAP	VAR	150	ASSY W/1.001PS VENT & .750-16PL	37	H
H	1.00	———	TIN BRZ	150	BODY, ASSY 37	38	H
H	1.50	GT	VAR	150	ASSEMBLY	39	F
C	1.50	———	CUNI	150	BODY, ASSY 39	40	F
B		———	CUNI	—		40-1	F
C		———	CUNI	—		40-2	F
C	.50	P-TRAP	VAR	150	ASSY W/.5625-18UNF-2A PLUG	41	H

C H H H H

TRAPS

GENERAL DYNAMICS
Electric Boat Division
Groton, Connecticut 06340
Code Ident. No. 96169

SIZE	CODE IDENT NO.	DRAWING NO.	REV
B	96169	2621-745-01	M

SHEET 3

EB-4203

UNCLASSIFIED

UNCLASSIFIED

			REVISIONS	2
			REVISIONS	2-1
			REVISIONS	2-2
			REVISIONS	2-3 / 2-4 / V
			REVISIONS	2-5 / 2-6 / AK
			INDEX	3
			INDEX	3-1
			INDEX	3-2 / 3-3 / AM
			REFERENCES & TOL	4
			GENERAL NOTES	5
			GENERAL NOTES	5-1
3/4-16UNF-2A MS THD	NICU	3000	MS PLUG	6
7/16-20UNF-2A MS THD	NICU	3000	MS PLUG	7
5/16-24UNF-2A MS THD	NICU	5100	MS PLUG	8
1/4 IPS (SILBRZ)	CUNI	1500	PIPE CAP	9
2-1/2IPS (SILBRZ)	CUNI	800	PIPE CAP	10
1/4 IPS (SILBRZ)	CUNI	3000	PIPE CAP	11
7/16-20UNF-2A MS THD	TIN BRONZE	3000	MS PLUG	12
1/2-14 NPSH	TIN BRONZE	ATM	FEMALE CAP HOSE THD	13
3/4-16UNF-2B	BRASS	ATM	DUST CAP ASSY	14
2-11-1/2 NPSH (F)	TIN BRONZE	ATM	FEMALE CAP ASSY	15
7/8-14UNF-2B	BRASS	ATM	DUST CAP ASSY	16
9/16-18UNF-2A	NICU	4500	MS PLUG	17

UNCLASSIFIED

UNCLASSIFIED

1 IPS	PVC	100	CAP	42	S
6-20UNF-2A	PVC	150	PLUG	43	S
1/2-11-1/2 NPSH	TIN BRZ	ATM	PLUG ASSY	44	AC
1/2-11-1/2 NPSH	TIN BRZ	ATM	PLUG	45	S
29/32 ID	CU ALLOY	—	CHAIN RING	46	AC
/4-11-1/2 NPSH	TIN BRZ	ATM	CAP ASSY	47	AC
1/4-11-1/2 NPSH	TIN BRZ	ATM	CAP	48	S
8 IPS (SB)	CUNI	700	CAP	49	Z
8 IPS (SB)	CUNI	500	CAP	50	S
50 IPS (SB)	CUNI	3000	CAP	51	S
1/4 IPS	PVC	100	CAP	52	S

THIS DOCUMENT IS SUBJECT TO SPECIAL EXPORT CONTROLS AND EACH TRANSMITTAL TO FOREIGN GOVERNMENTS OR FOREIGN NATIONALS MAY BE MADE ONLY WITH PRIOR APPROVAL OF COMMANDER NAVAL SHIP SYSTEMS COMMAND.

PLUGS & CAPS

GENERAL DYNAMICS
Electric Boat Division
Groton, Connecticut 06340
Code Ident. No. 96169

SIZE	CODE IDENT NO.	DRAWING NO.	REV
B	96169	2621-625-03	AL

SHEET 3

EB-4203

UNCLASSIFIED

APPLICABLE GENERAL NOTES ON SHEET 5	
1	
2	
9	

RUNNING TRAP
$1\frac{1}{2}$ IPS SB
ATMOSPHERIC WP

DESIGNED TO MATE WITH
.124 NOM (.109 MIN) WALL TUBING.

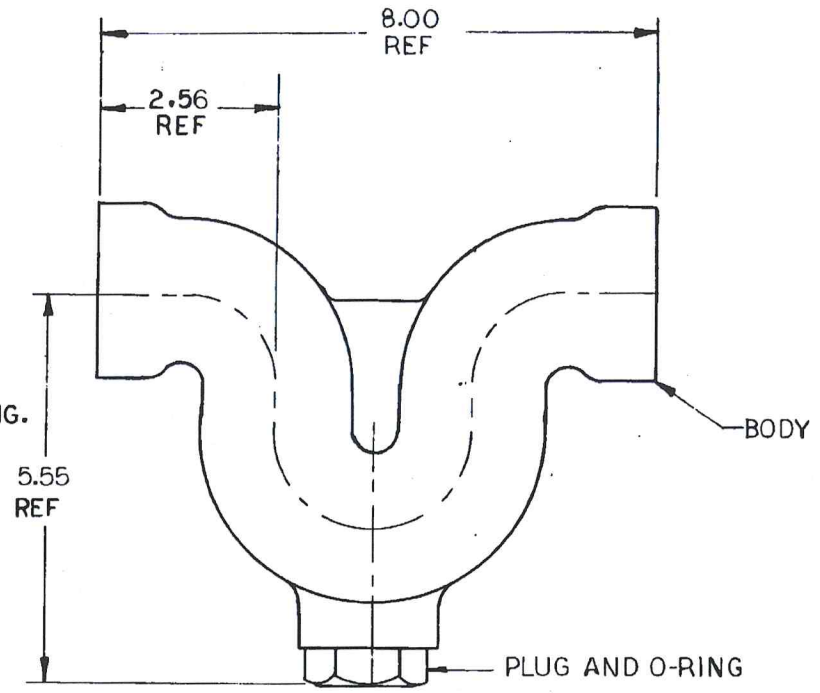

* MS28778-8

LIST OF PIECES FOR ONE ASSEMBLY 19

DETAIL DWG PCNO	DETAIL DWG REF	QTY	DESCRIPTION	MATL
20	THIS DWG	1	BODY	TIN BRONZE, QQ-C-390, ALY D4, TY I
6	2	1	PLUG	NICU, QQ-N-281, ~~CLB, CD~~
~~106~~	~~3~~	1	O-RING, *	BUNA-N, MIL-P-5510

THIS DOCUMENT IS SUBJECT TO SPECIAL EXPORT CONTROLS AND EACH TRANSMITTAL TO FOREIGN GOVERNMENTS OR FOREIGN NATIONALS MAY BE MADE ONLY WITH PRIOR APPROVAL OF COMMANDER NAVAL SHIP SYSTEMS COMMAND.

MQ	Y. Y	W.T.	NRP	6/3/4		APPROVAL NOT REQD

GENERAL DYNAMICS
Electric Boat Division
Code Ident No. 96169

TRAPS

SIZE	CODE IDENT NO.	DRAWING NO.	REV
B	96169	2621-745-01	H

SCALE NONE | SHEET 19

APPLICABLE GENERAL NOTES ON SHEET 5	
1	
2	
~~3~~	
4	
5	
6	
7	
7A	
7B	
7C	
7D	
7E	
7F	
8	
8A	
8B	
8C	
9	
11	
19	

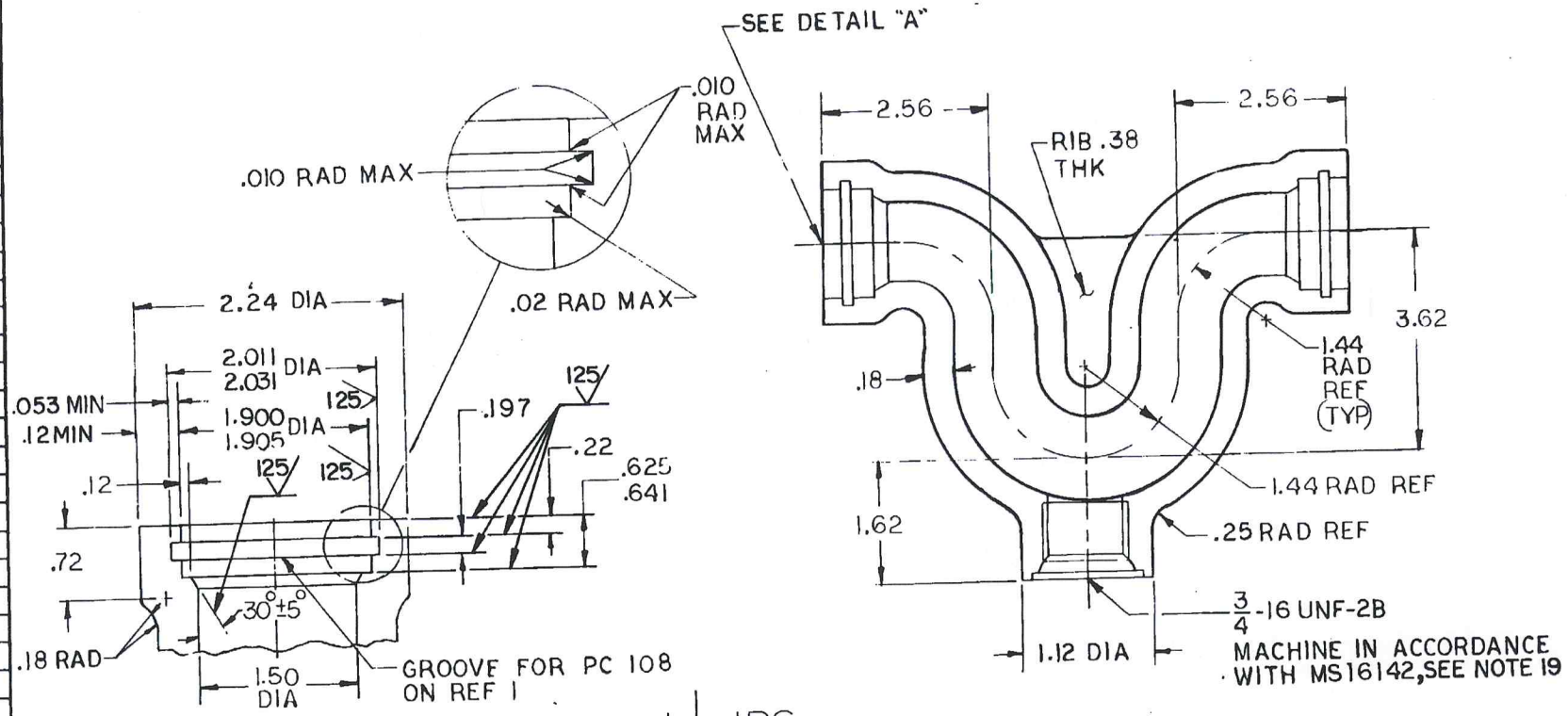

DESIGNED TO MATE WITH .124 NOM (.109 MIN) WALL TUBING.

THIS DOCUMENT IS SUBJECT TO SPECIAL EXPORT CONTROLS AND EACH TRANSMITTAL TO FOREIGN GOVERNMENTS OR FOREIGN NATIONALS MAY BE MADE ONLY WITH PRIOR APPROVAL OF COMMANDER NAVAL SHIP SYSTEMS COMMAND.

PATTERN NO. 160393

MAX WP: ATMOSPHERIC MATL: TIN BRONZE SPEC: QQ-C-390, ALLOY D4, TYPE I	PC NO. 20	GENERAL DYNAMICS Electric Boat Division Groton, Connecticut 06340 Code Ident. No. 96169	TRAPS			
			SIZE	CODE IDENT NO.	DRAWING NO	REV
			B	96169	2621-745-01	H
			SCALE NONE		SHEET 20	

APPROVAL NOT REQD