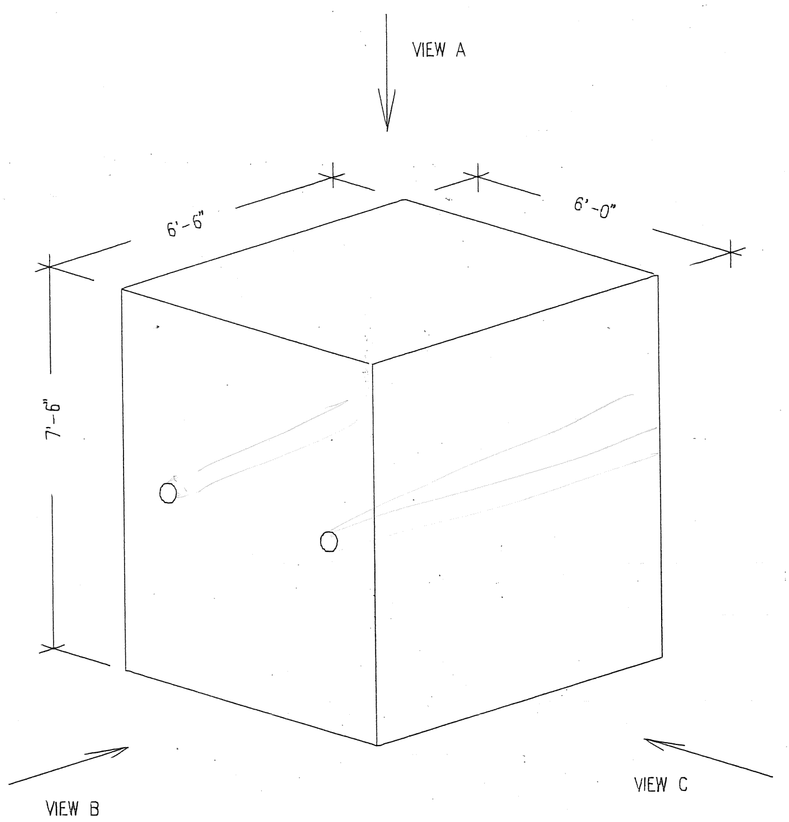

ISOMETRIC VIEW
NOT TO SCALE

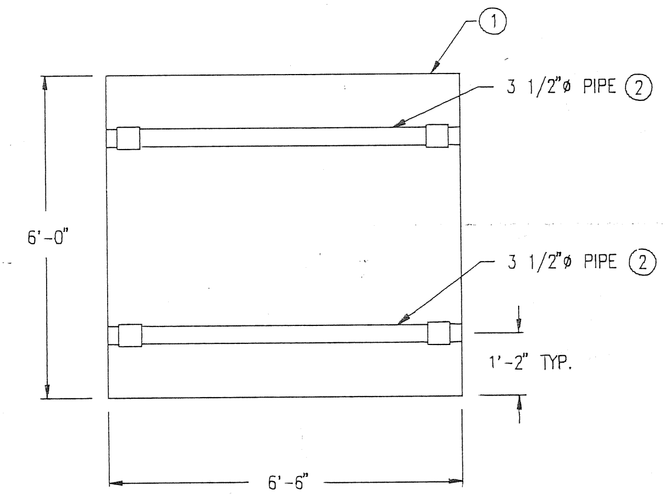

VIEW A
SCALE: 1/2" = 1'-0"

NOTE: EMBEDDED ITEMS SHOWN FOR CLARITY

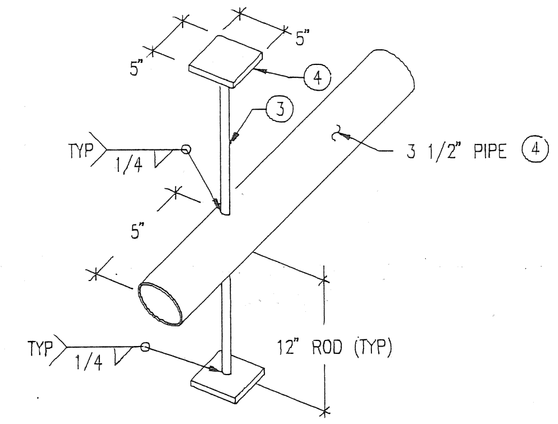

PIPE-REBAR DETAIL
NOT TO SCALE

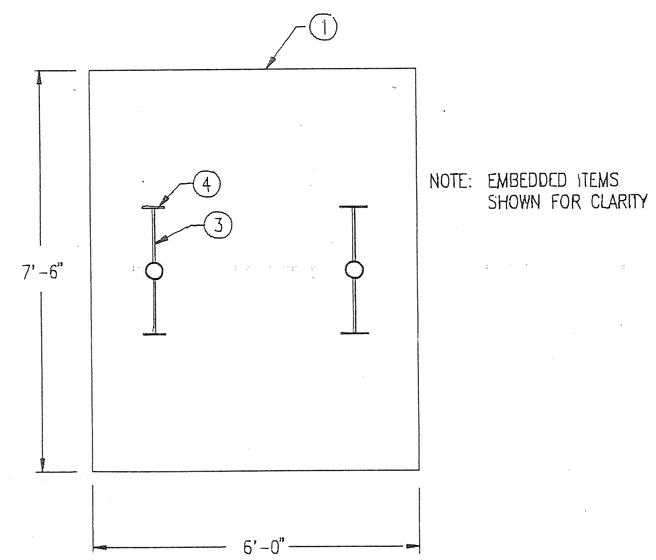

NOTE: EMBEDDED ITEMS SHOWN FOR CLARITY

VIEW B
SCALE: 1/2" = 1'-0"

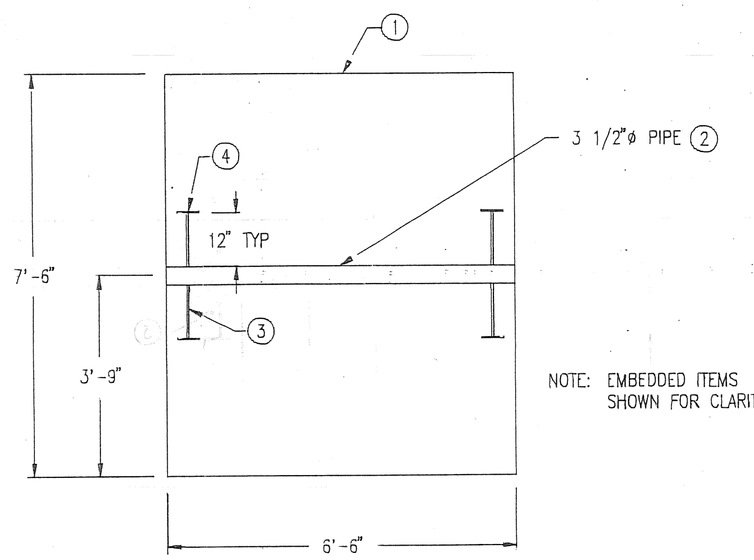

NOTE: EMBEDDED ITEMS SHOWN FOR CLARITY

VIEW C
SCALE: 1/2" = 1'-0"

PART NO.	DESCRIPTION	QTY	MATERIAL	MATERIAL SPEC OR STOCK CAT NO.
1	CONCRETE	10.9 CY		SEE NOTE 6.
2	3 1/2" SCH 40 PIPE	13 LF	STAINLESS STL	PER AISI 316
3	1/2"ø ROD	8 LF	STAINLESS STL	PER AISI 316
4	PL 3/8"	0.5 SF	STAINLESS STL	PER AISI 316

NOTES

1. THIS DESIGN IS FOR THE HIGH BASELINE TYPE "F" DOCKING BLOCKS. THE ESTIMATED WEIGHT IS 48300 LBS WET, 43900 LBS DRY.
2. THE TOLERANCES OF THE EXTERIOR BLOCK DIMENSIONS SHALL BE AS FOLLOWS: 7'-6" ± 1/4", 6'-6" ± 1/2", 6'-0" ± 1/2"
3. ALL SIDES SHALL BE SQUARE ± 0.75 DEGREES.
4. ALL BLOCK CORNERS SHALL BE CHAMFERED 2".
5. SURFACES SHALL BE SMOOTH, DENSE AND FREE FROM HONEYCOMBS, DENTS, PROMINENT GRAIN MARKINGS, BULGES OR DEPRESSIONS MORE THAN 1/8" IN 6 FEET AND ANY OTHER IRREGULARITIES.
6. USE ASTM C150 TYPE I CONCRETE, MINIMUM COMPRESSIVE STRENGTH @ 28 DAYS SHALL BE 4000 PSI. FIBER REINFORCEMENT SHALL BE USED AT 1.5 LBS PER CUBIC YARD OF CONCRETE (SEE CONCRETE SPECIFICATION FOR DETAILS).
7. SHOP 72 SHALL WEIGH EACH BLOCK PRIOR TO INITIAL USE AND MARK THE WEIGHT DIRECTLY ONTO THE BLOCK. (ALSO PERMANENT IDENTIFICATION NO.)
8. ALL WELDS PER WE-860, VISUAL INSPECTION ONLY, NO DOCUMENTATION REQUIRED.
9. SHOP 72 SHALL CLEARLY MARK EACH BLOCK WITH THE FOLLOWING (ON ALL 4 SIDES):
   "FIBER REINFORCED BLOCK"
   "NO STEEL REINFORCEMENT"

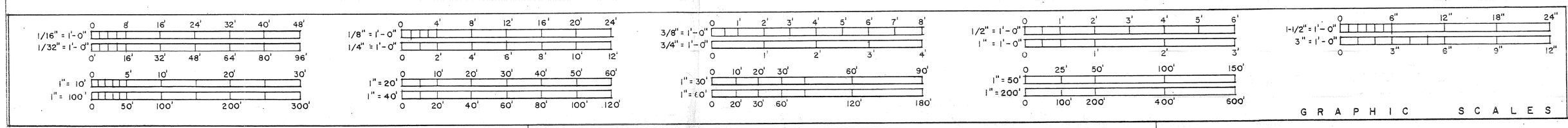

CODE	CONCURRENCE	DATE
912.4		3/11/93
250.2		3/11/93

SYMBOL	DESCRIPTION	REV. BY	APPROVED	DATE
	REVISIONS			

PRODUCTION DEPARTMENT
FACILITIES DIVISION
FACILITIES ENGINEERING BR

DEPARTMENT OF THE NAVY NAVAL SEA SYSTEMS COMMAND
PEARL HARBOR NAVAL SHIPYARD
PEARL HARBOR, HAWAII

DESIGN C912-PS 3/11/93
CHECK C912-PS 3/11/93
BRANCH HEAD 9-17-3 3-11-93
APPROVED BY 3-11-93
FACILITIES MANAGER DATE

NAVAL SHIPYARD PEARL HARBOR, HAWAII

HIGH BASELINE TYPE "F" DOCKING BLOCK DESIGN WITH FIBER REINFORCEMENT

EXPERIMENTAL BLOCK PROGRAM

PROJECT NO

NAVFAC DWG NO 7457842 — DWG NO

CONSTR. CONTR. NO. N62471

NAVFAC SPEC NO — SHT OF

PH-SYD 11012/1A REV. (6-88)

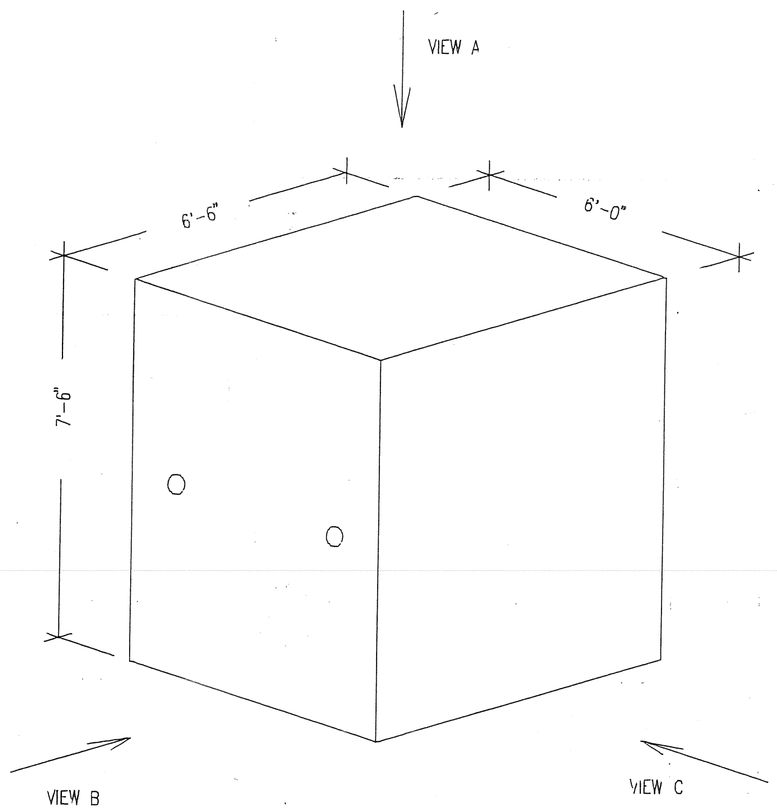

ISOMETRIC VIEW
NOT TO SCALE

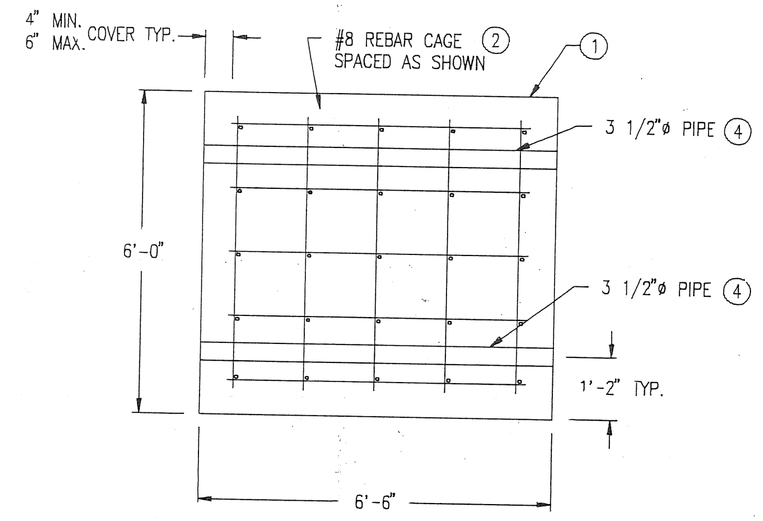

VIEW A
SCALE: 1/2" = 1'-0"

NOTE: REBARS AND PIPE SHOWN FOR CLARITY

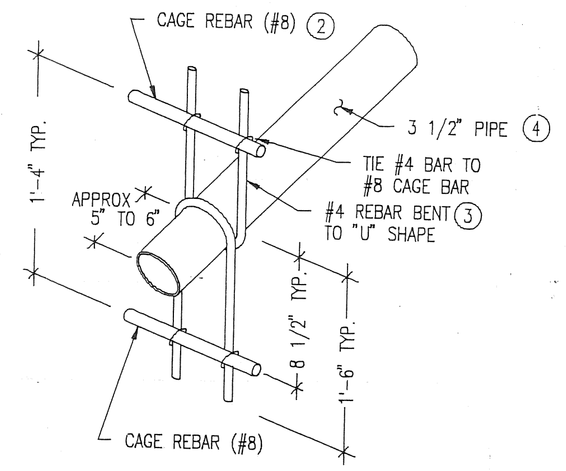

PIPE-REBAR DETAIL
NOT TO SCALE

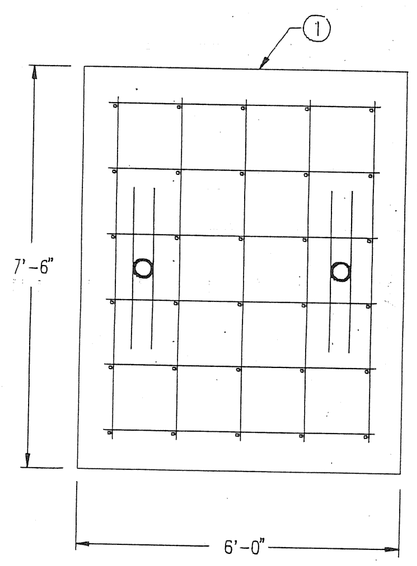

NOTE: REBARS SHOWN FOR CLARITY

VIEW B
SCALE: 1/2" = 1'-0"

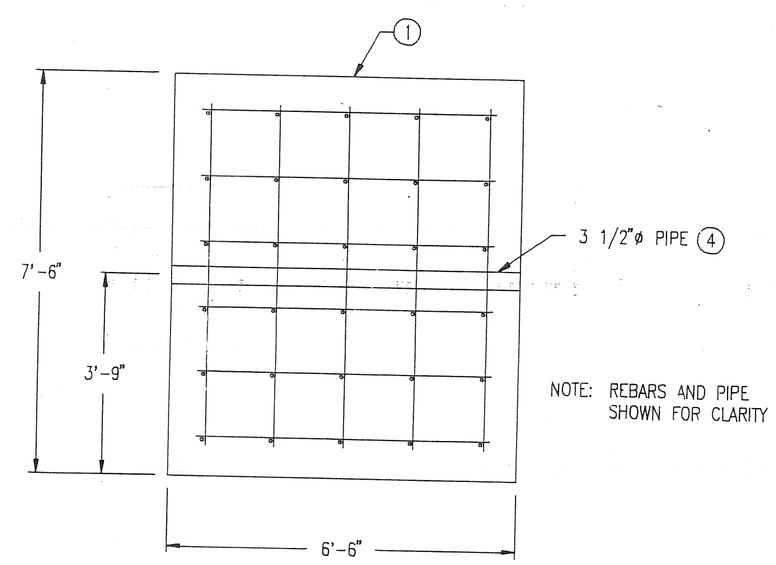

NOTE: REBARS AND PIPE SHOWN FOR CLARITY

VIEW C
SCALE: 1/2" = 1'-0"

PART NO.	DESCRIPTION	QTY	MATERIAL	MATERIAL SPEC OR STOCK CAT NO.
1	CONCRETE	10.9 CY		SEE NOTE 6.
2	REBAR CAGE	1 EA	STEEL	SEE NOTE 8.
3	#4 REINFORCING BAR	32 LF	STEEL	GRADE 40 BARS
4	3 1/2"ø PIPE, SEAMLESS	13 LF	STAINLESS	FOR ATSI 316 PLATE NOT DRIPPED

NOTES

1. THIS DESIGN IS FOR THE HIGH BASELINE TYPE "F" DOCKING BLOCKS. THE ESTIMATED WEIGHT IS 48300 LBS WET, 43900 LBS DRY.
2. THE TOLERANCES OF THE EXTERIOR BLOCK DIMENSIONS SHALL BE AS FOLLOWS: 7'-6" ± 1/4", 6'-6" ± 1/2", 6'-0" ± 1/2"
3. ALL SIDES SHALL BE SQUARE ± 0.75 DEGREES.
4. ALL BLOCK CORNERS SHALL BE CHAMFERED 2".
5. SURFACES SHALL BE SMOOTH, DENSE AND FREE FROM HONEYCOMBS, DENTS, PROMINENT GRAIN MARKINGS, BULGES OR DEPRESSIONS MORE THAN 1/8" IN 6 FEET AND ANY OTHER IRREGULARITIES.
6. USE ASTM C150 TYPE I CONCRETE, MINIMUM COMPRESSIVE STRENGTH @ 28 DAYS SHALL BE 4000 PSI, MAXIMUM WATER-CEMENT RATIO SHALL BE 0.40. PLASTICIZER USE FOR EASE OF PLACEMENT IS ALLOWED.
7. SHOP 72 SHALL WEIGH EACH BLOCK PRIOR TO INITIAL USE AND MARK THE WEIGHT DIRECTLY ONTO THE BLOCK. (ALSO PERMANENT IDENTIFICATION No.)
8. THE MAIN STEEL REINFORCEMENT SHALL BE PREFABRICATED BY A PRIVATE CONTRACTOR AND DELIVERED TO THE WORKSITE. THE REINFORCEMENT SHALL CONFORM TO NAVFAC DRAWING NUMBER 7457840, LATEST REVISION.

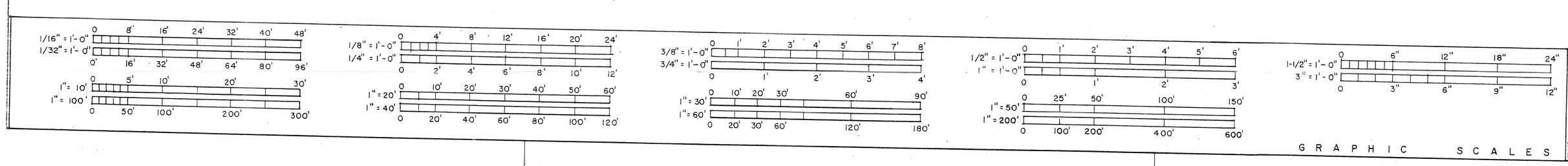

SYMBOL	DESCRIPTION	REV. BY	APPROVED	DATE
	REVISIONS			

CODE	CONCURRENCE	DATE
912.4		3/10/93
250.2		3/10/93

PRODUCTION DEPARTMENT
FACILITIES DIVISION
FACILITIES ENGINEERING BR

DEPARTMENT OF THE NAVY NAVAL SEA SYSTEMS COMMAND
PEARL HARBOR NAVAL SHIPYARD
PEARL HARBOR, HAWAII

DESIGN 912.2-83 3/9/93
CHECK 912.2 3-9-93
BRANCH HEAD 912.2 3-11-93
APPROVED BY 3-11-93
FACILITIES MANAGER DATE

NAVAL SHIPYARD PEARL HARBOR, HAWAII

HIGH BASELINE TYPE "F" DOCKING BLOCK

PROJECT NO
NAVFAC DWG NO 7457839
CONSTR. CONTR. NO N62471
NAVFAC SPEC NO
DWG NO
SHT 1 OF 1

PH-SYD 11012/1A REV. (6-88)

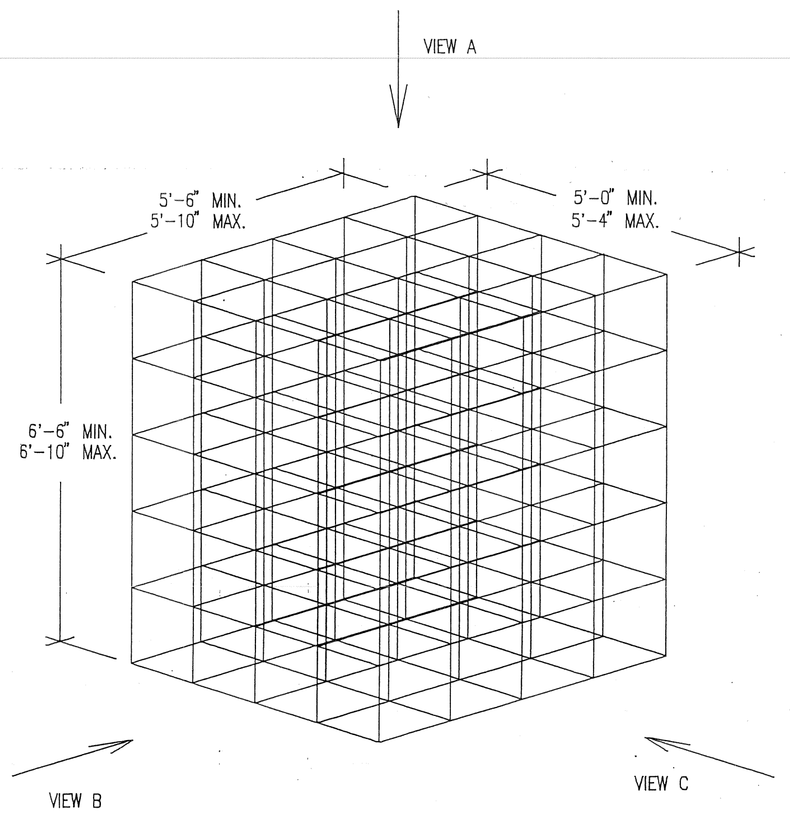

ISOMETRIC VIEW
NOT TO SCALE

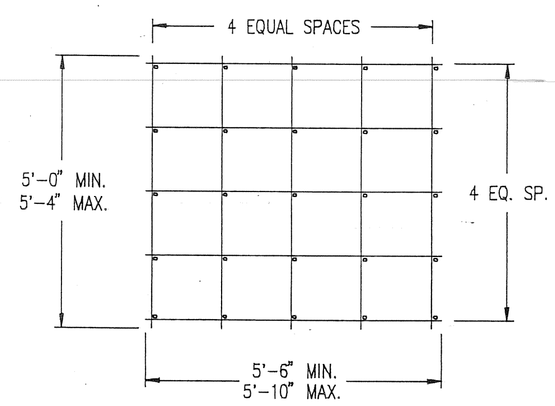

VIEW A
SCALE: 1/2" = 1'-0"

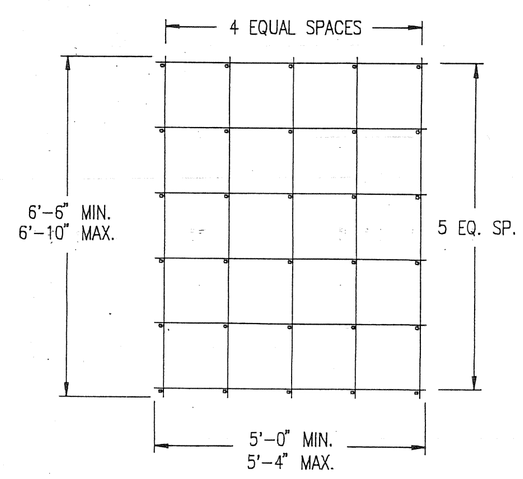

VIEW B
SCALE: 1/2" = 1'-0"

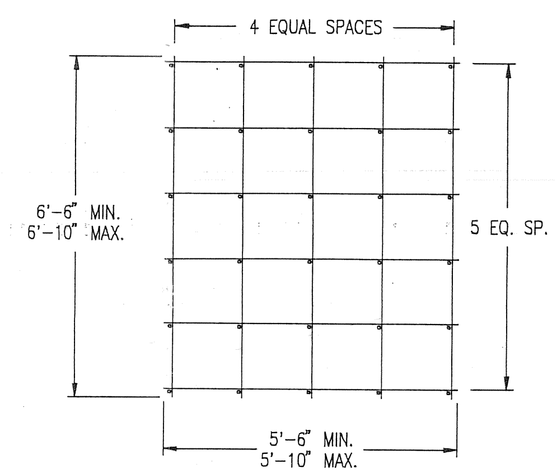

VIEW C
SCALE: 1/2" = 1'-0"

NOTES

1. THIS DESIGN IS FOR THE HIGH BASELINE TYPE "F" DOCKING BLOCK PREFABRICATED MAIN STEEL REINFORCEMENT.
2. ALL REINFORCING MEMBERS SHOWN ARE #8 BARS, GRADE 40.
3. PERMISSIBLE TO BEND BARS AT THE CORNERS OF THE REBAR CAGES FOR EASE OF CONSTRUCTION.
4. ALL REBARS SHALL BE FREE FROM RUST ON DELIVERY.
5. REINFORCEMENT SHALL BE WIRE TIED AT ALL INTERSECTIONS.

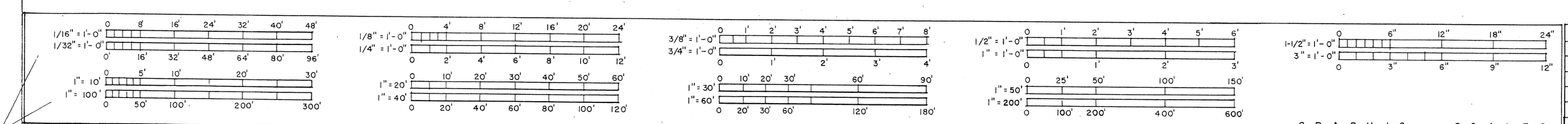

CODE	CONCURRENCE	DATE
9124	RG	3/10/93

SYMBOL	DESCRIPTION	REV. BY	APPROVED	DATE
	REVISIONS			

PRODUCTION DEPARTMENT
FACILITIES DIVISION
FACILITIES ENGINEERING BR

DEPARTMENT OF THE NAVY — NAVAL SEA SYSTEMS COMMAND
PEARL HARBOR NAVAL SHIPYARD
PEARL HARBOR, HAWAII

DESIGN: 3/9/93
CHECK: 9124 3-9-93
BRANCH HEAD: 9124 3-11-93
APPROVED BY: for 3-9-93
FACILITIES MANAGER — DATE

NAVAL SHIPYARD — PEARL HARBOR, HAWAII

HIGH BASELINE TYPE "F" DOCKING BLOCK PREFABRICATED REINFORCEMENT

NAVFAC DWG NO 7457840
DWG NO
PROJECT NO
CONSTR. CONTR. NO N62471
NAVFAC SPEC NO
SHT OF

PH-SYD 11012/1A REV. (6-88)