STATEMENT OF OBJECTIVES

Improved Battery System (IBS)

Prepared by

Program Manager - Expeditionary Power Systems

Marine Corps Systems Command

1.0 Program Requirements

This document addresses both minimally required and desired levels of performance for the Improved Battery System (IBS) being purchased. All Critical Performance Parameters (CPPs) are essential to the performance of the unit, and must be met to satisfy the Government's minimum requirements. All other elements not identified as CPPs are desired levels of performance that add value to the IBS. The offeror may also propose their Value Added features not listed here.

1.1 Product Specification

The offerors proposed, managed, and controlled Product Specification shall fully address and describe performance attributes, operational environment, supportability, and manufacturing attributes of their IBS. The Product Specification shall be provided back to the Government in response to this solicitation. Upon contract award, the Product Specification will be incorporated into the contract as the binding configuration document.

1.2 Delivery

The contractor shall accomplish delivery of the specified number of IBS items as set forth in the contract delivery orders. Government verification and testing will be conducted on first articles prior to series production and acceptance.

2.0 Reference Documents

Number	Title	Revision
FED-STD-595	Colors Used In Government Procurement	
MIL-HDBK-1857	Grounding, Bonding, Shielding Design Guidelines	
MIL-HDBK-419	Grounding, Bonding And Shielding For Electronic Equipment And Facilities, Volumes 1 & 2	A
MIL-STD-130	Identification Marking Of U.S. Military Property	
MIL-STD-1275	Characteristics Of 28 Volt DC Electrical Systems In Military Vehicles	D
MIL-STD-461	Requirements For The Control Of Electromagnetic Interference Characteristics Of Subsystems And Equipment	E
MIL-STD-810F	Environmental Engineering Considerations And Laboratory Tests	F
STANAG 2601	NATO Standardization Agreement - Standardization Of Electrical Systems In Tactical Land Vehicles	
STANAG 4074	Auxiliary Power Unit Connections For Starting Tactical Land Vehicles	31-May-96
TM-S9310-AQ-SAF-010	Navy Lithium Battery Program Responsibilities and Procedures	19-Aug-04
STANAG 4133	Method Of Specifying Electrical Power Supplies: Standard Types Of Electrical Power	7-Jul-93
STANAG 4015	Starter Battery Spaces for Tactical Vehicles	17-Mar-97
MIL-PRF-32143	Value Regulated Lead Acid Battery PRF	
MIL-B-11188H	Lead-Acid Battery General Specification	13-Sep-94

3.0 Work Scope Requirements

This program will be broken into two phases. The first phase will focus on an initial procurement and baseline testing of multiple batteries. The second phase will involve more in-depth testing. Contractors will be expected to support each phase in which their products participate.

3.1 Phase I – Initial Baseline Testing

The first phase of this program will focus on initial baseline testing of multiple batteries. The initial purchase of five (5) batteries will be used to test form and fit, voltage, Cold Cranking Amps (CCA), energy density, cycle life and operational temperature ranges. Phase I is expected to last 6 months. At the end of Phase I, the government will down select to Phase II.

3.2 Phase II – Extensive Testing

Phase II of this program will be more extensive testing on the down-selected batteries. The government anticipates ordering 25-50 additional batteries. Testing will include accelerated life, high temperature, environmental testing, vehicle based testing, and electrical characterization testing. This phase is expected to last 10 months.

3.3 Follow-on purchases

Based on phase II testing, additional purchases may be made to support other programs.

3.4 Technical Support Hours

The contractor shall propose and provide labor categories to support the level of effort listed in Section B. This shall be at fixed hourly rates, with individual tasking to be determined at a later date on an “as needed” basis. Such support might include assistance with refining mission roles, additional/surge field support for test and evaluation, detailed performance analysis; resolution of unique technical problems; or providing remedies for unwarranted failures.

4.0 System Performance Requirements

Two types of IBSs are sought under this solicitation. These two types will be referred to as the High Energy IBS (HEIBS) and the High Power IBS (HPIBS). Systems requirements are broken into general and type specific requirements. General Requirements shall be applicable to all IBSs regardless of type. Type specific requirements are then set aside for specific HEIBS and HPIBS systems. Proposals must satisfy all requirements marked as "Critical Performance Parameter." Other requirements shall be traded off in order to obtain BEST VALUE for the Government.

Additional Information is included on Vehicle Integration Support. This information is to help the offeror understand additional support which may be requested by the Government to make full and efficient use of the IBS. If the offered system uses lithium based chemistries TM-S9310-AQ-SAF-010 should be review and the proposal should include information addressing the TM-S9310-AQ-SAF-010 requirement and any data or past safety testing that the system has undergone.

4.1 General Requirements

4.1.1 The IBS shall be designed and constructed as specified in Appendix B figures B1 though B6 and shall be furnished as a complete, integral assembly, with no loose parts permitted. This construction design is the same as MIL-PRF-32143A (AT) Figures A-2 through A-9, also known as the NATO 6T format. **This is a Critical Performance Parameter (CPP)**

4.1.2 The IBS shall be a drop in replacement to the current 12V NATO 6T battery. This replacement should require no vehicle modifications, special tools, special mounting hardware, or specialized training to install beyond the standard 6T lead acid battery. **This is a Critical Performance Parameter (CPP)**

4.1.2.1 Typical use of the 12V NATO 6T battery is with 2 batteries in series at a 24V system. As an alternate configuration, batteries may be designed to fit this 24V, 2 batteries in series type configuration. In this 24V configuration the battery must consist of two boxes that meet the dimensional requirements stated in 4.1.1 and must be tethered together with a removable tether of at least 1.5 feet in length. This configuration will satisfy the 4.1.2 CPP.

4.1.3 The IBS (individually or in series connected pairs) shall be fully compatible with an on-vehicle charging voltage range of 25-30 volts direct current (VDC) and interface with vehicle power system (per MIL-STD-1275.). **This is a Critical Performance Parameter (CPP)**

4.1.4 The IBS shall be capable of charging to 100% capacity from a standard 12V or 24V lead acid vehicle battery charger in less than 6 hours from 0% state of charge.

4.1.5 The IBS battery shall show no damage after an impact by a 1 kilogram (kg) solid steel ball dropped from the heights indicated in Table I after four hours temperature soak listed in Table I

Table 1

Pre-test conditioning Temperature	Drop height of 1kg weight
66°C	2100 mm
-18°C	1400 mm
-40°C	700 mm

4.1.6 Post shall be sealed and shall maintain its seal under all CPP environmental conditions.

4.1.7 Terminal post shall be concentric tapered posts of design and location specified on Figure A-3 and A-6 of MIL-PRF-32143A. The positive tapered terminal shall be identified by a "+", a "POS", or a "P" and the negative terminal be a "-", a "NEG", or an "N".

4.1.8 Tapered terminal post shall withstand torque up to 28.25 Newton-meter (Nm).

4.1.9 The IBS shall be provided with a vent mechanism that prevents the battery from building up excess gas and creating a safety issue. **This is a Critical Performance Parameter (CPP)**

4.1.10 The IBS shall maintain at least 80% capacity rating after 1000 deep discharge cycles. A deep discharge cycle is defined as a discharge at 40Amps for one hour followed by 15Amp discharge to 10.5 Volts at 25°C. **This is a Critical Performance Parameter (CPP)**

4.1.11 The IBS shall be able to function at all CCP levels in temperatures between -20°C to 65°C. **This is a Critical Performance Parameter (CPP)**

4.1.12 The IBS shall be able to withstand storage temperatures between -40°C and 88°C with no degradation of any component and/or other damage.

4.1.13 The IBS shall have a calendar life of at least 5 years.

4.1.14 The IBS shall be capable of being put into series or parallel to make larger battery system. A minimum of 2 in series and/or 4 in parallel should be possible. **This is a Critical Performance Parameter (CPP)**

4.1.15 The IBS shall not have a capacity fade more that 10% over a 90 day period at 40°C. **This is a Critical Performance Parameter (CPP)**

4.1.16 The IBS shall have a shelf life of at least 30 months. Shelf life is defined as a battery stored at 100% capacity and not dropping below 20% capacity at 25°C storage temperature. **This is a Critical Performance Parameter (CPP)**

4.1.17 The IBS weight threshold is 75 lbs. If two tethered boxes are used, the combined weight shall not exceed 150 lbs, and nether box shall exceed 75 lbs. **This is a Critical Performance Parameter (CPP)**

4.1.18 The IBS weight objective is 55 lbs. If two tethered boxes are used, the combined weight shall not exceed 110 lbs, and nether box shall exceed 55 lbs

4.1.19 Flexible handles shall be proved that shows no degradation under long term exposure to all environments listed in this solicitation. These handles should be able to hold the weight of the IBS and shall not be removable form the IBS.

4.1.20 Sand and Dust Requirements: The IBS shall be able to successfully pass the Sand and Dust test per MIL-STD-810F Method 510.4.

4.1.21 Altitude: the IBS shall provide rated power up to 4,000 ft. above sea-level. The IBS shall operate up to 12,000 ft above sea-level.

4.1.22 Rain / Splash: The system shall survive heavy rain and sea-water splashes.

4.1.23 EMI: The IBS shall meet or exceed Electro-Magnetic Interference requirements per MIL-STD-461E. Specifically RE 101, RE 102, RS 101, and CE 101.

4.1.24 The IBS shall remain operable after functional shock. (Ref: Mil STD 810F 516.5 Procedure I)

4.1.25 The IBS as installed shall meet all functional requirements and show no evidence of degradation after exposure to salt fog in its operational or storage configuration. (Ref: MIL-STD-810F, Method 509.4, Procedure I).

4.1.26 A state of charge indicator for the IBS is desired.

4.1.27 Safety: The IBS shall have all the safety controls needed to prevent any safety event from occurring. No additional safeties will be provided with the vehicle. Safeties must include the ability to withstand any events due to overcharge, overdischarge, short circuit, over temperature, or other potential hazards that could be commonly seen inside a vehicle compartment where starting, lighting and ignition batteries are located. These safeties should self activate when a potential hazard could occur for the technology and should self reset when the hazard is removed. **This is a Critical Performance Parameter (CPP)**

4.1.28 The IBS when properly mounted in a vehicle, shall be capable of operation without damage over primary roads, secondary roads and cross-country terrain of the US Army Aberdeen Test Center as defined in the Table below. Appendix C gives background information about terrain duty profiles. **This is a Critical Performance Parameter (CPP)**

Surface/Test Course	Mileage	Max. Speed (MPH)	Average Speed (MPH)
Highways - paved roads (miles) (Perryman straightaway)	200 miles	60	50
Gravel roads (miles) (Munson gravel road course)	100 miles	20	10
Cross-country (unimproved) (Perryman cross- country ((secondary road "A"))	100 miles	20	10
Cross-country (unimproved) (Perryman gun mount) ((secondary road "B"))	200 miles	20	10
Belgian block (Munson Belgian block)	300 miles	20	10

Coarse Washboard (6 inch wave; 72 inches apart)	1 lap		3
Radial washboard (2 to 4-inch waves)	1 lap		3
Two-inch washboard	1 lap		3

4.1.29 Manual – Paper: Each IBS shall be delivered with an English language "User's Level Operation and Maintenance Manual" that address the use and support of the IBS. **This is a Critical Performance Parameter (CPP)**

4.1.30 Warranty: The contractor shall offer and manage a warranty program included in the unit cost of the IBS sufficient to support the operational use of the IBS. The contractor shall describe and offer their commercial warranty provisions to the extent that such provisions (e.g., design integrity, materials, workmanship, and performance) affect operational employment of the IBS. Duration and limitations of warranty, provisions for extended warranty, and other evidence of the quality of product design and customer service shall be addressed. Warranty provisions shall include procedures for initiation and execution of warranty provisions of fielded items.

4.1.31 The IBS shall have Unique Identification, Appendix A, in accordance with Mil-Std-130 applied and entered into the DOD registry.

4.1.32 IBS Test Support: Offeror shall assist in test support role, aiding USMC project engineers in failure analysis, and recommending solutions to unforeseen IBS failures.

4.2 High Energy Improved Battery System (HEIBS) Requirements

4.2.1 The HEIBS shall have a minimum capacity of 160Ahr at a C/20 rate of discharge. **This is a Critical Performance Parameter (CPP)**

4.2.2 The HEIBS shall have a minimum reserve capacity (25A discharge rate at room temperature) of 320 minutes. **Critical Performance Parameter (CPP)**

4.2.3 The HEIBS shall have a minimum 900 cold cranking amps (CCA). CCA is defined as discharge for 30sec at -18°C with the voltage not dropping below 7.2V. **This is a Critical Performance Parameter (CPP)**

4.3 High Power Improved Battery System (HPIBS) Requirements

4.3.1 The HPIBS shall have a minimum capacity of 60Ah at a C/20 discharge rate when in a 24V configuration (Two 6T configuration). This is a **Critical Performance Parameter (CPP)**

4.3.2 The HPIBS shall have a minimum reserve capacity (25A discharge rate at room temperature) of 100 minutes when in a 24V configuration (Two 6T configuration). **Critical Performance Parameter (CPP)**

Note: The HPIBS can be used in a hybrid configuration with another chemistry battery, such as a standard Hawker 12V lead acid battery. If a hybrid configuration is used all electronics and controls need to operate this battery must be included in the 6T size formats stated in 4.1.1 and no more than a two 6T configuration can be used to make the HPIBS functional.

4.3.3 The HPIBS shall have a minimum 2000 cold cranking amps (CCA). CCA is defined as discharge for 30sec at -18°C with the voltage not dropping below 7.2V. **This is a Critical Performance Parameter (CPP)**

Appendix A – Item Unique Identification (IUID)

These simplified IUID marking requirements are designed and intended to be compliant with the Department of Defense (DoD) UID requirements as specified in the Department of Defense Guide to Uniquely Identifying Items: Assuring Valuation, Accountability and Control of Government Property, Version 1.4 April 16, 2004.

What items require UID markings?

- All items and sub-systems with a unit cost of $5,000 or more
- Serially managed, mission essential, or controlled inventory items
- Components within items if determined by the Program Manager

For the purposes of this project, the container and the Refrigeration Unit are determined to be subject to requirement 1.b and must each have IUID markings.

What information is needed to create an IUID (for UII Construct #2 in the reference)?

- An enterprise ID (in this case, a manufacturer's CAGE code)
- An original part number or model number for the item
- A serial number for the particular item being marked

How is the IUID marking constructed?

- The IUID marking has two main elements:
- The human-readable listing of the enterprise ID (CAGE code), original part or model number, and serial number of the item being marked.
- A 2-dimensional machine-readable data matrix composed of the same information elements as listed above. The data matrix must be an ECC 200 symbol. The syntax for encoding the data matrix is ISO/IEC 15434, and ISO/IEC 15418 data identifiers are used to designate the three data elements.
- An example of UID marking appears below:

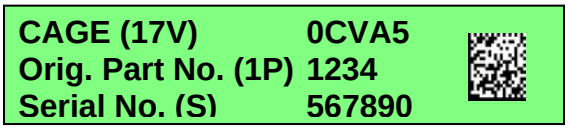

This example shows the human-readable CAGE code, Original Part Number, and Serial Number listed. The items in parenthesis after each text description are the data labels corresponding to each data element. For example, the ISO/IEC 15418 data identifier for "serial number" is "S." The marking includes an ECC 200 2-dimensional data matrix containing the same data encoded in ISO/IEC 15434 syntax. Note that for this example the ECC 200 symbol used is representational only and is not accurately encoded with the example data.

The ISO/IEC 15434 syntax is constructed as follows:

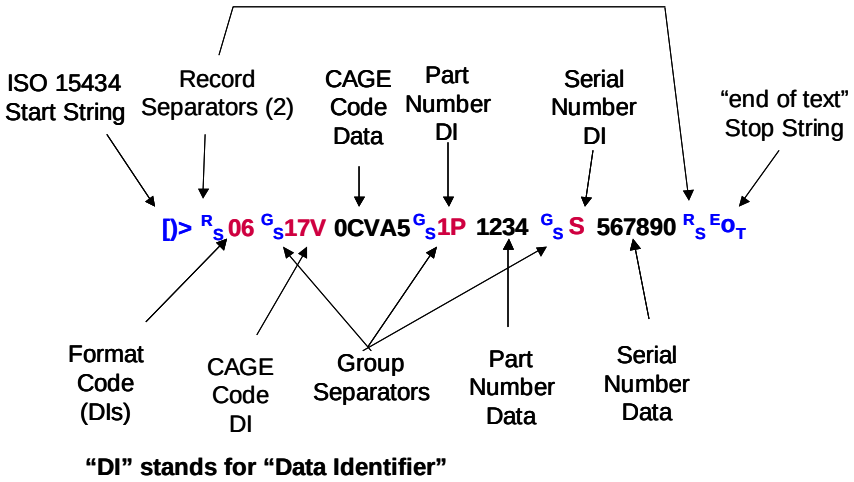

The example above shows the data elements encoded to generate the proper ECC 200 data matrix.

How are the items labeled?

- Any permanent marking conforming to the example in paragraph "How is the IUID marking constructed?" above is sufficient.
- We recommend that the IUID markings for each item be printed on self-adhesive labels that are placed on the existing data plate for the item being marked (the data plate should have a "blank" area for the label). A clear film can be placed over the label to enhance its durability. Though IUID marking information may duplicate information on the existing data plate, it is desired that the data plate information remain complete to allow item identification if the IUID marking label becomes illegible.
- An integral bar code and manual data fields on the data plate is equally acceptable
- An example appears below:

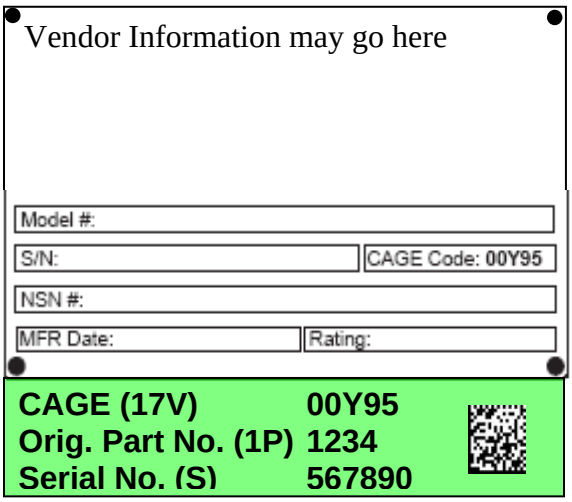

Appendix B – Drawings from Mil-Prf-32143A

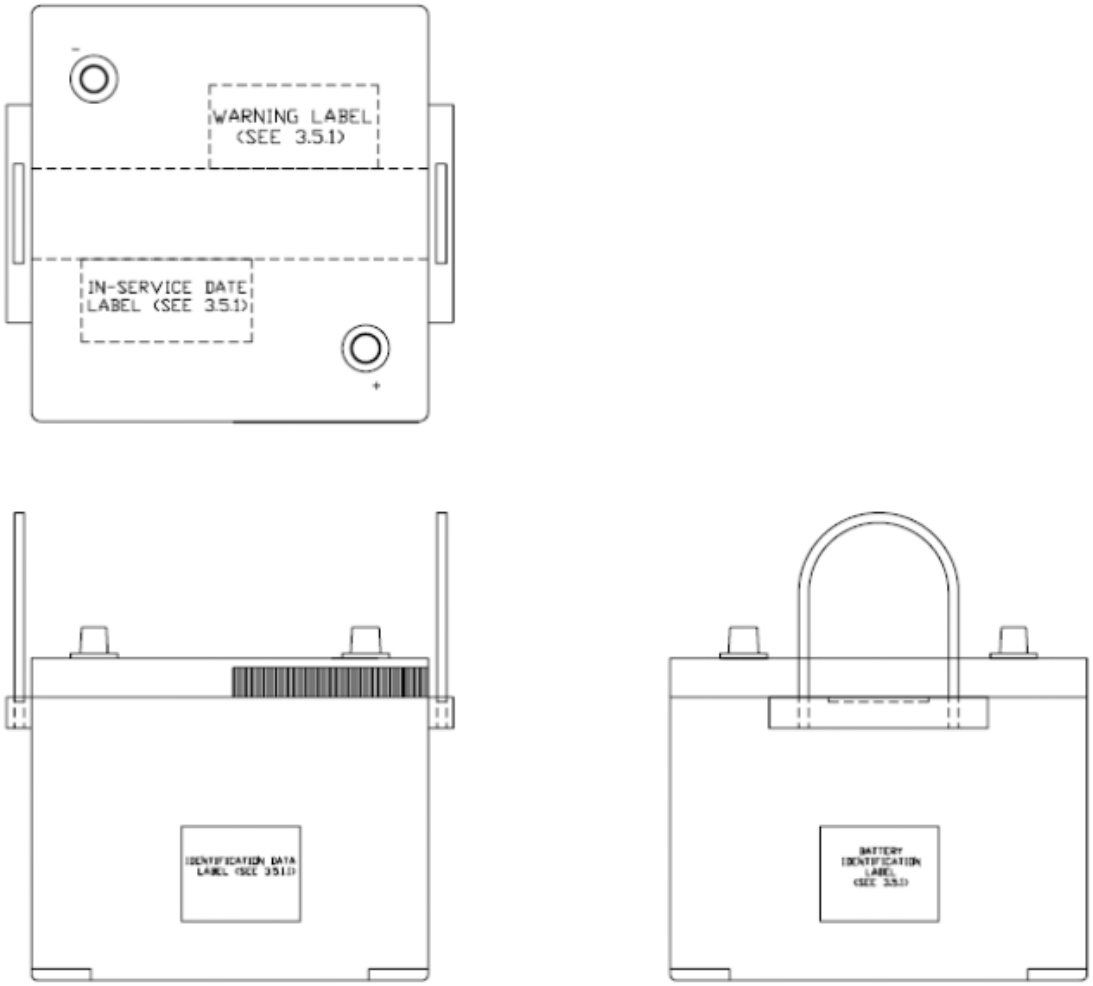

Figure B1. "Figure A-2 Battery overview" from Mil-Prf-32143A.

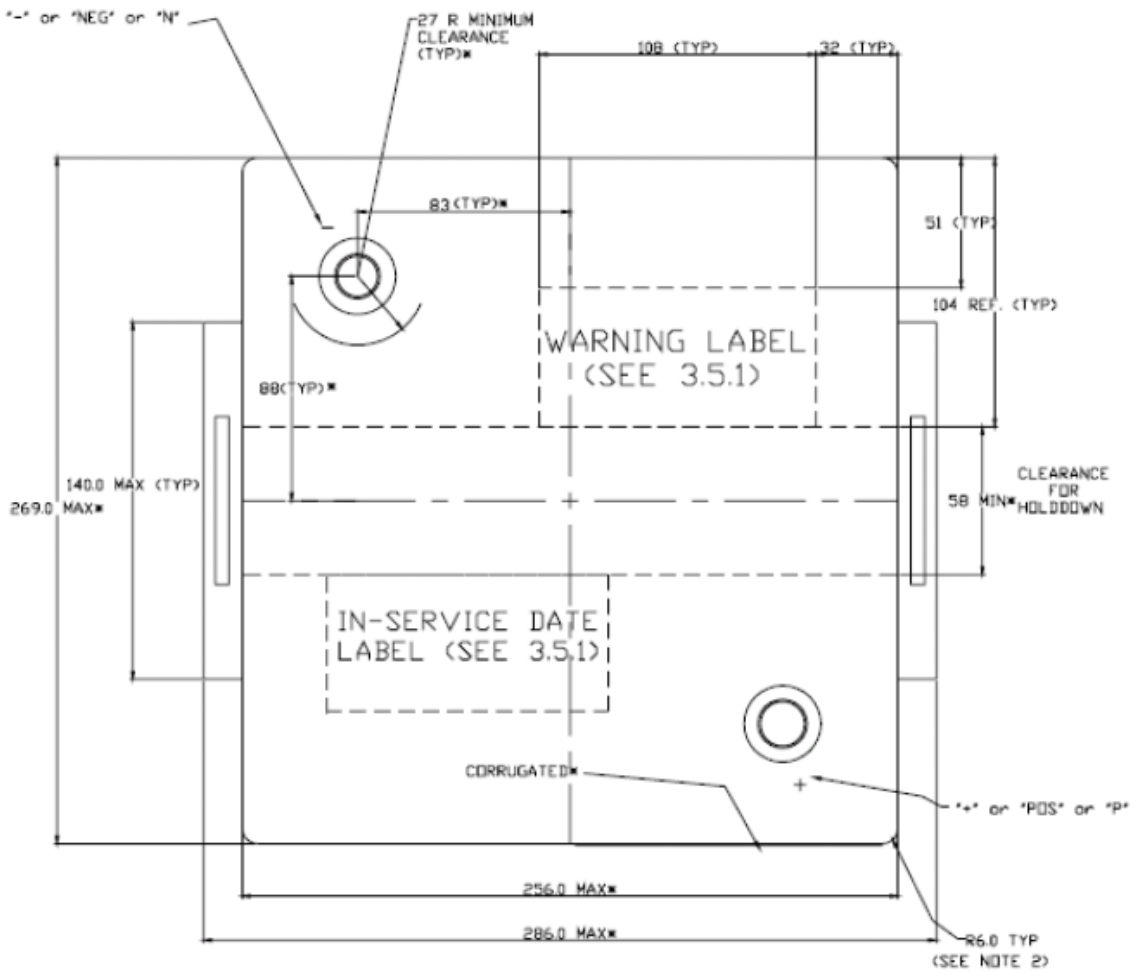

Figure B2. "Figure A-3 Top view dimensions of battery" from Mil-Prf-32143A.

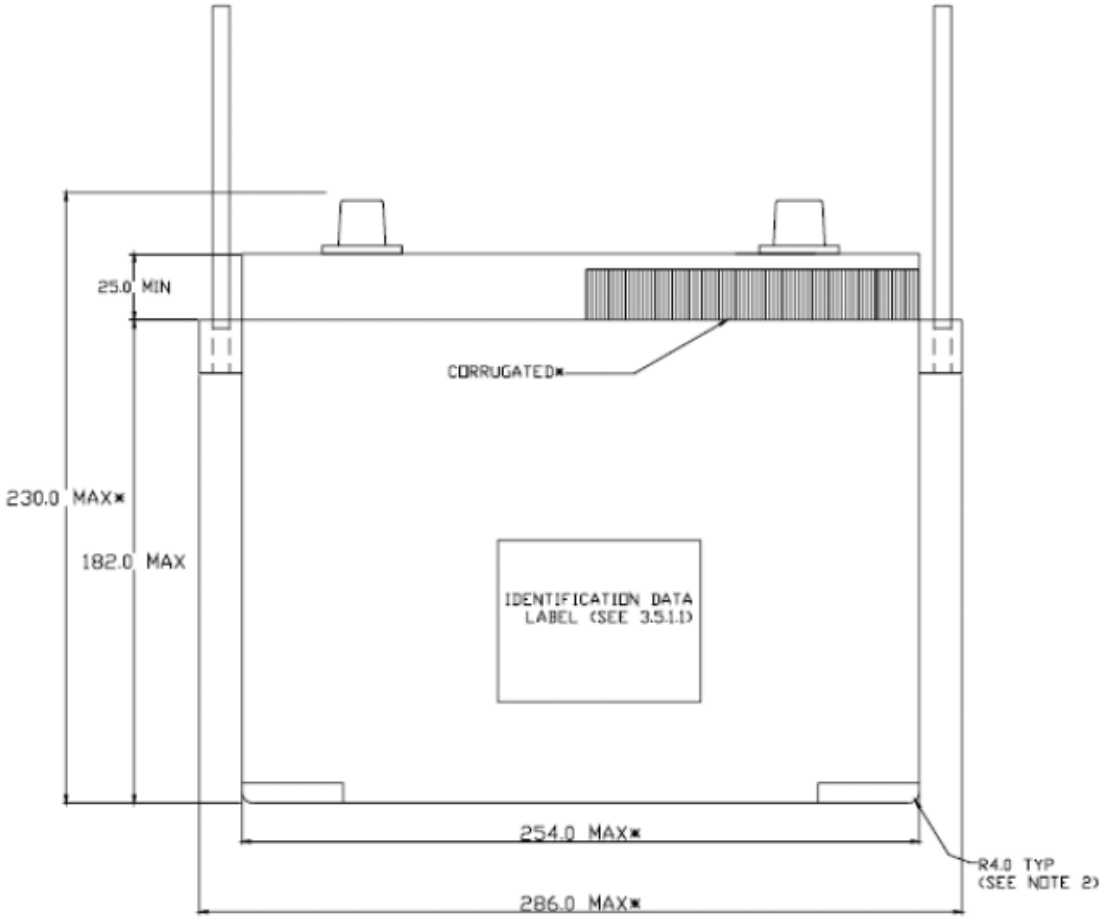

Figure B3. "Figure A-4 Front view dimensions of battery" from Mil-Prf-32143A.

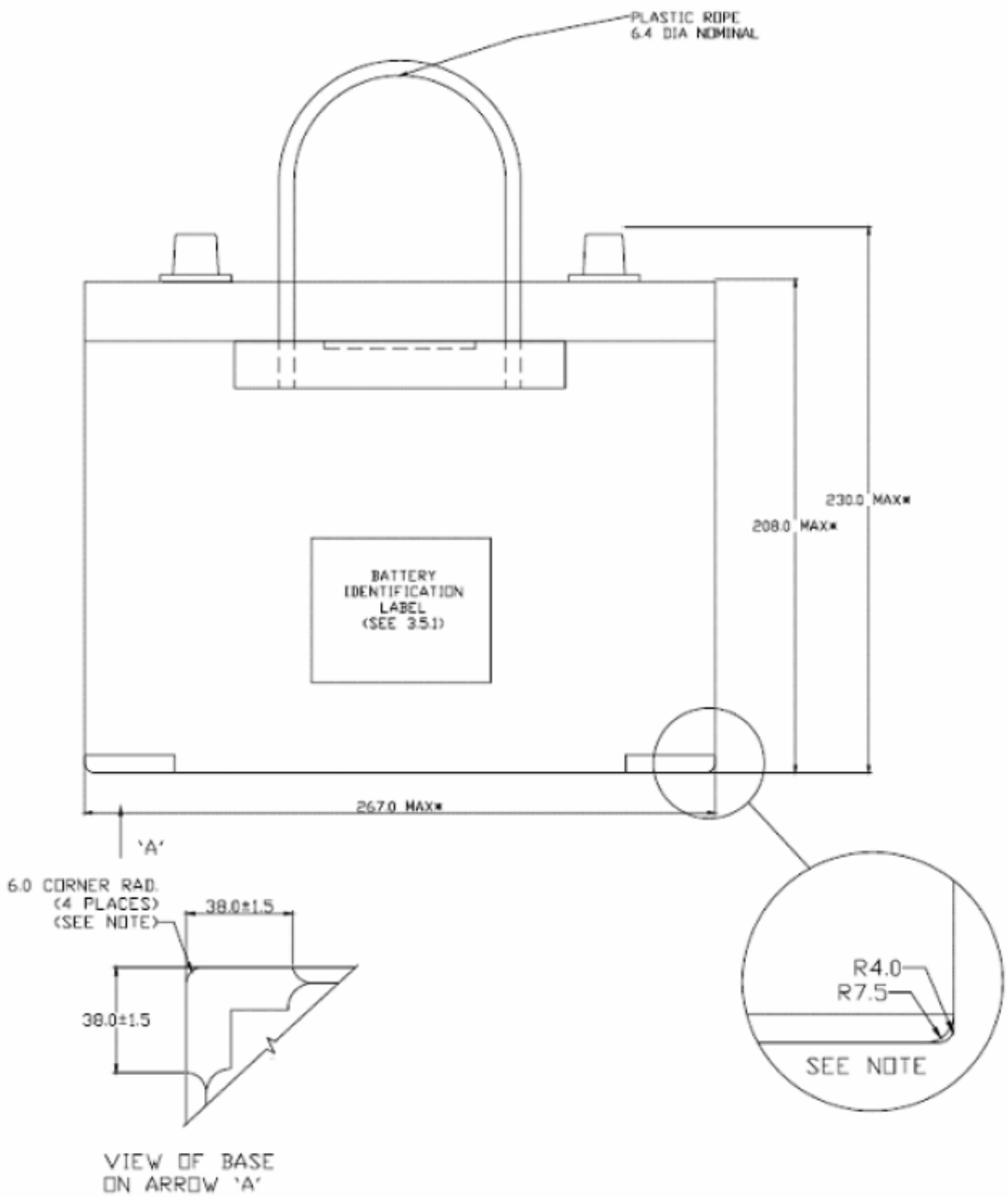

Figure B4. "Figure A-5 Side view dimensions of battery" from Mil-Prf-32143A.

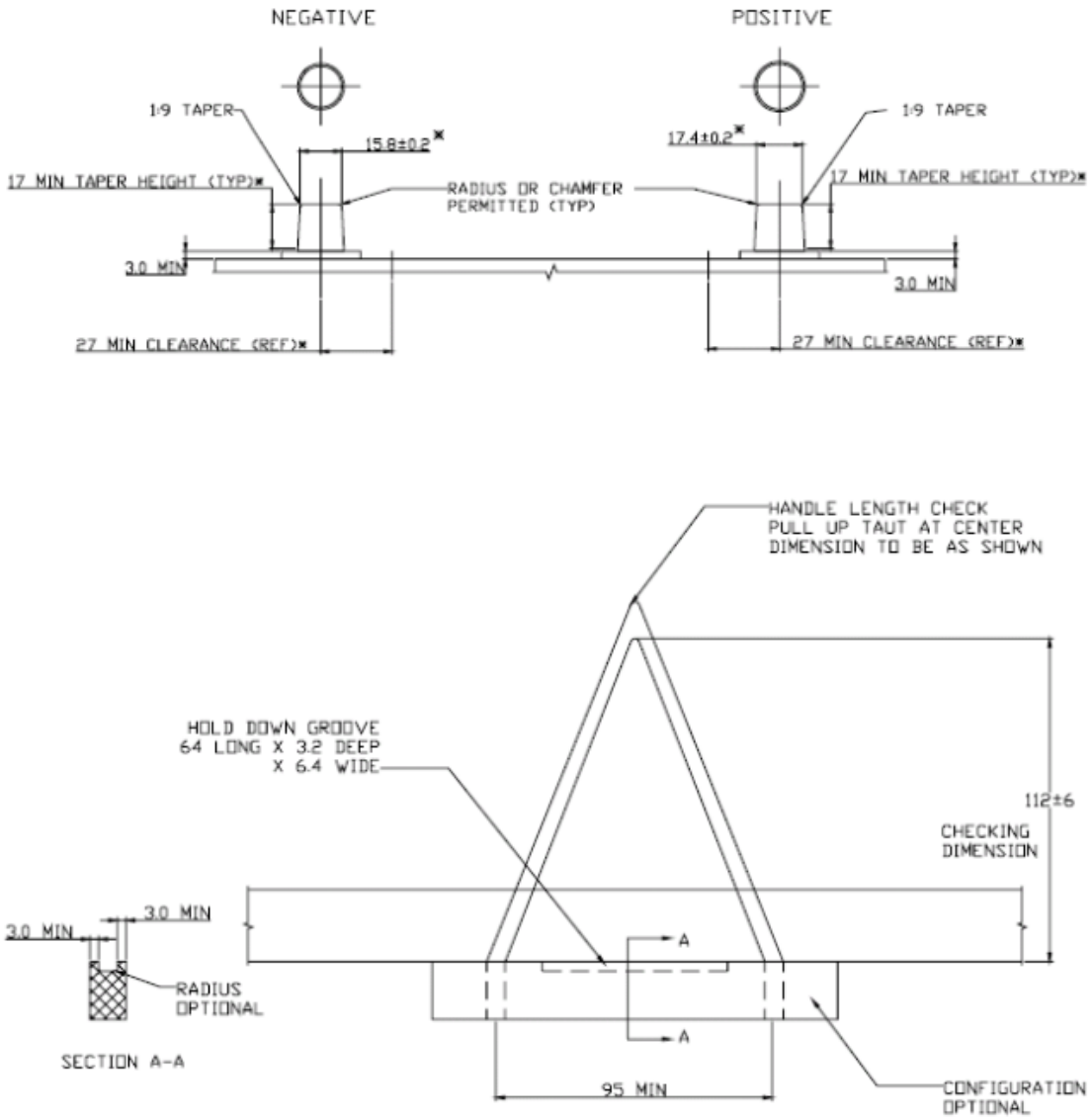

Figure B5. "Figure A-6 Handle and post details" from Mil-Prf-32143A.

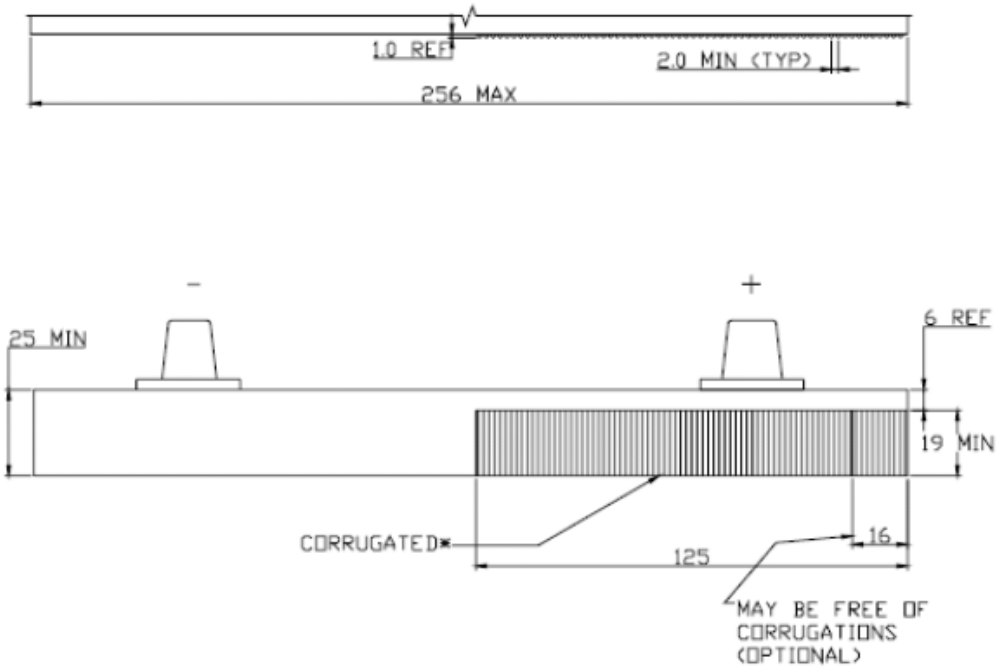

Figure B6. "Figure A-7 Corrugations by positive post" from Mil-Prf-32143A.

Appendix C - Terrain Duty Profile

Purpose: This information is provided to allow offerors to know and understand the level and severity of terrains as applicable for vehicle mobility.

Duty Profile. USMC vehicles will normally be expected to traverse surfaces approximately along the following profile: 10% is completed on Primary Roads, 20% on Secondary, 30% on Trails, and 40% Cross Country. The Government has defined duty profile mission cycle percentages and Root Mean Square (RMS) values for surface roughness. The wave number spectrum formulas are based on the following Example Formula:

$Gxx(n) = 1.4 \times 10^{-8}(n)^{-2.5}$
Wave Number Spectrum: Gxx(n) = spectral of the road elevation in ft2/cycle/ft
n = wave number in cycle / ft
1.4×10^{-8}= roughness coefficient (amplitude of spectrum at 1 cycle/ft)
-2.5 = slope of the wave number spectrum

(1) **Primary Roads.** There are three types of primary roads, high quality paved, secondary pavement, and rough pavement. All may consist of two or more lanes, all weather, maintained, hard surface (paved) roads with good driving visibility used for heavy and high density traffic. These roads have lanes with a minimum width of 108 inches, road crown to 2 degrees and the legal maximum Gross Vehicle Weight (GVW) for the county and state is assured for all bridges.

(a) High quality paved roads have surfaces having an average RMS value of 0.1 inches.

(b) Secondary pavement has an average RMS of 0.2 inches and can include significantly degraded concrete, macadam concrete or asphalt pavements (potholes, alligator cracking, freeze/thaw breakup)

(c) Rough pavement consists of two lane roads with degraded shoulders, and marginal subgrades which produce long wavelength swells and additional degradation of the surface. Rough pavements have a average RMS of .3 inches RMS.

(d) The wave number spectrum equation, percentages of total travel, and average travel speed for the three levels of pavement roughness are as follows:

Surface	Wave Number Spectrum	% of Total Miles	Average Speed (mph/kph)
High Quality Paved Road	$Gxx(n) = 1.4 \times 10^{-8}(n)^{-2.5}$	3%	55/88
Secondary Pavement (Two Lane Paved Road)	$Gxx(n) = 1.9 \times 10^{-7}(n)^{-2.5}$	3%	50/80

Rough Pavement (Degraded Paved Road)	$Gxx(n) = 8.0 \times 10^{-7}(n)^{-2.5}$	4%	42/72

(2) **Secondary Roads.** There are three types of secondary roads; loose surface, loose surface with washboard and potholes, and Belgian block. These roads are one or more lanes, all weather, occasionally maintained, varying surface (e.g., large rock, crushed rock, gravel) intended for medium-weight, low-density traffic. These roads have no guarantee that the legal maximum GVW/ Gross Combined Vehicle Weight (GCW) for the county and state is assured for all bridges. These roads are surfaces having a RMS value varying between 0.3 inches - 1.0 inches.

(a) The wave number spectrum equation, percentages of total travel, and average travel speed for the three levels of pavement roughness are as follows:

Surface Spectrum	**Wave Number**	**% of Total Miles**	**Average Speed (mph/kph)**
Loose Surface	$Gxx(n) = 3.0 \times 10^{-5}(n)^{-2.0}$	8%	30/48
Loose Surface with Washboard and Potholes	$Gxx(n) = 4.0 \times 10^{-6}(n)^{-2.4}$	10%	30/48
Belgian Block	$Gxx(n) = 4.0 \times 10^{-4}(n)^{-1.4}$	2%	20/32

(b) Loose surface with washboard roads have a peak amplitude of 5.0 x 10-3 ft2/cycle/ft at 0.3 to 0.5 cycle ft (2 to 3 foot wavelengths). Loose surface roads with a high density of potholes have a peak amplitude of 9.0 x 10-3 ft2/cycle/ft at 0.1 to 0.2 cycle/ft (5 to 10 foot wavelengths). Generally, washboard occurs in operational areas that are dry, whereas pothole gravel roads occur in wet operational areas.

(c) Belgian Block secondary roads have a peak amplitude of 8.0 x 10-2 ft2/cycle/ft at 0.83 cycle/ft (12 foot wavelengths) and these wavelengths are 180o out-of-phase left to right which produces a racking input to the vehicle. The amplitude of the wavelengths at 1 cycle/ft are dominated by the cobblestone blocks.

(3) **Trails.** One lane, unimproved, seldom maintained loose surface roads, intended for low density traffic. Trails have no defined road width and can include large obstacles (boulder, logs, stumps) and no bridging. These are surfaces having an RMS value varying between 1.0 inches - 3.4 inches. The wave-number spectrum equation for the trails roughness is as follows:

Surface	**Wave Number Spectrum**	**% of Total Miles**	**Average Speed (mph/kph)**
Trails	$Gxx(n) = 4.6 \times 10^{-4}(n)^{-1.9}$	30%	20/32

(4) Cross-country Terrain. Vehicle operations over terrain not subject to repeated traffic. No roads, routes, well-worn trails, or man-made improvements exist. (This definition does not apply to vehicle test courses used to simulate cross-country terrain.) These are surfaces having an RMS value varying between 1.5 inches - 4.8 inches. The wave-number spectrum equation for the cross country roughness is as follows:

Surface Spectrum	Wave Number	% of Total Miles	Average Speed (mph/kph)
Cross-Country	$Gxx(n) = 9.2 \times 10^{-4}(n)^{-2.1}$	40%	15/24

(5) **Road Left and Right Track Correlation.** Fixed frequency, RMS, and half-round obstacles shall include roughness or events where the left and right wheel paths are shifted longitudinally up to +/- 45 degrees (approximately 6 1/2 ft (2m)).

Roughness Tolerances. The random roughness expressed through the straight line wave number spectrum relationships are average values and actual road roughness will naturally contain variability. The upper and lower limits for the random portion of the road roughness have a +/- 3 decibel envelope.