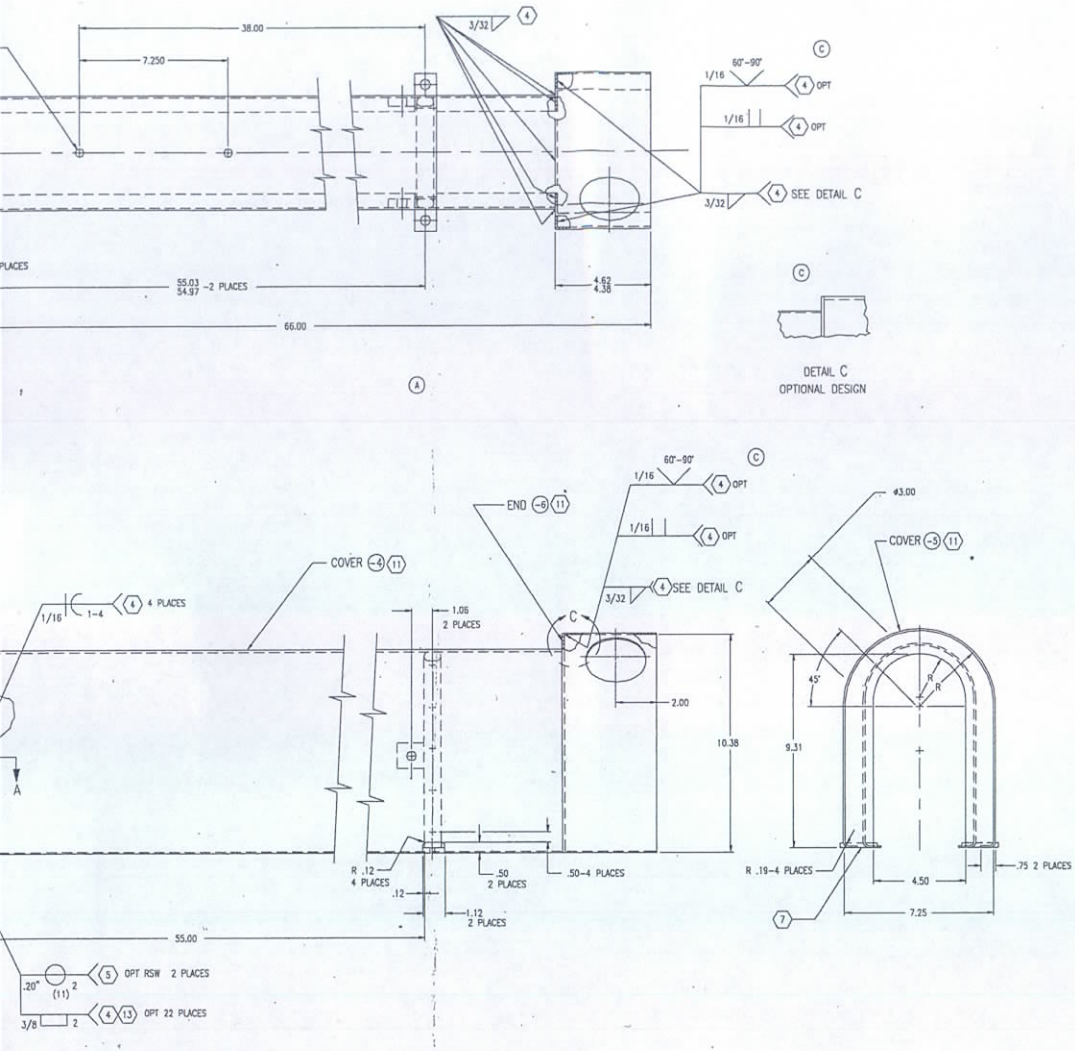

SEE SEPARATE PARTS LIST

CAD MAINTAINED. MANUAL CHANGES NOT PERMITTED.

2624813	AAVR7A1
2618010	AAVC7A1
2600110	AAVP7A1
NEXT ASSY	USED ON
APPLICATION	

UNLESS OTHERWISE SPECIFIED DIMENSIONS ARE IN INCHES
TOLERANCES ON
FRACTIONS ± — DECIMALS .X ± — .XX ± .06 .XXX ± —
ANGLES ± 5°

MATERIAL 3 11

MATL ENGR RAS 69-07-24 | INSP ENGR PLM

CONTRACT NUMBER N00024-69-C-0227
FMC CORPORATION
ORDNANCE ENGRG. DIV.
SAN JOSE, CALIFORNIA

DRAWN BY BKW | DATE OF DRAWING 69-05-28
CHECKED BY XXXX | ENGINEER FS STEVENS
APPROVED PROJECT ENGINEER BLOSELIKA
APPROVED XXXX

NAVAL SHIP SYSTEMS COMMAND
DEPT. OF THE NAVY

GUARD, DRIVE SHAFT

SIZE K | CODE IDENT NO. 80064 | DRAWING NO. 2619422
SCALE 1/2 | UNIT WT LB | SHEET 1 OF 1

2619422 | REV H | SH –

09139-06

NOTES:

1. INTERPRET DRAWING IN ACCORDANCE WITH STANDARDS PRESCRIBED BY MIL-STD-100
2. ALL WELD SIZES ARE MINIMUM
3. ALUMINUM, 5083, TEMPER OPTIONAL, SPEC QQ-A-200/4 OR ALUMINUM, 5086, TEMPER OPTIONAL, SPEC QQ-A-200/5,
   .250 THICK FOR -2
   .375 THICK FOR -3
4. WELD IN ACCORDANCE WITH CLASS B, SPEC-MIL-45205, USE ELECTRODE 5356, SPEC MIL-E-16053, FOR GMAW PROCESS OR USE ROD CLASS 5356, SPEC QQ-R-566 FOR GTAW PROCESS.
5. WELD IN ACCORDANCE WITH MIL-W-45210
6. BREAK SHARP EDGES
7. APPLY PER MIL-STD-130: 80064-2619422
8. MAKE FROM EXTRUDED SHAPE 19207-8763310 (9)
9. CODE IDENT 19207
   ARMY TANK-AUTOMOTIVE CENTER
   WARREN, MICH.
10. FINISH PER CLASS A, TYPE 4, PER DWG 2584542
11. ALUMINUM, 5083, TEMPER OPTIONAL, SPEC QQ-A-250/6, EXCEPT 24,000 PSI MIN YS AND 40,000 PSI MIN TS OR

    ALUMINUM, 5086, TEMPER OPTIONAL, SPEC QQ-A-250/7,
    .063 THICK FOR -4 AND -5
    .090 THICK FOR -6
    .250 THICK FOR -2
    .375 THICK FOR -3
12.
13. REMOVE WELD REINFORCEMENT TO .03 MAX PROTRUSION OR RECESS

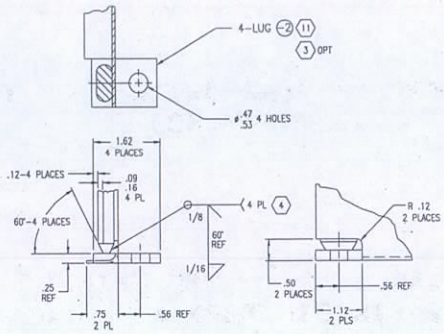

DETAIL B
SCALE 1/1

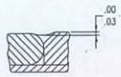

DETAIL F
SCALE 2/1

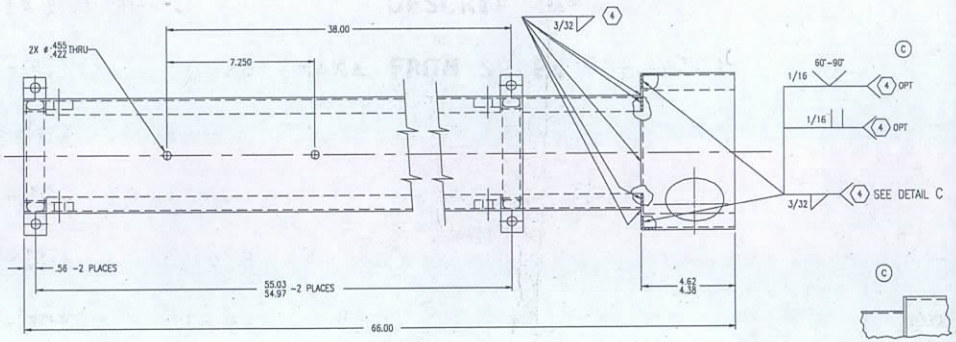

DETAIL C
OPTIONAL DESIGN

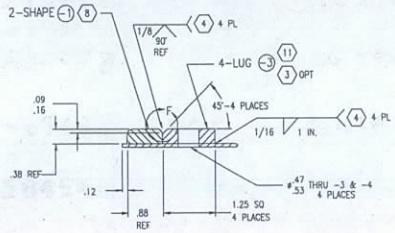
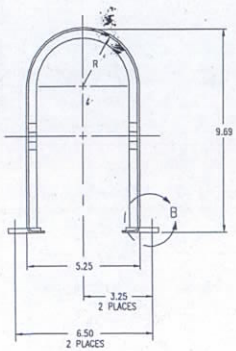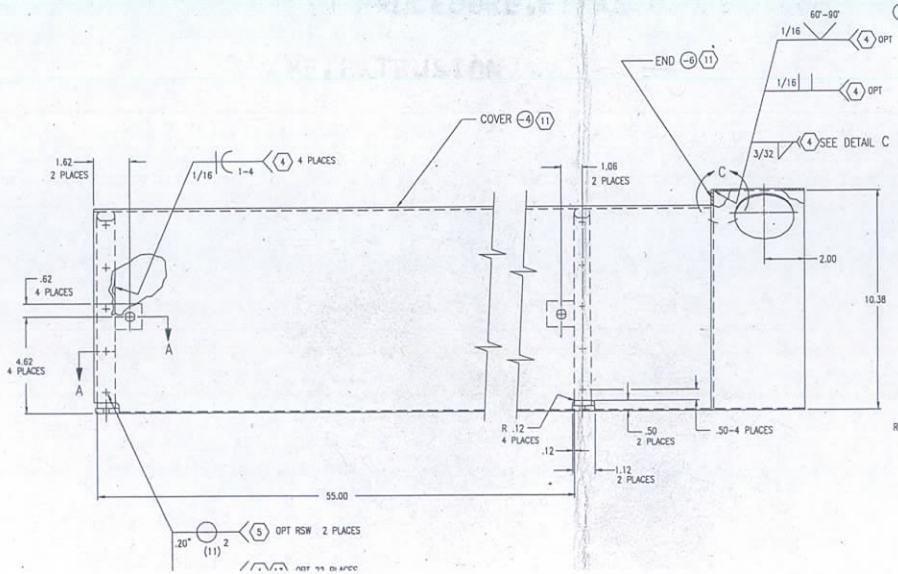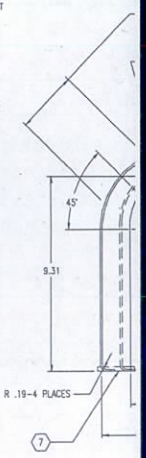
SECTION A-A
SCALE 1/1