DEPARTMENT OF THE NAVY
NAVAL FACILITIES ENGINEERING COMMAND - MID ATLANTIC

FENCE IDIQ CONTRACT DRAWINGS

AT

NAVAL WEAPONS STATION EARLE
COLTS NECK, NEW JERSEY

CONTRACT No.: N6472-08-D-2025

LOCATION MAP

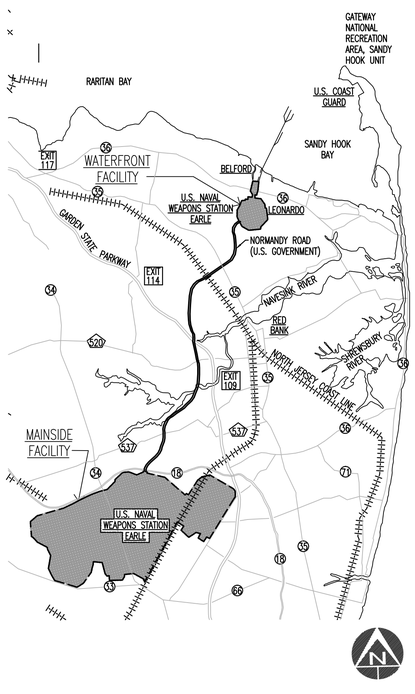

VICINITY MAP

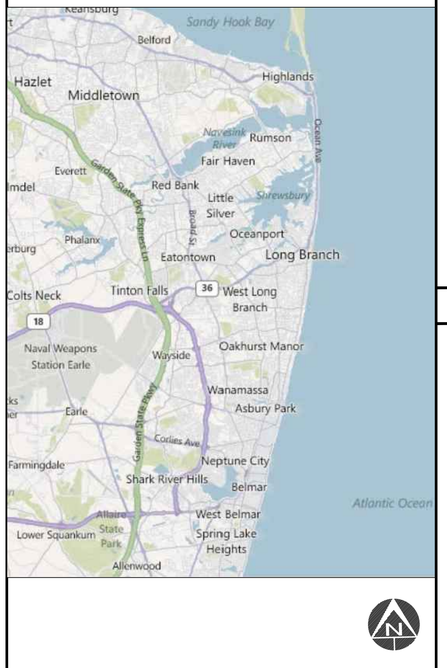

ABBREVIATIONS

ALUM	ALUMINUM	MFR	MANUFACTURER
B/W	BETWEEN	MPH	MILES PER HOUR
CL or C	CENTERLINE	OC	ON CENTER
CMU	CONC MASONRY UNIT	PSF	POUNDS PER SQ FT
CONC	CONCRETE	PSI	POUNDS PER SQ IN
DEPT	DEPARTMENT	REINF	REINFORCING,-MENT
ø or DIA	DIAMETER	REQ'D	REQUIRED
DIM	DIMENSION	SCHED	SCHEDULE
DWGS	DRAWINGS	SHT	SHEET
ELEV	ELEVATION	SPEC	SPECIFICATION
EXIST	EXISTING	SQ	SQUARE
FED	FEDERAL	T&B	TOP & BOTTOM
GALV	GALVANIZED	TYP	TYPICAL
KIP	1000 POUNDS	VERT	VERTICAL
KSI	KIPS PER SQ INCH	UON	UNLESS OTHERWISE NOTED
KTR	CONTRACTOR		
LB	POUNDS	W/	WITH
LONG	LONGITUDINAL	W/O	WITHOUT
MAX	MAXIMUM		
MIN	MINIMUM		

SYMBOLS LEGEND

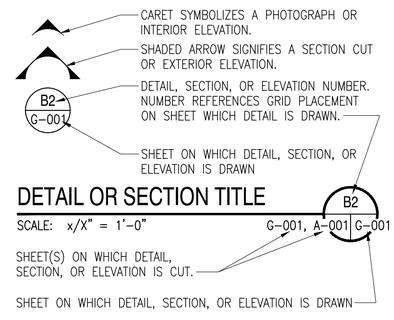

GENERAL NOTES

1. WHERE EXISTING STRUCTURES TO REMAIN ARE DAMAGED DUE TO NEW CONSTRUCTION OR DEMOLITION REQUIRED BY THESE DOCUMENTS, THE CONTRACTOR SHALL REPAIR THE DAMAGED ITEM(S) WITH NEW MATERIALS TO MATCH THE ADJACENT MATERIAL, TEXTURE, AND COLOR.
2. THE CONTRACTOR SHALL FIELD VERIFY EXISTING DIMENSIONS GIVEN, PRIOR TO ORDERING MATERIALS OR BEGINNING DEMOLITION.
3. THE CONTRACTOR SHALL OBSERVE AND MAINTAIN BUILDING AND COMPOUND SECURITY REQUIREMENTS AS DIRECTED BY THE CONTRACTING OFFICER.
4. NEW WORK WILL BE ACCOMPLISHED IN AND AROUND AREAS WHICH WILL REMAIN OPERATIONAL. ACCORDINGLY, MEASURES SHALL BE TAKEN TO AVOID INTERFERENCE WITH THE OPERATIONAL WORK ROUTINE.
5. THESE DRAWINGS ARE FOR THE CONSTRUCTION OF NEW FENCES AND GATES, THEIR REINFORCEMENT AND REINFORCEMENT OF EXISTING AS APPLICABLE. CONTRACTOR SHALL USE CABLE REINFORCING DETAILS AS REQUIRED WHERE PROJECTS CALL FOR THE REINFORCEMENT OF EXISTING FENCE LINES AND GATES.
6. THE CONTRACTOR LAYDOWN AREA IDENTIFIED ON THIS SHEET SHALL BE COORDINATED WITH THE ACTIVITY BY THE CONTRACTING OFFICER PRIOR TO THE PRECONSTRUCTION MEETING. THE ALLOWABLE AREA SIZE SHALL BE ESTABLISHED BY THE CONTRACTING OFFICER.
7. ALL SUBMITTALS REQUIRED BY THESE PLANS OR SPECIFICATIONS SHALL BE SUBMITTED TO THE CONTRACTING OFFICER FOR APPROVAL PRIOR TO COMMENCEMENT OF RELATED WORK.
8. PRIOR TO ANY EXCAVATION, CONTRACTOR SHALL CONTACT NAVFAC MIDLANT UTILITIES AND NEW JERSEY ONE CALL TO HAVE THE EXISTING UNDERGROUND LINES MARKED ON THE ASPHALT AND GRASS IN THE AREAS OF CONSTRUCTION. THE CONTRACTOR SHALL REMOVE & DISPOSE OF OFF GOVERNMENT PROPERTY, ALL SOIL FROM FOOTING EXCAVATIONS.
9. THE CONTRACTOR SHALL COMPLY WITH THE PROVISIONS OF THE "UNDERGROUND FACILITY PREVENTION ACT" (N.J.S.A. 48:2-73 ET. SEQ.).
10. CONTRACTOR SHALL SUBMIT TO THE CONTRACTING OFFICER INFORMATION / FACT SHEETS ON NEW MATERIALS TO BE USED THAT CONTAIN RECYCLED / RECOVERED CONTENT.
11. PRIOR TO REMOVALS, EXISTING PERIMETER / RESTRICTED AREA SIGNAGE SHALL BE REMOVED FROM THE EXISTING FENCING AND GATES, AND REINSTALLED ON THE NEW FENCE AND GATE CONSTRUCTION. LOCATIONS AS DIRECTED BY THE CONTRACTING OFFICER.

LIST OF SHEETS

SHEET NO.	NAVFAC DWG. NO.	SHEET TITLE
GENERAL		
1	G-001	12610882	COVER SHEET
CHAIN LINK FENCING		
2	A-501	12610883	CHAIN LINK FENCE & GATE - STANDARD DETAILS
3	A-502	12610884	CHAIN LINK FENCE - CANTILEVER GATE DETAILS
4	A-503	12610885	CHAIN LINK FENCE - CABLE REINFORCING DETAILS AT END POST
5	A-504	12610886	CHAIN LINK FENCE - CABLE REINFORCING DETAILS AT DEADMAN & LINE POST
6	A-505	12610887	CHAIN LINK FENCE - CABLE REINFORCING DETAILS AT GATES
ORNAMENTAL & ATFP FENCING		
7	A-511	12610888	ORNAMENTAL FENCE & GATE - STANDARD DETAILS
8	A-512	12610889	ORNAMENTAL FENCE - CANTILEVER GATE DETAILS
9	A-513	12610890	ORNAMENTAL FENCE - CABLE REINFORCING DETAILS AT END POST
10	A-514	12610891	ORNAMENTAL FENCE - CABLE REINFORCING DETAILS AT DEADMAN & LINE POST
11	A-515	12610892	ORNAMENTAL FENCE - CABLE REINFORCING DETAILS AT GATE
MISCELLANEOUS FENCING		
12	A-521	12610893	MISCELLANEOUS FENCE AND GATE DETAILS
13	A-522	12610894	CABLE REINFORCING DETAILS
14	A-523	12610895	CABLE REINFORCING DETAILS
15	A-524	12610896	CABLE REINFORCING DETAILS

SYM	DESCRIPTION	DATE	APPR

SEAL

DCS INFRASTRUCTURE, LLC
DESIGN & CONSTRUCTION SERVICES
309 FELLOWSHIP ROAD
MT. LAUREL, N.J. 08054 609-351-1484
3249 ROUTE 112
BLDG. A, STE. 1B
MEDFORD, N.Y. 11763 631-320-1706
A/E INFO

APPROVED

FOR COMMANDER NAVFAC

ACTIVITY

FINAL SUBMISSION

SATISFACTORY TO DATE 1/11/2012

DES	DRW	CHK
<<PM/DM>>		–
BRANCH MANAGER		–
CHIEF ENG/ARCH		–
<<XXX>>		–

DEPARTMENT OF THE NAVY
NAVAL FACILITIES ENGINEERING COMMAND
NAVAL WEAPONS STATION EARLE
NAVAL FACILITIES ENGINEERING COMMAND - MID ATLANTIC
COLTS NECK, NEW JERSEY

FENCE IDIQ CONTRACT

COVER SHEET

SCALE: AS NOTED

EPROJECT NO.: –

CONSTR. CONTR. NO. N6472-08-D-2025

NAVFAC DRAWING NO. 12610882

SHEET 1 OF 15

G-001

DRAWFORM REVISION: 10 MARCH 2009

FILE NAME: P:\Temp\AcPublish_4312\N6472080202S-G-CS.001 rev1.dwg LAYOUT NAME: Layout1 PLOTTED: Wednesday, January 11, 2012 - 3:25pm USER: Christian Rojas

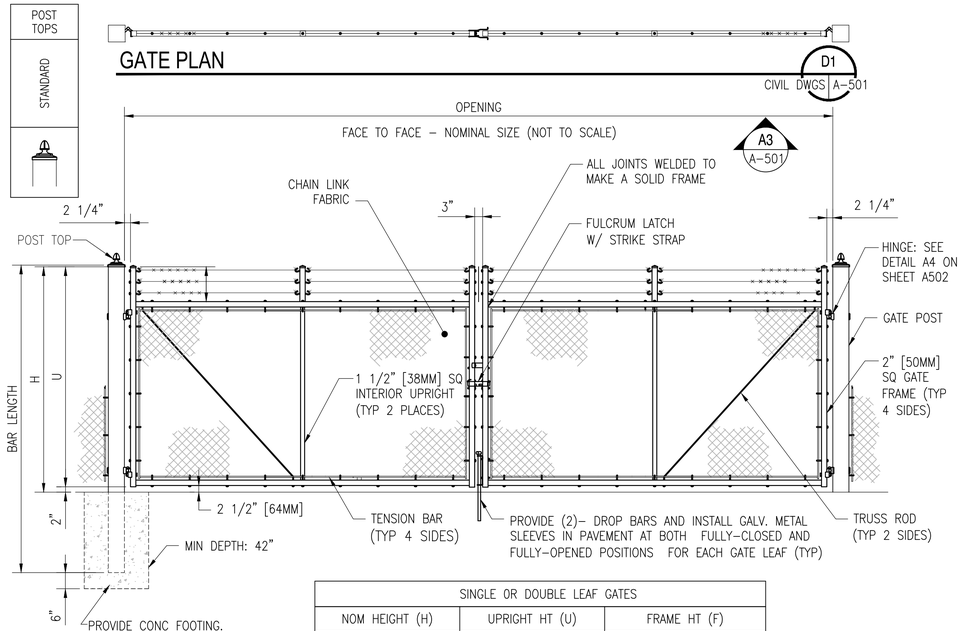

GATE PLAN D1 CIVIL DWGS A-501

SINGLE OR DOUBLE LEAF GATES		
NOM HEIGHT (H)	UPRIGHT HT (U)	FRAME HT (F)
NOM HT INCLUDING BARBED WIRE	ACTUAL DIM	ACTUAL DIM
8'–0" [2438MM]	7'–10" [2388MM]	6'–8 1/2" [2045MM]

TYPICAL SWING GATE ELEVATIONS- DOUBLE W/ (4) BAYS & SINGLE SHOWN WITH ROUND POSTS & WITH BARBED WIRE B1 A-501 A-501

NOT TO SCALE

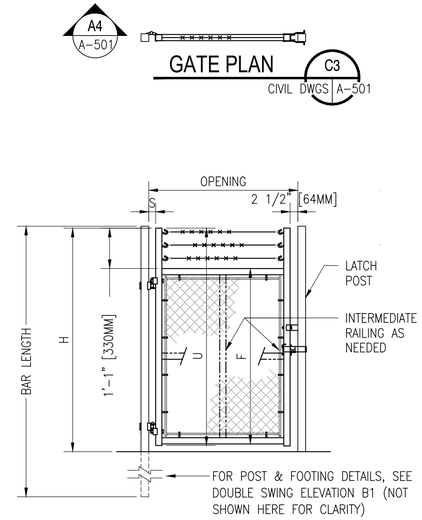

GATE PLAN C3 CIVIL DWGS A-501

SINGLE GATE ELEVATION B3 A-501 A-501

NOT TO SCALE

CHAIN LINK FENCING NOTES

1. FABRIC: THE STANDARD FENCE FABRIC SHALL BE VINYL, ZINC OR ALUMINUM–COATED STEEL WIRE CHAIN LINK WITH MESH OPENINGS NOT LARGER THAN TWO INCHES PER SIDE AND A TWISTED AND BARBED SELVAGE AT TOP AND BOTTOM IN ACCORDANCE WITH THE SPECIFICATIONS. UTILIZE 6–GAUGE FOR BASE PERIMETER OR HEIGHTENED SECURITY ZONES AND 9–GAUGE FOR BASE INTERIOR OR WHEN JOINING AN EXISTING FENCE WHICH IS ALREADY 9–GAUGE.
2. FABRIC TIES: ONLY 12–GAUGE STEEL TIES SHALL BE USED. COATING OR PLATING WILL BE ELECTROLYTICALLY COMPATIBLE WITH THE FENCE FABRIC TO INHIBIT CORROSION.
3. REINFORCEMENT: TENSION WIRES SHALL BE INSTALLED AND INTERWOVEN (OR AFFIXED WITH FABRIC TIES) ALONG THE TOP & BOTTOM OF THE FENCE FOR STABILIZATION OF THE FENCE FABRIC.
4. FENCE HEIGHT: CHAIN LINK FABRIC SHALL BE 7' HIGH WITH AN ADDITIONAL 1' IN HEIGHT COMPOSED OF 3 STRANDS OF BARBED WIRE. THE TOTAL FENCE HEIGHT SHALL BE 8'.
5. GROUND CLEARANCE: BOTTOM OF THE FENCE FABRIC SHALL BE WITHIN TWO INCHES OF FIRM SOIL.
6. TOP GUARDS: A TOP GUARD IS AN OVERHANG OF BARBED WIRED ALONG THE TOP OF A FENCE, FACING OUTWARD (AWAY FROM PROTECTED SITE) AND UPWARD AT APPROX. 45 ANGLE. TOP GUARD SUPPORTING ARMS WILL BE PERMANENTLY AFFIXED TO THE TOP OF FENCE POSTS TO INCREASE THE OVERALL HEIGHT OF THE FENCE AT LEAST 1 FOOT. THREE STRANDS OF 12–GAUGE BARBED WIRE, EQUALLY SPACED, SHALL BE INSTALLED ON THE SUPPORTING ARMS.
7. FENCE POSTS: SHALL BE ASTM F1043 OR F1083 ROUND PIPE OR SQUARE TUBE AND SHALL BE GALVANIZED IN ACCORDANCE WITH THE SPECIFICATIONS. FENCE POST SPACING AND SIZE (DIAMETER) SHALL BE DETERMINED IN ACCORDANCE WITH CHAIN LINK FENCE MANUFACTURERS' INSTITUTE (WLG 2445). SPACING SHALL NOT EXCEED 10'–0" OC. SIZE (DIAMETER) SHALL NOT BE LESS THAN THAT SPECIFIED.
8. GATE POSTS & FOUNDATIONS: GATE POST SIZE AND ASSOCIATED FOOTING DIAMETER TO BE DETERMINED BY MANUFACTURER, BASED ON LEAF WEIGHT & DIMENSION, BUT NOT LESS THAN DIAMETER SHOWN ON THESE DRAWINGS. MINIMUM FOOTING DIAMETERS (TO BE FILLED W/4000 PSI CONC): 40" ø FOR 8" POST; 36" ø FOR 6" POST; 24" ø FOR 4" POST; OTHER SIZES TO BE DESIGNED BY MFR OR KTR. NO FOOTING WIDTH SHALL BE LESS THAN 4(X) THE POST WIDTH.
9. SEE DETAILS A4 AND B4, SHEET 502 FOR ADDITIONAL FENCE DETAILS.

SINGLE LEAF GATES		
OPENING	GATE POSTS	HINGE SPACE (S)
FACE TO FACE	SQUARE & ROUND SIZES	POST TO UPRIGHT
3'–0" [914MM] THROUGH 6'–0" [1829MM]	2.5"[63.5MM]SQ x 3/16"TH OR 2.875" [73MM] OD	FOR SQUARE & ROUND GATE POSTS: 2 1/4" [57MM]
6'–0" [1829MM] THROUGH 12'–0" [3657MM]	4" [102MM] SQ x 3/16"TH OR 4" [102MM] OD	FOR SQUARE & ROUND GATE POSTS: 2 1/4" [57MM]
12'–0" [3657MM] THROUGH 19'–0" [5790MM]	6" [153MM] SQ x 3/16"TH OR 6.625" [168MM] OD	FOR SQUARE & ROUND GATE POSTS: 2 1/4" [57MM]
19'–0" [5790MM] THROUGH 23'–0" [7010MM]	8" [203MM] SQ x 1/4"TH OR 8.625" [219MM] OD	FOR SQUARE & ROUND GATE POSTS: 2 1/4" [57MM]

T & B SELVAGE

TWIST

NOTE (1): A BOTTOM RAIL CAN BE ADDED FOR SECURITY, IT SHALL BE INSTALLED APPROX 3" ABOVE GRADE (A MINIMUM OF 2" AND A MAXIMUM OF 4"). HARDWARE SHALL BE WELDED OR SHOT NAILED TO POSTS AND RAILS IN ORDER TO SECURE IN PLACE. ATTACH FABRIC TO NEW BOTTOM RAIL TO ELIMINATE POSSIBILITY OF PEELING UP FABRIC.

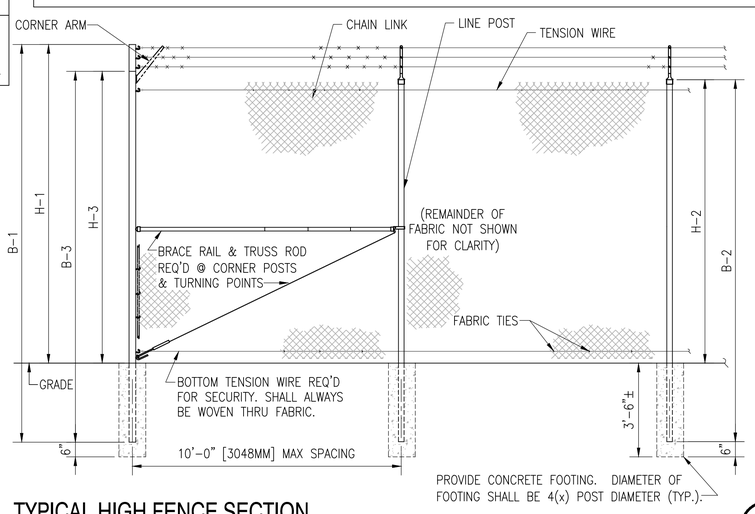

TYPICAL HIGH FENCE SECTION A1 A-501 A-501

NOT TO SCALE

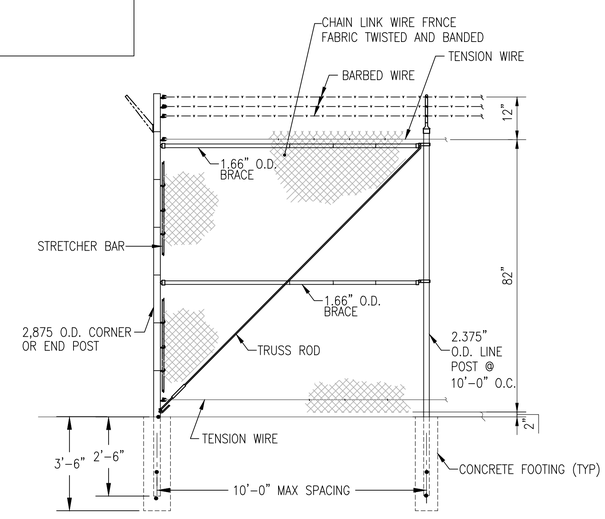

TYPICAL CORNER OF TERMINAL SECTION A3 A-501 A-501

NOT TO SCALE

FENCE HEIGHT
NOMINAL HEIGHT W/ BARBED WIRE
8'–0" [2438MM]

UPRIGHT END & CORNER POSTS	
B–1 BAR LENGTH	H–1 HEIGHT ABOVE GRADE
11'–0" [3353MM]	8'–0 5/8" [2454MM]
LINE POSTS	
B–2 BAR LENGTH	H–2 HEIGHT ABOVE GRADE
9'–8" [2946MM]	6'–8 7/8" [2054MM]
CORNER POSTS WITH CORNER ARM	
B–3 BAR LENGTH	H–3 HEIGHT ABOVE GRADE
10'–0" [3048MM]	7'–0 5/8" [2150MM]

NOTE: IF GATE HINGES ARE NOT OPPOSING (AS SHOWN ABOVE) OR LEAF IS NOT LOCKED MECHANICALLY TO THE HINGES, WELD AN ANGLE, PLATE, OR BLOCK ABOVE HINGE TO RESTRICT LEAF FROM BEING REMOVED OR LIFTED OFF. RESTRICTION SHALL NOT HINDER OPERATION OF GATE.

SYM	DESCRIPTION	DATE	APPR

SEAL

DCS INFRASTRUCTURE, LLC
DESIGN & CONSTRUCTION SERVICES
309 FELLOWSHIP ROAD
MT. LAUREL, N.J. 08054 609-951-1488
3249 ROUTE 112
BLDG. 4, STE. 1B
MEDFORD, N.Y. 11763 631-320-1706
A/E INFO

APPROVED

FOR COMMANDER NAVFAC

ACTIVITY

FINAL SUBMISSION

SATISFACTORY TO DATE 1/11/2012

DES DRW CHK

<<DM/DM>> –

BRANCH MANAGER –

CHIEF ENG/ARCH –

<<XXX>> –

DEPARTMENT OF THE NAVY
NAVAL FACILITIES ENGINEERING COMMAND
NAVAL WEAPONS STATION EARLE

NAVAL FACILITIES ENGINEERING COMMAND - MID ATLANTIC
COLTS NECK, NEW JERSEY

FENCE IDIQ CONTRACT

CHAIN LINK FENCE & GATE – STANDARD DETAILS

SCALE:

EPROJECT NO.: –

CONSTR. CONTR. NO. N6472-08-D-2025

NAVFAC DRAWING NO. 12610883

SHEET 2 OF 15

A-501

DRAWFORM REVISION: 10 MARCH 2009

FILE NAME: P:\104 NWS Earle\104-11-16 Fence IDIQ\Final Submittal\Drawings\N6472080D2025-A-DT.501.dwg LAYOUT NAME: Layout1 PLOTTED: Wednesday, January 11, 2012 - 4:26pm USER: Christian Rojas

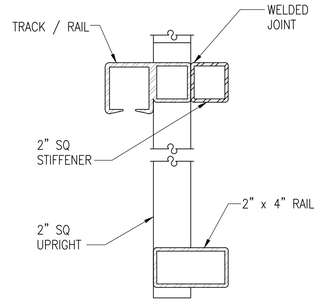

SECTION (TYP)

NOT TO SCALE

D1 A-502 | A-502

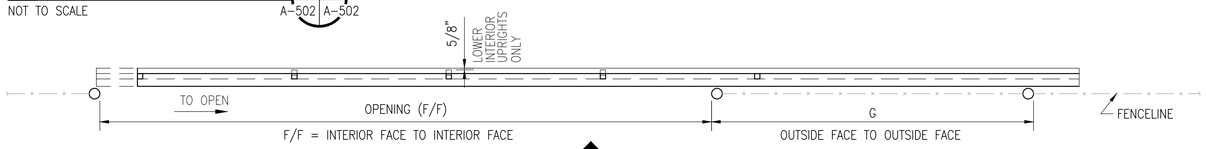

GATE PLAN

NOT TO SCALE

C1 CIVIL DWGS | A-502

SAMPLING OF SIZES:

OPENING (F/F)	NOMINAL HEIGHT (H)	LENGTH (L)	GATE POSTS (G)	BAYS / OVERHANG
37'-0" [11278MM]	8'-0" [2438MM]	53'-3" [16231MM]	16'-0" [4877MM]	5 (FABRIC) / 2 (W/O)
30'-0" [9144MM]	8'-0" [2438MM]	42'-3" [12878MM]	12'-0" [3658MM]	4 (FABRIC) / 2 (W/O)
24'-0" [7315MM]	8'-0" [2438MM]	36'-3" [11049MM]	12'-0" [3658MM]	3 (FABRIC) / 2 (W/O)

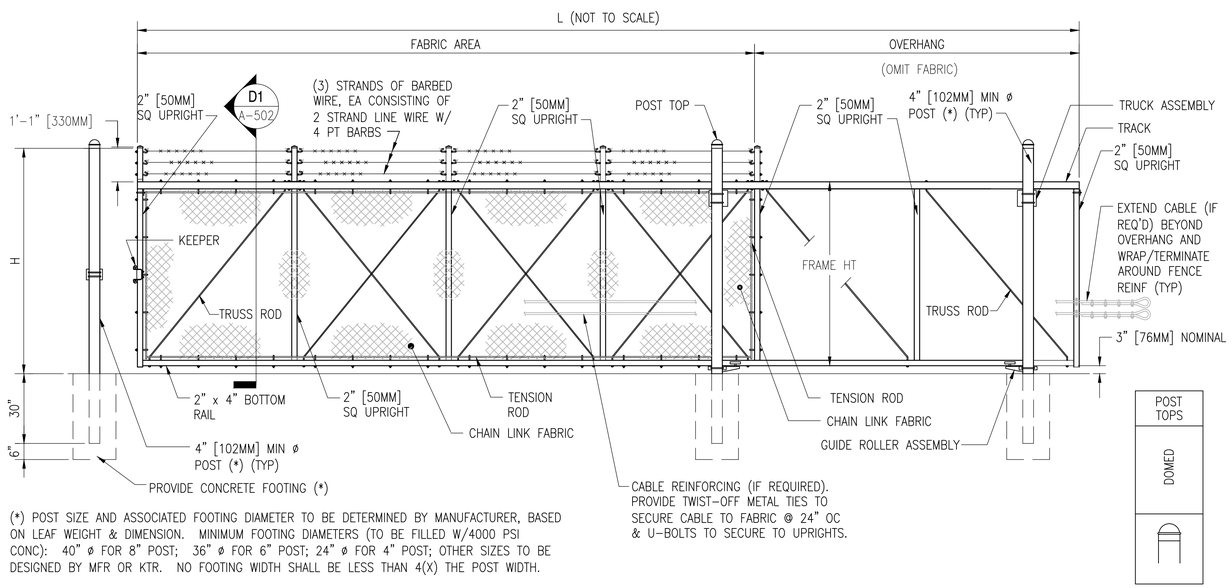

(*) POST SIZE AND ASSOCIATED FOOTING DIAMETER TO BE DETERMINED BY MANUFACTURER, BASED ON LEAF WEIGHT & DIMENSION. MINIMUM FOOTING DIAMETERS (TO BE FILLED W/4000 PSI CONC): 40" ø FOR 8" POST; 36" ø FOR 6" POST; 24" ø FOR 4" POST; OTHER SIZES TO BE DESIGNED BY MFR OR KTR. NO FOOTING WIDTH SHALL BE LESS THAN 4(X) THE POST WIDTH.

TYPICAL SINGLE CANTILEVERED SLIDING GATE ELEVATION- (4) BAYS SHOWN

WITH ROUND POSTS & WITH BARBED WIRE

NOT TO SCALE

A1 A-502 | A-502

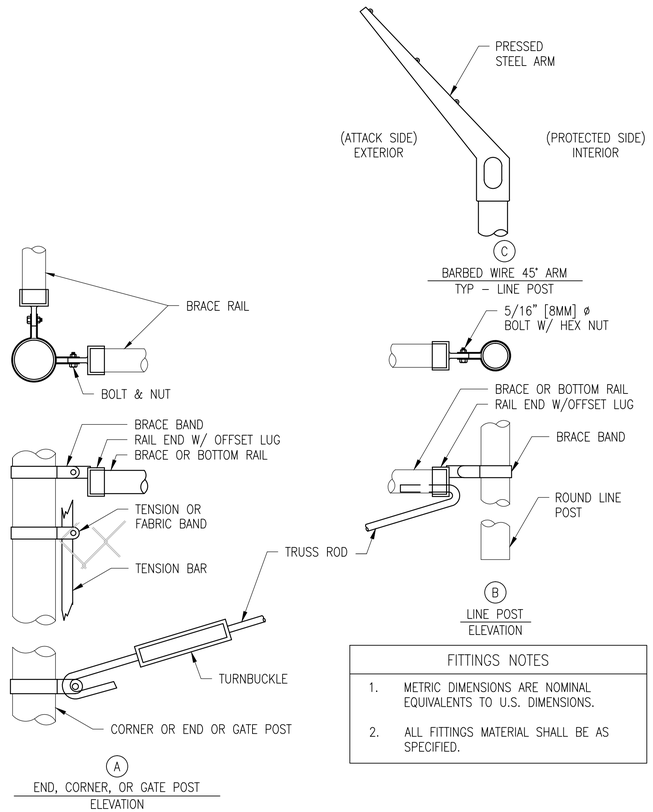

FITTINGS NOTES
1. METRIC DIMENSIONS ARE NOMINAL EQUIVALENTS TO U.S. DIMENSIONS.
2. ALL FITTINGS MATERIAL SHALL BE AS SPECIFIED.

ROUND POST FITTINGS DETAILS

NOT TO SCALE

B4 A-501 | A-502

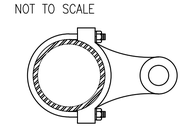

SECTION

(*) NOTE: WELD HINGES TO POST IF INSTALLING CABLE REINF ON GATES. ENSURE CORRECT GATE HEIGHT FOR FULL OPERATION PRIOR TO WELDING (TYPICAL).

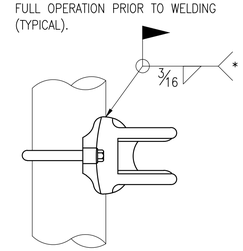

ELEVATION

HINGE DETAIL

NOT TO SCALE

A4 A-501 | A-502

CANTILEVER GATE NOTES

1. CONSIDERATION: PER PAGE 29 OF UFC 4-22-03. THE GUIDANCE SUGGESTS USING BIPARTING GATES (2 CANTILEVERS MEETING IN CENTER OF THE OPENING WHEN FULLY EXTENDED) FOR ALL OPENINGS OVER 24'. THIS CONGIFURATION CAN ACHIEVE A 48' OPENING. ADDITIONAL SPACE IS REQ'D ON BOTH SIDES, SO NOT IDEAL FOR ALL LOCATIONS. IT DOES ALLOW FOR THE RESTRICTION OF TRAFFIC IN EITHER DIRECTION.

GRAPHIC SCALES

1/2" = 1'-0"

1-1/2" = 1'-0"

SYM	DESCRIPTION	DATE	APPR

NAVFAC

SEAL

DCS INFRASTRUCTURE, LLC
DESIGN & CONSTRUCTION SERVICES
309 FELLOWSHIP ROAD
MT. LAUREL, N.J. 08054 609-351-1484
3249 ROUTE 112
BLDG. A, STE. 1B
MEDFORD, N.Y. 11763 631-320-1706

A/E INFO

APPROVED
LWM LWM
FOR COMMANDER NAVFAC

ACTIVITY MULE, P.E.
FINAL SUBMISSION
SATISFACTORY TO DATE 1/11/2012
DES DRW CHK
<<PM/DM>> FITGH, P.E.
BRANCH MANAGER –
CHIEF ENG/ARCH –
<<XXX>> –

NAVAL FACILITIES ENGINEERING COMMAND
COLES NECK, NEW JERSEY
DEPARTMENT OF THE NAVY
NAVAL FACILITIES ENGINEERING COMMAND - MID ATLANTIC
NAVAL WEAPONS STATION EARLE

FENCE IDIQ CONTRACT

CHAIN LINK FENCE – CANTILEVER GATE DETAILS

SCALE:
EPROJECT NO.: –
CONSTR. CONTR. NO. N6472-08-D-2025
NAVFAC DRAWING NO. 12610884
SHEET 3 OF 15

A-502

DRAWFORM REVISION: 10 MARCH 2009

FILE NAME: P:\Temp\AcPublish_4312\N6472080205-A-01.502.dwg LAYOUT NAME: Layout1 PLOTTED: Wednesday, January 11, 2012 - 4:25pm USER: Christian Rojas

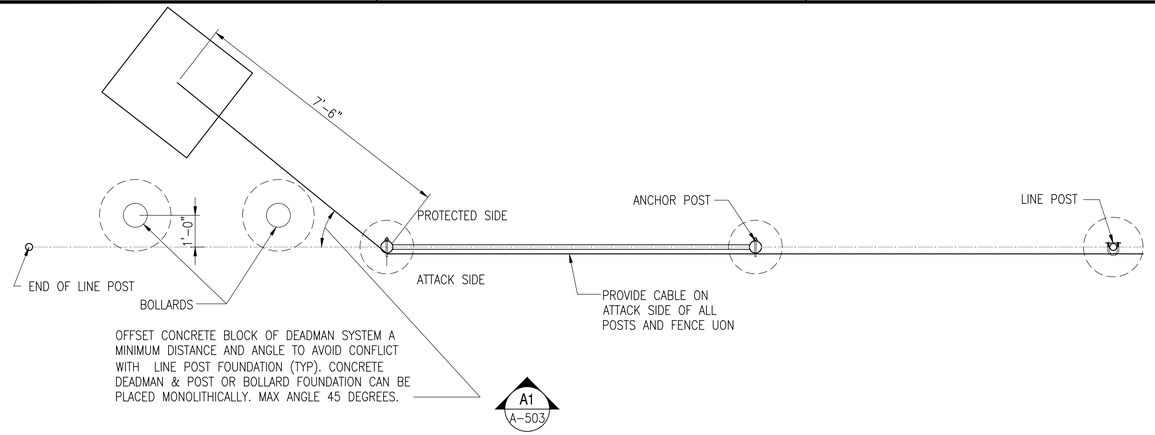

TYPICAL PLAN OF END POST DEADMAN AND LINE POST LAYOUT

SCALE: 1/2" = 1'-0"

C1
CIVIL DWGS | A-503

NOTE: FOR RETROFITTING OF EXIST CLF, CABLE CAN BE PLACED ON THE ATTACK SIDE OF THE FENCE FABRIC. FOR NEW CONSTRUCTION, CABLE SHALL BE INSTALLED ON ATTACK SIDE OF POST, BETWEEN POST AND FABRIC.

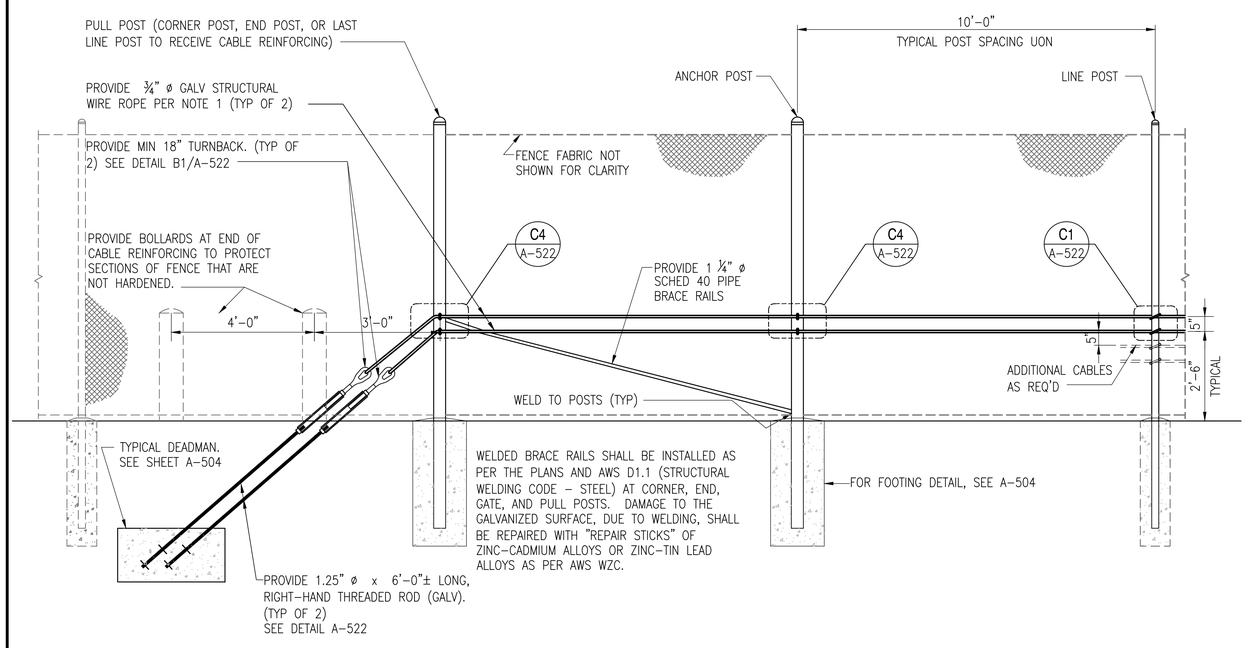

TYPICAL ELEVATION OF END POST DEADMAN AND LINE POST LAYOUT

SCALE: 1/2" = 1'-0"

A1
A-503 | A-503

LAYOUT OF REINFORCING

DESIGNER OF RECORD TO LOCATE DEADMEN ON SITE PLANS, SATISFYING SPACING CRITERIA, OVERLAPS, AND FENCE CORNERS / TURNING POINTS. AT GATES IT IS DESIRABLE TO HAVE TRAFFIC ON EITHER SIDE OF A MEDIAN TO OPERATE AND PROTECT INDEPENDENTLY (NOT UTILIZING THE SAME DEADMAN SYSTEMS). THEREFORE DEADMEN SHOULD BE PLACED IN THE MEDIAN TO ANCHOR THE GATE REINFORCING FOR EACH SIDE OF THE ROAD. IF THERE IS NO PHYSICAL MEDIAN (MERELY PAINTED LINES), LIMITED ROOM, OR UTILITY CONFLICTS THAT DO NOT ALLOW FOR DEADMEN PLACEMENT BETWEEN THE GATES, ENSURE THAT THE CABLING FOR BOTH GATES ARE CONNECTED-- EITHER DIRECTLY OR VIA AN INTERMEDIATE CABLE WHICH CREATES AN INTEGRAL CABLE SYSTEM ACROSS THE ENTIRE GATE AREA.

MODIFICATIONS TO TYPICAL DESIGN

NOTE FOR CONTRACTOR: IF LARGER DESIGN THREATS OR CUSTOMER REQUESTS INDICATE A NEED FOR GREATER SECURITY, MORE 3/4" ø CABLES CAN BE UTILIZED OR THE CABLES CAN BE UPGRADED TO 1" ø. BOTH SCENARIOS REQUIRE THE DEADMAN (WHICH WILL NEED TO BE LARGER) TO BE DESIGNED BY A PROFESSIONAL ENGINEER TO SATISFY THE CRITERIA OUTLINED IN REINF NOTE 18 ON THIS SHEET. FOR BIDDING PURPOSES, ESTABLISH A UNIT COST FOR ADDITIONAL EXCAVATION AND NEW CONCRETE PER CUBIC FOOT.

IF 1" ø CABLE IS USED, SPECIFICATIONS SHALL MATCH REINF NOTE 1 ON THIS SHEET, EXCEPT THE CABLE SHALL HAVE A MINIMUM BREAKING STRENGTH OF 70,000 POUNDS (35 TONS). OTHER COMPONENTS, SUCH AS EYEBOLTS, U-BOLTS, ROPE CLIPS, THIMBLES, AND OTHER ASSOCIATED HARDWARE SHALL BE SIZED ACCORDINGLY.

GRAPHIC SCALES

1/2" = 1'-0" 0 1' 2' 4'

REINFORCING NOTES

1. REINFORCING CABLES SHALL BE U.S. DOMESTIC 3/4" ø 6x19 CLASS WIRE ROPE, REGULAR LAY, EXTRA IMPROVED PLOW STEEL (EIP), INDEPENDENT WIRE ROPE CORE (IWRC), CONFORMING TO ASTM A1023 AND GALVANIZED IN ACCORDANCE WITH ASTM A475 CLASS A, & HAVE A MINIMUM BREAKING STRENGTH OF 40,000 POUNDS (20 TONS). CABLES WITH A BLACK VINYL COATING, SHALL NOT BE IMPREGNATED.
2. CABLES SHALL BE CONTINUOUS FROM DEADMAN TO DEADMAN. NO SPLICES IN CABLE SHALL BE ALLOWED. CABLE BARRIER SHALL BE INSTALLED BETWEEN FENCE POST AND FENCE FABRIC AS PER PLANS. U-BOLTS SHALL BE INSTALLED PERPENDICULAR TO THE LAY OF THE STRANDS OF THE WIRE ROPE AND SHALL BE TIGHTENED AFTER SAG IN CABLE BARRIER HAS BEEN REMOVED. UNLESS INDICATED OTHERWISE, CONCRETE DEADMAN SPACING SHALL BE AT MAXIMUM 200' INTERVALS & TURNING POINTS (EXTERNAL CORNERS).
3. WIRE ROPE ENDS SHALL TERMINATE AROUND TURNBUCKLES, GATE POSTS OR EXTRA HEAVY-DUTY WIRE ROPE THIMBLES (AT GATES). THESE TERMINATIONS REQUIRE 18" MINIMUM OF ROPE FOR TURN BACK AND A MINIMUM OF (4)- CLIPS EACH (EQUAL SPACING).
4. CONTRACTOR SHALL FIELD VERIFY ALL DIMENSIONS PRIOR TO ORDERING MATERIALS.
5. DEADMEN SHALL BE INSTALLED ON THE SECURED SIDE (INTERIOR) OF THE FENCE; WHILE CABLES SHALL BE INSTALLED ON THE EXTERIOR SIDE OF POST.
6. PROVIDE NECESSARY SLACK IN CABLES (GATES ONLY) TO ALLOW FOR FULL SWING OF ALL GATE LEAVES.
7. OFFSET DEADMAN SYSTEMS FROM FENCELINE (PLAN VIEW) TO AVOID CONFLICT WITH EXISTING FENCE POSTS.
8. ALLOW EPOXY ANCHOR BOLTS (MIN 2 DAYS) & CONCRETE DEADMEN (MIN 7 DAYS) TO CURE, PRIOR TO APPLYING LOADS (INSTALLING TURNBUCKLES & STRAIGHTENING CABLES).
9. ALL WELDING SHALL BE DONE IN ACCORDANCE WITH AWS D1.1. ALL WELD MATERIAL SHALL BE E70XX ELECTRODES.
10. STRUCTURAL STEEL CONSTRUCTION SHALL BE IN ACCORDANCE WITH THE NINTH EDITION OF THE AISC "MANUAL OF STEEL CONSTRUCTION FOR ALLOWABLE STRESS DESIGN.
11. STRUCTURAL STEEL SHALL CONFORM TO ASTM A36 AND SHALL HAVE A MINIMUM YIELD STRESS OF 36,000 PSI.
12. ALL STRUCTURAL STEEL MEMBERS AND HARDWARE USED IN CABLE ANCHORING SYSTEM SHALL BE HOT-DIPPED GALVANIZED. ANY AREAS WHERE COATING IS DAMAGED OR REMOVED SHALL BE COVERED WITH A ZINC RICH COMPOUND.
13. TURNBUCKLES SHALL BE 1¼"x18", TYPE I, GALVANIZED IN ACCORDANCE WITH ASTM F1145.
14. WIRE ROPE CLAMPS SHALL BE TYPE I, GALVANIZED, AND CONFORM TO FS FF-C-450.
15. ALL THREADED RODS, U-BOLTS, AND BOLTS SHALL CONFORM TO ASTM A307 AND SHALL BE INSTALLED WITH F844 WASHERS AND A563 NUTS. ENTIRE BOLT ASSEMBLY SHALL BE GALVANIZED IN ACCORDANCE WITH ASTM A153. INSTALL PER MANUFACTURER'S RECOMMENDATIONS.
16. ZINC RICH COMPOUND FOR REPAIRS SHALL BE 95% METALLIC ZINC, BY WEIGHT IN DRIED FILM; CONFORMING TO FED SPEC DOD-P-21035A & MEETING MILITARY SPEC MIL-P-26915A. INSTALL AT LEAST TWO COATS, 4 MILS MIN TOTAL THICKNESS.
17. ALL CONCRETE WORK SHALL BE IN ACCORDANCE WITH THE LATEST EDITION OF ACI 318. CONCRETE SHALL HAVE A MINIMUM 28-DAY COMPRESSIVE STRENGTH OF 4000 PSI. THE MINIMUM CONCRETE COVER SHALL BE 3", UNLESS OTHERWISE NOTED.
18. DESIGN CRITERIA:
    UFC 4-022-03 "SECURITY ENGINEERING: FENCES, GATES AND GUARD FACILITIES"

    NFESC UG-2031-SHR "USER'S GUIDE ON PROTECTION AGAINST VEHICLE BOMBS" (5/98)
19. AT CABLE REINFORCING GATES, PROVIDE TWIST-OFF METAL TIES TO SECURE CABLE TO GATE FABRIC @ 24" OC & U-BOLTS TO SECURE TO GATE UPRIGHTS. MODIFY AS NEEDED TO FACILITATE OPERATION OF GATE.

SYM	DESCRIPTION	DATE	APPR

NAVFAC

SEAL

DCS INFRASTRUCTURE, LLC
DESIGN & CONSTRUCTION SERVICES
309 FELLOWSHIP ROAD
MT. LAUREL, N.J. 08054 609-351-1484
3249 ROUTE 112
BLDG. 6, STE. 1B
MEDFORD, N.Y. 11763 631-320-1706

A/E INFO

APPROVED

FOR COMMANDER NAVFAC

ACTIVITY

FINAL SUBMISSION

SATISFACTORY TO DATE 1/11/2012

DES	DRW	CHK
<<PM/DM>>		–
BRANCH MANAGER		–
CHIEF ENG/ARCH		–
<<XXX>>		–

DEPARTMENT OF THE NAVY
NAVAL FACILITIES ENGINEERING COMMAND
NAVAL WEAPONS STATION EARLE

NAVAL FACILITIES ENGINEERING COMMAND - MID ATLANTIC
COLTS NECK, NEW JERSEY

FENCE IDIQ CONTRACT

CHAIN LINK FENCE – CABLE REINFORCING DETAILS AT END POST

SCALE:
EPROJECT NO.: –
CONSTR. CONTR. NO. N6472-08-D-2025
NAVFAC DRAWING NO. 12610885
SHEET 4 OF 15

A-503

DRAWFORM REVISION: 10 MARCH 2009

FILE NAME: P:\Temp\AcPublish_4312\N6472080202S-A-01-503.dwg LAYOUT NAME: PLOTTED: Wednesday, January 11, 2012 - 4:24pm USER: Christian Rojas

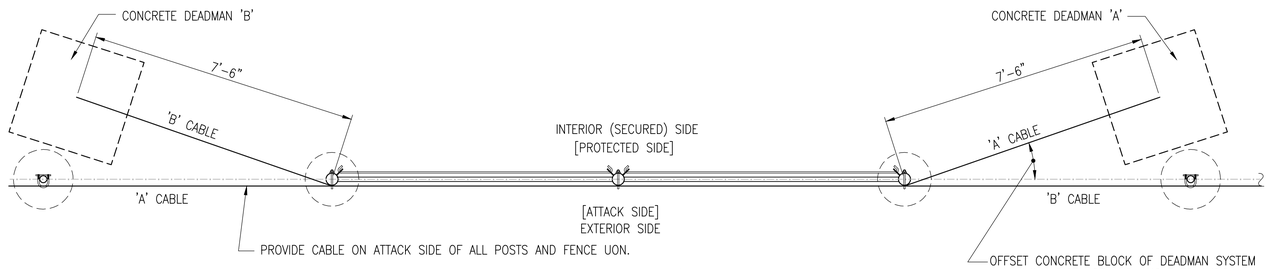

NOTE: FOR RETROFITTING OF EXIST CLF, CABLE CAN BE PLACED ON THE ATTACK SIDE OF THE FENCE FABRIC. FOR NEW CONSTRUCTION, CABLE SHALL BE INSTALLED ON ATTACK SIDE OF POST, BETWEEN POST AND FABRIC.

TYPICAL PLAN OF DEADMAN AND LINE POST LAYOUT

SCALE: 1/2" = 1'-0"

C1 CIVIL DWGS A-504

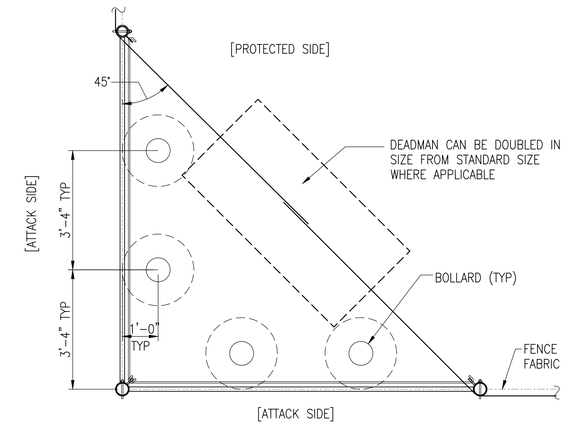

TYPICAL PLAN OF TURNING POINT POST LAYOUT

SCALE: 1/2" = 1'-0"
EXTERNAL CORNER SHOWN

C4 CIVIL DWGS A-504

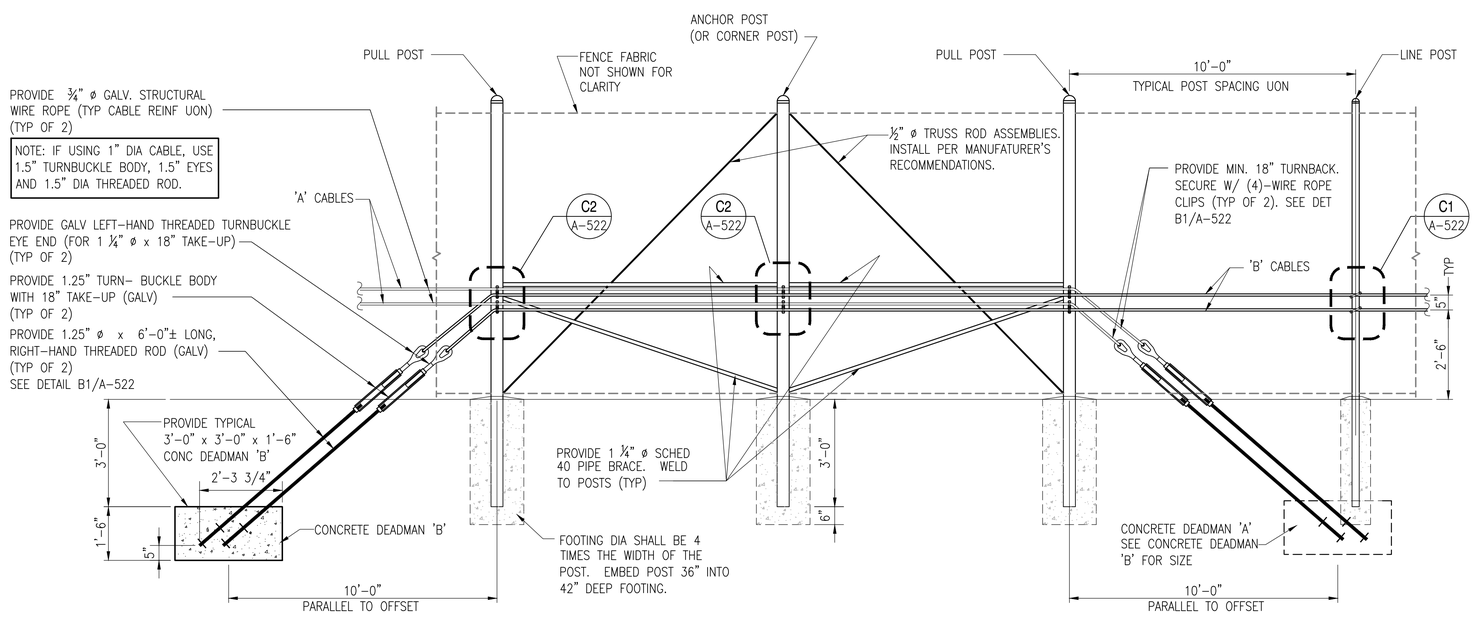

TYPICAL ELEVATION OF DEADMAN AND LINE POST LAYOUT

SCALE: 1/2" = 1'-0"

A1 A-504 A-504

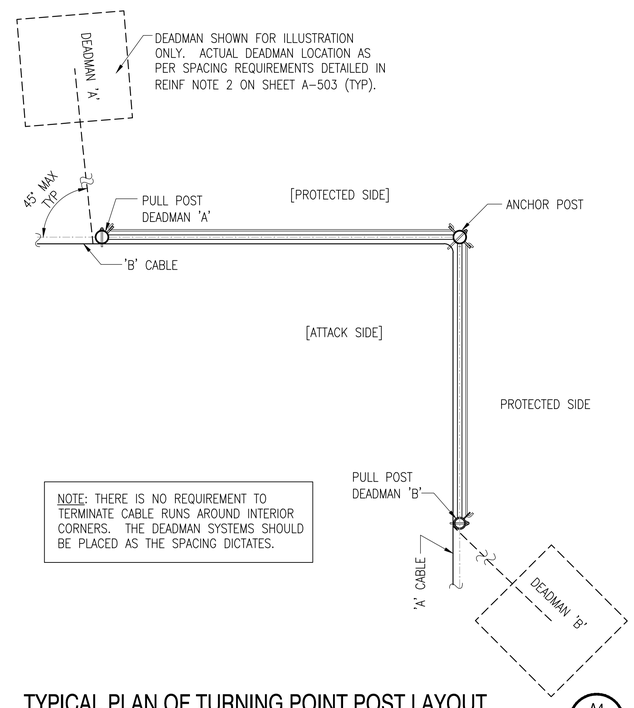

NOTE: THERE IS NO REQUIREMENT TO TERMINATE CABLE RUNS AROUND INTERIOR CORNERS. THE DEADMAN SYSTEMS SHOULD BE PLACED AS THE SPACING DICTATES.

TYPICAL PLAN OF TURNING POINT POST LAYOUT

SCALE: 1/2" – 1'-0"
INTERNAL CORNER SHOWN

A4 CIVIL DWGS A-504

GRAPHIC SCALES

1/2" = 1'-0" 0 1' 2' 4'

SYM	DESCRIPTION	DATE	APPR

NAVFAC

SEAL

DCS INFRASTRUCTURE, LLC
DESIGN & CONSTRUCTION SERVICES
309 FELLOWSHIP ROAD MT. LAUREL, N.J. 08054 609-351-1486
3249 ROUTE 112 BLDG. A, STE. 1B MEDFORD, N.Y. 11763 631-320-1706

A/E INFO

APPROVED:

FOR COMMANDER NAVFAC

ACTIVITY
FINAL SUBMISSION

SATISFACTORY TO DATE 1/11/2012

DES	DRW	CHK
<<PM/DM>>	–	
BRANCH MANAGER	–	
CHIEF ENG/ARCH	–	
<<XXX>>	–	

DEPARTMENT OF THE NAVY
NAVAL FACILITIES ENGINEERING COMMAND
NAVAL WEAPONS STATION EARLE
NAVAL FACILITIES ENGINEERING COMMAND - MID ATLANTIC
COLTS NECK, NEW JERSEY

FENCE IDIQ CONTRACT

CHAIN LINK FENCE – CABLE REINF DETAILS AT DEADMAN & LINE POST

SCALE:
EPROJECT NO.: –
CONSTR. CONTR. NO. N6472-08-D-2025
NAVFAC DRAWING NO. 12610886
SHEET 5 OF 15

A-504

DRAWFORM REVISION: 10 MARCH 2009

FILE NAME: P:\104 NWS Earle\104-11-16 Fence IDIQ\Final Submittal\Drawings\N6472080202S-A-01.504.dwg LAYOUT NAME: F-### PLOTTED: Wednesday, January 11, 2012 - 4:20pm USER: Christian Rojas

PLAN VIEW (GATE OPEN)

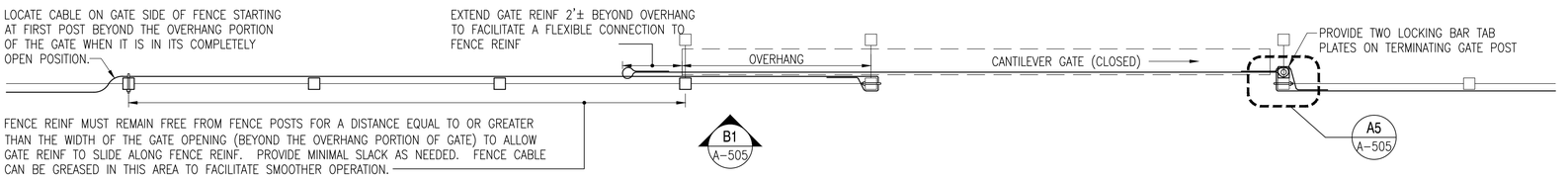

PLAN VIEW (GATE CLOSED)

C1 CIVIL DWGS A-505

SCALE: 1/2" = 1'-0"

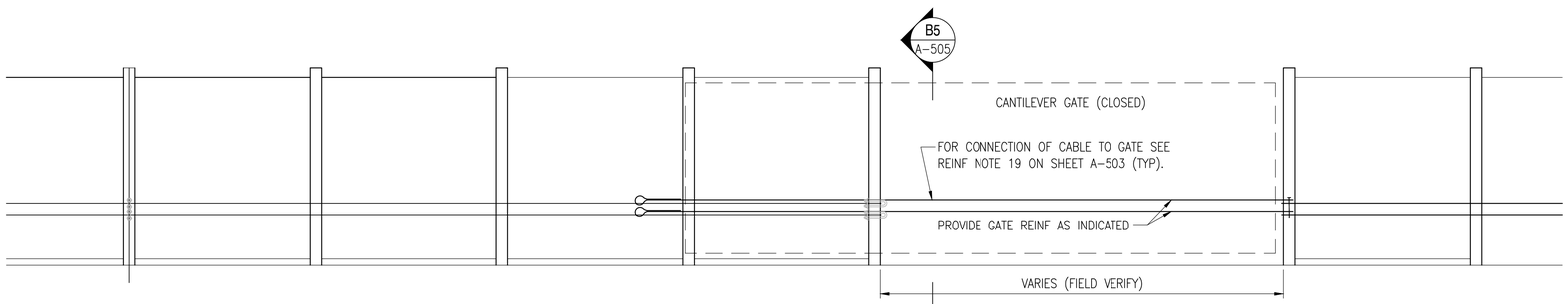

ELEVATION - TYPICAL CABLE REINFORCING CANTILEVER SLIDE GATE

B1 A-505 A-505

SCALE: 1/2" = 1'-0"

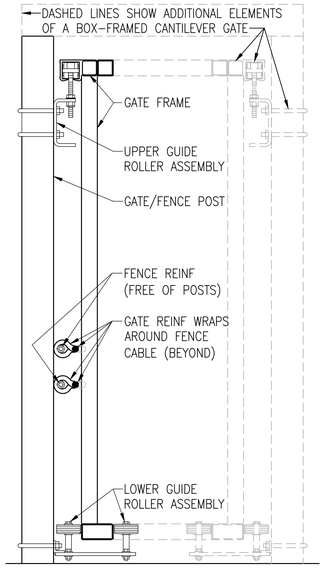

GATE SECTION

B5 A-505 A-505

SCALE: 1/2" = 1'-0"

*NOTE: SEE DETAIL D1 ON SHEET A-523 FOR ALTERNATIVE METHOD.

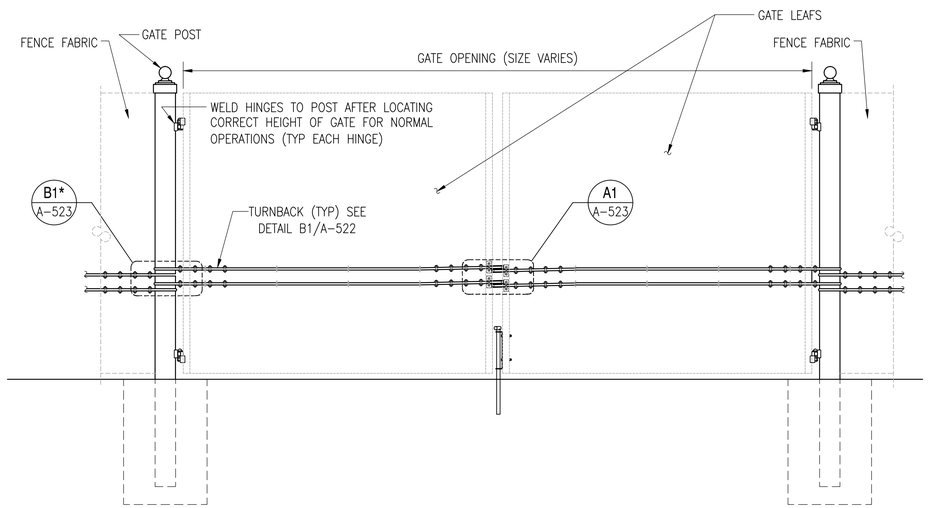

ELEVATION - TYP CABLE REINFORCING DOUBLE FOR SWING GATE

A1 CIVIL DWGS A-505

SCALE: 1/2" = 1'-0"

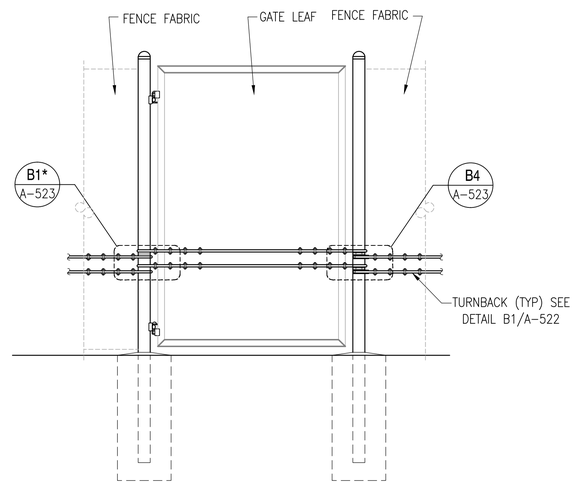

ELEVATION - TYP CABLE REINF SINGLE SWING GATE

A3 CIVIL DWGS A-505

SCALE: 1/2" = 1'-0"

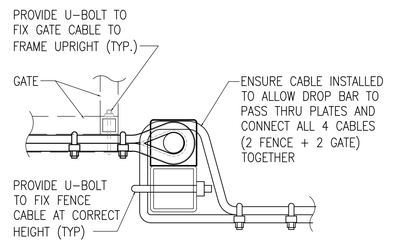

GATE SECTION

A5 A-505 A-505

NOT TO SCALE

GRAPHIC SCALES

1/2" = 1'-0" 0 1' 2' 4'

APPR	DATE	DESCRIPTION	SYM

NAVFAC

SEAL

DCS INFRASTRUCTURE, LLC
DESIGN & CONSTRUCTION SERVICES
309 FELLOWSHIP ROAD MT. LAUREL, N.J. 08054 609-351-1488
3249 ROUTE 112 BLDG. A, STE. 1B MEDFORD, N.Y. 11763 631-320-1706

A/E INFO

APPROVED

FOR COMMANDER NAVFAC

ACTIVITY: FINAL SUBMISSION

SATISFACTORY TO DATE 1/11/2012

DES DRW CHK

<<PM/DM>> –

BRANCH MANAGER –

CHIEF ENG/ARCH –

<<XXX>> –

DEPARTMENT OF THE NAVY
NAVAL FACILITIES ENGINEERING COMMAND
NAVAL WEAPONS STATION EARLE

NAVAL FACILITIES ENGINEERING COMMAND - MID ATLANTIC
COLES NECK, NEW JERSEY

FENCE IDIQ CONTRACT

CHAIN LINK FENCE – CABLE REINFORCING DETAILS AT GATES

SCALE:

EPROJECT NO.: –

CONSTR. CONTR. NO. N6472-08-D-2025

NAVFAC DRAWING NO. 12610887

SHEET 6 OF 15

A-505

DRAWFORM REVISION: 10 MARCH 2009

FILE NAME: P:\Temp\AcPublish_4312\N6472080202S-A-01.505.dwg LAYOUT NAME: A-505 PLOTTED: Wednesday, January 11, 2012 - 4:14pm USER: Christian Rojas

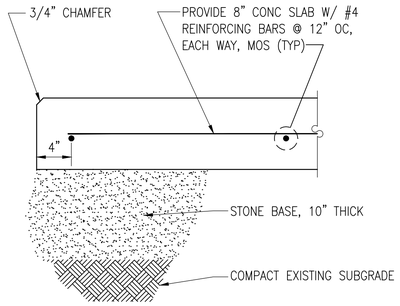

TURNSTILE MOUNTING SLAB (C1)

SCALE: 1-1/2" = 1'-0" — A-521 | A-521

1 1/2" = 1'-0" — 0 4" 8" 1'-4"

TURNSTILE NOTES:

1. TURNSTILE SHALL BE COMPOSED OF CARBON STEEL. ALL MATERIALS SHALL BE HOT-DIPPED GALVANIZED IN ACCORDANCE WITH ASTM A123.
2. TURNSTILE SHALL HAVE BI-DIRECTIONAL CONTROLS: IN THE CASE OF A POWER FAILURE, OUTBOUND TRAFFIC SHALL BE SET TO "FAIL SAFE"; THE INBOUND TRAFFIC WILL HAVE A "FAIL LOCK" MECHANISM (UNLESS OTHERWISE DIRECTED BY THE ACTIVITY VIA THE CONTRACTING OFFICER).
3. PROVIDE CARD READER MOUNTING PLATES FOR BOTH SIDES (INBOUND & OUTBOUND) OF TURNSTILE. CARD READER WILL BE INSTALLED BY THE ACTIVITY AT A LATER DATE.
4. BRACE BARRIER POST AT TOP TO ADJACENT VERTICAL SURFACE.
5. ALLOW 5 INCH CLEARANCE ABOVE TOP OF TURNSTILE TO REMOVE LIFT-OFF TYPE TOP COVER.
6. CONCRETE MOUNTING SLAB MUST BE LEVEL WITHIN 1/4". SEE DETAIL C2 THIS SHEET FOR CONC MOUNTING PAD.
7. CONTRACTOR SHALL PROVIDE AN ELECTRICAL 3-ROTOR FULL HEIGHT TURNSTILE AS MANUFACTURED BY TOMSED, MODEL THT-100ECP(3), OR APPROVED EQUAL.
8. TURNSTILE SHALL HAVE FINISH TO MATCH ADJACENT FENCEWORK: POWDER COATED BLACK FOR ORNAMENTAL FENCE AND GALVANIZED FOR CHAIN-LINK.
9. INSTALL 3 STRANDS BARBED WIRE OR CONCERTINA WIRE OVER TOP CHANNEL OF TURNSTILE (BETWEEN ADJACENT FENCE POSTS) TO HINDER SCALING UNIT.

TURNSTILE SKETCHES:

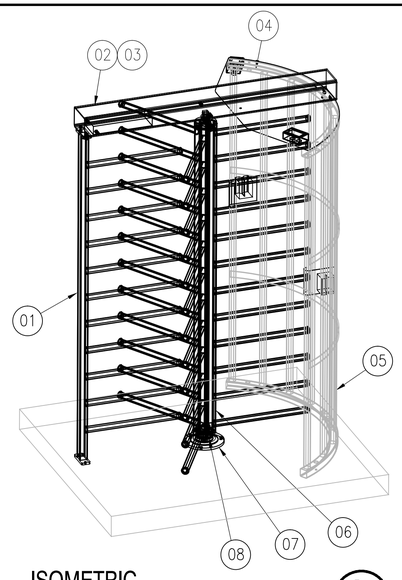

ISOMETRIC (B1)

NOT TO SCALE — A-521 | A-521

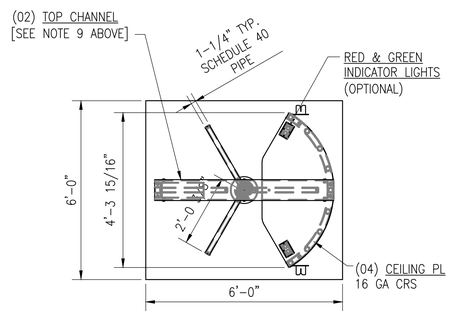

PLAN VIEW (B2)

NOT TO SCALE — CIVIL DWGS | A-521

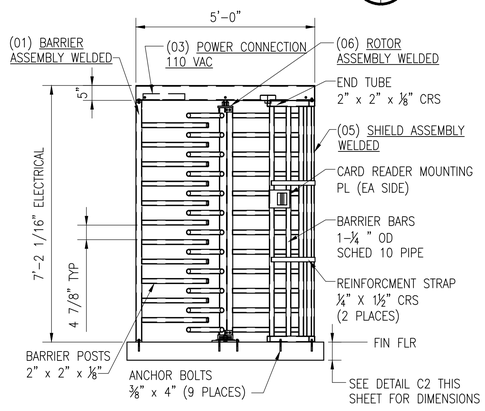

ELEVATION VIEW (A2)

NOT TO SCALE — A-521 | A-521

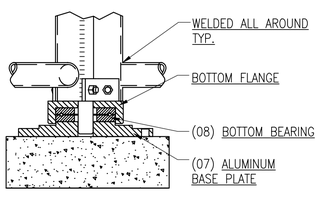

BOTTOM BEARING DETAIL (A1)

NOT TO SCALE — A-521 | A-521

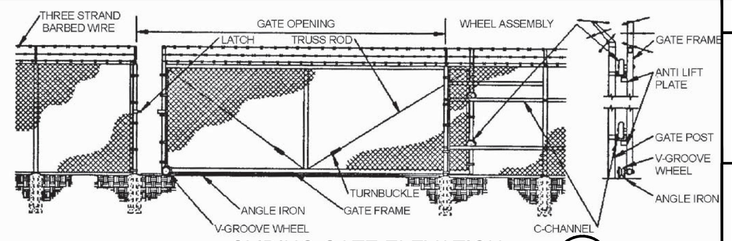

SLIDING GATE ELEVATION (D4)

NOT TO SCALE — A-521 | A-521

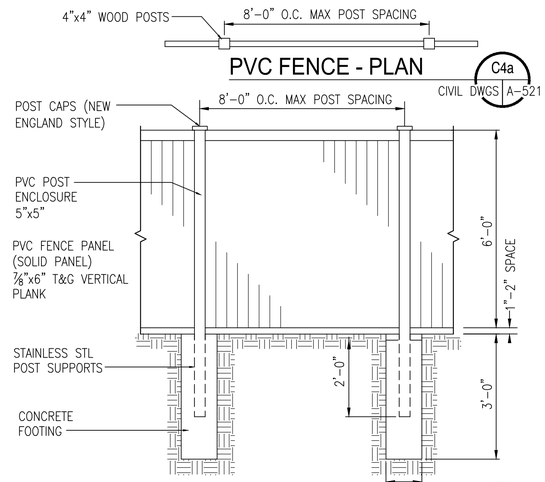

PVC FENCE - PLAN (C4a)

CIVIL DWGS | A-521

PVC FENCE ELEVATION (C4)

SCALE: 1/2" = 1'-0" — A-521 | A-521

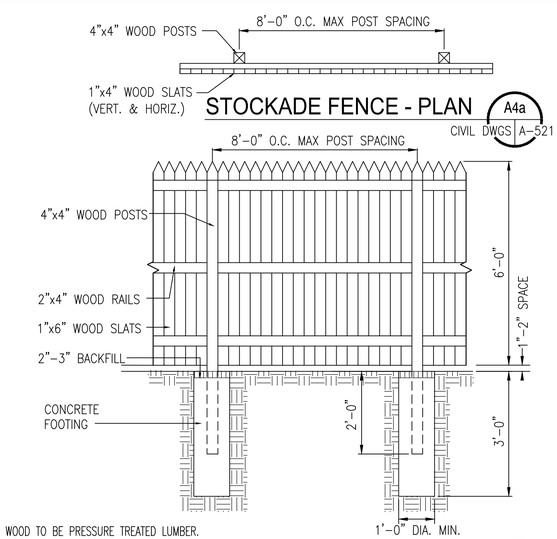

STOCKADE FENCE - PLAN (A4a)

CIVIL DWGS | A-521

NOTE: ALL WOOD TO BE PRESSURE TREATED LUMBER.

STOCKADE FENCE ELEVATION - "PRIVATE" SIDE SHOWN (A4)

SCALE: 1/2" = 1'-0" — A-521 | A-521

GRAPHIC SCALES

1" = 1'-0" — 0 6" 1' 2'

1 1/2" = 1'-0" — 0 4" 8" 1'-4"

3" = 1'-0" — 0 3" 6" 9"

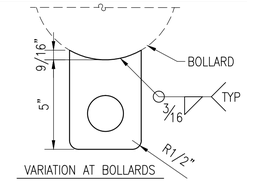

TAB PLATE DETAIL (D5)

SCALE: 3" = 1'-0" — CIVIL DWGS | S-705

NOTE: STEEL PIPE FOR BOLLARDS SHALL CONFORM TO ASTM A53, TYPE E OR S, GALVANIZED.

NOTE: TAB PLATES MAY BE WELDED VERTICALLY WHEN USING BOLLARDS FOR CABLE REINFORCING ALONG FENCELINE.

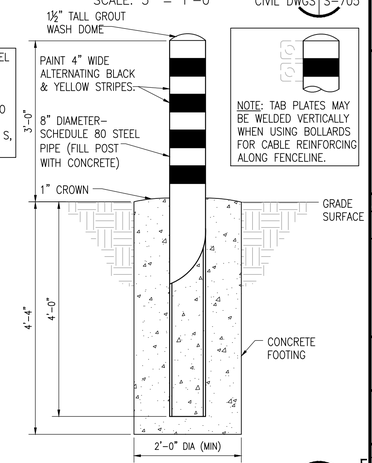

CONC FILLED BOLLARD - FOOTING (C5)

SCALE: 1 = 1'-0" — CIVIL DWGS | S-705

NOTE: CONTRACTOR SHALL HAVE PLATED BOLLARD CONNECTION ANALYZED AND STAMPED BY A REGISTERED ENGINEER FOR IT BE USED FOR AFTP PURPOSES.

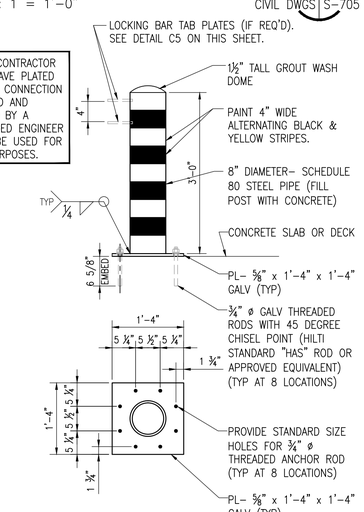

CONC FILLED BOLLARD - PALTE (A5)

SCALE: 1 = 1'-0" — CIVIL DWGS | S-705

SYM	DESCRIPTION	DATE	APPR

NAVFAC

SEAL

DCS INFRASTRUCTURE, LLC
DESIGN & CONSTRUCTION SERVICES
309 FELLOWSHIP ROAD, MT. LAUREL, N.J. 08054 — 609-351-1486
3249 ROUTE 112, BLDG. A, STE. 1B, MEDFORD, N.Y. 11763 — 631-320-1706

A/E INFO

APPROVED:

FOR COMMANDER NAVFAC

ACTIVITY

FINAL SUBMISSION

SATISFACTORY TO — DATE 1/11/2012

DES	DRW	CHK
<<PM/DM>>		–
BRANCH MANAGER		–
CHIEF ENG/ARCH		–
<<XXX>>		–

DEPARTMENT OF THE NAVY
NAVAL FACILITIES ENGINEERING COMMAND
NAVAL WEAPONS STATION EARLE

NAVAL FACILITIES ENGINEERING COMMAND - MID ATLANTIC
COLTS NECK, NEW JERSEY

FENCE IDIQ CONTRACT

MISCELLANEOUS FENCE AND GATE DETAILS

SCALE:

EPROJECT NO.: –

CONSTR. CONTR. NO. N6472-08-D-2025

NAVFAC DRAWING NO. 12610893

SHEET 12 OF 15

A-521

DRAWFORM REVISION: 10 MARCH 2009

FILE NAME: P:\Temp\AcPublish_4312\N6472080202025-A-01521.dwg LAYOUT NAME: Layout1 PLOTTED: Wednesday, January 11, 2012 - 3:57pm USER: Christian Rojas

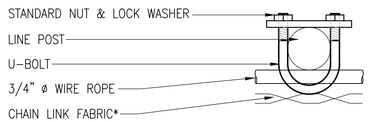

PLAN

SCALE: 3" = 1'-0"

D1 | A-522 | A-522

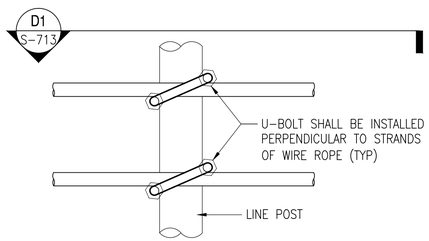

LINE POST DETAIL (CLF ONLY)

SCALE: 3" = 1'-0"

C1 | A-503, A-504 | A-522

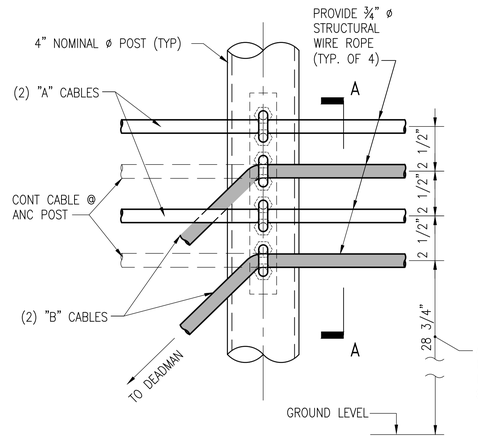

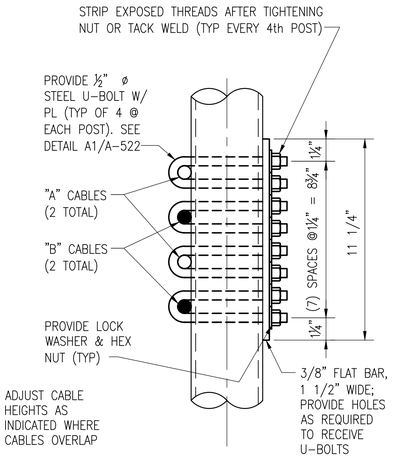

SECTION A – A

CABLE ANCHORAGE DETAIL @ PULL & ANCHOR POST W/ OVERLAPPING CABLES

SCALE: 3"= 1'-0"

C2 | A-503, A-504, A-514 | A-522

NOTE: USE THIS DETAIL FOR ORNAMENTAL LINE POSTS. OPTIONAL REPLACEMENT OF DETAIL C1 THIS SHEET FOR CLF LINE POST.

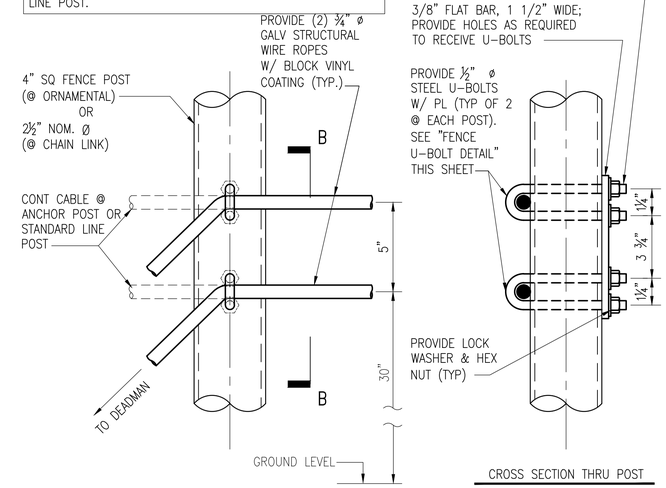

CROSS SECTION THRU POST

CABLE ANCHORAGE DETAIL @ PULL & ANCHOR POST

SCALE: 3" = 1'-0"

C4 | A-504, A-513, A-514 | A-522

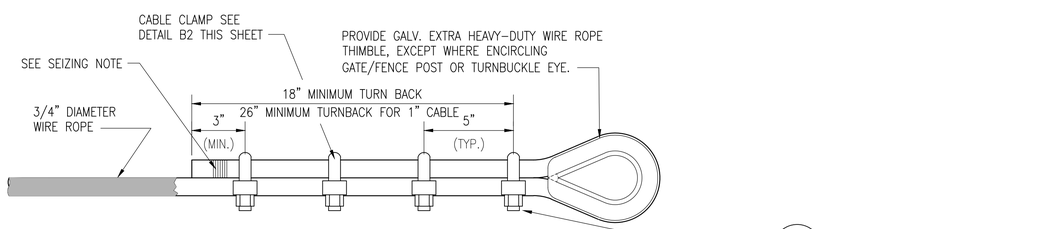

ORNAMENTAL FENCE NOTE: STRIP VINYL COATING OFF WIRE ROPE IN AREA OF CLIPS AND THIMBLE (APPROX. LAST 4'-6").	SEIZING NOTE: WIND SEIZING WIRE IN A TIGHT SPIRAL AROUND THE ROPE END TO A 1" LENGTH OF SEIZING. TWIST THE TWO ENDS OF THE SEIZING WIRE AT THE CENTER OF THE SEIZING LENGTH. USE ZINC COATED STEEL WIRE.
NOTE (ALL FENCE TYPES): INSTALL SADDLE OF CLIPS ON LIVE SIDE (AS SHOWN), SEIZE CUT END OF WIRE ROPE, AND TORQUE NUTS PER MANUFACTURER'S RECOMMENDATIONS (TYP).	

TYPICAL TURNBACK AND CLAMP DETAIL

SCALE: 3" = 1'-0"

B1 | A-503, A-504, A-505, A-513, A-514, A-515 | A-522

CLAMP DETAIL

NOT TO SCALE

B2 | A-522 | A-522

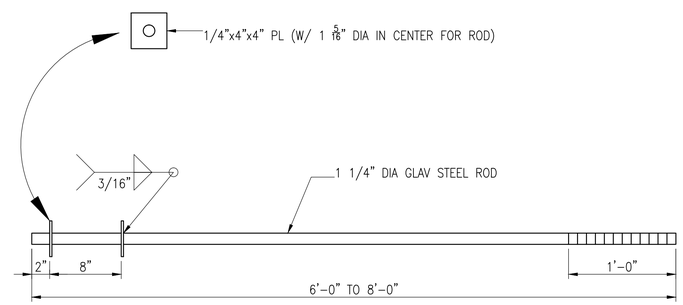

DEADMAN ANCHOR ROD

SCALE: 1 1/2" = 1'-0"

B3 | A-503, A-504 | A-522

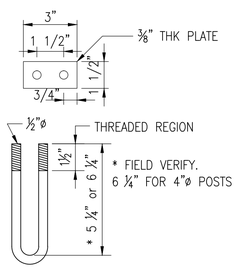

FENCE U-BOLT DETAIL

SCALE: 3" = 1'-0"

A1 | A-522 | A-522

GRAPHIC SCALES

3" = 1'-0"
1 1/2" = 1'-0"
1" = 1'-0"

APPR.	DATE	DESCRIPTION	SYM

NAVFAC

SEAL

DCS INFRASTRUCTURE, LLC
DESIGN & CONSTRUCTION SERVICES
309 FELLOWSHIP ROAD
MT. LAUREL, N.J. 08054 609-351-1486
3249 ROUTE 112
BLDG. A, STE. 1B
MEDFORD, N.Y. 11763 631-320-1706

A/E INFO

APPROVED

FOR COMMANDER NAVFAC

ACTIVITY

FINAL SUBMISSION

SATISFACTORY TO DATE 1/11/2012

DES DRW CHK

<<PM/DM>> –

BRANCH MANAGER –

CHIEF ENG/ARCH –

<<XXX>> –

DEPARTMENT OF THE NAVY
NAVAL FACILITIES ENGINEERING COMMAND
NAVAL WEAPONS STATION EARLE

NAVAL FACILITIES ENGINEERING COMMAND - MID ATLANTIC
COLES NECK, NEW JERSEY

FENCE IDIQ CONTRACT

TYPICAL CABLE REINFORCING DETAILS

SCALE:

EPROJECT NO.: –

CONSTR. CONTR. NO. N6472-08-D-2025

NAVFAC DRAWING NO. 12610894

SHEET 13 OF 15

A-522

DRAWFORM REVISION: 10 MARCH 2009

FILE NAME: P:\104 NWS Earle\104-11-16 Fence IDIQ\Final Submittal\Drawings\N6472080202S-A-D1.522.dwg LAYOUT NAME: Layout1 PLOTTED: Wednesday, January 11, 2012 - 3:55pm USER: Christian Rojas

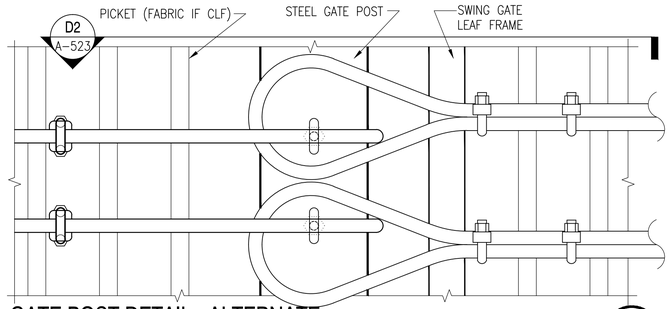

GATE POST DETAIL - ALTERNATE

SCALE: 3" = 1'-0"

D1 A-505, A-515, A-523 | A-523

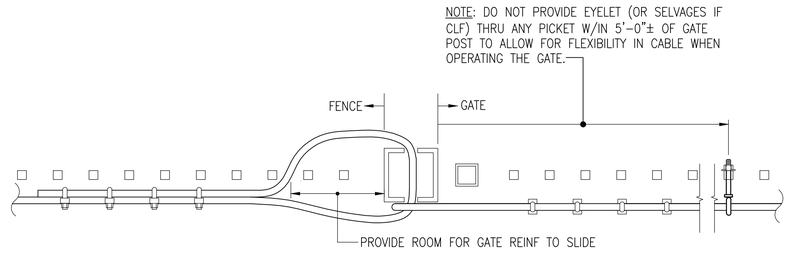

ALTERNATIVE CABLE LASHING - ORNAMENTAL SHOWN (CLF SIMILAR)

SCALE: 1 1/2" = 1'-0"

D2 A-523 | A-523

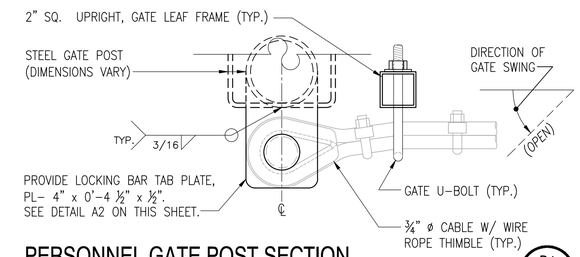

PERSONNEL GATE POST SECTION

SCALE: 3" = 1'-0"

D4 A-523 | A-523

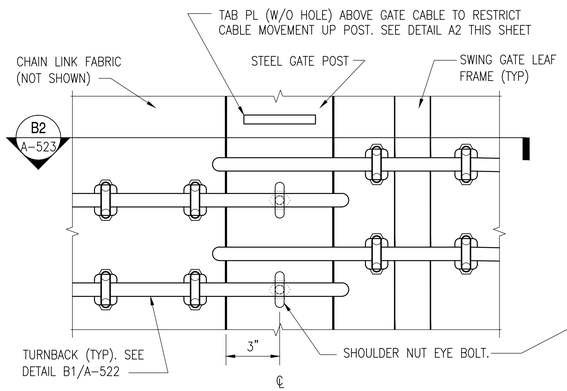

GATE POST DETAIL

SCALE: 3" = 1'-0"

B1 A-505, A-515 | A-523

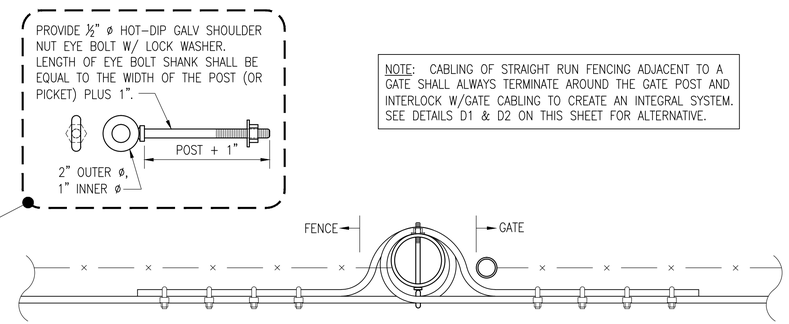

NOTE: CABLING OF STRAIGHT RUN FENCING ADJACENT TO A GATE SHALL ALWAYS TERMINATE AROUND THE GATE POST AND INTERLOCK W/GATE CABLING TO CREATE AN INTEGRAL SYSTEM. SEE DETAILS D1 & D2 ON THIS SHEET FOR ALTERNATIVE.

SECTION

SCALE: 1 1/2" = 1'-0"

B2 A-523 | A-523

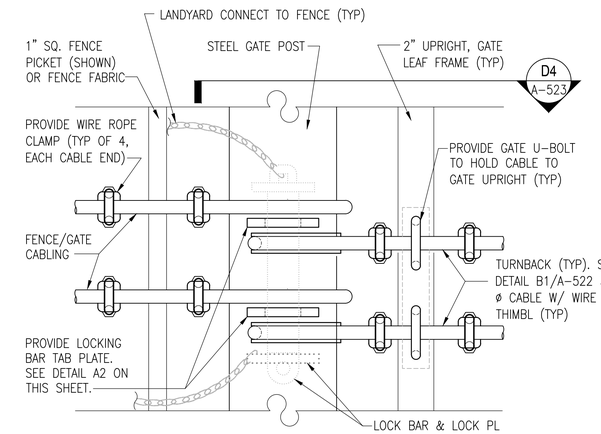

PERSONNEL GATE POST DETAIL (TYP.)

SCALE: 3" = 1'-0"

B4 A-505, A-515 | A-523

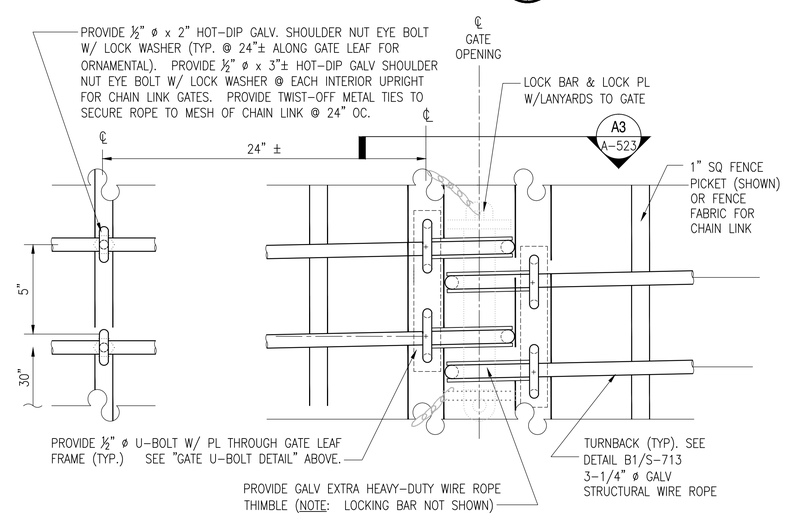

DOUBLE GATE LEAF LOCK DETAIL

SCALE: 3" = 1'-0"

A1 A-505, A-515 | A-523

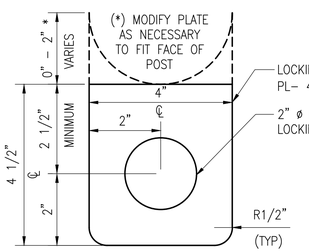

NOTE: POSTS THAT ARE TO RECEIVE LOCKING BAR TAB PLATES WILL NOT REQUIRE SHOULDER NUT EYE BOLTS, AS FENCE/GATE CABLING (STRUCTURAL WIRE ROPE W/ BLACK VINYL COATING) WILL REST ON PLATES TO KEEP FROM SAGGING OR SLIPPING.

LOCKING BAR TAB PLATE DETAIL

SCALE: 6" = 1'-0"

A2 A-523 | A-523

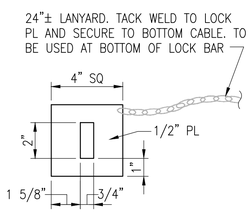

LOCK PLATE

SCALE: 3" = 1'-0"

A4 A-523 | A-523

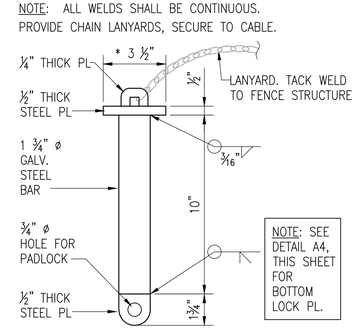

LOCK BAR DETAIL

SCALE: 3" = 1'-0"

A5 A-523 | A-523

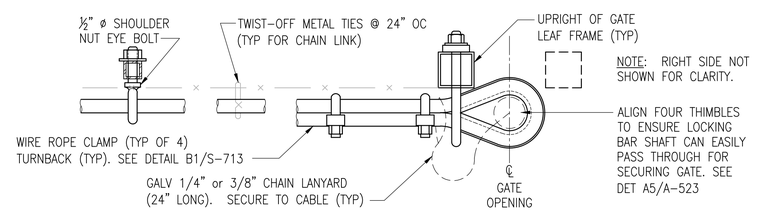

SECTION

SCALE: 3" = 1'-0"

A3 A-523 | A-523

GRAPHIC SCALES

3" = 1'-0"

1 1/2" = 1'-0"

APPR	DATE	DESCRIPTION	SYM

NAVFAC

SEAL

DCS INFRASTRUCTURE, LLC
DESIGN & CONSTRUCTION SERVICES
309 FELLOWSHIP ROAD, MT. LAUREL, N.J. 08054 — 609-351-1486
3249 ROUTE 112, BLDG. A, STE. 1B, MEDFORD, N.Y. 11763 — 631-920-1706

A/E INFO

APPROVED

FOR COMMANDER NAVFAC

ACTIVITY: FINAL SUBMISSION

SATISFACTORY TO DATE 1/11/2012

DES	DRW	CHK
<<PM/DM>>		–
BRANCH MANAGER		–
CHIEF ENG/ARCH		–
<<XXX>>		–

DEPARTMENT OF THE NAVY
NAVAL FACILITIES ENGINEERING COMMAND
NAVAL WEAPONS STATION EARLE

NAVAL FACILITIES ENGINEERING COMMAND - MID ATLANTIC
COLTS NECK, NEW JERSEY

FENCE IDIQ CONTRACT

TYPICAL CABLE REINFORCING DETAILS

SCALE:

EPROJECT NO.: –

CONSTR. CONTR. NO. N6472-08-D-2025

NAVFAC DRAWING NO. 12610895

SHEET 14 OF 15

A-523

DRAWFORM REVISION: 10 MARCH 2009

FILE NAME: P:\Temp\AcPublish_4312\N6472080202S-A-01-523.dwg LAYOUT NAME: Layout1 PLOTTED: Wednesday, January 11, 2012 - 3:45pm USER: Christian Rojas

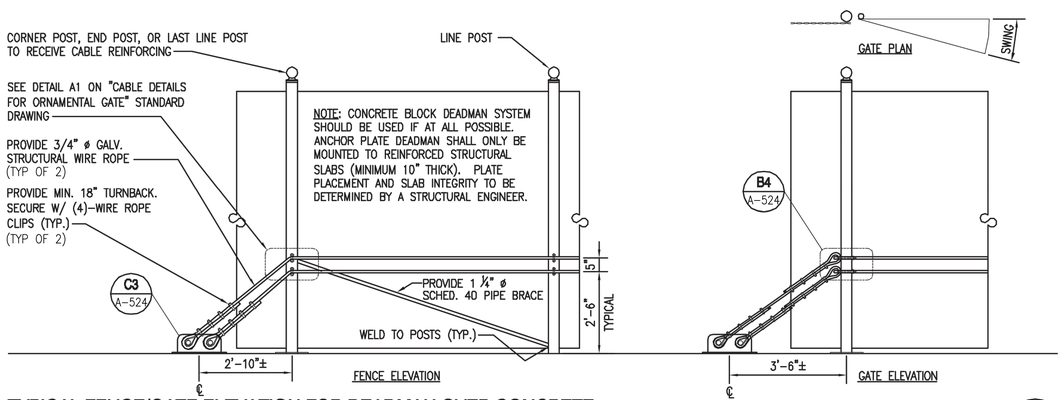

TYPICAL FENCE/GATE ELEVATION FOR DEADMAN OVER CONCRETE

SCALE: 1/2" = 1'-0"

C1 / A-524

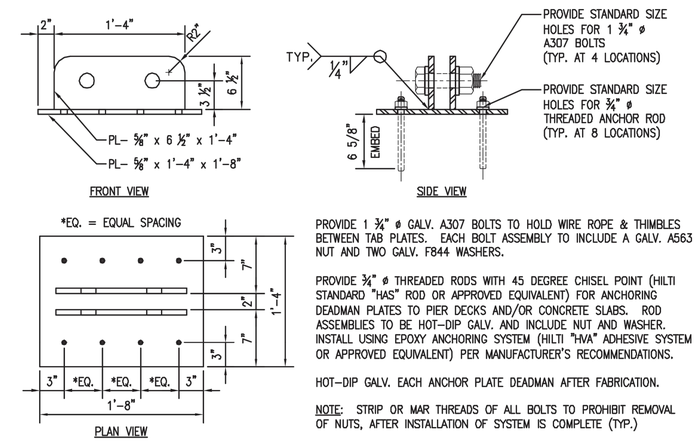

PROVIDE 1 3/4" ø GALV. A307 BOLTS TO HOLD WIRE ROPE & THIMBLES BETWEEN TAB PLATES. EACH BOLT ASSEMBLY TO INCLUDE A GALV. A563 NUT AND TWO GALV. F844 WASHERS.

PROVIDE 3/4" ø THREADED RODS WITH 45 DEGREE CHISEL POINT (HILTI STANDARD "HAS" ROD OR APPROVED EQUIVALENT) FOR ANCHORING DEADMAN PLATES TO PIER DECKS AND/OR CONCRETE SLABS. ROD ASSEMBLIES TO BE HOT-DIP GALV. AND INCLUDE NUT AND WASHER. INSTALL USING EPOXY ANCHORING SYSTEM (HILTI "HVA" ADHESIVE SYSTEM OR APPROVED EQUIVALENT) PER MANUFACTURER'S RECOMMENDATIONS.

HOT-DIP GALV. EACH ANCHOR PLATE DEADMAN AFTER FABRICATION.

NOTE: STRIP OR MAR THREADS OF ALL BOLTS TO PROHIBIT REMOVAL OF NUTS, AFTER INSTALLATION OF SYSTEM IS COMPLETE (TYP.)

ANCHOR PLATE DEADMAN ~ DETAIL

SCALE: 1-1/2" = 1'-0"

C3 / A-524

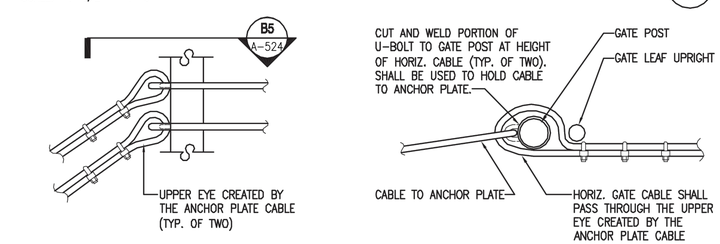

DETAIL

SCALE: 1-1/2" = 1'-0"

B4 / A-524

SECTION

SCALE: 1-1/2" = 1'-0"

B5 / A-524

GRAPHIC SCALES

3" = 1'-0" (0, 1", 2", 3", 4", 5", 6", 1')

1 1/2" = 1'-0" (0, 4", 8", 1'-4")

SYM	DESCRIPTION	DATE	APPR

NAVFAC

SEAL

DCS INFRASTRUCTURE, LLC
DESIGN & CONSTRUCTION SERVICES
309 FELLOWSHIP ROAD, MT. LAUREL, N.J. 08054 — 609-351-1486
3249 ROUTE 112, BLDG. A, STE. 1B, MEDFORD, N.Y. 11763 — 631-320-1706

A/E INFO

APPROVED

FOR COMMANDER NAVFAC

ACTIVITY: FINAL SUBMISSION

SATISFACTORY TO — DATE: 1/11/2012

DES	DRW	CHK
<<PM/DM>>		–
BRANCH MANAGER		–
CHIEF ENG/ARCH		–
<<XXX>>		–

DEPARTMENT OF THE NAVY
NAVAL FACILITIES ENGINEERING COMMAND
NAVAL WEAPONS STATION EARLE

NAVAL FACILITIES ENGINEERING COMMAND - MID ATLANTIC
COLTS NECK, NEW JERSEY

FENCE IDIQ CONTRACT

TYPICAL CABLE REINFORCING DETAILS

SCALE:

EPROJECT NO.: –

CONSTR. CONTR. NO. N6472-08-D-2025

NAVFAC DRAWING NO. 12610896

SHEET 15 OF 15

A-524

DRAWFORM REVISION: 10 MARCH 2009

FILE NAME: P:\104 NWS Earle\104-11-16 Fence IDIQ\Final Submittal\Drawings\N6472080202S-A-07.524.dwg LAYOUT NAME: Layout1 PLOTTED: Wednesday, January 11, 2012 - 3:45pm USER: Christian Rojas