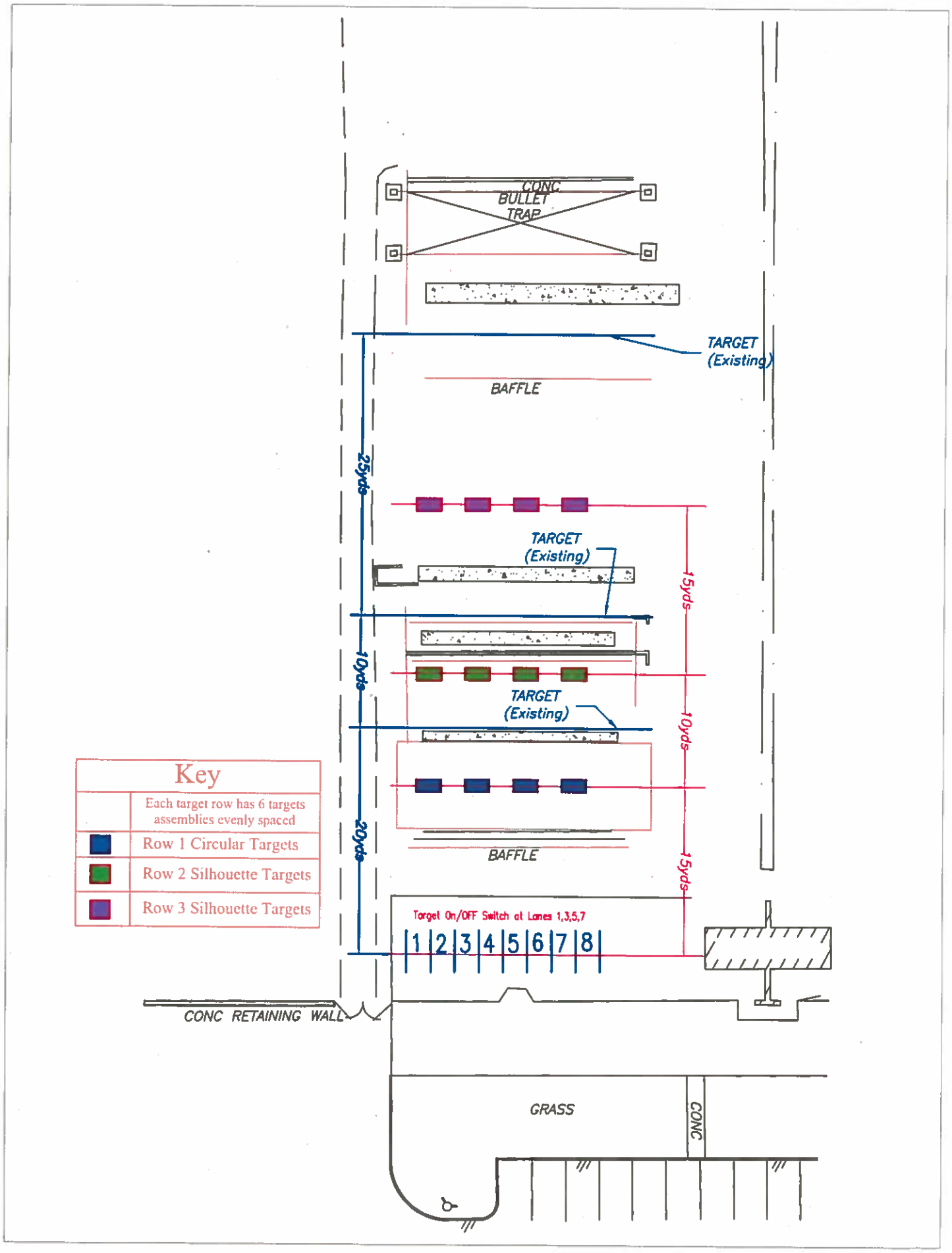
CONC
BULLET
TRAP
TARGET
(Existing)
BAFFLE
25yds
TARGET
(Existing)
15yds
10yds
TARGET
(Existing)
10yds
20yds
BAFFLE
15yds
Key
Each target row has 6 targets assemblies evenly spaced
Row 1 Circular Targets
Row 2 Silhouette Targets
Row 3 Silhouette Targets
Target On/OFF Switch at Lanes 1,3,5,7
1 2 3 4 5 6 7 8
CONC RETAINING WALL
GRASS
CONC

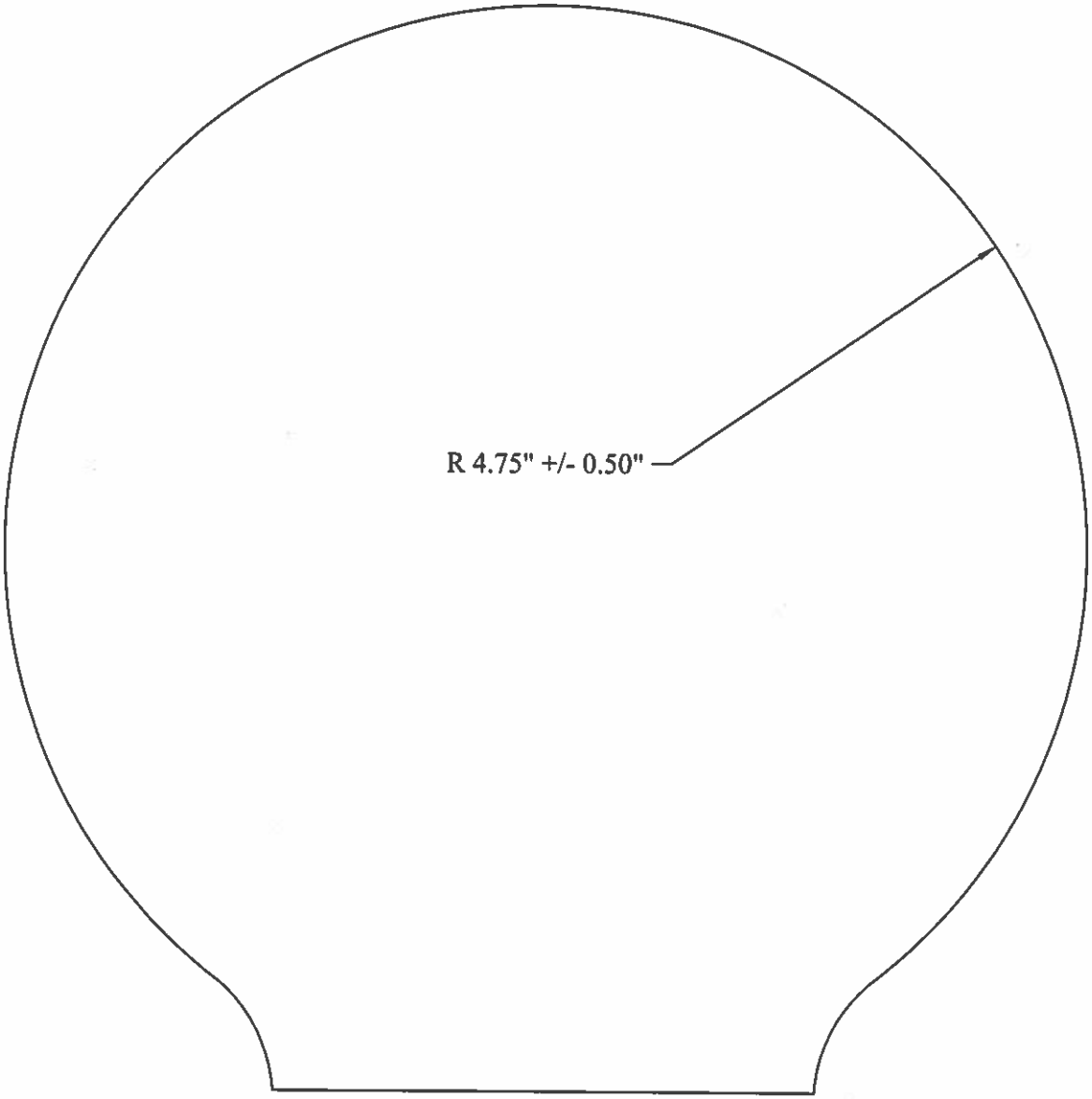

Row 1 Circular Target

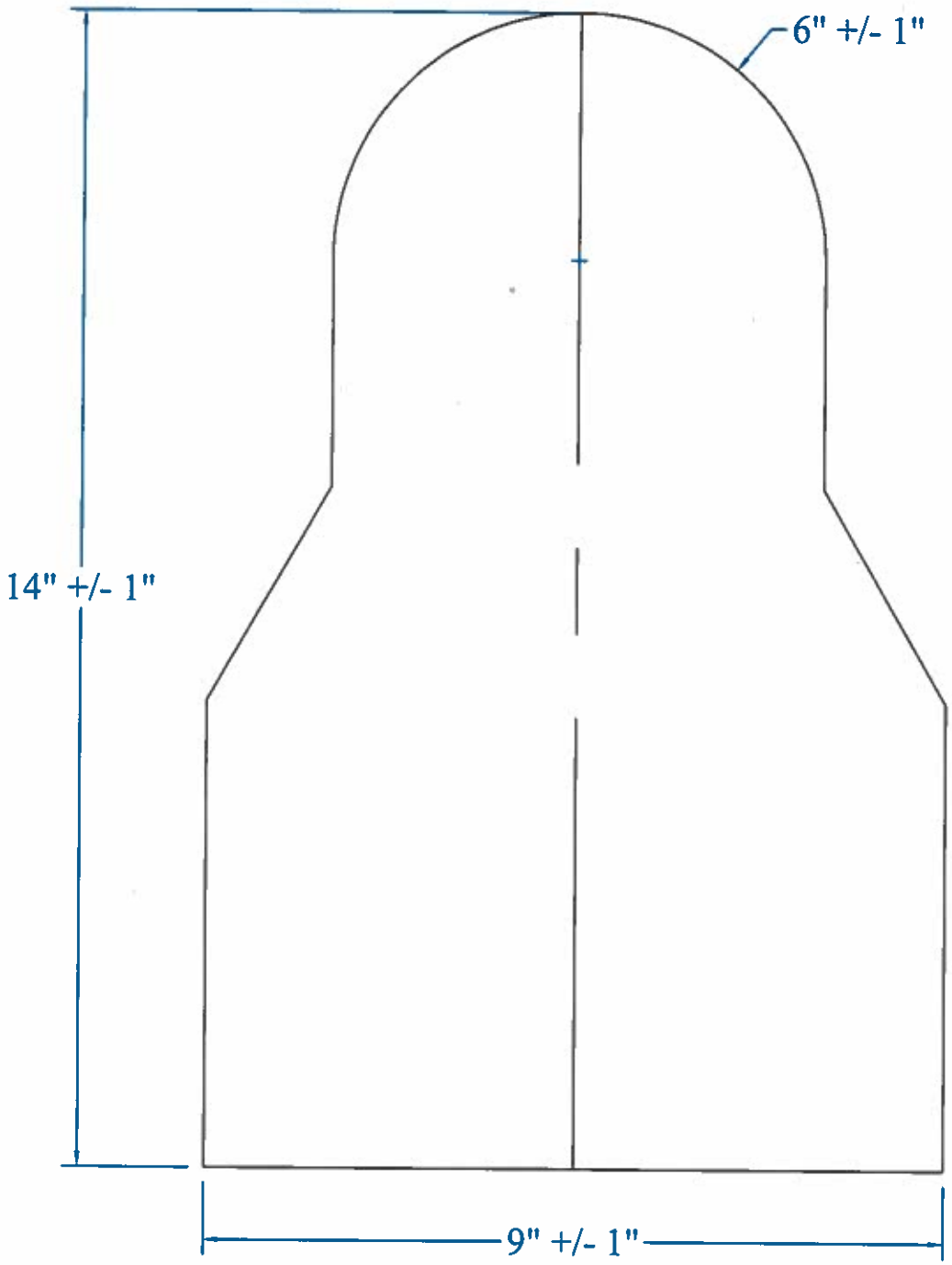

Row 2 Silhouette Target

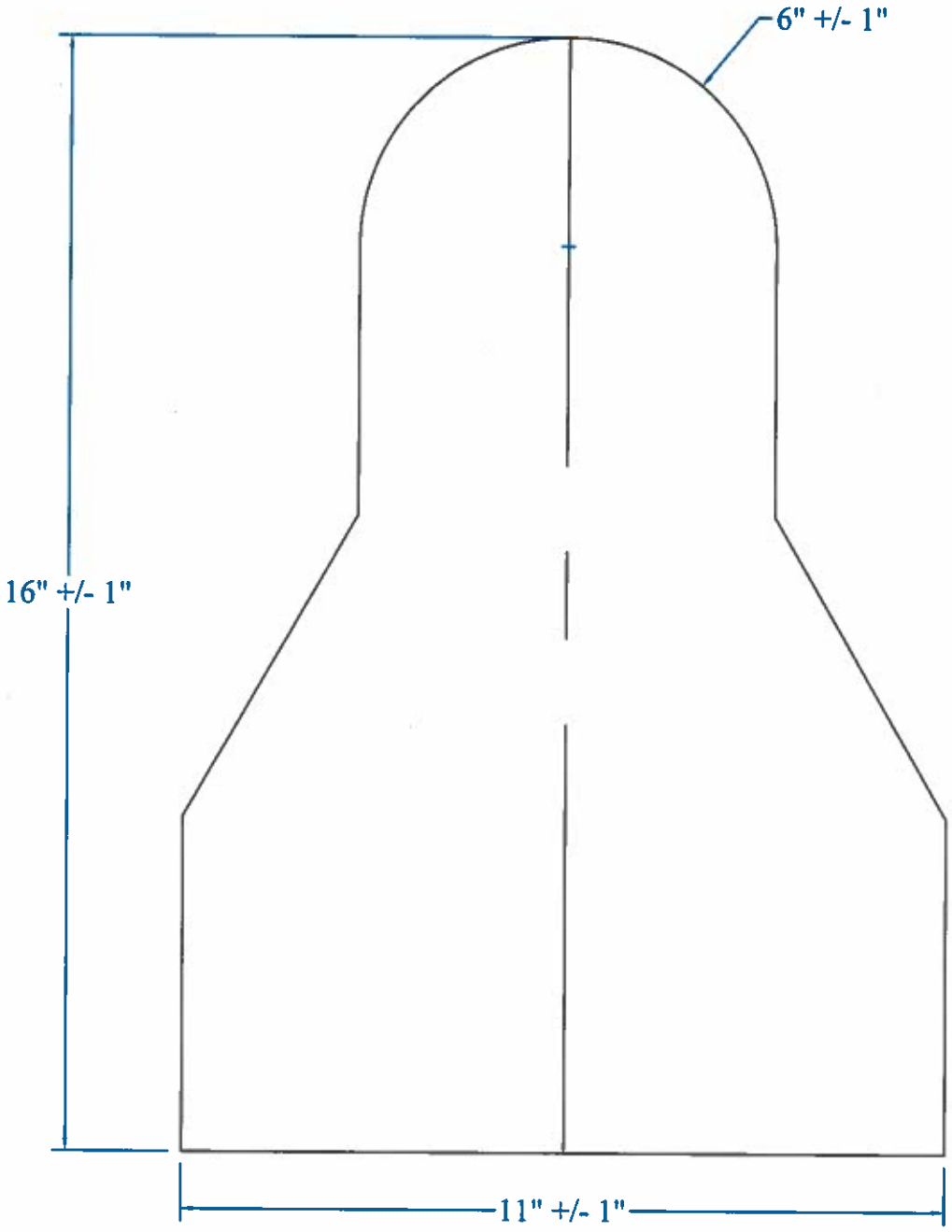

Row 3 Silhouette Target