PARTS LIST

ITEM	QTY	DESCRIPTION	MATERIAL	SPEC/PART NO	REMARKS
1	2	MAIN SEAL O-RING #1, 3/8" SECTION	BUNA-N RUBBER	AMS 7272	70 DUROMETER, BLACK
2	2	MAIN SEAL O-RING #2, 3/8" SECTION	FLOUROCARBON RUBBER	AMS 3216	75 DUROMETER, BLACK
3	2	SLEEVE TEST SEAL O-RING #1, 1/4" NOM SECTION	BUNA-N RUBBER	AMS 7272	70 DUROMETER, BLACK
4	2	SLEEVE TEST SEAL O-RING #2, 1/4" NOMINAL SECTION	FLOUROCARBON RUBBER	AMS 3216	75 DUROMETER, BLACK
5	2	FACE TEST SEAL O-RING #1, 1/4" NOMINAL SECTION	BUNA-N RUBBER	AMS 7272	70 DUROMETER, BLACK
6	2	FACE TEST SEAL O-RING #2, 1/4" NOMINAL SECTION	FLOUROCARBON RUBBER	AMS 3216	75 DUROMETER, BLACK

* QUANTITIES SHOWN ARE MINIMUM. ADDITIONAL QUANTITIES MAY BE SPECIFIED BY THE BUYER.

FOR OFFICIAL USE ONLY

DISTRIBUTION STATEMENT C: DISTRIBUTION AUTHORIZED TO U.S. GOVERNMENT AGENCIES AND THEIR CONTRACTORS, ADMINISTRATIVE AND OPERATIONAL USE (JAN 2014). OTHER REQUESTS FOR THIS DOCUMENT SHALL BE REFERRED TO NAVSEA 05P3.

DESTRUCTION NOTICE: DESTROY BY ANY METHOD THAT WILL PREVENT DISCLOSURE OF CONTENTS OR RECONSTRUCTION OF THE DOCUMENT.

STANDARD TOLERANCES
ALL DIMENSIONS ARE INCHES.
TOL PER ASME Y14.5 - 1994.

X.X ±.060
X.XX ±.020
X.XXX ±.005
ANGLES ±0.5°

FINISH 63 Ra PER ASME Y14.36
SHARP FILLETS R.020 MAX.
ABBREV PER ASME Y14.38.
THREADS PER ASME B1.1

DRAWN M. Koehler	4/30/2015	PROPULSOR TECHNOLOGY INC.
CHECKED		TITLE DEMO HUB FWD O-RINGS FOR ASSY PB12051
ENGINEER		
NAVSEA		SIZE B / SWBS / DWG NUMBER PB15001 / REV -
		SCALE 1/10 / SHEET 1 OF 5

NOTES

1. THE PURPOSE OF THIS DRAWING IS TO PROVIDE REQUIREMENTS FOR O-RINGS SUITABLE FOR SEAL TESTING OF THE "OR DEMO HUB" (DWG PB12051).

2. O-RINGS SHALL BE PRODUCED BY MOLDING A CONTINUOUS TOROIDAL SHAPE; SPLICING IS NOT PERMITTED. O-RINGS SHALL BE OF UNIFORM CROSS-SECTION AND FREE OF KINKS, GOUGES, CUTS, PITS, FOREIGN INCLUSIONS, AND ROUGH SURFACES.

3. PRESERVATION: EACH O-RING SHALL BE INDIVIDUALLY SEALED IN AN AIRTIGHT PLASTIC BAG. THE BAG SHALL HAVE MARKINGS TO IDENTIFY THE O-RING MATERIAL, INSIDE DIAMETER, AND SECTION SIZE.

4. A CERTIFICATE OF CONFORMANCE IS REQUIRED FOR ACCEPTANCE AND SHALL INCLUDE ALL MATERIAL CERTIFICATIONS AND RESULTS OF DIMENSIONAL INSPECTION.

5. PACKAGING: ALL O-RINGS IN AN ORDER MAY BE SHIPPED TOGETHER IN A HEAVY DUTY CARDBOARD BOX EQUAL TO ULINE.COM PN S-18170. FILL PACKING SHALL BE USED TO PREVENT EXCESSIVE MOVEMENT DURING SHIPPING. ENSURE THAT O-RINGS ARE NOT KINKED DURING PACKING.

SIZE	SWBS	DWG NUMBER	REV
B		PB15001	-
SCALE		SHEET 2 OF 5	

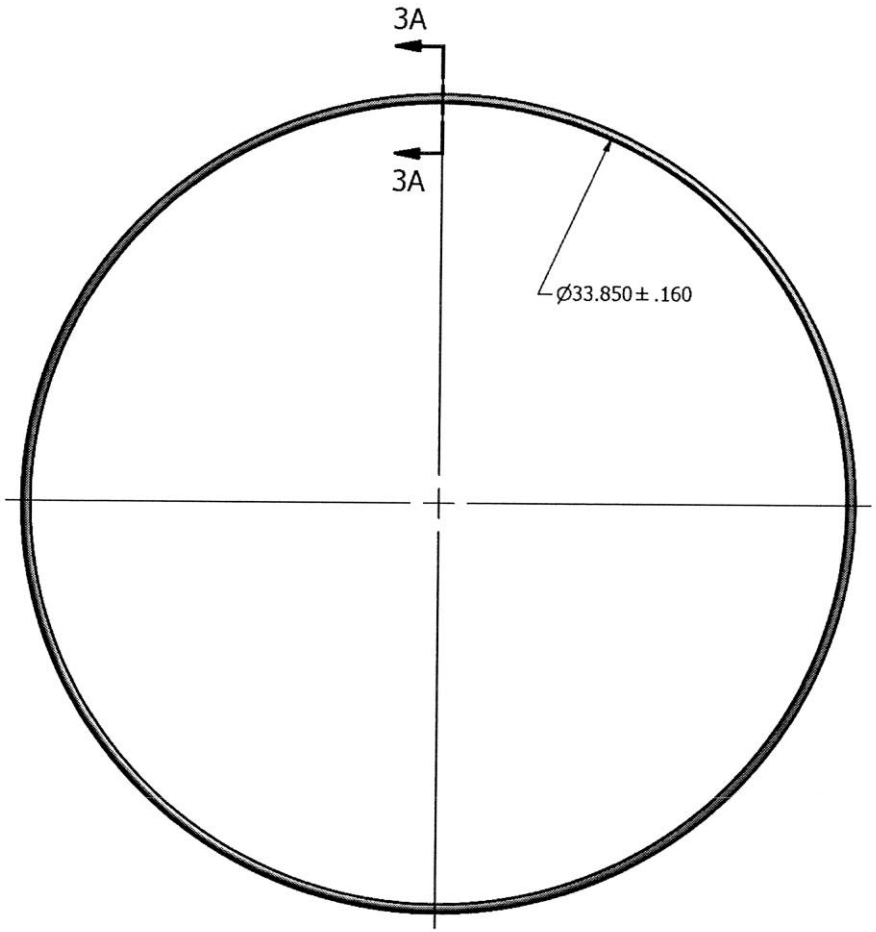

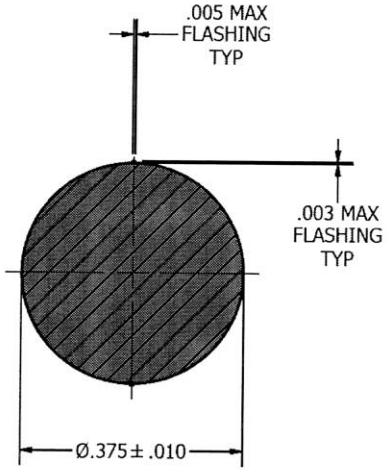

SECTION 3A-3A
SCALE 5 : 1

MAIN SEAL O-RING, ITEM 1 OR 2

INSIDE DIAMETER SHALL BE INSPECTED BY FITTING THE
O-RING OVER RIGID CYLINDRICAL GO AND NO-GO GAGES

SIZE	SWBS	DWG NUMBER	REV
B		PB15001	-
SCALE NONE		SHEET 3 OF 5	

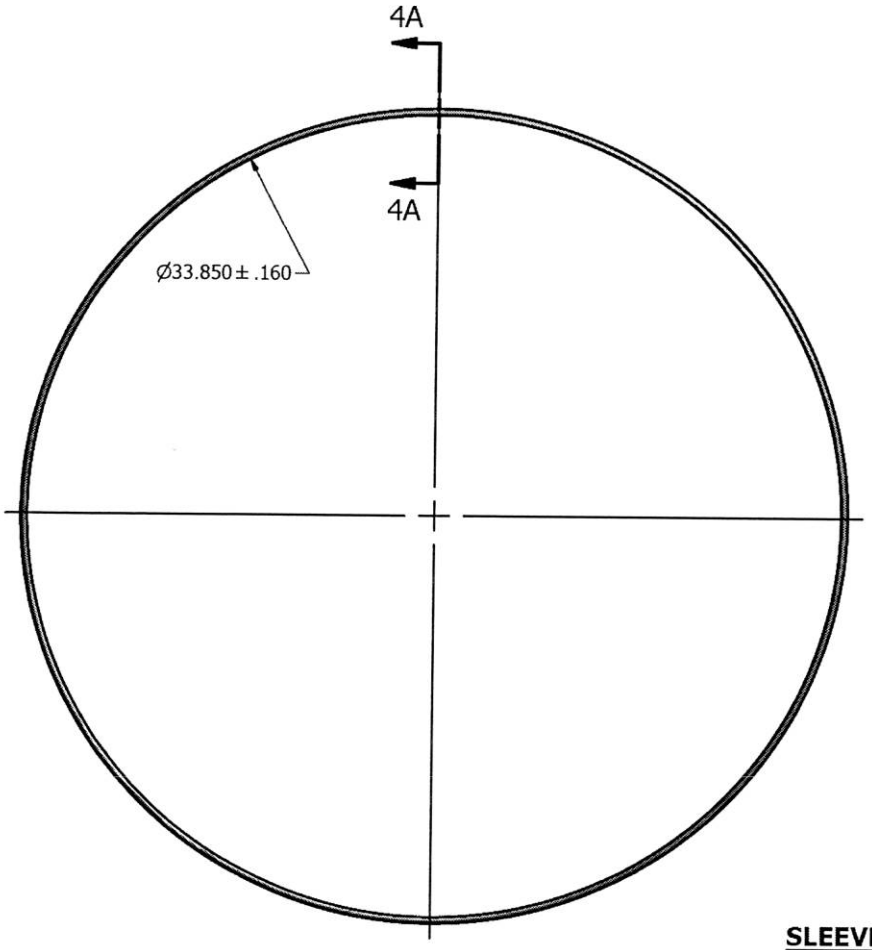

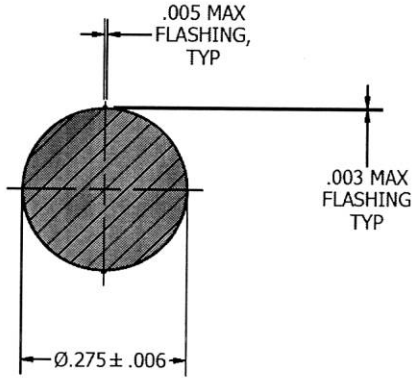

SECTION 4A-4A
SCALE 5 : 1

SLEEVE TEST O-RING, ITEM 3 OR 4

INSIDE DIAMETER SHALL BE INSPECTED BY FITTING THE
O-RING OVER RIGID CYLINDRICAL GO AND NO-GO GAGES

SIZE	SWBS	DWG NUMBER	REV
B		PB15001	-
SCALE NONE		SHEET 4 OF 5	

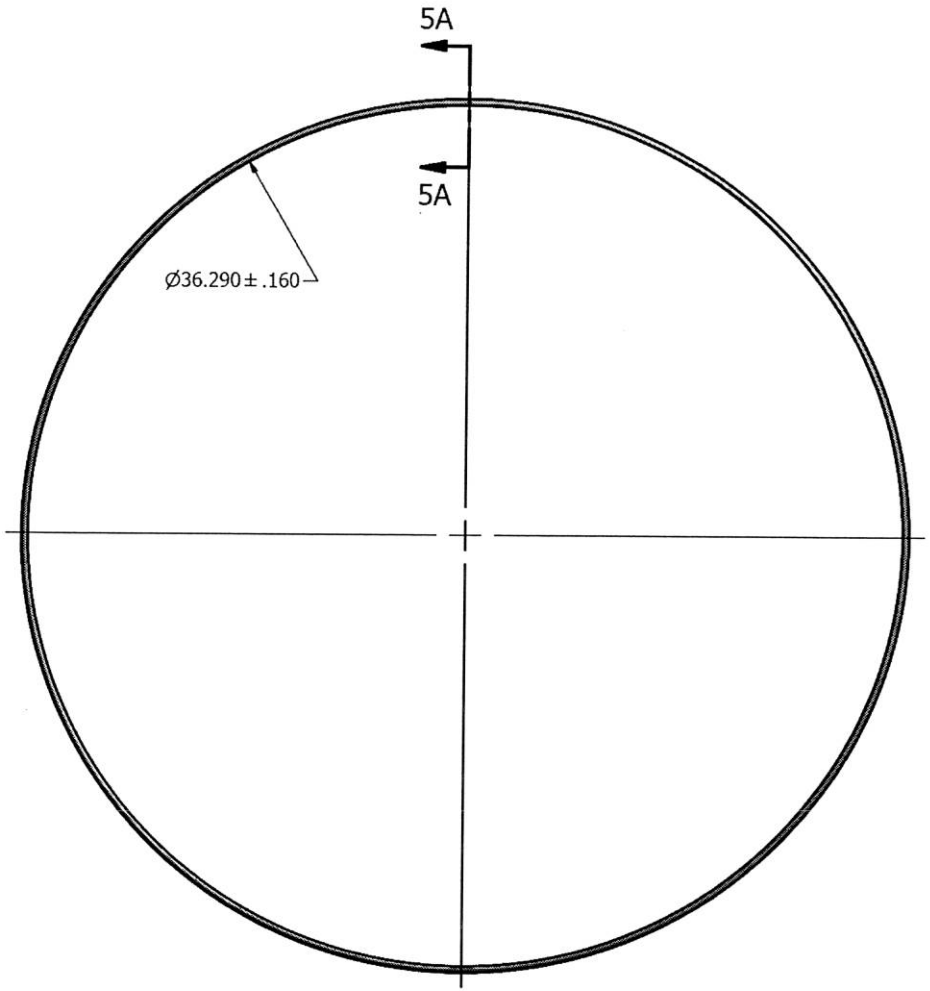

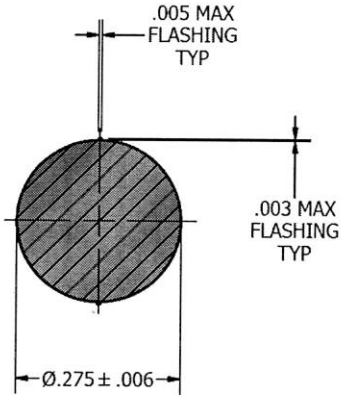

SECTION 5A-5A
SCALE 5 : 1

FACE TEST O-RING, ITEM 5 OR 6

INSIDE DIAMETER SHALL BE INSPECTED BY FITTING THE O-RING OVER RIGID CYLINDRICAL GO AND NO-GO GAGES

SIZE	SWBS	DWG NUMBER	REV
B		PB15001	-
SCALE NONE		SHEET 5 OF 5	