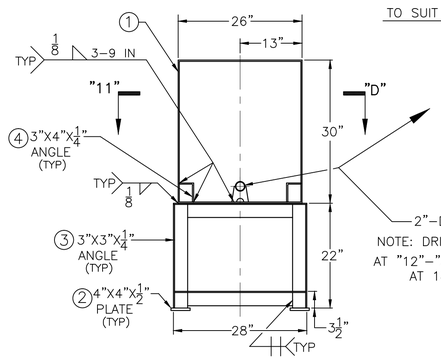


FOUNDATION LEGS SECTION "15-E"

SCALE: 1"=1'-0"

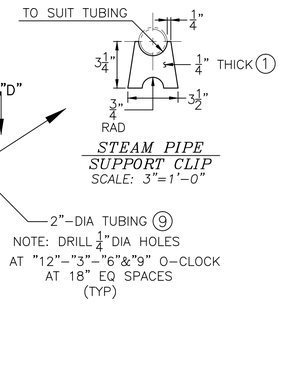


STEAM PIPE SUPPORT CLIP

SCALE: 3"=1'-0"

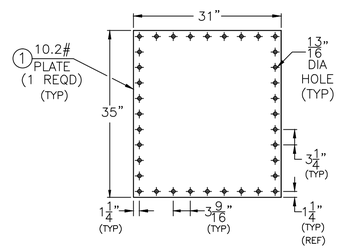


BLANK SECTION "15-C"

SCALE: 1"=1'-0"

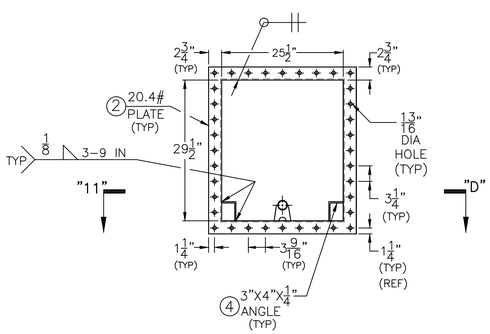


FLANGE SECTION "15-A"

SCALE: 1"=1'-0"

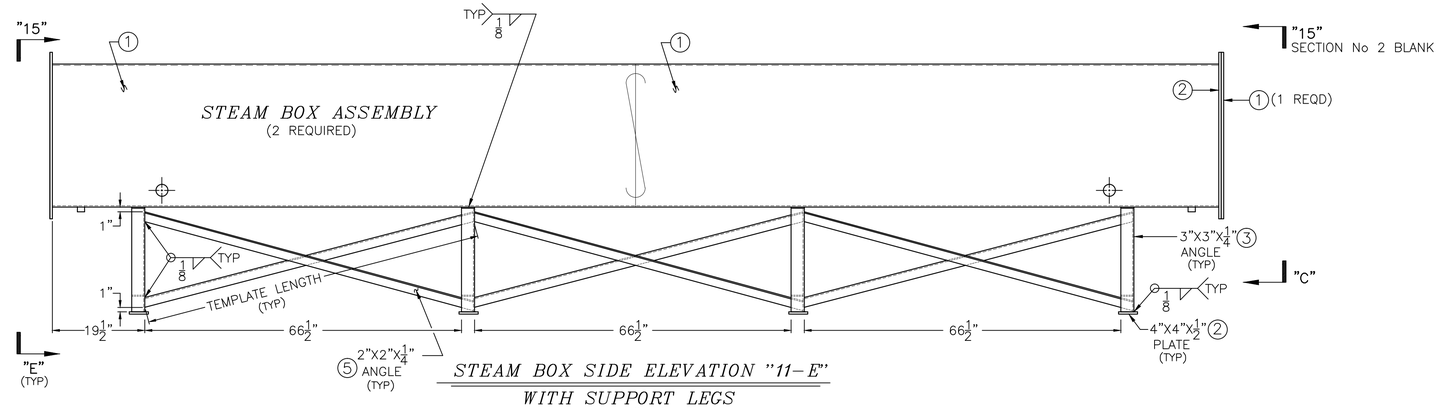


STEAM BOX SIDE ELEVATION "11-E"

WITH SUPPORT LEGS

SCALE: 1"=1'-0"

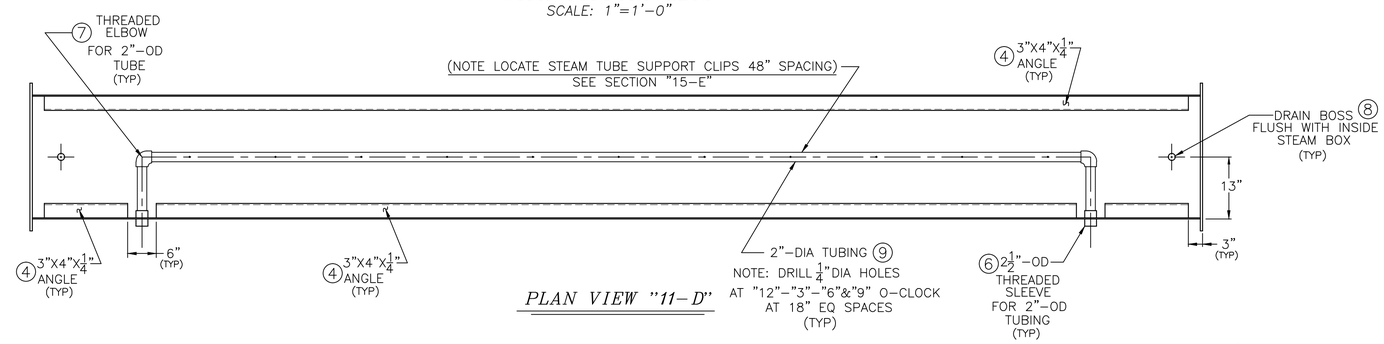


PLAN VIEW "11-D"

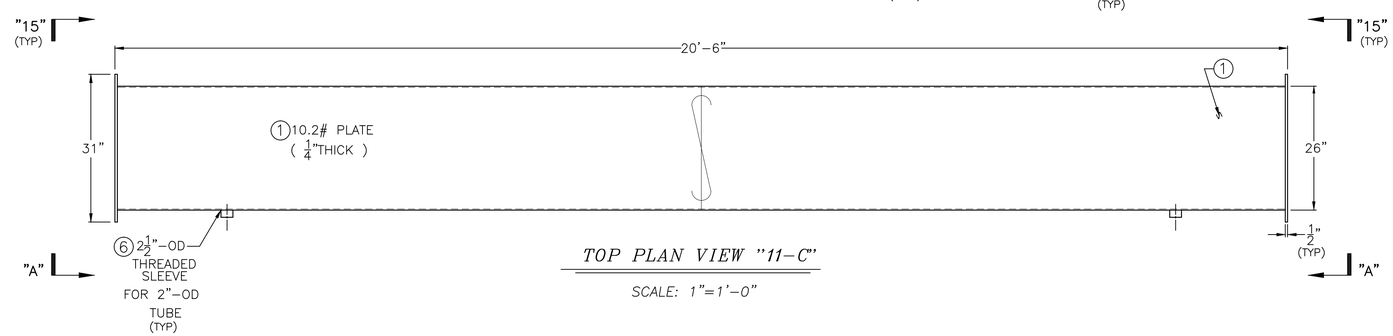


TOP PLAN VIEW "11-C"

SCALE: 1"=1'-0"

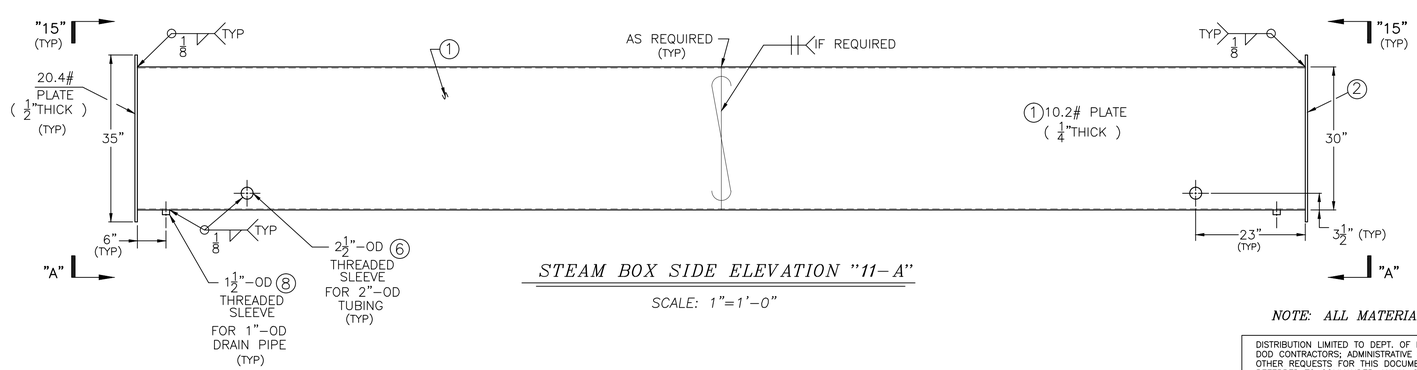


STEAM BOX SIDE ELEVATION "11-A"

SCALE: 1"=1'-0"

NOTE: ALL MATERIAL IS STEEL

DISTRIBUTION LIMITED TO DEPT. OF DEFENSE AND U.S. DOD CONTRACTORS; ADMINISTRATIVE OR OPERATIONAL USE. OTHER REQUESTS FOR THIS DOCUMENT SHALL BE REFERRED TO COMMANDER, NAVAL SEA SYSTEMS COMMAND (SEA 09B2), WASHINGTON, D.C. 20362-5101.

| SIZE | N.H.H.C. DET BOSTON DRAWING NO. | REV |
|---|---|---|
| F | 032-04-2016 | – |
| SCALE: AS NOTED | | SHEET 2 |