804-5959312 REV B, SH. 1

(*) GENERAL NOTES

1. BERTH ASSEMBLIES SHALL BE MANUFACTURED FREE FROM SLIVERS, BURRS, SHARP EDGES, WHICH MAY INJURE PERSONNEL ENGAGED IN THE HANDLING, PACKAGING, AND/OR ERECTION OF SUBASSEMBLIES AND/OR COMPONENTS THAT FORM EACH BERTH UNIT.

A 2. MANDATORY REQUIREMENTS ARE NOTED WITH AN ASTERISK (*) THROUGHOUT THIS DRAWING. ALL DIMENSIONS WITH TOLERANCES ARE MANDATORY IN ORDER TO SUIT SUBASSEMBLY AND/OR PIECE ITEM REPAIR/REPLACEMENT PART REQUIREMENT. PRIOR TO THE PRODUCTION OF THE SUBASSEMBLY AND/OR PIECE ITEM, DESIGN DEVIATIONS SHALL BE REQUESTED FROM NAVAL SURFACE WARFARE CENTER, CARDEROCK DIVISION, CODE 9740, PHILADELPHIA, PA PROVIDED THAT THE MATERIAL COMPOSITION IS MAINTAINED AND THE FUNCTION, STRENGTH AND REPAIRABLE PARTS REQUIREMENTS ARE NOT IMPAIRED.

3. BERTH SUBBASES SHALL BE INSTALLED PARALLEL TO BASE LINE OF SHIP. WHERE BERTH UNITS ADJOIN ONE ANOTHER, THEY SHALL BE FASTENED TOGETHER TO PREVENT VIBRATION AND RATTLING.

4. SINCE THE HEAD/FOOT BOARD FRAME ASSEMBLY, DETAIL 35–A, SHEET 5, FUNCTIONS AS EITHER A HEADBOARD OR A FOOTBOARD, THE INSTALLATION LOCATION OF THE VARIOUS ARTICLES OF BERTH OUTFITTING DETERMINES ITS FUNCTION FOR A BERTH UNIT.

5. WHERE BACK OF THE BERTH IS ADJACENT TO BULKHEAD OR SHELL THE BACK PANELS MAY BE OMITTED FOR WEIGHT REDUCTION AND/OR ACCESS BEHIND THE BERTH. WHERE BACK PANELS ARE OMITTED, THE BERTH ASSEMBLY SHALL BE ATTACHED TO THE BULKHEAD BY THE USE OF CLIPS OR WHERE SUCH ATTACHMENT IS IMPRACTICAL, CROSS BRACING SHALL BE INSTALLED. A GRAB BAR, PC 63, SHALL ALSO BE INSTALLED AT THE BACK BETWEEN HEAD AND FOOTBOARD. THE OPEN BACK AREA MAY BE FITTED WITH CURTAINS FOR AESTHETICS OR BLOCK–OUT LIGHT.

6. THE BACK PANELS ON ONE BERTH ASSEMBLY MAY BE OMITTED FOR WEIGHT REDUCTION CONCERNS WHENEVER BACK TO BACK BERTH INSTALLATIONS OCCUR BUT THE LOWER BACK PANEL MUST BE OMITTED ON THE BERTH ASSEMBLY THAT BACKS THE BERTH ASSEMBLY WITH A KICK–OUT ESCAPE PANEL.

7. INSERT PANELS, PC 50, SHALL BE FACTORY INSTALLED IN HEAD/FOOT BOARD FRAME ASSEMBLIES. WHERE THE HEAD AND OR FOOT OF A BERTH ASSEMBLY IS LOCATED ADJACENT TO A BULKHEAD OR THE END OF ANOTHER BERTH, THE INSERT PANELS, PC 50, OF THAT ASSEMBLY MAY BE OMITTED FOR WEIGHT REDUCTION OR ACCESS.

A 8. THROUGHOUT THIS DRAWING WHEREVER DUAL DIMENSIONS ARE SHOWN FOR HEIGHTS OF VARIOUS COMPONENTS, THESE DIMENSIONS PROVIDE CLEAR HEIGHTS OF 18 OR 20 INCHES FOR CREW BERTHS AND 20 OR 23 INCHES FOR CPO BERTHS ABOVE THE TOP OF THE NEOPRENE FOAM (SYNTHETIC CELLULAR RUBBER) MATTRESS. SEE NOTES 52 AND 53 FOR DIMENSIONS FOR CLEAR HEIGHTS ABOVE THE TOP OF INNERSPRING MATTRESSES. PROCURING ACTIVITY SHALL SPECIFY HEIGHT REQUIRED.

NOTE: AS A RESULT OF THE GREATER THICKNESS OF THE INNERSPRING MATTRESS (REF 4), CLEAR HEIGHTS ON EXISTING SHIPS ARE REDUCED TO APPROXIMATELY 16.5 OR 18.5 INCHES FOR CREW BERTHS AND 18.5 OR 21.5 FOR CPO BERTHS. IT IS ACKNOWLEDGED THAT ON EXISTING SHIPS, THE MINIMUM STANDARD FOR CLEAR HEIGHT ABOVE THE MATTRESS WILL NOT BE MET WITH THE INNERSPRING MATTRESS SINCE DECK HEIGHTS, OVERHEAD OBSTRUCTIONS AND DECK AREA ALLOCATIONS ARE FOR THE MOST PART FIXED. HOWEVER, EMPHASIS SHOULD BE PLACED ON MAXIMIZING CLEAR HEIGHT ABOVE THE MATTRESS AS MUCH AS PRACTICABLE WHEN BERTH UNITS ARE REPLACED.

9. BERTH SIZES NOTED THROUGHOUT THE DRAWING ARE RELATIVE TO MATTRESS SIZED IN INCHES AS LISTED BELOW:

BERTH LENGTH SIZE	MATTRESS SIZE	NEOPRENE		INNERSPRING	
		TYPE /SIZE	NSN	SIZE	NSN
1 (CREW)	26 X 72–1/2	I/1	7210–00–290–8297	1	7210–01–498–0273
2 (CREW)	26 X 76	I/2	7210–00–052–7327	2	7210–01–498–0279
3 (CREW)	26 X 80	I/3	7210–01–244–9734	3	7210–01–498–0280
4 (CPO)	28 X 76	II/1	7210–00–290–8298	4	7210–01–498–0281
5 (CPO)	28 X 80	II/2	7210–01–244–9735	5	7210–01–498–0282

10. HINGE, PC 14, SHALL BE 1–1/2 INCH OPEN WIDTH CONTINUOUS HINGE WITH .050 INCH THICK ALUMINUM LEAVES AND 1/8 INCH DIAMETER CRES PIN.

11. STOP PIN, PC 27, TO BE SPRING PIN 3/16 DIA BY 1–3/4 LONG. PIN SHALL FIT SECURELY THROUGH PROP TUBE & PROP TIP, PC 24 & 26, TO ACT AS A CENTERING GUIDE IN PROP TROUGH.

12. COMBINATION LOCK, PC 31, SHALL BE MODEL SME PUSHBUTTON LOCK AS MFD BY SIMPLEX SECURITY SYSTEMS, INC., COLLINSVILLE CT., OR EQ.

13. DOOR BUMPER, PC 32, TO BE SIMILAR TO PC 29, REF 1, EXCEPT BUMPER SURFACE TO BE 1/16 INCH THICK, FLAT IN LIEU OF 3/16 INCH THICK, SPHERICAL.

14. ITEMS REFERRING TO THIS NOTE SHALL BE LOCATED AND INSTALLED RELATIVE TO THE POSITION OF THE HEAD AND FOOT OF THE BERTH ASSEMBLY.

A 15. KICK–OUT FRAME ASSEMBLY, PC 51, AND KICK–OUT PANEL, PC 52, SHALL BE FACTORY INSTALLED IN THE BOTTOM BACK PANEL OF THE BERTH ASSEMBLY. (DETERMINED BY THE COMPARTMENT ARRANGEMENT FOR PERSONNEL EMERGENCY ESCAPE CONCERNS.) KICK–OUT FRAME ASSEMBLY, PC 51, AND KICK–OUT PANEL, PC 52, SHALL BE PAINTED SEPARATELY, PRIOR TO ASSEMBLY, IN ORDER TO PREVENT A PAINT BOND FROM FORMING BETWEEN THESE COMPONENTS,

16. MANUFACTURER'S LABEL, PC 83, SHALL AFFIXED TO THE INNER SIDE OF THE TOP RAIL OF EACH HEAD/FOOTBOARD FRAME ASSEMBLY, DETAIL 35–A, SHEET 5 WITH EPOXY RESIN BASE ADHESIVE, COMMERCIAL ITEM DESCRIPTION A–A–59109, SHALL BE STAMPED ALUMINUM AND SHALL CONTAIN THE FOLLOWING:

MFR'S IDENTIFICATION
DWG: TYPE 804–5959312
TYPE, SIZE AND STYLE
CONTRACT/ORDER NUMBER
DATE

17. BOLT SNAP, PC 55, SHALL BE SQUARE RIGID EYE BOLT SNAP FOR INSTALLATION ON 2 INCH WIDE STRAP. OVERALL LENGTH ABOUT 4 INCHES.

18. SNAP BUSHING, PC 69, AND DOME PLUG, PC 70, SHALL BE ELECTRICAL INSULATING TYPES WITH LOCKING FINGERS SNAP ACTION SUITABLE FOR A 1/2 INCH MOUNTING HOLE DIAMETER; BUSHING SHALL HAVE A 0.391 MINIMUM INSIDE DIAMETER OPENING.

SNAP BUSHING, PC 69, SHALL BE HEYCO SNAP BUSHING PART NUMBER 2053 OR EQUAL. DOME PLUG, PC 70, SHALL BE HEYCO DOME PLUG PART NUMBER 2643 OR EQUAL.

19. SUBBASE HEIGHTS REFERRING TO THIS NOTE PROVIDE A HEIGHT OF 10 INCHES FROM THE DECK TO THE TOP OF A 3 INCH THICK NEOPRENE FOAM MATTRESS FOR CREW BERTHS AND A 4 INCH THICK NEOPRENE FOAM MATTRESS FOR CPO BERTHS. FOR INNERSPRING MATTRESSES, THIS HEIGHT IS MEASURED TO APPROXIMATELY 11.5 INCHES TO ACCOUNT FOR THE GREATER MATTRESS THICKNESS.

20. BERTH HINGE, PC 18, IS PART NUMBER H1000 FROM:
SIERRA PACIFIC ENGINEERING AND PRODUCTS
3144 E. MARIA STREET
RANCHO DOMINGUEZ, CA 90221

21. HINGE, PC 136 SHALL BE 1–1/2 INCH OPEN WIDTH CONTINUOUS HINGE WITH .050 THICK STAINLESS STEEL LEAVES AND 1/8 INCH DIAMETER STAINLESS STEEL PIN.

22. FOR ON–SITE INSTALLATION CONCERNS, SUBBASE ASSEMBLY STANDARD HEIGHTS MAY BE TRIMMED AS FOLLOWS:

PC 41 MAY BE TRIMMED FROM 2–1/2 INCHES TO 1–3/4 INCHES (MIN)
PC 42 MAY BE TRIMMED FROM 4 INCHES TO 2–3/8 INCHES (MIN)

23. BERTH LIGHT LOCATION SHALL BE IN ACCORDANCE WITH THE FOLLOWING:

STYLE 1 17–7/8"
STYLE 2 15–1/2"
STYLE 3 12"

DIMENSIONS ARE TAKEN FROM THE HEAD END OF BERTH TO CENTER LINE OF THE BERTH LIGHT.

24. DECAL, PC 38, SHALL BE MADE FROM RED ENGINEERING GRADE REFLECTIVE SHEATHING THAT IS DIE CUT WEEDED AND PRE–MASKED. APPLIED LETTERS SHALL BE 1 INCH HIGH, CENTERED ON THE KICK–OUT PANEL ON EACH SIDE AND READ AS FOLLOWS:

WARNING
EMERGENCY ESCAPE
DO NOT OBSTRUCT

25. BERTH SUBASSEMBLIES OR PIECE ITEMS SHOWN IN THIS DRAWING ARE SPECIFICALLY DESIGNED TO RECEIVE ARTICLES OF OUTFITTING THAT ARE SUPPLIED BY OTHER CONCERNS I.E., EEBD STOWAGE CONTAINER (REF 1) AND BERTH CURTAIN (REF 2).

26. FOR SIZE 3 AND 5 BERTHS ONLY, PROVIDE A STAMPED ALUMINUM LABEL PLATE INSCRIBED "LONG BERTH". LABEL PLATE SHALL BE INSCRIBED USING 1/2 INCH HIGH LETTERING AND FIELD INSTALLED WITH EPOXY BASE ADHESIVE, COMMERCIAL ITEM DESCRIPTION A–A–59109 TO THE UPPERMOST SLEEPING SURFACE.

27. BERTH STAPLE, PC 23, IS PART NUMBER H1068–01 FROM:

SIERRA PACIFIC ENGINEERING AND PRODUCTS
3144 E. MARIA STREET
RANCHO DOMINGUEZ, CA 90221

MATERIAL: STEEL CASTING IAW ASTM–A148, GRADE 65–35.

28. APPLY REFLEXITE CONSPICUITY TAPE, PC 37, IN RED/SILVER ALTERNATING PATTERN THAT IS CUSTOM SLIT TO 3/4 INCH WIDE AROUND ON BOTH SIDES OF THE KICK–OUT PANEL AS SHOWN IN DETAIL 65–D.

A 29. BERTH LIGHT, PC 49, SHALL BE EITHER FLUORESCENT OR SOLID STATE LIGHTING AS SPECIFIED AND SHALL BE SUPPLIED AS FOLLOWS:

FOR NEW CONSTRUCTION AND/OR FOR SHIPS ORIGINALLY OUTFITTED WITH FIXTURES WITH RECEPTACLES, PROVIDE FIXTURE SYMBOL 232.1 IN ACCORDANCE WITH MIL–DTL–16377/17A (FOR PAN TYPE BERTHS) SUPPLIED WITH 16/5 SDN CABLE.

FOR FIXTURES WITHOUT RECEPTACLES, PROVIDE FIXTURE SYMBOL 232 IN ACCORDANCE WITH MIL–DTL–16377/17A SUPPLIED WITH SVT18/3 CABLE.

NOTE: FOR NEW CONSTRUCTION SHIPS, SHIPS ORIGINALLY OUTFITTED WITH FIXTURES WITH RECEPTACLES AND SHIPS ORIGINALLY OUTFITTED WITHOUT RECEPTACLES AND PLAN TO UPGRADE TO FIXTURES WITH RECEPTACLES, THE TOTAL NUMBER OF RECEPTACLES PER CIRCUIT SHALL BE IN ACCORDANCE WITH GSO 331. NEW ISOLATED RECEPTACLES CIRCUIT SHALL BE PROTECTED WITH A CIRCUIT BREAKER IN LIEU OF A FUSE. TWO SEPARATE CIRCUITS SHALL BE PROVIDED TO SUPPORT LIGHTING FIXTURES OUTFITTED WITH A RECEPTACLE. THE RECEPTACLE SHALL BE CONNECTED TO AN ISOLATED RECEPTACLE CIRCUIT. THE LAMP SHALL BE CONNECTED TO A LIGHTING CIRCUIT. CONNECTING THE LAMP AND RECEPTACLE ON THE SAME CIRCUIT IS PROHIBITED FOR PERSONAL SAFETY REASONS.

30. GROMMET, PC 84, IS STYRENE BUTADIENE RUBBER (SBR) MATERIAL WITH A SHORE "A" HARDNESS OF 55, MCMASTER–CARR PART NUMBER 9600K18 OR EQUAL. PC 84 SHALL BE FACTORY INSTALLED ON EACH ASSEMBLY.

31. AFTER THE INSTALLATION OF THE SUBBASE ASSEMBLY, USE DECK UNDERLAYMENT MATERIAL TO SEAL SUBBASE TRIM TO DECK. USE GENERAL ELECTRIC RTV 732 CLEAR SEALER TO SEAL INTERFACE BETWEEN DECK TILE AND SUBBASE TRIM.

32. MFR LABEL PLATE FOR THE FAN ASSEMBLY SHALL BE AFFIXED TO THE LOWER FACE OF THE FAN HOUSING WITH EPOXY RESIN BASE ADHESIVE, COMMERCIAL ITEM DESCRIPTION A–A–59109, SHALL BE STAMPED ALUMINUM AND SHALL CONTAIN THE FOLLOWING:

MFR'S IDENTIFICATION
DWG: TYPE 804–5959312
NSN: 2090–01–284–4308
CONTRACT/ORDER NUMBER
DATE

33. DETENT RING PIN ASSY, PC 35, IS PART NUMBER ADP3–47NIS–S FROM:

PIVOT POINT, INC.
P.O. BOX 488
HUSTISFORD, WI 53034

ALTERNATE DETENT RING PIN ASSY (RING GRIP WITH LANYARD) PART NUMBER IS 94975A113 FROM:

MCMASTER–CARR
P.O. BOX 440
NEW BRUNSWICK, NJ 08903

FASTEN LANYARD ASSY TO DOOR WITH 3/16 INCH ALUMINUM RIVET.

34. NOTES 1 AND 2 FOR THE CONSTRUCTION OF BERTHS ALSO APPLY TO THE CONSTRUCTION OF FAN ASSEMBLIES.

35. FAN, PC 147, IS MULTICOMP PART NUMBER MC1123LSL FROM:

SPC TECHNOLOGY
4801 N. RAVENSWOOD AVENUE
CHICAGO, IL 60640–4496

MC1123LSL PRODUCT DESCRIPTION: AC TUBEAXIAL FAN, LOW SPEED VERSION, 4.76 INCH SQUARE X 1.5 INCH DEEP, SLEEVE BEARINGS, LEAD WIRE CONNECTION, 115 VOLTS DEG C, 11 WATT, 2200 RPM, 76 CFM, 38 DBA.

36. INSTALLATION OF THE FAN ASSEMBLY REQUIRES REMOVAL OF THAT PORTION OF THE CURTAIN TRACK OCCUPIED BY THE FAN. A FIXED PANEL CURTAIN, MADE IN ACCORDANCE WITH REF 3, SHALL BE INSTALLED UNDER THE FAN AND SHALL BE FURNISHED WITH 2 SNAP STUDS, "BABY DURABLE" PART NUMBER 12303 OR EQUAL, TO SUIT LOCATION OF SOCKET SNAP, PC 165 OR EQUAL.

37. WHERE A DIFFERENT BUT EQUAL FAN UNIT IS USED, THE FAN HOUSING ASSEMBLY MAY REQUIRE MODIFICATIONS ACCORDINGLY; FAN ASSEMBLY DIMENSIONAL ENVELOPE AND FAN TRIM SHALL REMAIN AS IS. TERMINAL TYPE FAN UNITS ARE PROHIBITED. ATTACH TOGGLE SWITCH RING TERMINALS, PC 161, TO THE FAN'S POWER CORD PIGTAIL PRIOR TO FINAL CONNECTION TO THE SWITCH.

38. CURTAIN TRACK, PC 65, SHALL BE FACTORY INSTALLED ON EACH GRAB BAR, PC 63, AND ON THE BOTTOM FRONT EDGE OF EACH INTERMEDIATE AND UPPER BERTH LOCKER AND/OR BERTH PAN.

39. MOUNTING HOLES FOR STEPS, PC 61 AND PC 62, SHALL NOT BE PROVIDED. ITEM WILL BE FIELD DRILLED TO SUIT EACH BERTH UNITS HEAD/FOOT BOARD ON–SITE ARRANGEMENT.

40. GAS SPRING ASSEMBLY, PC 117, IS PART NUMBER GGS20–P1–120 WITH ETF 203 END FITTINGS FROM:

H.A. GUDEN CO., INC.
99 RAYNOR AVENUE
RONKONOMA, NY 11779

PRODUCT ITEM SUBSTITUTION IS PROHIBITED.

41. PHOTOLUMINESCENT "EEBD" VINYL LABEL, PC 122, AND "PULL PIN" VINYL LABEL, PC 123, SHALL CONFORM TO THE MINIMUM PHOTOMETRIC REQUIREMENTS PER ASTM E2072 AND HAVE A PRESSURE SENSITIVE ADHESIVE BACKING ON EACH.

STENCILED LETTERS AND ARROW SHALL BE PHOTOLUMINESCENT RED COLOR NUMBER 11105 OF FED STD 595.

"PULL PIN" LABEL DIMENSION AND LETTERING SIZES SHALL BE IN ACCORDANCE WITH DETAIL 5–E OF REFERENCE 1.

"EEBD" LABEL OVERALL DIMENSION SHALL BE 1–1/2 INCHES WIDE BY 5 INCHES HIGH; EACH LETTER SHALL BE 1/2 INCH WIDE BY 3/4 INCH HIGH WITH 1/2 INCH SPACING BETWEEN LETTERS AND 1/4 INCH SPACE BETWEEN THE LABEL'S TOP AND BOTTOM EDGES TO THE LETTERS.

CONTINUED ON SHEET 14, ZONE 112–F

REVISIONS

ZONE	REV	DESCRIPTION	DATE	APPROVED
ALL	B	MODIFIED FORMAT OF ALL SHEETS. MODIFIED PARTS LIST TO REFLECT CHANGE IN FORMAT. RENUMBERED DETAILS TO REFLECT CHANGE IN FORMAT. RENUMBERED NOTES TO REFLECT CHANGE IN FORMAT.	4/21/05	SEA 050 EMAIL APRIL 21,2005: THE SIB APPROVED TYPE DWG 804–5959312B ON 18 APRIL 2005.
1A	C	UPDATED REVISION STATUS OF SHEETS BLOCK.		
3E		MOVED GENERAL NOTES 42 THROUGH 49 TO SHEET 14.		
5A		ADDED REFERENCES 5 AND 6.		
6B		REVISED GENERAL NOTE 29 TO INCLUDE LIGHT OPTION AND CORRECTED MIL SPEC.		
8A		ADDED REQUIREMENT TO PAINT KICK–OUT PANEL FRAME ASSEMBLY AND PANEL SEPERATELY TO NOTE 15.		
8D		REVISED GENERAL NOTE 8 FOR INNERSPRING MATTRESSES.		
8E		CHANGED CODE 9780 TO 9740 IN GENERAL NOTE 2.		
9E		DELETED ZONE AND SHEET NO. CALL OUT FOR PC NO. 47. CORRECTED MIL SPEC FOR PC NO. 49		
15E		ADDED NEW PC NO,'S 170, 171, 172 AND 173 TO PARTS LIST.		
19C, 19D		ADDED MAGAZINE RACK IN DETAILS 19–A AND 19–D CHANGED NOTE 8 TO NOTE 8 & 53 IN DETAILS 19–A AND 19–D.		
SH 3		CHANGED NOTE 8 TO NOTE 8 & 53 IN DETAILS 19–C, 19–E, 20–A, 20–C, 20–D, 20–E, 22–A, 22–C, 22–D, 22–E, 23–A, AND 23–C.		
28A,		ADDED MAGAZINE RACK IN DETAIL 26–A. ADDED DETAIL 108–C TO SEE NOTE 23, DET 90–A AND DET 108–A.		
30A, 30F, 32C, 32F		CHANGED NOTE 8 TO NOTE 8 & 52 IN DETAILS 30–A, 30–D, 31–A AND 31–D. ADDED FASTENERS (PC NO. 73 & 74) FOR BOTTOM BACK PANEL IN DETAIL 30–A.		
35B, 35C		ADDED ELONGATED HOLES AND RUBBER GROMMET, PC NO. 172. FOR BERTH LIGHT CABLE.		
37B, 37E		CHANGED NOTE 8 TO NOTE 8 & 52 IN DETAILS 37–A AND 37–D.		
65D		ADDED WARNING LABEL, PC NO. 170, TO DETAIL 65–D.		
67F		ADDED FASTENERS (PC NO, 73 & 74) FOR BOTTOM BACK PANEL IN DETAIL 67–D.		
68B		CORRECTED CALL OUT FOR GROMMET, PC NO. 84, IN DETAIL 68–A.		
91A		CORRECTED SPELLING OF BERTH UNDER DETAIL 90–A.		
105A		ADDED NEW SHEET 14.		
106A, 106D, 108A		ADDED DETAILS 106–A, 106–D AND 108–A.		
112B		ADDED GENERAL NOTES 50 THROUGH 55.		

CAD MAINTAINED DRAWING: CHANGES SHALL BE INCORPORATED BY NAVAL SURFACE WARFARE CENTER, CARDEROCK DIVISION, SHIP SYSTEM ENGINEERING STATION, PHILADELPHIA, PA; CODE 974

AISI – AMERICAN IRON & STEEL INSTITUTE

14	13	12	11	10	9	8	7	6	5	4	3	2	1	SH	REVISION STATUS OF SHEETS
C	B	C	B	B	C	B	B	B	C	C	C	C	C	REV	

TYPE DRAWING

NO REF	DRAWING TITLE	DRAWING NO
6	LABEL PLATES	S2803–980209
5	LABEL PLATES	S2803–980208
4	MATTRESS, INNERSPRING, FLAME RESISTANT, SHIPBOARD	PURCHASE DESCRIPTION NAVSEA 0576 PD–04
3	MATTRESS AND MATTRESS TICKS, BERTH, SYNTHETIC CELLULAR RUBBER	MIL–M–18351
2	CURTAIN, BERTH, TYPE 3	A–A–59473
1	CONTAINER, STOWAGE EEBD	803–5751208

REFERENCE DRAWINGS

APPROVED FOR PUBLIC RELEASE: DISTRIBUTION IS UNLIMITED

UNLESS OTHERWISE NOTED, DIMENSIONS ARE IN "INCHES". TOLERANCES ARE IN ACCORDANCE WITH COMMERCIAL PRACTICE UNLESS OTHERWISE INDICATED ON DRAWING

CONTRACT NO.

PREP ACTIVITY FSCM

	SIGNATURE	DATE
PREPARED	MR & S	3–87
CHECKED	AED	4–87
HD ENGR	T. DADE	4–87
NAVY APPROVAL		
PROJ ENGR	R.J.WASINDA	4/18/95
BR. HD		
DIV. DIR	D.C.BEEMAN	4/19/95
GR DEP DIR	L.R.GRIECO	4/19/95
APPV'D FOR COMMANDER NAVSEA MICHAEL V. DROPIK	DATE	6/20/95

DEPARTMENT OF THE NAVY WASHINGTON NAVY YARD, D.C. 20376–5160
NAVAL SEA SYSTEMS COMMAND

BERTH, MODULAR LIGHTWEIGHT

SIZE	CAGE CODE	ESWBS	DRAWING NO.	REV
F	53711	804	5959312	C

SCALE:AS SHOWN WEIGHT: SHEET 1 OF 14

DRAWING NO. 804–5959312 SH 1 REV C

QTY	FC NO	DESCRIPTION	MATERIAL	MATL SPEC	REMARKS	ZONE	SH NO
AS REQ	173	CLAMP, CABLE	VARIOUS	COML	NSN 5375-00-291-5347		14
AS REQ	172	GROMMET	RUBBER	COML	NOTE 55	35A	5
AS REQ	171	MAGAZINE RACK	AL 5052-H32	ASTM-B209	NOTE 54	106D	14
2	170	LABEL PLATE	ALUMINUM	COML	NOTE 50 AND 51	106A	14
AS REQ	169	PAD, TAPPING	STEEL	ASTM-A366		75A	10
2	168	WASHER, NATURAL HDPE		COML	5.0 O.D. X 4.375 I.D. X .03 THICK	102D	13
1	167	FAN DIFFUSER	AL 5052-H32	ASTM-B209	.040 AL	100D	13
1	166	BACK RETAINER	AL 5052-H32	ASTM-B209	.040 AL	102D	13
2	165	SNAP, SOCKET	NKL PLD BRS	COML	BABY DURABLE 12205	98A	13
2	164	RIVET, BLIND, .125 DIA.	CRES	COML	.188 – .250 GR	98A	13
4	163	K LOCK NUT	STEEL	COML	#6-32, ZINC CTD	97C	13
1	162	TRIM, FAN	AL 5052-H32	ASTM-B209	.050 AL	98A	13
4	161	RING TERMINAL, TOGGLE SWITCH		COML	#6, 22-18 AWG (NOT SHOWN)	NOTE 37	1
1	160	TERMINAL, RING		COML	#8, 22-18 AWG	97C	13
2	159	K LOCK NUT	STEEL	COML	#8-32, ZINC CTD	97C	13
1	158	SCREW, TRUSS HD	STEEL	COML	#8-32 X .50 LG, ZINC CTD	97C	13
3	157	RIVET, BLIND, .187 DIA.	ALUMINUM	COML	.126 – .250 GR	98A	13
AS REQ	156	BRACKET, SUBBASE CORNER	STEEL	ASTM-A366		75D	10
1	155	CABLE (BLACK), SVT, 18-3		COML	20 FT	98A	13
1	154	BUSHING, STRAIN RELIEF		COML	HEYCO 1137	98A	13
1	153	CLAMP, CABLE	AL 5052-H32	ASTM-B209	.050 AL	98A	13
4	152	NUT, SELF LOCKING	STEEL	COML	#6-32, ZINC CTD	98A	13
1	151	COVER, HOUSING	AL 5052-H32	ASTM-B209	.040 AL	98A	13
4	150	SCREW, TRUSS HD	STEEL	COML	#6-32 X 1.875 LG, ZINC CTD	98A	13
1	149	FRONT RETAINER	AL 5052-H32	ASTM-B209	.040 AL	102D	13
1	148	SWITCH, TOGGLE, DBL POLE		COML	CARLING INDUSTRIES DK 28473	98A	13
1	147	FAN, AC, LOW SPEED		COML	NOTE 35, 36 & 37	97C	13
1	146	HOUSING, FAN	AL 5052-H32	ASTM-B209	.040 AL	98A	13
*	145	NOT USED					
	144	NOT USED					
	143	NOT USED					
	142	NOT USED					
	141	RAIL, TOP HD/FT BOARD	AL-5052-H32		.063 THK	35A	5
	140	LABEL PLATE	AL	COML	NOTE 26	26A	4
	139	RIVET, BLIND	CRES	MIL-R-24243\1	1/4 DIA DOME HD	68C	9
	138	STAPLE	CRES			57C	8
	137	HASP	AL-5052-H32	ASTM-B209	FOR PC 34	57A	8
	136	HINGE, CONTINUOUS	CRES	COML	NOTE 21	59D	8
	135	COVER, SNAP IN BACK	STEEL	ASTM A366	FOR PC 132	59D	8
	134	SCREW, PHD, 1/4-20		COML	0.75 LONG	95A	12
	133	HANDLE, LIFT	STEEL	ASTM A366	FOR PC 132	59D	8
	132	DOOR, SM ART LKR	STEEL	ASTM A366		59D	8
	131	BRACKET, GAS SPRING	AL-5052-H32	ASTM B209	.125 THK	95A	12
	130	DOUBLER, GAS SPRING BRACKET	AL-5052-H32	ASTM B209	.080 THK	95A	12
	129	SUBBASE CTR BRKT	STEEL	ASTM A366		74A, 78D	10
	128	HINGE, GAS SPRING REINFORCER	AL-5052-H32	ASTM B209	.125 THK	95A	12
	127	#6-32 CAP HEX NUT	CRES	COML	ACORN SELF LOCKING	68D	9
	126	BRACKET, SUBBASE CORNER	STEEL	ASTM-A366		75D	10
	125	BRACKET, SUBBASE CORNER	STEEL	ASTM-A366		75D	10
	124	#10-20 HEX NUT	CRES	COML		73A	10
	123	PHOTOLUMINESCENT LABEL "PULL PIN"	VINYL TAPE	ASTM-E2072	NOTE 41	59A	8
	122	PHOTOLUMINESCENT LABEL "EEBD"	VINYL TAPE	ASTM-E2072	NOTE 41	59A	8
AS REQ	121	STIFFENER, PANEL	AL-5052-H32	ASTM B209	FOR PC 33	68A	9

(*)PARTS LIST (CONTD)

QTY	FC NO	DESCRIPTION	MATERIAL	MATL SPEC	REMARKS	ZONE	SH NO
	120	PIN, 1/4 DIA	CRES	ASTM-A276 TYPE 304	FOR PC 18	49E	7
	119	PIN, 1/4 DIA	CRES	ASTM-A276 TYPE 304	FOR PC 22	50C	7
	118	#6-32 FLAT HEAD,PHH SCREW	CRES	COML	#6-32UNC-2B	68D	9
	117	GAS SPRING ASSEMBLY	VARIOUS	COML	NOTE 40	95A	12
	116	RIVET, TRH, SOLID	STEEL	COML	3/16 DIA	49F	7
	115	RVT, CSK HD, SOL	AL	COML	1/4 DIA	49F	7
	114	CHOCK	AL-5052-H32	ASTM-B209	FOR PC 19	51E	7
	113	PL, DOUBLER	AL-5052-H32	ASTM-B209	FOR PC 25	51E	7
	112	PL, BACKING	AL-5052-H32	ASTM-B209	FOR PC 16	44D	6
	111	STOP, LID	AL-5052-H32	ASTM-B209	FOR PC 13	47D	6
	110	STOP, LID	AL-5052-H32	ASTM-B209	FOR PC 13	44D	6
	109	SPACER	AL-5052-H32	ASTM-B209	FOR HINGE, PC 14	48B	6
	108	RVT, CSK FLHD BLIND	AL / STEEL MANDREL	MIL-R-24243/10	3/16 DIA	48B	6
	107	RAIL, STANDOFF	AL-5052-H32	ASTM-B209	FOR EEBD STWG COMPT	44D	6
	106	REST, PROP	AL-5052-H32	ASTM-B209		44D	6
	105	STOP BRKT, PROP	AL-5052-H32	ASTM-B209		44D	6
	104	RVT SOLID, RDH	STEEL	COML	3/16 DIA	44A	6
	103	RVT, CSK FLHD SOL	AL	COML	3/16 DIA	44A	6
	102	COVER, BACK	AL-5052-H32	ASTM-B209	FOR SM ART LKR	44A	6
	101	TROUGH, PROP	AL-5052-H32	ASTM-B209	.050 THK	44A	6
	100	PARTITION, TRANSV	AL-5052-H32	ASTM-B209	FOR LKR BODY	41A	6
	99	PARTITION, CTR	AL-5052-H32	ASTM-B209	FOR LKR BODY	44D	6
	98	COVER, BACK	AL-5052-H32	ASTM-B209	FOR EEBD STWG COMPT	44A, 44D	6
	97	COVER, TOP	AL-5052-H32	ASTM-B209	FOR EEBD STWG COMPT	44A, 44D	6
	96	PANEL, LKR END	AL 5052-H32	ASTM-B209	FOR LKR BODY	41A	6
	95	PARTITION, INTR	AL 5052-H32	ASTM-B209	FOR LKR BODY	41A, 41D	6
	94	STIFFENER, PANEL	AL 5052-H32	ASTM-B209	FOR PC 6 OR PC 9	39E	5
	93	SPACER	AL 5052-H32	ASTM-B209	FOR PC 4 OR PC 7	39A	5
	92	RIVET, BLIND	ALUM/STL MANDREL	MIL-R-24243/10	1/8" DIA		
	91	RIVET, BLIND	ALUM/STL MANDREL	MIL-R-24243/10	3/16" DIA		
	90	STEP/LIFT HANDLE	AL 6063-T5	ASTM-B221	EXTRUSION-(CPO)	26A, 55A	4/7
	89	BRACKET, SUBBASE CORNER	STEEL	ASTM-A366		75D	10
	88	FLASHING	STEEL	ASTM-A366		79B	10
	87	BRACKET, MTG	AL 5052-H32	ASTM-B209	FOR EEBD STWG CONTAINER	65A	9
	86	WASHER, 1/4 FLAT	CRES	COML		63C, 63F	8
	85	PARTITION	AL 5052-H32	ASTM-B209		48A	6
	84	GROMMET	SBR	COML	NOTE 30	56D	7
	83	LABEL PLATE, MFR	AL	COML	NOTE 16	30A, 35A	4/5
	82	#4-40 CSK OHD MSCR	CRES	COML			
	81	1/4-20 HEX NUT	CRES	COML	SELF-LOCKING		
	80	1/4-20 CSK FLH MSCR	CRES	COML	100° CSK		
	79	1/4-20 HEX HD MSCR	CRES	COML			
	78	#8-32 HEX NUT	CRES	COML	SELF-LOCKING		
	77	#8-32 CSK FLH MSCR	CRES	COML			
	76	#8-32 PNH MSCR	CRES	COML			
	75	#10 FLAT WASHER	CRES	COML			
	74	#10-24 HEX NUT	CRES	COML	SELF-LOCKING		
	73	#10-24 PNH MSCR	CRES	COML			
	72	#10-24 HEX HD MSCR	CRES	COML			
	71	#10-24 CSK FLH MSCR	CRES	COML	100° CSK		
	70	PLUG, DOME	NYLON	COML	NOTE 18	35F	5
	69	BUSHING, SNAP	NYLON	COML	NOTE 18	35F	5
	68	CARD HOLDER	CRES	COML		68D	9
	67	KEEPER, RING	CRES	ASTM-A276 TYPE 304		30D, 53C	4/7
	66	RING	CRES	ASTM-A276 TYPE 304		30D, 54C	4/7
	65	CURTAIN TRACK	AL-6063-T5	ASTM-B221	A-A-59473	26A, 68C	4/9
	64	BRACKET, MTG	STEEL	ASTM-A366	FOR PC 63	68C	9
	63	GRAB BAR	STEEL	ASTM-A513	1-1/2 X 1 X 11 GA TUBE	68C	9
	62	STEP	STEEL	ASTM-A36/A366	FOR PAN BERTH	26D, 49B	4/7
AS REQ	61	STEP	STEEL	ASTM-A36/A366	FOR LKR BERTH	26A, 51A	4/7

(*)PARTS LIST (CONTD)

QTY	FC NO	DESCRIPTION	MATERIAL	MATL SPEC	REMARKS	ZONE	SH NO
	60	EYELET	AL	COML	FOR #10-24	70E	9
	59	BAR, BACKING	AL-6063-T5	ASTM-B221	FOR LEE STRAP	70E	9
	58	CLOTH, DUCK	COTTON		11.16 OZ	70E	9
	57	WEBBING	COTTON	MIL-W-530 TYPE III CL1	2 INCH WIDE	70E	9
	56	BUCKLE, SLIDE	STL, ZINC PLD	ASTM-A366	FOR PC 57	70E, 51C	9/7
	55	BOLT SNAP, SQ EYE	STL, ZINC PLD	COML	NOTE 17	70E	9
	54	TOWEL BAR ASSY	CRES	ASTM-A276 TYPE 304		26A, 53B	4/7
	53	STEP/LIFT HANDLE	AL-6063-T5	ASTM-B221	EXTRUSION (CREW)	26A, 55A	4/7
	52	PANEL, KICK-OUT	AL-5052-H32	ASTM-B209	NOTE 15	26A, 65D	4/9
	51	FRAME ASSY, KICK-OUT	AL-6063-T5	ASTM-B221	EXTRUSION NOTE 15	26A, 65F	4/9
	50	PANEL, INSERT	AL-5052-H32	ASTM-B209	FOR HEAD/FOOT BD	31A, 55C	4/7
	49	BERTH LIGHT FXTR			MIL-DTL-16377/17A NOTES 23 & 29	66A	9
	48	BRACKET, FXTR MTG	AL-5052-H32	ASTM-B209	FOR BERTH LIGHT	66A	9
	47	#10-24 CAP HEX NUT	CRES	COML	ACORN SELF LOCKING		
	46	HEX NUT	STL, ZINC PLD	COML	1/2-13 UNC-2B	79D, 79E	10
	45	SOCKET, STUD	AL-6061-T651	ASTM-B221	TAP THROUGH 1/2-13 UNC-2B	79D	10
	44	STUD, FULLY THREADED	STEEL	ASTM-A307	GRADE A 1/2-13 UNC-2A	79D	10
	43	STUD, WELDING	STEEL	MIL-S-24149/1D	TYPE II CL 1 1/2-13 UNC-2A	79E	10
	42	SUBBASE, ASSY (AL DK)	STEEL	ASTM-A366	NOTE 22	75A	10
	41	SUBBASE, ASSY (STL DK)	STEEL	ASTM-A366	NOTE 22	75A	10
	40	BRACKET, CROSS BRC	STEEL	ASTM-A366		61B, 62A	8
	39	CROSS BRACE	AL-6063-T5	ASTM-B221	1-1/2 X 1-1/2 X 1/8 CHANNEL	61B, 63E	8
	38	DECAL, EMERGENCY			NOTE 24	65D	9
	37	TAPE, REFLEXITE CONSPICUITY			NOTE 28	65D	9
	36	CUSHIONING	FOAMED LATEX	MIL-PRF-20092	1 X 1 SQ, TYPE II	59A	8
	35	DETENT RING PIN ASSY			NOTE 33	59A	8
	34	DOOR	AL-5052-H32	ASTM-B209	FOR EEBD STWG COMPT	59A	8
	33	PANEL, BERTH COVER	AL-5052-H32	ASTM-B209	FOR 2-HIGH BERTHS	68A	9
	32	BUMPER	RUBBER	COML	NOTE 13	59D	8
	31	LOCK, PB COMB			NOTE 12	59D	8
	30	FRAME ASSY	AL-5052-H32	ASTM-B209	FOR SMALL ART LKR DOOR	59D	8
	29	WASHER	STEEL	COML	ZINC CTD 3/16 DIA – FLAT	49F	7
	28	WASHER	NYLON	COML	3/4 OD X 1/4 ID X .0312	51D	7
	27	PIN, STOP	STEEL	COML	ZINC PLD NOTE 11	51D	7
	26	TIP, PROP	NYLON	COML		51D	7
	25	BRACKET, PROP	STEEL	ASTM-A366	ZINC PLD	51D	7
	24	PROP (TUBE)	AL-6061-T6	QQ-A-200/9	3/4 OD X .065	51D	7
	23	STAPLE, BERTH	STEEL CSTG	ASTM-A-148	NOTE 27	53A	7
	22	HASP	STEEL CRES PIN	ASTM-A366 ASTM-A276	ZINC COATED TYPE 304	44A, 50C	6/7
	21	PANEL, BOTTOM	AL-5052-H32	ASTM-B209	FOR LKR LID OR FIXED BERTH	51E, 55E	7
	20	BERTH RAIL, 1-1/4 H	AL-6063-T5	ASTM-B221	EXTRUSION	51E, 54D	7
	19	BERTH RAIL, 3-1/4 H	AL-6063-T5	ASTM-B221	EXTRUSION	51E, 53E	7
	18	HINGE, BERTH	STEEL CRES PIN	ASTM-A366 ASTM-A276	NOTE 20	49E, 51E	7
	17	HINGE, REINF	AL-5052-H32	ASTM-B209	FOR PC 18	41A, 43D	6
	16	STAPLE	STEEL	ASTM-A366	FOR PC 13	44A, 52B	6/7
	15	STAPLE	STEEL	ASTM-A366	FOR PC 13	44A, 52A	6/7
	14	HINGE, CONTINUOUS	AL/CRES PIN	COML	LG TO SUIT NOTE 10	44A, 59A	6/8
	13	LID, INTR ACCESS	AL-5052-H32	ASTM-B209	SMALL ART LKR	44A	6
	12	BODY, LOCKER	AL-5052-H32	ASTM-B209		41A	6
	11	FRONT, LKR, CPO	AL-6063-T5	ASTM-B221	EXTRUSION	41A, 43E	6
	10	FRONT, LKR, CREW	AL-6063-T5	ASTM-B221	EXTRUSION	41A, 43E	6
	9	BACK PANEL, TOP	AL-5052-H32	ASTM-B209	FOR BERTH W/OUT LOCKER-NOTE 5,6	37D	5
	8	BACK PANEL, INTMD	AL-5052-H32	ASTM-B209	FOR BERTH W/OUT LOCKER-NOTE 5,6	37D	5
	7	BACK PANEL, BOTTOM	AL-5052-H32	ASTM-B209	FOR BERTH W/OUT LOCKER-NOTE 5,6	37D	5
	6	BACK PANEL, TOP	AL-5052-H32	ASTM-B209	FOR BERTH WITH LOCKER-NOTE 5,6	37A	5
	5	BACK PANEL, INTMD	AL-5052-H32	ASTM-B209	FOR BERTH WITH LOCKER-NOTE 5,6	37A	5
	4	BACK PANEL, BOTTOM	AL-5052-H32	ASTM-B209	FOR BERTH WITH LOCKER-NOTE 5,6	37A	5
	3	RAIL, BOTTOM HD/FT BOARD	AL-6063-T5	ASTM-B221	EXTRUSION	34E, 35A	5
	2	RAIL, INTMD HD/FT BOARD	AL-6063-T5	ASTM-B221	EXTRUSION	34F, 35A	5
AS REQ	1	STILE, HD/FT BOARD	AL-6063-T5	ASTM-B221	EXTRUSION	34D, 35A	5

(*)PARTS LIST

SIZE	FSCM NO.	SWBS	NAVSEA DRAWING NO.	REV.
F	53711	804	5959312	C
SCALE: NONE			SH. 2	

DRAWING NO. 804-5959312 SH. 2 REV. C

804-5959312, REV C, SH. 2

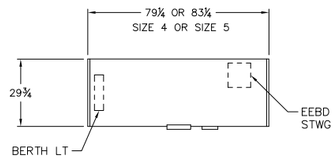

(*) DETAIL 23-E
TYPICAL PLAN
LH ARR SHOWN

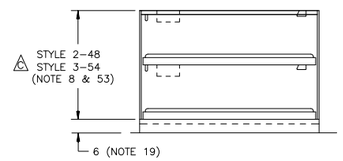

(*) DETAIL 22-E
2 HIGH-0 LKR
RH ARR SHOWN
TYPE XV

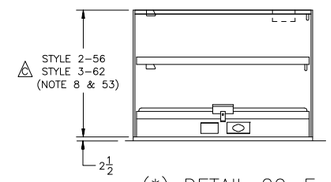

(*) DETAIL 20-E
2 HIGH-1 LKR
LH ARR SHOWN
TYPE XIV

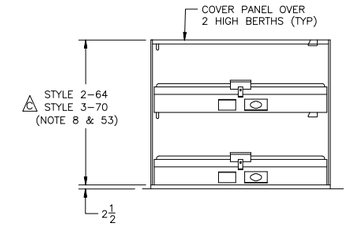

(*) DETAIL 19-E
2 HIGH-2 LKRS
RH ARR SHOWN
TYPE XIII

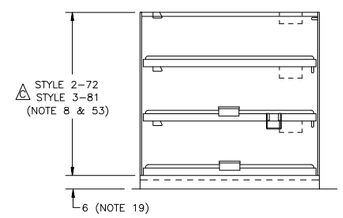

(*) DETAIL 22-D
3 HIGH-0 LKR
LH ARR SHOWN
TYPE XII

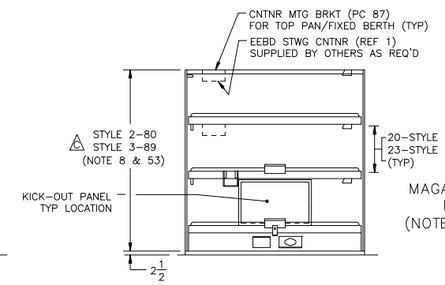

(*) DETAIL 20-D
3 HIGH-1 LKR
RH ARR SHOWN
TYPE XI

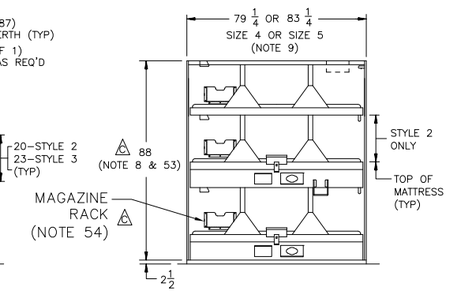

(*) DETAIL 19-D
3 HIGH-2 LKRS
LH ARR SHOWN
TYPE X

CHIEF PETTY OFFICER BERTHS

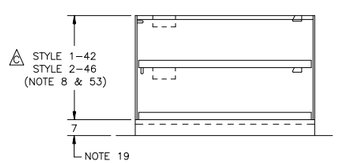

(*) DETAIL 23-C
2 HIGH-0 LKR
RH ARR SHOWN
TYPE VIII

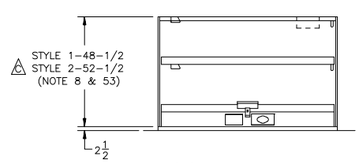

(*) DETAIL 22-C
2 HIGH-1 LKR
LH ARR SHOWN
TYPE VII

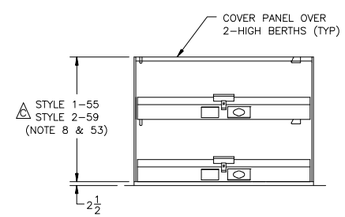

(*) DETAIL 20-C
2 HIGH-2 LKRS
RH ARR SHOWN
TYPE VI

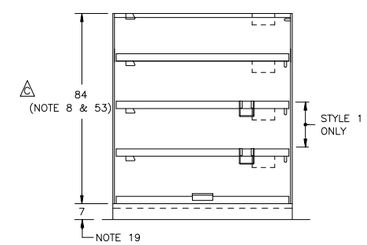

(*) DETAIL 19-C
4 HIGH-0 LKR
LH ARR SHOWN
TYPE V

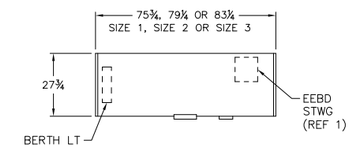

(*) DETAIL 17-C
TYPICAL PLAN
LH ARR SHOWN

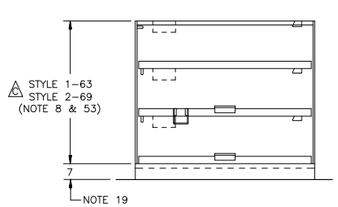

(*) DETAIL 23-A
3 HIGH-0 LKR
RH ARR SHOWN
TYPE IV

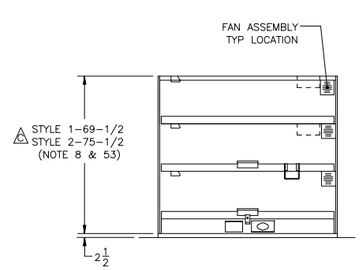

(*) DETAIL 22-A
3 HIGH-1 LKR
LH ARR SHOWN
TYPE III

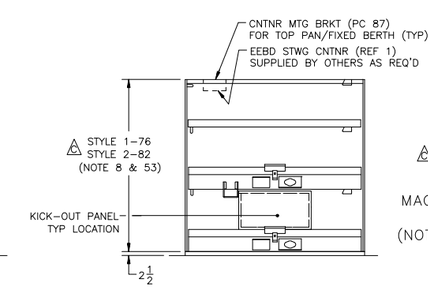

(*) DETAIL 20-A
3 HIGH-2 LKRS
RH ARR SHOWN
TYPE II

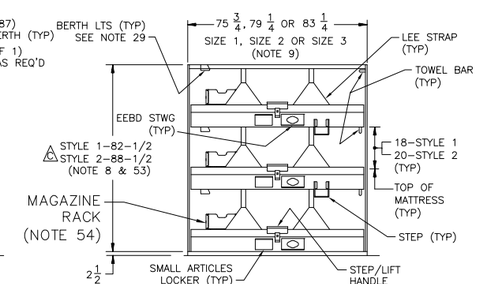

(*) DETAIL 19-A
3 HIGH-3 LKRS
LH ARR SHOWN
TYPE I

CREW AND TROOP BERTHS

SIZE	FSCM NO.	SWBS	NAVSEA DRAWING NO.	REV.
F	53711	804	5959312	C
SCALE: NONE			SH. 3	

DRAWING NO. 804-5959312 SH. 3 REV. C

804-5959312, REV C, SH. 3

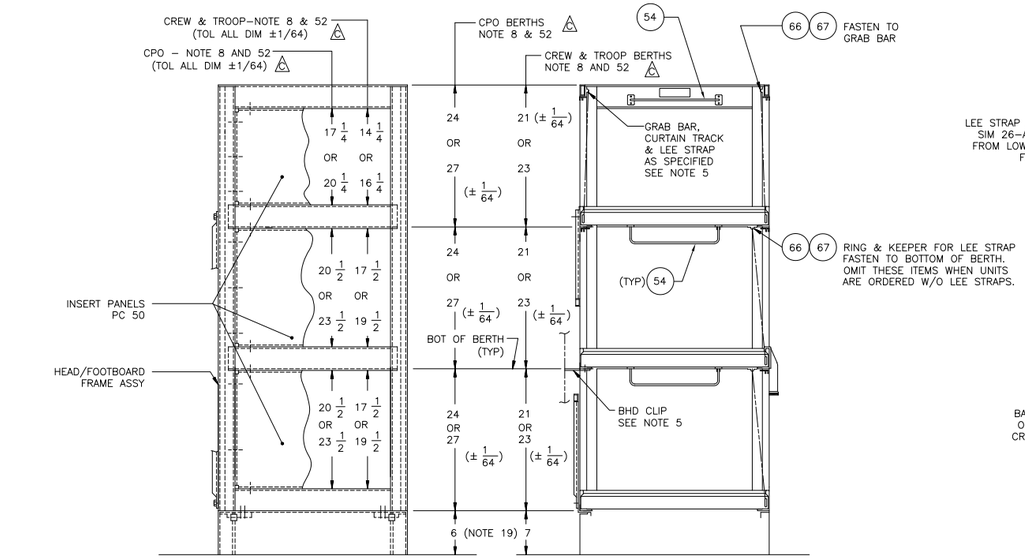

(*) SECTION 31–D

INFO NOT SHOWN SIM SECTION 31–A (SEE DET 35–A SH 5)

(*) SECTION 30–D

INFO NOT SHOWN SIM SECTION 30–A (SEE DET 35–A SH 5)

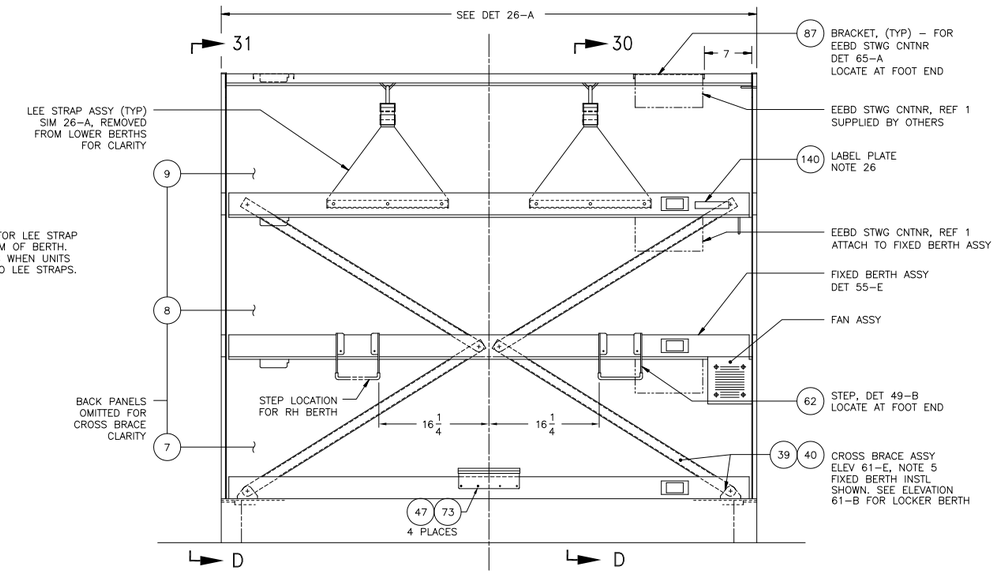

(*) DETAIL 26–D

TYPICAL PAN BERTH ASSY
LH ASSY SHOWN, RH OPPOSITE
INFO NOT SHOWN SIMILAR TO DETAIL 26–A

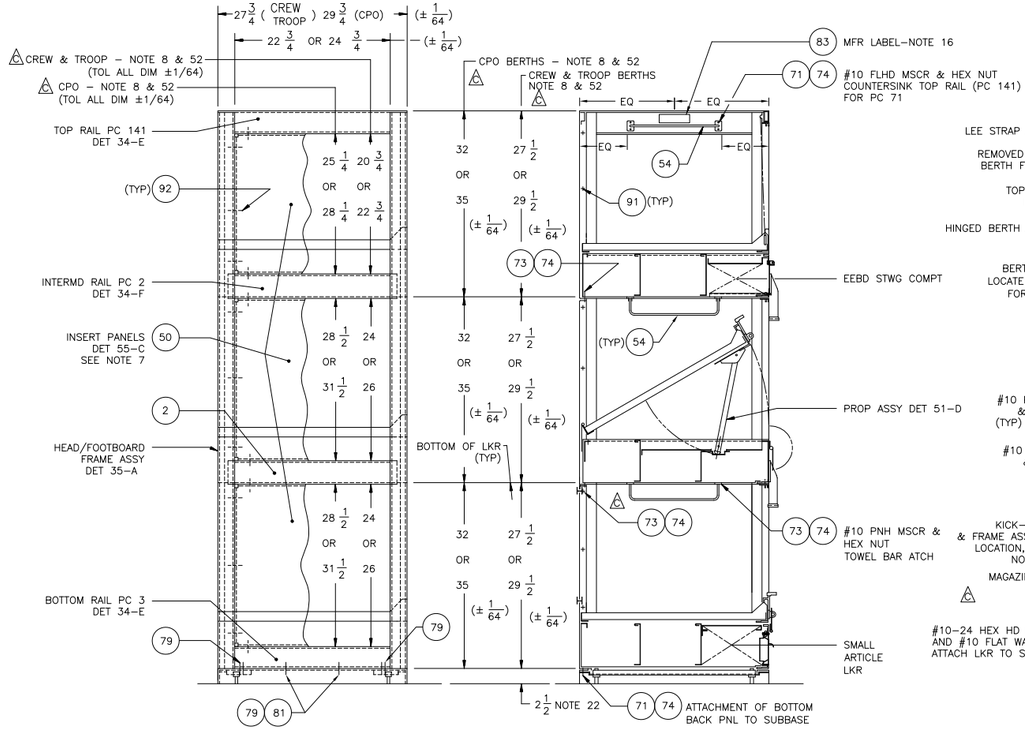

(*) SECTION 31–A

(*) SECTION 30–A

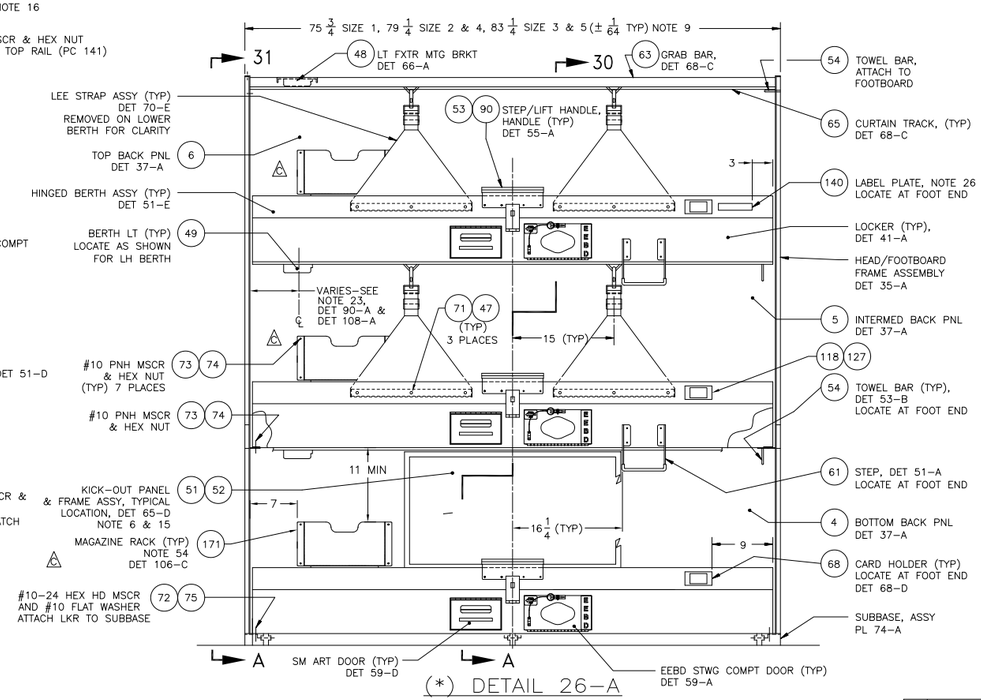

(*) DETAIL 26–A

TYPICAL LOCKER BERTH ASSY
LH ASSY SHOWN, RH OPPOSITE
INFORMATION NOT SHOWN SIMILAR TO DETAIL 26–D

SIZE	FSCM NO.	SWBS	NAVSEA DRAWING NO.	REV.
F	53711	804	5959312	C
SCALE: NONE			SH. 4	

DRAWING NO. 804–5959312 SH 4 REV C

804–5959312, REV C, SH. 4

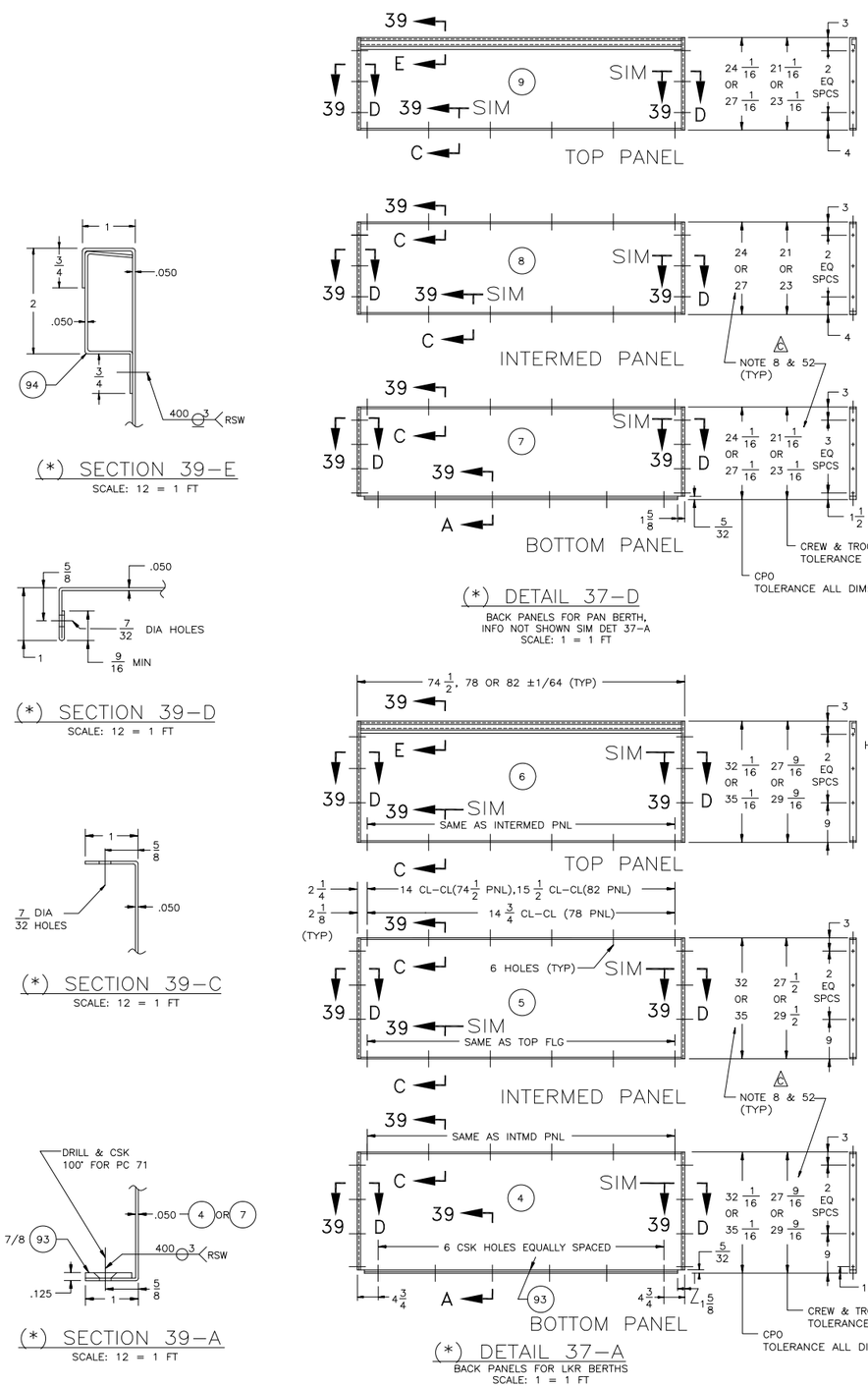

(*) DETAIL 37-D
BACK PANELS FOR PAN BERTH, INFO NOT SHOWN SIM DET 37-A
SCALE: 1 = 1 FT

(*) DETAIL 37-A
BACK PANELS FOR LKR BERTHS
SCALE: 1 = 1 FT

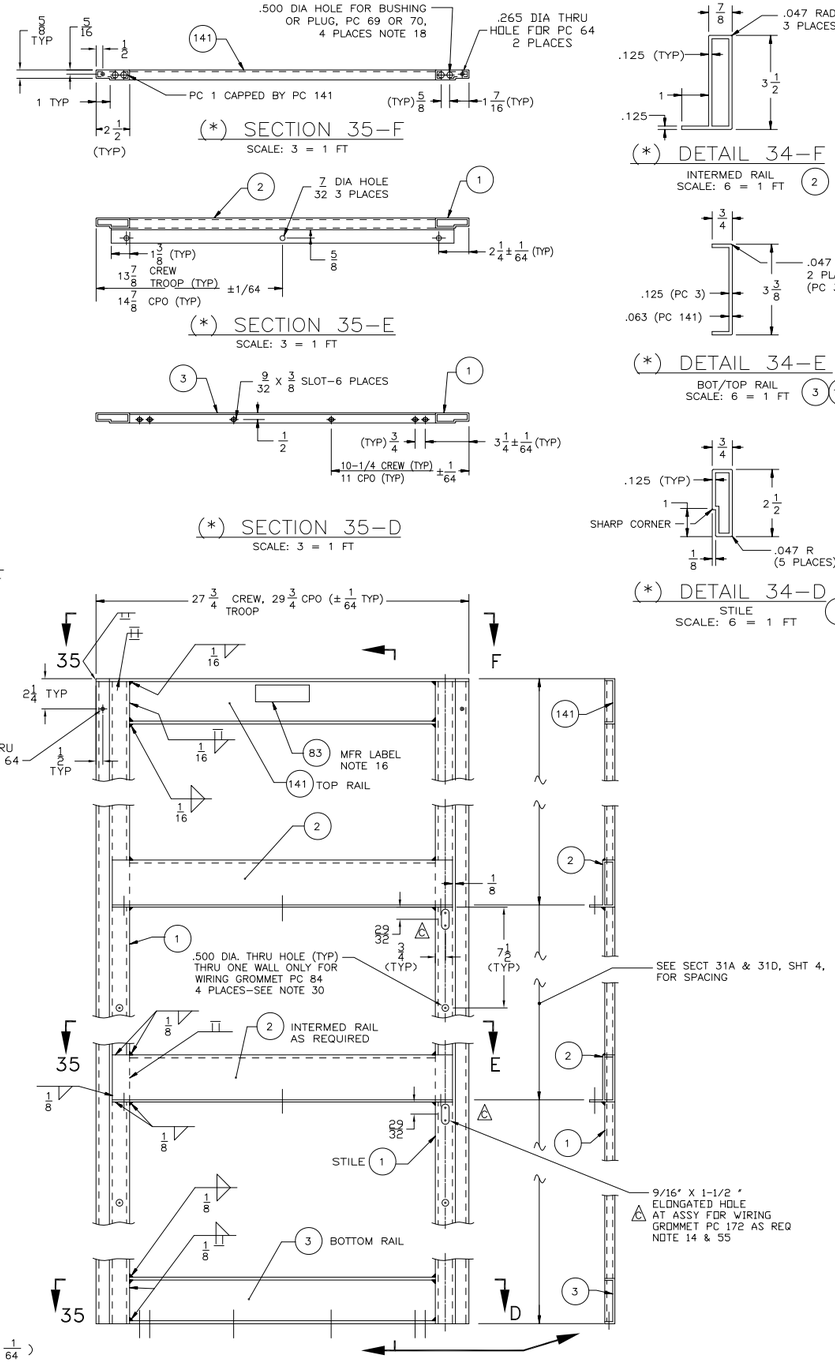

(*) SECTION 35-F
SCALE: 3 = 1 FT

(*) SECTION 35-E
SCALE: 3 = 1 FT

(*) SECTION 35-D
SCALE: 3 = 1 FT

(*) DETAIL 35-A
FRAME ASSY, HEAD/FOOT BOARD
SCALE: 3 = 1 FT

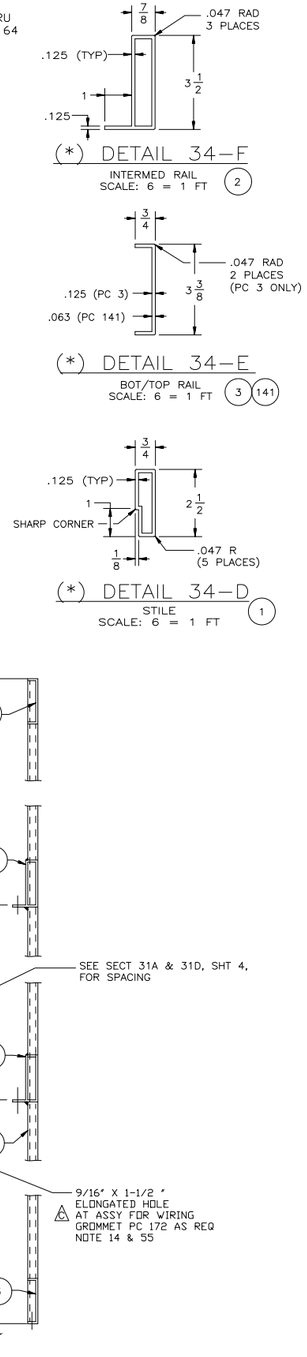

(*) DETAIL 34-F
INTERMED RAIL
SCALE: 6 = 1 FT

(*) DETAIL 34-E
BOT/TOP RAIL
SCALE: 6 = 1 FT

(*) DETAIL 34-D
STILE
SCALE: 6 = 1 FT

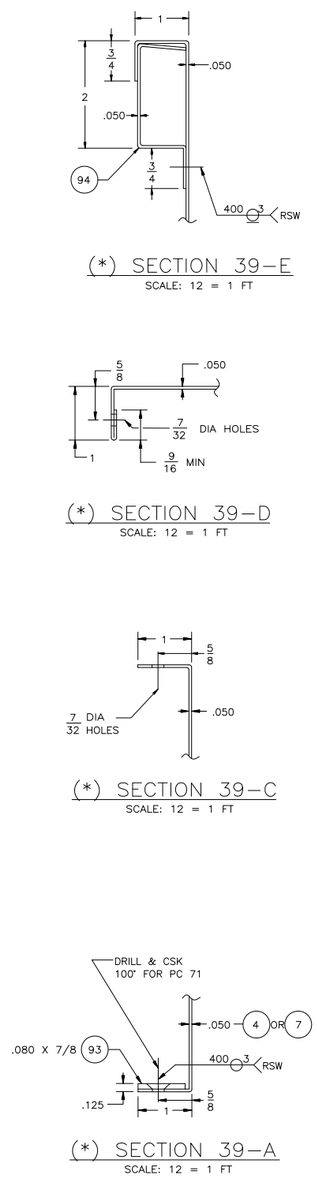

(*) SECTION 39-E
SCALE: 12 = 1 FT

(*) SECTION 39-D
SCALE: 12 = 1 FT

(*) SECTION 39-C
SCALE: 12 = 1 FT

(*) SECTION 39-A
SCALE: 12 = 1 FT

SIZE	FSCM NO.	SWBS	NAVSEA DRAWING NO.	REV.
F	53711	804	5959312	C
SCALE: AS NOTED			SH. 5	

DRAWING NO. 804-5959312 SH 5 REV C

804-5959312, REV C, SH. 5

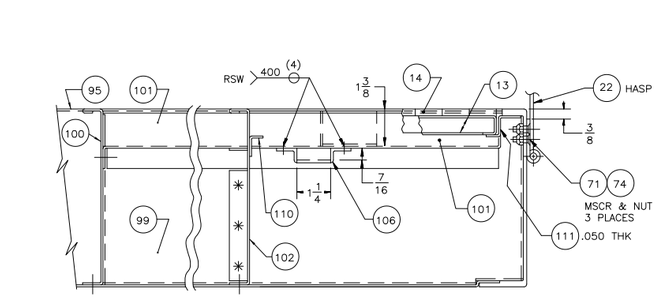

(*) SECTION 47–E
SCALE: 6 = 1 FT

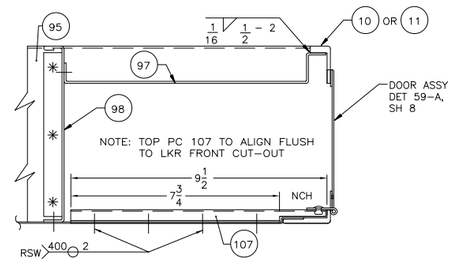

(*) SECTION 44–E
SCALE: 6 = 1 FT

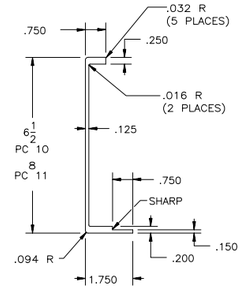

(*) DETAIL 43–E
LOCKER FRONT
SCALE: 6 = 1 FT

10 CREW
11 CPO

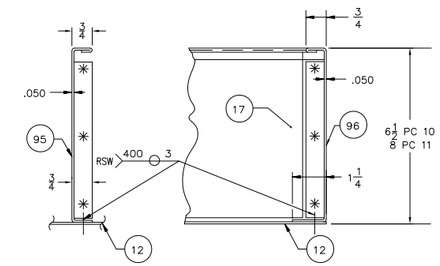

(*) SECTION 42–E
PARTITION (TYP)
SCALE: 6 = 1 FT

(*) SECTION 41–E
LOCKER END
SCALE: 6 = 1 FT

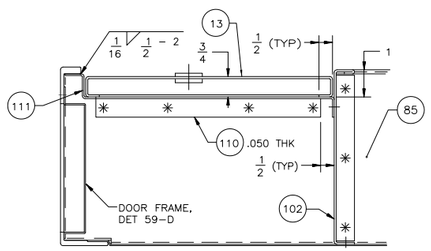

(*) SECTION 47–D
SCALE: 6 = 1 FT

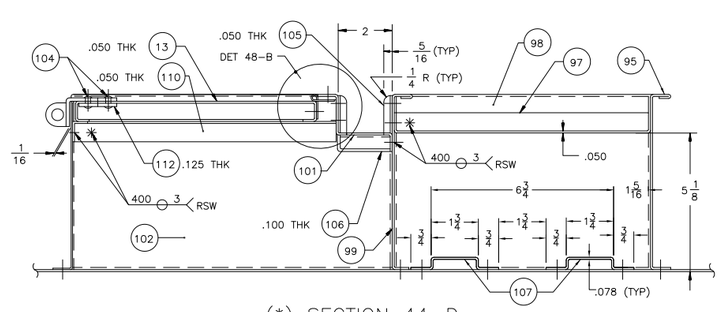

(*) SECTION 44–D
SCALE: 6 = 1 FT

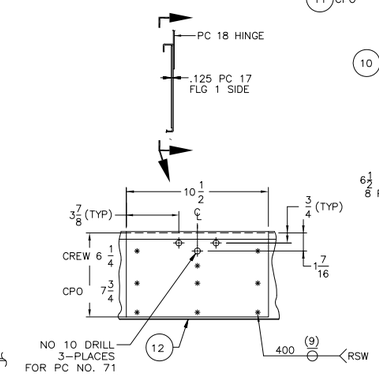

(*) SECTION 43–D
HINGE REINFORCEMENT
SCALE: 3 = 1 FT

17

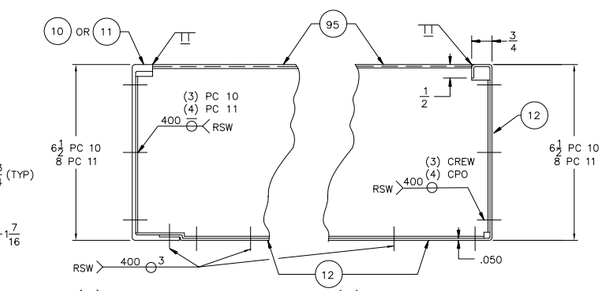

(*) SECTION 42–D
LOCKER FRONT
SCALE: 6 = 1 FT

(*) SECTION 41–D
LOCKER BACK
SCALE: 6 = 1 FT

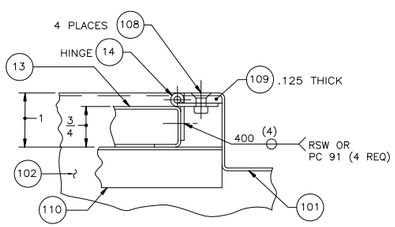

(*) DETAIL 48–B
SCALE: 12 = 1 FT

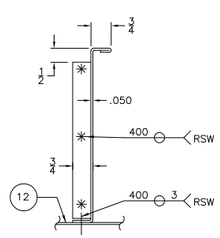

(*) SECTION 48–A
PARTITION
SCALE: 6 = 1 FT 85

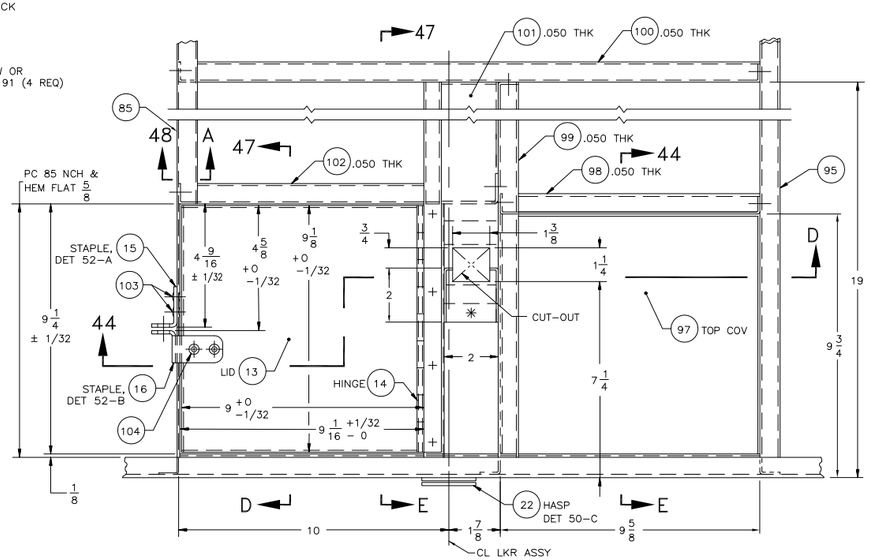

(*) DETAIL 44–A
SCALE: 6 = 1 FT

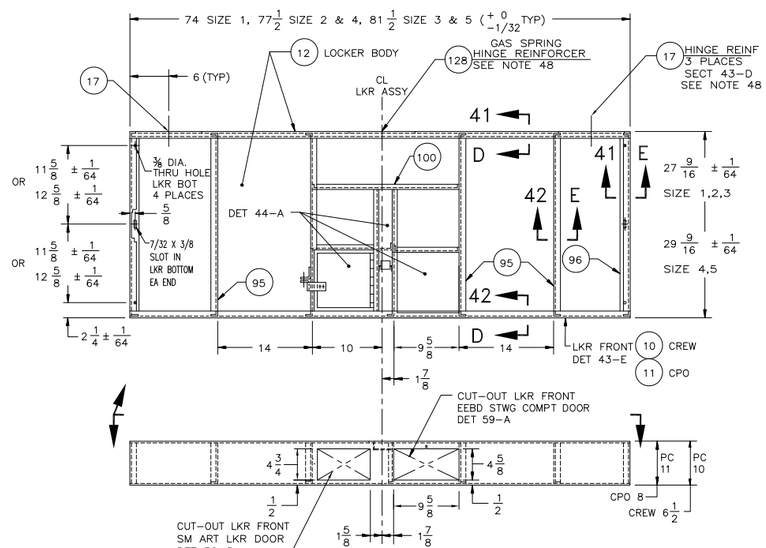

(*) DETAIL 41–A
LOCKER ASSY
SCALE: 1–1/2 = 1 FT

SIZE	FSCM NO.	SWBS	NAVSEA DRAWING NO.	REV.
F	53711	804	5959312	B
SCALE: AS NOTED			SH. 6	

DRAWING No. 804–5959312 SH 6 REV B

804–5959312, REV B, SH. 6

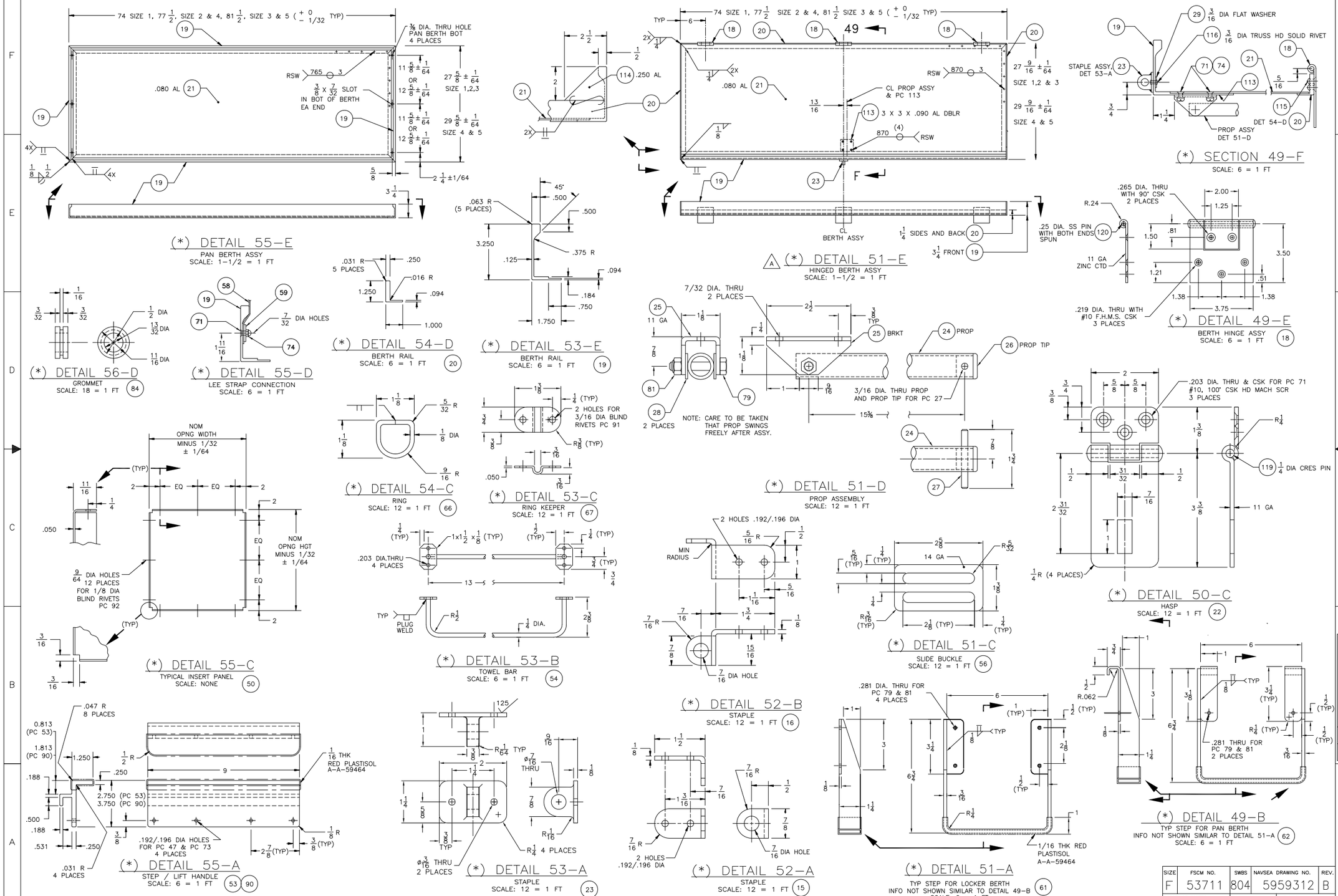
(*) DETAIL 55-E
PAN BERTH ASSY
SCALE: 1-1/2 = 1 FT
(*) DETAIL 51-E
HINGED BERTH ASSY
SCALE: 1-1/2 = 1 FT
(*) SECTION 49-F
SCALE: 6 = 1 FT
(*) DETAIL 49-E
BERTH HINGE ASSY
SCALE: 6 = 1 FT
(*) DETAIL 56-D
GROMMET
SCALE: 18 = 1 FT
(*) DETAIL 55-D
LEE STRAP CONNECTION
SCALE: 6 = 1 FT
(*) DETAIL 54-D
BERTH RAIL
SCALE: 6 = 1 FT
(*) DETAIL 53-E
BERTH RAIL
SCALE: 6 = 1 FT
(*) DETAIL 51-D
PROP ASSEMBLY
SCALE: 12 = 1 FT
(*) DETAIL 54-C
RING
SCALE: 12 = 1 FT
(*) DETAIL 53-C
RING KEEPER
SCALE: 12 = 1 FT
(*) DETAIL 50-C
HASP
SCALE: 12 = 1 FT
(*) DETAIL 55-C
TYPICAL INSERT PANEL
SCALE: NONE
(*) DETAIL 53-B
TOWEL BAR
SCALE: 6 = 1 FT
(*) DETAIL 52-B
STAPLE
SCALE: 12 = 1 FT
(*) DETAIL 51-C
SLIDE BUCKLE
SCALE: 12 = 1 FT
(*) DETAIL 55-A
STEP / LIFT HANDLE
SCALE: 6 = 1 FT
(*) DETAIL 53-A
STAPLE
SCALE: 12 = 1 FT
(*) DETAIL 52-A
STAPLE
SCALE: 12 = 1 FT
(*) DETAIL 51-A
TYP STEP FOR LOCKER BERTH
INFO NOT SHOWN SIMILAR TO DETAIL 49-B
SCALE: 6 = 1 FT
(*) DETAIL 49-B
TYP STEP FOR PAN BERTH
INFO NOT SHOWN SIMILAR TO DETAIL 51-A
SCALE: 6 = 1 FT
74 SIZE 1, 77 1/2, SIZE 2 & 4, 81 1/2, SIZE 3 & 5 (+0 -1/32 TYP)
3/8 DIA. THRU HOLE PAN BERTH BOT 4 PLACES
.080 AL
3/8 X 7/32 SLOT IN BOT OF BERTH EA END
27 5/8 ± 1/64 SIZE 1,2,3
29 5/8 ± 1/64 SIZE 4 & 5
2 1/4 ±1/64
.250 AL
CL PROP ASSY & PC 113
3 X 3 X .090 AL DBLR
27 9/16 ± 1/64 SIZE 1,2 & 3
29 9/16 ± 1/64 SIZE 4 & 5
CL BERTH ASSY
1 1/4 SIDES AND BACK
3 1/4 FRONT
3/16 DIA FLAT WASHER
3/16 DIA TRUSS HD SOLID RIVET
STAPLE ASSY, DET 53-A
PROP ASSY DET 51-D
DET 54-D
.265 DIA. THRU WITH 90° CSK 2 PLACES
.25 DIA. SS PIN WITH BOTH ENDS SPUN
11 GA ZINC CTD
.219 DIA. THRU WITH #10 F.H.M.S. CSK 3 PLACES
7/32 DIA. THRU 2 PLACES
11 GA
BRKT
PROP
PROP TIP
3/16 DIA. THRU PROP AND PROP TIP FOR PC 27
NOTE: CARE TO BE TAKEN THAT PROP SWINGS FREELY AFTER ASSY.
.203 DIA. THRU & CSK FOR PC 71 #10, 100° CSK HD MACH SCR 3 PLACES
1/4 DIA CRES PIN
11 GA
1/4 R (4 PLACES)
NOM OPNG WIDTH MINUS 1/32 ± 1/64
NOM OPNG HGT MINUS 1/32 ± 1/64
9/64 DIA HOLES 12 PLACES FOR 1/8 DIA BLIND RIVETS PC 92
2 HOLES FOR 3/16 DIA BLIND RIVETS PC 91
.203 DIA.THRU 4 PLACES
PLUG WELD
2 HOLES .192/.196 DIA
MIN RADIUS
7/16 DIA HOLE
14 GA
.281 DIA. THRU FOR PC 79 & 81 4 PLACES
1/16 THK RED PLASTISOL A-A-59464
.047 R 8 PLACES
1/16 THK RED PLASTISOL A-A-59464
.192/.196 DIA HOLES FOR PC 47 & PC 73 4 PLACES
.031 R 4 PLACES
.281 THRU FOR PC 79 & 81 2 PLACES
2 HOLES .192/.196 DIA
7/16 DIA HOLE
1/16 THK RED PLASTISOL A-A-59464
SIZE 53711 FSCM NO. 804 SWBS 5959312 NAVSEA DRAWING NO. B REV.
SCALE: AS NOTED SH. 7
DRAWING NO. 804-5959312 SH 7 REV B

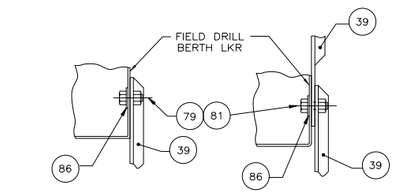

(*) SECTION 64–F (*) SECTION 63–F

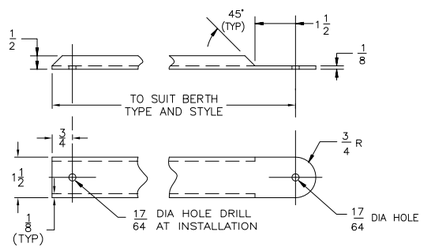

(*) DETAIL 63–E (39)
CROSS BRACE
SCALE: 6 = 1 FT

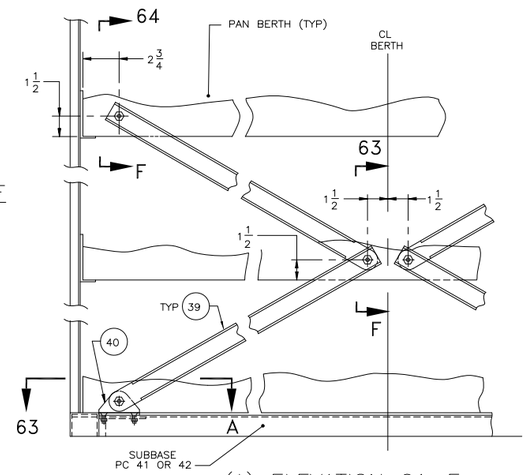

(*) ELEVATION 61–E
CROSS BRACE ASSEMBLY
LOOKING AT REAR OF PAN BERTHS
SCALE: 3 = 1 FT

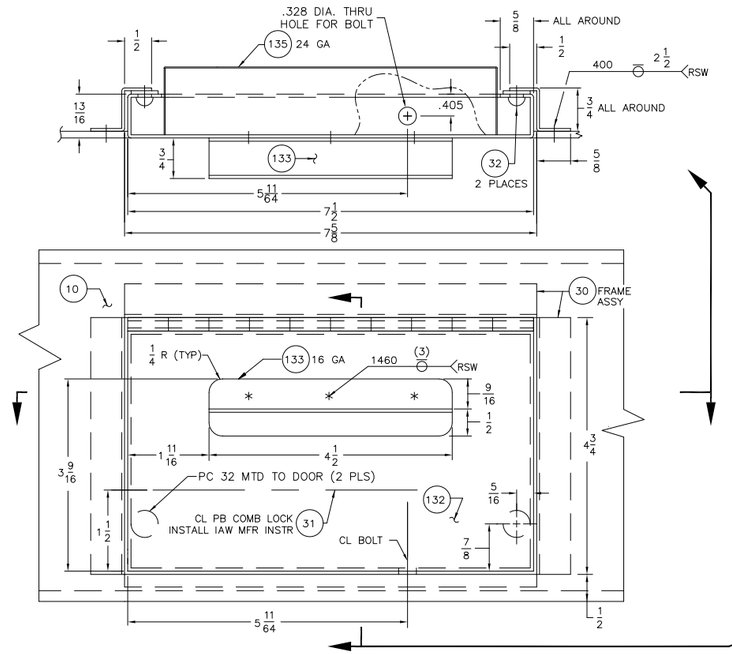

(*) DETAIL 59–D
DOOR – SM ART LKR
SCALE: 12 = 1 FT

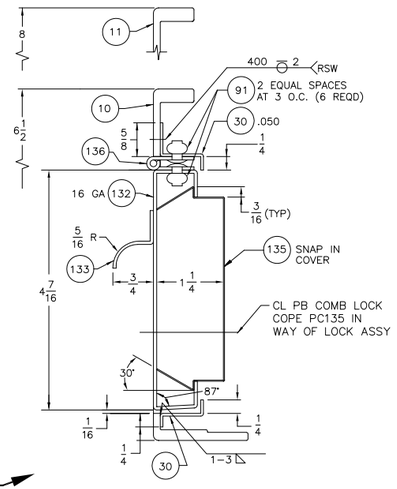

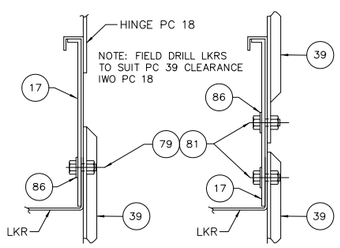

(*) SECTION 64–C (*) SECTION 63–C

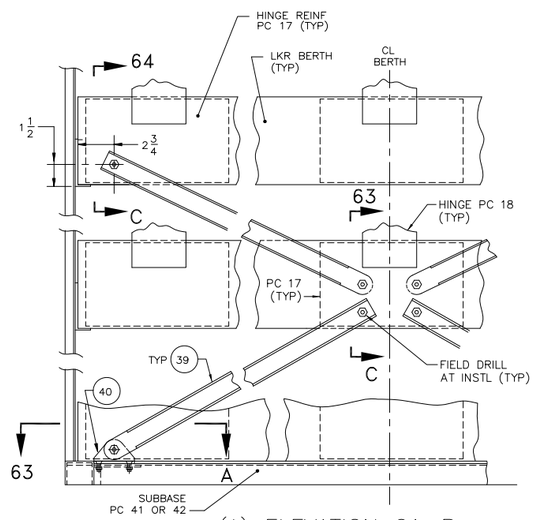

(*) ELEVATION 61–B
CROSS BRACE ASSEMBLY
LOOKING AT REAR OF LOCKER BERTH
SCALE: 3 = 1 FT

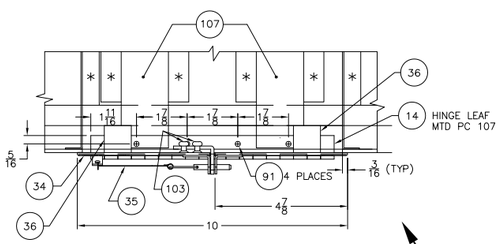

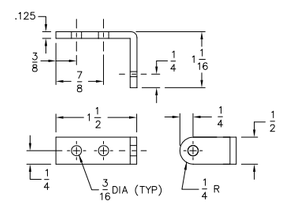

(*) DETAIL 57–C (138)
STAPLE
SCALE: 12 = 1 FT

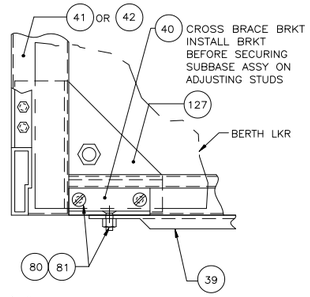

(*) SECTION 63–A

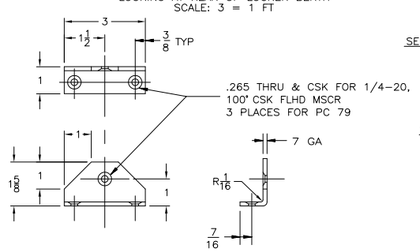

(*) DETAIL 62–A (40)
BRACKET–CROSS BRACE
SCALE: 6 = 1 FT

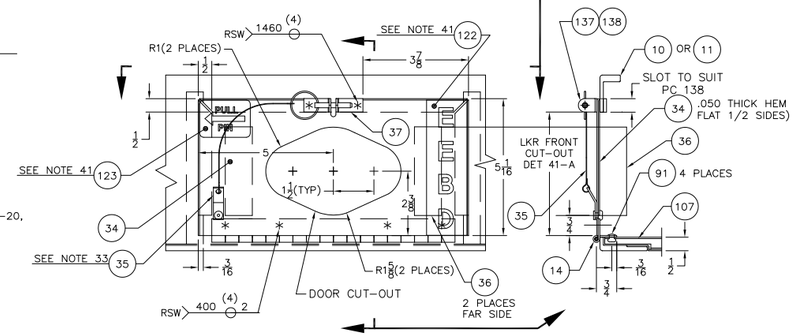

(*) DETAIL 59–A (34)
DOOR – EEBD STWG COMPT
SCALE: 6 = 1 FT

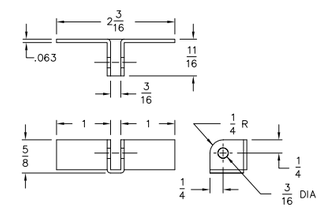

(*) DETAIL 57–A (137)
HASP
SCALE: 12 = 1 FT

SIZE	FSCM NO.	SWBS	NAVSEA DRAWING NO.	REV.
F	53711	804	5959312	B
SCALE: AS NOTED			SH. 8	

DRAWING NO. 804-5959312 SH. 8 REV. B

804-5959312, REV B, SH. 8

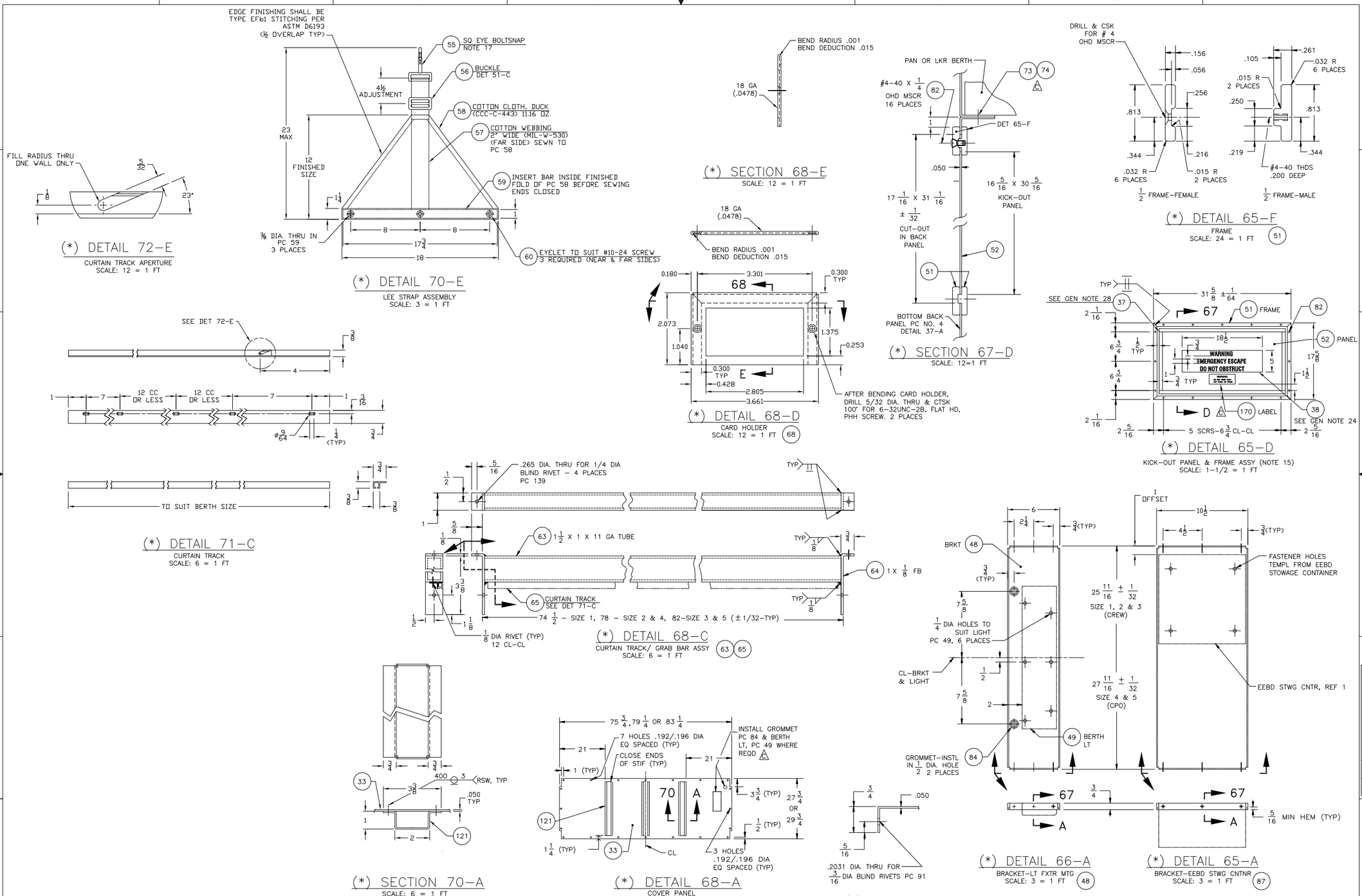

SIZE	FSCM NO.	SWBS	NAVSEA DRAWING NO.	REV.
F	53711	804	5959312	C
SCALE: AS NOTED		SH. 9		

DRAWING NO. 804-5959312 SH. 9 REV. C

804-5959312, REV C, SH. 9

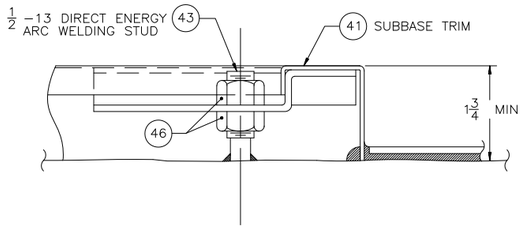

(*) DETAIL 79-E
SUBBASE INSTALLATION ON LEVEL DK (STEEL)
SCALE: 12=1 FT

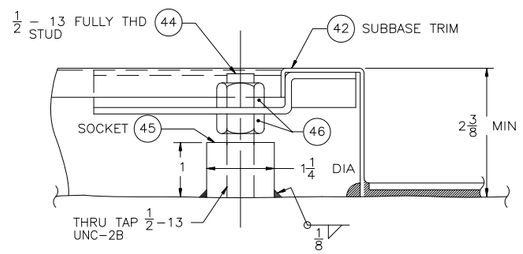

(*) DETAIL 79-D
SUBBASE INSTALLATION ON LEVEL DK (AL)
SCALE: 12=1 FT

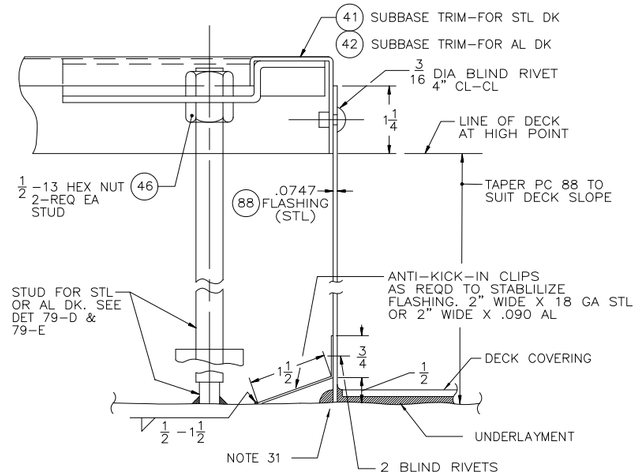

(*) DETAIL 79-B
INSTALLATION OF HIGH SUBBASE -NOTE 19 OR SUBBASE ON SLOPING DECK
SCALE: 12=1 FT

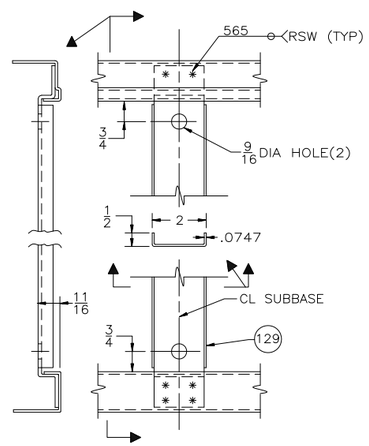

(*) DETAIL 78-D
SCALE: 6=1 FT

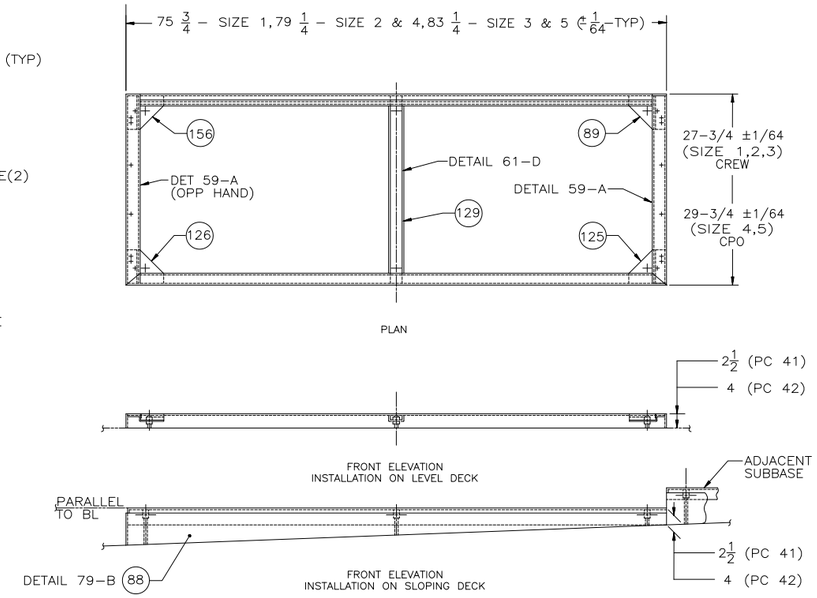

(*) DETAIL 75-D
SUBBASE ASSY
SCALE: 1-1/2=1 FT

(*) SECTION 77-B
SCALE: 6=1 FT

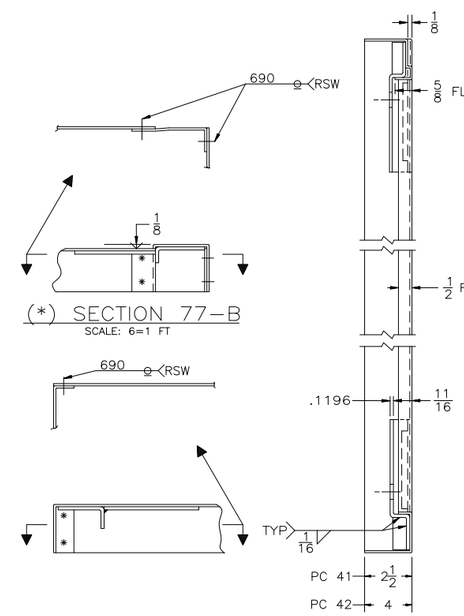

(*) SECTION 77-A
SCALE: 6=1 FT

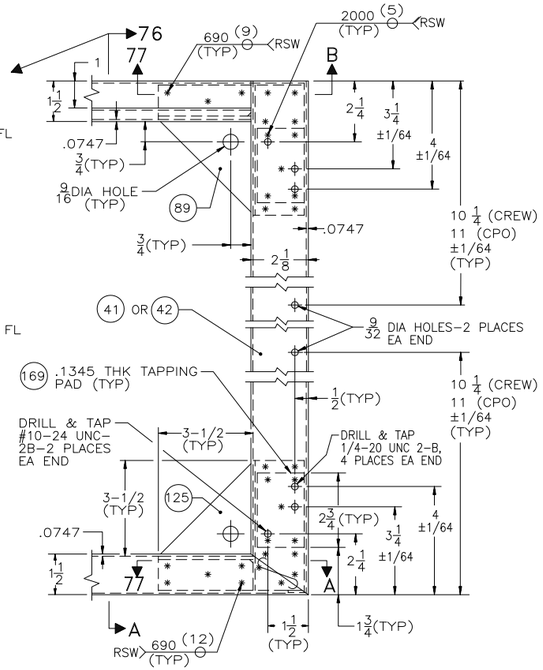

(*) SECTION 76-A
SCALE: 6=1 FT

(*) DETAIL 75-A
SCALE: 6=1 FT

SIZE	FSCM NO.	SWBS	NAVSEA DRAWING NO.	REV.
F	53711	804	5959312	B
SCALE: AS NOTED			SH. 10	

DRAWING NO. 804-5959312 SH 10 REV B

804-5959312 SH. 8

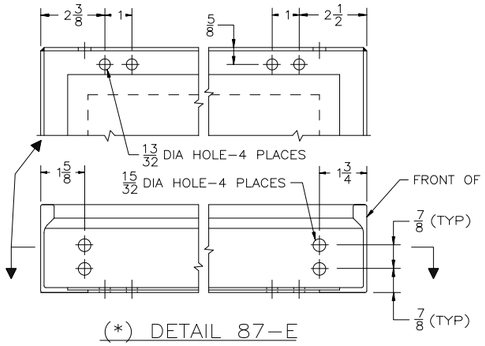

(*) DETAIL 87–E

PAN BERTH–MODIFICATION
RIGHT END SHOWN–LEFT END SIM & OPP
SCALE: 6=1 FT

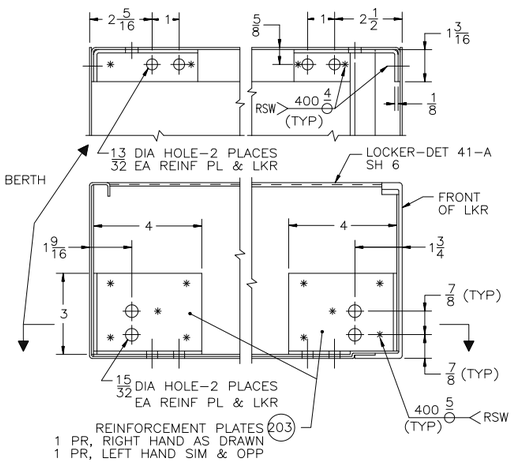

(*) DETAIL 85–D

BERTH LOCKER REINFORCEMENT PLATES
RIGHT HAND AS DRAWN, LEFT HAND SIM & OPP
SCALE: 6=1 FT

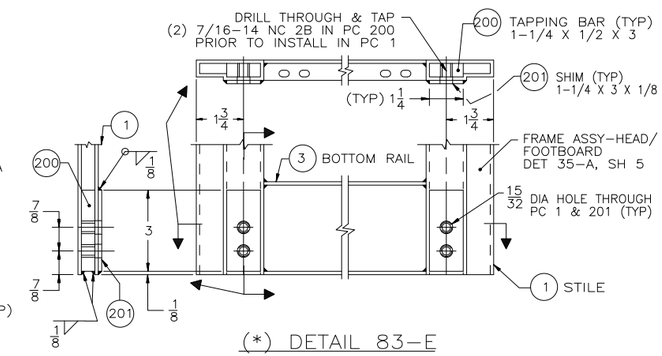

(*) DETAIL 83–E

HEAD/FOOTBOARD MODIFICATION
SCALE: 6=1 FT

HIGH IMPACT (H.I.) SHOCK NOTES

HI 1. THE CONTRACTOR/MANUFACTURER SHALL DETERMINE THE EXTENT OF BERTH UNIT DESIGN MODIFICATION AND DECK ATTACHMENT METHOD REQUIRED FOR PASSING HIGH IMPACT (H.I.) SHOCK TEST CRITERIA SPECIFIED WITHIN THE BERTH PROCUREMENT SPECIFICATION.

HI 2. DETAILS SHOWN ON THIS SHEET ARE SUGGESTED DESIGN MODIFICATIONS ONLY AND THEIR USAGE WITHIN ANY DESIGN FOR SHOCK CONCERNS DOES NOT WAIVE THE H.I. SHOCK TEST REQUIREMENT.

HI 3. MODIFICATIONS SHOWN ARE THOSE EMPLOYED DURING SHENANDOAH LABORATORIES, DIVISION OF HOPEMAN BROTHERS, INC. SHOCK TESTS OF PROTOTYPE BERTH ASSEMBLIES DETAILS 19–A & 19–C, SHEET 3 IN ACCORDANCE WITH MILITARY SPECIFICATION MIL–S–901, AS DESCRIBED IN SHENANDOAH LABORATORIES SHOCK TEST REPORTS NO. S–469 & S–470, DATED OCT 29 & NOV 20, 1985 RESPECTIVELY (EXCEPT AS DESCRIBED IN NOTE HI 4).

HI 4. CHOCKS, PC 206 ARE ADDED TO THE FOUR CORNER SUBBASE STUDS AS SHOWN IN DETAILS 84–B, 87–B & SECTION 83–A TO REINFORCE THE STUDS UNDER SHOCK LOAD AS INDICATED BY FAILURE OF THE STUDS AS DESCRIBED IN SHOCK TESTS PER NOTE HI 3.

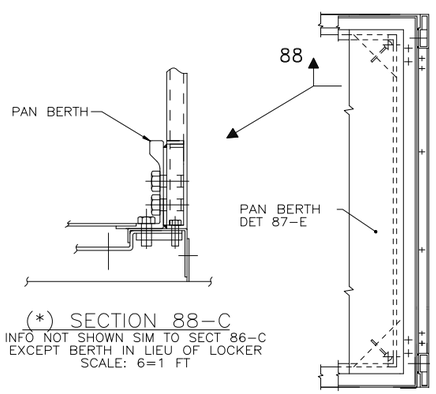

(*) SECTION 88–C

INFO NOT SHOWN SIM TO SECT 86–C
EXCEPT BERTH IN LIEU OF LOCKER
SCALE: 6=1 FT

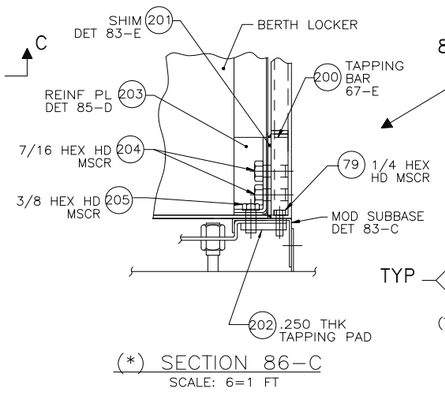

(*) SECTION 86–C

SCALE: 6=1 FT

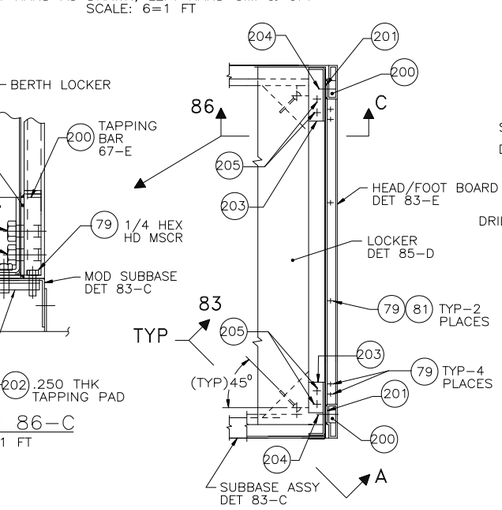

(*) DETAIL 84–B

HEAD/FOOTBOARD & BOTTOM LOCKER
ATTACHMENT TO SUBBASE
SCALE: 3=1 FT

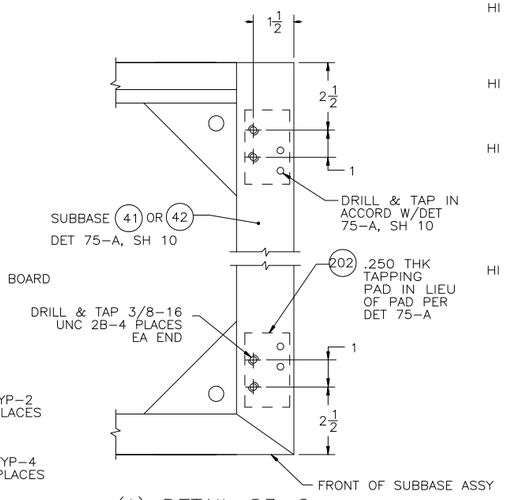

(*) DETAIL 83–C

SUBBASE MODIFICATION
RIGHT END SHOWN, LEFT END SIM & OPP
SCALE: 6=1 FT

(*) DETAIL 87–B

HEAD/FOOTBOARD & PAN BERTH
ATTACHMENT TO SUBBASE
ALL INFO NOT SHOWN SIM TO DET 84–B
EXCEPT PAN IN LIEU OF LOCKER
SCALE: 3=1 FT

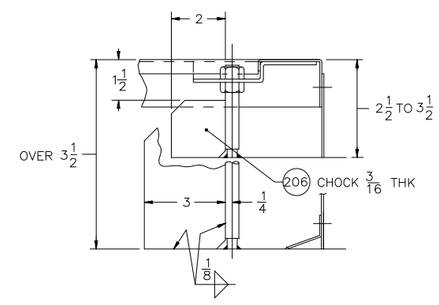

(*) SECTION 83–A

SUBBASE, OVER 2–1/2 HIGH
INSTALLATION, NOTE HI 4
SCALE: 6=1 FT

QTY	PC NO	DESCRIPTION	MATERIAL	MATL SPEC	REMARKS	ZONE	SH NO
4	206	CHOCK–3/16 PL	STEEL	ASTM–A36	FOR SUBBASE OVER 2–1/2 HIGH	83A	11
8	205	3/8–16 HEX HD MSCR	STL–ZINC CTD	COML	L=3/4"	84B	11
8	204	7/16–14 HEX HD MSCR	STL–ZINC CTD	COML	L=3/4"	84B	11
1 SET	203	REINF PLATE	AL 5052–H32	QQ–A–250/8	IN LKR	85D	11
4	202	TAPPING PAD	STEEL	ASTM–A36	ON SUBBASE	83C	11
4	201	SHIM	AL 5052–H32	QQ–A–250/8	IN HD/FT BD	83E	11
4	200	TAPPING BAR	AL 5052–H32	QQ–A–250/8	IN HD/FT BD	83E	11

(*) PARTS LIST (SUPPLEMENTAL–H.I. SHOCK)

SUGGESTED DESIGN & INSTALLATION DETAILS MOD FOR HIGH IMPACT SHOCK

SIZE	FSCM NO.	SWBS	NAVSEA DRAWING NO.	REV.
F	53711	804	5959312	B
SCALE: AS NOTED			SH. 11	

DRAWING NO. 804–5959312 SH. 11 REV. B

804–5959312 SH. 9

(*)DETAIL 92-F (130)

GAS SPRING BRACKET DOUBLER
CREW BERTH LOCKER
SCALE: 3 = 1 FT

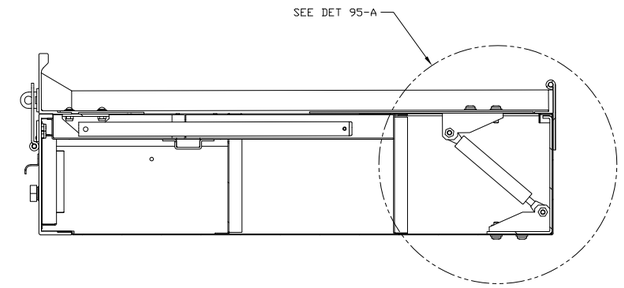

(*) SECTION 90-E

LOCKER LID LIFT ASSIST DEVICE
GAS SPRING FOR CREW LOCKER BERTH ONLY
SCALE: 3 = 1 FT

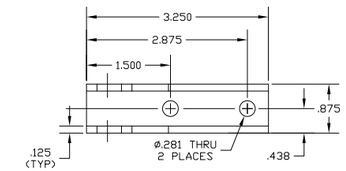

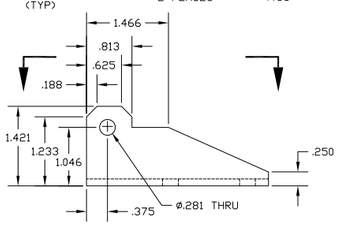

(*) DETAIL 95-C (131)

GAS SPRING BRACKET
CREW BERTH LOCKER
SCALE: 12 = 1 FT

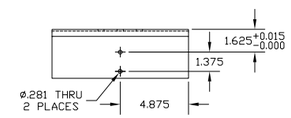

(*)DETAIL 93-D (128)

GAS SPRING HINGE REINFORCER
FRONT VIEW

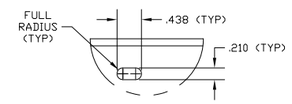

(*)DETAIL 92-D (128)

GAS SPRING HINGE REINFORCER
HOLE DETAIL
SCALE: 6= 1 FT

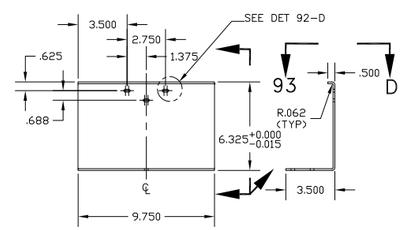

(*)DETAIL 93-C (128)

GAS SPRING HINGE REINFORCER
CREW BERTH LOCKER
SCALE: 3 = 1 FT

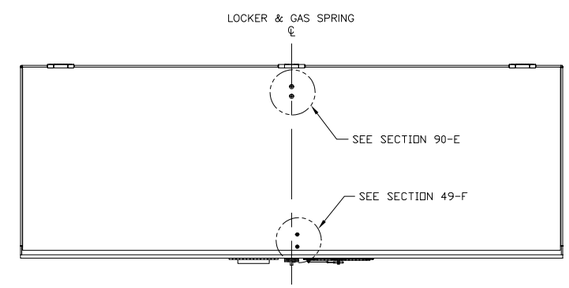

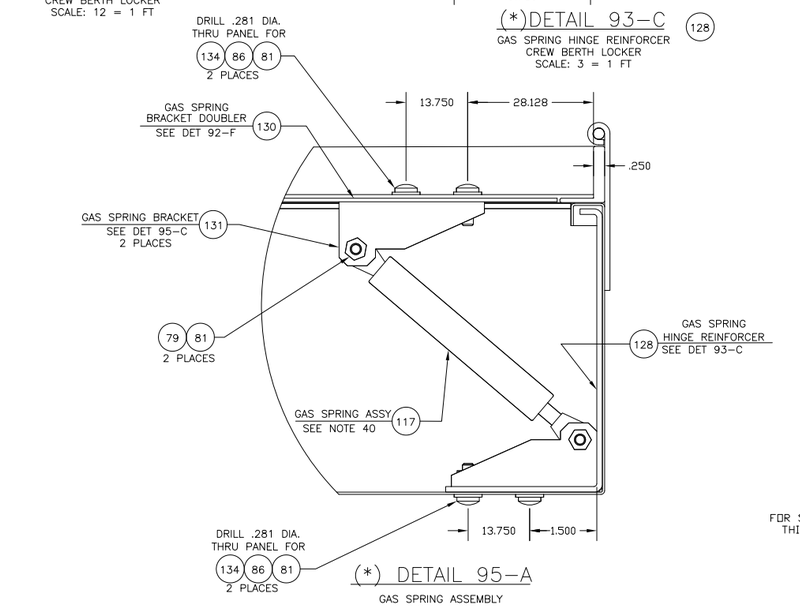

(*) DETAIL 95-A

GAS SPRING ASSEMBLY
INSTALLATION
SCALE: NONE

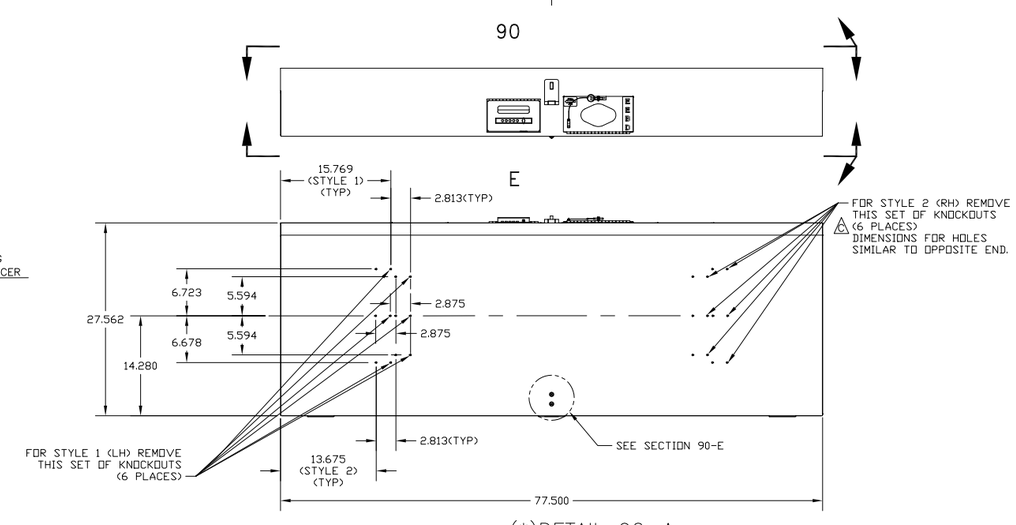

(*)DETAIL 90-A

BERTH LIGHT FIXTURE KNOCKOUT PATTERN
LOCKER BERTH SIZE 2, STYLE 1 AND 2
PAN BERTH & COVER PANEL SIMILAR
SCALE: 1 1/2 = 1 FT

SIZE	FSCM NO.	SWBS	NAVSEA DRAWING NO.	REV.
F	53711	804	5959312	C
SCALE: AS NOTED			SH. 12	

DRAWING NO. 804-5959312 SH 12 REV C

804-5959312, REV C, SH12

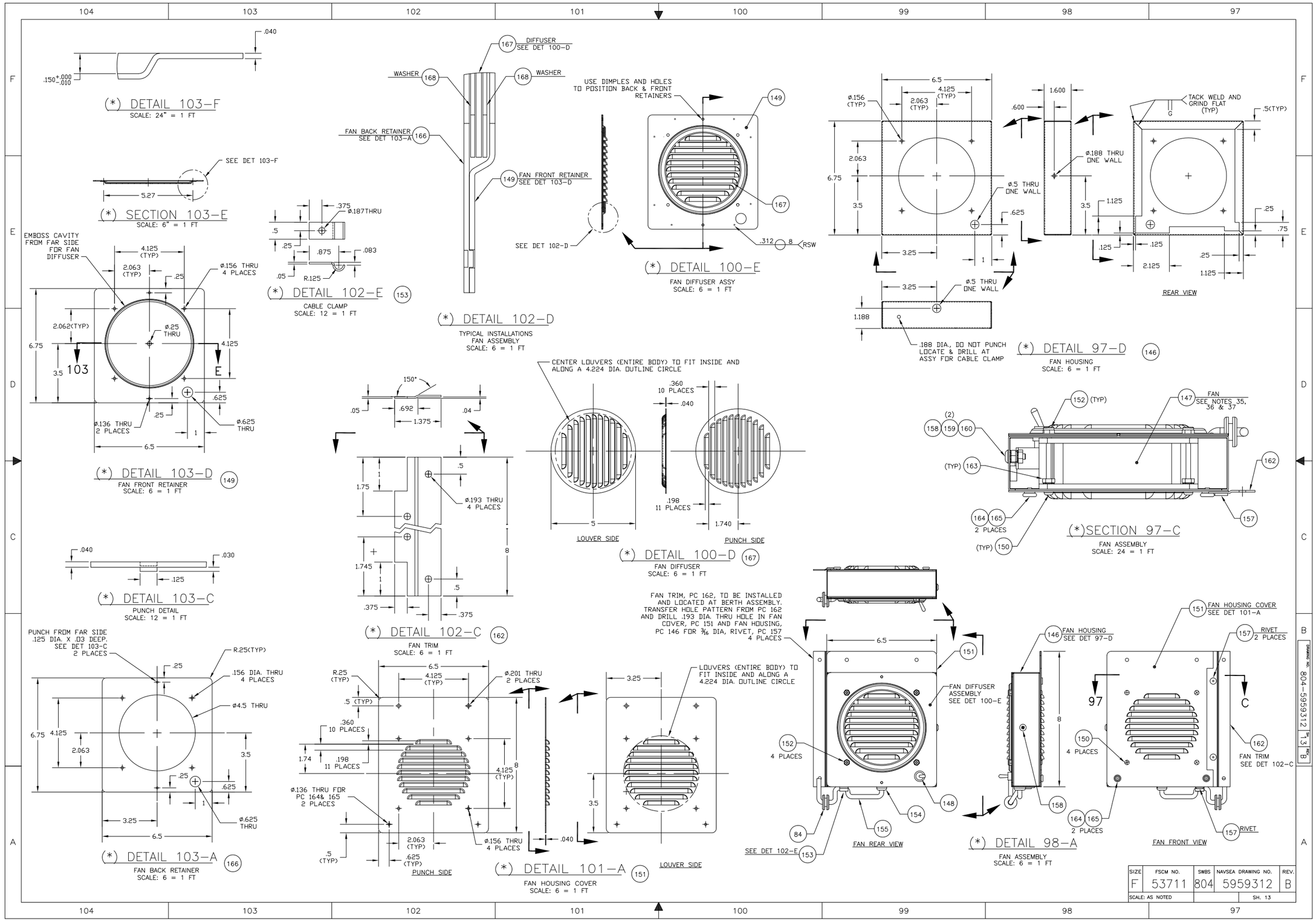
(*) DETAIL 103-F
SCALE: 24" = 1 FT
(*) SECTION 103-E
SCALE: 6" = 1 FT
(*) DETAIL 103-D
FAN FRONT RETAINER
SCALE: 6 = 1 FT
(*) DETAIL 103-C
PUNCH DETAIL
SCALE: 12 = 1 FT
(*) DETAIL 103-A
FAN BACK RETAINER
SCALE: 6 = 1 FT
(*) DETAIL 102-E
CABLE CLAMP
SCALE: 12 = 1 FT
(*) DETAIL 102-D
TYPICAL INSTALLATIONS
FAN ASSEMBLY
SCALE: 6 = 1 FT
(*) DETAIL 102-C
FAN TRIM
SCALE: 6 = 1 FT
(*) DETAIL 101-A
FAN HOUSING COVER
SCALE: 6 = 1 FT
(*) DETAIL 100-E
FAN DIFFUSER ASSY
SCALE: 6 = 1 FT
(*) DETAIL 100-D
FAN DIFFUSER
SCALE: 6 = 1 FT
(*) DETAIL 97-D
FAN HOUSING
SCALE: 6 = 1 FT
(*)SECTION 97-C
FAN ASSEMBLY
SCALE: 24 = 1 FT
(*) DETAIL 98-A
FAN ASSEMBLY
SCALE: 6 = 1 FT
FAN REAR VIEW
FAN FRONT VIEW
REAR VIEW
LOUVER SIDE
PUNCH SIDE
DIFFUSER SEE DET 100-D
WASHER
FAN BACK RETAINER SEE DET 103-A
FAN FRONT RETAINER SEE DET 103-D
SEE DET 102-D
USE DIMPLES AND HOLES TO POSITION BACK & FRONT RETAINERS
CENTER LOUVERS (ENTIRE BODY) TO FIT INSIDE AND ALONG A 4.224 DIA. OUTLINE CIRCLE
FAN TRIM, PC 162, TO BE INSTALLED AND LOCATED AT BERTH ASSEMBLY. TRANSFER HOLE PATTERN FROM PC 162 AND DRILL .193 DIA. THRU HOLE IN FAN COVER, PC 151 AND FAN HOUSING, PC 146 FOR 3/16 DIA, RIVET, PC 157 4 PLACES
LOUVERS (ENTIRE BODY) TO FIT INSIDE AND ALONG A 4.224 DIA. OUTLINE CIRCLE
FAN DIFFUSER ASSEMBLY SEE DET 100-E
FAN HOUSING SEE DET 97-D
FAN HOUSING COVER SEE DET 101-A
RIVET 2 PLACES
FAN TRIM SEE DET 102-C
FAN SEE NOTES 35, 36 & 37
TACK WELD AND GRIND FLAT (TYP)
.188 DIA., DO NOT PUNCH LOCATE & DRILL AT ASSY FOR CABLE CLAMP
SEE DET 102-E
SEE DET 103-F
EMBOSS CAVITY FROM FAR SIDE FOR FAN DIFFUSER
PUNCH FROM FAR SIDE .125 DIA. X .03 DEEP. SEE DET 103-C 2 PLACES
.156 DIA. THRU 4 PLACES
ø4.5 THRU
ø.156 THRU 4 PLACES
ø.625 THRU
ø.136 THRU 2 PLACES
ø.136 THRU FOR PC 164& 165 2 PLACES
ø.201 THRU 2 PLACES
ø.193 THRU 4 PLACES
ø.187THRU
ø.188 THRU ONE WALL
ø.5 THRU ONE WALL
R.25(TYP)
R.125
RSW
SIZE F
FSCM NO. 53711
SWBS 804
NAVSEA DRAWING NO. 5959312
REV. B
SCALE: AS NOTED
SH. 13

(*) GENERAL NOTES CONT'D

42. MOUNTING HOLES SHALL NOT BE PROVIDED ON BERTH LOCKERS OR BERTH PANS FOR:
    - PC 60; EYELET UNLESS LEES STRAP ASSEMBLIES ARE IDENTIFIED IN THE PROCUREMENT DOCUMENT.
    - PC 68; CARDHOLDER
    - PC 140; LONG BERTH LABEL PLATE

43. MOUNTING HOLES SHALL BE PROVIDED ON BERTH LOCKERS, BERTH PANS AND HEAD/FOOT BOARDS FOR THE ITEMS IDENTIFIED BELOW:
    - PC 48; BERTH LIGHTS
    - PC 53; STEP/LIFT HANDLE
    - PC 54; TOWEL BARS
    - PC 64; MOUNTING BRACKET FOR GRAB BAR/CURTAIN TRACK ASSY
    - PC 67; RING KEEPERS
    - PC 90; STEP/LIFT HANDLE

44. THE PAINT SYSTEM APPLIED TO THE MANUFACTURED SHEET METAL ITEMS SHALL BE TYPE I, EPOXY POWDER COATING IN ACCORDANCE WITH MIL-PRF-24712A.

45. UNLESS NOTED DIFFERENTLY ON THE PROCUREMENT DOCUMENT, FABRICATED METAL PIECES, SUBASSEMBLIES AND/OR BRACKETS INCLUDING BERTH LIGHT FIXTURE AND FAN ASSEMBLY SHALL RECEIVE PAINT COLOR NUMBER 26586 IN ACCORDANCE WITH FED-STD-595 WITH THE EXCEPTION TO SUBBASE ITEMS, WHICH SHALL RECEIVE COLOR NUMBER 17038, FED-STD-595.

46. ZINC COATED OR ZINC PLATED ITEMS SHALL NOT BE PAINTED.

47. THE BELOW LISTED ITEMS ARE INDUSTRIAL ACTIVITY FURNISHED (IAF) MATERIALS USED FOR THE INSTALLATION OF THE SUBBASE ASSEMBLY.
    - ANTI-KICK-IN-CLIPS, DETAIL 79-B
    - 3/16 INCH DIAMETER BLIND RIVETS, DETAIL 79-B
    - PC 43; STUD, WELDING, STEEL, MIL-S-24149/1D, TYPE II CL 1, 1/2-13UNC-2A
    - PC 44; STUD, FULLY THREADED, STEEL, ASTM-A307, GRADE A, 1/2-13UNC-2A
    - PC 45; SOCKET STUD, AL6061-Y651, ASTM-B221, TAP THROUGH, 1/2-13UNC-2B
    - PC 46; HEX NUT, STEEL, ZINC PLATED, COML, 1/2-13UNC-2B
    - PC 88; FLASHING, STEEL, ASTM-A366

48. INSTALL HINGE REINFORCER, PC 17, IN 3 PLACES AS PER DETAIL 41-A FOR ALL CHIEF PETTY OFFICER BERTH UNITS. INSTALL HINGE REINFORCER, PC 17, IN 2 PLACES AS PER DETAIL 41-A AND GAS SPRING HINGE REINFORCER, PC 128, IN 1 PLACE AS PER DETAIL 95-A FOR ALL CREW AND TROOP BERTH UNITS.

49. THE CHART BELOW REFLECTS TYPICAL WEIGHT VARIATIONSTO SUIT OPTIONAL FEATURES FOR CREW BERTHS SIZE 2 WITH 18 INCH CLEARANCE ABOVE THE MATTRESS TOPS.

BERTH DESCRIPTION	WEIGHT OF BASIC ASSY WITHOUT BACK PANELS & HD OR FT BOARD INSERT PANELS	OPTIONAL FEATURES		
		DIAGONAL BRACING	BACK PANELS	HD/FT BOARDS INSERT PANELS
		WT ADDED	WT ADDED	WT ADDED
3 HI, 3 LKR DET 19-A SH 1, TY I	307	6	25	8.4 EA HEAD OR FOOTBOARD
3 HI, 2 LKR DET 20-A SH 1, TY II	272	6	22	7.6 EA HEAD OR FOOTBOARD
3 HI, 1 LKR DET 22-A SH 1, TY III	235	5.6	20	6.9 EA HEAD OR FOOTBOARD
3 HI, 0 LKR DET 23-A SH 1, TY IV	222 (1)	5.6	17	6.1 EA HEAD OR FOOTBOARD

(1) 20 POUNDS ADDED FOR FLASHING AND INCREASED DECKSTUD LENGTH FOR 7 INCH HIGH SUBBASE. NOTE 19

50. APPLY WARNING LABEL PLATES, PC 170, ON BOTH SIDES OF THE KICK-OUT PANEL PC 52. CENTER WARNING LABEL PLATES ON THE BOTTOM PORTION OF THE KICK-OUT PANEL AS SHOWN IN DETAIL 65-D. ATTACH WARNING LABEL PLATES, PC 170, TO THE KICK-OUT PANEL, PC 52, WITH 3M VHB FLAME RETARDANT TAPE 5958FR OR EQUAL.

51. WARNING LABEL PLATES, PC 170, SHALL BE ENGRAVED ALUMINUM WITH BLACK LETTERING IN ACCORDANCE WITH REFERENCES 5 AND 6 EXCEPT THAT LABEL PLATES SHALL BE ATTACHED TO THE KICK-OUT PANEL, PC 52, WITH THE 3M VHB FR TAPE OR EQUAL AS SPECIFIED IN GENERAL NOTE 50 IN LIEU OT THE ADHESIVES NOTED IN REFERENCE 6.

52. IN ORDER TO ACCOMODATE THE GREATER THICKNESS OF INNERSPRING MATTRESSES, INCREASE THE DIMENSIONS REFERRING TO THIS NOTE BY 1 INCH FOR CREW, TROOP AND CPO BERTHS.

53. IN ORDER TO ACCOMODATE THE GREATER THICKNESS OF INNERSPRING MATTRESSES, INCREASE THE DIMENSIONS REFERRING TO THIS NOTE AS FOLLOWS:

    FOR TYPE I, II, II, IV AND TYPE X, XI, AND XII BERTHS, ADD 3 INCHES.
    FOR TYPE V BERTHS, ADD 4 INCHES.
    FOR TYPE VI, VII, VIII, AND TYPE XIII, XIV AND XV BERTHS, ADD 2 INCHES.

54. MAGAZINE RACK, PC 171, SHALL BE PROVIDED ON NEW CONSTRUCTION SHIPS. FOR EXISTING SHIPS, MAGAZINE RACKS ARE OPTIONAL UNLESS ORIGINALLY OUTFITTED.

55. GROMMET, PC 172, SHALL BE MID ALANTIC RUBBER COMPANY PART NO. 2867 OR EQUAL.

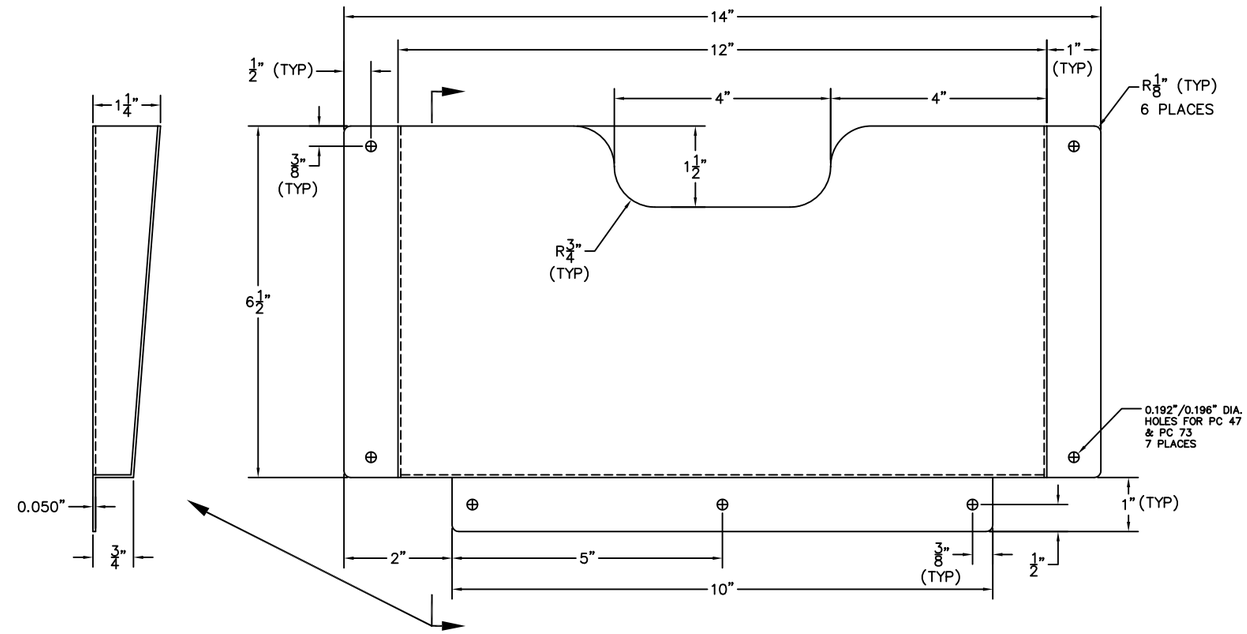

(*) DETAIL 106-D (171)

MAGAZINE RACK
SCALE: FULL

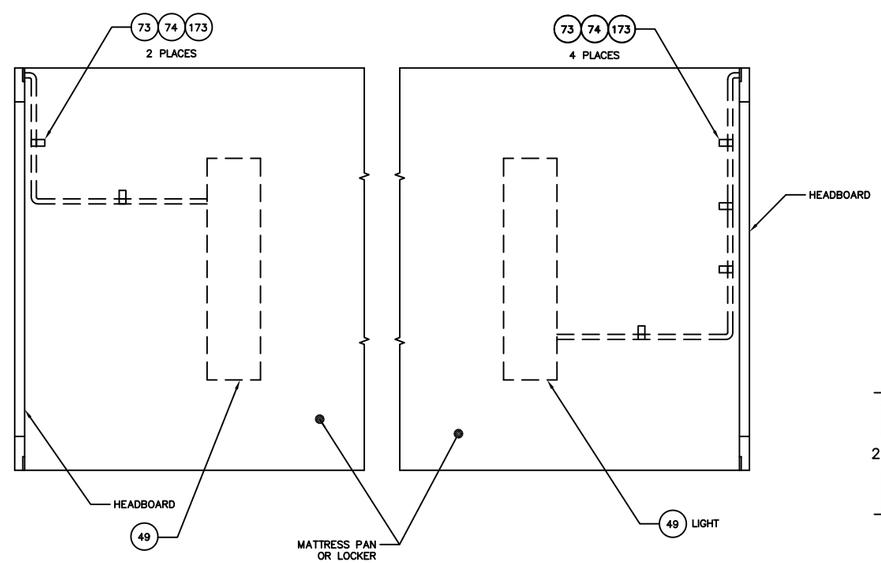

LH BERTH ONLY

RH BERTH ONLY

(*) DETAIL 108-A

BERTH LIGHT CABLE
SCALE: NONE

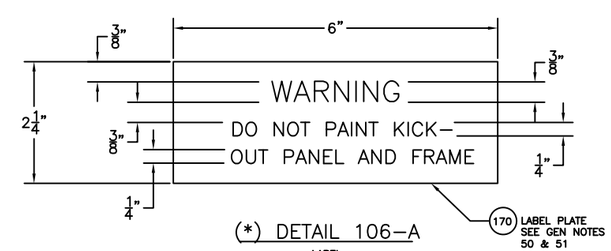

(*) DETAIL 106-A

LABEL
SCALE: FULL

SIZE	FSCM NO.	SWBS	NAVSEA DRAWING NO.	REV.
F	53711	804	5959312	C
SCALE: AS NOTED			SH. 14	

DRAWING NO. 804-5959312 SH 14 REV C

804-5959312, REV. C, SH. 14