## GENERAL NOTES

1. PRESSURE VESSEL DESIGN CONDITIONS
   DESIGN PRESSURE: 100 PSIG
   SERVICE TEMPURATURE RANGE: 33°F–99°F
   FLUID: RANGES FROM FRESH WATER TO SEA WATER WITH
   UP TO 60,000 MG/LITER TOTAL DISSOLVED SOLIDS.

2. HYDROTEST AT 130 PSIG FOR 30 MINUTES. INSPECT ALL JOINTS AND CONNECTIONS FOR DEFECTS UNDER PRESSURE. THERE SHALL BE NO VISIBLE LEAKS OR WEEPING.

3. NO CODE STAMP REQUIRED PER ASME BOILER PRESSURE AND VESSEL CODE, SECTION VIII, DIVISION 1, U–((c)(2)(f)).

4. ALL STEEL SHALL BE DUPLEX STAINLESS STEEL, UNS S32205, AND SHALL CONFORM TO ASTM SPECIFICATION A240 (PLATE/SHEET/STRIP), A276/A479 (BAR), A790/A928 (PIPE), A789 (TUBING), A815 (FITTINGS), A923 (TESTING) OF MOST RECENT ISSUE UNLESS NOTED OTHERWISE. UNS S31803 IS NOT AN ACCEPTABLE SUBSTITUTE FOR UNS S32205.

5. ALL MATERIAL CERTIFICATIONS (CERTS) SHALL BE PROVIDED.

6. ALL PIPING TO BE SEAMLESS.

7. SHOP PREPARATION SHALL SEPARATE DUPLEX STAINLESS STEEL AND CARBON STEEL FABRICATION. AVOID AT ALL TIMES THE CONTAMINATION OF DUPLEX STAINLESS STEEL WITH CARBON STEEL OR OTHER IMPURITIES, ESPECIALLY DURING LIFTING AND MOVING WITH FORKLIFTS. DO NOT MIX HAND TOOLS, GRINDING WHEELS, ETC. BETWEEN DUPLEX STAINLESS STEEL AND CARBON STEEL FABRICATION.

8. WELDING NOTES

   A. WELDING FOR STRUCTURAL STEEL SHALL CONFORM TO THE FOLLOWING STRUCTURAL WELDING CODES: AWS D1.1, AWS D1.6, AWS D18.11, AND AWS D10.18 OF LATEST EDITION.

   B. USE A FILLER METAL THAT CONFORMS TO SPECIFICATION AWS A5.4 E 2209–XX, AWS A5.9 ER 2209, AWS A5.22 E 2209T0–X. ALL FLUX SHALL BE DESIGNED FOR DUPLEX STAINLESS STEEL.

   C. PRIOR TO WELDING, ALL BURRS SHALL BE REMOVED TO ALLOW FOR COMPLETE FUSION. JOINT SURFACES SHALL BE DEGREASED AND FREE FROM ANY FORM OF CONTAMINATION. THE ROOT SIDE AND FACE SIDE OF THE BASE MATERIAL SHALL BE CLEANED A MINIMUM OF 2" BACK ON EITHER SIDE OF THE JOINT WITH A STAINLESS STEEL WIRE BRUSH OR SANDING DISK AND THEN WIPE CLEAN WITH A CLEANING SOLVENT SUCH AS ACETONE OR MINERAL SPIRITS.

   D. SEQUENCE OF WELDING SHALL BE SUCH AS TO MINIMIZE THE RESIDUAL STRESSES IN THE STEEL.

   E. WELDING JOINTS SHOULD BE PREPARED WITH THE ATTENSION TO SURFACE PREPARATION, EDGE PREPARATION, ALIGNMENT, AND ROOT PASS SPEDING. NO TACK WELDS SHALL BE USED AT THE STARTING POINT OF THE ACTUAL ROOT PASS WELD.

   F. ALL GROOVE WELDS MUST HAVE THROUGH PENETRATION AND ABSOLUTE FUSION.

   G. DURING WELDING, EXCESSIVE WEAVING AND WIDE MOLTEN POOLS SHALL BE AVOIDED TO PREVENT EXCESSIVE HIGH HEAT INPUT AND HIGH STRESSES. EXTREMELY LOW HEAT INPUTS WITH RAPID QUENCHING SHALL BE AVOIDED TO PREVENT PREDOMINANTLY FERRITIC HEAT–AFFECTED ZONES. THE WELDING ARC SHALL NOT BE STRUCK OUSIDE OF THE WELDING BEVEL OR JOINT.

   H. AFTER WELDING, ALL SLAG, WELD SPLATTER, AND OXIDES SHALL BE REMOVED. MECHANICAL CLEANING WITH STEEL BRUSHES OR AN ABRASIVE BLASTING MEDIUM CAPABLE OF TRANSFERRING IRON SHALL BE AVOIDED.

   I. AUSTENITIC FILLER METALS CAN BE USED FOR DISSIMILAR METAL WELDS OF DUPLEX STAINLESS STEEL TO AUSTENITIC GRADES.

   J. THE FERRITE CONTENT OF ALL ACCESSIBLE COMPLETED PRODUCTION WELDS ON THE WELD DEPOSIT ONLY SHALL BE CHECKED USING A FERRITESCOPE. A MINIMUM OF THREE TESTS SHALL BE MADE ON EACH 5 FEET OF WELD. THE AVERAGE VALUE OF THE FERRITESCOPE READINGS ON EACH WELD SHALL BE 25% TO 65%. FERRITE CONTENT LIMITS SHALL BE:
   - IN THE BASE METAL, 30% TO 65%;
   - IN THE HEAT AFFECTED ZONE (HAZ), 40% TO 65%;
   - IN THE WELD DEPOSITE, 25% TO 60%.

   K. PRIOR TO FABRICATION, PROVIDE A DETAILED WELDING PROCEDURE SPECIFICATION TO PROGRAM MANAGER AND LEAD DESIGN ENGINEER. A REPORT OF THE WELDING PROCESS USED, INCLUDING THE PROCESS CONDITIONS, SHALL BE SUPPLIED WITH THE DELIVERY OF THE FINISHED PRODUCT.

9. CLEAN AND PASSIVATE IN ACCORDANCE WITH ASTM A380 AND ASTM A967. QUALITY TEST AND ACCEPTANCE CRITERIA USING COPPER SULFATE TEST PER ASTM A967. PRIOR TO PASSIVATION, PROVIDE A DETAILED PASSIVATION SPECIFICATION & PROCESS TO PROGRAM MANAGER AND LEAD DESIGN ENGINEER. A REPORT OF THE PROCESS AND TESTS USED, INCLUDING THE PROCESS CONDITIONS, SHALL BE SUPPLIED WITH THE DELIVERY OF THE FINISHED PRODUCT.

10. REMOVE ALL ROUGH EDGES AND CORNERS ON ALL STEEL.

11. THE APPROXIMATE WEIGHT OF THE PRESSURE VESSEL IS 600 LBS.

12. ON SITE INSPECTION FOR COMPLIANCE WITH ALL REQUIREMENTS IN THE DRAWINGS WILL BE PERFORMED BY A GOVERNMENT REPRESENTATIVE BEFORE SHIPMENT.

## ABBREVIATIONS

AR: AS REQUIRED
PV: PRESSURE VESSEL
SST: STAINLESS STEEL
UNO: UNLESS NOTED OTHERWISE
W.P.: WORKING POINT

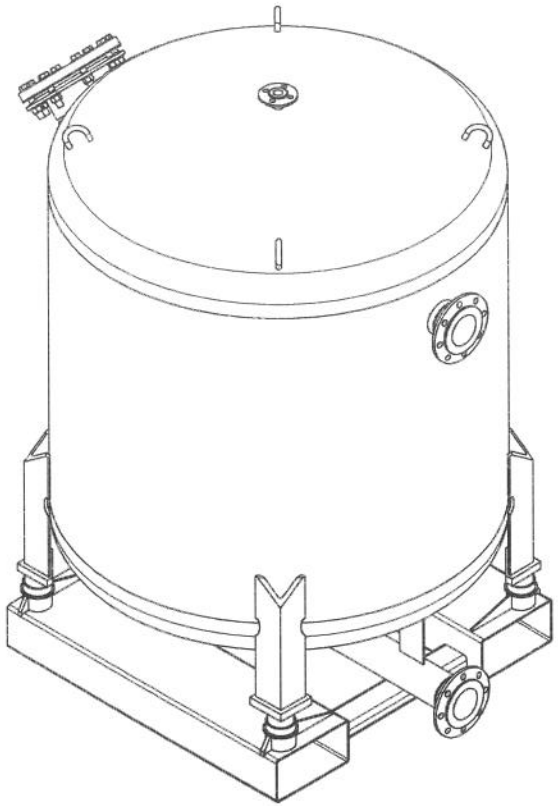

**54" I.D. PRESSURE VESSEL, ISOMETRIC VIEW**
**FOR REFERENCE ONLY**

| | |
|---|---|
| TOLERANCES: | |
| .X DECIMALS | ±.03 |
| .XX DECIMALS | ±.01 |
| .XXX DECIMALS | ±.005 |
| FRACTIONS | ±1/8 |
| ANGLES | ±1° |

NEXT ASSY:

20121601

NAVAL FACILITIES ENGINEERING SERVICE CENTER

JK TWPS
MEDIA FILTER

F 80091

J2011-39

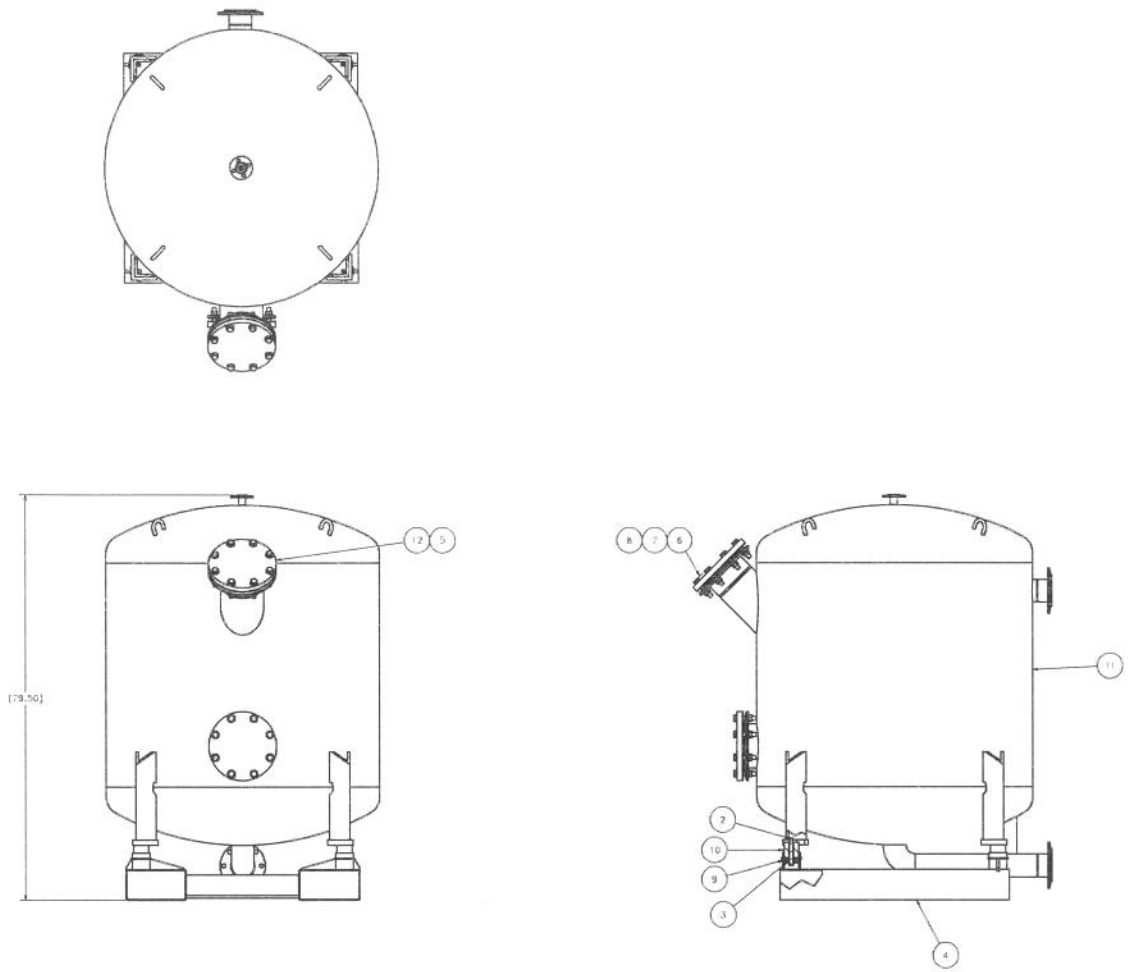


① MEDIA FILTER

## NOTES

1. SEE GENERAL NOTES ON SHEET 20121601.
2. FOR THREADED FASTENERS, USE MARINE GRADE ANTI-SIEZE THAT ALSO CONTAINS A CALCIUM SULFONATE THICKENER. A SUGGESTED PRODUCT IS BOSTIC NMBT-8.

| QTY | ITE | PART NUMBER | DESCRIPTION | MANUFACTUR | SPEC | MATERIAL |
|---|---|---|---|---|---|---|
| 2 | 12 | 20121602-12 | [illegible] | | [illegible] | [illegible] |
| | 11 | 20121603- | [illegible] | | | |
| 4 | 10 | 20121610-4 | [illegible] | | [illegible] | [illegible] |
| 4 | 9 | 20121610-5 | [illegible] | | [illegible] | [illegible] |
| 6 | 8 | [illegible] | [illegible] | | [illegible] | [illegible] |
| 12 | 7 | [illegible] | [illegible] | | [illegible] | [illegible] |
| 6 | 6 | [illegible] | [illegible] | | [illegible] | [illegible] |
| 2 | 5 | 20121602-5 | [illegible] | | [illegible] | [illegible] |
| | 4 | 20121603- | [illegible] | | | |
| 4 | 3 | 20121610-6 | [illegible] | | [illegible] | [illegible] |
| 4 | 2 | 20121602-2 | [illegible] | | [illegible] | [illegible] |
| | | 20121602- | [illegible] | | | |

PARTS LIST

| | | | |
|---|---|---|---|
| TOLERANCES: | | | |
| .X DECIMALS | ±.03 | | |
| .XX DECIMALS | ±.01 | | |
| .XXX DECIMALS | ±.005 | | |
| FRACTIONS | ±1/8 | | |
| ANGLES | ±1° | | |

NEXT ASSY.

20121602

NAVAL FACILITIES ENGINEERING SERVICE CENTER

3K TWPS

MEDIA FILTER

FINAL ASSEMBLY

F 80091

J2011-39

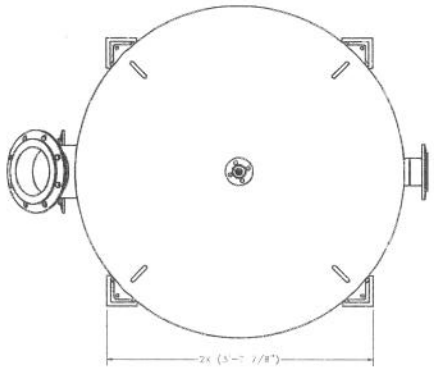


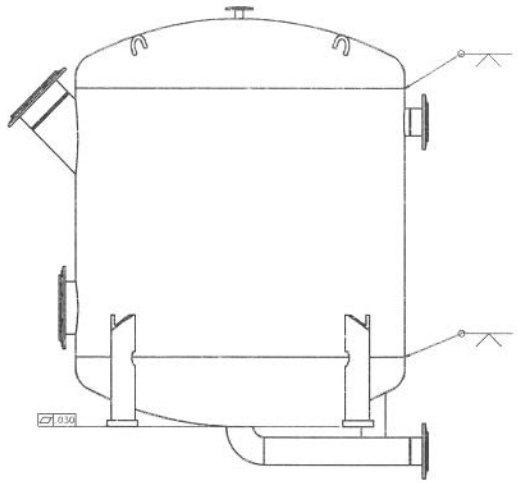


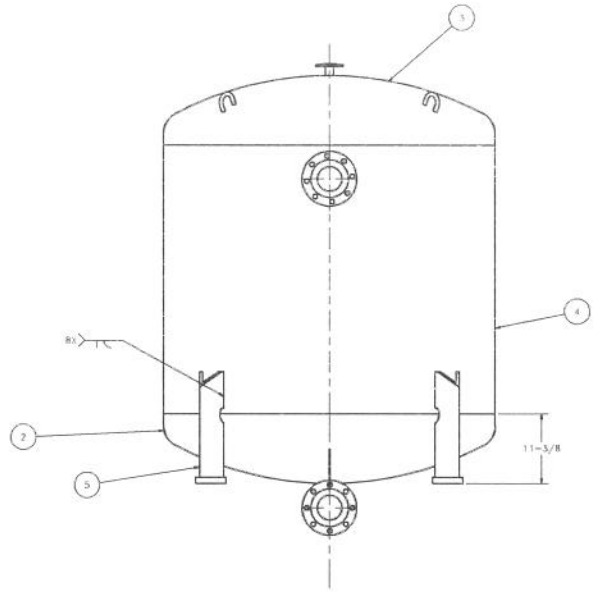


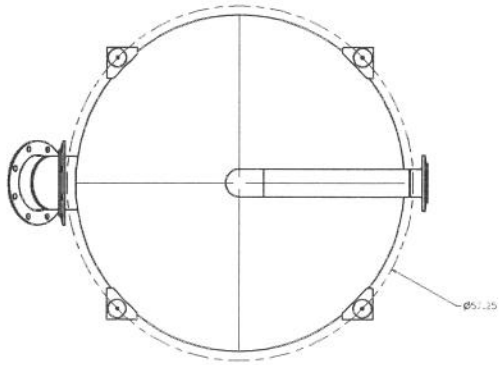


1 MEDIA CHAMBER WELDMENT

NOTES:

1. SEE GENERAL NOTES ON SHEET 20121601.

| QTY | ITE | PART NUMBER | DESCRIPTION | MANUFACTUR | SPEC | MATERIAL |
|---|---|---|---|---|---|---|
| 1 | 5 | 20121604-1 | [illegible] | | | |
| 1 | 4 | 20121604-1 | [illegible] | | | |
| 1 | 3 | 20121603-1 | [illegible] | | | |
| 1 | 2 | 20121602-1 | [illegible] | | | |
| | | 20121601-1 | [illegible] | | | |

PARTS LIST

| | | |
|---|---|---|
| -1 | 20121602-1 | NEXT ASSY. |

TOLERANCES:
X DECIMALS ±.03
XX DECIMALS ±.01
XXX DECIMALS ±.005
FRACTIONS ±1/8
ANGLES ±1°

20121603

NAVAL FACILITIES ENGINEERING SERVICE CENTER

3K TWPS
MEDIA FILTER
MEDIA CHAMBER WELDMENT

F 80091

J2011-39

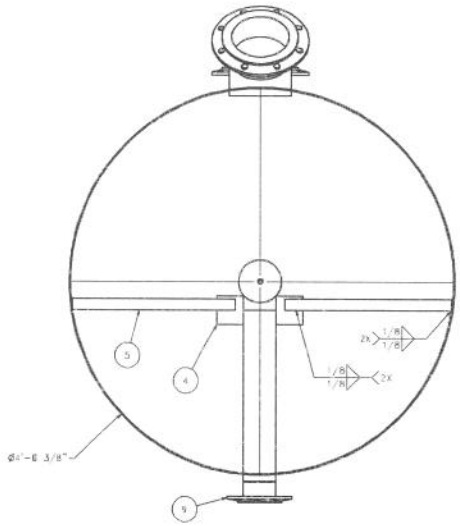


## NOTES

1. SEE GENERAL NOTES ON SHEET 20121601.

(2) LOCATION OF SHELL SEAM IS OPTIONAL. LOCATE ALL FITTINGS AND SHELL PENETRATIONS A MINIMUM OF 4" AWAY FROM SHELL SEAM WELD.

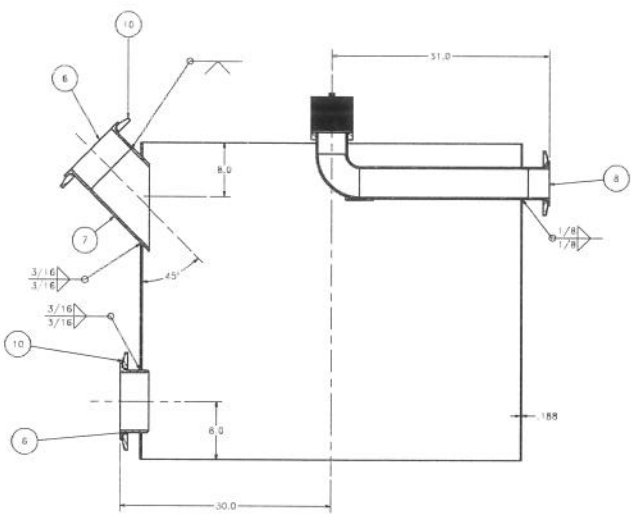


SECTION AK-AK
SCALE 0.14 : 1

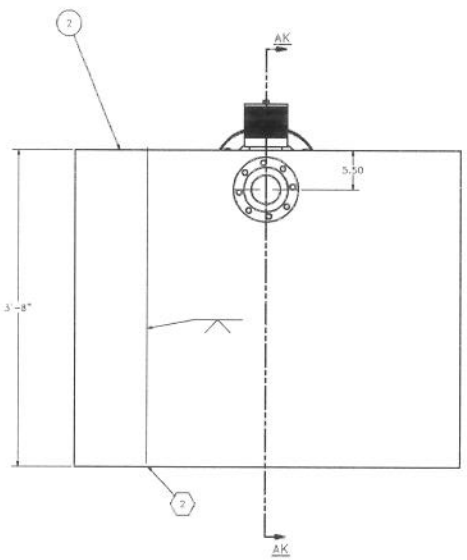


(1) SHELL WELDMENT

| QTY | ITE | PART NUMBER | DESCRIPTION | MANUFACTUR | SPEC | MATERIAL |
|---|---|---|---|---|---|---|
| 2 | [illegible] | 20121601-10 | [illegible] | | [illegible] | [illegible] |
| 1 | 5 | 20121601-9 | [illegible] | | [illegible] | [illegible] |
| 1 | 8 | 20121604-8 | [illegible] | | [illegible] | [illegible] |
| 1 | [illegible] | 20121601- | PIPE, Ø8" X 10.00", [illegible] | | [illegible] | [illegible] |
| 2 | 6 | 20121601-6 | [illegible] | | [illegible] | [illegible] |
| 2 | 5 | 20121604-5 | PLATE, [illegible] | | [illegible] | [illegible] |
| 1 | [illegible] | 20121601-1 | [illegible] | | [illegible] | [illegible] |
| 1 | 3 | 20121601-1 | [illegible] | [illegible] | | |
| 1 | [illegible] | 20121604-2 | [illegible] | | [illegible] | [illegible] |
| | | 20121604-1 | SHELL WELDMENT | | | |

PARTS LIST

| | | | |
|---|---|---|---|
| -1 | 20121603-1 | NEXT ASSY. | |

TOLERANCES:
X DECIMALS ±.03
XX DECIMALS ±.01
XXX DECIMALS ±.005
FRACTIONS ±1/8
ANGLES ±1°

20121604

NAVAL FACILITIES ENGINEERING SERVICE CENTER

3K TWPS
MEDIA FILTER
SHELL WELDMENT

F 80091

J2011-39

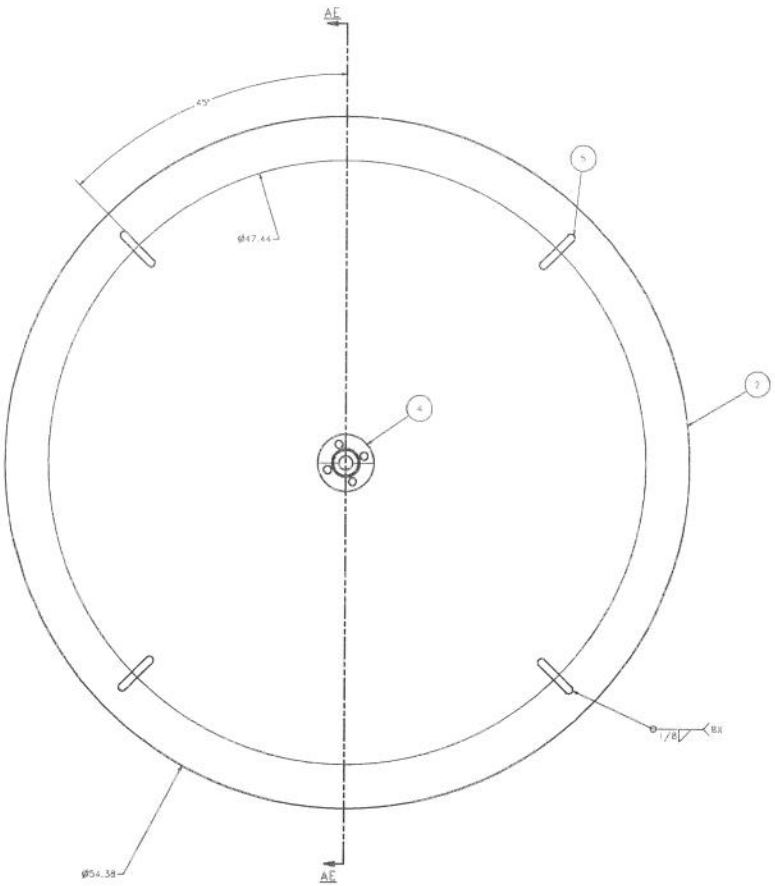


① HEAD, TOP, WELDMENT

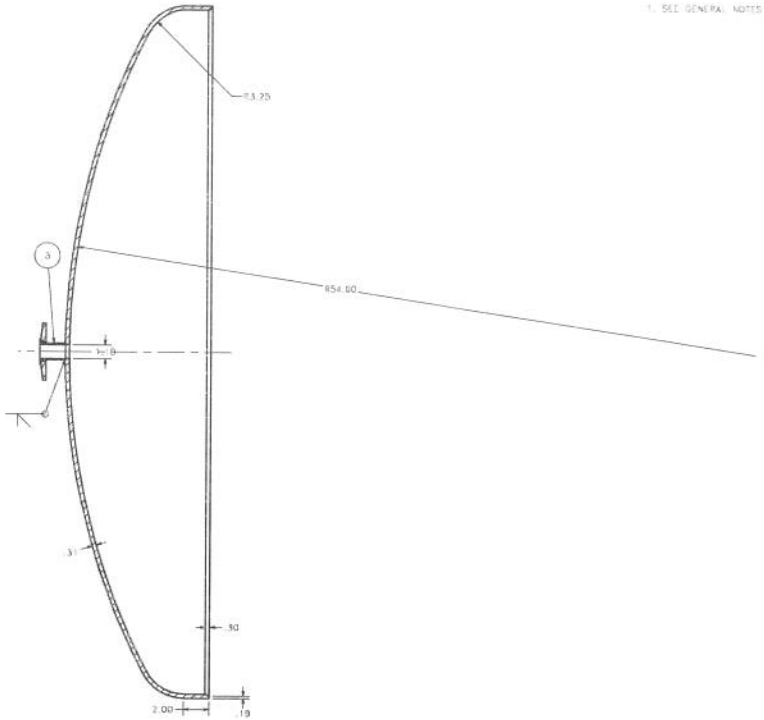


SECTION AE-AE
SCALE 1 / 4

NOTES

1. SEE GENERAL NOTES ON SHEET 20121601.

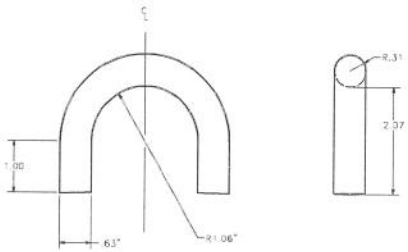


⑤ TIE-DOWN LUG

| QTY | ITE | PART NUMBER | DESCRIPTION | MANUFACTUR | SPEC | MATERIAL |
|---|---|---|---|---|---|---|
| 1 | 5 | 20121603-5 | [illegible] | | | [illegible] |
| 1 | 4 | 20121603-4 | [illegible] | | [illegible] | [illegible] |
| 1 | 3 | 20121603-3 | [illegible] | | [illegible] | [illegible] |
| 1 | 2 | 20121603-2 | [illegible] | | | [illegible] |
| | | 20121603-1 | [illegible] | | | |

PARTS LIST

| | | |
|---|---|---|
| -1 | 20121603-1 | |
| QTY | NEXT ASSY. | |

TOLERANCES:

| | |
|---|---|
| .X DECIMALS | ±.03 |
| .XX DECIMALS | ±.01 |
| .XXX DECIMALS | ±.005 |
| FRACTIONS | ±1/8 |
| ANGLES | ±1° |

J2011-39

20121605

NAVAL FACILITIES ENGINEERING SERVICE CENTER

3K TWPS

MEDIA FILTER

HEAD, TOP, WELDMENT

F 90091

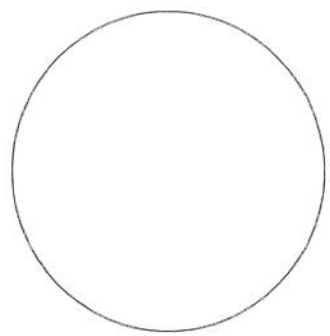

6 MEDIA BED FILTER GRID ASSEMBLY

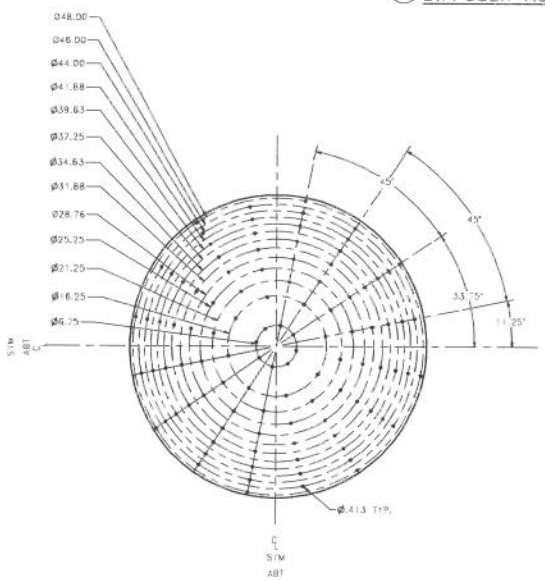


2 DIFFUSER PLATE

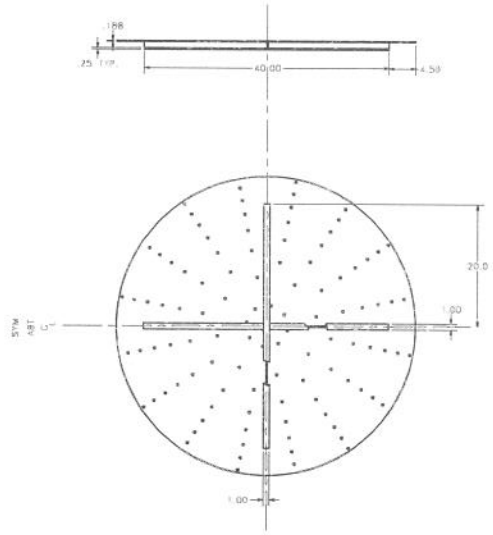


2 DIFFUSER ASSEMBLY

NOTES

1. SEE GENERAL NOTES ON SHEET 20121601.

2. MEDIA BED FILTER GRID ASSEMBLY SPECIFICATIONS:
   - ALL MATERIAL DUPLEX 2205 (UNS S32205). UNS S31803 IS NOT AN ACCEPTABLE SUBSTITUTE FOR UNS S32205.
   - MEDIA BED FILTER GRID DIAMETER: 51-7/8" O.D.
   - SLOT SHAPE: #90VEE-WIRE (WEDGE WIRE)
     SLOT SIZE: 0.005" ±0.002"
   - PERIMETER BAND: 2" HIGH X 1/4" THICK
   - SINGLE PIECE CONSTRUCTION
   - BEARING SUPPORT STRENGTH SHOULD BE SIZED FOR 10 PSI (GRID SHOULD SUPPORT 10 PSI PRESSURE ON ITS OWN. NO MID BEAM SUPPORT WILL BE PROVIDED)

3. MEDIA BED FILTER GRID ASSEMBLY SUGGESTED VENDORS:

   HENDRICK SCREEN COMPANY
   OWENSBORO, KY
   MR. WILLIAM FLOWERS
   (270) 685-5138
   willie.flowers@hendrickscreenco.com
   www.hendrickscreenco.com

   FEDERAL SCREEN PRODUCTS INC.
   MR. STEVE HAMILTON
   (905) 677-4171
   steve@federalscreen.com
   www.federalscreen.com

   CONCORD SCREEN INC.
   MS. LORRAINE WALL
   (905) 669-5950
   lwall@concordscreen.com
   www.concordscreen.com

   JOHNSON SCREENS(R)
   NEW BRIGHTON, MN
   MR. STEVEN DEHN
   (651) 638-3117
   steven.dehn@johnsonscreens.com
   www.johnsonscreens.com

4. A THORUGH INSPECTION OF THE MEDIA SUPPORT GRID SHOULD BE PERFORMED BEFORE AND AFTER FABRICATION OF THE FILTER PRESSURE VESSEL. THE MEDIA SUPPORT GRID CONTAINS PRECISELY SLOTTED OPENINGS THAT ARE USED TO RETAIN 0.25 TO 0.35 MM SAND (0.010 TO 0.014 IN). FABRICATION PROCESSES AND WELDING PROCEDURES SHALL NOT AFFECT THE SLOT OPENINGS. BYPASS OF THE MEDIA DOWNSTREAM IS EXTREMELY DETRIMENTAL TO PUMPS, VALVES AND OTHER PROCESS COMPONENTS.

5. GOVERNMENT FURNISHED EQUIPMENT (GFE)

| QTY | ITE | PART NUMBER | DESCRIPTION | MANUFACTUR | SPEC | MATERIAL |
|---|---|---|---|---|---|---|
| 1 | | 20121608-2 | [illegible] | | [illegible] | [illegible] |
| 1 | | 20121608-1 | [illegible] | | [illegible] | [illegible] |

PARTS LIST

| | | |
|---|---|---|
| -2 | 20121606-1 | |
| -1 | 20121606-1 | |
| NEXT ASSY. | | |

TOLERANCES:

| | |
|---|---|
| X DECIMALS | ±.03 |
| XX DECIMALS | ±.01 |
| .XXX DECIMALS | ±.005 |
| FRACTIONS | ±1/8 |
| ANGLES | ±1° |

20121608

NAVAL FACILITIES ENGINEERING SERVICE CENTER

3K TWPS

MEDIA FILTER

DIFFUSER & MEDIA BED

F 80091

22811-39

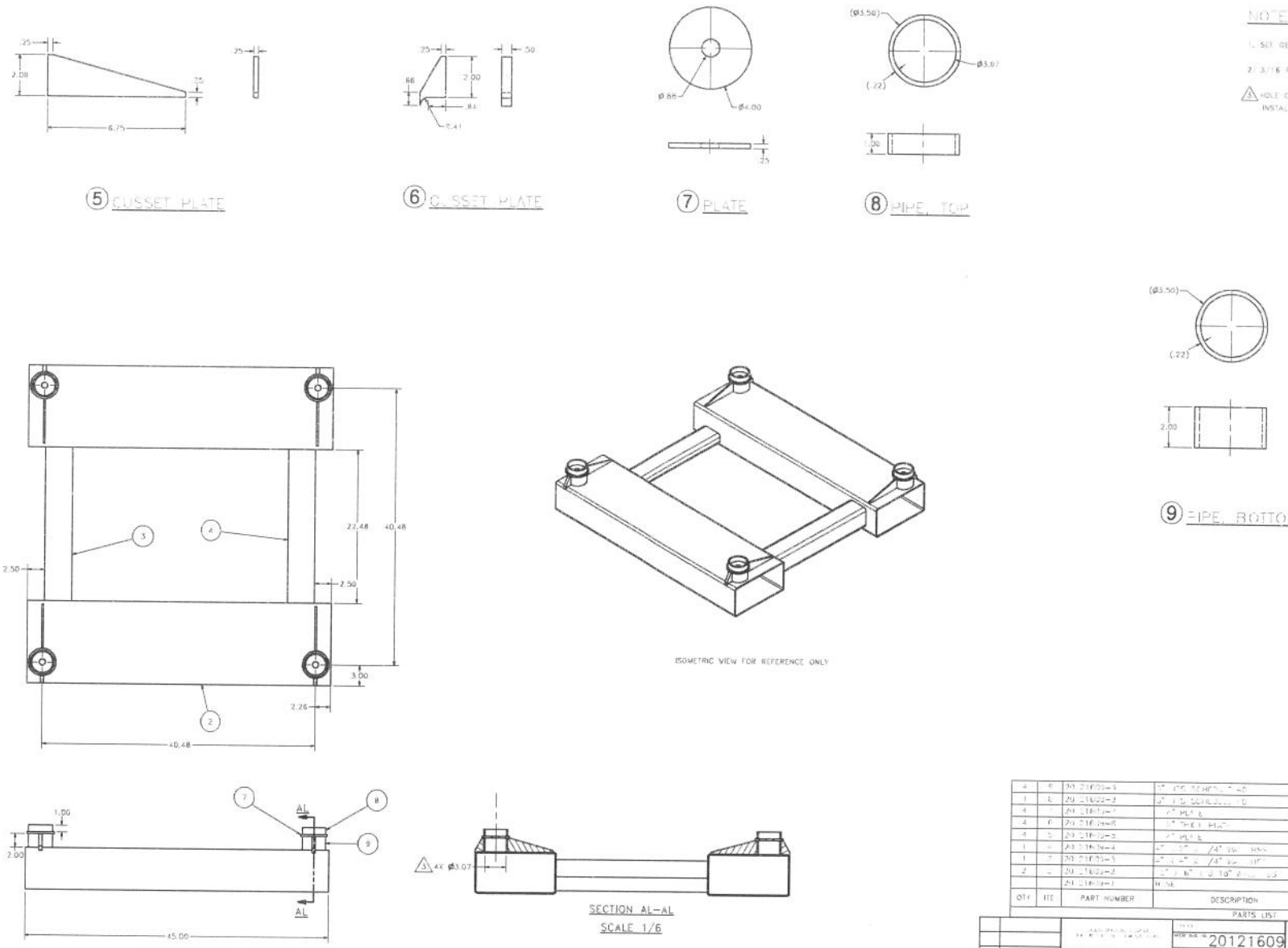


NOTES

1. SEE GENERAL NOTES ON SHEET 20121601.
2. 3/16 FILLET WELD ALL PIECES.
3. HOLE CUT IN RECTANGULAR TUBING TO ALLOW INSTALLATION OF SHOCK MOUNT.

| QTY | ITE | PART NUMBER | DESCRIPTION | MANUFACTUR | SPEC | MATERIAL |
|---|---|---|---|---|---|---|
| 4 | 9 | 20121609-9 | [illegible] | | [illegible] | [illegible] |
| 1 | 8 | 20121609-8 | [illegible] | | [illegible] | [illegible] |
| 4 | 7 | 20121609-7 | [illegible] | | [illegible] | [illegible] |
| 4 | 6 | 20121609-6 | [illegible] | | [illegible] | [illegible] |
| 4 | 5 | 20121609-5 | [illegible] | | [illegible] | [illegible] |
| 1 | 4 | 20121609-4 | [illegible] | | [illegible] | [illegible] |
| 1 | 3 | 20121609-3 | [illegible] | | [illegible] | [illegible] |
| 2 | 2 | 20121609-2 | [illegible] | | [illegible] | [illegible] |
| | | 20121609-1 | BASE | | | |

PARTS LIST

| | | | |
|---|---|---|---|
| TOLERANCES | | | |
| .X DECIMALS | ±.03 | | |
| .XX DECIMALS | ±.01 | | |
| .XXX DECIMALS | ±.005 | | |
| FRACTIONS | ±1/8 | | |
| ANGLES | ±1° | | |

| | |
|---|---|
| -1 | 20121602-1 |
| NEXT ASSY | |

20121609

NAVAL FACILITIES ENGINEERING SERVICE CENTER

3K TWPS

MEDIA FILTER

BASE

F 80091

J2011-39

OLD VESSEL

## NOTES

1. SEE GENERAL NOTES ON SHEET 20121601.

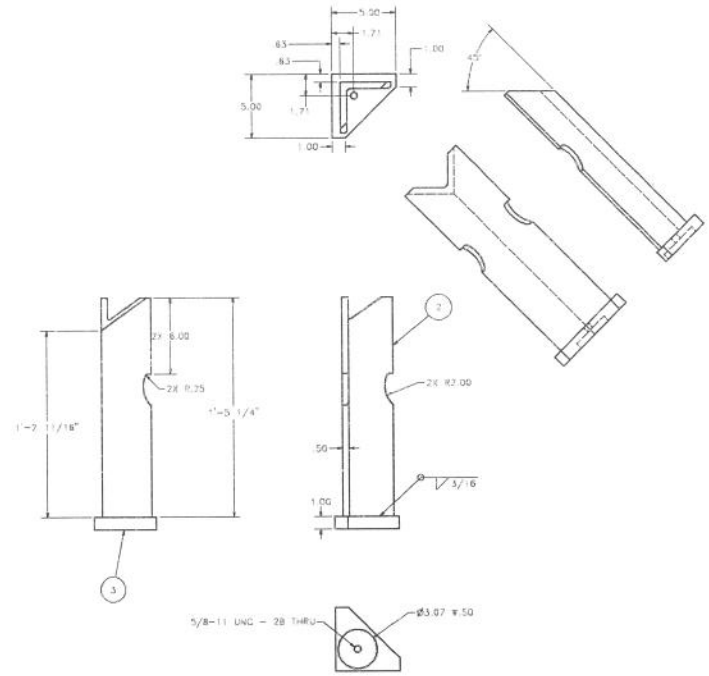


① LEG ASSEMBLY

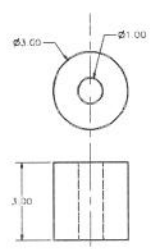


④ SHOCK MOUNT

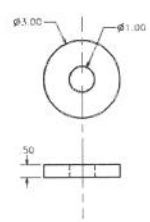


⑤ SHOCK MOUNT

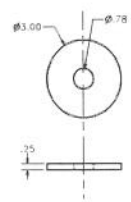


⑥ WASHER

| QTY | ITE | PART NUMBER | DESCRIPTION | MANUFACTUR | SPEC | MATERIAL |
|---|---|---|---|---|---|---|
| | 6 | 20121610-6 | SHOCK MOUNT [illegible] | | [illegible] | [illegible] |
| | 5 | 20121610-5 | [illegible] | | [illegible] | [illegible] |
| | 4 | 20121610-4 | [illegible] | | [illegible] | [illegible] |
| 1 | 3 | 20121610-3 | [illegible] | | [illegible] | [illegible] |
| 1 | 2 | 20121610-2 | [illegible] | | [illegible] | [illegible] |
| | | 20121610-1 | LEG ASSEMBLY | | | |

PARTS LIST

| | | | |
|---|---|---|---|
| -6 | 20121602-1 | TOLERANCES: | |
| -5 | 20121602-1 | .X DECIMALS | ±.03 |
| -4 | 20121602-1 | .XX DECIMALS | ±.01 |
| -1 | 20121603-1 | .XXX DECIMALS | ±.005 |
| | NEXT ASSY. | FRACTIONS | ±1/8 |
| | | ANGLES | ±1° |

20121610

NAVAL FACILITIES ENGINEERING SERVICE CENTER

3K TWPS

MEDIA FILTER

LEG ASSEMBLY

F 80091

J2011-39

## GENERAL NOTES

1. PRESSURE VESSEL DESIGN CONDITIONS
   DESIGN PRESSURE: 100 PSIG
   SERVICE TEMPURATURE RANGE: 33°F–85°F
   FLUID: RANGES FROM FRESH WATER TO SEA WATER WITH
   UP TO 60,000 MG/LITER TOTAL DISSOLVED SOLIDS.

2. HYDROTEST AT 150 PSIG FOR 30 MINUTES. INSPECT ALL JOINTS AND CONNECTIONS FOR DEFECTS UNDER PRESSURE. THERE SHALL BE NO VISIBLE LEAKS OR WELPING.

3. NO CODE STAMP REQUIRED PER ASME BOILER PRESSURE AND VESSEL CODE, SECTION VIII, DIVISION 1, U-1(e)(2)(1).

4. ALL STEEL SHALL BE DUPLEX STAINLESS STEEL, UNS S32205, AND SHALL CONFORM TO ASTM SPECIFICATION A240 (PLATE/SHEET/STRIP), A276/A479 (BAR), A790/A928 (PIPE), A789 (TUBING), A815 (FITTINGS), A923 (TESTING) OF MOST RECENT ISSUE UNLESS NOTED OTHERWISE. UNS S31803 IS NOT AN ACCEPTABLE SUBSTITUTE FOR UNS S32205.

5. ALL MATERIAL CERTIFICATIONS (CERTS) SHALL BE PROVIDED.

6. ALL PIPING TO BE SEAMLESS.

7. SHOP PREPARATION SHALL SEPARATE DUPLEX STAINLESS STEEL AND CARBON STEEL FABRICATION. AVOID AT ALL TIMES THE CONTAMINATION OF DUPLEX STAINLESS STEEL WITH CARBON STEEL OR OTHER IMPURITIES, ESPECIALLY DURING LIFTING AND MOVING WITH FORKLIFTS. DO NOT MIX HAND TOOLS, GRINDING WHEELS, ETC. BETWEEN DUPLEX STAINLESS STEEL AND CARBON STEEL FABRICATION.

8. WELDING NOTES

   A. WELDING FOR STRUCTURAL STEEL SHALL CONFORM TO THE FOLLOWING STRUCTURAL WELDING CODES. AWS D1.1, AWS D1.6, AWS D10.11, AND AWS D10.18 OF LATEST EDITION.

   B. USE A FILLER METAL THAT CONFORMS TO SPECIFICATION AWS A5.4 E 2208-XX, AWS A5.9 ER 2209, AWS A5.22 E 2209T0-X. ALL FLUX SHALL BE DESIGNED FOR DUPLEX STAINLESS STEEL.

   C. PRIOR TO WELDING, ALL BURRS SHALL BE REMOVED TO ALLOW FOR COMPLETE FUSION. JOINT SURFACES SHALL BE DEGREASED AND FREE FROM ANY FORM OF CONTAMINATION. THE ROOT SIDE AND FACE SIDE OF THE BASE MATERIAL SHALL BE CLEANED A MINIMUM OF 2" BACK ON EITHER SIDE OF THE JOINT WITH A STAINLESS STEEL WIRE BRUSH OR SANDING DISK AND THEN WIPE CLEAN WITH A CLEANING SOLVENT SUCH AS ACETONE OR MINERAL SPIRITS.

   D. SEQUENCE OF WELDING SHALL BE SUCH AS TO MINIMIZE THE RESIDUAL STRESSES IN THE STEEL.

   E. WELDING JOINTS SHOULD BE PREPARED WITH THE ATTENSION TO SURFACE PREPARATION, EDGE PREPARATION, ALIGNMENT, AND ROOT PASS SPECING. NO TACK WELDS SHALL BE USED AT THE STARTING POINT OF THE ACTUAL ROOT PASS WELD.

   F. ALL GROOVE WELDS MUST HAVE THROUGH PENETRATION AND ABSOLUTE FUSION.

   G. DURING WELDING, EXCESSIVE WEAVING AND WIDE MOLTEN POOLS SHALL BE AVOIDED TO PREVENT EXCESSIVE HIGH HEAT INPUT AND HIGH STRESSES. EXTREAMLY LOW HEAT INPUTS WITH RAPID QUENCHING SHALL BE AVOIDED TO PREVENT PREDOMINANTLY FERRITIC HEAT-AFFECTED ZONES. THE WELDING ARC SHALL NOT BE STRUCK OUSIDE OF THE WELDING BEVEL OR JOINT.

   H. AFTER WELDING, ALL SLAG, WELD SPLATTER, AND OXIDES SHALL BE REMOVED. MECHANICAL CLEANING WITH STEEL BRUSHES OR AN ABRASIVE BLASTING MEDIUM CAPABLE OF TRANSFERRING IRON SHALL BE AVOIDED.

   I. AUSTENITIC FILLER METALS CAN BE USED FOR DISSIMILAR METAL WELDS OF DUPLEX STAINLESS STEEL TO AUSTENITIC GRADES.

   J. THE FERRITE CONTENT OF ALL ACCESSIBLE COMPLETED PRODUCTION WELDS ON THE WELD DEPOSIT ONLY SHALL BE CHECKED USING A FERRITESCOPE. A MINIMUM OF THREE TESTS SHALL BE MADE ON EACH 5 FEET OF WELD. THE AVERAGE VALUE OF THE FERRITESCOPE READINGS ON EACH WELD SHALL BE 25% TO 65%. FERRITE CONTENT LIMITS SHALL BE:
   – IN THE WELD DEPOSIT, 25% TO 60%.

   K. PRIOR TO FABRICATION, PROVIDE A DETAILED WELDING PROCEDURE SPECIFICATION TO PROGRAM MANAGER AND LEAD DESIGN ENGINEER. A REPORT OF THE WELDING PROCESS USED, INCLUDING THE PROCESS CONDITIONS, SHALL BE SUPPLIED WITH THE DELIVERY OF THE FINISHED PRODUCT.

9. CLEAN, PICKLE, AND PASSIVATE THE VESSEL INTERIOR AND EXTERIOR IN ACCORDANCE WITH ASTM A380. FOLLOWING CLEANING, ACID PICKLING SHALL BE PERFORMED USING A SOLUTION OF NITRIC AND HYDROFLORIC ACIDS CODE B IN TABLE A1.1 ASTM A380. PASSIVATION SHALL BE PERFORMED USING A NITRIC ACID SOLUTION CODE F TABLE 2.1, ASTM A380. QUALITY TEST AND ACCEPTANCE CRITERIA USING COPPER SULFATE TEST PER ASTM A967. PRIOR TO CONDUCTING THE CLEANING, PICKLING, AND PASSIVATION PROCEDURES PROVIDE A DETAILED PROCESS SPECIFICATION TO PROGRAM MANAGER AND LEAD DESIGN ENGINEER FOR APPROVAL. A REPORT OF THE PROCESS AND TESTS USED, INCLUDING THE PROCESS CONDITIONS,CONCENTRATION, TEMPERATURE AND TIME SHALL BE SUPPLIED WITH THE DELIVERY OF THE FINISHED PRODUCT.

10. REMOVE ALL ROUGH EDGES AND CORNERS ON ALL STEEL.

11. THE APPROXIMATE WEIGHT OF THE PRESSURE VESSEL IS 1900 LBS.

12. ON SITE INSPECTION FOR COMPLIANCE WITH ALL REQUIREMENTS IN THE DRAWINGS WILL BE PERFORMED BY A GOVERNMENT REPRESENTATIVE BEFORE SHIPMENT.

## ABBREVIATIONS

AR: AS REQUIRED
PV: PRESSURE VESSEL
SST: STAINLESS STEEL
UNO: UNLESS NOTED OTHERWISE
W.P.: WORKING POINT

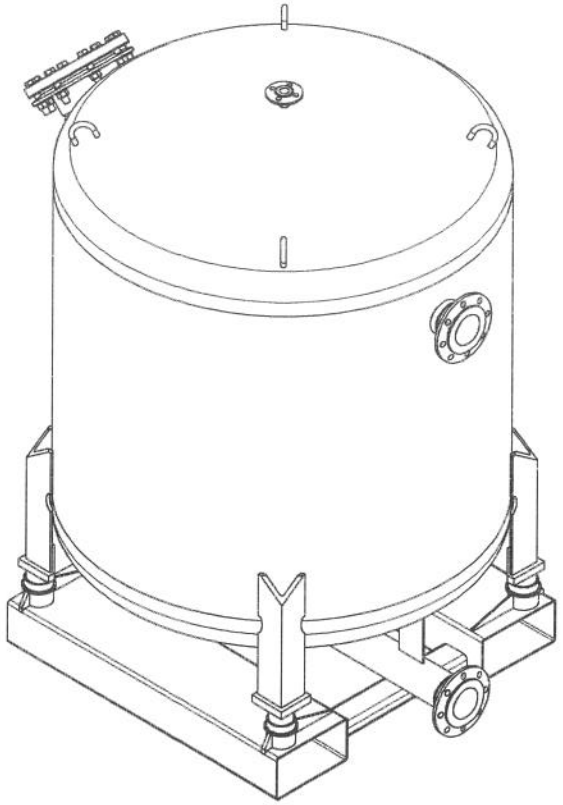

**54" I.D. PRESSURE VESSEL, ISOMETRIC VIEW**
**FOR REFERENCE ONLY**

| | | | |
|---|---|---|---|
| TOLERANCES: | | 20161601 | NAVAL FACILITIES ENGINEERING SERVICE CENTER |
| .X DECIMALS | ±.05 | | 3K TWPS |
| .XX DECIMALS | ±.01 | | MEDIA FILTER |
| .XXX DECIMALS | ±.005 | | |
| FRACTIONS | ±1/8 | | F 90191 |
| ANGLES | ±1° | | |
| NEXT ASSY. | | | |

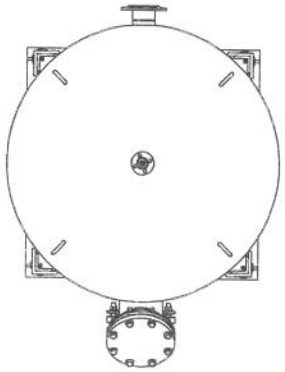

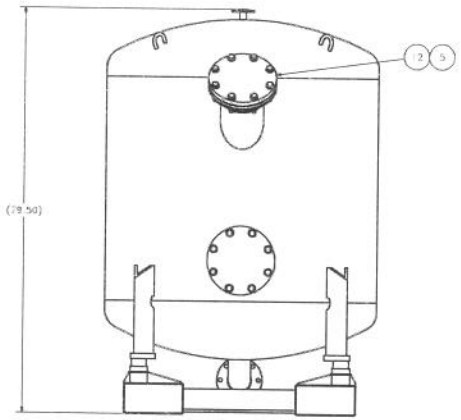


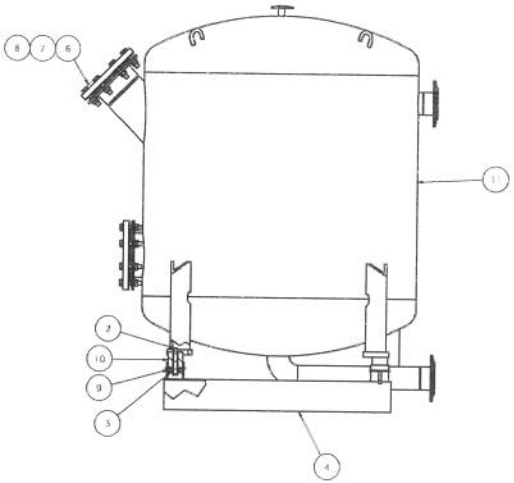


① MEDIA FILTER

NEW DRAWING

## NOTES

1. SEE GENERAL NOTES ON SHEET 20121601.
2. FOR NON-WETTED THREADED FASTENERS, USE MARINE GRADE ANTI-SEIZE THAT ALSO CONTAINS A CALCIUM SULFONATE THICKENER. A SUGGESTED PRODUCT IS: BOSTIC NABT-8.

| QTY | ITE | PART NUMBER | DESCRIPTION | MANUFACTUR | SPEC | MATERIAL |
|---|---|---|---|---|---|---|
| 2 | 12 | 20-21602-2 | [illegible] | | [illegible] | [illegible] |
| | 11 | 20-21603- | [illegible] | | | |
| 4 | 10 | 20-21603-1 | [illegible] | | [illegible] | [illegible] |
| 4 | 9 | 20-21603-2 | COUPLER INC ASTM B 2000 [illegible] | | ASTM B2000 | [illegible] |
| 8 | 8 | [illegible] | [illegible] | | [illegible] | [illegible] |
| 20 | 7 | [illegible] | [illegible] | | [illegible] | [illegible] |
| 8 | 6 | [illegible] | [illegible] | | [illegible] | [illegible] |
| 2 | 5 | 20-21602-3 | [illegible] | | [illegible] | [illegible] |
| | 4 | 20-21603- | [illegible] | | | |
| 4 | 3 | 20-21603-6 | [illegible] WASHER | | [illegible] | [illegible] |
| 4 | 2 | 20-21602-2 | [illegible] | | [illegible] | [illegible] |
| | | 20-21602- | [illegible] | | | |

PARTS LIST

| | | | |
|---|---|---|---|
| | | TOLERANCES | |
| | | .X DECIMALS | ±.03 |
| | | .XX DECIMALS | ±.01 |
| | | .XXX DECIMALS | ±.005 |
| | | FRACTIONS | ±1/8 |
| | | ANGLES | ±1° |
| | NEXT ASSY | | |

DRAWING NO. 20161602

NAVAL FACILITIES ENGINEERING SERVICE CENTER

3A TWPS

MEDIA FILTER

FINAL ASSEMBLY

F 90091

IN DC 31, 45/ - DO 10 SCALE

2011-38

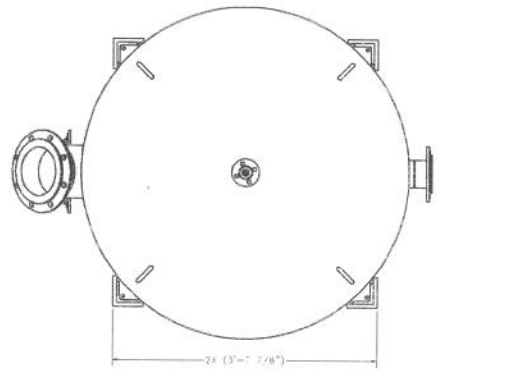


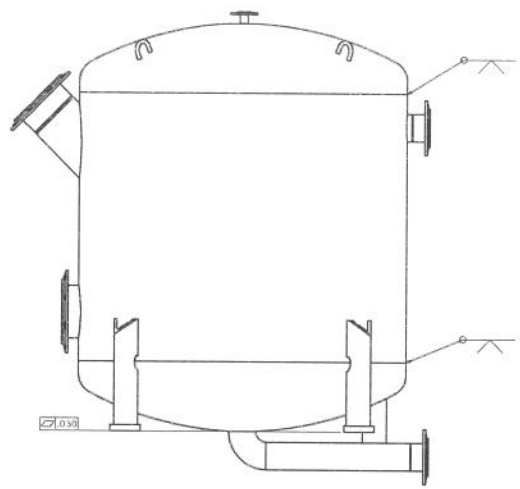


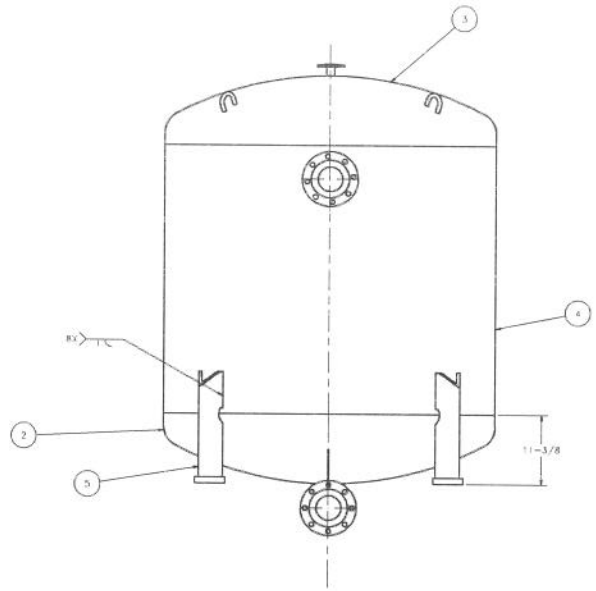


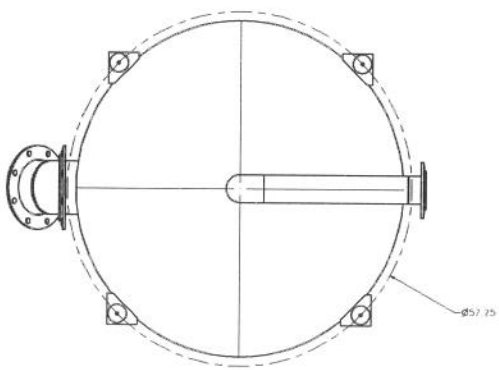


1 MEDIA CHAMBER WELDMENT

NEW DRAWING

NOTES

1. SEE GENERAL NOTES ON SHEET 20121601.

| QTY | ITE | PART NUMBER | DESCRIPTION | MANUFACTUR | SPEC | MATERIAL |
|---|---|---|---|---|---|---|
| 4 | 5 | 20121601-1 | LEG WELDMENT | | | |
| 1 | 4 | [illegible] | [illegible] | | | |
| 1 | 3 | 20121602-1 | [illegible] | | | |
| 1 | 2 | 20121605-1 | [illegible] | | | |
| | | 20121603-1 | MEDIA CHAMBER WELDMENT | | | |

PARTS LIST

| | |
|---|---|
| -1 | 20121602-1 |
| NEXT ASSY. | |

TOLERANCES:

| | |
|---|---|
| .X DECIMALS | ±.03 |
| .XX DECIMALS | ±.01 |
| .XXX DECIMALS | ±.005 |
| FRACTIONS | ±1/8 |
| ANGLES | ±1° |

20161603

NAVAL FACILITIES ENGINEERING SERVICE CENTER

3K TWPS

MEDIA FILTER

MEDIA CHAMBER WELDMENT

F 80091

IF IN DOUBT, ASK — DO NOT SCALE

J2011-59

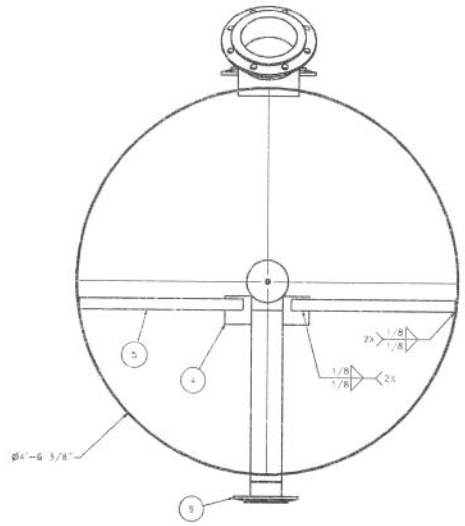


NOTES:

1. SEE GENERAL NOTES ON SHEET 20121601.

(2) LOCATION OF SHELL SEAM IS OPTIONAL. LOCATE ALL FITTINGS AND SHELL PENETRATIONS A MINIMUM OF 4" AWAY FROM SHELL SEAM WELD.

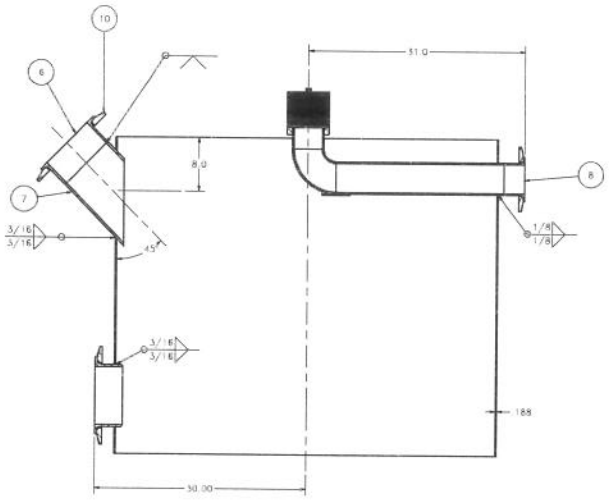


SECTION AK-AK
SCALE 0.14 : 1

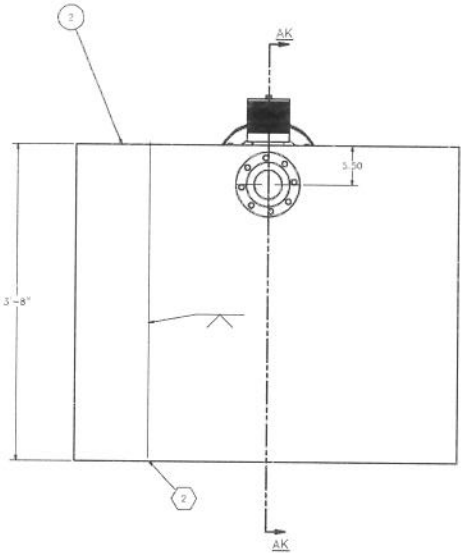


1 SHELL WELDMENT

| QTY | ITE | PART NUMBER | DESCRIPTION | MANUFACTUR | SPEC | MATERIAL |
|---|---|---|---|---|---|---|
| 2 | [illegible] | 20-21601-10 | [illegible] | | [illegible] | [illegible] |
| 1 | 5 | 20-21601-9 | [illegible] | | [illegible] | [illegible] |
| 1 | 4 | 20-21601-8 | [illegible] | | [illegible] | [illegible] |
| 1 | | 20-21601-7 | [illegible] | | [illegible] | [illegible] |
| 2 | 6 | 20-21601-6 | [illegible] | | [illegible] | [illegible] |
| 2 | 7 | 20-21601-5 | [illegible] | | [illegible] | [illegible] |
| 1 | [illegible] | 20-21601-4 | [illegible] | | [illegible] | [illegible] |
| 1 | 3 | 20-21601-3 | [illegible] | [illegible] | | |
| 1 | 2 | [illegible] | [illegible] | | [illegible] | [illegible] |
| | | 20-21601-1 | [illegible] | | | |

PARTS LIST

| | | | |
|---|---|---|---|
| TOLERANCES: | | 20161604 | NAVAL FACILITIES ENGINEERING SERVICE CENTER |
| .X DECIMALS | ±.03 | | SK TWPS |
| .XX DECIMALS | ±.01 | | MEDIA FILTER |
| .XXX DECIMALS | ±.005 | | SHELL WELDMENT |
| FRACTIONS | ±1/8 | | F 80097 |
| ANGLES | ±1° | | |

-1 20121603-1
NEXT ASSY

J2011-39

NEW DRAWING

NOTES

1. SEE GENERAL NOTES ON SHEET 20121601.

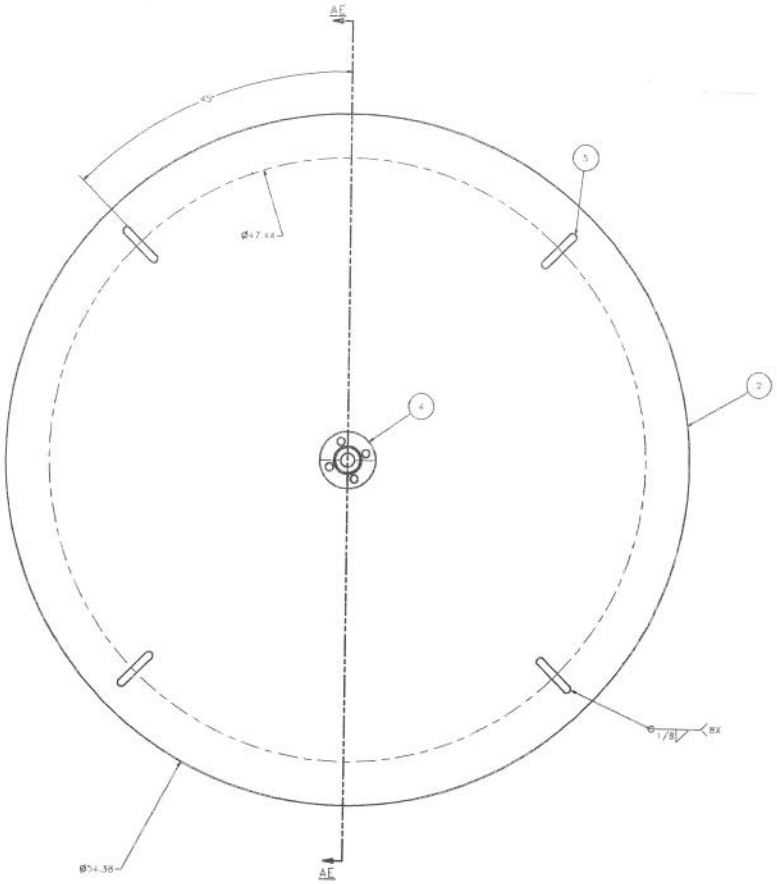


① HEAD, TOP, WELDMENT

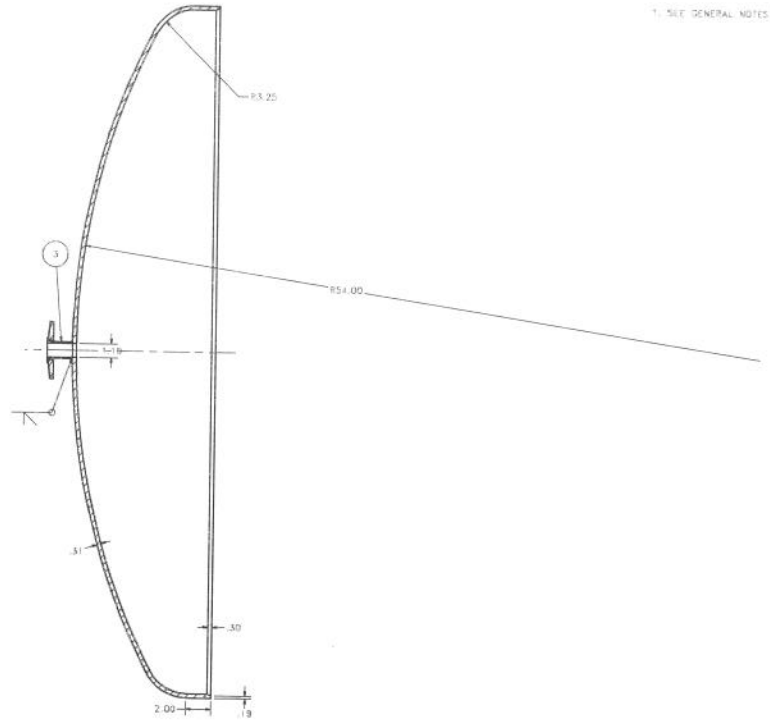


SECTION AE–AE
SCALE 1 / 4

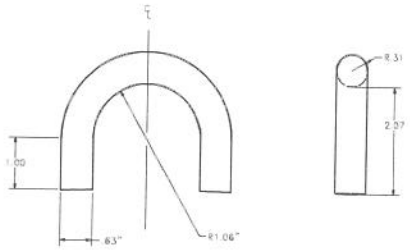


⑤ TIE-DOWN PLIG

| QTY | ITE | PART NUMBER | DESCRIPTION | MANUFACTUR | SPEC | MATERIAL |
|---|---|---|---|---|---|---|
| 1 | 5 | 20 [illegible] | [illegible] | | | [illegible] |
| 1 | [illegible] | 20 [illegible] | [illegible] | | [illegible] | [illegible] |
| 1 | 3 | 20 [illegible] | [illegible] | | [illegible] | [illegible] |
| 1 | [illegible] | 20 [illegible] | [illegible] | | | [illegible] |
| | | 20 [illegible] | [illegible] | | | [illegible] |

PARTS LIST

| | | |
|---|---|---|
| -1 | 20121603-1 | NEXT ASSY. |

TOLERANCES:
X DECIMALS ±.03
XX DECIMALS ±.01
XXX DECIMALS ±.005
FRACTIONS ±1/8
ANGLES ±1°

20161605

NAVAL FACILITIES ENGINEERING SERVICE CENTER

3R TWPS
MEDIA FILTER
HEAD, TOP, WELDMENT

F 80091

J2011-59

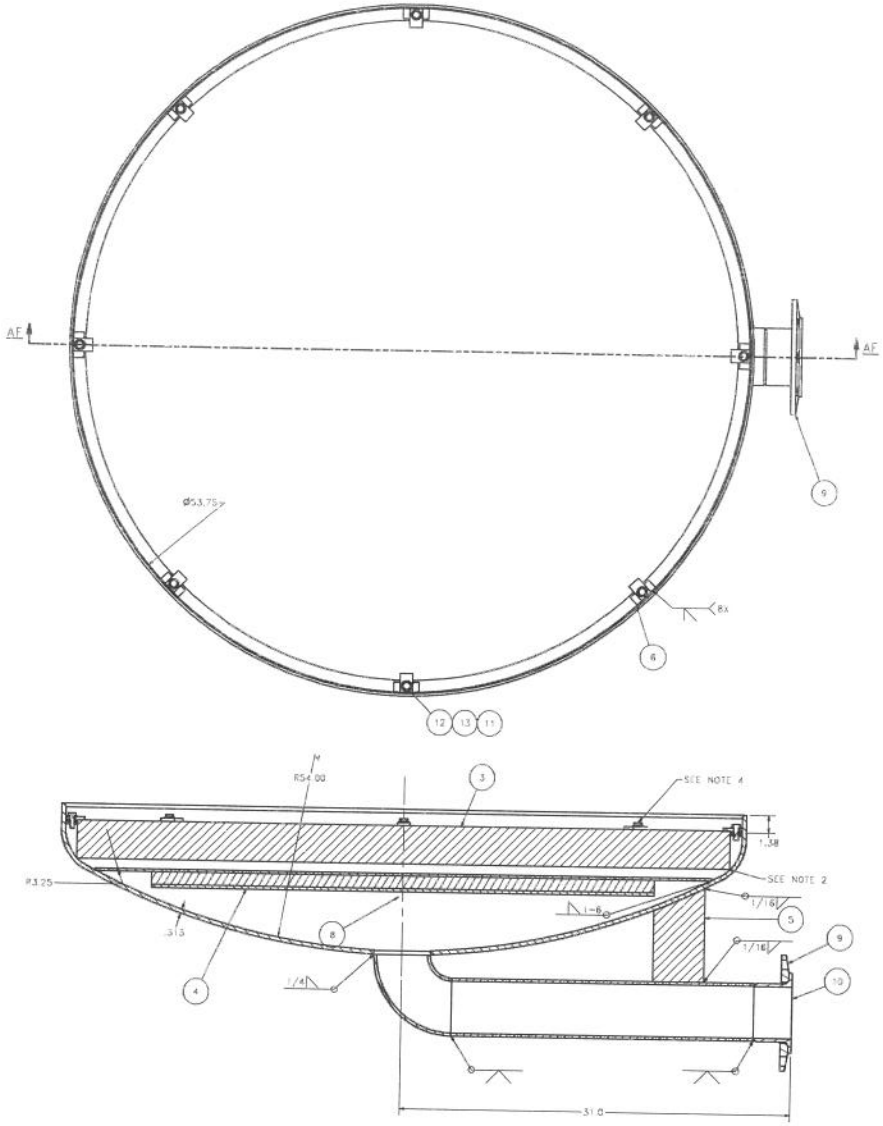


SECTION AF–AF
SCALE 1 / 4

① HEAD, BOTTOM, WELDMENT

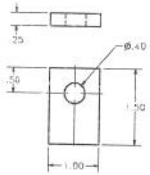


⑪GRID RETAINER

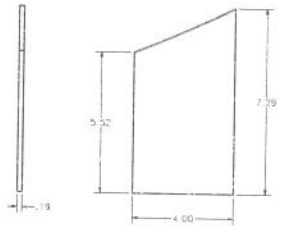


⑦ PLATE

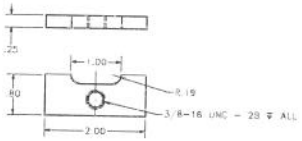


⑥PLATE

## NOTES

NEW DRAWING

1. SEE GENERAL NOTES ON SHEET 20161601.
2. CHECK GAP BETWEEN GRID SUPPORT AND THE HEAD WALL. GAP SHALL BE LESS THAN .039 IN (1MM).
3. A THOROUGH INSPECTION OF THE MEDIA SUPPORT GRID SHOULD BE PERFORMED BEFORE AND AFTER FABRICATION OF THE FILTER PRESSURE VESSEL. THE MEDIA SUPPORT GRID CONTAINS PRECISELY SLOTTED OPENINGS THAT ARE USED TO RETAIN 0.30 TO 0.40 MM SAND (0.012 TO 0.016 IN). FABRICATION PROCESSES AND WELDING PROCEDURES SHALL NOT AFFECT THE SLOT OPENINGS. BYPASS OF THE MEDIA DOWNSTREAM IS EXTREMELY DETRIMENTAL TO PUMPS, VALVES AND OTHER PROCESS COMPONENTS.
4. TORQUE BOLTS TO 21.5 FT-LB. WITH LOCTITE 268 RED.

| QTY | ITE | PART NUMBER | DESCRIPTION | MANUFACTUR | SPEC | MATERIAL |
|---|---|---|---|---|---|---|
| 8 | 3 | 20161606-13 | [illegible] | | | [illegible] |
| 8 | 12 | 20161606-12 | [illegible] | | [illegible] | [illegible] |
| 8 | 11 | 20161606-1 | GRID RETAINER | | | [illegible] |
| 1 | 10 | 20161604-8 | [illegible] | | [illegible] | [illegible] |
| 1 | 9 | 20161601-3 | [illegible] | | [illegible] | [illegible] |
| 1 | 8 | 20161606-3 | [illegible] | | [illegible] | [illegible] |
| 1 | 7 | 20161604-8 | [illegible] | | [illegible] | [illegible] |
| 8 | 6 | 20161606-6 | [illegible] | | [illegible] | [illegible] |
| 1 | 5 | 20161601-7 | [illegible] | | [illegible] | [illegible] |
| 1 | 4 | 20161606-2 | [illegible] | | [illegible] | |
| 1 | 3 | 20161606-1 | [illegible] | | | [illegible] |
| 1 | 2 | 20161606-2 | [illegible] | | | [illegible] |
| | | 20161606-1 | [illegible] | | | |

PARTS LIST

| | | | |
|---|---|---|---|
| -1 | 20121603-1 | TOLERANCES: | |
| | | .X DECIMALS | ±.03 |
| | | .XX DECIMALS | ±.01 |
| | | .XXX DECIMALS | ±.005 |
| | | FRACTIONS | ±1/8 |
| | NEXT ASSY. | ANGLES | ±1° |

20161606

NAVAL FACILITIES ENGINEERING SERVICE CENTER

3K TWPS

MEDIA FILTER

HEAD, BOTTOM, WELDMENT

F 80091

J2011-39

NEW DRAWING

## NOTES

1. SEE GENERAL NOTES ON SHEET 20121601.
2. FOR THREADED CONNECTIONS, USE NSF 61 CERTIFIED NON-SETTING PIPE SEALING COMPOUND. A SUGGESTED PRODUCT IS RECTORSEAL T PLUS 2.

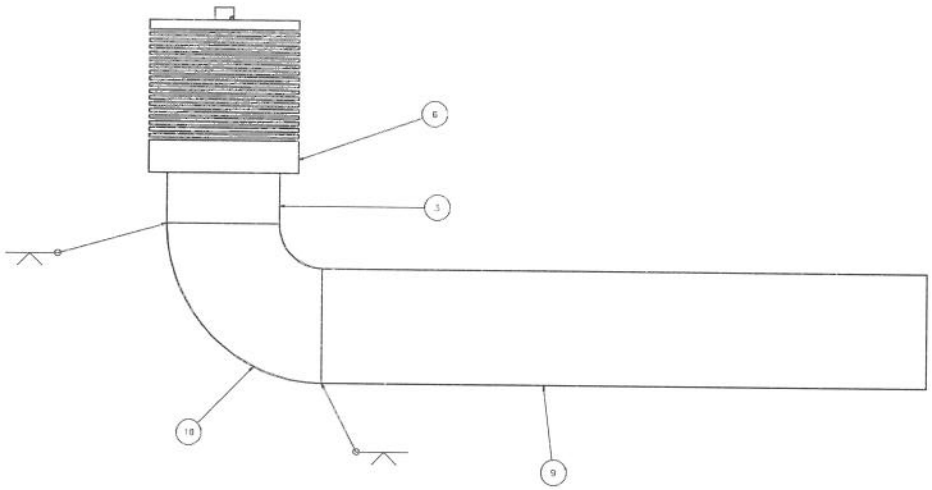


① INLET PIPE WELDMENT

| QTY | ITE | PART NUMBER | DESCRIPTION | MANUFACTUR | SPEC | MATERIAL |
|---|---|---|---|---|---|---|
| 1 | [illegible] | 20121606-4 | [illegible] | | [illegible] | [illegible] |
| 1 | 5 | 20121606-4 | [illegible] | | [illegible] | [illegible] |
| 1 | 6 | 20121110 | [illegible] | | | |
| 1 | 7 | 20121607-3 | [illegible] | | [illegible] | [illegible] |
| | | 20121607-1 | INLET PIPE WELDMENT | | | |

PARTS LIST

| | |
|---|---|
| -1 | 20121604-1 |
| | NEXT ASSY |

TOLERANCES:

| | |
|---|---|
| X DECIMALS | ±.03 |
| XX DECIMALS | ±.01 |
| XXX DECIMALS | ±.005 |
| FRACTIONS | ±1/8 |
| ANGLES | ±1° |

MODEL NO. 20161607

NAVAL FACILITIES ENGINEERING SERVICE CENTER

3K TWPS

MEDIA FILTER

INLET PIPE WELDMENT

F 80091

J2011-39

NEW DRAWING

## NOTES

1. SEE GENERAL NOTES ON SHEET 20121601.
2. MEDIA BED FILTER GRID ASSEMBLY SPECIFICATIONS:
   - ALL MATERIAL DUPLEX STAINLESS STEEL 2507 (UNS S32750).
   - MEDIA BED FILTER GRID DIAMETER: 51-7/8" O.D.
   - SLOT SHAPE: #90VEE-WIRE (WEDGE WIRE)
     SLOT SIZE: 0.005" ± 0.002"
   - PERIMETER BAND: 2" HIGH X 1/4" THICK
   - SINGLE PIECE CONSTRUCTION
   - BEARING SUPPORT STRENGTH SHOULD BE SIZED FOR 12 PSI (GRID SHOULD SUPPORT 12 PSI PRESSURE ON ITS OWN. NO MID BEAM SUPPORT WILL BE PROVIDED)
3. MEDIA BED FILTER GRID ASSEMBLY SUGGESTED VENDORS:

   HENDRICK SCREEN COMPANY
   OWENSBORO, KY
   MR. WILLIAM FLOWERS
   (270) 685-5138
   willie.flowers@hendrickscreenco.com
   www.hendrickscreenco.com

   FEDERAL SCREEN PRODUCTS INC.
   MR. GREG COLEMAN
   (905) 677-4171
   greg@federalscreen.com
   www.federalscreen.com

   CONCORD SCREEN INC.
   MS. LORRAINE WALL
   (905) 953-8100
   lwall@concordscreen.com
   www.concordscreen.com

   JOHNSON SCREENS(R)
   NEW BRIGHTON, MN
   MS. MEGAN RANGER
   (651) 638-3192
   megan.ranger@bilfinger.com
   www.johnsonscreens.com
4. A THORUGH INSPECTION OF THE MEDIA SUPPORT GRID SHOULD BE PERFORMED BEFORE AND AFTER FABRICATION OF THE FILTER PRESSURE VESSEL. THE MEDIA SUPPORT GRID CONTAINS PRECISELY SLOTTED OPENINGS THAT ARE USED TO RETAIN 0.30 TO 0.40 MM SAND (0.012 TO 0.016 IN). FABRICATION PROCESSES AND WELDING PROCEDURES SHALL NOT AFFECT THE SLOT OPENINGS. BYPASS OF THE MEDIA DOWNSTREAM IS EXTREMELY DETRIMENTAL TO PUMPS, VALVES AND OTHER PROCESS COMPONENTS.

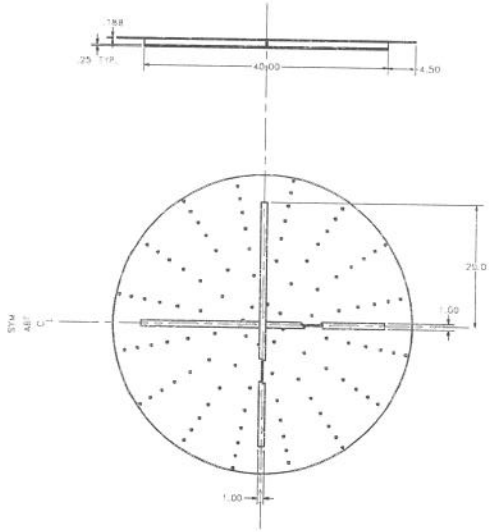


② DIFFUSER ASSEMBLY

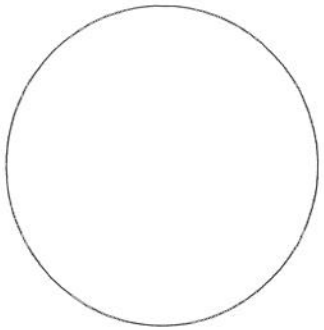

⑥ MEDIA BED FILTER GRID ASSEMBLY

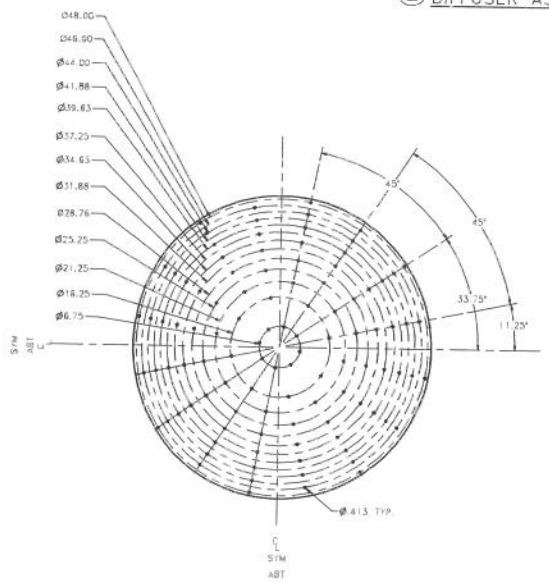


② DIFFUSER PLATE

| QTY | ITE | PART NUMBER | DESCRIPTION | MANUFACTUR | SPEC | MATERIAL |
|---|---|---|---|---|---|---|
| 1 | 2 | 20121608-2 | DIFFUSER PLATE [illegible] | | [illegible] | |
| 1 | | 20121608-1 | MEDIA BED FILTER GRID, 1/4 [illegible] SLOT, SLOT SIZE 0.005" [illegible] - 0.002", [illegible] | | | [illegible] |

PARTS LIST

| | | |
|---|---|---|
| -2 | 20121606-1 | |
| -1 | 20121606-1 | |
| | NEXT ASSY | |

TOLERANCES:
.X DECIMALS ±.03
.XX DECIMALS ±.01
.XXX DECIMALS ±.005
FRACTIONS ±1/8
ANGLES ±1°

20161608

NAVAL FACILITIES ENGINEERING SERVICE CENTER

3K TWPS
MEDIA FILTER
DIFFUSER & MEDIA BED

F 80091

J2011-39

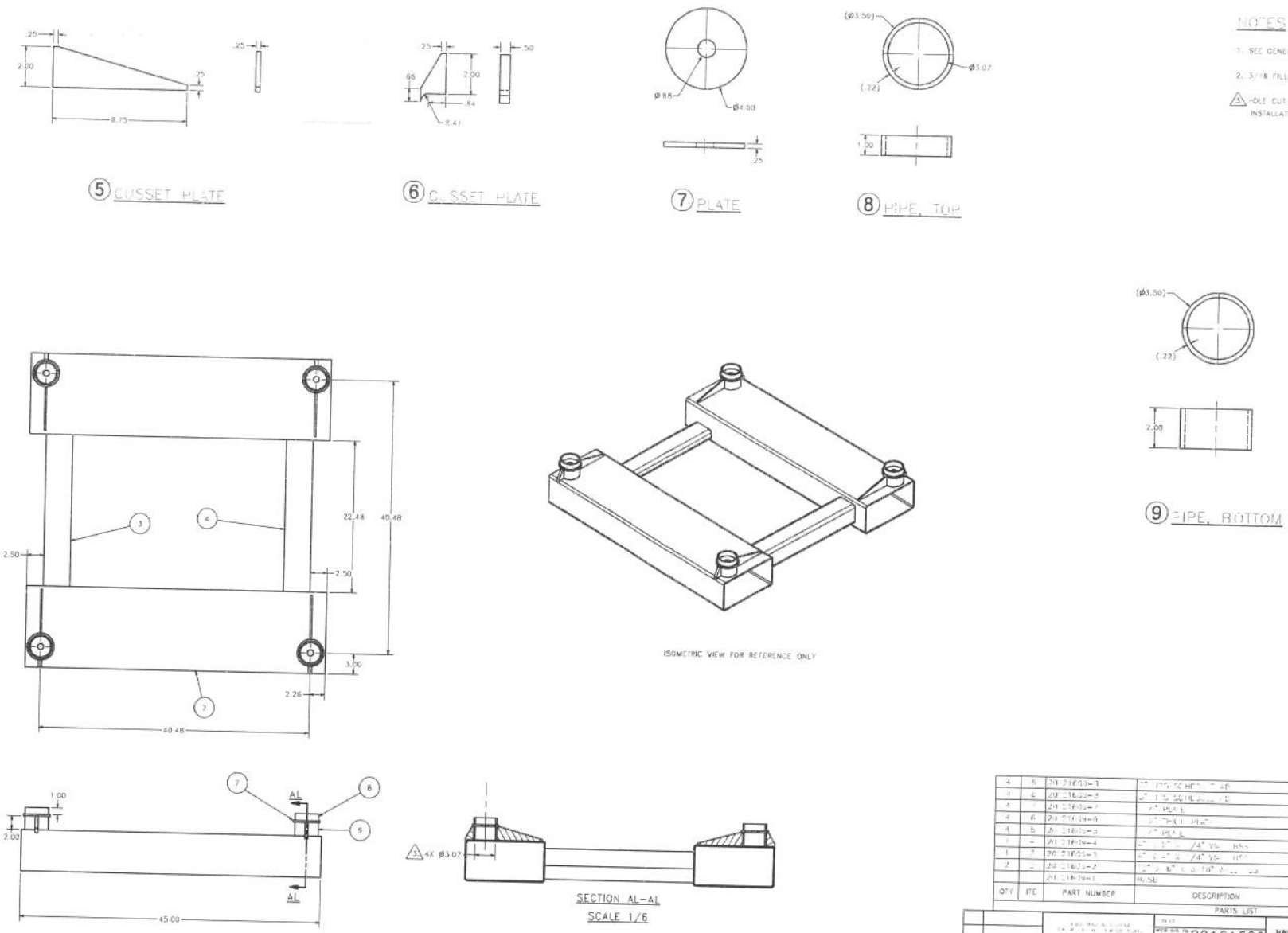


NOTES

1. SEE GENERAL NOTES ON SHEET 20121601.
2. 3/16 FILLET WELD ALL PIECES.
3. HOLE CUT IN RECTANGULAR TUBING TO ALLOW INSTALLATION OF SHOCK MOUNT.

| QTY | ITE | PART NUMBER | DESCRIPTION | MANUFACTUR | SPEC | MATERIAL |
|---|---|---|---|---|---|---|
| 4 | 5 | 20121609-9 | [illegible] | | [illegible] | [illegible] |
| 4 | 6 | 20121609-8 | [illegible] | | [illegible] | [illegible] |
| 4 | 7 | 20121609-7 | [illegible] | | [illegible] | [illegible] |
| 4 | 6 | 20121609-6 | [illegible] | | [illegible] | [illegible] |
| 4 | 5 | 20121609-5 | [illegible] | | [illegible] | [illegible] |
| 1 | 4 | 20121609-4 | [illegible] | | [illegible] | [illegible] |
| 1 | 3 | 20121609-3 | [illegible] | | [illegible] | [illegible] |
| 2 | 2 | 20121609-2 | [illegible] | | [illegible] | [illegible] |
| | | 20121609-1 | HOSE | | | |

PARTS LIST

| | | | |
|---|---|---|---|
| -1 | 20121602-1 | NEXT ASSY. | |

TOLERANCES:
X DECIMALS ±.03
XX DECIMALS ±.01
XXX DECIMALS ±.005
FRACTIONS ±1/8
ANGLES ±1°

20161609

NAVAL FACILITIES ENGINEERING SERVICE CENTER

3K TWPS

MEDIA FILTER

BASE

F 80091

22011-39

NOTES

1. SEE GENERAL NOTES ON SHEET 20121601.

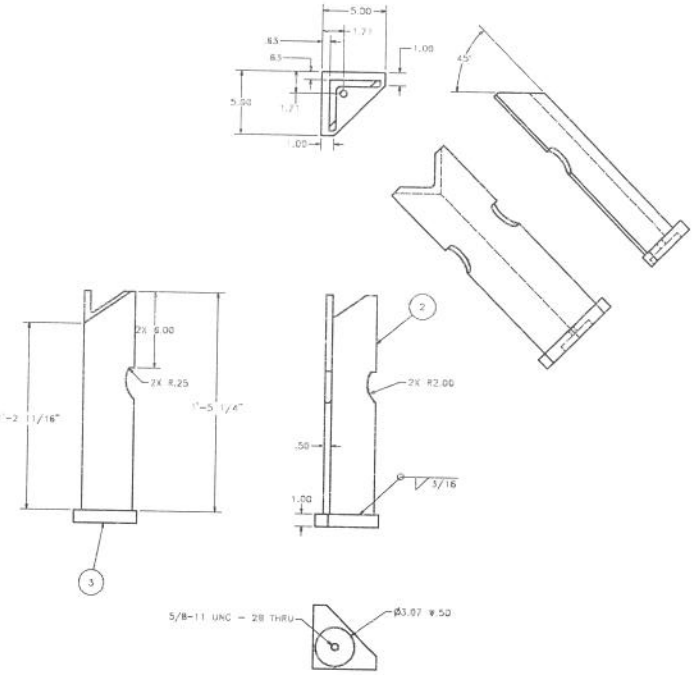


① LEC ASSEMBLY

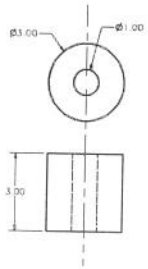


④ SHOCK MOUNT

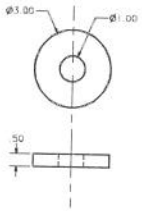


⑤ SHOCK MOUNT

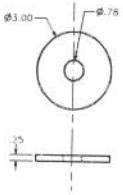


⑥ WASHER

| QTY | ITE | PART NUMBER | DESCRIPTION | MANUFACTUR | SPEC | MATERIAL |
|---|---|---|---|---|---|---|
| | 4 | 20121610-6 | [illegible] | | [illegible] | [illegible] |
| | 3 | 20121610-5 | [illegible] | | [illegible] | [illegible] |
| | 2 | 20121610-4 | [illegible] | | [illegible] | [illegible] |
| 1 | 1 | 20121610-3 | [illegible] PLATE | | [illegible] | [illegible] |
| 1 | 1 | 20121610-2 | [illegible] | | [illegible] | [illegible] |
| | | 20121610-1 | [illegible] | | [illegible] | [illegible] |

PARTS LIST

| | | |
|---|---|---|
| -6 | 20121602-1 | |
| -5 | 20121602-1 | |
| -4 | 20121602-1 | |
| -1 | 20121603-1 | |
| | NEXT ASSY | |

TOLERANCES:
.X DECIMALS ±.03
.XX DECIMALS ±.01
.XXX DECIMALS ±.005
FRACTIONS ±1/8
ANGLES ±1°

20161610

NAVAL FACILITIES ENGINEERING SERVICE CENTER

3K TWPS

MEDIA FILTER

LEC ASSEMBLY

F 90091

20111-39

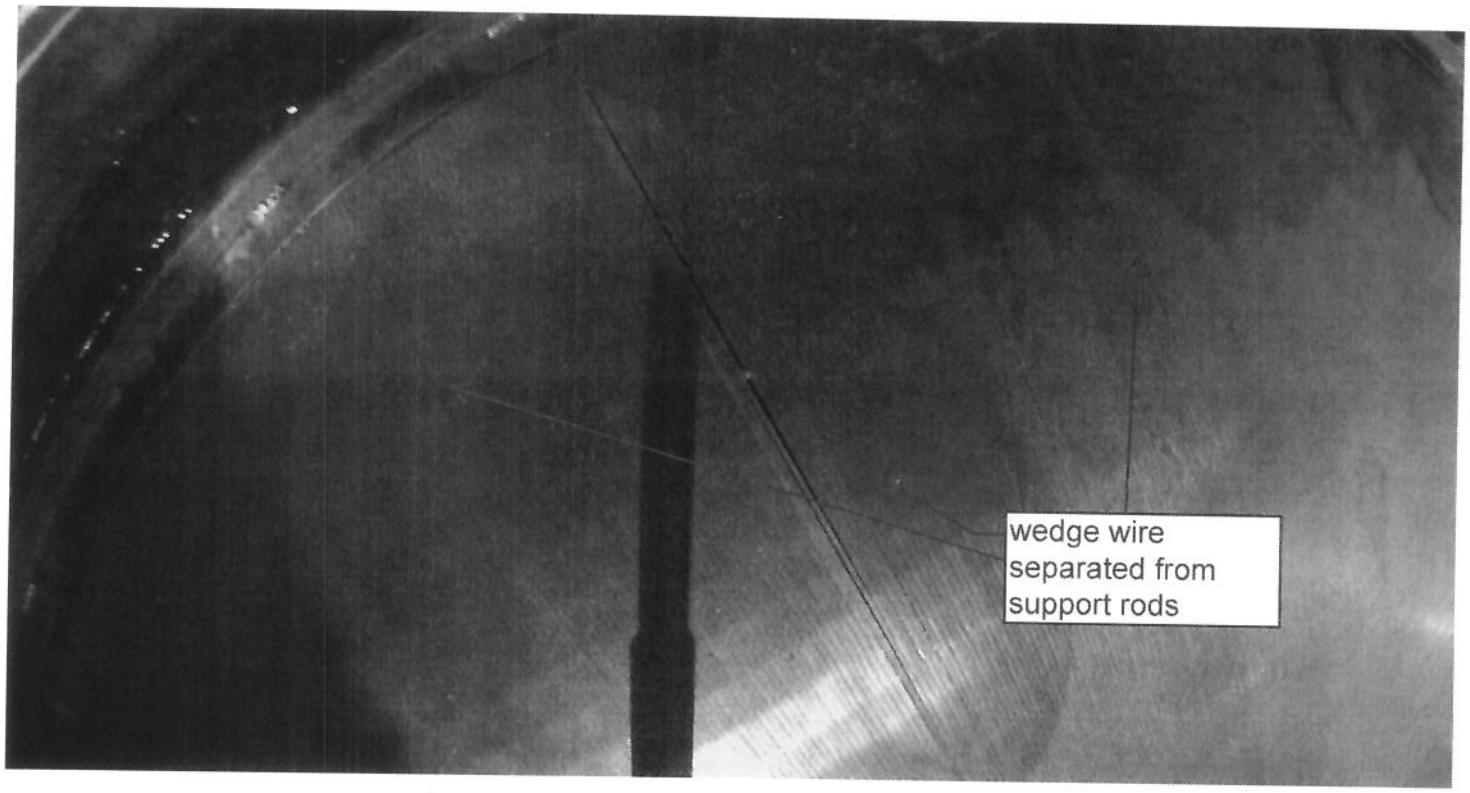


GRID FAILURE
PICTURE

| Std. Wound Screen | |
|---|---|
| Screen dia. | 18.0" |
| Slot size | 0.005" (±.002) |
| Wrap wire | No. 90 |
| Support wire | No. 90 |

Notes:
Unless otherwise specified
1.- Follow general tolerance spec's
2.- Deburr and break sharp edges 45°
3.- All dimensions in fractional inch system

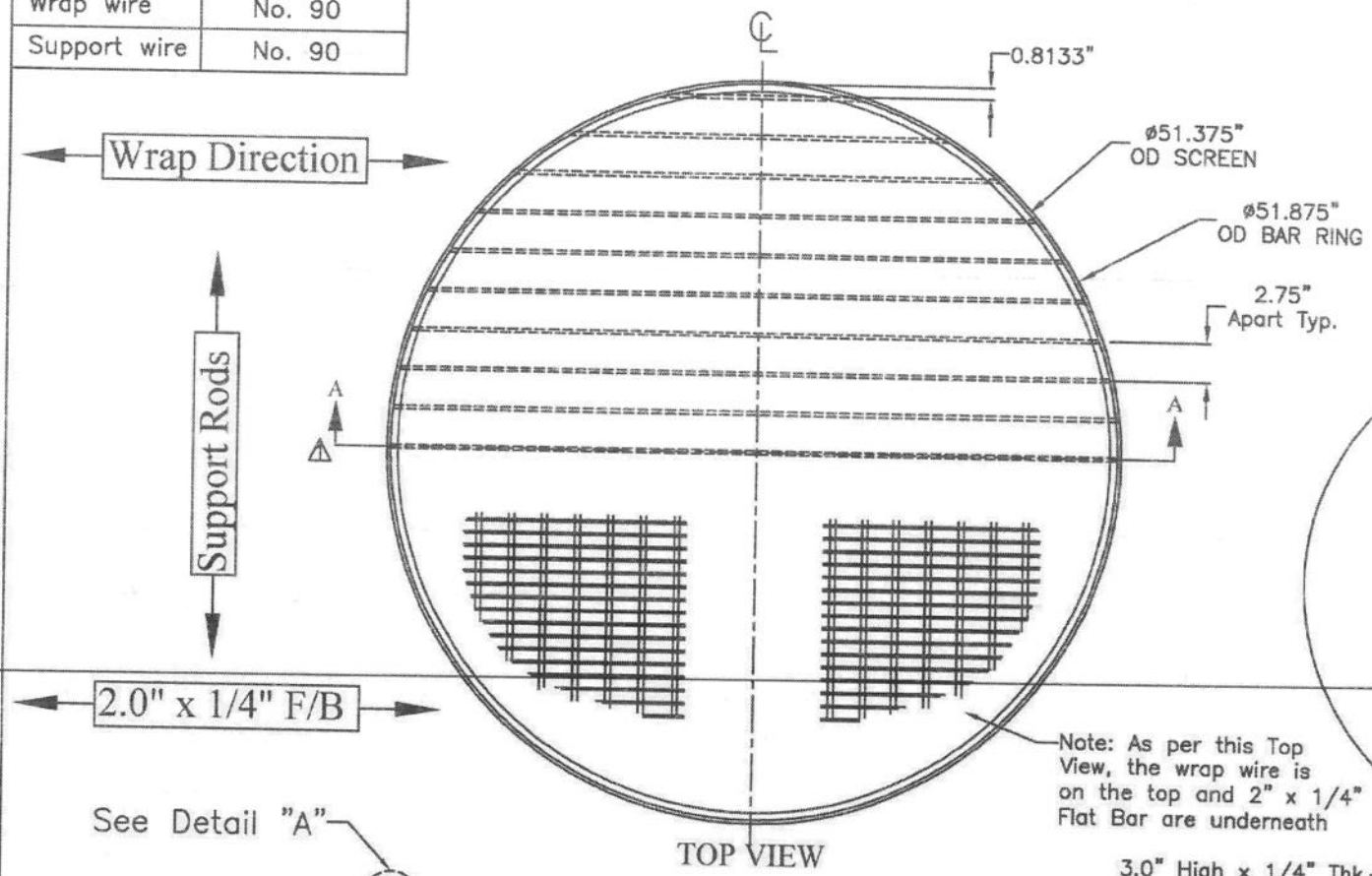


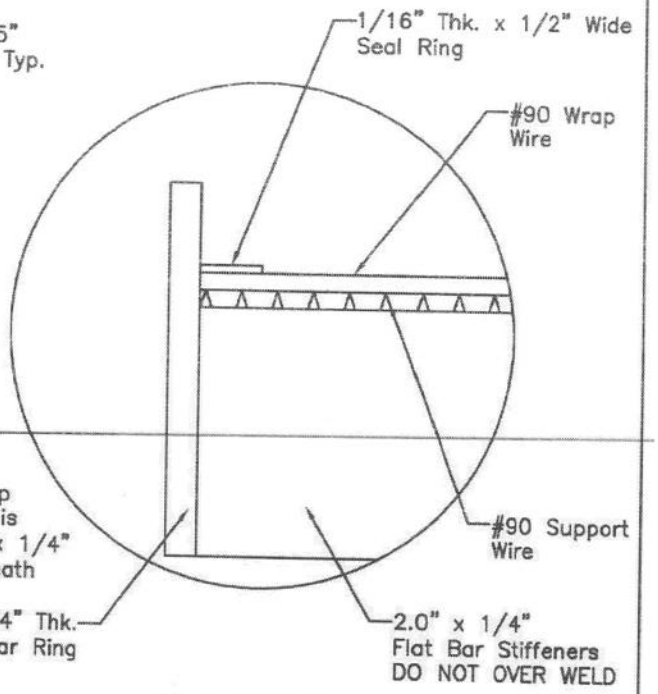


Detail "A"
N.T.S.



| WO# 13821 | MATERIAL Duplex 2205 SS | QUANTITY 1 Assembly |
|---|---|---|

TOLERANCES

DO NOT SCALE

FRACTIONAL-------±1/16"
0.0-------±0.02"
0.00-------±0.01"
0.000-------±0.005"

UNLESS OTHERWISE SPECIFIED

| REVISIONS | DATE |
|---|---|
| Added a Screen OD Page 2E for WaterJet ⚠ | July 27, 12 |
| | |
| | |

This drawing and the ideas it represents are the intellectual property of:

Federal Screen Products Inc.
7524 Bath Road
Mississauga, Ontario
L4T 1L2

Part Number 127699 Drawing 13821-002
Description 51-7/8" OD Grid, C/W Ring & Stiffeners
Drawn by MH Customer Graybar Date July 17, 12

Notes:
Unless otherwise specified
1.- Follow general tolerance spec's
2.- Deburr and break sharp edges 45°
3.- All dimensions in fractional inch system

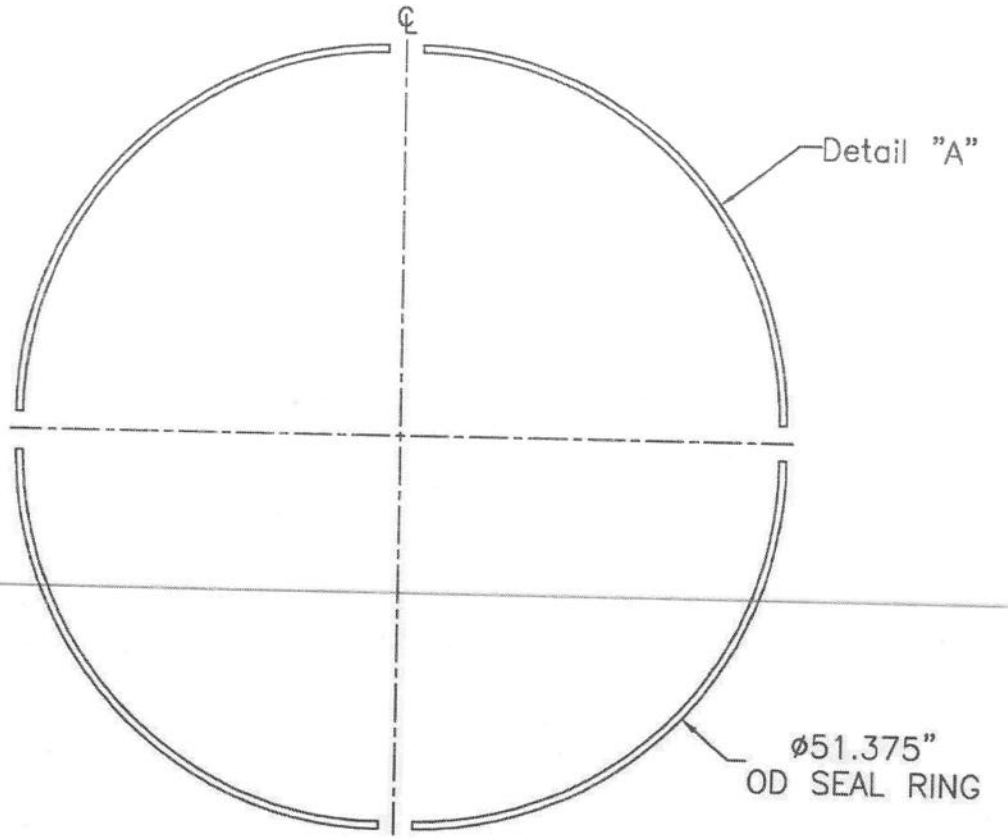


Note: All 4 Pieces are required to make 1 assembly

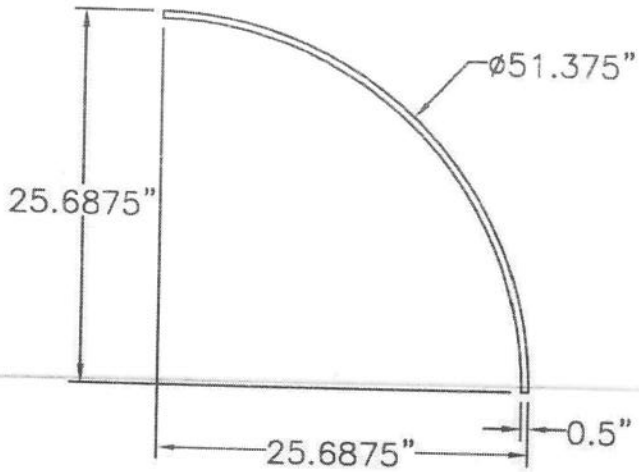


Detail A



| WO# 13821 | MATERIAL Duplex 2205 SS | QUANTITY 1 Assembly |
|---|---|---|

TOLERANCES

DO NOT SCALE

FRACTIONAL-------±1/16"
0.0-------±0.02"
0.00-------±0.01"
0.000-------±0.005"

UNLESS OTHERWISE SPECIFIED

| REVISIONS | DATE |
|---|---|
| | |
| | |
| | |

This drawing and the ideas it represents are the intellectual property of:

Federal Screen Products Inc.

7524 Bath Road
Mississauga, Ontario
L4T 1L2

Part Number 127699 Drawing 13821-002A
Description 51-3/8" OD Seal Ring
Drawn by MH Customer Graybar Date July 17, 12

Notes:
Unless otherwise specified
1.- Follow general tolerance spec's
2.- Deburr and break sharp edges 45°
3.- All dimensions in fractional inch system

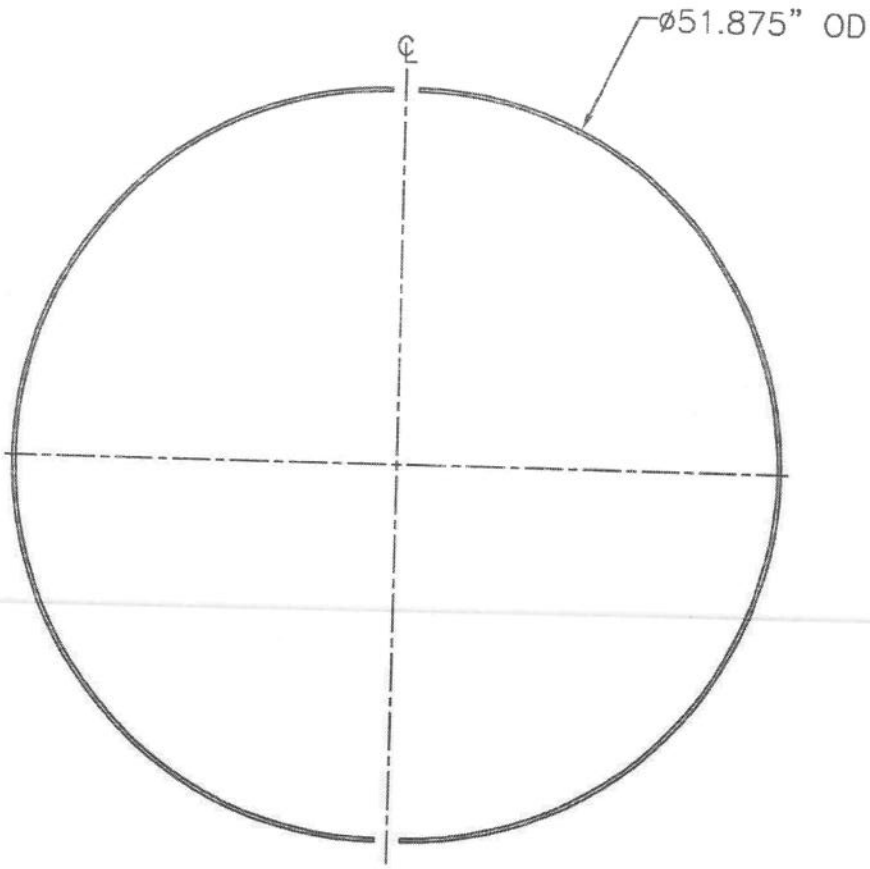


Note: All 2 Pieces are required to make 1 assembly

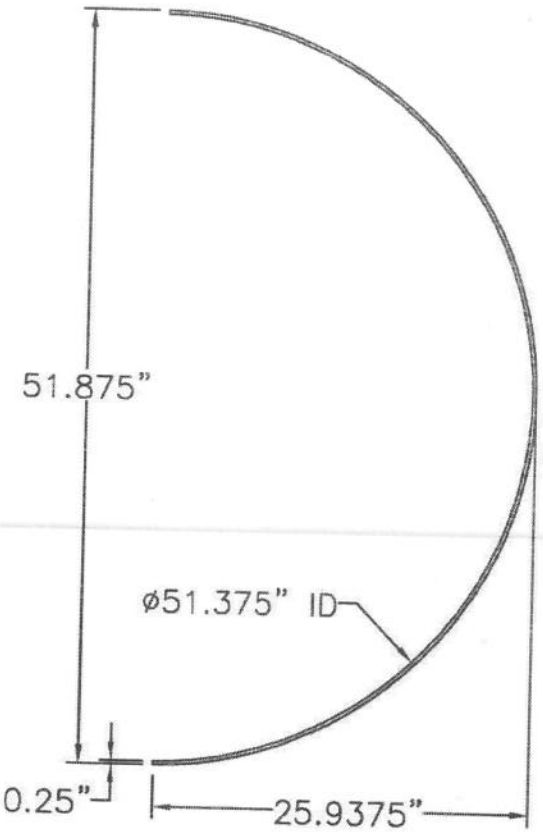




| WO# 13821 | MATERIAL Duplex 2205 SS | QUANTITY 1 Assembly |
|---|---|---|

TOLERANCES

DO NOT SCALE

FRACTIONAL------±1/16"
0.0------±0.02"
0.00------±0.01"
0.000------±0.005"

UNLESS OTHERWISE SPECIFIED

| REVISIONS | DATE |
|---|---|
| | |
| | |
| | |

This drawing and the ideas it represents are the intellectual property of:

Federal Screen Products Inc.

7524 Bath Road
Mississauga, Ontario
L4T 1L2

Part Number 127699 Drawing 13821-002B
Description 51-7/8" OD Bar Ring
Drawn by MH Customer Graybar Date July 17, 12

Notes:
Unless otherwise specified
1.- Follow general tolerance spec's
2.- Deburr and break sharp edges 45°
3.- All dimensions in fractional inch system

Note: All 19 Pieces are required to make 1 assembly

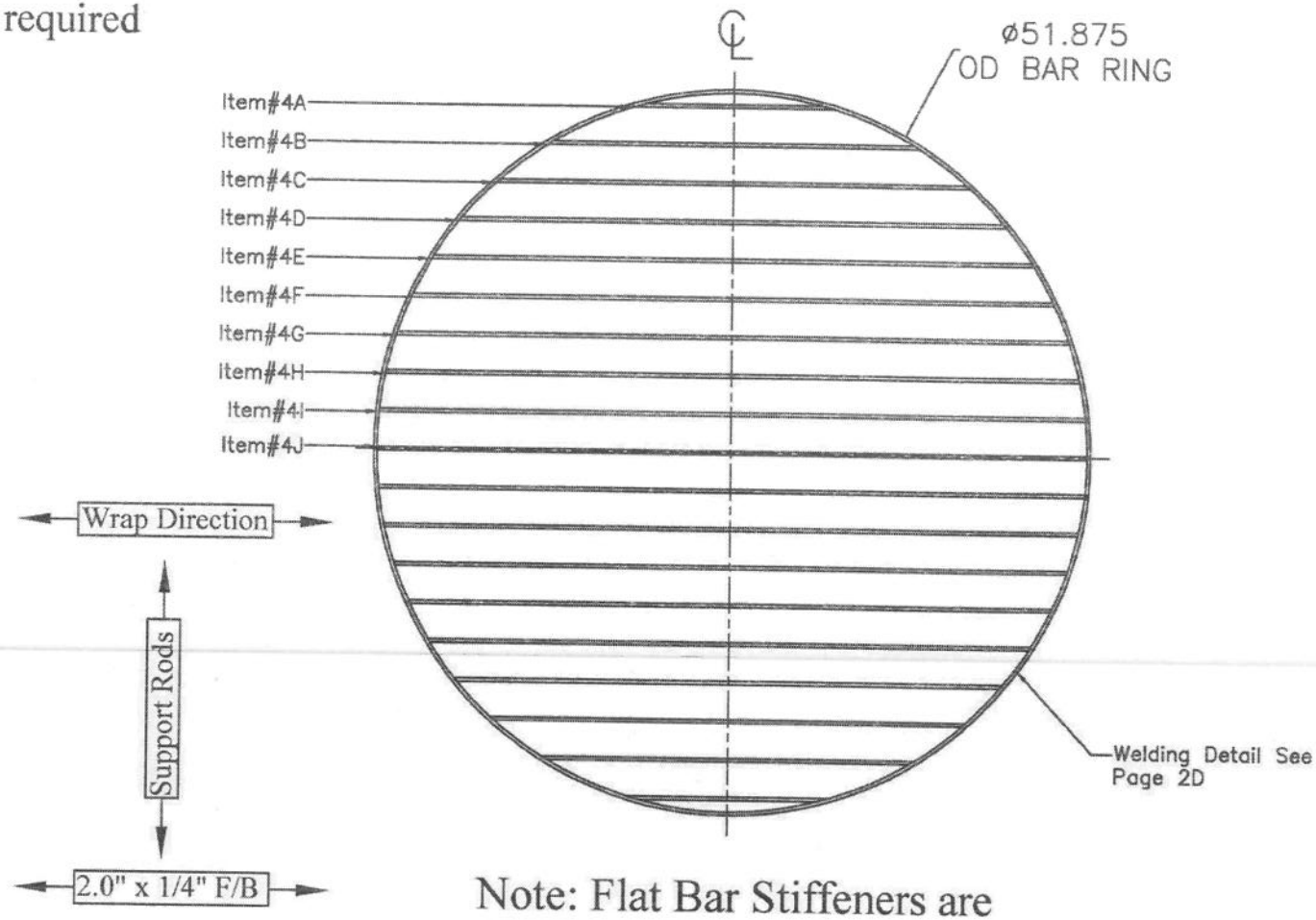


| 2" x 1/4" Flat Bar Stiffeners | | |
|---|---|---|
| Item | Qty. | Length |
| 4A | 2 | 14.6046" |
| 4B | 2 | 26.9231" |
| 4C | 2 | 34.2916" |
| 4D | 2 | 39.5787" |
| 4E | 2 | 43.5492" |
| 4F | 2 | 46.5413" |
| 4G | 2 | 48.7355" |
| 4H | 2 | 50.2366" |
| 4I | 2 | 51.2403" |
| 4J | 1 | 51.3750" |

Note: Flat Bar Stiffeners are Underneath Support Rods



WO# 13821 | MATERIAL Duplex 2205 SS | QUANTITY 1 Assembly

TOLERANCES
DO NOT SCALE
FRACTIONAL-------±1/16"
0.0-------±0.02"
0.00-------±0.01"
0.000-------±0.005"
UNLESS OTHERWISE SPECIFIED

| REVISIONS | DATE |
|---|---|
| | |
| | |
| | |

This drawing and the ideas it represents are the intellectual property of:

Federal Screen Products Inc.
7524 Bath Road
Mississauga, Ontario
L4T 1L2

Part Number 127699 | Drawing 13821-002C
Description Flat Bar Stiffeners
Drawn by MH | Customer Graybar | Date July 17, 12

| Item | Qty. | Description | Material | Inventory |
|---|---|---|---|---|
| 4 | 35 | 2" Wide x 1/4" Flat Bar Stiffeners x Various Lengths | Duplex 2205 SS | WJ |

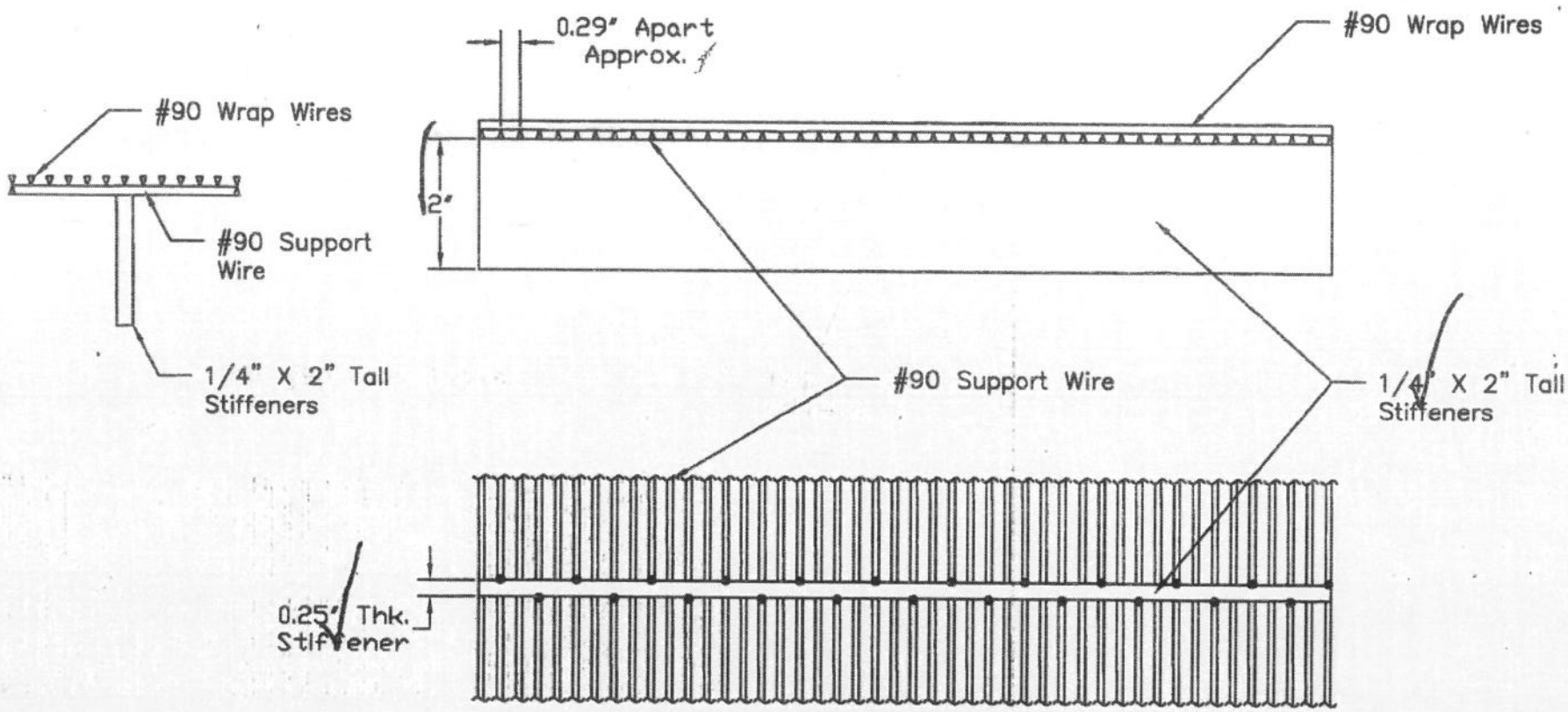


Bottom View

Note: Weld Every 2nd Support Rod To 1/4" x 2" Stiffeners Stagger & Alternate Sides

9/2

Page 2D Of 2

| WO# 13821 | MATERIAL Duplex 2205 SS | QUANTITY 1 Assembly |
|---|---|---|

TOLERANCES

DO NOT SCALE

FRACTIONAL-------±1/16"
0.0-------±0.02"
0.00-------±0.01"
0.000-------±0.005"

UNLESS OTHERWISE SPECIFIED

| REVISIONS | DATE |
|---|---|
| | |
| | |
| | |

This drawing and the ideas it represents are the intellectual property of:

Federal Screen Products Inc.

7524 Bath Road
Mississauga, Ontario
L4T 1L2

Part Number 127699 Drawing 13821-002D

Description Welding Flat Bar Stiffeners Detail

Drawn by MH Customer Graybar Date July 17, 12

| Std. Wound Screen | |
|---|---|
| Screen dia. | 18.0" |
| Slot size | 0.005" (±.002) |
| Wrap wire | No. 90 |
| Support wire | No. 90 |

Notes:
Unless otherwise specified
1.- Follow general tolerance spec's
2.- Deburr and break sharp edges 45°
3.- All dimensions in fractional inch system

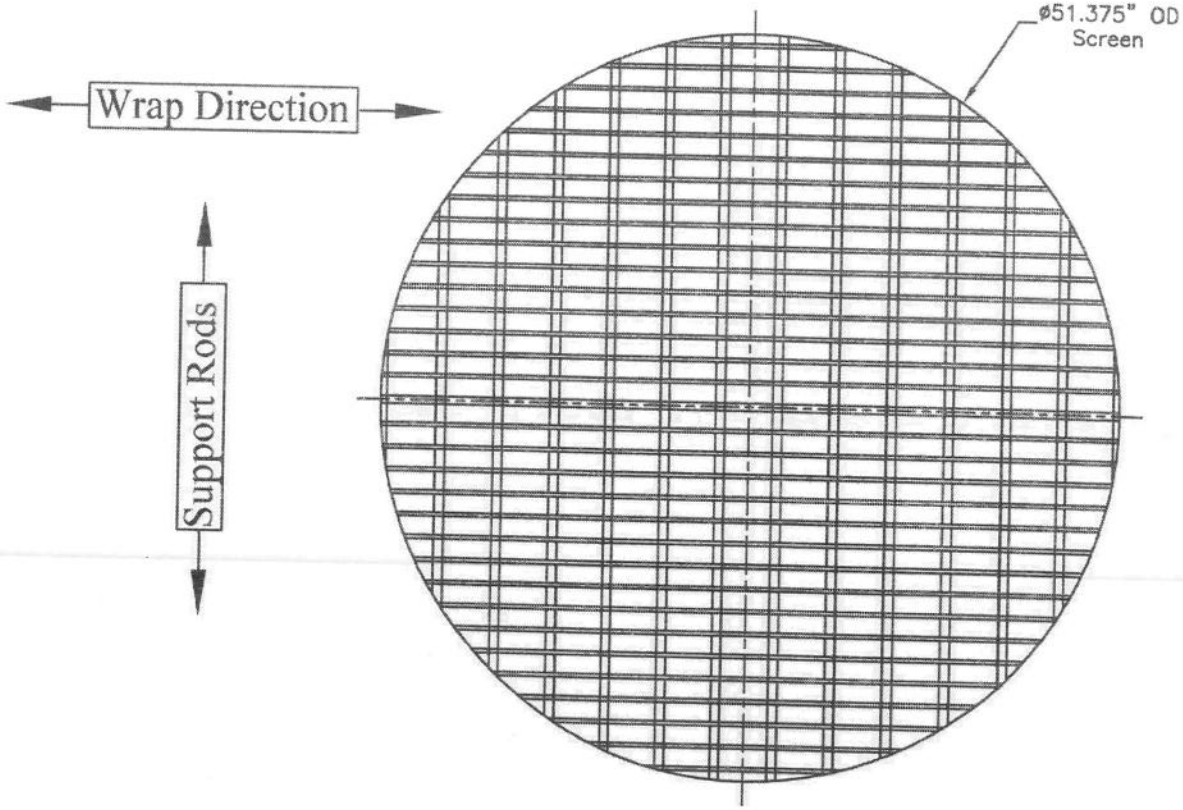


Note: Screen is to be WJ in 1 Piece - 51-3/8" OD



WO# 13821 | MATERIAL Duplex 2205 SS | QUANTITY 1 Assembly

TOLERANCES
DO NOT SCALE
FRACTIONAL-------±1/16"
0.0-------±0.02"
0.00-------±0.01"
0.000-------±0.005"
UNLESS OTHERWISE SPECIFIED

| REVISIONS | DATE |
|---|---|
| | |
| | |
| | |

This drawing and the ideas it represents are the intellectual property of:

Federal Screen Products Inc.

7524 Bath Road
Mississauga, Ontario
L4T 1L2

Part Number 127699 | Drawing 13821-002E
Description 51-3/8" OD SCREEN
Drawn by MH | Customer Graybar | Date July 27, 12

| Materials | qty | unit cost | total |
|---|---|---|---|
| New grid 2507 duplex sst | 1.0 | 10500 | 10500 |
| 1/4" 2507 duplex plate | 5 | 5 | 25 |
| duplex sst 3/8-16 bolts and washers | 8 | 15 | 120 |
| Material Burden | | | 1065 |

| Labor | hrs | $/hr | total |
|---|---|---|---|
| Machinist labor | 12.0 | 68.55 | 823 |
| Welding Labor | 16.0 | 63.81 | 1021 |
| Welding Labor | 8.0 | 63.81 | 510 |
| Welding Labor | 4.0 | 63.81 | 255 |
| Welding Labor | 6.0 | 63.81 | 383 |
| Welding Labor | 8.0 | 63.81 | 510 |
| Welding Labor | 12.0 | 63.81 | 766 |
| Welding Labor | 32.0 | 63.81 | 2042 |
| Laborer | 86.0 | 50.48 | 4341 |
| Supervision/Quality Control | 19.6 | 75.41 | 1478 |

| Other | |
|---|---|
| Cleaning/passivation costs | 1800 |
| Shipping to/from Federal Screen | 600 |
| Shipping to/from Michigan | 3600 |

**TOTAL = 29839**

Comment

from Federal Screen, adjust for corrective action
scaled estimate from Penn stainless $5.00/lb
estimate
added as its hard to source some of the material, 10%

retainers and bolt pads
cut vessel
remove urethane
cut tabs
remove grid
weld new bolt pads
install grid
weld vessel back together
Assist welder, pack and ship items
20% of overall labor

scaled up from 26 inch vessel cleaning and apssivation
300 lbs 5 ft by 5 ft
1870 lbs, 6 ft by 6 ft by 7 ft high