MAJOR STEPS OF JACKING OPERATIONS

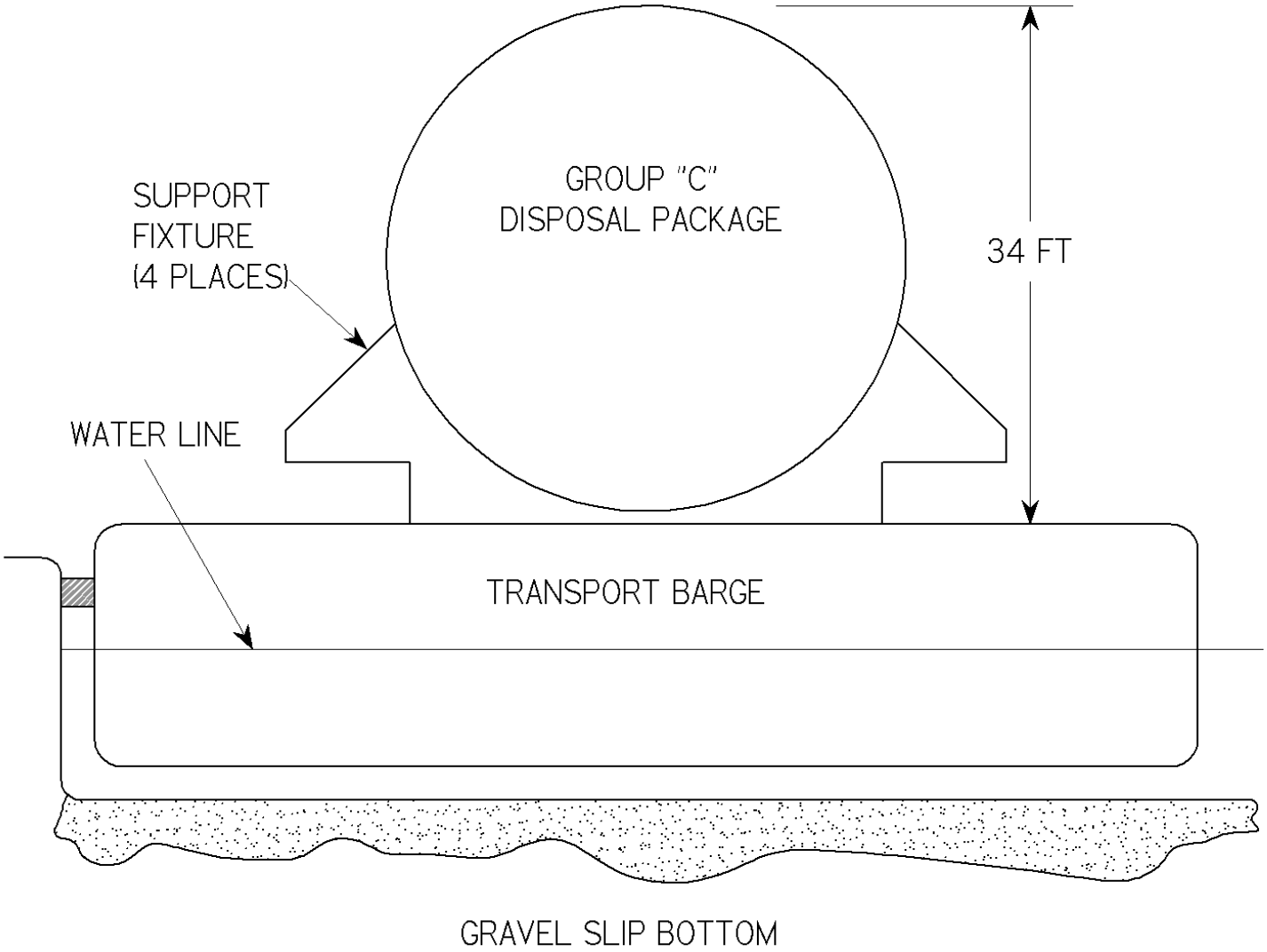

BARGE DOCKED IN THE BARGE SLIP WITH A PACKAGE WELDED TO THE BARGE

(END VIEW)

MAJOR STEPS OF JACKING OPERATIONS

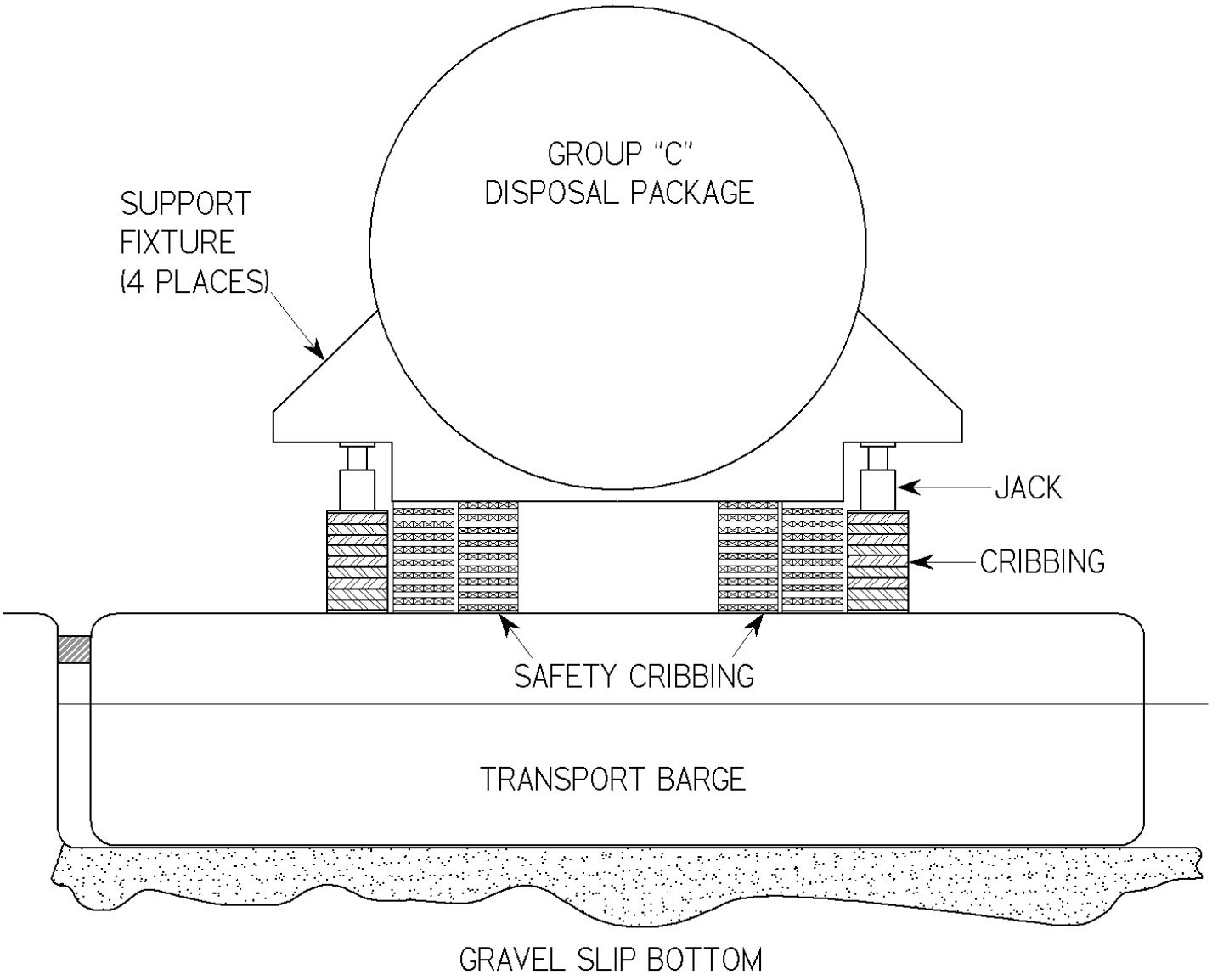

BARGE GROUNDED ON GRAVEL SLIP BOTTOM,
PACKAGE READY FOR TEMPORARY SUPPORT
STAND INSTALLATION
(END VIEW)

MAJOR STEPS OF JACKING OPERATIONS

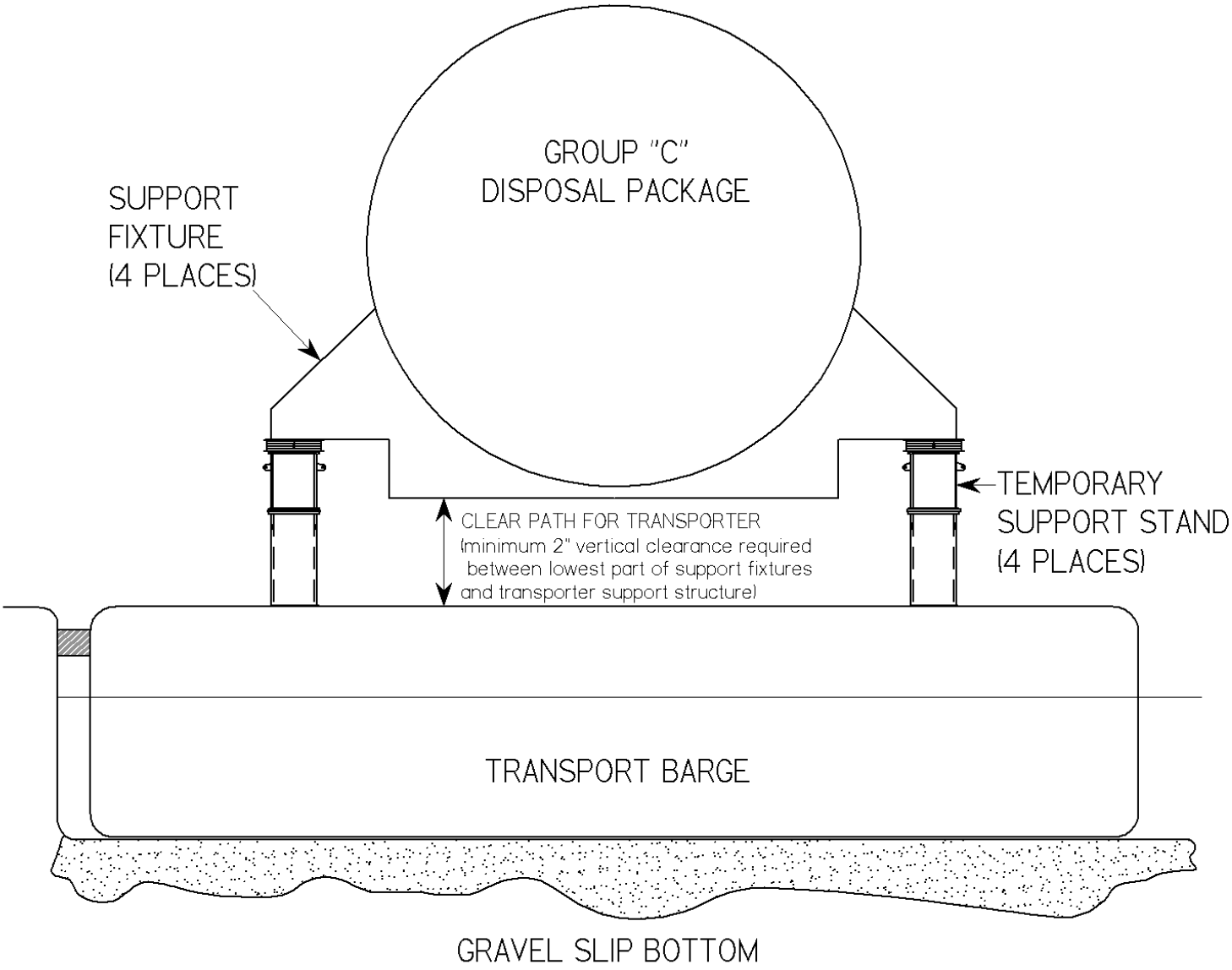

BARGE GROUNDED ON GRAVEL SLIP BOTTOM, PACKAGE READY TO POSITION TRANSPORTER

(END VIEW)

GENERAL NOTES

1. THIS DRAWING WAS DEVELOPED TO DETAIL SUPPORT FIXTURES FOR SSN 688 CLASS REACTOR COMPARTMENT DISPOSAL PACKAGES TO BE UTILIZED DURING TRANSPORT AND FINAL DISPOSITION OF THE PACKAGE.
2. THE DESIGN SHOWN ON THIS DRAWING WERE DEVELOPED FOR THE USS BOSTON (SSN 703) RC DISPOSAL PACKAGE AND ARE GENERALLY APPLICABLE TO OTHER SSN 688 CLASS RC DISPOSAL PACKAGES. THIS CLASS DRAWING WILL BE MADE APPLICABLE TO OTHER SSN 688 CLASS RC DISPOSAL PACKAGES BY ISSUE OF A ENGINEERING AND PLANNING DEPARTMENT DOCUMENT FOR THAT PARTICULAR PROJECT. THE REFERENCE LIST FOR EACH RC DISPOSAL PACKAGE OTHER THAN SSN 703 WILL BE PROVIDED BY THE INVOKING DOCUMENT FOR THAT PARTICULAR PROJECT.
3. ALL FABRICATION, WELDING AND INSPECTION SHALL BE IN ACCORDANCE WITH REFERENCE 1. ALL SIZED WELDS SHALL BE ACCOMPLISHED USING 80XX ELECTRODE.
4. STRUCTURAL CALCULATIONS FOR THESE SUPPORT FIXTURES ARE CONTAINED IN REFERENCE 3.
5. FABRICATION TOLERANCES:
   A. THE BASEPLATES (PC NO.'S 39 - 44) SHALL BE PARALLEL PLANES (WITHIN 1/8 INCH IN 10 FEET) AND SHALL BE PERPENDICULAR (WITHIN 1/8 INCH IN TEN FEET) TO THE SIDEPLATES (PC NO. 1 THRU 8).
   (B) B. THE EXTERIOR REINFORCING FILLET OF THE WELD THAT JOINS PC 19-20 TO PC 1-4 SHOWN IN SECTION 27-A SHALL NOT BE OVERSIZED BY MORE THAN 1/16" (i.e. 1/2" MAXIMUM) FROM THE BASE OF THE FIXTURE (PC 42 & 44) TO THE BOTTOM OF THE JACKING SURFACE (PC 39-40).
6. ALL BURRS AND SHARP EDGES SHALL BE GROUND SMOOTH TO PREVENT INJURY TO PERSONNEL AND DAMAGE TO EQUIPMENT.
7. AN ASTERISK(*) APPEARING OPPOSITE A REFERENCE SIGNIFIES A REQUIRED REFERENCE. REQUIRED REFERENCES ARE THOSE NECCESSARY TO SUPPORT DEVELOPMENT OF ESTIMATES, MATERIAL ORDERING, AND THE ACCOMPLISHMENT OF INDUSTRIAL WORK INCLUDING TESTING.
8. ALL FABRICATION BUTT WELDS IN THE SIDEPLATES (PC NO. 1 THRU 8) SHALL BE 10% MT INSPECTED.
9. UPPER EDGE OF PC NO.'S 49 & 50 ARE NOT TO BE WELDED TO PC NO.'S 29 THRU 32.
10. WHEN REFERRED TO THIS NOTE: ALL ONE SIDED WELDS SHALL BE ACCOMPLISHED USING 2" X 1/4" PERMANENT BACKING BARS.
11. ALL PARTIAL PENETRATION GROOVE WELDS ON THIS DRAWING, ACCOMPLISHED WITH EITHER GMAW, SMAW, OR FCAW PROCESS, SHALL HAVE A BEVEL ANGLE OF 45 DEGREES + 10 - 5 WITH A MINIMUM LAND OF 1/8" AT FIT UP.
12. A. DRILL 3/4" DIAMETER AIR PASSAGE HOLES IN PIECES 17-24, 37 & 38 TO ENSURE EACH
    (C) INTERNAL VOID IS VENTED. PIECES 19-20 & 23-24 EACH REQUIRE TWO VENT HOLES. PIECES 17-18, 21-22 & 37-38 EACH REQUIRE ONE VENT HOLE. SEE ISOMETRIC VIEW 9-A.
    B. DRILL 3/4" DIAMETER DRAINAGE HOLES IN VERTICAL PIECES 9-20 TO ENSURE PROPER WATER DRAINAGE FROM EXPOSED COMPARTMENTS. CENTER THE DRAINAGE HOLES HORIZONTALLY AND 1-1/4" ABOVE HORIZONTAL MEMBERS 27, 28, 42 & 44. SEE ISOMETRIC VIEW 9-A.
13. THE EXTERIOR SURFACES OF THE SUPPORT FIXTURES SHALL BE PRESERVED AFTER PREFABRICATION IN ACCORDANCE WITH THE APPLICABLE TECHNICAL WORK DOCUMENT (TWD).
14. THIS DRAWING REFLECTS DESIGNS PREVIOUSLY APPROVED BY NAVSEA IN DRAWING
    (A) SSN688-100-5286194. IN ACCORDANCE WITH THE NAVSEA DRAWING APPROVAL POLICY STATED IN NAVSEA MANUAL S9213-26-MMA-000(N), APPROVAL AS CONTAINED IN LETTER SER 08D/96-01375 DATED 31 OCT 96 IS EXTENDED TO THIS DRAWING.

FOR OFFICIAL USE ONLY

DISTRIBUTION AUTHORIZED TO U.S. GOVERNMENT AGENCIES AND THEIR CONTRACTORS FOR ADMINISTRATIVE OR OPERATIONAL USE. OTHER REQUESTS FOR THIS DOCUMENT SHALL BE REFERRED TO COMNAVSEASYSCOM

REVISIONS

REV	DESCRIPTION	BY	DATE	APPROVED
A	THIS DRAWING REVISED TO MODIFY MATERIAL LIST AND CHANGED NOTE 14.	L.OWENS /S/ ALLEN	12/10/01	/S/ M. LAIRD
B	MODIFIED PIECES 1-12 & 45-48. CORRECTED WEIGHTS ON SHT 2. MODIFIED GENERAL NOTE 5. B. ADDED 24 HOUR MT TO INSTALLATION NOTE 4. CHANGED JACK ATTACHMENT HOLE DRILLING PATTERN (DET. 29-B, 31-C). ADDED DETAIL 26-C, PLAN 29-A. MODIFIED INBOARD ROLLER SUPPORTS (DETAIL 25-A, 25-C). MISC MINOR CORRECTIONS.	PASTERNAK 03-21-03 /S/ T. ALLEN		/S/ M. LAIRD
C	MODIFIED GENERAL NOTE 12. ADDED DRAIN AND AIR PASSAGE HOLES TO ISOMETRIC 9-A. CHANGED 24 HR MT TO A 7 DAY MT IN INSTALLATION NOTE 4. CHANGED ALTERNATE WELDS IN SECTION 19-A AND 23-A. CHANGED WELDS IN SECTION 27-A AND PLAN VIEW 29-A.	8/13/10 / 8/13/10 / 8/13/10	8/13/10	For

NO	HULL	TITLE	IDENT
3	688CL	CALCS - RCDP SUPPORT FIXTURES	250.3(DA)-01/004
2	688CL	PRESSURE HULL FR 56 3/4 - 101 1/4	100-4403238W
*1	STD	WELD, FAB, & INSP FOR RC DISP STRUCT	150-7281535 B

REFERENCES

C	B	C	B	C	C	C	C								
B	B	B	B	B	B	B	B								
A	A	-	-	-	-	-	-								
-	-	-	-	-	-	-	-								
1	2	3	4	5	6	7	8					SSN688CL	-	N/A	
												SHIP	REV	SHIPCK BY	DT

REVISION STATUS OF SHEETS

SHIP APPLICABILITY

PUGET SOUND NAVAL SHIPYARD
BREMERTON, WA 98314

CODE 250.32 | PHONE 6-0113

		DATE
PREPARED	L.OWENS	
CHECKED	DAVID B. BUSH /S/	10-29-01
ENGINEER	T. ALLEN /S/	10-29-01
APPROVED	M.C. LAIRD /S/	10-29-01

ACCEPTED FOR NAVSEA
N/A

APPROVED BY NAVSEA
SEE NOTE 14

DEPARTMENT OF THE NAVY
NAVAL SEA SYSTEMS COMMAND
WASHINGTON D.C. 02382

SSN 688 CLASS

RC DISPOSAL PACKAGE SUPPORT FIXTURES

RC DISP PKG SUPPORT FIXTURE

SIZE	FSCM NO.	WTGRP	NAVSEA DRAWING NO.	REV
C	53711	100	7425884	C

SCALE: NONE | SHEET 1 OF 8

PY MASTER

810-304

LIST OF MATERIAL (QUANTITY FOR ONE RC DISPOSAL PACKAGE)

	PC NO.	REQ QTY	DESCRIPTION		MATERIAL SPEC	MATL REQ	WEIGHT UNIT	WEIGHT TOT	REMARKS
BA	1	2	PLATE, 40.8#	99.1 SQ FT	ABS GR-DH-36, CL-U	HS	4043.3	8086.6	
BA	2	2		99.1 SQ FT			4043.3	8086.6	
BA	3	2		99.1 SQ FT			4043.3	8086.6	
BA	4	2		99.1 SQ FT			4043.3	8086.6	
BA	5	1		2.8 SQ FT			115.6	115.6	
BA	6	1		2.8 SQ FT			115.6	115.6	
BA	7	1		2.8 SQ FT			115.6	115.6	
BA	8	1		2.8 SQ FT			115.6	115.6	
B	9	2	PLATE, 61.2#	10" x 27 3/8"			116.3	232.6	
B	10	2	PLATE, 81.6#	8" x 45 1/4"			205.1	410.2	
B	11	2	PLATE, 61.2#	17 1/2" x 27 3/8"			203.6	407.2	
B	12	2	PLATE, 81.6#	15 1/2" x 45 1/4"			397.5	795.0	
	13	2	PLATE, 40.8#	30 1/2" x 27 3/8"			236.6	473.1	
	14	2		30 1/2" x 45 1/4"			391.0	782.1	
	15	2		27 3/8" x 50 5/8"			392.7	785.3	
	16	2		45 1/4" x 50 5/8"			649.1	1298.1	
	17	2		27 3/8" x 79 3/8"			615.7	1231.3	
	18	2		45 1/4" x 79 3/8"			1017.7	2035.3	
A	19	2		31 3/8" x 9'-7 13/16"			953.9	1907.9	
A	20	2		49 1/4" x 9'-7 13/16"			1540.5	3081.0	
	21	2	PLATE, 81.6#	27 3/8" x 91 3/8"			1417.5	2834.9	
	22	2		45 1/4" x 91 3/8"			2343.0	4686.0	
	23	2	PLATE, 51.0#	27 3/8" x 60 7/8"			590.2	1180.4	
	24	2		45 1/4" x 60 7/8"			975.6	1951.2	
	25	2	PLATE, 40.8#	31 3/8" x 10'-0 3/4"			1073.4	2146.8	
	26	2		49 1/4" x 10'-0 3/4"			1685.0	3369.9	
A	27	2		23" x 27 3/8"			178.4	356.8	
A	28	2		23" x 45 1/4"			294.9	589.8	
	29	2		27 1/2" x 27 3/8"			213.3	426.6	
	30	2		27 1/2" x 45 1/4"			352.6	705.1	
	31	2		28 3/4" x 27 3/8"			223.0	446.0	
	32	2		28 3/4" x 45 1/4"			368.6	737.2	
	33	2		34" x 27 3/8"			263.7	527.4	
	34	2		34" x 45 1/4"			435.9	871.8	
	35	2		26 1/2" x 31 3/8"			235.6	471.1	
	36	2		26 1/2" x 49 1/4"			369.8	739.6	
A	37	2		23" x 27 3/8"			178.4	356.8	
A	38	2		23" x 45 1/4"			294.9	589.8	
	39	2	PLATE, 71.4#	38 3/8" x 95 1/2"			1485.7	2971.3	
	40	2		56 1/4" x 95 1/2"			2332.1	4664.2	

	PC NO.	QTY REQ	DESCRIPTION		MATERIAL SPEC	MATL REQ	WEIGHT UNIT	WEIGHT TOT	REMARKS
B	41	1	PLATE, 40.8#	31 3/8" x 34"	ABS GR-DH-36, CL-U	HS	302.3	302.3	
B	42	2		31 3/8" x 13'-7"			1449.0	2898.0	
B	43	1		49 1/4" x 34"			474.4	474.4	
B	44	2		49 1/4" x 13'-7"			2274.5	4549.0	
B	45	1		7" x 31 3/8"			62.2	62.2	
B	46	1		7" x 49 1/4"			97.7	97.7	
B	47	2	PLATE, 81.6#	6" x 45 1/4"			153.9	307.8	
B	48	2		9" x 45 1/4"			230.8	461.6	
	49	4		27 1/2" x 24 1/2"			381.8	1527.2	
	50	4		28 3/4" x 24 1/2"			399.1	1596.6	

APPROXIMATE SUPPORT FIXTURE WEIGHTS

BA FWD FIXTURE PAIR = 37,984#
BA AFT FIXTURE PAIR = 51,163#

SIZE	FSCM NO.	WT GRP	NAVSEA DRAWING NO.	REV
C	53711	100	7425884	B
SCALE: NONE		BSCI	SHEET 2	

INSTALLATION NOTES

(B) 1. THE TRIM MARGIN (APPROXIMATELY 2") ON PC NO'S 1-8 & 25-26 ALLOWS PREFABRICATED FIXTURES TO BE TEMPLATED DIRECTLY FROM THE HULL FOR FINAL INSTALLATION.

2. INSTALLATION TOLERANCES WILL BE SPECIFIED IN THE APPLICABLE FIXTURE INSTALLATION TECHNICAL WORK DOCUMENT.

3. GREAT CARE SHALL BE TAKEN TO MINIMIZE DISTORTION CAUSED BY WELDING DURING THE SUPPORT FIXTURE ATTACHMENT TO THE RC PACKAGE. FIT UP SHALL BE SUCH THAT THE ROOT OPENING IS A MINIMUM OF 1/4" AND A MAXIMUM OF 5/8" IN ACCORDANCE WITH REFERENCE 1. CONTROLLED WELD SEQUENCE METHODS SUCH AS BLOCK WELD AND BACK STEPPING SHALL BE USED AS REQUIRED.

(B)(C) 4. FOR WELDS ATTACHING FIXTURES TO THE HY-80 HULL, SEE GENERAL NOTE 10 AND DETAIL 32-A. MT INSPECTION OF FINAL WELD SURFACE SHALL BE IN ACCORDANCE WITH REFERENCE 1, EXCEPT THAT 100% OF THE WELD LENGTH SHALL BE INSPECTED NO SOONER THAN 7 DAYS AFTER THE WELDS HAVE COOLED TO AMBIENT TEMPERATURE.

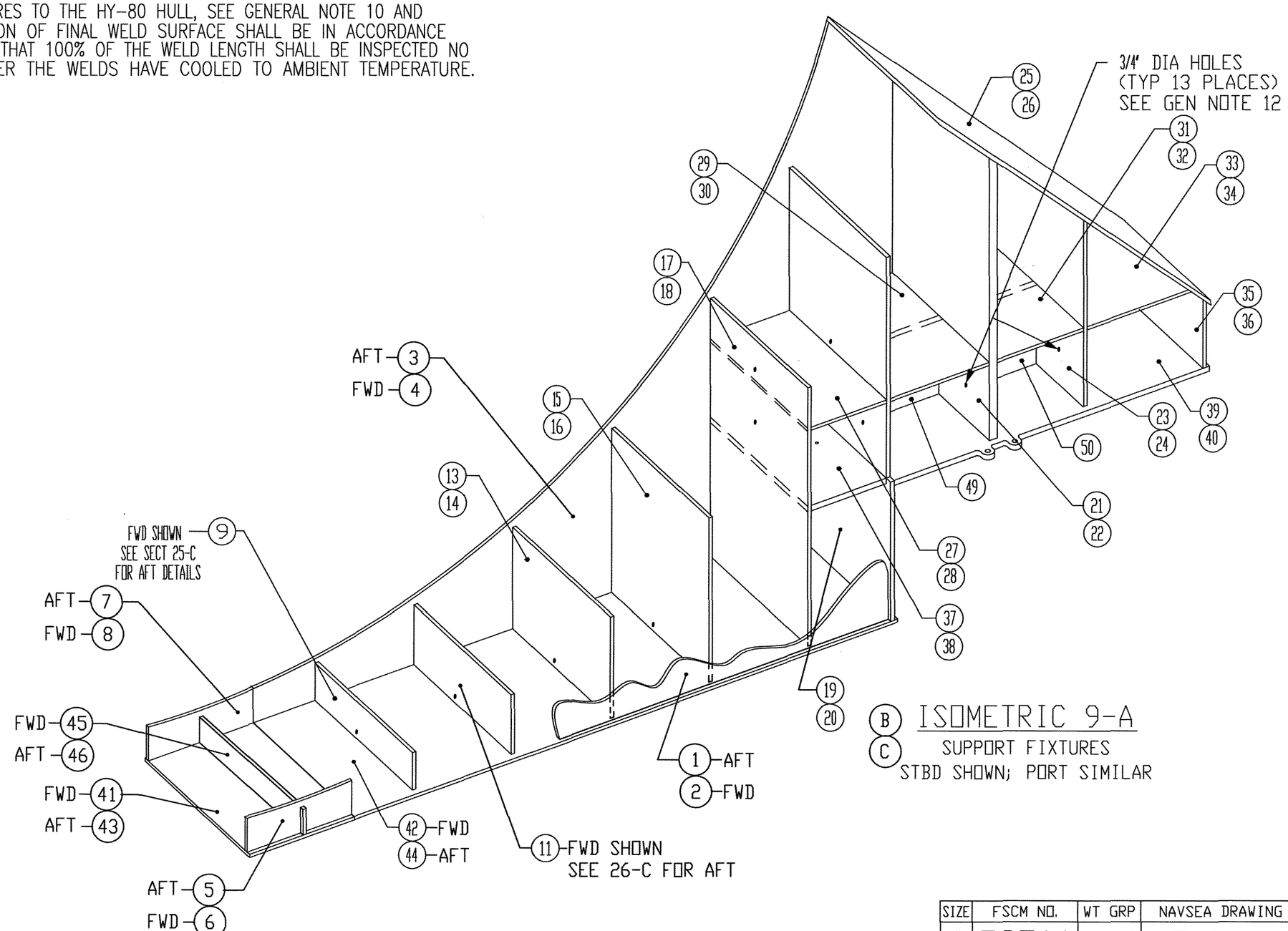

(B)(C) ISOMETRIC 9-A
SUPPORT FIXTURES
STBD SHOWN; PORT SIMILAR

SIZE	FSCM NO.	WT GRP	NAVSEA DRAWING NO.	REV
C	53711	100	7425884	C
SCALE: NONE		BSCI	SHEET 3	

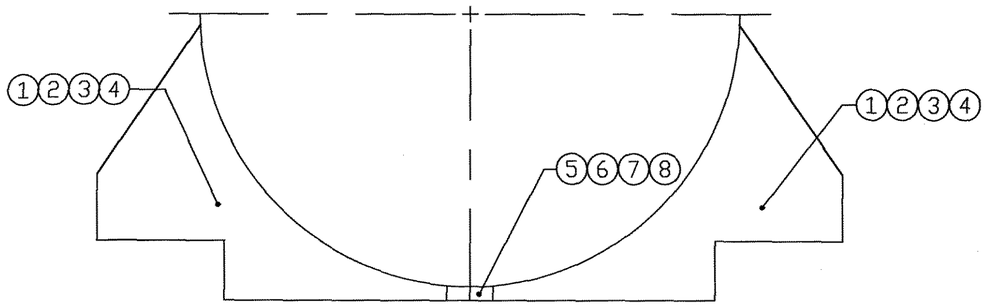

(B) ELEVATION 15-C (13-A)

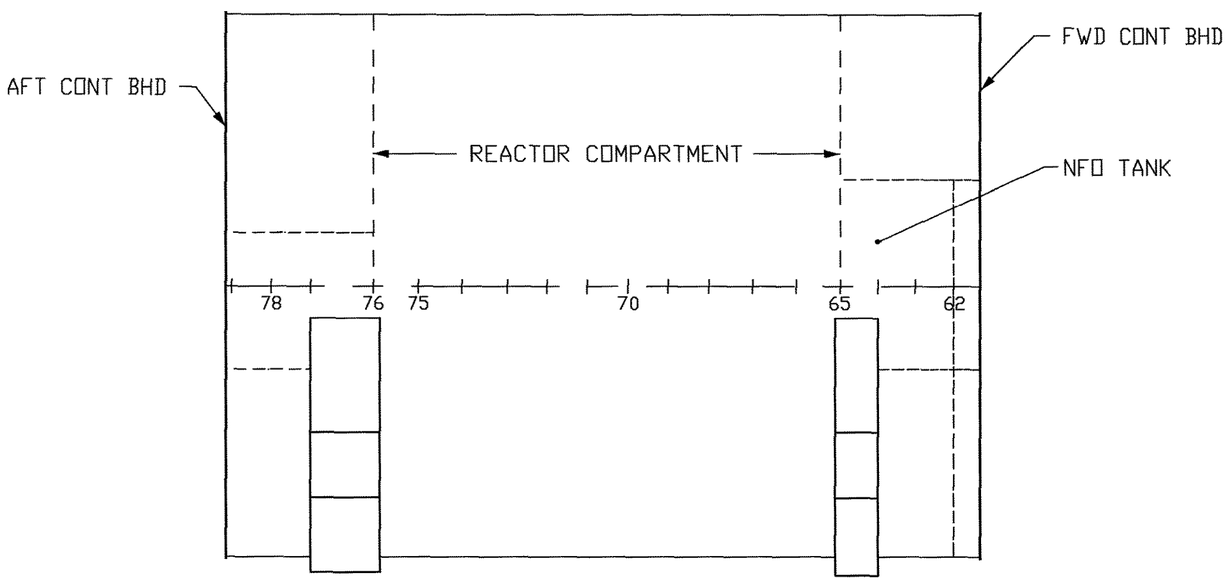

KEY ELEVATION 15-A
SUPPORT FIXTURES

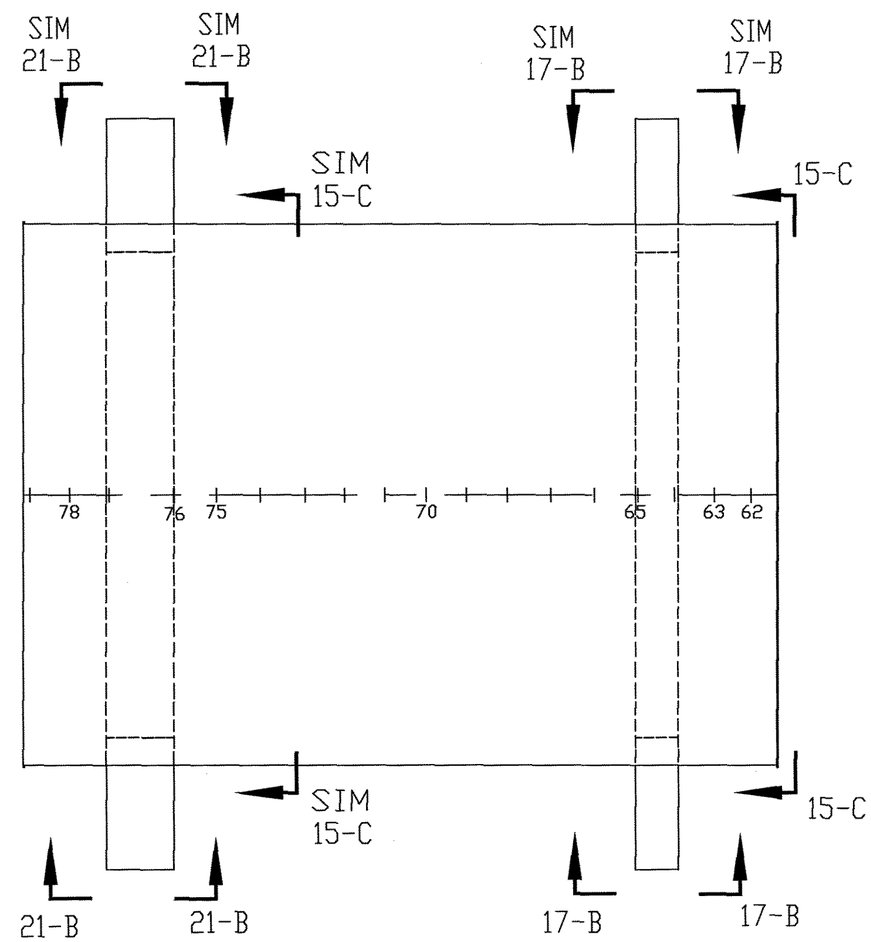

KEY PLAN 13-A
SUPPORT FIXTURES

SIZE	FSCM NO.	WT GRP	NAVSEA DRAWING NO.	REV
C	53711	100	7425884	B
SCALE: NONE		BSCI	SHEET 4	

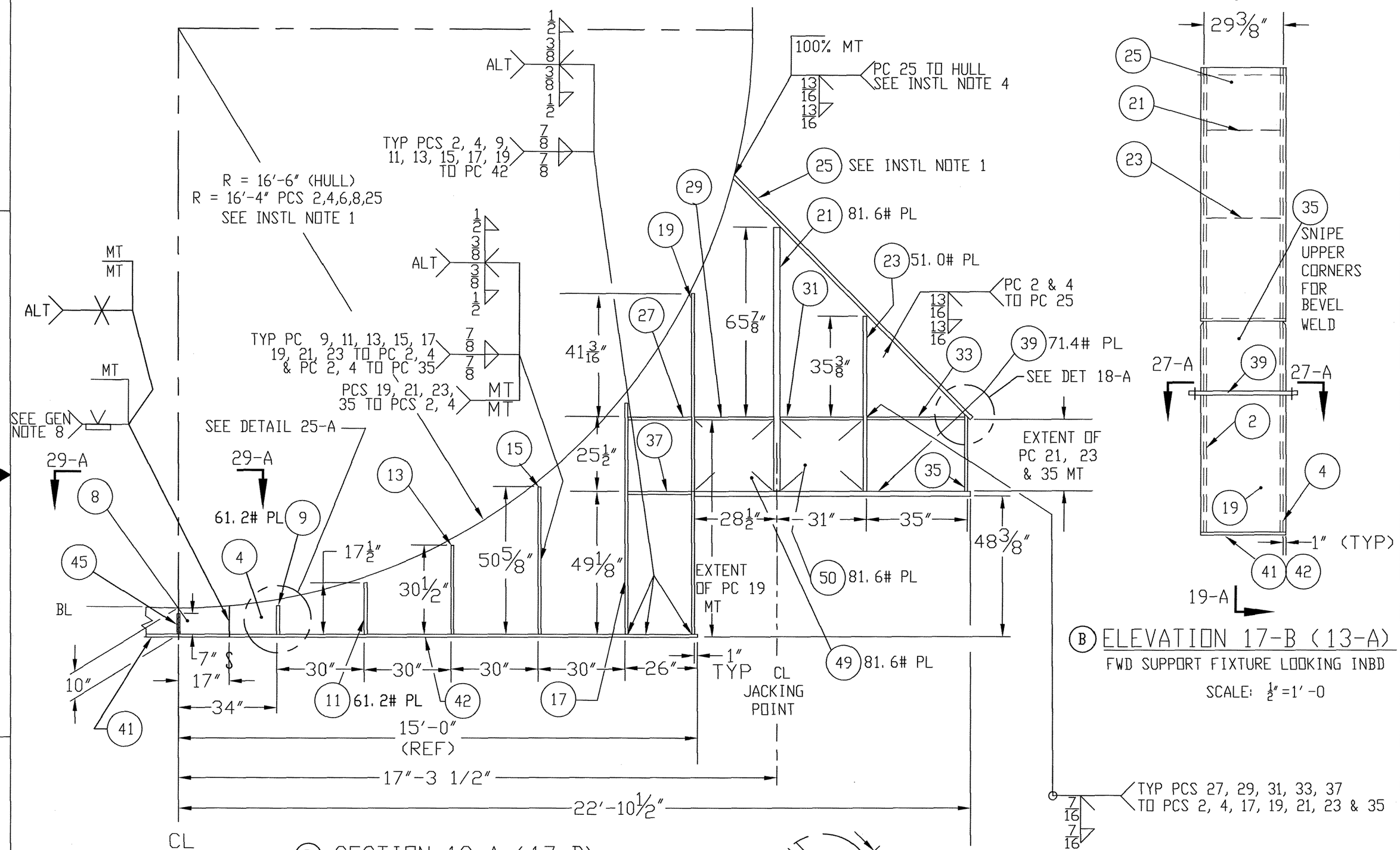

(B) SECTION 19-A (17-B)
(C) FWD SUPPORT FIXTURE - LKG FWD
ALL MATERIAL IS 40.8# HS PL
UNLESS OTHERWISE NOTED
STBD SIDE SHOWN; PORT SIMILAR
SCALE: 1/2" = 1'-0"

(B) ELEVATION 17-B (13-A)
FWD SUPPORT FIXTURE LOOKING INBD
SCALE: 1/2" = 1'-0

TYP PCS 27, 29, 31, 33, 37 TO PCS 2, 4, 17, 19, 21, 23 & 35
7/16
7/16

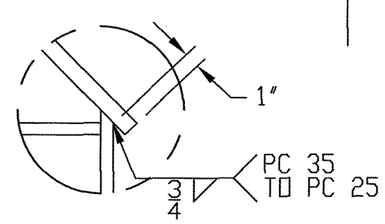

DETAIL 18-A

SIZE	FSCM NO.	WT GRP	NAVSEA DRAWING NO.	REV
C	53711	100	7425884	C
SCALE: AS SHOWN		BSCI	SHEET 5	

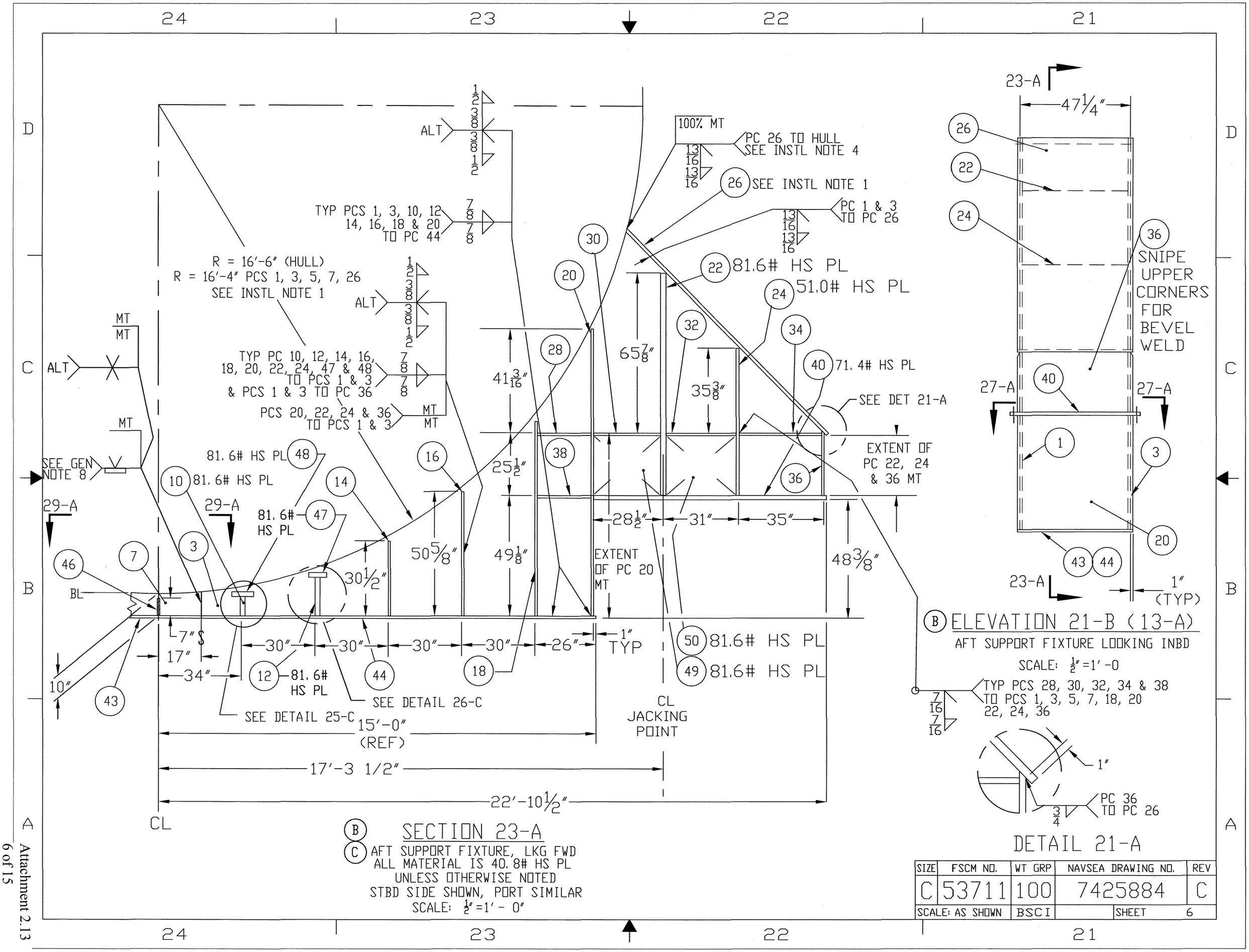

SIZE	FSCM NO.	WT GRP	NAVSEA DRAWING NO.	REV
C	53711	100	7425884	C
SCALE: AS SHOWN		BSCI	SHEET 6	

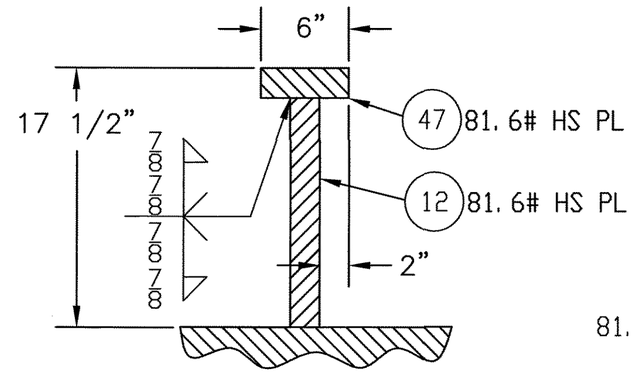

(B) DETAIL 26-C (9-A, 23-A)

SCALE: 1½" = 1'-0

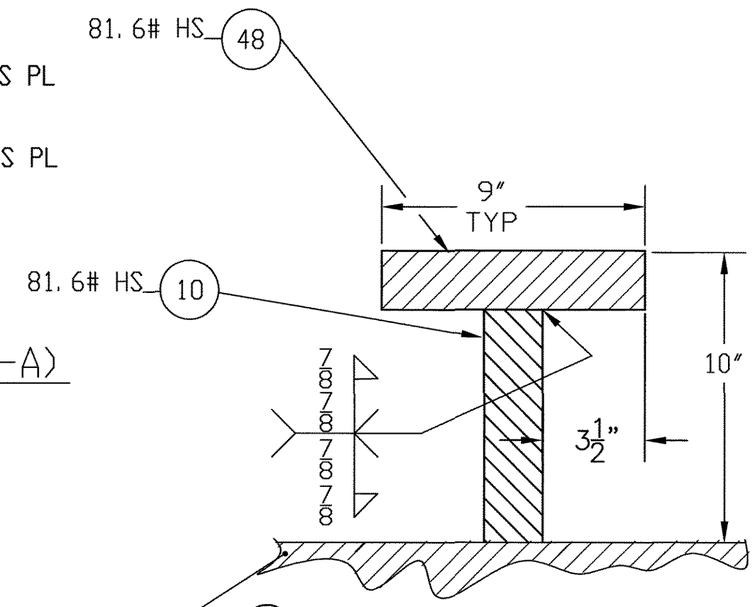

(B) DETAIL 25-C (9-A, 23-A)

SCALE: 3" = 1'-0

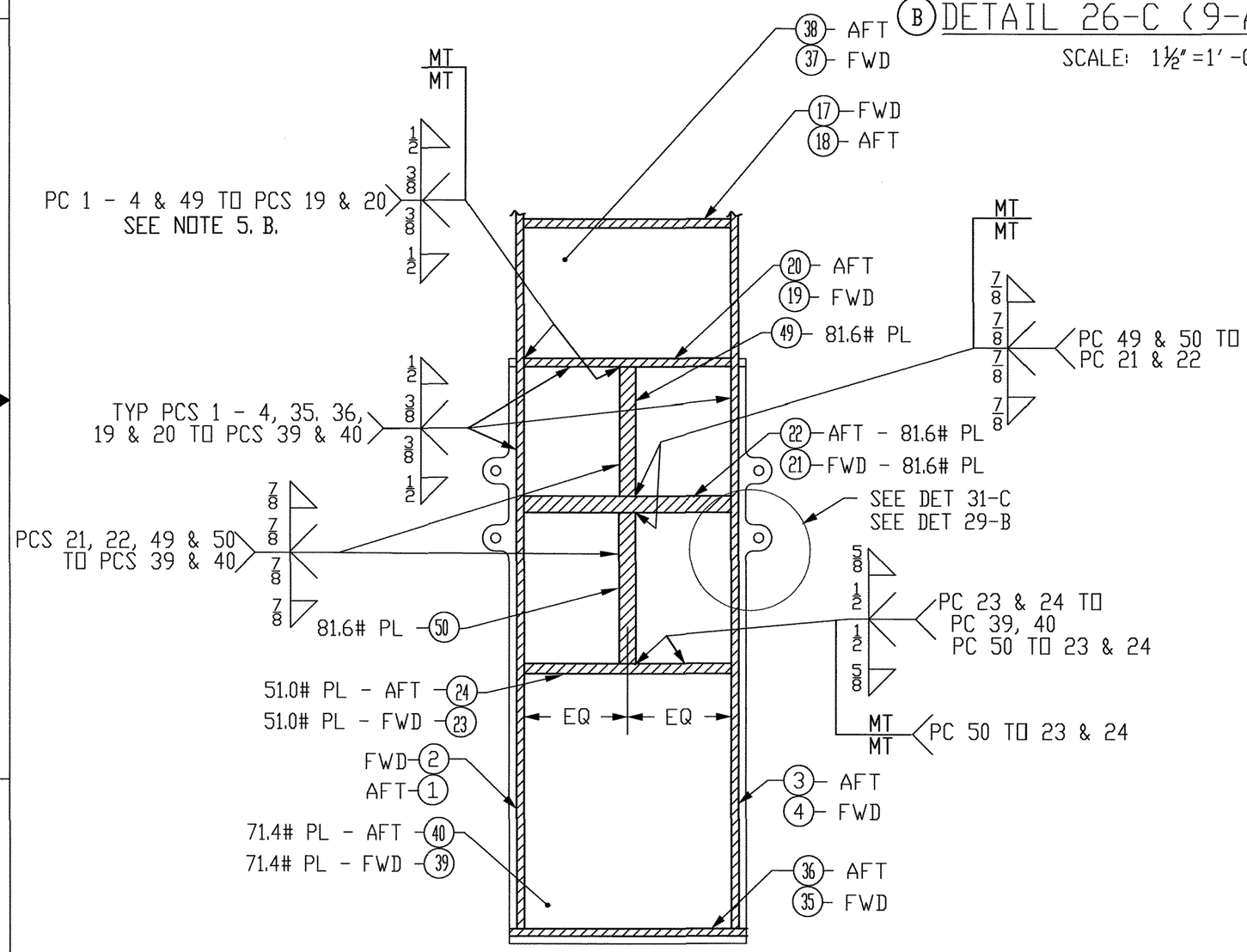

(B) (C) SECTION 27-A (17-B & 21-B)

SUPPORT FIXTURE
ALL MATERIAL IS 40.8 # PL
UNLESS OTHERWISE NOTED
SCALE: NONE

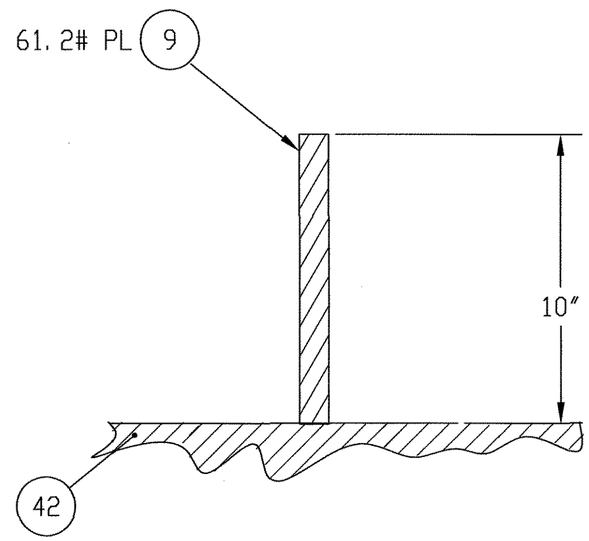

(B) DETAIL 25-A (19-A)

SCALE: 3" = 1'-0

SIZE	FSCM NO.	WT GRP	NAVSEA DRAWING NO.	REV
C	53711	100	7425884	C
SCALE: AS SHOWN		BSCI	SHEET 7	

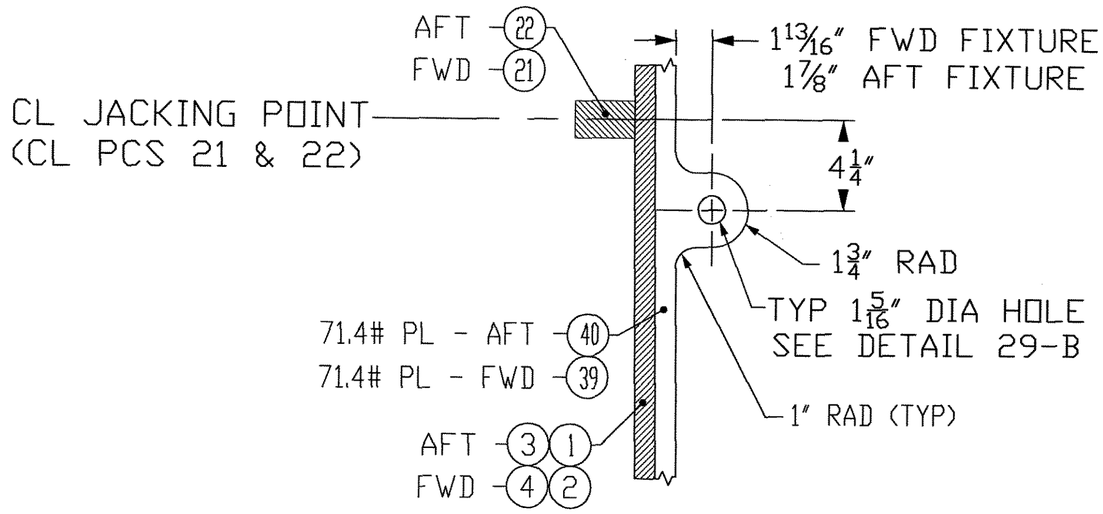

B DETAIL 31-C (27-A)

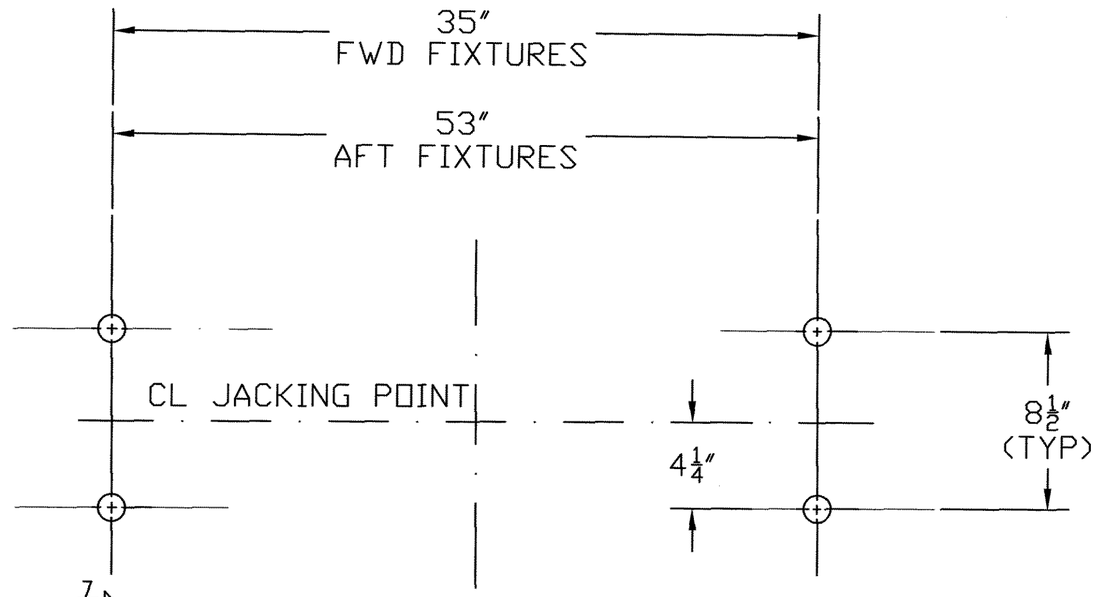

B DETAIL 29-B (31-C)
DRILLING PATTERN

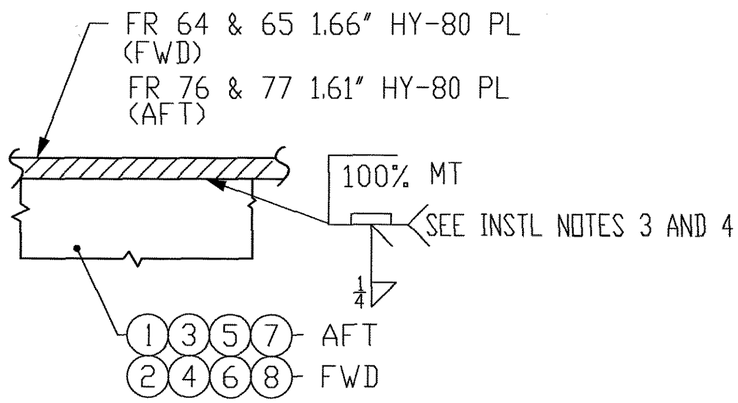

DETAIL 32-A
TYPICAL SIDEPLATE HULL ATTACHMENT

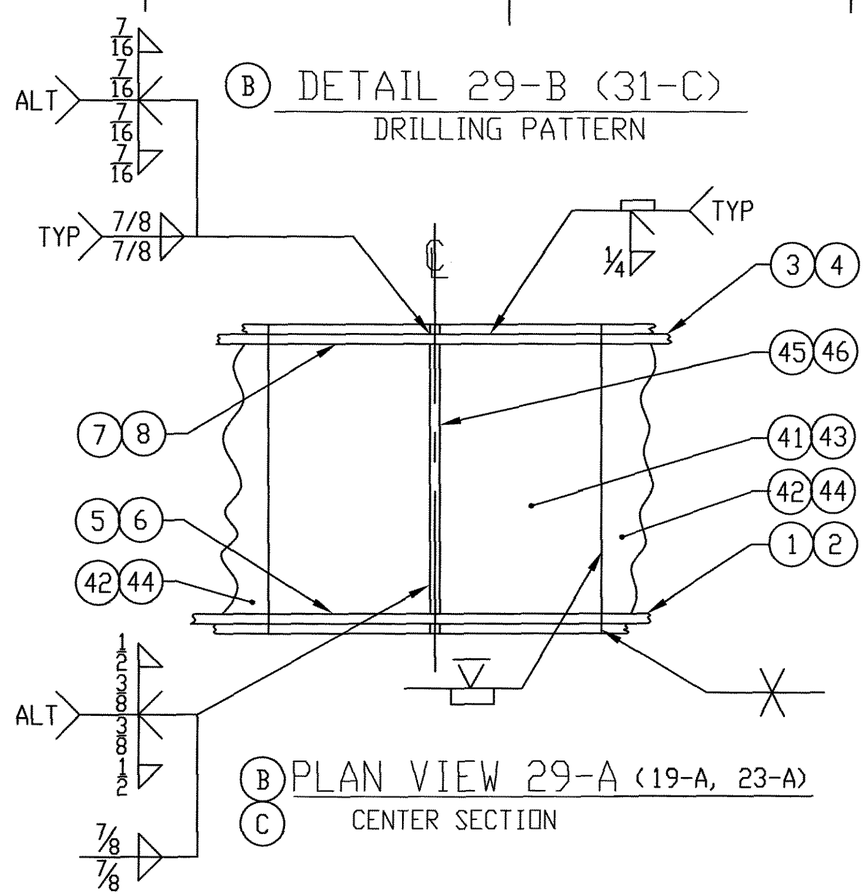

B C PLAN VIEW 29-A (19-A, 23-A)
CENTER SECTION

SIZE	FSCM NO.	WT GRP	NAVSEA DRAWING NO.	REV
C	53711	100	7425884	C
SCALE: NONE		BSCI	SHEET 8	

GENERAL NOTES

1. THIS DRAWING DETAILS THE SUPPORT FIXTURES FOR THE SSN 671 (USS NARWHAL) REACTOR COMPARTMENT DISPOSAL PACKAGE TO BE UTILIZED DURING TRANSPORT AND FINAL DISPOSITION OF THE PACKAGE.
2. ALL FABRICATION, WELDING AND INSPECTION SHALL BE IN ACCORDANCE WITH REFERENCE 1.
3. STRUCTURAL CALCULATIONS FOR THESE SUPPORT FIXTURES ARE CONTAINED IN REFERENCE 4.
4. ALL WELDS SHOWN ON THIS DRAWING SHALL BE ACCOMPLISHED USING 80XX ELECTRODE (MINIMUM) , EXCEPT FULL PENETRATION BUTT WELDS , PERMANENT BACKING BAR BUTT WELDS , AND INSTALLATION WELDS (DETAIL 28-A) MAY BE ACCOMPLISHED USING 70XX ELECTRODE .
5. FABRICATION TOLERANCES:
   A. THE BASEPLATES (PC NO.'S 20, 21 & 22) SHALL BE PARALLEL PLANES (WITHIN 1/8 INCH IN 10 FEET) AND SHALL BE PERPENDICULAR (WITHIN 1/8 INCH IN TEN FEET) TO THE SIDEPLATES (PC NO. 1 & 2).
   (A) B. THE EXTERIOR REINFORCING FILLET OF THE WELD THAT JOINS PC 10 TO PC 1 & 2, SHOWN IN SECTION 23-A, SHALL NOT BE OVERSIZED BY MORE THAN $\frac{1}{16}$" (i.e.$\frac{1}{2}$" FILLET MAX) FROM THE BASE OF THE FIXTURE (PC. 21) TO THE BOTTOM OF THE JACKING SURFACE (PC 20).
6. ALL BURRS AND SHARP EDGES SHALL BE GROUND SMOOTH TO PREVENT INJURY TO PERSONNEL AND DAMAGE TO EQUIPMENT.
7. AN ASTERISK(*) APPEARING OPPOSITE A REFERENCE SIGNIFIES A REQUIRED REFERENCE. REQUIRED REFERENCES ARE THOSE NECCESSARY TO SUPPORT DEVELOPMENT OF ESTIMATES, MATERIAL ORDERING, AND THE ACCOMPLISHMENT OF INDUSTRIAL WORK INCLUDING TESTING.
8. ALL FABRICATION BUTT WELDS IN THE SIDEPLATES (PC NO. 1 & 2) SHALL BE 10% MT INSPECTED.
9. UPPER EDGE OF PC NO.'S 25 & 26 ARE NOT TO BE WELDED TO PC NO.'S 15 & 16.
10. WHEN REFERRED TO THIS NOTE: ALL ONE SIDED WELDS SHALL BE ACCOMPLISHED USING 2" X 1/4" PERMANENT BACKING BARS.
11. ALL PARTIAL PENETRATION GROOVE WELDS ON THIS DRAWING, ACCOMPLISHED WITH EITHER GMAW, SMAW, OR FCAW PROCESS, SHALL HAVE A BEVEL ANGLE OF 45° DEGREES + 10° - 5° WITH A MINIMUM LAND OF 1/8" AT FIT UP.
12. DRILL 3/4" DIAMETER AIR PASSAGE HOLES IN ALL INTERNAL HORIZONTAL PLATES (PC NO.'S 14 - 17 & 19) TO ENSURE EACH INTERNAL VOID IS VENTED. HOLES IN THE PLATES SHALL BE CENTERED OVER EACH VOID. SEE ISOMETRIC 9-A.
13. THE EXTERIOR SURFACES OF THE SUPPORT FIXTURES SHALL BE PRESERVED AFTER PREFABRICATION IN ACCORDANCE WITH THE APPLICABLE TECHNICAL WORK DOCUMENT (TWD).
14. THIS DRAWING REFLECTS DESIGNS PREVIOUSLY APPROVED BY NAVSEA IN DRAWING SSN688-100-5286194. IN ACCORDANCE WITH THE NAVSEA DRAWING APPROVAL POLICY STATED IN NAVSEA MANUAL S9213-26-MMA-000(N), APPROVAL AS CONTAINED IN LETTER SER 08D/96-01375 DATED 31 OCT 96 IS EXTENDED TO THIS DRAWING.

REVISIONS

REV	DESCRIPTION	BY	DATE	APPROVED
A	MODIFIED PC 5 & 23. DELETED PC 24. MODIFIED GEN. NOTE 5.B. ADDED 24 HOUR MT TO INSTALLATION NOTE 4. ADDED DETAIL 18-A, PLAN 21-C. MODIFIED INBOARD ROLLER SUPPORTS (SECTION 19-A, DETAIL 21-A).	PASTERNAK 04-07-03		

NO	HULL	TITLE	IDENT
4	671	CALCS - RCDP SUPPORT FIXTURES	250.3 (DA) - 02/004
3	671	PRESSURE HULL FR 65 - FR 109	100-2044107
2	671	PRESSURE HULL FR 13 - FR 65	100-2044106
*1	STD	WELD, FAB, & INSP FOR RC DISP STRUCT	150-7281535 B

REFERENCES

| REVISION STATUS OF SHEETS | | |

LIST OF MATERIAL (QUANTITY FOR ONE RC DISPOSAL PACKAGE)

PC NO.	REQ QTY	DESCRIPTION	MATERIAL SPEC	MATL REQ	WEIGHT UNIT	WEIGHT TOT	REMARKS
1	4	PLATE, 40.8# 99.1 SQ FT	ABS GR-DH-36, CL-U	HS	4043.3	16,173.1	
2	4	99.1 SQ FT			4043.3	16,173.1	
3	2	ABT 12" X 34"			115.6	231.2	
4	2	ABT 12" X 34"			115.6	231.2	
(A) 5	4	PLATE, 81.6# 10" × 29"			164.3	657.3	
6	4	PLATE, 40.8# 17 1/2" x 29"			143.8	575.2	
7	4	30 1/2" x 29"			250.6	1002.4	
8	4	29" x 50 5/8"			416.0	1663.9	
9	4	29" x 79 3/8"			652.2	2608.8	
10	4	33" x 9'-7 13/16"			1007.3	4029.1	
11	4	PLATE, 81.6# 29" x 91 3/8"			1501.6	6006.4	
12	4	PLATE, 51.0# 29" x 60 7/8"			625.2	2501.0	
13	4	PLATE, 40.8# 33" x 10'-0 3/4"			1129.0	4516.0	
14	4	23" × 29"			189.0	755.9	
15	4	27 1/2" x 29"			226.0	903.8	
16	4	28 3/4" x 29"			236.2	944.9	
17	4	34" × 29"			279.4	1117.5	
18	4	26 1/2" x 33"			247.8	991.1	
19	4	23" × 29"			189.0	755.9	
20	4	PLATE, 71.4# 40" x 95 1/2"			1584.2	6336.9	
21	4	PLATE, 40.8# 33" × 13'-7"			1524.1	6096.2	
22	2	33" × 34"			317.9	635.8	
(A) 23	2	7" × 33"			65.5	130.9	
(A) 24							
25	4	PLATE, 81.6# 27 1/2" x 24 1/2"			381.8	1527.2	
26	4	28 3/4" x 24 1/2"			399.1	1596.6	

PC NO.	QTY REQ	DESCRIPTION	MATERIAL SPEC	MATL REQ	WEIGHT UNIT	WEIGHT TOT	REMARKS

APPROXIMATE SUPPORT FIXTURE ASSEMBLY WEIGHTS

FWD FIXTURE (EACH) = 19,291 LB.
AFT FIXTURE (EACH) = 19,291 LB.
CENTER SECTION (EACH) = 507 LB.

TOTAL WEIGHT = 78,178 LB.

SIZE	FSCM NO.	WT GRP	NAVSEA DRAWING NO.	REV
C	53711	100	7281526	A
SCALE: NONE		BSCI	SHEET 2	

INSTALLATION NOTES

1. THE TRIM MARGIN (APPROXIMATELY 2") ON PC NO'S 1 THRU 4 ALLOWS PREFABRICATED FIXTURES TO BE TEMPLATED DIRECTLY FROM THE HULL FOR FINAL INSTALLATION.
2. INSTALLATION TOLERANCES WILL BE SPECIFIED IN THE APPLICABLE FIXTURE INSTALLATION TECHNICAL WORK DOCUMENT.
3. GREAT CARE SHALL BE TAKEN TO MINIMIZE DISTORTION CAUSED BY WELDING DURING THE SUPPORT FIXTURE ATTACHMENT TO THE RC PACKAGE. FIT UP SHALL BE SUCH THAT THE ROOT OPENING IS A MINIMUM OF 1/4" AND A MAXIMUM OF 5/8" IN ACCORDANCE WITH REFERENCE 1. CONTROLLED WELD SEQUENCE METHODS SUCH AS BLOCK WELD AND BACK STEPPING SHALL BE USED AS REQUIRED.

Ⓐ 4. FOR WELDS ATTACHING FIXTURES TO THE HY-80 HULL, SEE GENERAL NOTE 10 AND DETAIL 28-A. MT INSPECTION OF FINAL WELD SURFACE SHALL BE IN ACCORDANCE WITH REFERENCE 1, EXCEPT THAT 100% OF THE WELD LENGTH SHALL BE INSPECTED NO SOONER THAN 24 HRS. AFTER THE WELDS HAVE COOLED TO AMBIENT TEMPERATURE.

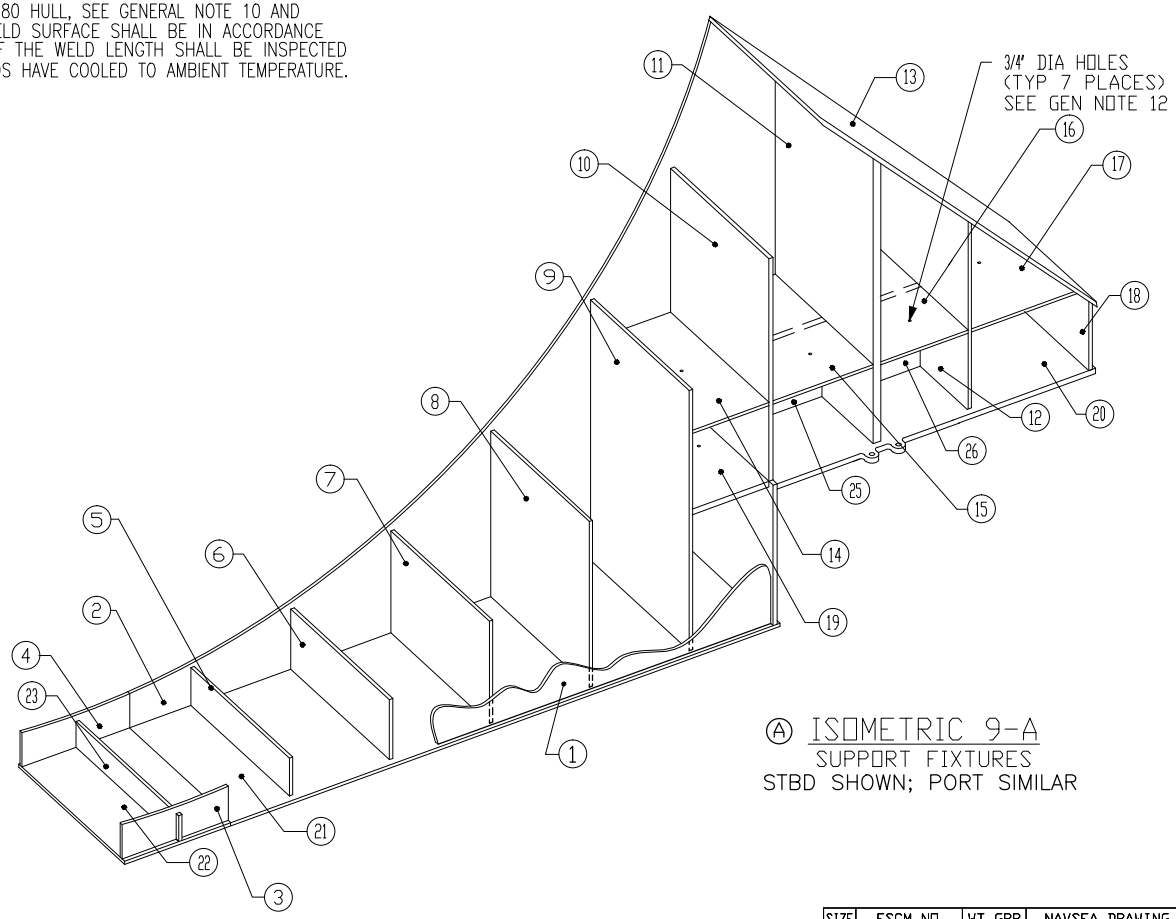

Ⓐ ISOMETRIC 9-A
SUPPORT FIXTURES
STBD SHOWN; PORT SIMILAR

SIZE	FSCM NO.	WT GRP	NAVSEA DRAWING NO.	REV
C	53711	100	7281526	A
SCALE: NONE		BSCI	SHEET 3	

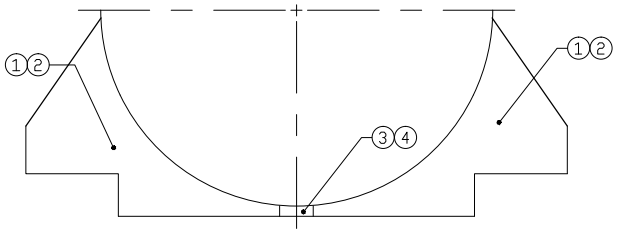

ELEVATION 15-C (13-A)

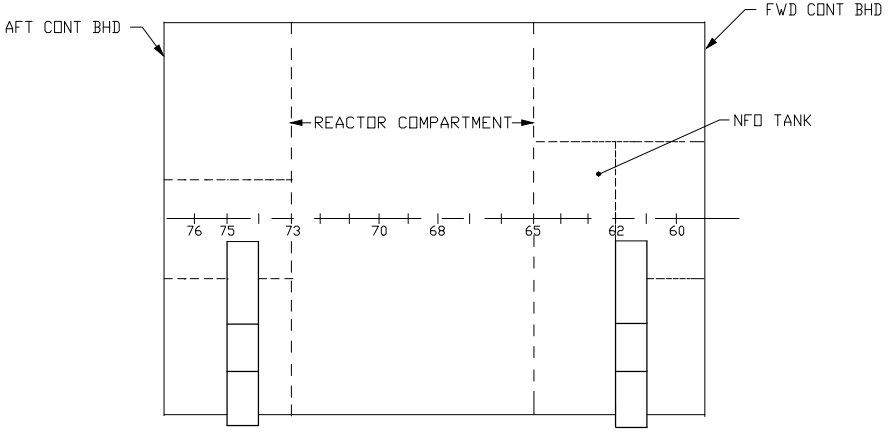

KEY ELEVATION 15-A
SUPPORT FIXTURES

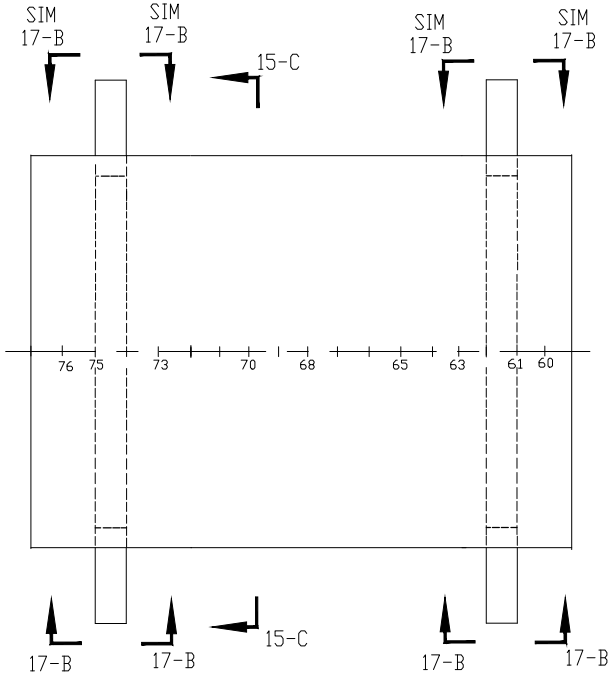

KEY PLAN 13-A
SUPPORT FIXTURES

SIZE	FSCM NO.	WT GRP	NAVSEA DRAWING NO.	REV
C	53711	100	7281526	-
SCALE: NONE		BSCI	SHEET 4	

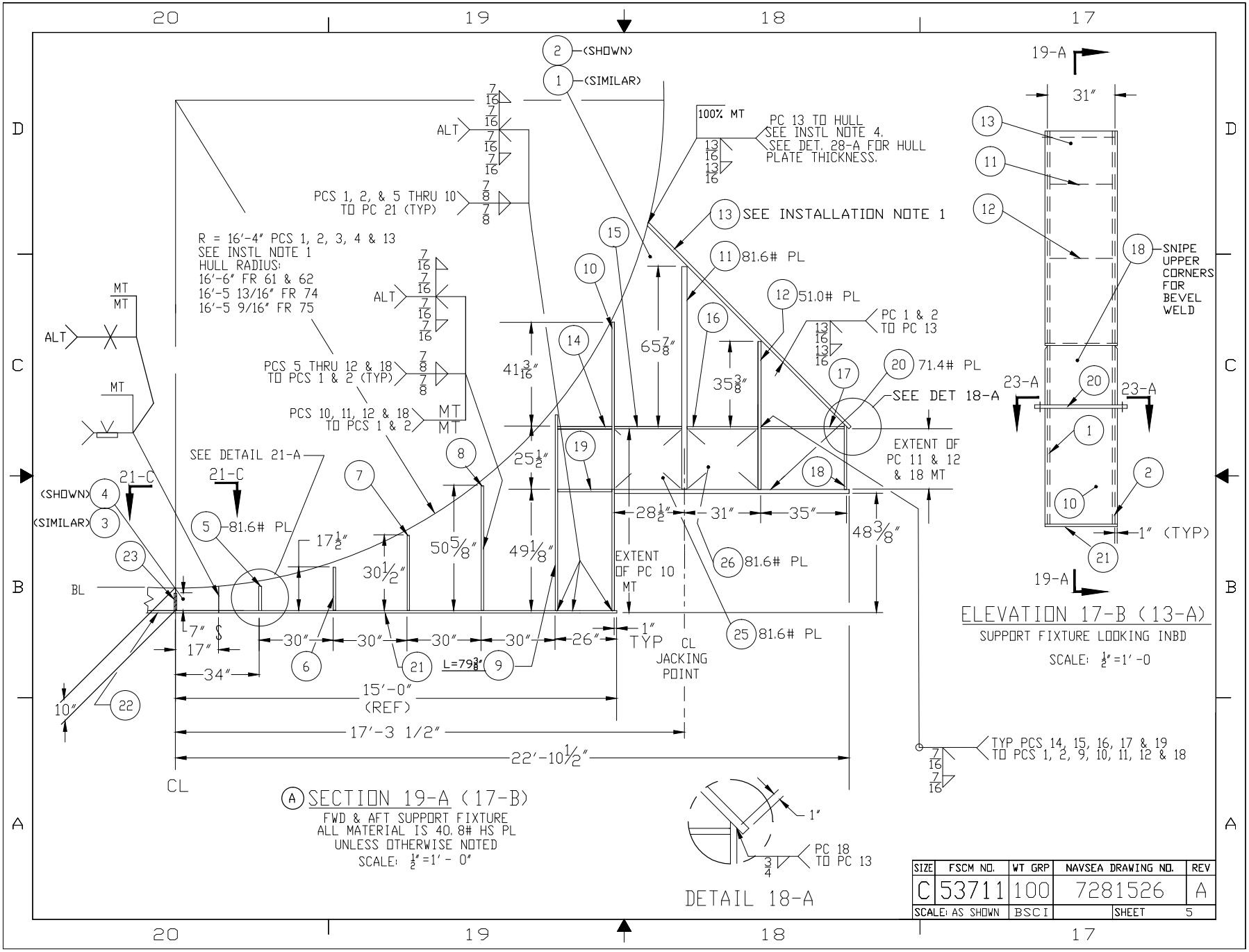

SECTION 19-A (17-B)
FWD & AFT SUPPORT FIXTURE
ALL MATERIAL IS 40.8# HS PL
UNLESS OTHERWISE NOTED
SCALE: 1/2"=1'-0"
ELEVATION 17-B (13-A)
SUPPORT FIXTURE LOOKING INBD
SCALE: 1/2"=1'-0
DETAIL 18-A
PC 13 TO HULL
SEE INSTL NOTE 4.
SEE DET. 28-A FOR HULL
PLATE THICKNESS.
100% MT
SEE INSTALLATION NOTE 1
R = 16'-4" PCS 1, 2, 3, 4 & 13
SEE INSTL NOTE 1
HULL RADIUS:
16'-6" FR 61 & 62
16'-5 13/16" FR 74
16'-5 9/16" FR 75
PCS 1, 2, & 5 THRU 10
TO PC 21 (TYP)
PCS 5 THRU 12 & 18
TO PCS 1 & 2 (TYP)
PCS 10, 11, 12 & 18
TO PCS 1 & 2
SEE DETAIL 21-A
81.6# PL
51.0# PL
71.4# PL
PC 1 & 2
TO PC 13
SEE DET 18-A
EXTENT OF
PC 11 & 12
& 18 MT
EXTENT
OF PC 10
MT
CL
JACKING
POINT
TYP PCS 14, 15, 16, 17 & 19
TO PCS 1, 2, 9, 10, 11, 12 & 18
PC 18
TO PC 13
SNIPE
UPPER
CORNERS
FOR
BEVEL
WELD
1" (TYP)
15'-0"
(REF)
17'-3 1/2"
22'-10 1/2"
L=79 3/8"
(SHOWN)
(SIMILAR)
ALT
MT
BL
CL
SIZE
FSCM NO.
WT GRP
NAVSEA DRAWING NO.
REV
C
53711
100
7281526
A
SCALE: AS SHOWN
BSCI
SHEET 5

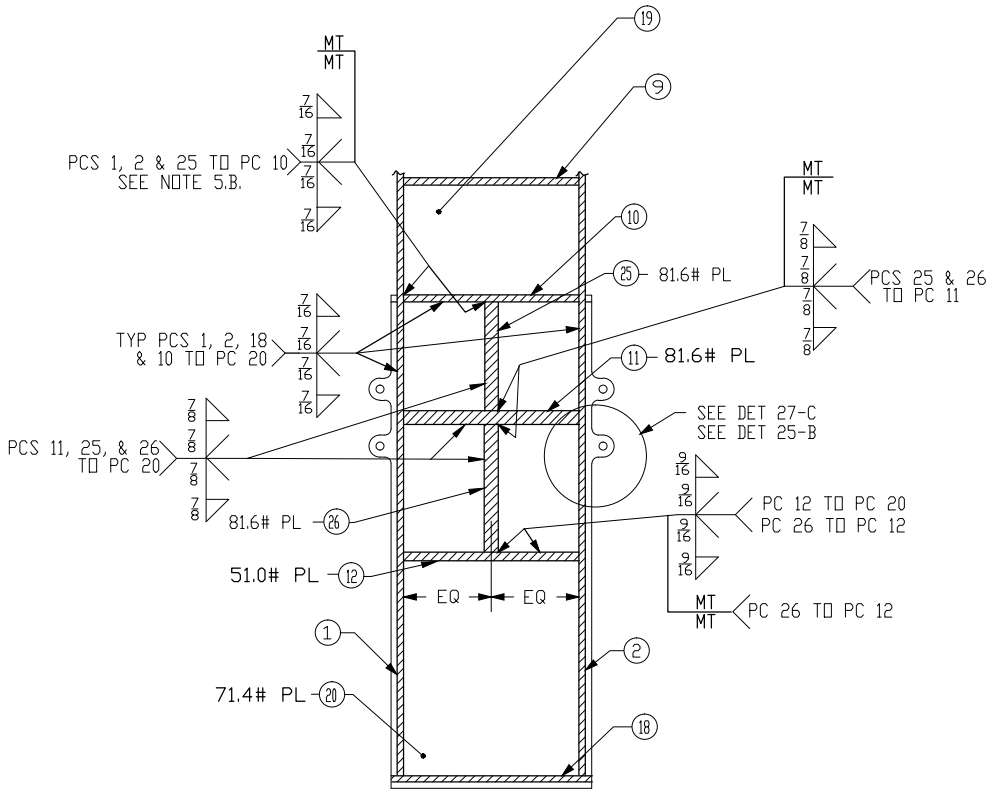

A SECTION 23-A (17-B)

SUPPORT FIXTURE
ALL MATERIAL IS 40.8 # PL
UNLESS OTHERWISE NOTED
SCALE: NONE

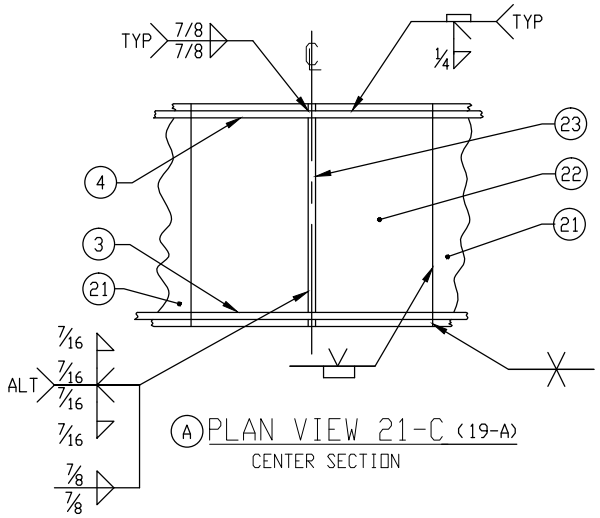

A PLAN VIEW 21-C (19-A)

CENTER SECTION

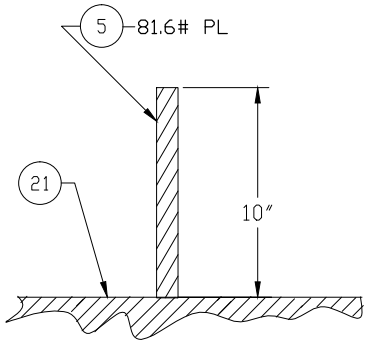

A DETAIL 21-A (19-A)

SCALE: 3" = 1'-0

SIZE	FSCM NO.	WT GRP	NAVSEA DRAWING NO.	REV
C	53711	100	7281526	A
SCALE: AS SHOWN		BSCI	SHEET 6	

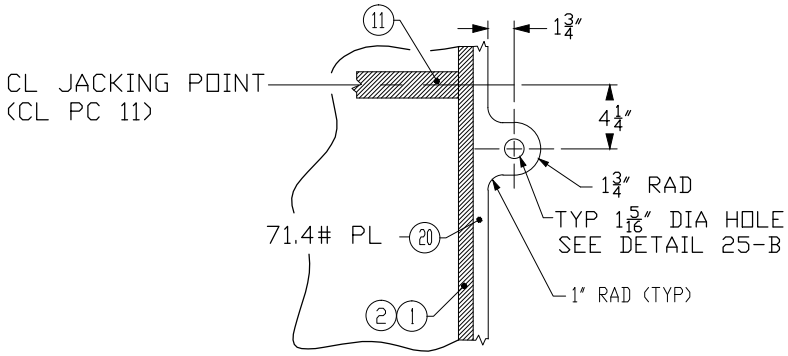

DETAIL 27-C (23-A)

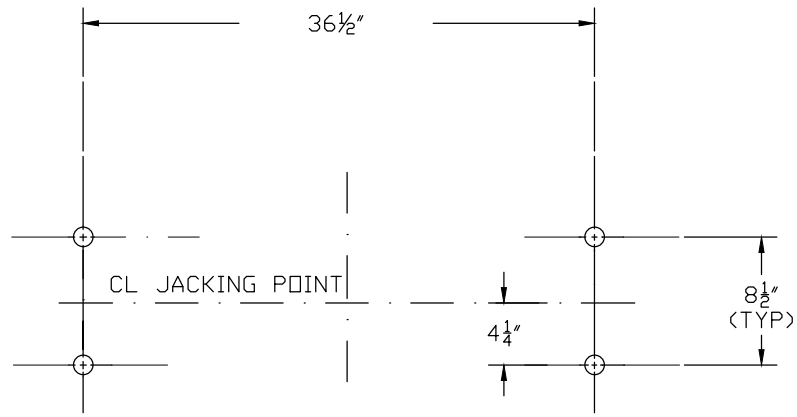

DETAIL 25-B (23-A, 27-C)
DRILLING PATTERN

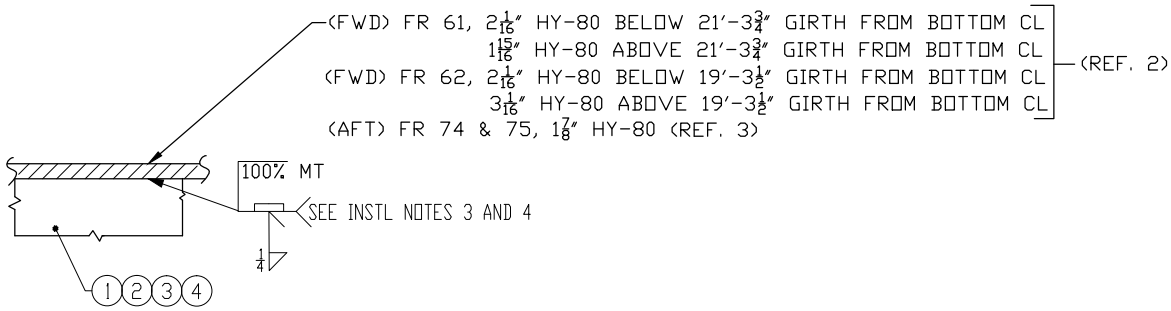

DETAIL 28-A
TYPICAL SIDEPLATE HULL ATTACHMENT

SIZE	FSCM NO.	WT GRP	NAVSEA DRAWING NO.	REV
C	53711	100	7281526	-
SCALE: NONE		BSCI	SHEET 7	

GROUP "C" TEMPORARY SUPPORT STANDS
Material List

PC	QTY PORT	QTY TRENCH	DESCRIPTION	MATERIAL SPEC	PROVIDED BY	UNIT WEIGHT (LBS)
1	4	0	Group C Assembled Temporary Support Stand	MIL-S-22698, GR-DH-36 CL-U	PSNS	12,543
2	0	1	Group C Tall Temporary Support Stand with 44” X 55” X 11” Shim Pack	MIL-S-22698, GR-DH-36 CL-U	PSNS	19,682
3	0	1	Group C Tall Temporary Support Stand with 44” X 45” X 11” Shim Pack	MIL-S-22698, GR-DH-36 CL-U	PSNS	18,311
4	0	1	Group C Short Temporary Support Stand with 44” X 45” X 5” Steel Shim Pack	MIL-S-22698, GR-DH-36 CL-U	PSNS	6,449
5	0	1	Group C Short Temporary Support Stand with 44” X 55” X 5” Steel Shim Pack	MIL-S-22698, GR-DH-36 CL-U	PSNS	7,072
6	4	0	44” X 55” X 9” Steel Shim	ASTM A-514	PSNS	6,187
7	0	2	44” X 45” X 5” Steel Shim	MIL-S-22698, GR-DH-36 CL-U	PSNS	2,818
8	0	2	44” X 55” X 5” Steel Shim	MIL-S-22698, GR-DH-36 CL-U	PSNS	3,441
9	4	8	½” Plywood	CDX or Equal	Contractor	AS REQ'D
10	4	2	¼” Plywood	CDX or Equal	Contractor	AS REQ'D

Port of Benton
Temporary Stand Location

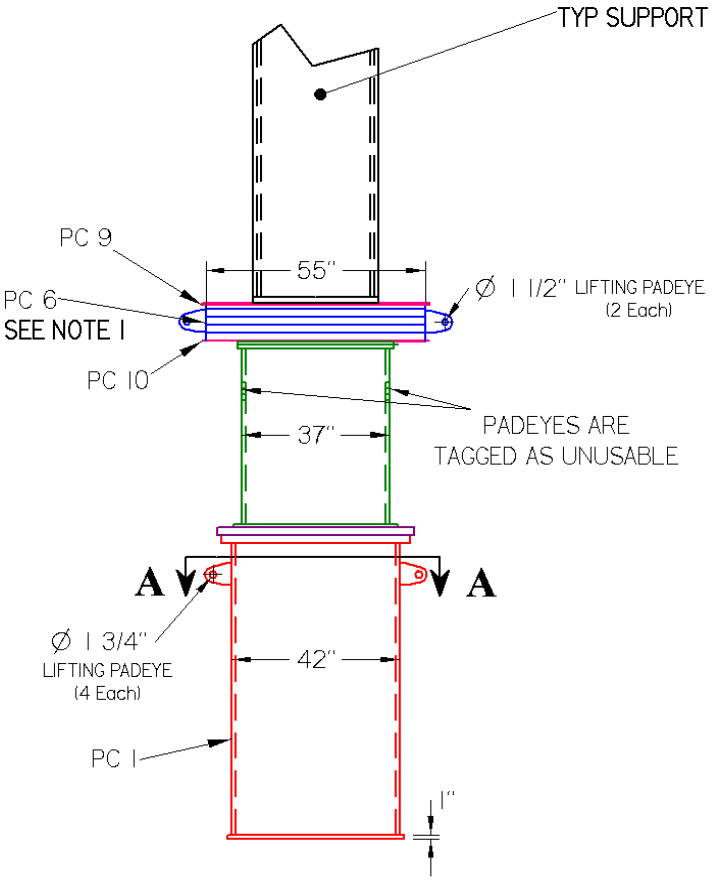

FIGURE 1

TEMPORARY STAND
LOOKING INBOARD

(NOT TO SCALE)

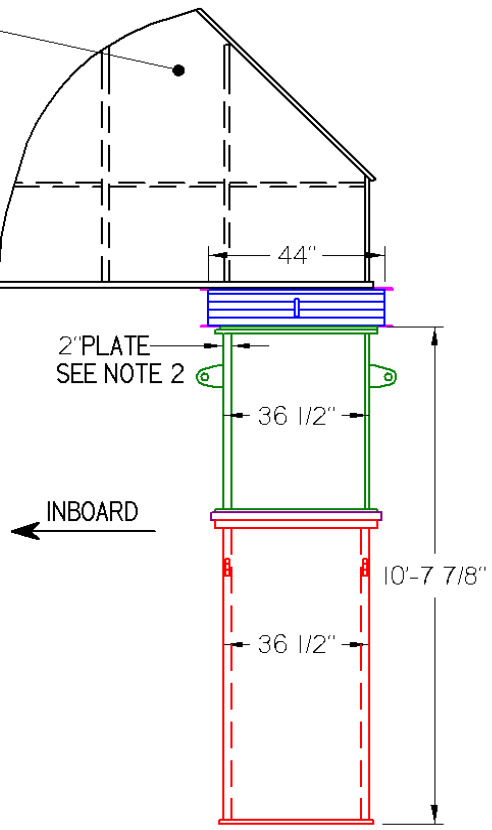

FIGURE 2

TEMPORARY STAND
LOOKING FWD

(NOT TO SCALE)

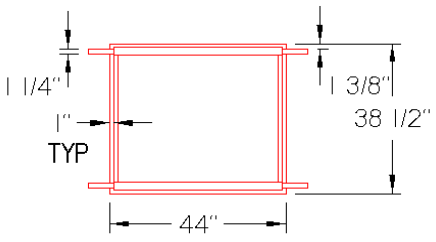

SECTION "A-A"

NOTES:

1. SHIM HEIGHT MAY BE ADJUSTED ON TOP THE TEMPORARY SUPPORT STANDS TO SUIT THE TRANSPORTER CONFIGURATION. HOWEVER, A MINIMUM HEIGHT IS REQUIRED TO CLEAR THE TEMPORARY SUPPORT STANDS IN TRENCH 94.

2. THE 2" THICK VERTICAL PLATE OF THE UPPER TEMPORARY SUPPORT STAND SHALL FACE INBOARD.

3. ALIGN TEMPORARY SUPPORT STANDS AND STEEL SHIMS PER SHEET 5.

Trench 94
East Temporary Stands

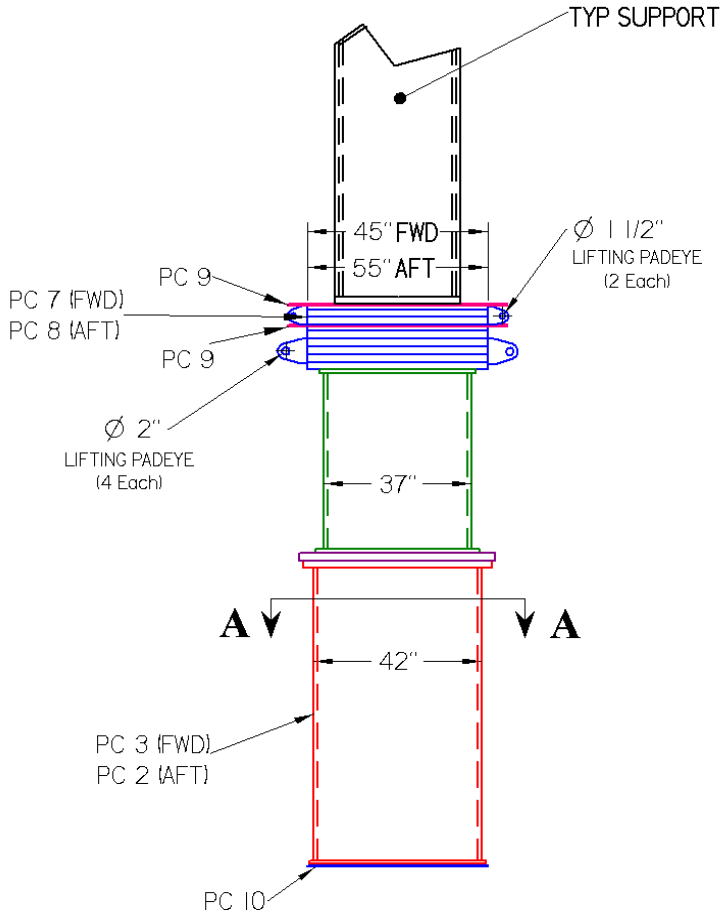

FIGURE 3

TEMPORARY STAND
LOOKING WEST

(NOT TO SCALE)

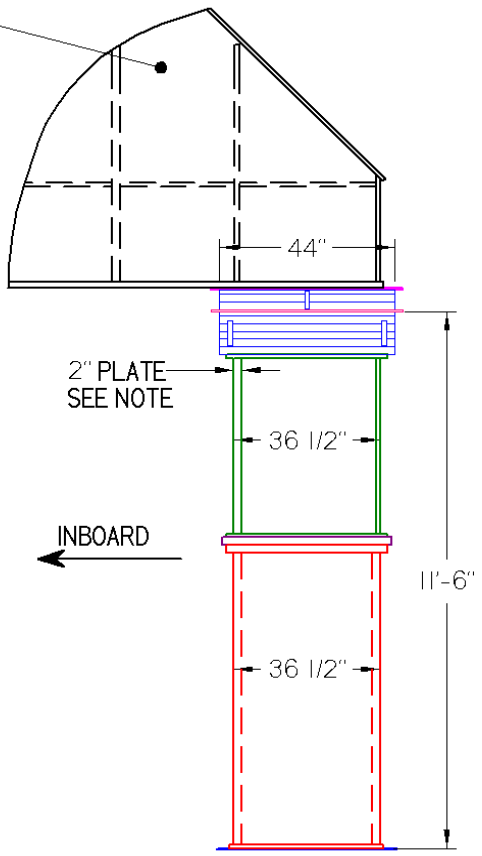

FIGURE 4

TEMPORARY STAND
LOOKING NORTH

(NOT TO SCALE)

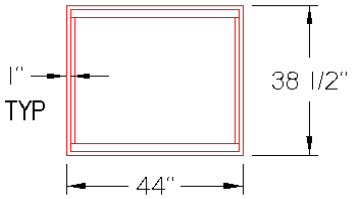

SECTION "A-A"

NOTE: THE 2" THICK VERTICAL PLATE OF THE UPPER TEMPORARY SUPPORT STAND SHALL FACE INBOARD.

Trench 94
West Temporary Stands

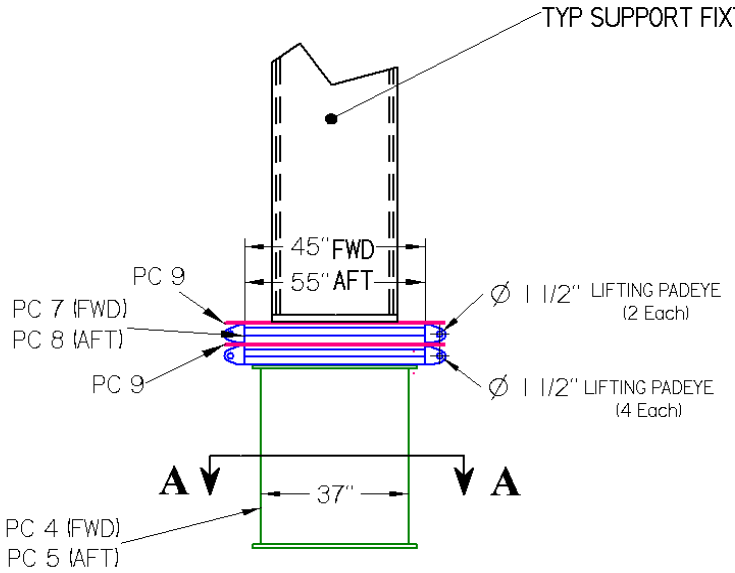

FIGURE 5

TEMPORARY STAND
LOOKING EAST

(NOT TO SCALE)

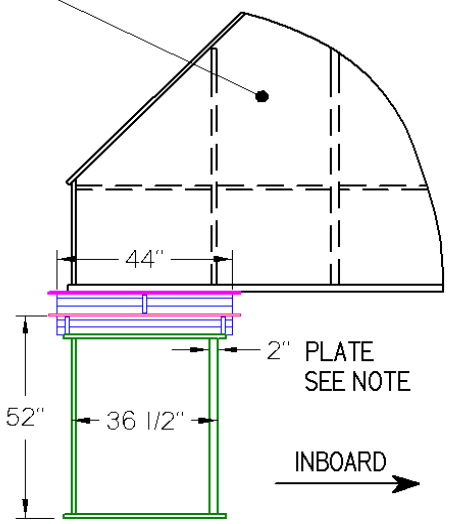

FIGURE 6

TEMPORARY STAND
LOOKING NORTH

(NOT TO SCALE)

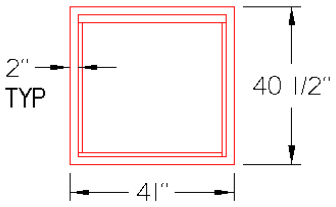

SECTION "A-A"

NOTE: THE 2" THICK VERTICAL PLATE OF THE TEMPORARY SUPPORT STAND SHALL FACE INBOARD.

Port of Benton
Temporary Stand Alignment

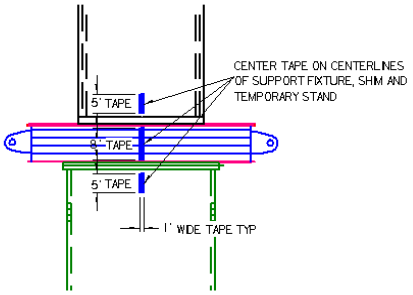

FIGURE 7

TEMPORARY STAND
LOOKING INBOARD

(NOT TO SCALE)

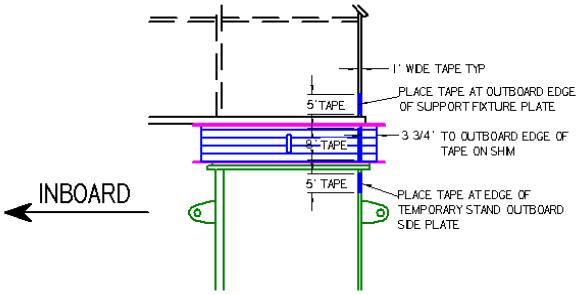

FIGURE 8

TEMPORARY STAND
LOOKING FWD

(NOT TO SCALE)

NOTES:

1. PLACE VERTICAL TAPE AT THE FORE, AFT, AND OUTBOARD SIDES OF THE TEMPORARY SUPPORT STANDS, SHIMS, AND SUPPORT FIXTURES AS SHOWN ABOVE. PAINT MAY BE USED INSTEAD OF TAPE IF DESIRED.

2. THE TEMPORARY SUPPORT STANDS AND SHIMS ARE CORRECTLY ALIGNED WHEN A VERTICAL LINE PASSES THROUGH THE THREE TAPE (OR PAINT) LINES ON THE FORE, AFT, AND OUTBOARD SIDES OF THE TEMPORARY SUPPORT STANDS, SHIMS, AND SUPPORT FIXTURES.

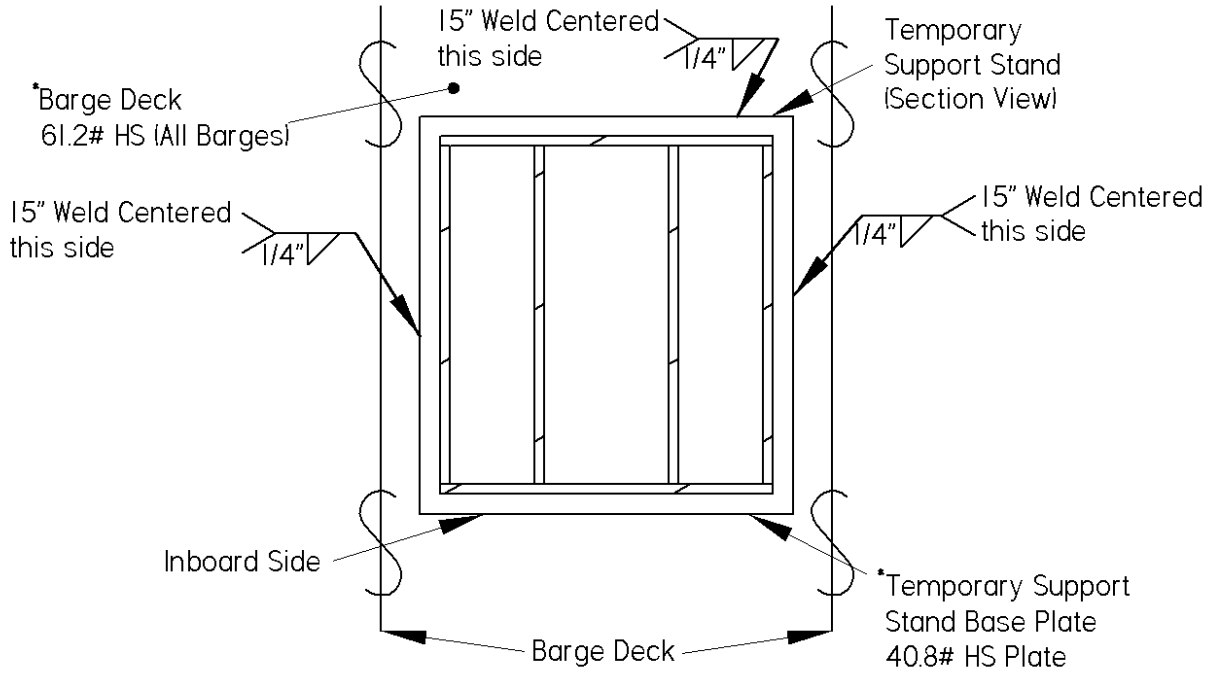

Weld Note: Where the gap between the temporary support stand base plates and the barge deck plates is greater than 1/16" as a normal condition, increase fillet weld size by the amount of separation.

*All material is MIL-S-22698, Grade A, DH-36, HS

Temporary Support Stand Attachment Weld to Barge Deck

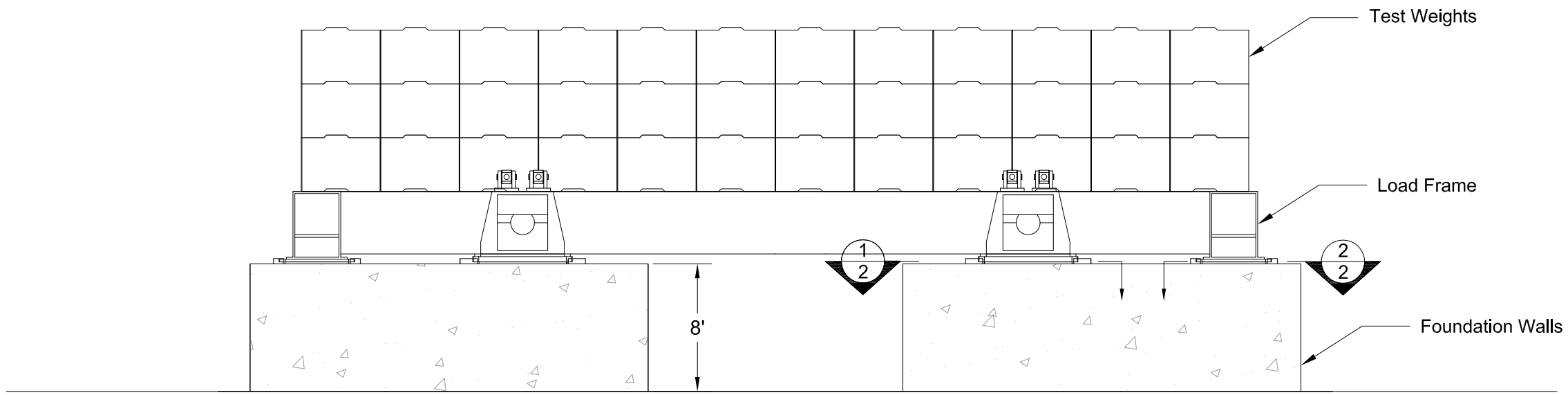

1/1 Load Frame on Foundation Walls - Side View

Total Weight of Frame and Weights Shown: 2100 Short Tons

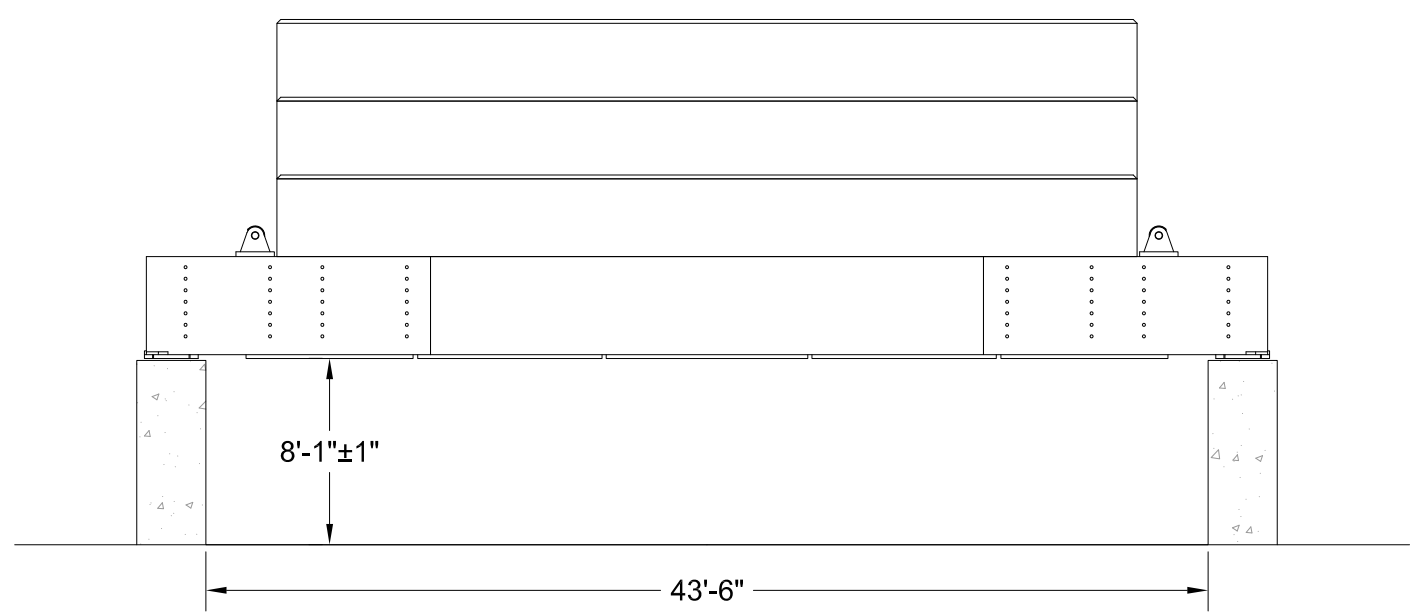

2/1 Load Frame on Foundation Walls - Front View

PUGET SOUND NAVAL SHIPYARD
& INTERMEDIATE MAINTENANCE FACILITY

Transporter Load Test Frame and Test Weights

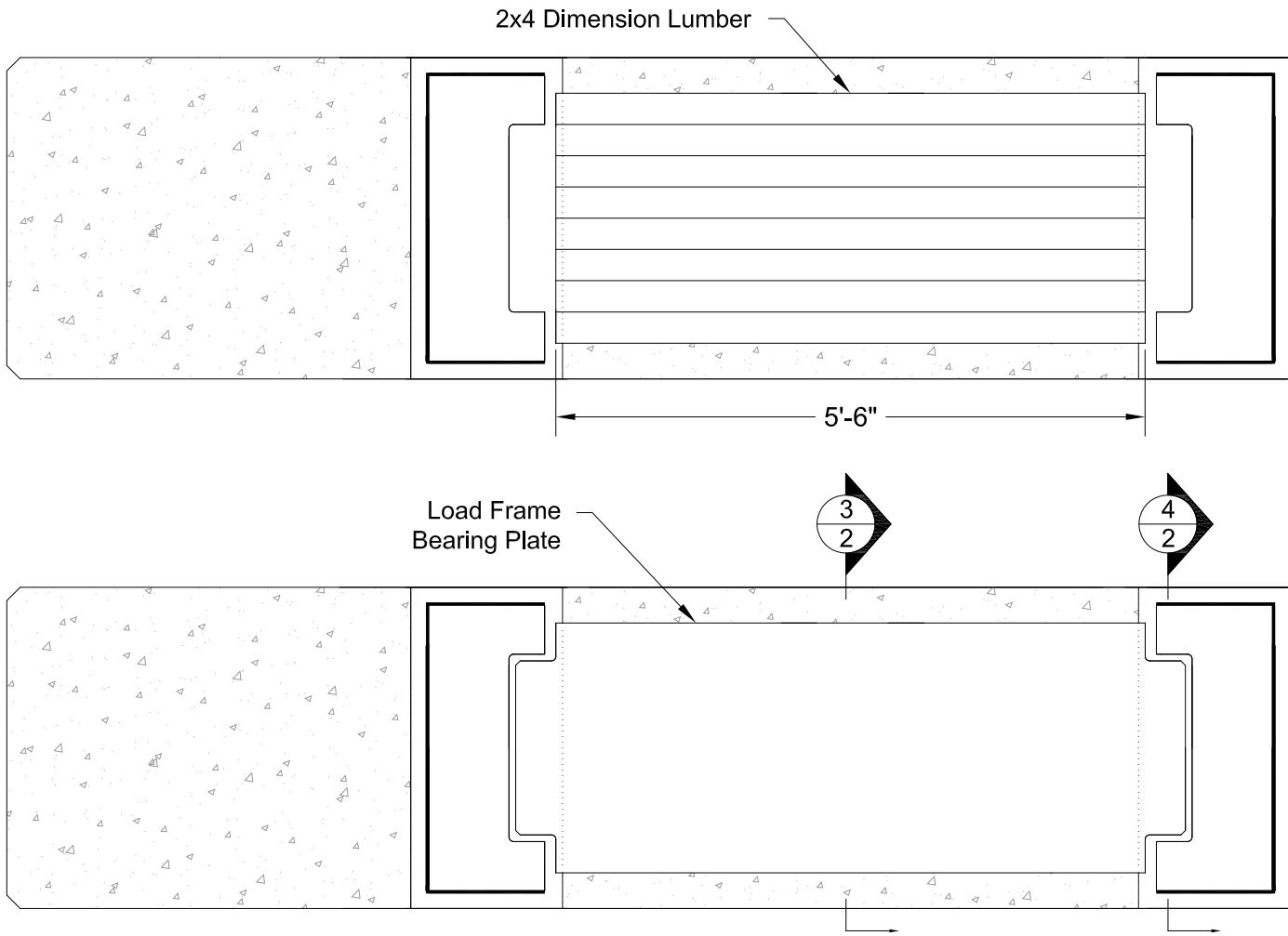

1/2 Typical Transverse Load Beam Bearing Detail

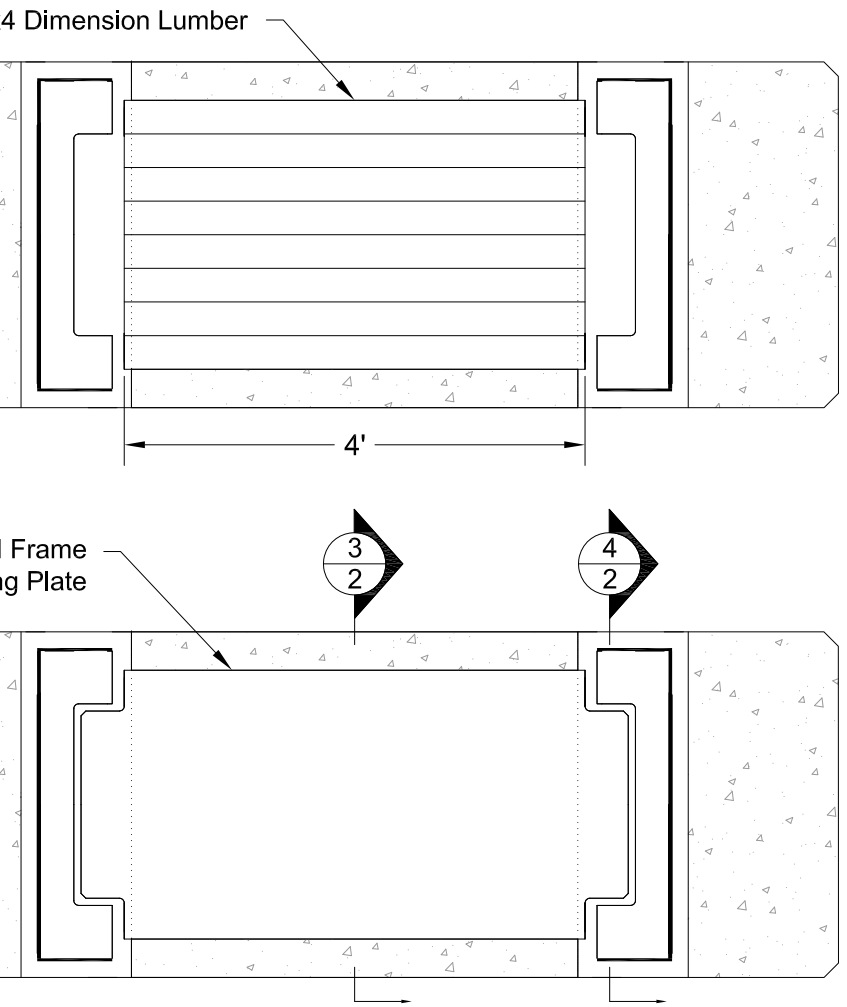

2/2 Typical Transverse End Beam Bearing Detail

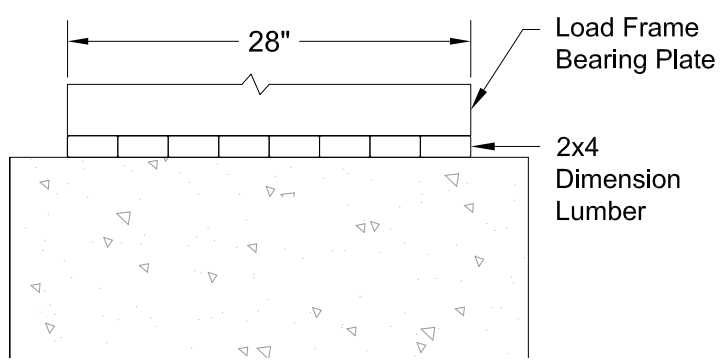

3/2 Typical Wall Bearing Section

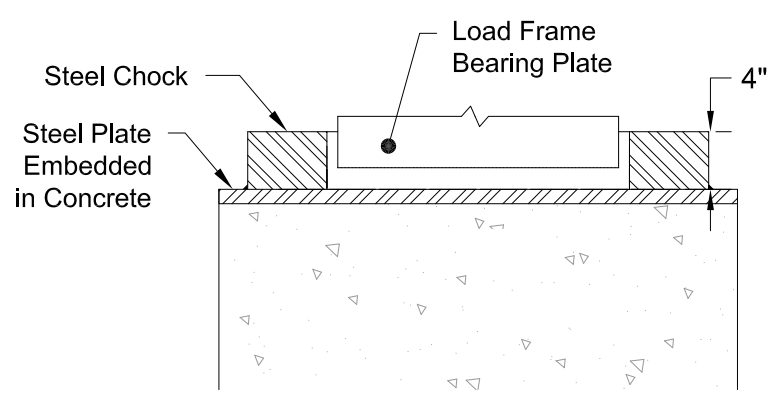

4/2 Typical Section Near Chocks

NOTES

1. Materials: Dimension Lumber: 2x4 Douglas Fir-Larch (initial dimensions: 1-½" thick, 3-½" wide). Cut to the lengths shown in the drawing above.

2. Placing Wood Bearing Material: Place the 2x4 dimension lumber so that it will support the load frame bearing plates without gaps between boards. Center the dimension lumber with the centerline of the Load Frame Bearing Plates. Align the sides of the dimension lumber with the sides of the Load Frame Bearing Plates.

3. Placing Load Frame: Center the load frame bearing plates between the embedded steel plates. Adjust the dimension lumber as necessary to ensure bearing plates will make full contact with the wood.

PUGET SOUND NAVAL SHIPYARD
& INTERMEDIATE MAINTENANCE FACILITY

Transporter Load Test Frame and Test Weights

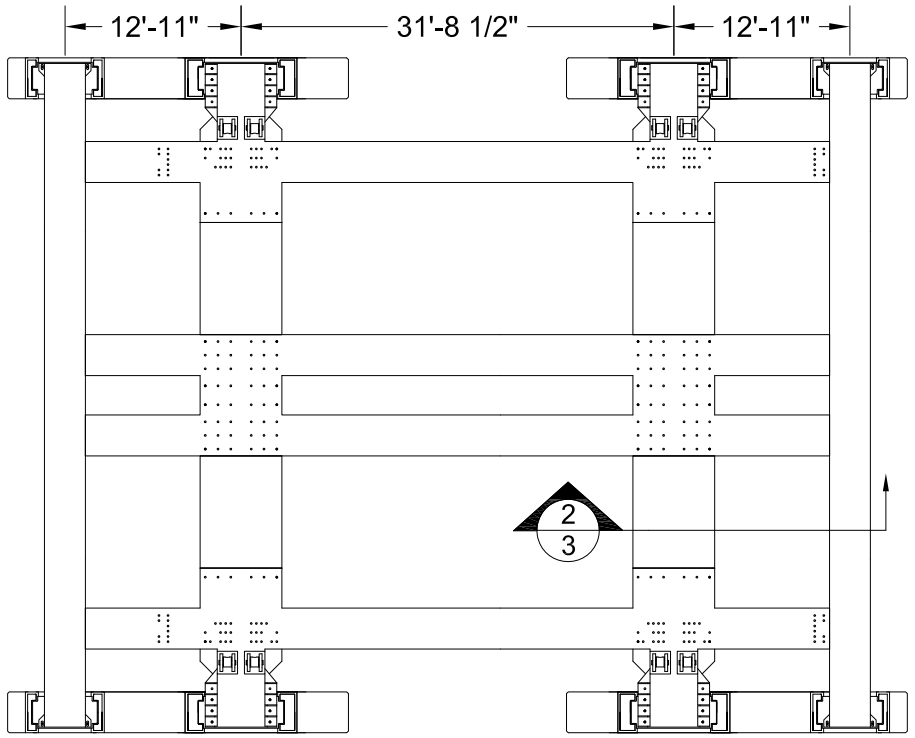

1/3 Load Frame - Plan View

Test Weights not shown

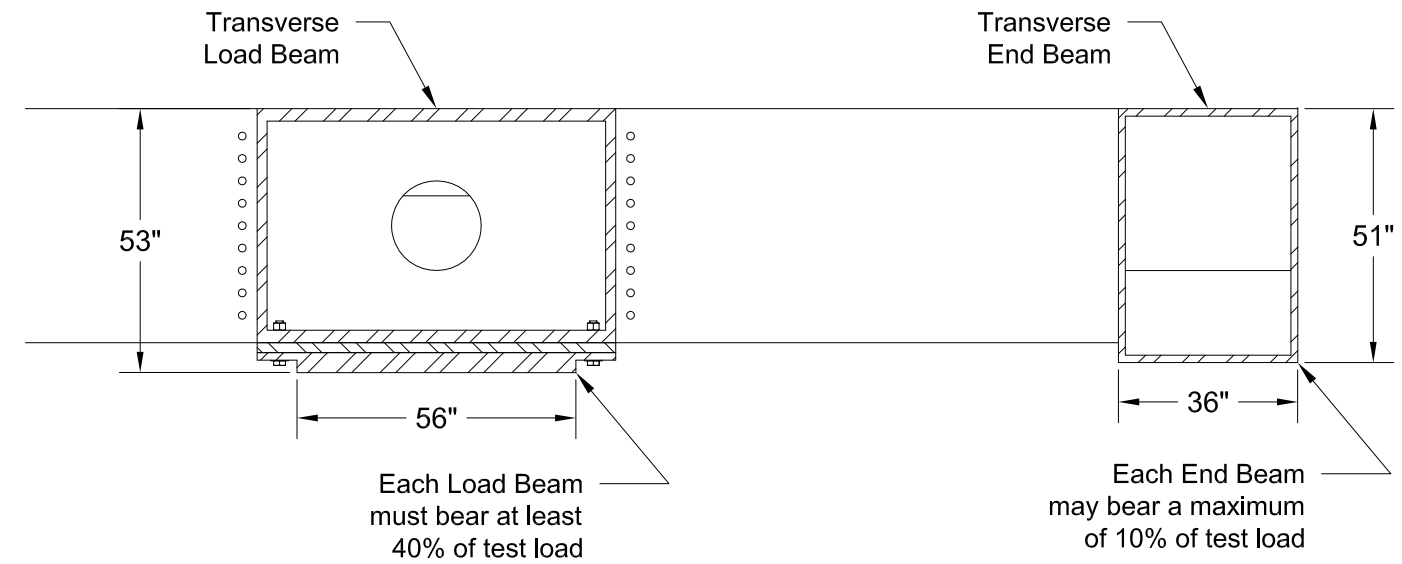

2/3 Load Frame Bearing Beams

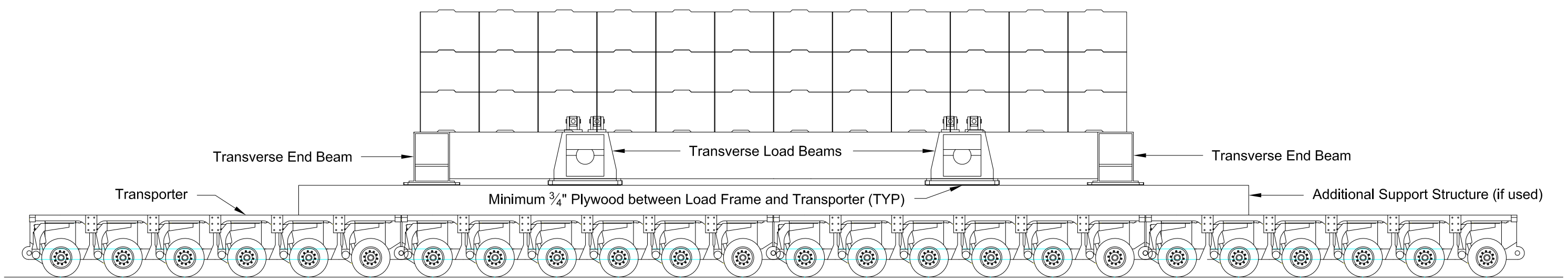

3/3 Load Frame on Transporter

PUGET SOUND NAVAL SHIPYARD
& INTERMEDIATE MAINTENANCE FACILITY

Transporter Load Test Frame and Test Weights

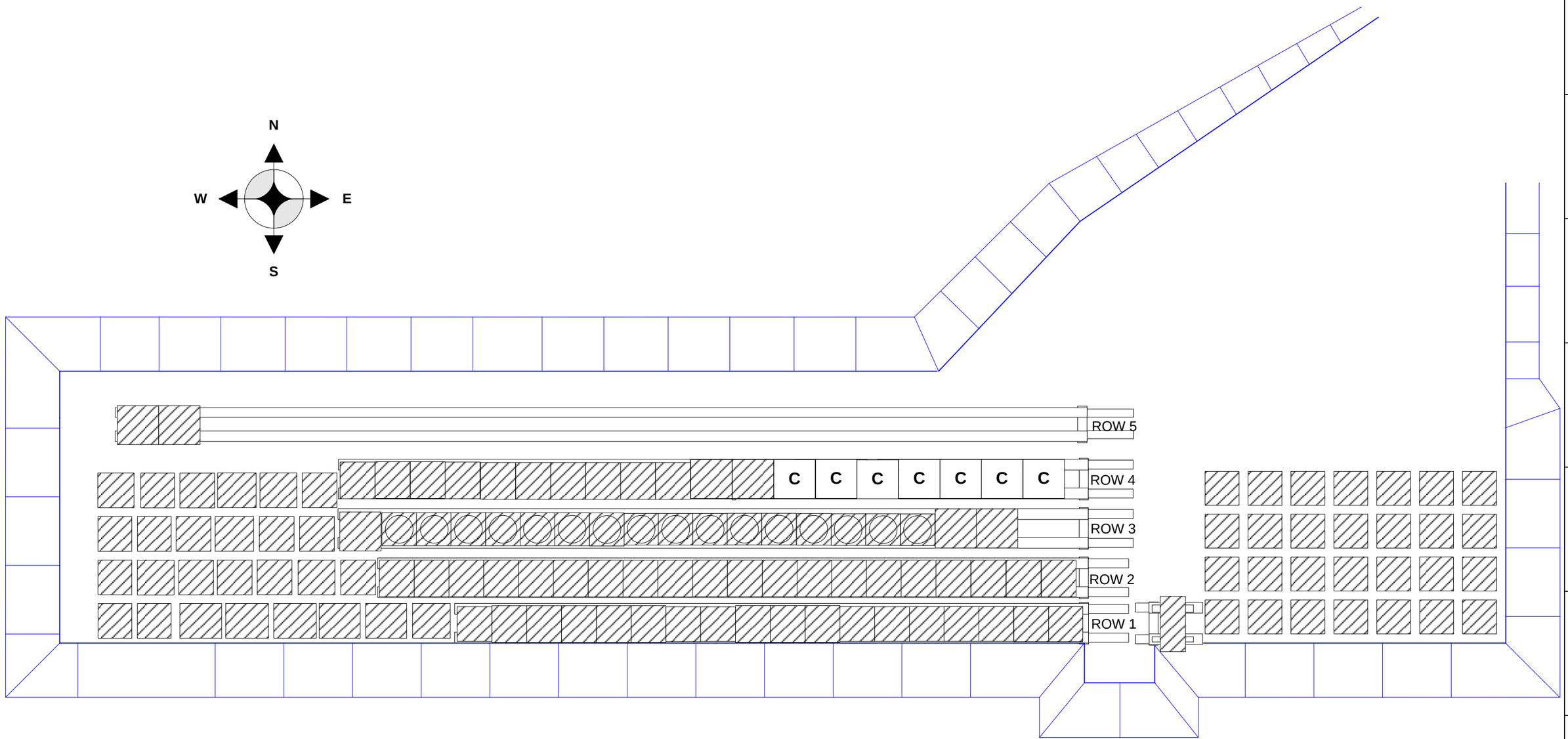

Attachment 2.17
1 of 1

7 Group C → C

EXISTING PACKAGES →

NAVSEA PUGET SOUND PUGET SOUND NAVAL SHIPYARD	TITLE	**Trench 94 Package Placement**	
	DATE 5/21/03	REVISED 12/9/13	
DRAWN BY Code 2312.2	SCALE 1 in. = 110 ft.	PAGE 1 OF 1	

ROW 4
STEEL RAIL LAYOUT

(Looking North)

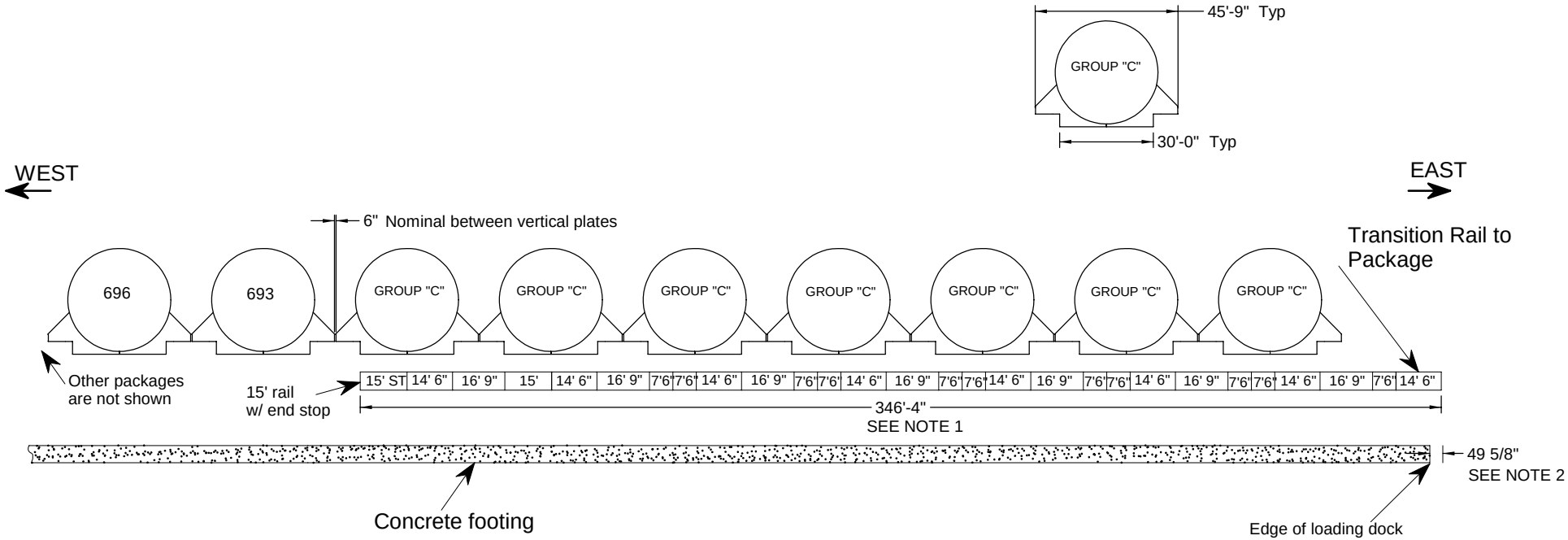

NOTES:

1. **Layout steel rails as shown. Total length assumes a 1/4" gap between rails sections.**

2. **Distance between Edge of the Loading Dock and Edge of Track on the Offload Frame. Distance assumes a 2" gap between top edge of the Offload Frame and the Edge of the Loading Dock.**

GUIDED/UNGUIDED RAILS

Qty Req'd	Size
7	16'-9"
1	15' with end stop
1	15'
8	14'-6"
11	7'-6"

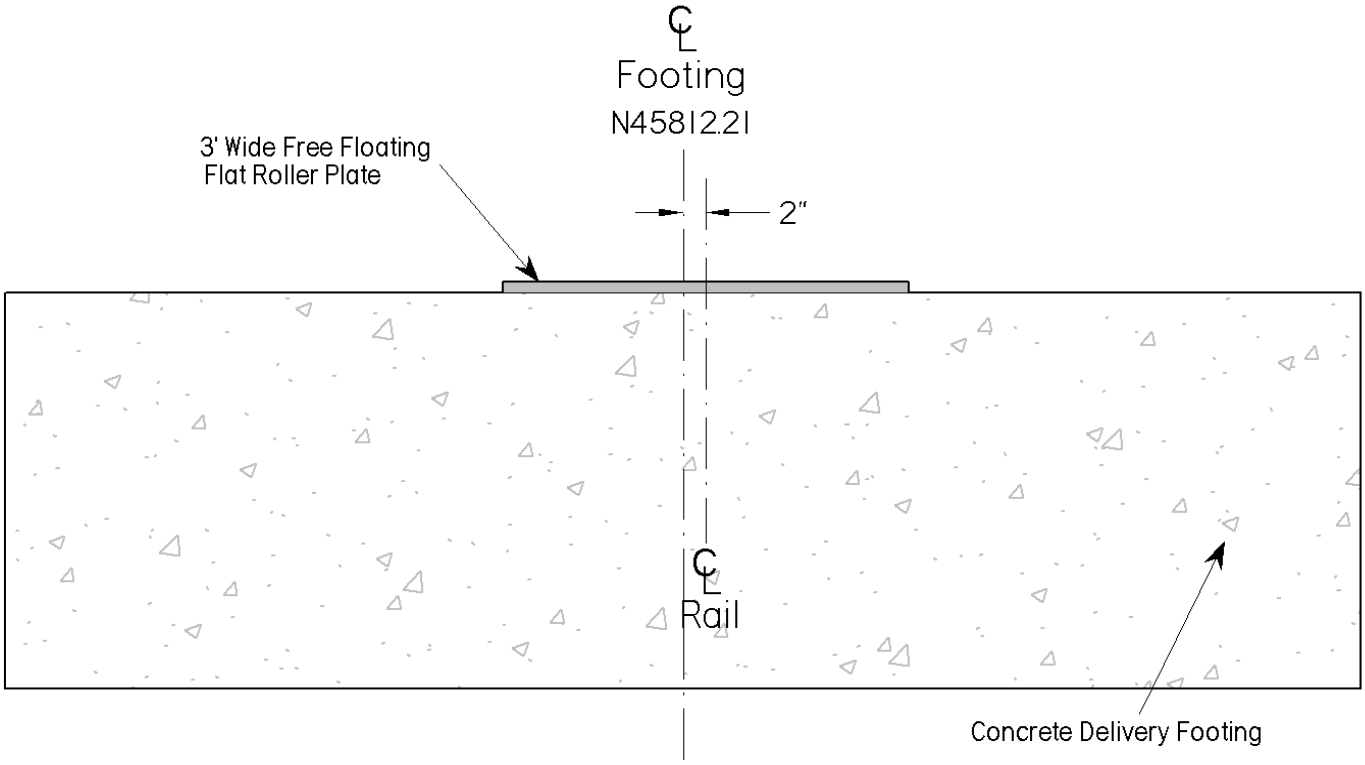

Row #4 South Footing

Looking West

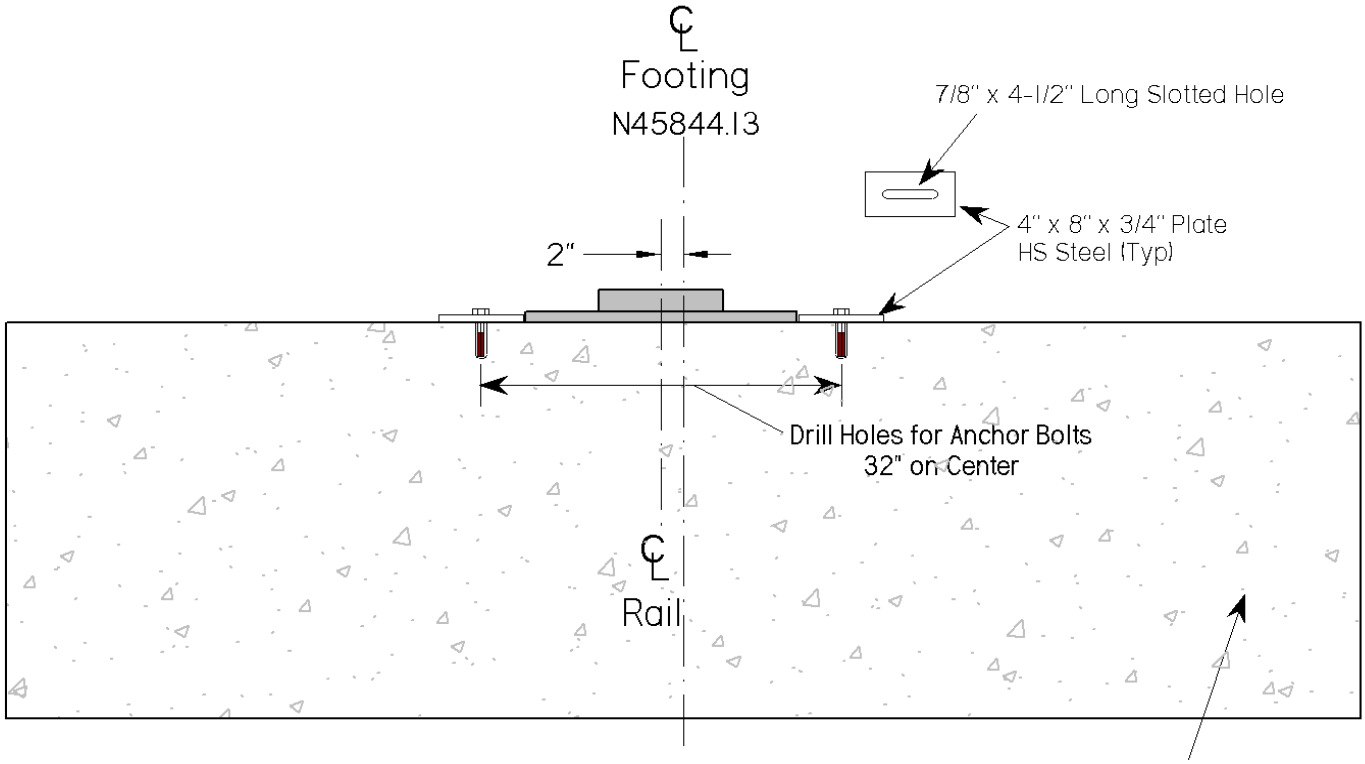

Row #4 North Footing

Looking West

GROUP C PACKAGE ON ROW #4

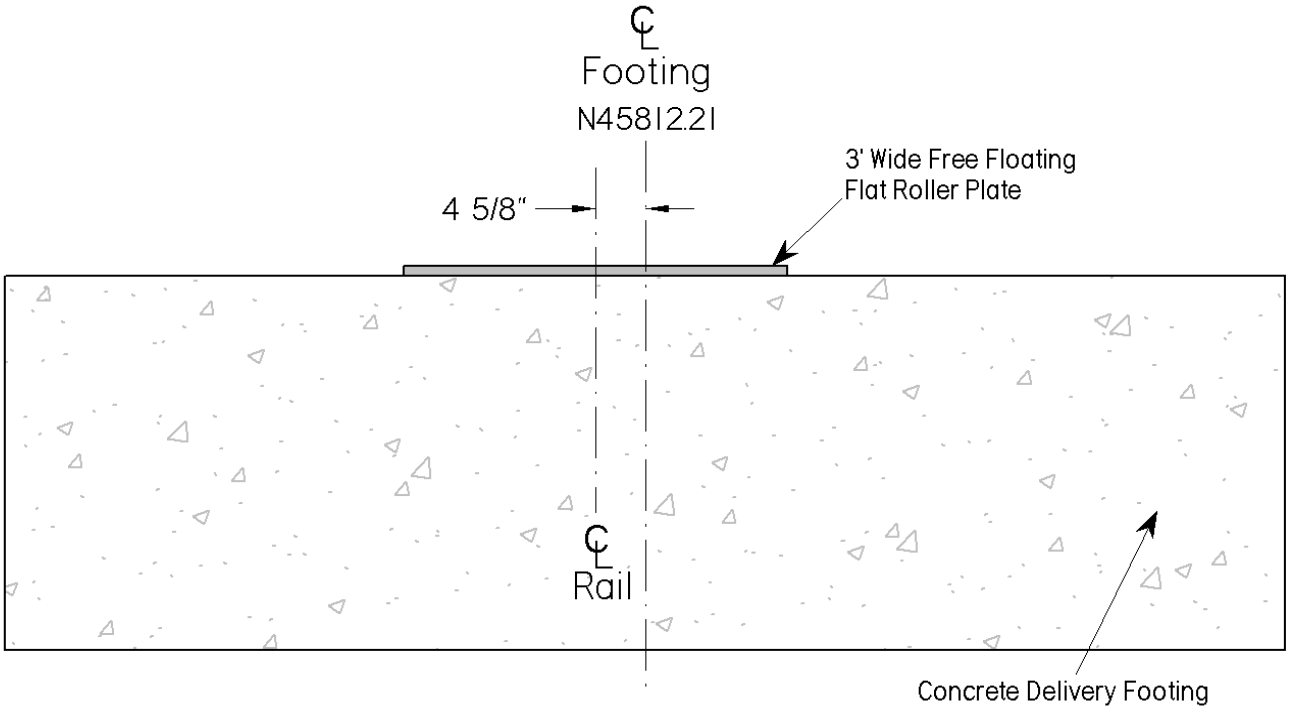

Row #4 South Footing

Looking West

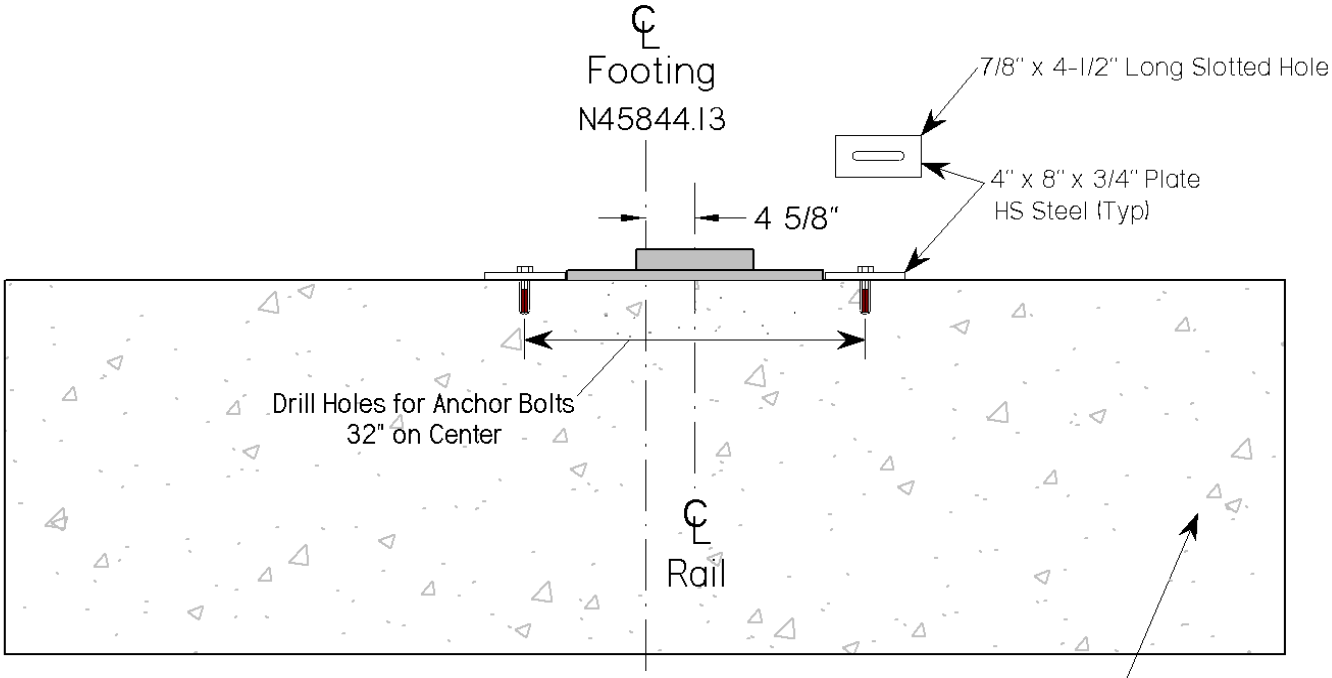

Row #4 North Footing

Looking West

GROUP C (671) PACKAGE ON ROW #4

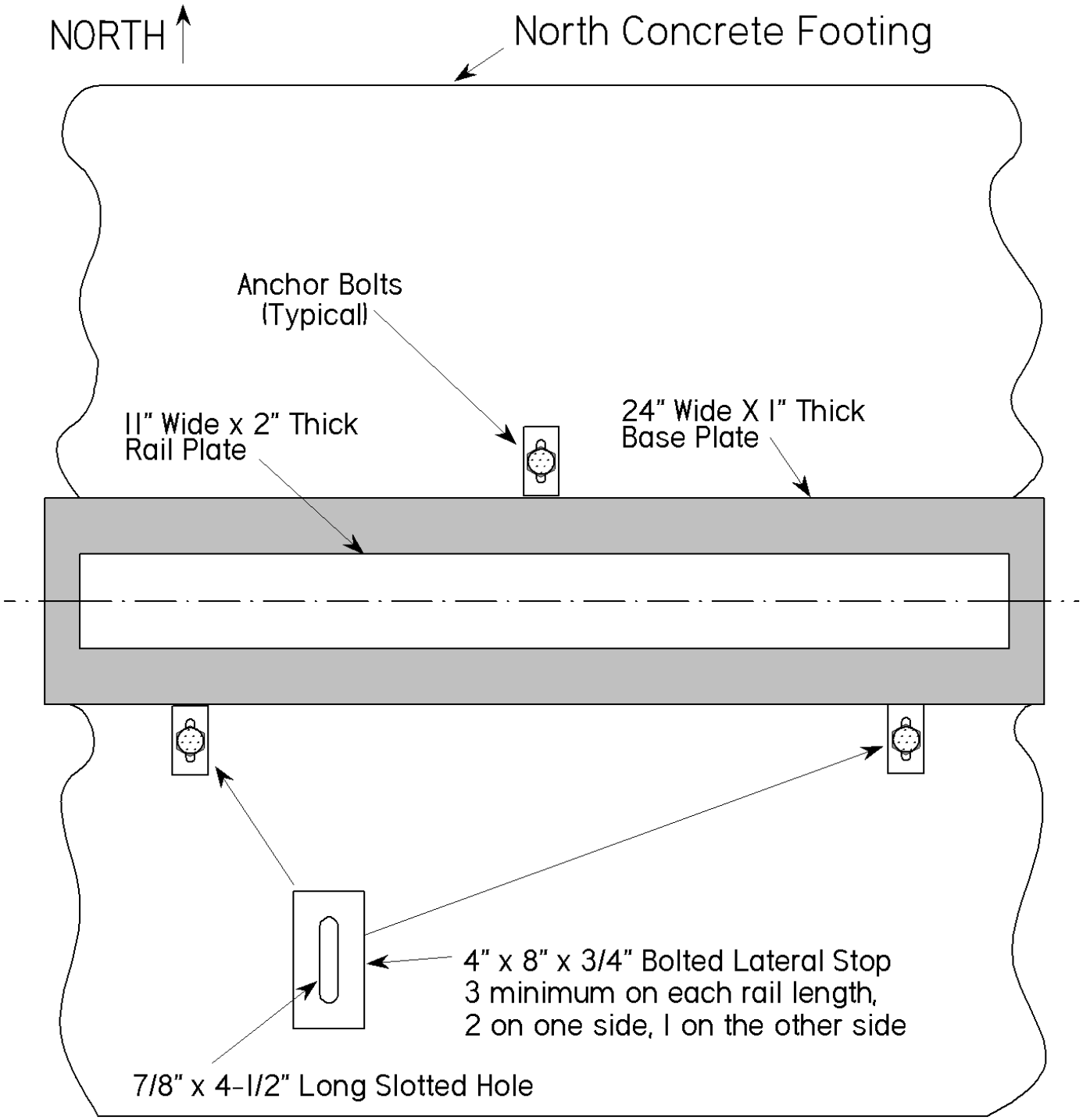

NOTES:

1. Layout rails as indicated on this Attachment. Reuse steel rails from stockpile as required.
2. Existing concrete anchors are Gunnebo anchors. New anchors shall be 3/4"x3" min. depth Gunnebo concrete anchors.
3. All anchor bolts shall have flat washers.
4. Rail alignment between sections shall be within 1/16" of flush.
5. See sheets 2 and 3 for rail alignment on the concrete footing.

RAIL DETAILS
(Plan View)

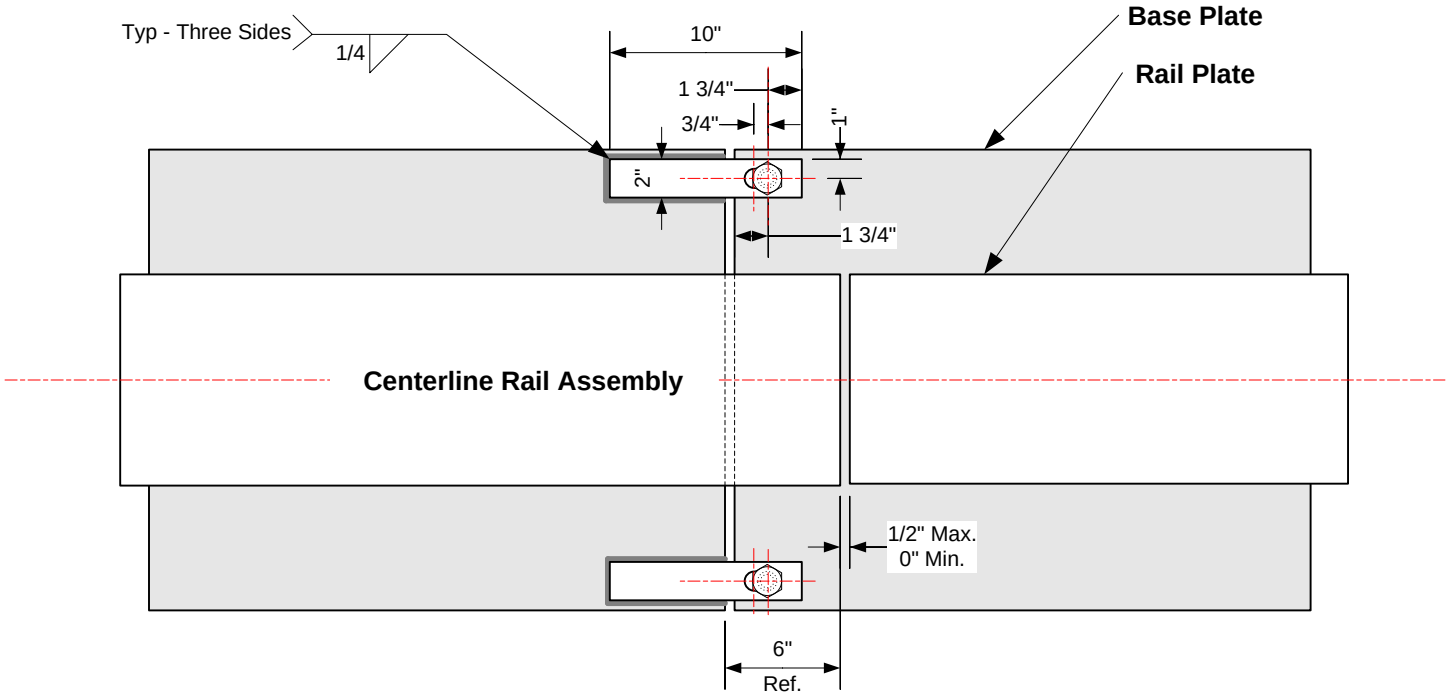

Rail Attachment Bracket
Plan View

Scale 1" = 10"

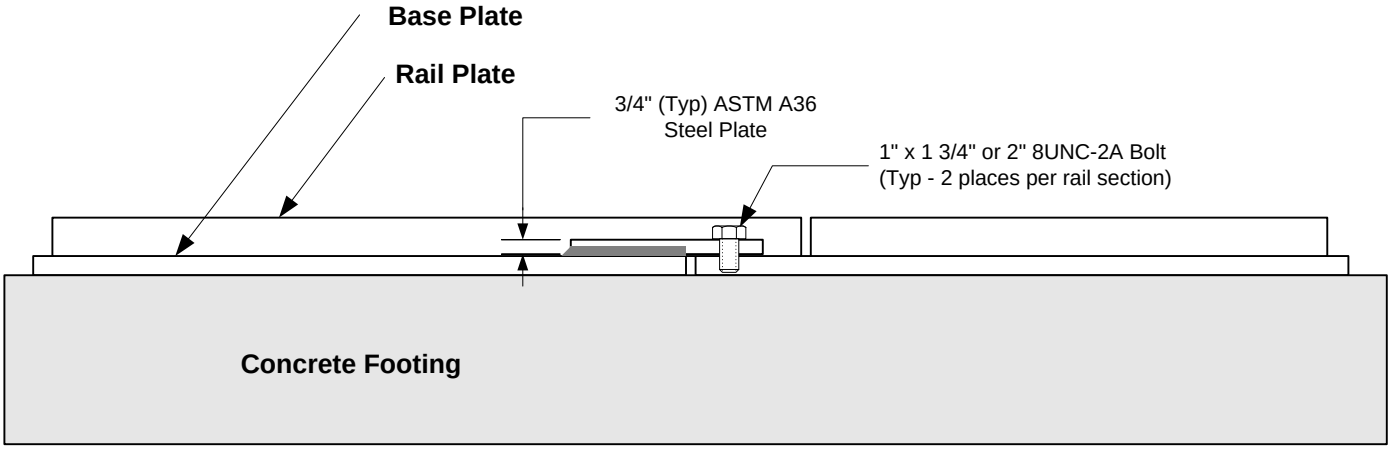

Rail Attachment Bracket
Elevation View

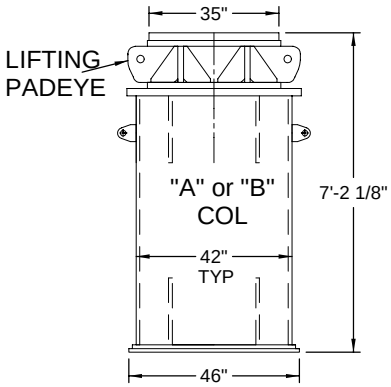

SECTION A-A

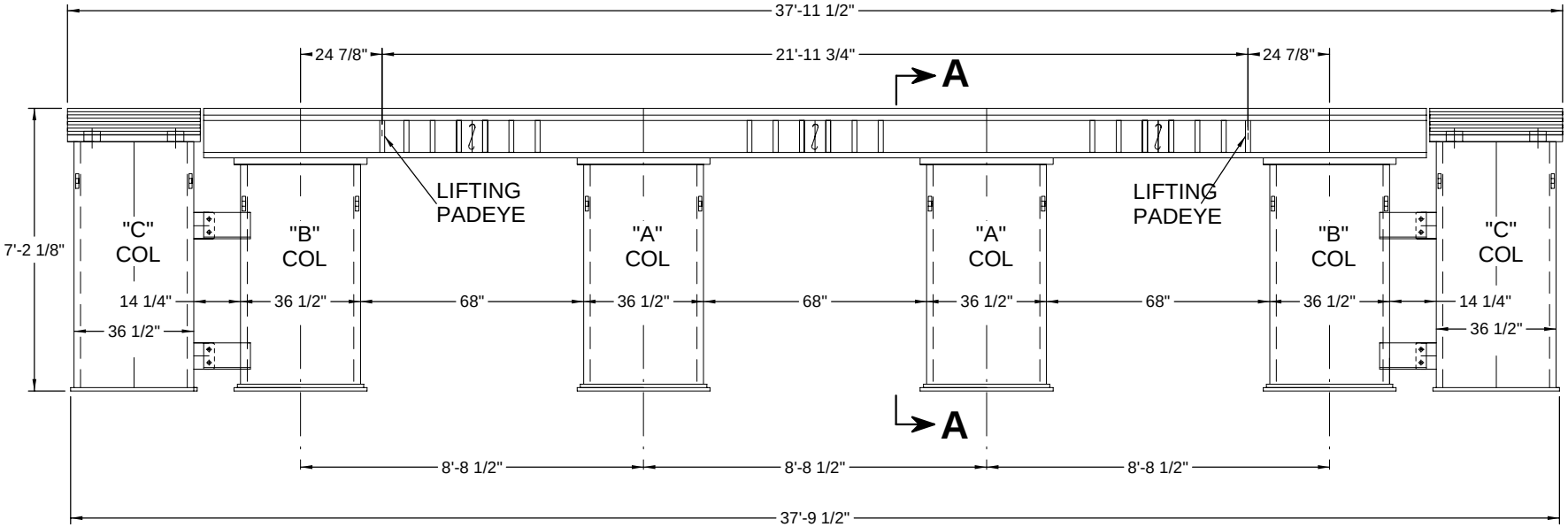

FRAME WEIGHT APPROX. 81,445 lbs.

OFFLOAD FRAME

OFF-LOAD OPERATIONS

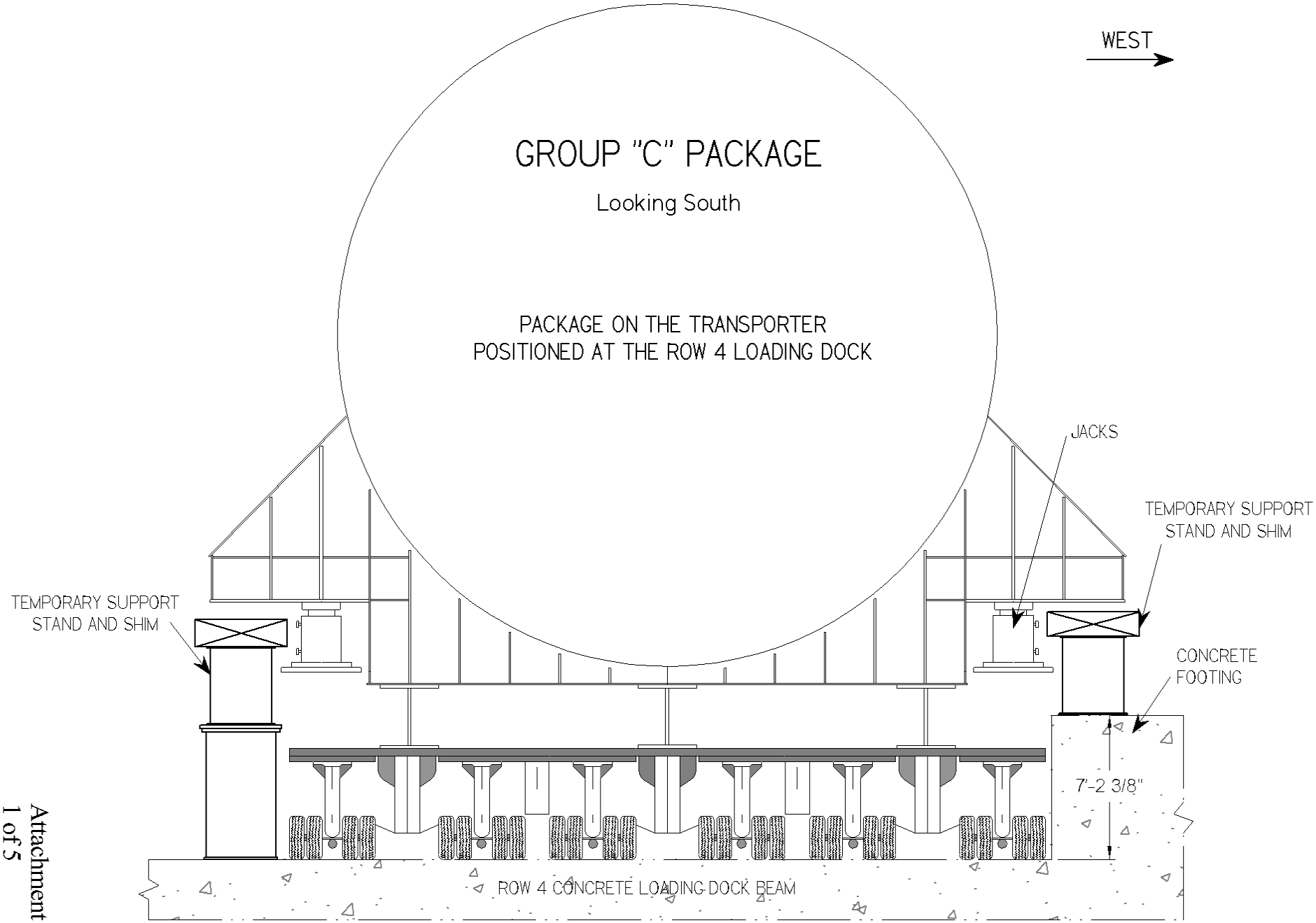

OFF-LOAD OPERATIONS

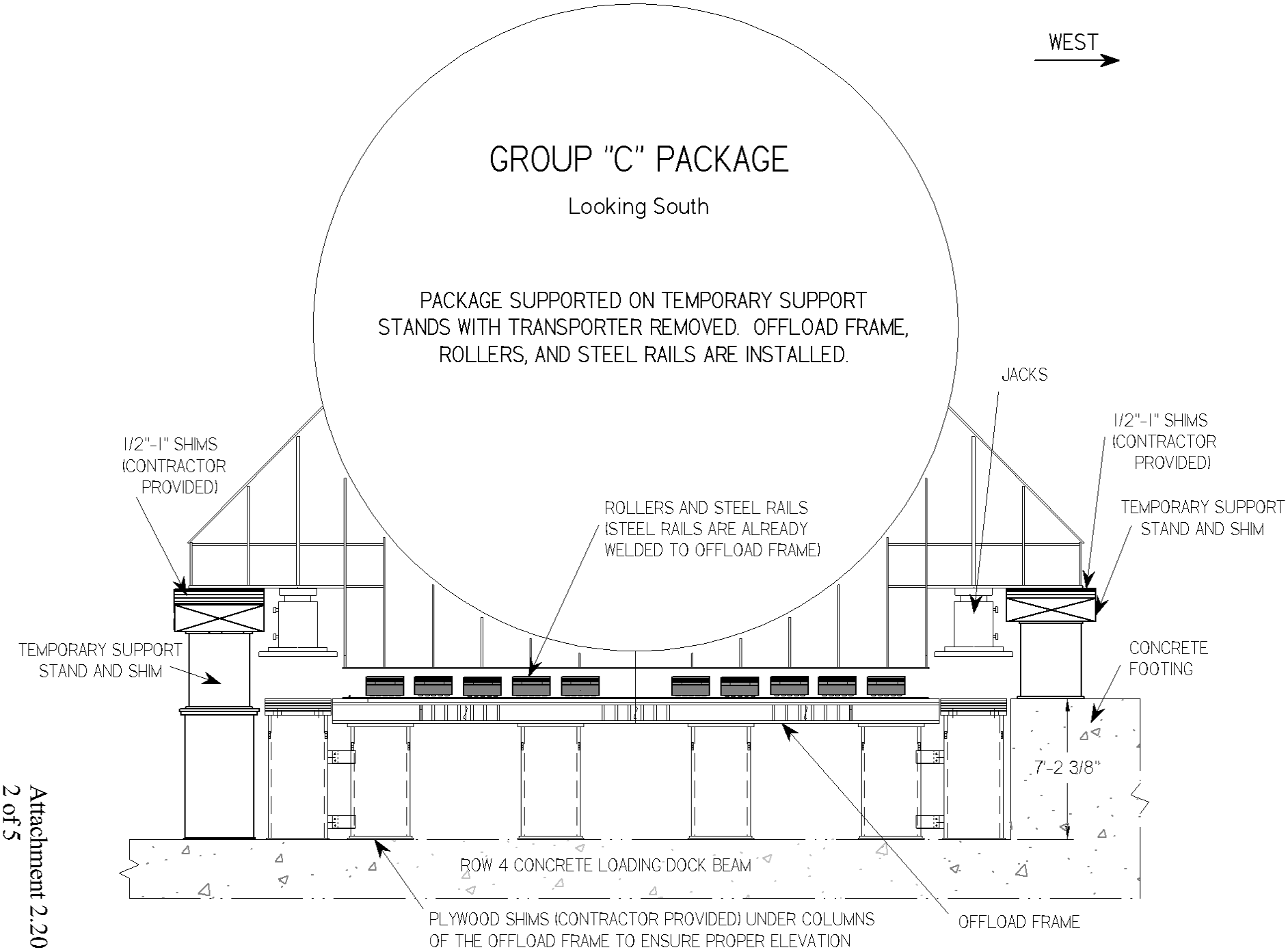

OFF-LOAD OPERATIONS

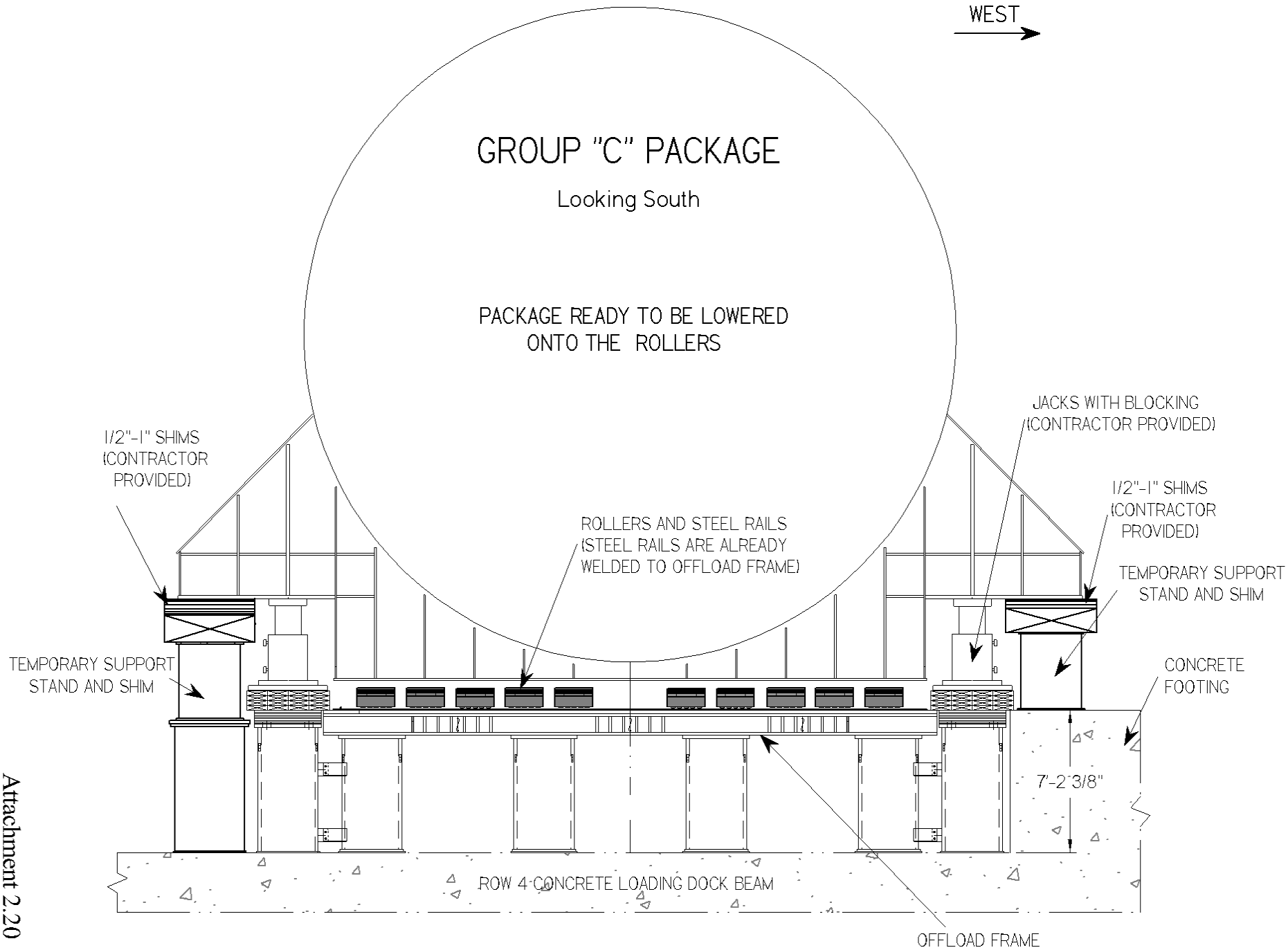

OFF-LOAD OPERATIONS

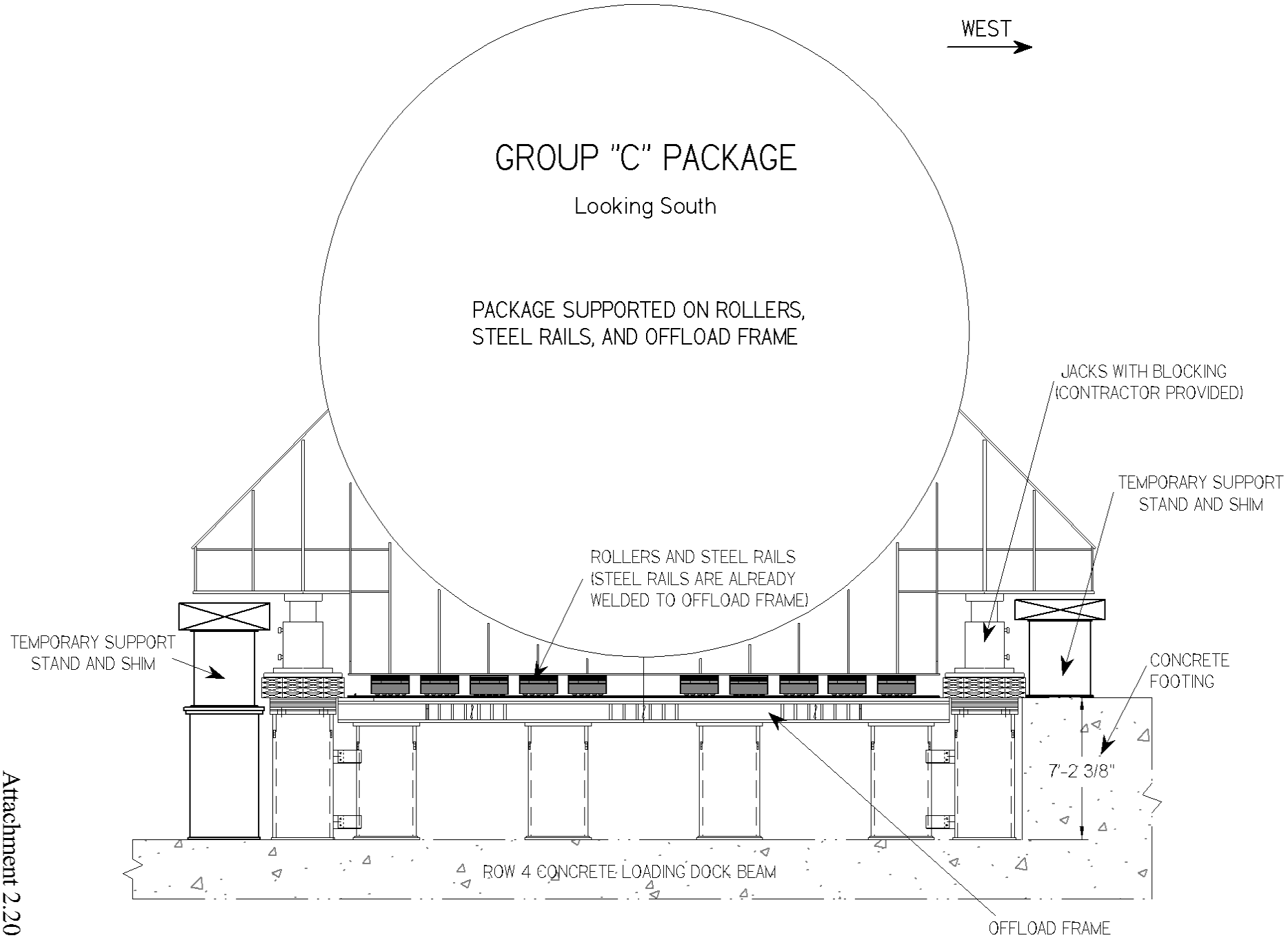

OFF-LOAD OPERATIONS

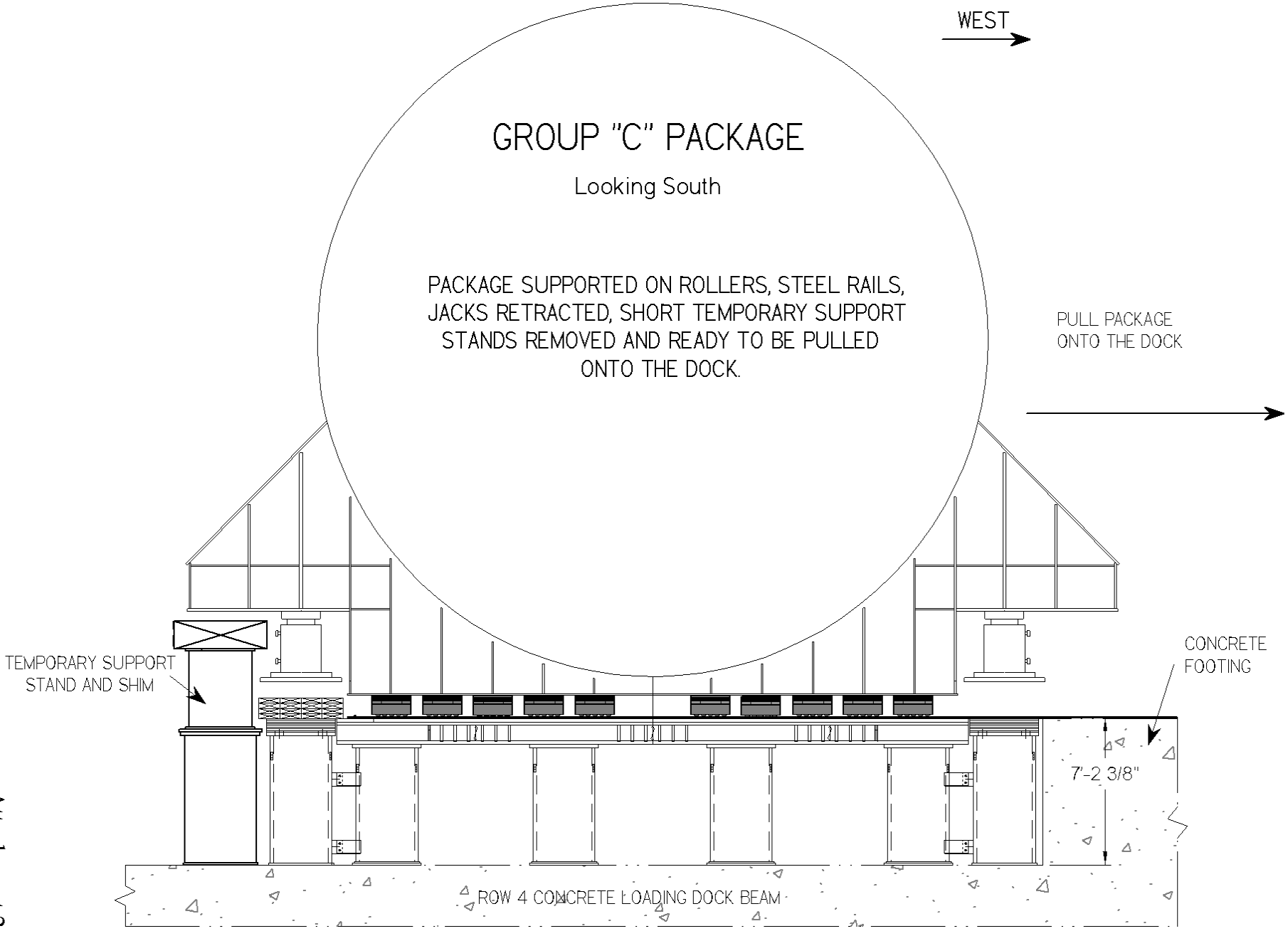

ROLLER ALIGNMENT PROCEDURE

1. PURPOSE/SCOPE:

1.1 This procedure provides the instructions necessary to align the Unguided Roller Assemblies to support Group “C” Reactor Compartment Disposal package movement at Trench 94.

1.2 This procedure will be used in conjunction with the appropriate Land-Haul work procedures.

1.3 Roller alignment plates will be installed on the appropriate offload rail for Group “C” packages. The roller assemblies will be placed on the steel rails and secured by hook bolts. The alignment plates will align all the unguided roller assembly cylinders inside the body of the roller.

2. PROCEDURE:

2.1 TYPICAL ROLLER ALIGNMENT (REFER TO FIGURES 1 AND 2)

2.1.1 Install alignment plate “B” 3 11/16” parallel from the centerline of the steel rail and secure on the rail.

2.1.2 Install the roller assemblies on the steel rail per the PSNS provided roller plan and the applicable Land-Haul work procedure.

2.1.3 Move the roller assemblies to ensure that all the roller cylinders are seated on the steel rail and that the rollers are not riding on top of alignment plate “B”.

2.1.4 Move the roller assemblies against alignment plate “B” so the end of each roller cylinder is contacting alignment plate “B”.

2.1.5 Place alignment plate “A” on the steel rail and push alignment plate “A” against the roller cylinders so the rollers are contacting alignment plate “A”. Note: Due to some variation on cylinder width, alignment plate “A” may not contact all roller cylinders. In this case, position alignment plate “A” parallel to alignment plate “B” then secure alignment plate “A”.

2.1.6 Ensure the roller assemblies move freely within the alignment plates. Also, ensure the rollers are seated on the steel rail and are not riding on top the alignment plates.

2.1.7 Install the eyebolts on the roller assembly top plates. Secure the roller assemblies to the steel rail using the hook bolts/washers/nuts. Ensure the hooks are facing outboard as shown in Figure 2. Tighten the hook bolts as necessary to minimize lateral movement of the roller assemblies.

2.1.8 Repeat the above steps for the other steel rail.

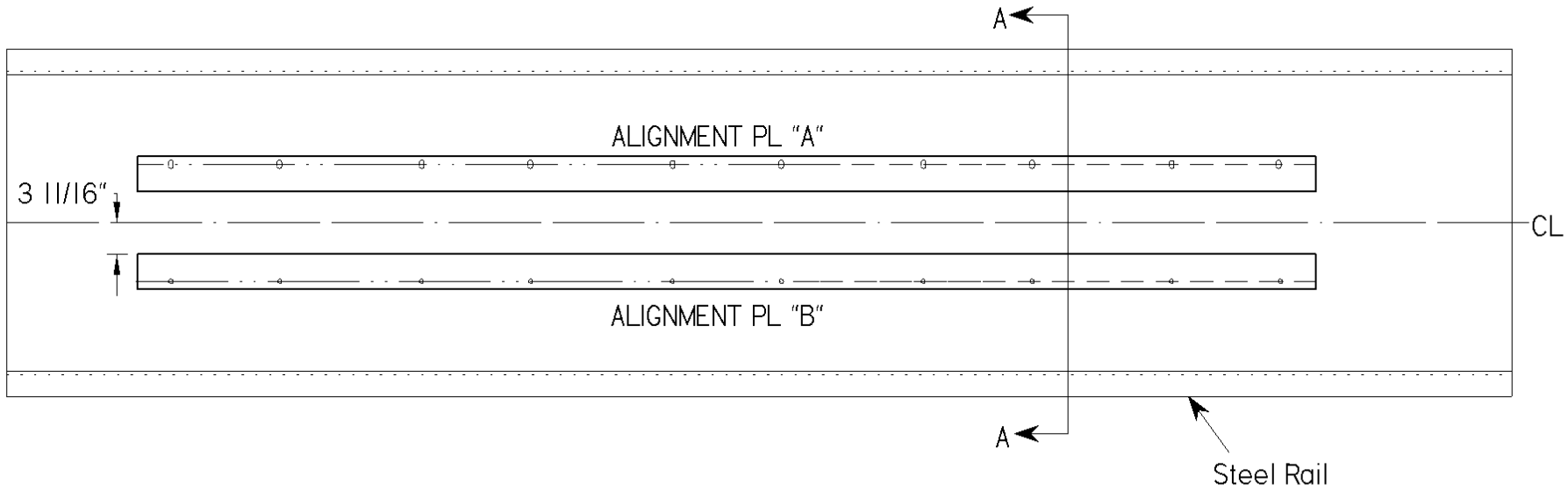

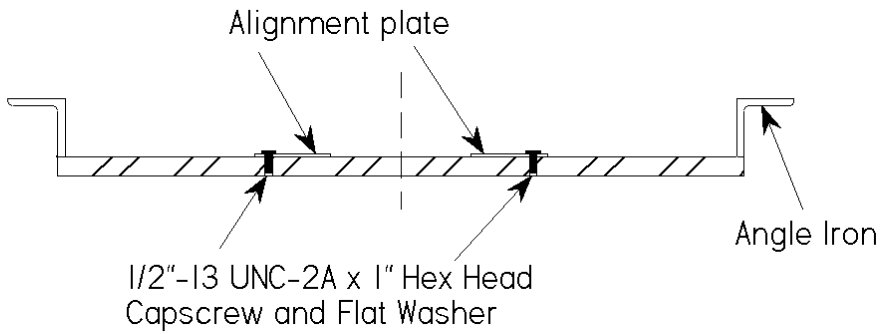

Section A-A

Notes:

1. The applicable steel rails have been modified for installing the alignment plates. Not all components of the steel rails are shown on this drawing.
2. Alignment plate "B" shall be positioned 3 11/16" from centerline.
3. 1/2" capscrews not shown for clarity.

FIGURE 1
TYPICAL ROLLER ALIGNMENT PLATES ON STEEL RAILS

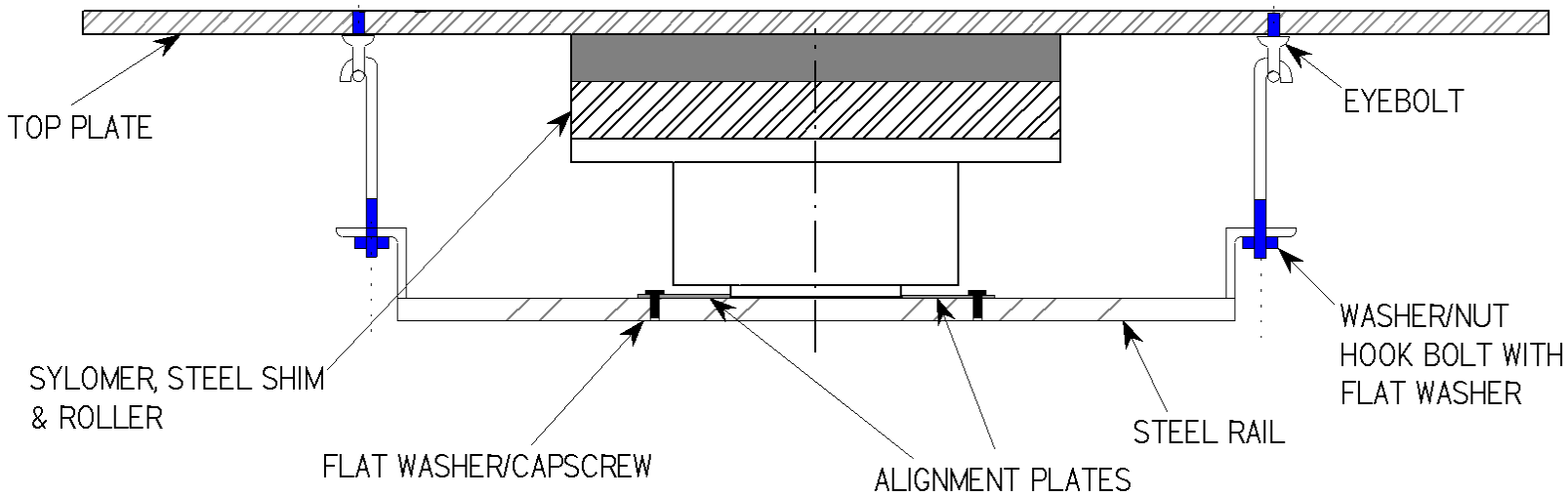

MATERIAL (PSNS & IMF PROVIDED)	GROUP "C" QTY
ALIGNMENT PL "A" (10 GAGE SHEET METAL - STAINLESS STEEL) - 4 ¼" X 141"	2
ALIGNMENT PL "B" (10 GAGE SHEET METAL - STAINLESS STEEL) - 4 ¼" X 141"	2
½"-13UNC-2A X 1" HEX HEAD CAPSCREWS	40
FLAT WASHERS – ½" ID X 1 1/16" OD (MIN.) X 1/8" THICK	60
½"-13UNC-2A X 1" SHOULDER EYEBOLTS	20
½"-13UNC-2A X 7 1/2" HOOK BOLTS	20
½"-13UNC-2B NUTS	20

FIGURE 2
ROLLER ALIGNMENT GENERAL CONFIGURATION

ROLLER ALIGNMENT LAYOUT

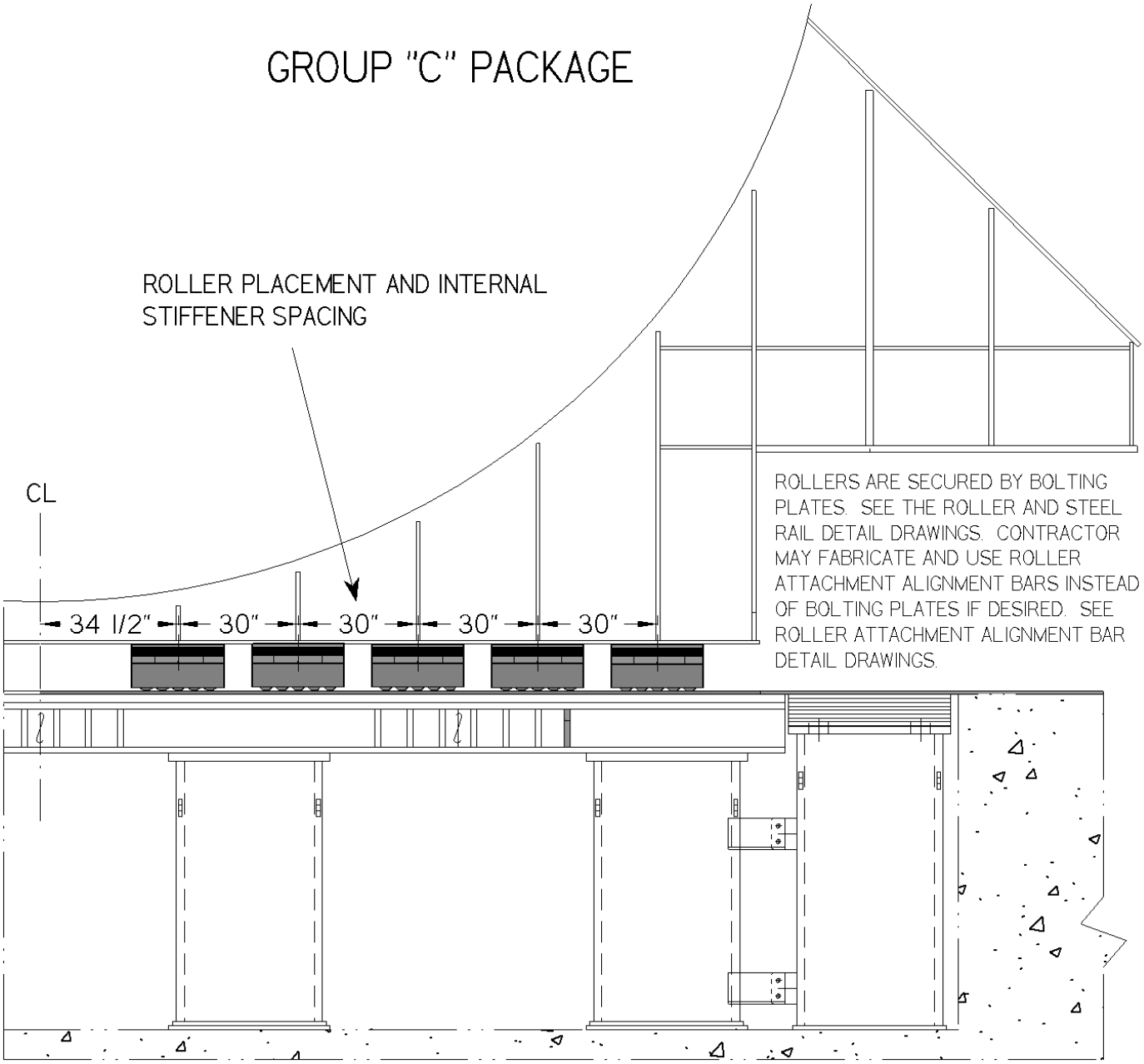

ROLLER PLACEMENT ELEVATION VIEW

(Not to Scale)

ROLLER ALIGNMENT LAYOUT

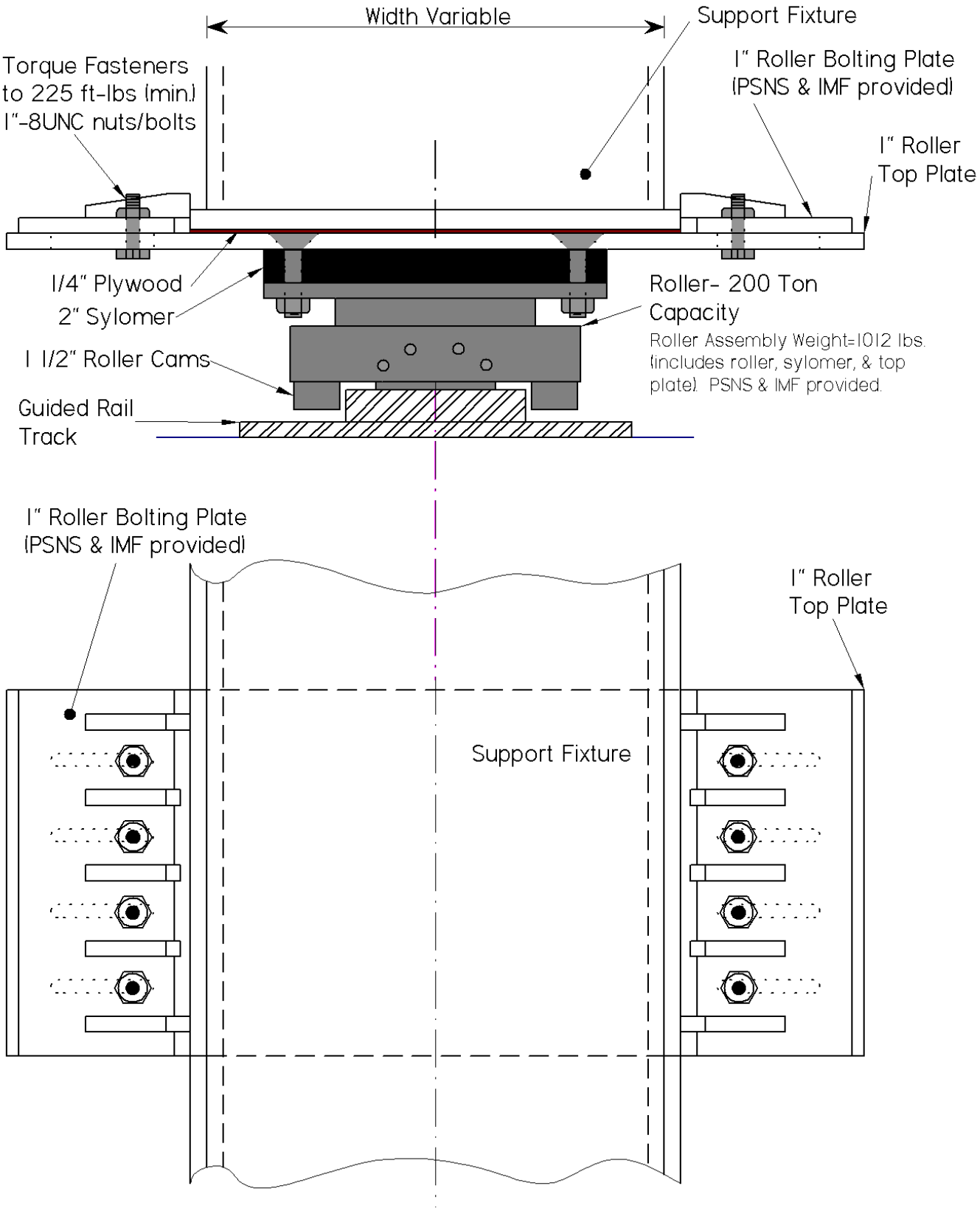

ROLLER AND STEEL RAIL DETAILS

(Not to Scale)

ROLLER ALIGNMENT LAYOUT

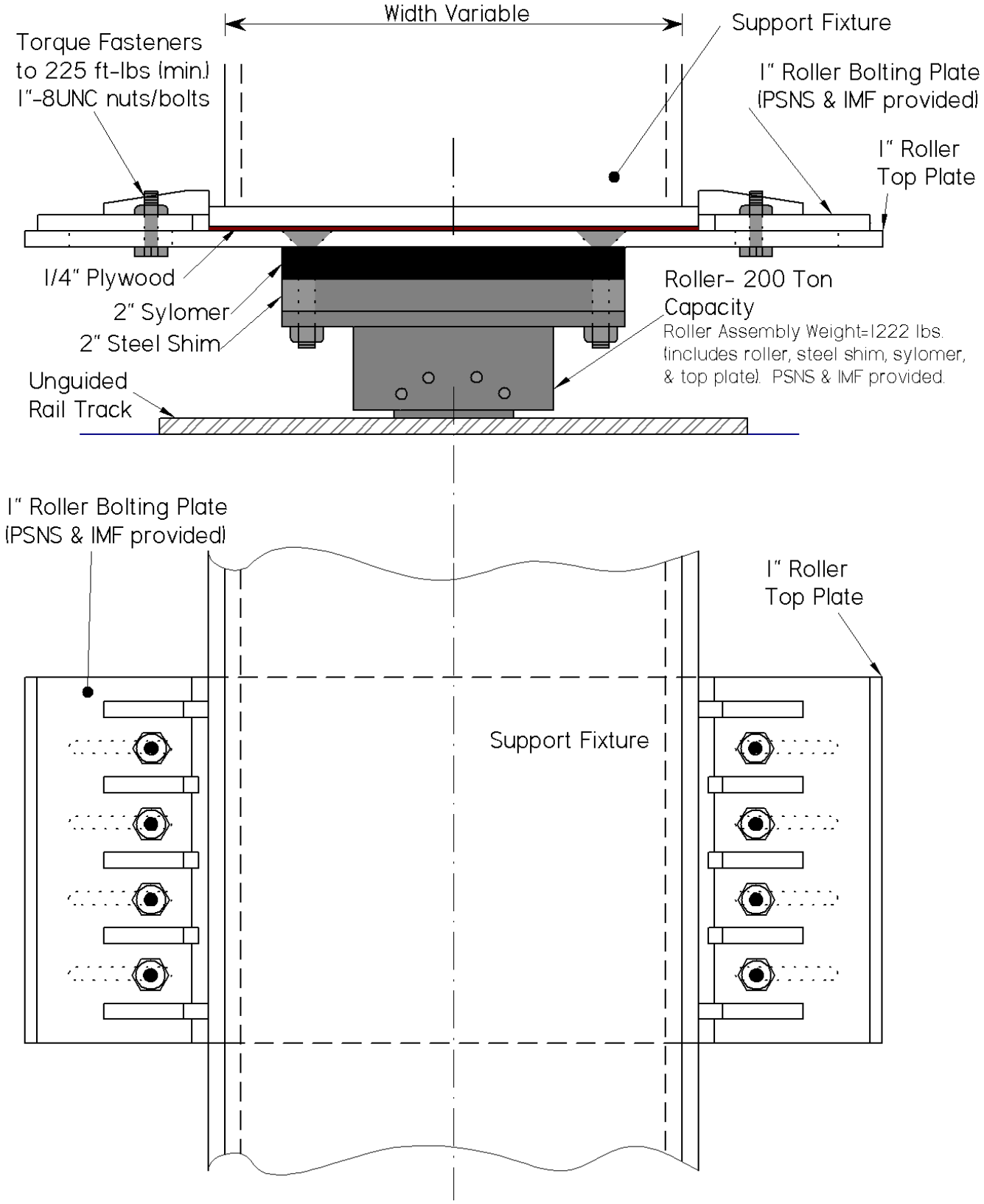

ROLLER AND STEEL RAIL DETAILS

(Not to Scale)

ROLLER ALIGNMENT LAYOUT

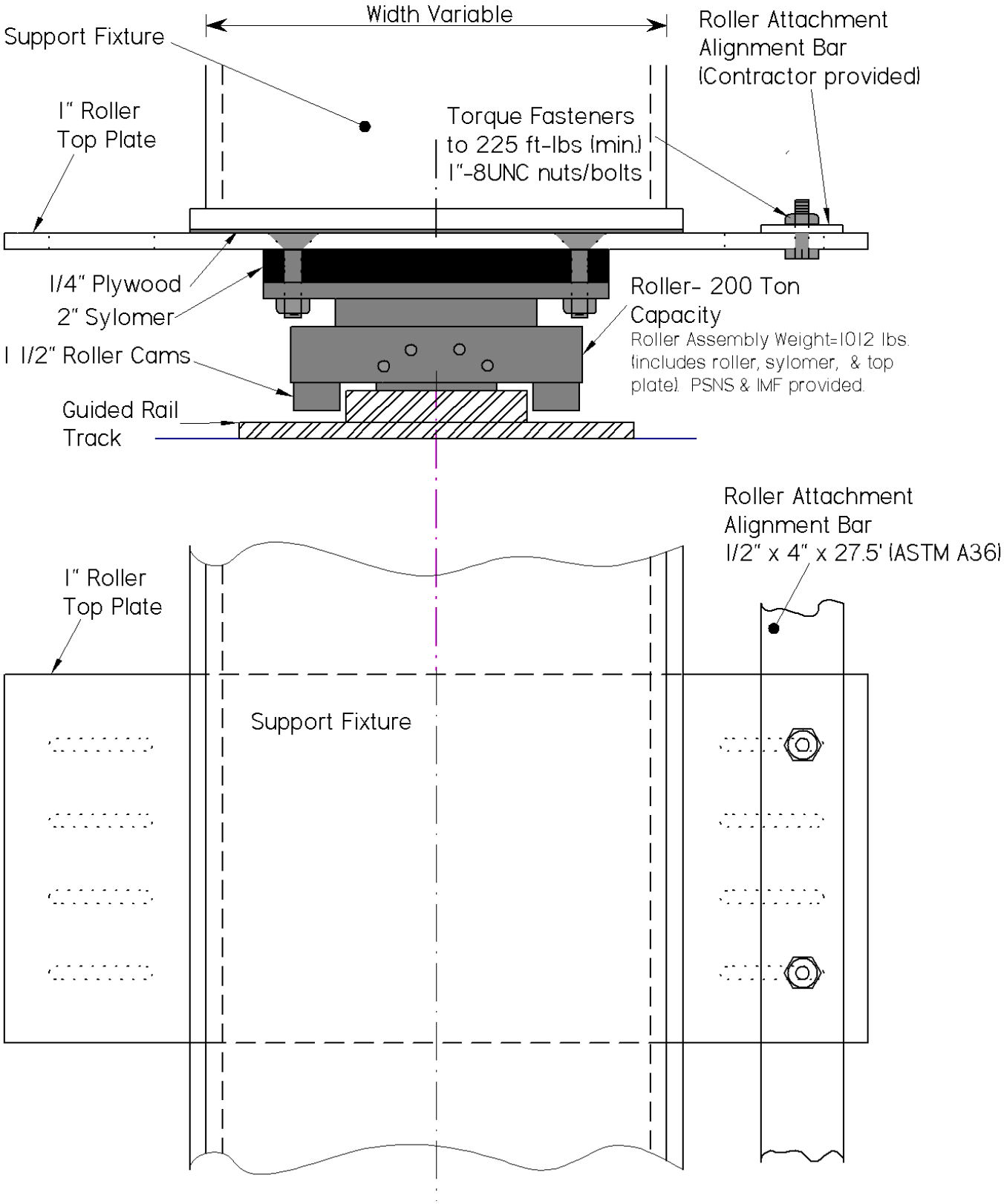

ROLLER ATTACHMENT ALIGNMENT BAR

(Not to Scale)

ROLLER ALIGNMENT LAYOUT

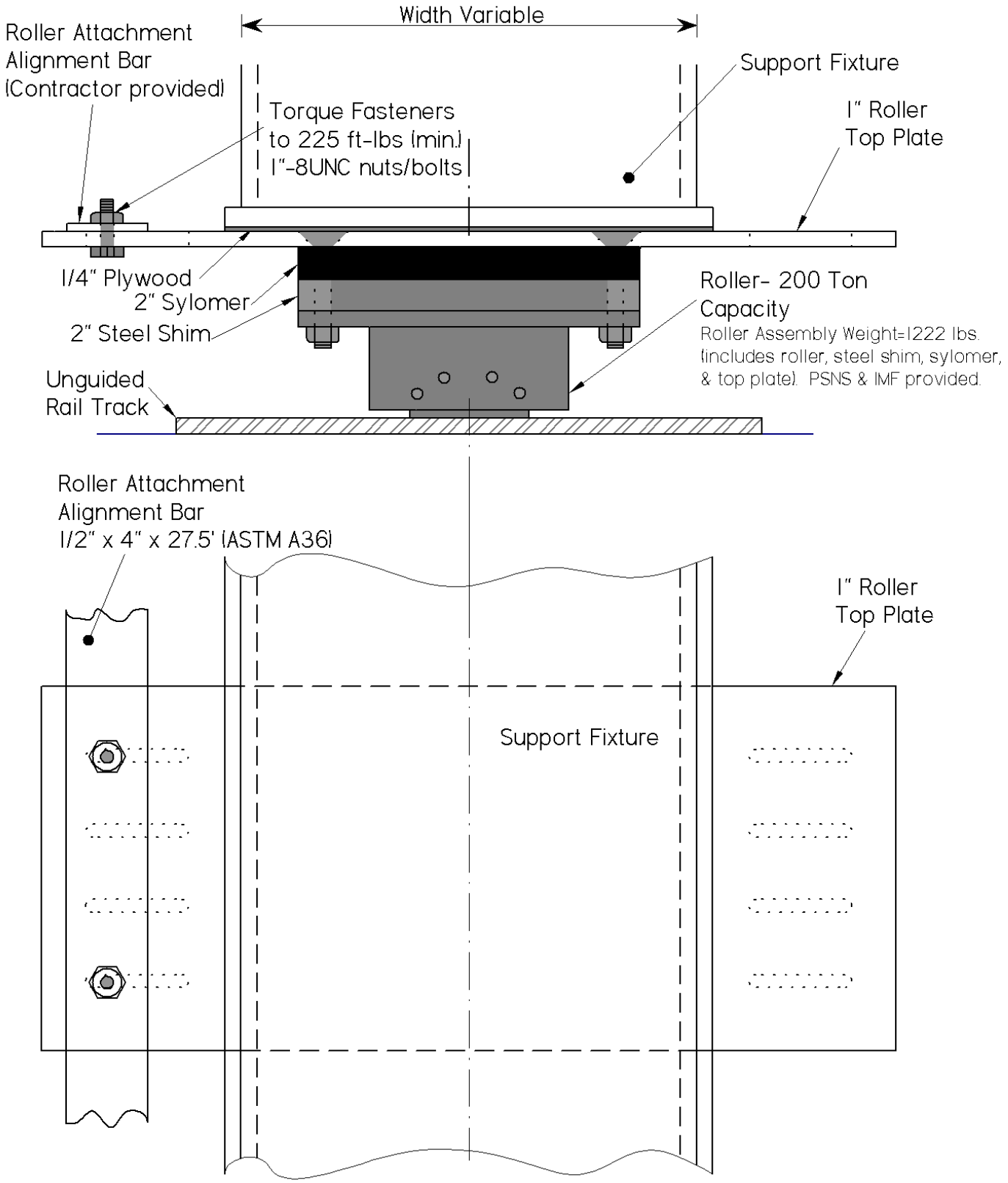

ROLLER ATTACHMENT ALIGNMENT BAR

(Not to Scale)

ROLLER ALIGNMENT LAYOUT

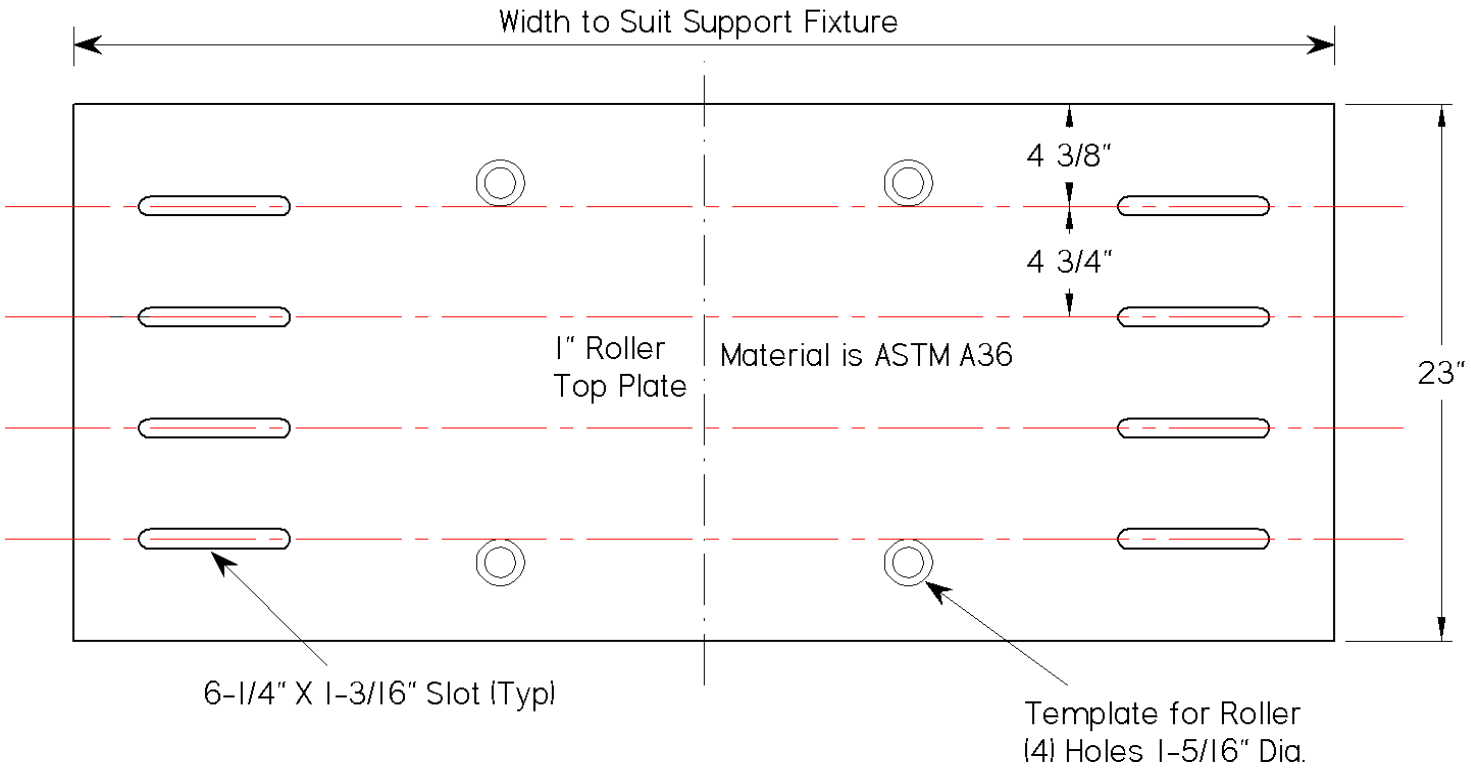

ROLLER TOP PLATE PLAN VIEW

(Not to Scale)

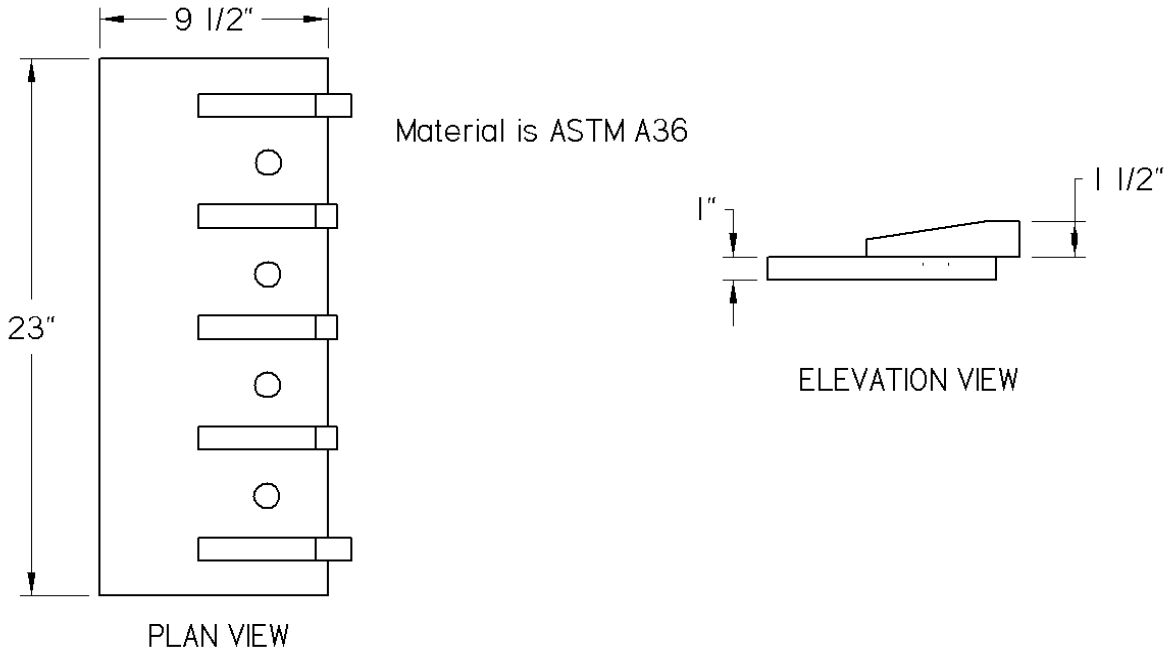

ROLLER BOLTING PLATE

(Not to Scale)

TOW EQUIPMENT ATTACHMENTS

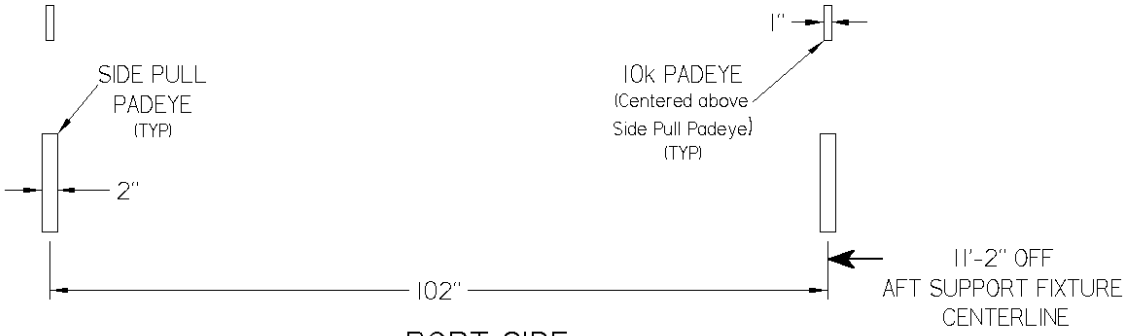

PORT SIDE
LOOKING INBOARD (EAST)

(NOT TO SCALE)

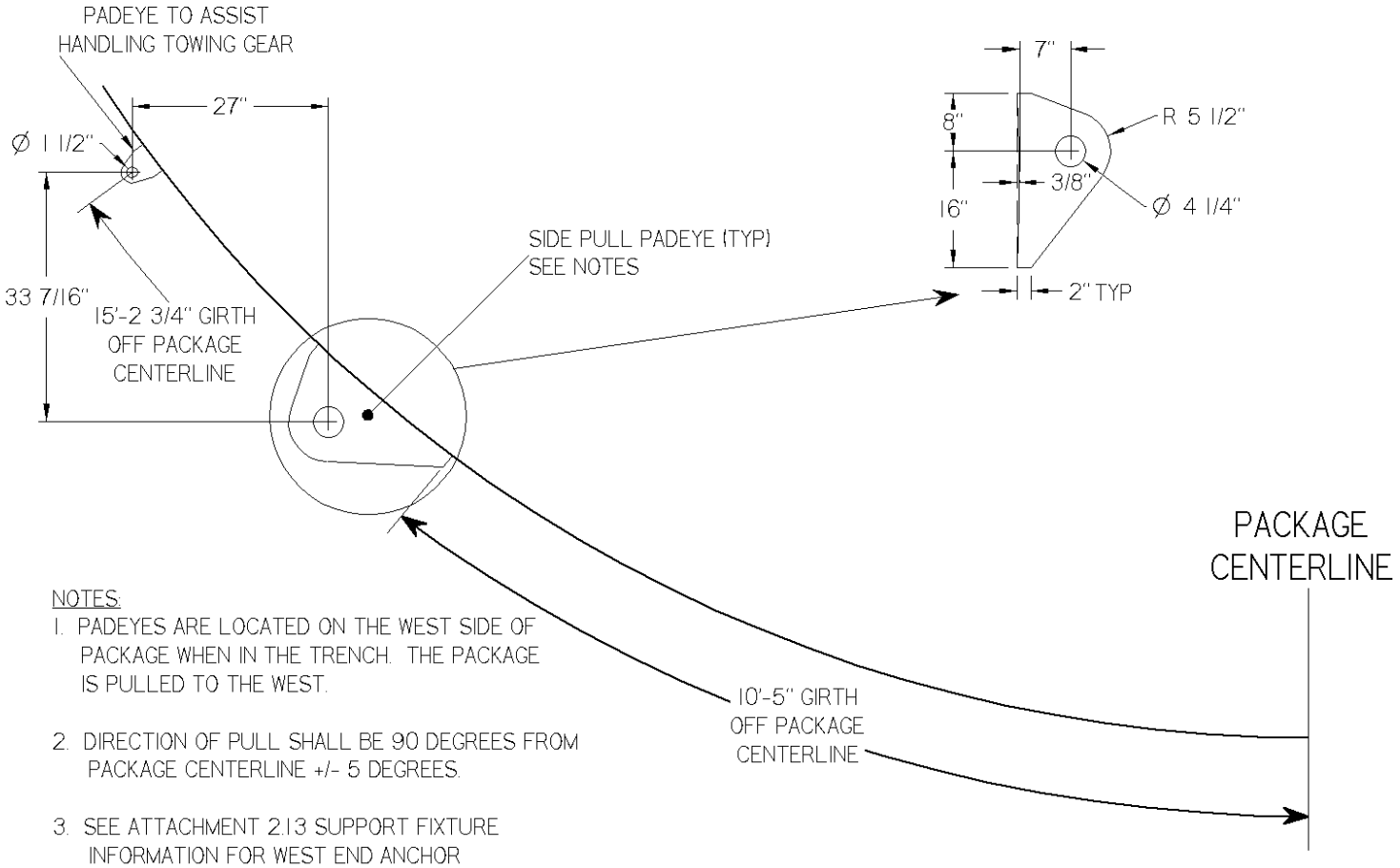

NOTES:

1. PADEYES ARE LOCATED ON THE WEST SIDE OF PACKAGE WHEN IN THE TRENCH. THE PACKAGE IS PULLED TO THE WEST.
2. DIRECTION OF PULL SHALL BE 90 DEGREES FROM PACKAGE CENTERLINE +/- 5 DEGREES.
3. SEE ATTACHMENT 2.13 SUPPORT FIXTURE INFORMATION FOR WEST END ANCHOR DESIGN.

GROUP "C" PACKAGE
PORT SIDE, LOOKING FORWARD (NORTH)

(NOT TO SCALE)

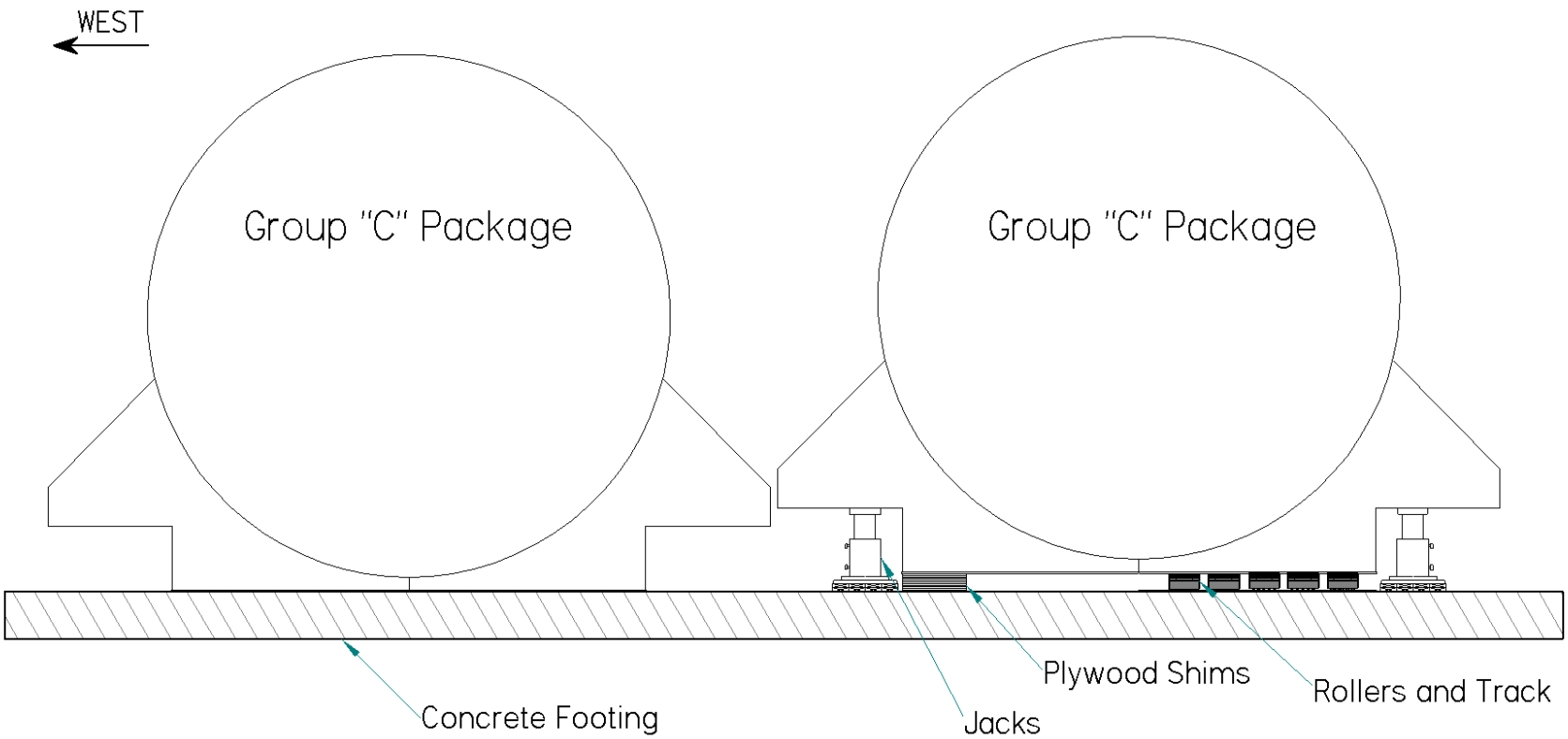

JACKING FOR ROLLER AND RAIL REMOVAL

(CONCEPTUAL)