PART I - THE SCHEDULE

SECTION C: DESCRIPTION/SPECIFICATION/WORK STATEMENT

TABLE OF CONTENTS

Paragraph No.	Title
C.1	GENERAL REQUIREMENTS
C.2	MANAGEMENT AND ADMINISTRATION
C.3	TASK ORDER PRICING
C.4	UNIT PRICED TASKS (UPT)
C.5	TOOLS AND EQUIPMENT
C.6	IDENTIFICATION OF WORK AND TASK ORDER PREPARATION
C.7	REVIEW OF CONTRACTOR PROPOSAL
C.8	ISSUANCE OF TASK ORDER
C.9	EXECUTION OF WORK
C.10	MINIMUM INSURANCE REQUIREMENTS
C.11	PERFORMANCE GUARANTEE OR BOND REQUIREMENTS
C.12	PARTNERING MEETINGS
C.13	WORK RESTRICTIONS
C.14	SCHEDULE
C.15	HEALTH AND SAFETY
C.16	QUALITY MANAGEMENT
C.17	TEMPORARY FACILITIES AND CONTROLS
C.18	ENVIRONMENTAL PROTECTION
C.19	ENVIRONMENTAL MANAGEMENT SYSTEM

GENERAL REQUIREMENTS

C.1 GENERAL INFORMATION

Except where otherwise stated, the Contractor shall furnish all labor, supervision, management, tools, materials, equipment, facilities, transportation, incidental engineering, and other items necessary to perform incidental design renovations, repairs, maintenance, replacements, alterations, demolition and NAVFAC Construction Category II, III and IV under this Fixed-Price Pavement, Roofing and Painting Contract (IDIQ). Projects that require a professional engineer's stamp can be included under this contract. NAVFAC construction categories are explained in a following subparagraph. Work will be performed in various locations within U.S. Naval Station Rota, Spain (NAVSTA Rota) and other locations on the Iberian Peninsula, including Moron Air Base and National Support Elements in Madrid, Valencia, and Lisbon, Portugal.

Performance requirements and standards will be provided in individual Task Orders. Project locations and scopes of work will be indicated on individual Task Order requests for proposal issued by the Government. The Contractor is required to comply with all applicable U.S. federal and local laws and regulations. All work performed shall conform to the Naval Facilities Engineering Command (NAVFAC) Guide Specifications, standard industry work practices, and the provisions of this contract. Unless otherwise directed by the Contracting Officer or his/her designated representative, all work shall be performed in accordance with the current sections specified, National Electrical Code, National Fire Code, International Building Code, Uniform Plumbing Code, Uniform Mechanical Code and Uniform Facilities Criteria. These Codes take precedence over all other direction that may be provided herein or with individual Task Orders.

C.1.1 Contract Type and Term

This is a fixed-price, indefinite-delivery, indefinite-quantity contract, with a one-year base period plus four one-year option periods. The option periods may be exercised at the discretion of the Government. Delivery or performance shall be specified in individual Task Orders issued hereunder. Projects are expected to be within the minimum/maximum dollar range of $3,000 to $1,000,000. Work ordered under this contract may require the Contractor to obtain a professional engineer's stamp for design services, require scope of work development by Contractor on site visit or perform based on a Government provide design. The Contractor may be required to provide narratives, sketches, material catalog cuts, and quantity take-off with each Task Order proposal to ensure common understanding. Pricing for each Task Order will be by Unit Priced Tasks (UPT) Work (non-negotiated) see ELIN's and/or Unit Priced Labor (UPL) Work (negotiated) methods.

C.1.2 Basic Principles of the IDIQ

A major element of the IDIQ process is the use of Unit Priced Tasks (UPT) Work (non-negotiated) for specific Category II through IV construction and repair tasks. Pre-prices must include not only the Contractor's overhead and profit, but also all other costs associated with doing business or in Subcontractor's proposals.

For each project, the Government and the Contractor follow the same steps:

1. Government issues a Request for Proposal
2. Conduct a Joint Scope Meeting at the site to review and discuss the work and the construction schedule;
3. Prepare a Detailed Scope of Work; Contractor prepares a price proposal in the format requested and submits a proposed construction schedule, list of Subcontractors and other documents required by the Task Order;
4. Government reviews the proposal to ensure the right tasks and quantities were used;
5. Government and Contractor negotiate price and schedule,
6. If Government is in agreement with price, schedule, Subcontractors, etc. it may issue a Task Order for the project.

C.1.3 Construction Work Categories

The Contractor is required to understand and comply with all local environmental or usage permit requirements, and shall, at no additional expense to the Government, obtain all appointments, licenses, and permits required to perform work under this contract. Evidence of such permits and licenses shall be provided to the Contracting Officer before work commences and at other times as requested by the Contracting Officer.

Category II construction services are primarily composed of projects with designs which have a limited number of disciplines. These projects may have substantial financial, schedule, and/or life safety risk. Local environmental or usage permits may be required. Building and/or site approvals are required. Projects are for renovations and/or some new construction. Design is obtained through the Designer of Record, which include routine designs, plans, and limited specifications (supplemented by contractor-furnished shop drawings and submittals), and site investigation or studies. These projects may be for installation, replacement or repair of equipment/systems that incorporate conventional technology.
Examples of typical Category II work include: fire protect alarm installation or replacement; pedestrian bridges; pre-engineered buildings with utilities; conversion of space; dredging; electrical standby generator systems, energy projects for single EMCS system; erosion control; exterior electrical distribution, security fences for ATFP; installation or replacement of fire protection systems; reinforced foundations; replacement or upgrades of HVAC systems > 5 tons; multi-story plumbing; residential housing; road construction; runway or taxiway lighting; traffic signals; storm drainage; sports fields; fire protection sprinklers; utility upgrades; and inspection, maintenance, and repair of waterfront facilities.

Category III construction services are primarily composed of minor renovation or repair. No permits are required unless specifically requested in the Task Order; however, the Contractor shall comply with all applicable local laws. Building and/or site approvals are not required. There are no plans and specifications; work is developed from a scope of work supplemented by professional engineering staff as needed with sketches, catalog cuts, and/or narrative descriptions. Examples of typical Category III work include: fire protection alarm relocation; pre-engineering buildings (>120 sf) with no utilities; installation of pre-fabricated carports; replacement of conveyors; non-structural demolition; overhead door repair/replacement (>100 sf); replacement of non-load bearing wall; exterior insulation finish system; HVAC package units (<5 tons, ground level); paving, asphalt overlay, large repair; sprinkler head, fire protection relocation/replacement (<21); roof replacement, structural repair in-kind; stairs, interior or exterior, single flight pre-engineering; utilities – connecting to existing with provider consultation; walls partition, no ingress/egress issues, no utilities; and window installation on non-load bearing walls.

Category IV construction services includes work without permits and is built from client requirements. There is no structural, electrical (primary distribution system), mechanical (HVAC), fire protection, intrusion detection, anti-terrorism force protection, or hazardous abatement. It may include replacement or repair of fixtures, hardware, and finishes. Examples of typical Category IV work include protective bollards (not on piers or for ATFP purposes); pre-engineered buildings (<120 sf) with no utilities; parking lot bumpers; pre-engineered bus stop with no utilities; floor cabinet installation; wall cabinets; cable TV receptacles; floor carpet replacement/installation; laminate countertop installation; solid surface countertop; under sink waste disposer installation; overhead garage door replacement (<100 sf); replacement of personnel doors (non-fire rated doors in non-fire rated walls); asphalt repair or replacement; concrete driveway repair or replacement; dumpster enclosure; ceiling fan replacement; exhaust fan replacement; lighting fixture replacement; plumbing fixture replacement; ceramic floor tile; hardwood and vinyl floor; garage door electric openers; GFCI electrical receptacles; gutters and downspouts; disabled ramps at curbs; handrail/guardrail replacement; replacing door hardware; replacing window hardware; baseboard electric heater replacement; duct installation; pipe installation; wall installation (non-load bearing); landscape sprinkler system; landscaping (<5,000 sf); installing wall mirrors; installing motion detectors; exterior painting (no lead paint removal); interior painting (no lead paint removal); concrete or synthetic parking bumpers; parking lot striping; landscaping pavers; built-up roof repair (no structural); fiberglass roof shingle repair by replacement (no structural); standing seam metal roof repair (no structural); light duty shelving; concrete sidewalk; exterior vinyl siding; architectural signage; clearing and grubbing site preparation (<1 acre); roof skylight; solar lighting; wood exterior stair replacement; roof ventilator replacement;

interior wall wainscot; ceramic tile wall; vinyl base wall; vinyl covering wall; film tint windows; window replacement (non-load bearing); storm windows.

C.2 MANAGEMENT AND ADMINISTRATION

C.2.1 Permits and Licenses

The Contractor shall obtain all required permits, licenses, and authorizations to perform work under each task order and comply with all the applicable Federal, state and local laws and regulations. Individual permit requirements will be identified in individual Task Orders.

C.2.2 Directives, Instructions and References

Applicable Department of Defense (DoD), Secretary of the Navy (SECNAV), Chief of Naval Operations (OPNAV), and other directives, instructions, and references may be provided in individual Task Orders. Additional requirements specific to the individual Task Order may incur a cost beyond the UPT negotiated. Such costs are to be presented in the proposal and considered in negotiations of the Task Order price.

C.2.3 Government Furnished Facilities, Equipment, Materials and Services

In accordance with FAR 52.245, *Government Property*, and NAVFAC clause 5252.236-9305, *Government –Furnished Property, Materials and Services*, the Government will furnish water and electricity at existing outlets required for the work to be performed under the contract at no cost to the Contractor. Information concerning the location of existing outlets may be secured from the Contracting Officer. The Contractor shall provide and maintain, at its expense, the necessary service lines from the existing Government outlets to the work site and provide and maintain backflow prevention devices on connections to domestic water lines and electrical transformer provisions on connections to electric lines. Meet all Federal, State, local, and activity codes and regulations for backflow prevention devices and electrical transformer provisions. Services required by the Contractor, for which there are no available Government outlets, shall be provided by the Contractor at no cost to the Government.

1. Material and Equipment. Infrequently the Government may provide materials or equipment to be installed by the Contractor. The labor and material costs necessary for the installation will be considered non-pre-priced items as described herein.

(a) The Contractor, with his/her own forces, shall transport all Government-furnished equipment/materials described on the Task Order at his/her own expense. The equipment/materials will be transported from the Government storage area to the work site indicated on the Task Order.

(b) The Contractor assumes the risk and responsibility for the loss or damage to Government-furnished property.

2. Availability and Use of Utility Services.

Temporary Utilities
Provide temporary utilities required for construction. Materials may be new or used, must be adequate for the required usage, not create unsafe conditions, and not violate applicable codes and standards, including Ley 31/1995, RD 39/1997, and RD 604/2006 and RD 1627/1997.

Payment for Utility Services
The Contractor will be required to pay for all utilities services used on this contract. The Government will make all reasonably required utilities available to the Contractor from existing outlets and supplies. Unless otherwise provided in the contract, the amount of each utility service consumed will be charged to or paid for by the Contractor at prevailing rates charged to the Government or, where the utility is produced by the Government, at reasonable rates determined by the Contracting Officer. Carefully conserve any utilities furnished without charge.

Reasonable amounts of the following utilities will be made available to the Contractor at the following rates:

Electricity - : $245.36 per MWH.
Potable Water - : $6.76 per KGal.
Sanitary Sewer - : $8.34 per KGal.

Contractor will be charge the following rates per hour for Maintenance Services when Public Works Utility personnel are required:

Emergency - $103.20
Urgent - $86.00
Routine - $68.80

The point at which the Government will deliver such utilities or services and the quantity available will be designated by the Contracting Officer. Pay all costs incurred in connecting, converting, and transferring the utilities to the work. Make connections, including providing backflow-preventing devices on connections to domestic water lines; and providing transformers; and make disconnections. Under no circumstances will taps to base fire hydrants be allowed for obtaining domestic water.

Meters and Temporary Connections
Connections to existing utilities will be authorized under a reimbursable basis. Any connections will be performed or supervised by NAVFAC personnel as required. At the Contractors expense and in a manner satisfactory to the Contracting Officer, provide and maintain necessary temporary connections, distribution lines, and meter bases (Government will provide meters) required to measure the amount of each utility used for the purpose of determining charges. Notify the Contracting Officer, in writing, 5 working days before final electrical connection is desired so that a utilities contract can be established. The Government will provide a meter and make the final hot connection after inspection and approval of the Contractor's temporary wiring installation. The Contractor will not make the final electrical connection.

Advance Deposit
An advance deposit for utilities consisting of three estimated month's usage or a minimum of $500.00 will be required. The last monthly bills for the fiscal year will normally be offset by the deposit and adjustments will be billed or returned as appropriate. Notification of the due date for this deposit will be mailed to the Contractor prior to the end of the current fiscal year. The Contractor will provide 15 days in advance information and fulfill attached Private Party Package information sheet signed and stamped. The contractor will receive a bill every month and will have to pay it with a check at PWD Financial Branch.

Information shall be sent via e-mail or Fax to Marquez Acuña, Manuel DoD Af USN SP NAVSTA ROTA SP and Ayllon Gonzalez, Juan Antonio DoD Af USN SP NAVFAC EURSWA NAPLES IT (ROTA SP) (FAX 956- 82 6437)

Final Meter Reading
Before completion of the work and final acceptance of the work by the Government, notify the Contracting Officer, in writing, 5 working days before termination is desired. The Government will take a final meter reading, disconnect service, and remove the meters. Then remove all the temporary distribution lines, meter bases, and associated paraphernalia. Pay all outstanding utility bills before final acceptance of the work by the Government.

Temporary Conditions
At the Contractors expense and in a manner satisfactory to the Contracting Officer, provide and maintain necessary temporary connections, distribution lines, and meter bases required to measure the amount of each utility used for the purpose of determining charges. Notify the Contracting Officer, in writing, 5 working days before final electrical

connection is desired so that a utilities contract can be established. The Government will make the final hot connection after inspection and approval of the Contractor's temporary wiring installation. The Contractor will not make the final electrical connection.

Sanitation

Ley 31/1995, RD 39/1997, and RD 604/2006 RD 1627/1997. Provide adequate sanitary conveniences of a type approved for the use of persons employed on the work, properly secluded from public observation, and maintained in such a manner as required and approved by the Contracting Officer. Maintain these conveniences at all times without nuisance. Upon completion of the work, remove the conveniences from the premises, leaving the premises clean and free from nuisance. Provide portable chemical toilets unless otherwise approved or comparably effective units, and periodically empty wastes into a municipal, district, or station sanitary sewage system, or remove waste to a commercial facility. Any penalties and / or fines associated with improper discharge will be the responsibility of the Contractor. Coordinate with the Contracting Officer and follow station regulations and procedures when discharging into the station sanitary sewer system. Include provisions for pest control and elimination of odors. Locate the facility behind the construction fence or out of the public view.

Telephone

Make arrangements and pay all costs for telephone facilities desired.

Obstruction Lighting of Cranes

Provide a minimum of 2 aviation red or high intensity white obstruction lights on temporary structures (including cranes) over 30 meter (100 feet) above ground level. Light construction and installation must comply with FAA AC 70/7460-1. Lights must be operational during periods of reduced visibility, darkness, and as directed by the Contracting Officer.

Fire Protection

Provide temporary fire protection equipment for the protection of personnel and property during construction. Remove debris and flammable materials daily to minimize potential hazards.

PRIVATE PARTY CONTACT - INFORMATION

DATE:_____

1. COMPANY NAME: _____

2. COMPANY MAILING ADDRESS (FOR BILLING PURPOSES):
_____
_____
_____

PRIVATE PARTY FINANCIAL POINT OF CONTACT

3. FINANCIAL P.O.C: _____

   CONTACT TELEPHONE: _____

   FAX: _____

   E-MAIL: _____

4. SITE P.O.C: _____

   SITE P.O.C TELEPHONE: _____

FOR OFFICIAL USE ONLY

1. ___ Security Deposit Amount _____

2. ___ Security Document _____

3. ___ Billing Document_____

4. ___ SPON, CON, & JON entered into the system

5. ___ Spreadsheet Created in Access

6. ___ Job order numbers sent to the appropriate business line
(Utilities, transportation, ship support)

Activity Number Assigned: _____

SERVICES REQUESTED

(Check services required)

UTILITIES

- ☐ **Electric**_____
- ☐ **Water**_____
- ☐ **Sewage**_____
- ☐ **Steam**_____
- ☐ **Gas**_____
- ☐ **Utility H/U**_____

TRANSPORTATION

- ☐ **Vehicle Rental** _____
- ☐ ***Cranes**_____

- ☐ **Minor Work**
- ☐ **Emergency Service**
- ☐ **Preventive Maintenance**

LOCATION: _____

ADDITIONAL DESCRIPTION:_____

_____

_____

START DATE: _____ **END DATE:** _____

TOTAL ESTIMATED COSTS FOR THE FISCAL YEAR: _____

***CRANE RENTALS ARE ON A CASE BY CASE BASIS**

POINTS OF CONTACT

1. **WENDY HICKS** **(757) 341-1320**
   Financial Management Analyst
   wendy.hicks@navy.mil

   POC EUROPE

2. **BEVERLY HAMLIN** **(757) 341-1316**
   Financial Technician
   Beverly.hamlin@navy.mil

Please contact the Utilities department **AND** one of the Financial Analysts above when you are preparing to leave the site in order to final bill your account and refund your security deposit promptly. Failure to do so may result in additional billings and will result in the delay of your security deposit being returned. Any one listed above is available to assist you with account questions as well.

CONTRACT TERMS AND CONDITIONS

1. NAVFAC Mid-Atlantic requires a security deposit from all private party and NAFI customers. The amount of the deposit will be equivalent to **three** months average billing for all long-term recurring services. For non-recurring services a full advance payment is required for the estimated amount. An estimate will have to be provided by the Transportation Department for applicable rental services. The security deposit will be refunded after services have been terminated if the account is paid in full. Otherwise the security deposit will be applied to the outstanding bills.

2. All privatized housing accounts are exempt from the security deposit requirement.

3. After the account has been established, you will receive a 12-digit job order number that will track an individual service for an entire year. NAVFAC Mid-Atlantic bills on the last business day of the month, and payment by check or credit card is required within 30 days. If there are any questions concerning with your billing, please contact one of the Financial Analysts listed on the contact sheet as soon as possible so that we can research the issue. It is **your** responsibility to contact one of the Financial Analysts listed on the contact sheet for any disputes or account closures.

4. In the event the customer no longer requires the services, provide notification to Point of Contacts listed above. Your account will have to be paid in full as soon as you receive the final billing. Please contact NAVFAC Mid-Atlantic Financial Analyst Wendy Hicks at 757-341-1320 when you are preparing to leave the site permanently in order to close out your account. Failure to do so may result in additional billings and will result in the delay of your security deposit being returned.

5. We will establish an account for private party customers only after the required information has been received.

I agree to the terms and condition of this contract

Authorized Representative (Print Name):_____

Signature and stamp:_____

Date: _____

FORMS OF PAYMENT

NAVFAC MID-Atlantic accepts money orders, cashier's checks, personal checks, as well as credit cards issued by Visa, MasterCard, American Express and Discover. Credit Card payments can be made online using pay.gov.

~~~~~~

PAYMENT INFORMATION

Check One: ☐ Advance Deposit ☐ Security Deposit Payment

FAX OR EMAIL COMPLETED FORM TO

9742 Maryland Avenue • Norfolk VA 23512 • Phone: 757-341-1320 • FAX: 757-341-1315
Email: wendy.hicks@navy.mil
~~~~~~

3. Elevators. Any temporary use of an existing elevator shall be by arrangement through the Contracting Officer and subject to the Contracting Officers controls. Such use will be of an intermittent nature. The Contractor shall provide and maintain suitable and adequate protective covering for the elevator machinery, the hatchway entrance, and the interior of the elevator during the period of temporary use. Loads in excess of the rated capacity of the elevator will not be permitted.

The Government will bear the cost of electrical current for the operation of the elevator. On completion of the work, the Contractor shall remove the protective coverings together with any resultant dirt and debris, and leave the equipment in a condition equal to that prior to commencement of contractor operations.

4. Liability and Government-Owned Property. The Contractor shall be held financially liable and responsible for any damage to Government property that is incurred due to his/her fault or negligence or the fault or negligence of his/her employees in the performance of this contract.

C.2.4 Contractor Furnished Items

Except for items identified as Government Furnished, the Contractor shall provide all equipment, materials, parts, supplies, components, and facilities to perform the requirements of this contract. The Contracting Officer or designated Government representative may inspect Contractor-furnished items for adequacy and compliance with contract requirements. Inadequate or unsafe items shall be removed and replaced by the Contractor at no cost to the Government. Materials containing asbestos, lead, and PCBs shall not be brought on site. The Contracting Officer may at any time require Samples, Material Safety Data Sheets (MSDS) or Manufacturer’s Data Cut Sheets of Materials used in this contract.

1. Equipment. Administrative supplies and equipment shall be furnished by the Contractor. Items of equipment necessary to perform work as required or ordered under this contract shall be furnished, maintained and operated by the Contractor.

The Contractor shall cover equipment that is to remain in place within the area of contract operations and protect it against damage or loss. Equipment temporarily removed shall be protected, cleaned and replaced equal to its condition prior to starting work. Security for equipment or material that is to be reused and is removed for temporary storage shall be the sole responsibility of the Contractor.

2. Materials and Supplies. Materials and supplies procured by the Contractor shall meet the specifications, standards, and manuals listed in these specifications. The Contracting Officer may require test data showing that any materials or supplies procured by the contractor meets the specifications. The Contracting Officer may at any time require samples of materials to be used in work performed under this contract. If the quality of an item is not specified, it shall be of acceptable industrial grade and quality, equal to or better than the manufacturer's original and will be compatible with existing systems.

3. Parts. Replacement parts shall be new. If new parts are not available, the Contractor may request approval in writing from the Contracting Officer to use rebuilt parts. All parts whether new or rebuilt shall carry the full warranty required by this contract.

4. Damage or Loss of Contractor's Supplies and Employee Property: The Government does not assume any liability from fire, theft, accident, or any other cause resulting in damage or loss of Contractor supplies or employees property.

C.2.5 Management

The Contractor shall manage the total work effort associated with the services required herein to meet the performance objectives and standards. Such management includes but is not limited to planning, scheduling, cost accounting, report

preparation, establishing and maintaining records, and quality control. The Contractor shall provide a staff with the necessary management expertise to assure performance objectives and standards are met.

C.2.6 Personnel Requirements

C.2.6.1 Key Personnel

The Contractor shall confirm to the Contracting Officer the List of Key Personnel and their qualifications originally submitted as part of the proposal. The Contractor shall submit this confirmation within 15 days of contract award. Any changes to key personnel shall be approved by the Contracting Officer. The Contractor will provide any additional information requested by the Contracting Officer to certify their qualifications.

The Contractor shall submit to the Contracting Officer a finalized Organizational Chart showing the lines of authority of the key personnel and on-site supervisor(s) for this contract. The chart shall include names of personnel and their position title in this contract. At a minimum, include the Project Manager (PM), Quality Control Manager (QCM), Site Safety and Health Officer (SSHO), and on-site supervisor(s) and who they will report directly to for this contract. The key personnel shall be revised as applicable for the contract. The Contractor shall submit the Organizational Chart within 15 days of contract award.

C.2.6.1.1 Project Manager (PM)

The Contractor shall provide a PM who has relevant experience at a comparable level of responsibility in projects of similar size, scope and complexity. The PM must have the ability to be productive on multiple projects simultaneously at different locations. The PM shall have full authority to act for the Contractor on all contract matters relating to this contract.

C.2.6.1.2 Site Safety and Health Officer (SSHO)

The Contractor shall provide a SSHO whose primary duty and responsibility is to prepare and enforce the Contractor's safety program on this contract. The SSHO shall have fulfilled the following pre-requisite training and experiences before being hired as the SSHO under this contract:

The SSHO shall have completed five years of satisfactory experience in preparing and enforcing safety programs on contracts of similar size and complexity in the past, and have completed the OSHA 30-hour construction safety class or equivalent within the last five years and an average of at least 24 hours of safety training per year for the past five years. The SSHO shall serve as the SSHO solely and may not assume any additional organizational role for the Contractor. More specific qualification and performance requirements for the SSHO are detailed in paragraph C.16.6.

C.2.6.1.3 Quality Control Manager (QCM)

The Contractor shall provide a QCM who shall have full authority and responsibility for assuring performance objectives and standards identified in Task Orders are met. The QCM may or may not be the same person as the PM, unless specified under requirements of individual Task Orders. In the case where an individual Task Order requires that a QCM cannot serve separate functions, such services shall be included as a non-pre-priced item in that Task Order. More specific qualification and performance requirements for the QCM are detailed in paragraph C.17.

C.2.6.2 Employee Requirements

The Contractor shall provide experienced, qualified, and capable personnel to perform the work in this contract. Personnel shall be fully knowledgeable of all safety and environmental requirements associated with the work they perform. Competent personnel shall be provided as required by each Task Order.

C.2.6.2.1 Employee Appearance

The Contractor shall ensure that all employees present a professional appearance that is appropriate for their position. The Contracting Officer reserves the right to determine the acceptability of any clothing worn. Employee identification shall not be substituted for station required passes or badges.

C.2.6.2.2 Employee Conduct
Contractor employees and Subcontractor employees shall conduct themselves in a proper, efficient, courteous and businesslike manner.

C.2.6.2.3 Removal of Employees
The Contractor shall remove from the site any individual whose continued employment is deemed by the Contracting Officer to be contrary to the public interest or inconsistent with the best interests of National Security.

C.3 TASK ORDER PRICING

Pricing proposal methodologies for Task Orders that will be accepted on this contract, as follows:

1. Unit Priced Tasks (UPT) Work is defined as an IDIQ work item that includes all direct and indirect costs plus profit associated with the particular unit of work. All materials and equipment (rented or owned) required for the accomplishment of a UPT shall be included within the respective exhibit line item prices in IDIQ ELIN's. The FFP for the task order is determined by multiplying the exhibit line item unit prices by the quantities ordered.

2. Unit Priced Labor (UPL) work is defined as IDIQ work that utilizes negotiated labor hours cost and materials/ equipment to accomplish a task not required by the fixed-price portion of the contract. UPL includes separately negotiated labor cost and materials/ equipment items. The Contractor shall prepare and furnish a detailed cost estimate identifying proposed labor hours, material, and equipment costs, which upon approval by the KO, becomes a FFP task order. For services or materials in excess of $3,000, the Contractor will make every effort to obtain a minimum of three quotes from qualified Subcontractors. Any circumstances precluding the minimum three quotes will be justified within the Contractor's proposal. The Contractor shall maintain complete supporting documentation (including responsibility and responsive checks) necessary to provide a complete and accurate audit trail of all actions for the Contracting Officer's review. Upon receipt and review of the form by the Contracting Officer, a coordination meeting may be initiated with the Contractor to resolve any discrepancies. Upon satisfactory review by the Contracting Officer, the non-pre-priced work will be accepted as the negotiated price. The negotiated price shall include the fully burdened rate for labor, material, and equipment, for competitive quotes. Non-pre-priced Items cannot represent the majority of the Task Order value and therefore will not exceed 20% of the Task Order value. Projects that cannot show a minimum of 80% Task Order value in pre-priced work shall automatically fall under the pricing methodology of non-pre-priced work.

    2.1 For Labor Hours Requirements: Sources like the current R. S. Means, or the Spanish sources Preoc or BEDEC of the ITeC shall be used for determining the number of labor hours required to complete the scope of work, the one that is more advantageous for the Government interest shall be applied. The total labor cost will be determined by totaling the number of direct labor hours and then multiplying by the labor hour unit price from ELIN's.

    2.2 For Material/Equipment Cost Requirements: Sources like the current R. S. Means, or the Spanish sources Preoc or BEDEC of the ITeC shall be used for shall be used for determining the material/equipment estimate, the one that is more advantageous for the Government interest shall be applied. Projected material requirements will include a list of materials establishing the size, quality, number of units, and unit prices. Pre-expended bin supplies and materials will not be included in the list of materials since the cost for these items were included in the labor hour unit price bid. Material prices provided by the Contractor shall be the lowest price available considering the availability of materials and the time constraints of the job. The direct material price shall be adjusted by all discounts, burden rates, and rebates for core value or salvage value that accrue to the Contractor.

Contractor shall provide the following for each component or task required:

1. Item Description

2. Direct Labor Hours
3. Description of proposed material
4. Number of units of material
5. Cost per unit of material (direct/bare costs only)
6. Description of proposed equipment
7. Time for which equipment will be required
8. Rental rate for equipment (direct/bare costs only)
9. Profit and overhead, if applicable

Upon issuance of a Task Order Request for Proposal (RFP), the Contracting Officer will specify whether or not the Task Order will use UPT. If UPL is specified, the Contractor will submit a proposal using either Pre-Priced Work alone, or a combination of pre-priced and non-pre-priced items, dependent upon the description of the work to be performed.

Any proposal that contradicts the pricing methodology instructed in the RFP will not be accepted.

C.4 UNIT PRICED TASKS (UPT)

C.4.1 The Contractor's UPT price include all requirements of performance described in IDIQ ELIN's attached and must include, but is not limited to the items listed below.

- General and Administrative Costs, Corporate Overhead, and Field Office Overhead, including but not limited to: salaries of personnel required to operate and manage the contract, Information Technology and computer equipment required to manage the contract, off base storage facilities, offices, administrative supplies, technical engineering services, job site supervision, vehicle operations and maintenance expenses and telephone charges.
- Disposition of waste materials.
- Daily and final site cleanup.
- Bond Premiums.
- Employee, Builder's Risk and Public Liability Insurance costs.
- Costs for purchase of equipment and vehicles; tools of the trade.
- Office equipment and supplies.
- Compliance with safety laws, regulations, and standards.
- Compliance with security requirements.
- Compliance with environmental laws associated with performing work in compliance with:
    - environmental laws/regulations/requirements,
    - individual Station regulations and reporting requirements, and
    - standard licenses, permits, and training (EXCEPT specialized licenses, permits, and training required specifically for a unique Task Order)
- The Contractor's risk factor.
- Company officers and support staff.
- Superintendents, Safety Manager, Quality Control Manager
- Quality control, including daily Quality Control Reports.
- Submittal preparation.
- Employer's portion of payroll taxes and fringe benefits.
- Profit.
- Work described in the contract that states the Contractor shall perform at no additional cost to the Government.
- All costs associated with computer hardware/software applications.
- Permits and Licenses

The costs for preparation of Task Order proposals including scoping meetings shall be the responsibility of the Contractor and shall be included in the appropriate ELIN. Task Order proposal preparation is not directly reimbursable. Government requests for Task Order proposals shall not constitute an award or commitment.

C.4.2 Proposals for modifications shall be priced in the same manner as submitted under the original proposal.

C.5 TOOLS AND EQUIPMENT

This contract covers multi-trade renovation, repair, rehabilitation, demolition, and minor construction projects. Below is a representative listing of tools and equipment that apply to the various trades. These items are indicative of, but not limited to, those that the Contractor is expected to provide, (to include usage and replacement as needed) as part of normal overhead cost covered in the cost.

Airlines (drop line)
Awl
Brushes
Bolt cutters
Broom
Cable pulling equipment (hand held)
Can Opener
Calking Gun
Chain Saw
Clamps
Compressor (sized as required to run tools)
Crow Bars
Drift Pins
Drill, pneumatic bits (up to 1 ¼ dia.)
Drill, Bits
Drill, Rotary hammer (up to 1 ¼ dia.)
Files
Gloves
Floats (hand held)
Hacksaws
Hammers, hand
Hammer, Jack
Jack, Hydraulic (12 tons or less)
Ladders (step to 12’ and extension to 24’)
Levels
Level, laser
Nailer, Pneumatic
Picks
Planes, Electric (hand held)
Power Actuated Fastening Tools
Pot Hook
Punches
Rasps (files)
Rivet Sets (Light, hand held)
Rules
held)
Saws, Electric Hand, Circular
Saws, Backsaws and Miter Box

All hand tools
Axes
Barricades, Safety
Barrier tape
Cable cutters
Cable pullers/Hoist (hand held)
Caulking/Yarning Irons
Chalk line
Chisels
Cleaning Equipment (hand held)
Conduit bender
Dividers
Drill, pneumatic
Drill, Motors (hand held)
Drill, Hole Saw
Extension Cords
Fish tapes
Flash Lights
Groover, Pipe (hand held)
Hot Tap (hand held)
Hammers, chipping
Industrial Vacuum and HEPA Vac
Knives
Lead Pot and Ladle
Levels, Builders
Lighting, Temporary (up to 6 each)
Nail Sets
Planes (hand held)
Pliers
Plumb Bob
Personal Protective Equipment
Rake
Reinforcing steel, Shear and Bender (hand held)
Rollers-Flooring
Safety Equipment (Personal Protective Equipment) Sanders (hand
Saws, Hand
Saws, Electric Hand, Reciprocating
Saws, Power Miter Box

Saw Horses
Scrapers (hand held)
Screw Drivers, Electric
Shears (hand held)
Sledgehammers
Staplers, Air/Hand
Steel Framing Tampers (hand held, non-powered)
Temporary Lighting (400 square feet)
Torch, hand
Traffic delineator (cones or candle sticks)
Trowels (non-powered, hand held)
Traffic cones
Vacuum, wet/dry (5 gal)
Vice
Warning Tape (Up to 100')
Wire Strippers
Scaffolding, Portable, (8' table height)
Screw Drivers
Scribers
Shovels
Squares
Steel Framing Tools, Lightweight
Tapelines
Tarpaulins (12' X 24", maximum of 5 each)
Tin Snips
Torch Igniters
Trash Receptacles (35/gallon, 4 each)
Tool Boxes (personal)
Tubing Cutters (hand held, non-powered)
Vehicles (up to 1.5 ton)
Volt Meter, volt/ohm meter
Wheel Barrow (non-powered)
Wrenches

C.6 IDENTIFICATION OF WORK AND TASK ORDER PREPARATION

C.6.1 As the need exists for performance under the terms of this contract, the Contracting Officer or authorized representative will notify the Contractor of an existing requirement. The Government's Request for Task Order Work will address the following (as applicable):

1. Description of work
2. Sketches, specifications, and/or as-built drawings
3. Local environmental and usage permit requirements.
4. Special considerations
5. Meeting and submittal schedule requirements
6. Technical and contractual Points of Contact (POC)
7. The completion deadline/Period Of Performance (POP)

C.6.2 The Contracting Officer will issue a Task Order Request for Proposal (RFP) and the Contractor shall respond to the Government's request for Task Order (RFP) work within two working days upon receipt of the requirement. The Government will schedule a job site visit between the Contractor and the Contracting Officer or authorized representative, and the Contractor shall participate in a meeting to further define the scope.

C.6.3 After identification and determining the scope of work from the site visit, the Contractor shall prepare a proposal for accomplishment of the task. The Task Order RFP may include edited Unified Guide Specifications, additional station specific requirements, and any inspection criteria, environmental criteria, submittals, etc. that supplements or supersedes the requirements provided and referenced in the basic contract.

C.6.4 The Contractor's proposal must be supported by necessary documentation to indicate that adequate planning has been done to accomplish the requirement, as identified in the Task Order RFP. Examples of documentation that might reasonably be expected would include: Contractor prepared drawings/sketches, catalog cuts, preliminary schedule indicating mobilization, submittals, material lead times, performance, phasing, etc. The Government may duplicate, use, and disclose in any manner and for any purpose such documentation delivered under this contract.

C.6.5 Time allowed for preparation of Contractor's proposal would depend on the complexity and urgency of the Task Order. The normal time for submittal of the Contractor's proposal will be 5 working days. In emergency

situations, the Government may require quicker response from the Contractor and the proposal due date will be indicated on the Request for Proposal or as otherwise agreed upon by the Contracting Officer and the Contractor.

C.7 REVIEW OF CONTRACTOR PROPOSAL

Upon receipt of the Contractor's proposal, the Government will review the proposal for completeness and reasonableness. The Contracting Officer will arrange with the Contractor to negotiate any elements in question. Upon completion of negotiations, the Contracting Officer will issue a Task Order to the Contractor. The Task Order will include changes to the scope of work (if applicable) as agreed upon in negotiations and the negotiated completion date.

C.8 ISSUANCE OF TASK ORDER

C.8.1 A Task Order is a document (DD Form 1155) prepared by the Contracting Officer that is issued to the Contractor. Task Orders will be issued as necessary and may be modified on Standard Form (SF) 30. Task Orders will be firm fixed-priced with specific completion dates and shall clearly define the specific services to be performed or the performance desired. In the event that the Government and Contractor fail to agree (in whole or in part), on the MEANS line item quantities, or non-pre-priced items, the Government may issue a Firm Fixed-Price Task Order with the Contractor proceeding with the work and seeking resolution, in accordance with the FAR 52.233-1 "DISPUTES" (JUL 2002), ALTERNATE I (DEC 1991) Clause in Section I.

C.8.2 Order of Conflicting Task Order Documents. In the event of any conflict in the written direction provided to the Contractor in the Firm Fixed-Price Task Order documents, precedence will be as follows:

1. Scope of Work
2. Drawings/Sketches
3. Specifications
4. Catalog cuts

C.8.3 The Contractor shall complete all Task Orders by the required completion date agreed to in the negotiations. In accordance with FAR 52.236-2 – Differing Site Conditions - where unforeseen conditions cause delays, the completion date may be extended only as negotiated and modified in the Task Order. Upon Task Order completion and Government acceptance of the work, the Contractor shall complete a final release and submit it with a request for final payment.

C.8.4 Task Order Liquidated Damages

The Government may include liquidated damages on individual Task Orders as determined by the Contracting Officer. If the Contractor fails to complete work within the time specified in the Task Order, the Contractor shall pay liquidated damages to the Government for each calendar day of delay until the work is completed.

The following schedule will be used to calculate Task Order Liquidated Damages Cost Per Calendar Day:

Task Order Amount	Liquidated Damages
up to $25,000	$ 80
$25,000 to $50,000	$110
$50,000 to $100,000	$140
$100,000 to $500,000	$200
Each additional $100,000	add $50

C.8.5 It is the responsibility of the Contractor to notify the Government of any potential errors or omissions from drawings or details of work received, if found.

C.8.6 Record Drawings

Where required in a task order, the Contractor shall keep a careful record at the job site of all changes and corrections from the layouts shown on the drawings. The Contractor shall enter such changes and corrections on contract record drawings and shall indicate, in addition to all changes and corrections, the actual location of all sub-surface utility lines. In order that the location of these lines and appurtenances may be determined in the event the surface openings or indicators become covered over or obscured, the record drawings shall show, by offset dimensions to two permanently fixed surface fixtures, the end of each run, and each change in direction. Valve, splice boxes, and similar appurtenances shall be located by dimensioning along the utility run from a reference point. The average depth below the surface of each run shall also be recorded. At the time of beneficial occupancy of each structure or facility involved under the contract, the Contractor shall submit to the Contracting Officer one set of record drawings (with appropriate title block) showing the aforementioned data, and shall provide a copy of the record drawings file in AutoCAD format. If the Contractor fails to maintain the record drawings as required herein, the Contracting Officer will consider that satisfactory progress has not been achieved for the period in question, hereby requiring the retention of 10% of any payments to be made until such drawings are made correct. Additionally, the estimated cost of maintaining the record drawings will be deducted from any such payments.

C.9 EXECUTION OF WORK

Prior to commencing work under a Task Order, unless otherwise determined unnecessary, Contractor shall schedule a pre-construction conference with the Government Representative. The purpose of the meeting is to develop a mutual understanding relative to the scope of work, safety program, local environmental requirements, quality control procedures, and construction schedule. The Contractor shall confer with the Contracting Officer or the Government Representative and agree on sequence of procedure; means of access to premises and building; space for storage of materials and equipment; delivery of materials and use of approaches; use of corridors, stairways, elevators, means of communications, the location of partitions, and rest rooms for Contractor's employees. The work shall be executed in a manner and at such times that will cause the least practicable disturbance to the occupants of the buildings and normal activities of the station. Before starting any work, the sequence of operations and the methods of conducting the work shall have been approved by the Contracting Officer.

C.9.1 Final Inspection and Acceptance

The Government will perform a final inspection. Any discrepancies noted shall be corrected within the time specified by the Contracting Officer prior to final payment. Notify the Contracting Officer a minimum of five working days prior to the desired final inspection date. The Contracting Officer and Contractor shall mutually agree upon the time and date.

C.9.2 Pre-Final Inspection

The Contractor shall conduct a pre-final inspection prior to requesting a final inspection. Any discrepancies noted shall be reported to the Contracting Officer via the QC Manager and corrected prior to scheduling the final inspection.

C.10 MINIMUM INSURANCE REQUIREMENTS

The Contractor shall furnish a Certificate of Insurance within 15 calendar days after contract award, as evidence of the existence of the following insurance coverage amounts not less than the amount specified below in accordance with Contract Clause “FAR 52.228-5—Insurance—Work on a Government Installation”. This insurance must be maintained during the entire performance period.

C.10.1 Certificate of Insurance

The Certificate of Insurance shall provide for at least 30 calendar days written notice to the Contracting Officer by the insurance company prior to cancellation or material change in policy coverage. Other requirements and information are contained in the aforementioned insurance clause.

C.10.2 Minimum Insurance Amounts

The Contractor shall procure and maintain, during the entire period of performance under this contract, the following minimum insurance coverage:

1. Comprehensive General Liability: $500,000 per occurrence
2. Automobile Liability: $200,000 per person, $500,000 per occurrence for bodily injury, $20,000 per occurrence for property damage
3. Workmen's Compensation: As required by Federal and State workers' compensation and occupational disease laws.
4. Employer's Liability Coverage: $100,000, except in States where workers compensation may not be written by private carriers.
5. Others as required by law.

The above insurance coverage is to extend to Contractor personnel operating Government-owned equipment and vehicles.

C.11 PERFORMANCE GUARANTEE OR BOND REQUIREMENTS

The Contractor shall provide a performance guarantee or payment and performance bonds for the duration of any and all active projects greater than $150,000 or as required by the Contracting Officer. Performance guarantee or payment and performance bonds are returned or relieved at the successful completion of any warranty period in force.

C.12 PARTNERING MEETINGS

To most effectively accomplish the IDIQ Contract as a whole, the Government requires the formation of a cohesive partnership with the Contractor and its key Subcontractors. This partnership is intended to establish a long-term collaborative commitment between the Government and Contractor personnel, referred to hereafter as partners, maximizing the effectiveness of each participant's resources. Key Government personnel, including the Base Public Works Department (PWD) and the designated Contracting Officer's Representative (COR) will be invited to participate in the partnering process. Key members of the IDIQ and Subcontractors teams, including senior management, must participate. The partnership will draw on the strength of each organization in an effort to achieve quality projects done right the first time, within budget, on schedule, and without any safety mishaps.

This contract will utilize NAVFAC's Informal Partnering process, led by the Government's Construction Manager (CM) and the Contractor's Project Manager (PM). A partnering meeting will be held during or following the pre-performance conference, but prior to the start of physical work. In preparation for the partnering meeting, the contract awardee shall meet with the Contracting Officer and key Government personnel to establish the agenda for the Partnering Meeting.

Throughout the contract, the partners shall discuss their relationship and assess the need to conduct follow-on partnering sessions. The purpose of these discussions and sessions shall be to ensure that common objectives are met. Future sessions shall be held by mutual consent of the partners.

C.13 WORK RESTRICTIONS

The specific Task Order Request for Proposal shall identify any project work restrictions, which differ from the restrictions described in the contract. The Contractor's work shall not interfere with normal Government business. In those cases where some interference is unavoidable, the Contractor shall minimize the impact and effects of the interference. The Contractor shall provide advance access of all of its work schedules to the Government. The Contractor shall notify the Contracting Officer of any difficulty in scheduling work due to Government controls.

C.13.1 Contractor Use of Premises

C.13.1.1 Activity Regulations

Ensure that Contractor personnel employed on this contract become familiar with and obey NAVSTA Rota regulations. Keep within the limits of the work and avenues of ingress and egress. Wear hard hats and other required PPE as applicable in designated areas and in compliance with EM-385-1-1. Do not enter any restricted areas unless required to do so and until cleared for such entry. The Contractor's equipment shall be conspicuously marked for identification.

C.13.1.2 Working Hours

The Government's regular working hours are between the hours of 0830 and 1730 five days per week, Monday through Friday, except observed Federal holidays. Exceptions to the regular hours of operation will be stated in individual Task Orders. Work hours not specifically authorized in this basic contract or in a Task Order require approval from the Contracting Officer. The Contractor shall submit a request to the Contracting Officer ten calendar days in advance, or as defined in an individual Task Order, to allow arrangement for a Government inspection of the work in progress.

C.13.1.3 Observed Federal Holidays

The Government observes the following holidays: New Year's Day, Martin Luther King Junior's Birthday, President's Day, Memorial Day, Independence Day, Labor Day, Columbus Day, Veterans' Day, Thanksgiving Day, and Christmas Day.

C.13.1.4 Work Outside Regular Hours

Work, not specifically identified in the Task Order RFP, which is outside regular working hours as identified in C.13.1.2 requires Contracting Officer approval. Submit requests 10 calendar days prior to such work to allow arrangements to be made by the Government for inspecting the work in progress.

C.13.1.5 Occupied Buildings

The Task Order RFP may require the Contractor to work in or around existing building(s), which are occupied. Do not enter the buildings without prior approval of the Contracting Officer. When required by the specific Task Order RFP, the existing buildings and their contents shall be kept secure at all times. Provide temporary closures as required to maintain security as directed by the Contracting Officer. Provide dust covers or protective enclosures to protect existing work that remains and Government material located in existing facilities during the construction period.

C.13.2 Moving Furniture

Furniture and portable office equipment in the immediate area will be moved by the Contractor as required to perform the work, protect the furniture, and replaced to original position. If the work required by the Task Order will not allow furniture and portable office equipment to be replaced to its original position, new locations will be designated by the Contracting Officer for replacement by the Contractor. If the situation does not allow for the moving of office equipment, furniture, etc., the Contractor is required to cover/protect items identified. Leave attached equipment in place, and protect it against damage, or temporarily disconnect, relocate, protect, and reinstall it at the completion of the work. Definitions of items not to be moved and attached equipment shall be communicated prior to project start. Costs associated as a result of the Government requirement shall be identified as a separate, direct cost to the project.

C.13.3 Utility Cutovers and Interruptions

Requests to disrupt service to any roads, railroads, and/or utility services shall be submitted to the Contracting Officer Representative in writing at a minimum of 20 calendar days prior to the desired date of interruption to allow notification of affected tenants and customers. At a minimum, include the location of the outage, utilities being affected, duration of outage and any necessary sketches. The Contractor may have to physically mark the boundaries of the location. Utility cutovers and interruptions after normal working hours or on Saturdays, Sundays, and Government holidays shall conform to procedures required in the paragraph "Work Outside Regular Hours", unless specifically stated otherwise in the Task Order RFP. Interruption to water, sanitary sewer, storm sewer, telephone service, electric service, air conditioning, heating, fire alarm, and compressed air, shall be considered utility cutovers. If the service interruption is due to emergency breakdown, the Contractor shall notify Contracting Officer Representative as soon as practicable. Contractor shall attend the pre-outage coordination meeting(s).

C.13.3.1 Operation of Station Utilities
The Contractor shall not operate or disturb the setting of control devices in the station utilities system, including water, sewer, electrical, and steam services. The Government will operate the control devices as required for normal conduct of the work. The Contractor shall notify the Contracting Officer giving reasonable advance notice when such operation is required.

C.13.3.2 Hazardous Areas
Do not enter into work areas where personnel are using protective equipment such as respirator and masks, areas marked for High Voltage Electricity, or marked boundary areas without prior approval from the Contracting Officer or Government authority designated at Task Order level.

C.13.4 Security Requirements
Any special or extraordinary security requirements which are unique to a specific project (for example, badging requirements for restricted areas) will be included in the requirements of the Task Order RFP as applicable.

C.13.5 Emergency Point Of Contact Information
At the Task Order level, furnish Contractor point of contact information to the Contracting Officer. Include addresses and telephone numbers for use in the event of an emergency at which the representative may be reached 24 hours daily. The Contractor shall notify the Contracting Officer in writing of the telephone number within three calendar days after award of the Task Order and immediately thereafter in the event of change.

C.13.6 Installation Access Badges
Installation access badges will be furnished without reimbursement to the Contractor and his employees. Report lost or stolen badges to the Contracting Officer. Costs associated with identification badges will be included in the Contractor's proposed ELINs. All identification badges must be returned or accounted for to the applicable Pass and Identification Office upon expiration of the badge or contract, or termination of the employees, whichever comes first.

C.14 SCHEDULE
The Contractor shall submit for acceptance a construction schedule in the form of a progress chart. The format of the progress chart (Word, Excel, Etc.) will be determined at the Task Order Level. The schedule shall be adequate for the Contractor to efficiently manage the project and for the Government to efficiently manage the QA and scheduling interfaces. Include construction phasing and any work restrictions (such as occupied spaces, special hours, potential work disruptions). Schedules shall contain dates for completion of each task including material procurement, and construction activities. The IDIQ Task Order will identify if detailed NETWORK ANALYSIS SCHEDULES applies to that Task Order. When a Network Analysis Schedule is required by a specific Task Order, the cost for this scheduling shall be identified as a line item in the Task Order proposal.

The contractor shall be required to submit a progress schedule for each task order within ten (10) calendar days after the Contractor receives the Task Order award. Acceptance of the schedule by the Government is required prior to commencing work. Additionally, the Contractor is required to update the schedule monthly or as otherwise directed.

C.15 HEALTH AND SAFETY

C.15.1 Publications
In addition to references and standards given in this section, the Contractor is responsible for understanding and complying with all Spanish safety standards that govern work in the areas under any Task Order awarded. The publications listed below form a part of this contract to the extent referenced. For the life of the contract, the publication versions that are current at the time of contract award will be used. The publications are referred to within the text by the basic designation only.

AMERICAN NATIONAL STANDARDS INSTITUTE (ANSI)

ANSI Z359.1, *Safety Requirements for Personal Fall Arrest System, Subsystems and Components*
ANSI A10.32, *Fall Protection Systems for Construction and Demolition Operations*
ANSI A10.34, *Protection of the Public on or Adjacent to Construction Sites*
ANSI Z9.2, *Fundamentals Governing the Design and Operation of Local Exhaust Systems*
ANSI Z88.2, *Respiratory Protection*
ANSI Z358.1, *Emergency Eyewash and Shower Equipment*

ASME INTERNATIONAL (ASME)
ASME B30.22, *Articulating Boom Cranes*
ASME B30.3, *Construction Tower Cranes*
ASME B30.5, *Mobile and Locomotive Cranes*
ASME B30.8, *Floating Cranes and Floating Derricks*

NATIONAL FIRE PROTECTION ASSOCIATION (NFPA)
NFPA 241, *Safeguarding Construction, Alteration, and Demolition Operations*
NFPA 51B, *Fire Prevention During Welding, Cutting, and Other Hot Work*
NFPA 70, *National Electrical Code*
NFPA 70E, *Electrical Safety in the Workplace*

U.S. ARMY CORPS OF ENGINEERS (USACE)
EM 385-1-1, Safety -- *Safety and Health Requirements*

U.S. NATIONAL ARCHIVES AND RECORDS ADMINISTRATION (NARA)
29 CFR 1910, *Occupational Safety and Health Standards*
29 CFR 1910.146, *Permit-required Confined Spaces*
29 CFR 1915, *Occupational Safety and Health Standards for Shipyard Employment*
29 CFR 1926, Safety and Health Regulations for Construction

JEFATURA DEL ESTADO (JE)
Ley 31/1995 (1995) Prevención de Riesgos Laborales

MINISTERIO DE LA PRESIDENCIA (MP)
RD 1627 (1997) Disposiciones Mínimas de Seguridad y de Salud en las obras de construcción.
Orden TIN/1071/2010 (2010) Comunicación De Apertura. Del Centro De Trabajo En Las. Obras De Construcción
R.D.1109/2007 (2007) Subcontratación en el Sector de la Construcción

C.15.2 Definitions

1. Certified Construction Health & Safety Technician (CHST). An individual who is currently certified as a CHST by the Board of Certified Safety Professionals.

2. Certified Industrial Hygienist (CIH). An individual who is currently certified as a CIH by the American Board of Industrial Hygiene.

3. Certified Safety Professional (CSP). An individual who is currently certified as a CSP by the Board of Certified Safety Professionals.

4. Certified Safety Trained Supervisor (STS). An individual who is currently certified as an STS by the Board of Certified Safety Professionals.

5. Competent Person. A person who is capable of identifying or predicting hazards or hazardous conditions and has the authority to take prompt corrective measures to eliminate them. The competent person assists writing the AHA and signs it if the phase of work requires a particular competent person (e.g., fall protection, excavation/trenching, scaffolding).

6. Competent Person for Fall Protection. A person designated in writing by the employer to be responsible for the immediate supervision, implementation and monitoring of the fall protection program, who through training, knowledge and experience in fall protection and rescue systems and equipment, is capable of identifying, evaluating, and addressing existing and potential fall hazards and, who has the authority to take prompt corrective measures with regard to such hazards.

7. Contractor. The term Contractor as used herein refers to both the prime Contractor and any Subcontractors. The Contractor shall ensure that subcontractors comply with the provisions of this contract.

8. Contractor Representative. A supervisor, superintendent, or manager assigned in accordance with the clause entitled SUPERINTENDENCE BY THE CONTRACTOR.

9. Government-Furnished Property (GFP): Government-furnished property includes all property in the possession of, or directly acquired by, the Government and subsequently made available to the Contractor.

10. Government Representative: Person(s) designated by the Contracting Officer to be the authorized representative.

11. High Visibility Accident. Any mishap which may generate publicity and/or high visibility.

12. Medical Treatment. Treatment administered by a physician or by registered professional personnel under the standing orders of a physician. Medical treatment does not include first aid treatment even through provided by a physician or registered personnel.

13. Operating Envelope. The area surrounding any crane. Inside this "envelope" is the crane, the operator, riggers and crane walkers, rigging gear between the hook and the load, the load and the crane's supporting structure (ground, rail, etc.).

14. Quality Assurance (QA): A method used by the Government, to provide some measures of control over the quality of purchased goods and/or services received.

15. Quality Assurance Evaluator (QAE): Representative of the Contracting Officer who performs quality assurance evaluations of the Contractor's performance.

16. Quality Control: A method used by the Contractor, to control quality of goods and/or services produced.

17. Qualified Person. One who, by possession of a recognized degree, certificate, or professional standing and has extensive knowledge, training, and experience and has successfully demonstrated his/her ability to solve or resolve problems related to the subject matter, work, or the project.

18. Qualified Person for Fall Protection. A person with a recognized degree or professional certificate, and with extensive knowledge, training and experience in the fall protection and rescue field who is capable of designing, analyzing, evaluating and specifying fall protection and rescue systems.

19. Task Order: A task order is a document (DD Form 1155) prepared by the Contracting and/or Ordering Officer that are issued to the Contractor for work to be performed. Task orders issued may be modified.

20. Where "as directed", "as required", "as permitted", "approved", "acceptance", or words of similar importance are used, it shall be understood direction, requirement, permission, approval or acceptance of the Contracting Officer is intended unless specified otherwise.

21. Where "as shown", "as indicated", "as detailed" or words of similar importance are used, it shall be understood that reference is made to drawings accompanying the technical specifications unless specified otherwise.

22. Where "maintain" is used in Section C., it shall be understood that the Contractor shall perform at the level of effort necessary to upkeep the standards specified.

C.15.3 Weight Handling Equipment (WHE) Accident

The Contractor shall report all Weight Handling Equipment Accidents to the Administrative Contracting Officer. A WHE accident occurs when any one or more of the six elements in the operating envelope fails to perform correctly during operation, including operation during maintenance or testing resulting in personnel injury or death; material or equipment damage; dropped load; derailment; two-blocking; overload; or collision, including unplanned contact between the load, crane, or other objects. A dropped load, derailment, two-blocking, overload and collision are considered accidents even though no material damage or injury occur. A component failure (e.g., motor burnout, gear tooth failure, bearing failure) is not considered an accident solely due to material or equipment damage unless the component failure results in damage to other components (e.g., dropped boom, dropped load, roll over).

C.15.4 Contractor Safety Self-Evaluation Checklist

The Contracting Officer will provide a "Contractor Safety Self-Evaluation Checklist" to the Contractor. In return, the Contractor shall complete the checklist month and with every request for payment. A score of 90 or greater is required. Failure to submit the completed safety self-evaluation checklist or achieve a score of at least 90 will result in retention of up to 10 percent of the voucher.

C.15.5 Regulatory Requirements

In addition to the detailed requirements included in this contract, work performed shall comply with USACE EM 385-1-1, *Safety and Health Requirements Manual*, and the laws, ordinances, criteria, rules and regulations as specified in the contract and subsequent Task Orders. Submit matters of interpretation of standards to the appropriate administrative agency for resolution before starting work. Where the requirements of this specification, applicable laws, criteria, ordinances, regulations, and referenced documents vary, the most stringent requirements shall apply.

C.15.6 Site Safety and Health Officer (SSHO) Qualifications & Duties

SSHO shall perform safety and occupational health management, surveillance, inspections, and safety enforcement for the Contractor. The assignment of the SSHO does not relieve the Contractor from the regulatory requirements governing safety responsibility. A SSHO or designated representative as identified in the Accident Prevention Plan/Activity Hazard Analysis (APP/AHA) and as deemed appropriate/equivalent to SSHO shall be on-site at all times when work is being performed. The SSHO shall meet the following requirements:

1. A minimum of 5 years safety work on similar projects.
2. 30-hour OSHA construction safety class or equivalent within the last 5 years.
3. An average of at least 24 hours of formal safety and health coursework every four years.
4. Competent person training as needed.
5. Successfully completed the Environmental Compliance Awareness Training (ECATT) Program.
6. In addition to duties required in EM 385-1-1, perform the following:

a. Conduct daily safety and health inspections and maintain a written log which includes area/operation inspected, date of inspection, identified hazards, recommended corrective actions, estimated and actual dates of corrections. Attach safety inspection logs to the daily production report.
b. Attend pre-construction conference, pre-work meetings including preparatory inspection meeting, and periodic progress meetings
c. Implement and enforce accepted APP s and AHAs.
d. Maintain a safety and health deficiency tracking system that monitors outstanding deficiencies until resolution. A list of unresolved safety and health deficiencies shall be posted on the safety bulletin board.
e. Ensure Subcontractor compliance with safety and health requirements.
Failure to actively apply an acceptable safety program will result in dismissal and a project work stoppage that will remain in effect pending approval of a suitable replacement.

C.15.7 Task Order SSHO

A Task Order SSHO is identified in the AHA and as deemed appropriate/equivalent to SSHO shall be on-site at all times when work is being performed. The site superintendent meeting the qualifications described below may perform the duties of Task Order SSHO. The Task Order SSHO shall meet the following requirements:

1. Journeyman Level experience in work being preformed.
2. 30-hour OSHA construction safety class or equivalent within the last 5 years.
3. Competent person training as needed.
4. Successfully completed the Environmental Compliance Awareness Training (ECATT) Program.
5. In addition to duties required in EM 385-1-1, perform the following:
   a. Conduct daily safety and health inspections and maintain a written log which includes area/operation inspected, date of inspection, identified hazards, recommended corrective actions, estimated and actual dates of corrections. Attach safety inspection logs to the daily production report.
   b. Implement and enforce accepted APP s and AHAs.
   c. Maintain a safety and health deficiency tracking system that monitors outstanding deficiencies until resolution. A list of unresolved safety and health deficiencies shall be posted on the safety bulletin board.
   d. Ensure Subcontractor compliance with safety and health requirements.

Failure to actively apply an acceptable safety program will result in dismissal of the Task Order SSHO and a project work stoppage that will remain in effect pending approval of a suitable replacement.

C.15.7.1 Certified Safety Professional (CSP) and/or Certified Industrial hygienist (CIH)

Provide a Certified Safety Professional (CSP) and/or Certified Industrial Hygienist (CIH) at the work site to perform safety and occupational health management, surveillance, inspections, and safety enforcement for the Contractor if required by specific Task Orders. When specifically required by a Task Order RFP, the costs for these CSP/CIH personnel shall be identified as a line item on the cost proposal. When required, the CSP and/or CIH shall be the safety and occupational health "competent person" as defined by USACE EM 385-1-1, *Safety and Health Requirements Manual*. The CSP and/or CIH shall have no other duties than safety and occupational health management, inspections, and/or industrial hygiene.

C.15.8 Competent Person for Confined Space Entry

When confined spaces are identified in the Task Order Request for Proposal, the Contractor must provide a competent person to manage the confined space entry. This individual must meet the definition and requirements of Section 34 and Appendix Q of EM 385-1-1.

Should the work involve marine operations that handle combustible or hazardous materials, this person shall be a NFPA certified marine chemist. This is a unique Task Order Requirement that shall be priced separately and is not to be included in the Contractor's unit price.

C.15.9 Crane Operators

Crane operators shall meet the requirements in USACE EM 385-1-1, *Safety and Health Requirements Manual* Section 16 and Appendix G. In addition, for mobile cranes with Original Equipment Manufacturer (OEM) rated capacitates of 2,000 pounds or greater, crane operators shall be designated as qualified by a source that qualifies crane operators (i.e., union, a Government agency, or an organization that tests and qualifies crane operators). Proof of Qualifications for Crane Operator(s) shall be provided as required per individual task order.

C.15.10 Accident Prevention Plan (APP)

C.15.10.1 General Accident Prevent Plan

The Contractor is required to submit to the Contracting Officer a General Accident Prevention Plan 17 days after contract award. A project specific plan will be required for individual Task Orders. The Contractor shall use a qualified person to prepare the written site-specific General APP. Prepare the APP in accordance with the format and requirements of USACE EM 385-1-1, *Safety and Health Requirements Manual,* and as supplemented herein. Cover all paragraph and subparagraph elements in USACE EM 385-1-1, *Safety and Health Requirements Manual,* Appendix A, "Minimum Basic Outline for Accident Prevention Plan". Specific requirements for some of the APP elements are:

- The Prime Contractor is the "controlling authority" for all work site safety and health of the Subcontractors.

- The Prime Contractor is responsible for informing its Subcontractors of the contract safety provisions and the penalties for noncompliance.

- The Prime Contractor is responsible for coordinating the work to prevent one craft from interfering with or creating hazardous working conditions for other crafts, and inspecting Subcontractor operations to ensure that accident prevention responsibilities are being carried out.

- Unless otherwise specifically requested, the APP shall be signed by the person and firm (senior person) preparing the APP. The on-site superintendent, the designated site safety and health officer and any designated CSP and/or CIH are qualified for this role.

- Submit the APP to the Contracting Officer twenty calendar days prior to the date of the preconstruction conference for acceptance. Work cannot proceed without an accepted APP.

- Once accepted by the Contracting Officer, the APP and attachments will be enforced as part of the contract. Disregarding the provisions of this contract or the accepted APP will be cause for stopping of work, until the matter has been satisfactorily resolved.

- Once work begins, changes to the accepted APP shall be made with the knowledge and concurrence of the Contracting Officer, project superintendent, SSHO and quality control manager. Should any hazard become evident, stop work in the area, secure the area, and develop a plan to remove the hazard. Notify the Contracting Officer within 24 hours of discovery. Eliminate/remove the hazard. In the interim, all necessary action shall be taken to restore and maintain safe working conditions in order to safeguard onsite personnel, visitors, the public (as defined by American National Standards Institution/American Society of Safety Engineers (ANSI/ASSE) A10.34,) and the environment.

- Copies of the accepted plan will be maintained by the Contractor at the job site and by the Contracting Officer.

- The APP shall be continuously reviewed and amended, as necessary, throughout the life of the contract. Unusual or high-hazard activities not identified in the original APP shall be incorporated in the plan as they are discovered.

C.15.10.2 EM 385-1-1 Contents

In addition to the minimum requirements for an Accident Prevention Plan outlined in Appendix A of USACE EM 385-1-1, *Safety and Health Requirements Manual*, the following is required to be included:

1. Names and qualifications: Resumes including education, training, experience and certifications of all site safety and health personnel designated to perform work on this project to include the designated site safety and health officer and other competent and qualified personnel to be used such as CSPs, CIHs, STSs, and CHSTs. The duties of each position shall be specified. Resumes shall be submitted 20 calendar days after contract award.

2. Qualifications of Competent and of Qualified Persons: Competent or Qualified person(s) qualifying skills statement(s) shall be kept at the project site available for Government Designated Authority review. The competent person(s) and qualified person(s) shall be designated in writing. The qualifying factors for either designation shall be submitted for any of the following major construction activities prior to its occurrence: excavation; scaffolding; fall protection; hazardous energy; confined space; health hazard recognition, evaluation and control of chemical, physical, and biological agents; personal protective equipment and clothing to include selection, use and maintenance. Qualifications shall be submitted 20 calendar days after contract award.

3. Confined Space Entry Plan: Develop a confined space entry plan in accordance with USACE EM 385-1-1, *Safety and Health Requirements Manual*, applicable OSHA standards 29 CFR 1910, *Occupational Safety and Health Standards*, 29 CFR 1915, *Occupational Safety and Health Standards for Shipyard Employment*, and 29 CFR 1926, *Occupational Safety and Health Standards for Construction*, and any other federal, state and local regulatory requirements identified in this contract. Identify the qualified person's name and qualifications, training, and experience. Delineate the qualified person's authority to direct work stoppage in the event of hazardous conditions. Include procedure for rescue by Contractor personnel and the coordination with emergency responders. (If there is no confined space work, include a statement that no confined space work exists and none will be created.) The Plan shall be submitted 20 calendar days after contract award.

4. Crane Critical Lift Plan: Prepare and sign weight handling critical lift plans for lifts over 75 percent of the capacity of the crane or hoist (or lifts over 50 percent of the capacity of a barge mounted mobile crane's hoists) at any radius of lift; lifts involving more than one crane or hoist; lifts of personnel; and lifts involving non-routine rigging or operation, sensitive equipment, or unusual safety risks. The plan shall be submitted 15 calendar days prior to on-site work for each applicable task order. The plan shall include the requirements of USACE EM 385-1-1, *Safety and Health Requirements Manual*, paragraph 16.H and the following:

    a. For lifts of personnel, the plan shall demonstrate compliance with the requirements of 29 CFR 1926.550(g).

    b. For barge mounted mobile cranes, barge stability calculations identifying barge list and trim based on anticipated loading; and load charts based on calculated list and trim. The amount of list and trim shall be within the crane manufacturer's requirements.

5. Fall Protection and Prevention (FP&P) Plan: The Contractor shall create a plan that is site specific and addresses all fall hazards in the work place during the different construction phases of work. It shall address how to protect and prevent workers from falling to lower levels when they are exposed to fall hazards above 1.8 m (6 feet). A qualified person for fall protection shall prepare and sign the plan. The plan shall include fall protection and prevention systems, equipment and methods employed for every phase of work, responsibilities, assisted rescue, self-rescue and evacuation procedures, training requirements, and monitoring methods. Fall Protection and Prevention Plan shall be revised every six months for lengthy projects, reflecting any changes during the course of construction due to changes in personnel, equipment, systems or work habits. The accepted Fall Protection and Prevention Plan shall be kept and maintained at the job site for the duration of the project. The Fall Protection and Prevention Plan and all associated AHAs shall be part of the Fall Hazard Protection and Prevention Program.

C.15.11 Task Order Specific Accident Prevent Plan
For each Task Order, prepare an APP in accordance with USACE EM 385-1-1, *Safety and Health Requirements Manual*, Appendix A, "Minimum Basic Outline for Accident Prevention Plan" and as modified herein. The Task Order APP shall be job-specific and shall address any unusual or unique aspects of the project or activity for which it is written, and which are not addressed in the approved General APP. The APP shall interface with the Contractor's overall safety and health program.

C.15.12 Activity hazard analysis (AHA*)*
The Activity Hazard Analysis (AHA) format shall be in accordance with USACE EM 385-1-1, *Safety and Health Requirements Manual*, figure 1-2. Subsequent AHAs shall be prepared as amendments to the APP. The analysis should be used during daily inspections to ensure the implementation and effectiveness of the activity's safety and health controls. The appropriate/equivalent Task Order SSHO is identified in the AHA. AHAs are to be submitted 7 working days prior to on-site work for each phase of every task order.

C.15.13 Display of safety information
Within one calendar day after commencement of work, erect a safety bulletin board at the job site.

Display the following information in clear view of the on-site construction personnel:

a. A map denoting the route to the nearest emergency care facility.

b. Emergency phone numbers.

c. A copy of the most up-to-date Accident Prevention Plan (APP) shall be mounted on or adjacent to the bulletin board, or a notice on the bulletin board shall state the location of the APP. The location of the APP shall be accessible on the site by all workers.

d. A copy of the current Activity Hazard Analysis/analyses (AHA) shall be mounted on or adjacent to the bulletin board, or a notice on the bulletin board should state the location of the AHAs. The location of the AHAs shall be accessible on the site by all workers.

e. The Occupational Safety and Health Administration (OSHA) Form 300A, Summary of Work Related Injuries and Illnesses, shall be posted, in accordance with OSHA requirements, from February 1 to April 30 of the year following the issuance of this (not required) form. It shall be mounted on or adjacent to the bulletin board, which shall be accessible on the site by all workers.

f. A copy of the Safety and Occupational Health deficiency tracking log shall be mounted on or be adjacent to the bulletin board or a notice on the bulletin board shall state the location where it may be accessed by all workers upon request (See 01.A.12.d).

g. Safety and Health promotional posters.

h. Date of last lost workday injury.

i. OSHA Safety and Health Poster.

j. A copy of the hazardous material inventory, identification of use, approximate quantities and site map detailing location as required by and IAW 06.B.01.a (2)-(4).

k. Confined space entry permit

l. Hot work permit.

C.15.14 Emergency Medical Treatment

Contractors will arrange for their own emergency medical treatment. The Government has no responsibility to provide emergency medical treatment. When on-site emergency response is required to be provided by the Government, the Contractor may be required to reimburse the Government.

C.15.15 Accident Notification and Reports

1. For recordable injuries and illnesses, and property damage accidents resulting in at least $20,000 in damages, the Prime Contractor shall conduct an accident investigation to establish the root cause(s) of the accident, complete the report in the Contractor Incident Reporting System (CIRS) on line. A temporary log-in ID and password will be given by the Contracting officer as required and the report must be completed within five (5) days. The Contracting Officer will provide copies of any required or special forms and access to the system as required.

2. For any weight handling equipment accident (including rigging gear accidents), the Prime Contractor shall conduct an accident investigation to establish the root cause(s) of the accident, complete the WHE Accident Report (Crane and Rigging Gear) form and provide the report. The WHE Accident Report shall be submitted to the Contracting Officer within 30 calendar days of the accident. Crane operations shall not proceed until cause is determined and corrective actions have been implemented to the satisfaction of the contracting officer. The Contracting Officer will provide a blank copy of the accident report form.

3. Notify the Contracting Officer as soon as practical, but not later than four hours, after any accident meeting the definition of Recordable Injuries or Illnesses or High Visibility Accidents, property damage equal to or greater than $2,000, or any weight handling equipment accident. Include Contractor name; contract title; type of contract; name of activity, installation or location where accident occurred; date and time of accident; names of personnel injured; extent of property damage, if any; extent of injury, if known, and brief description of accident (e.g., type of construction equipment used, PPE used). Preserve the conditions and evidence on accident site until the Government investigation team arrives and Government investigation is conducted.

C.15.16 Hot Work

Prior to performing "Hot Work" (e.g., welding, cutting) or operating other flame-producing/ spark-producing devices, request a written permit from the Fire Division. CONTRACTORS ARE REQUIRED TO MEET ALL CRITERIA BEFORE A PERMIT IS ISSUED. Criteria shall be defined as that meeting industry standard for the work being performed. It is mandatory to have a designated FIRE WATCH for any "Hot Work". The Fire Watch shall be trained in accordance with National Fire Protection Association (NFPA) 51B and remain on site for a minimum of 1 hour or as required after completion of the task or as specified on the hot work permit.

C.15.17 Hazardous Material Use

Each hazardous material must receive approval from the ACO or other designated authority prior to being brought onto the job site or prior to any other use in connection with this contract. Allow a minimum of 10 working days for processing of the request for use of a hazardous material. Hazardous material will be screened for the following prohibited constituents:

- Asbestos
- Acrylonitrile
- Arsenic
- Benzene
- Beryllium
- Cadmium
- Chrome VI (hexavalent chromium)
- Formaldehyde
- Isocyanates
- Mercury
- Methylene chloride
- Lead
- Polychlorinated biphenyls (PCBs)
- Vinyl chloride
- Carcinogen's in amounts greater than 0.1%
- Chemical substances or mixtures subject to an order under 15 U.S.§ 2606.
- Toxic water pollutants defined in 33 U.S.C. § 502 (13) and regulated under 33 U.S.C. § 1317.
- Hazardous air pollutants regulated under 42 U.S.C. § 112.
- Extremely hazardous substances described in 42 U.S.C. § 11002(a)(2).

If flammable liquids (flashpoint 200 F or above) are to be stored on site, provide a flammable liquid storage cabinet in compliance with specifications of NFPA 30, Chapter 14. The Contractor may be required to Register hazardous material storage units (e.g. provide a Point of Contact) and allow the temporary application of additional provided signs or forms if required by local instructions.

Notwithstanding any other hazardous material used in this contract, radioactive materials or instruments capable of producing ionizing/non-ionizing radiation (with the exception of radioactive material and devices used in accordance with USACE EM 385-1-1, *Safety and Health Requirements Manual*, such as nuclear density meters for compaction testing and laboratory equipment with radioactive sources) as well as materials which contain asbestos, mercury, PCBs, diisocynates, or lead-based paint are prohibited. The Contracting Officer, upon written request by the Contractor, may consider exceptions to the use of any of the above excluded materials.

The Task Order Request for Proposal should identify materials such as PCB, lead paint, and friable and non-friable asbestos. If the Contractor disturbs material not previously identified in the Task Order RFP, which may be hazardous to human health during construction operations, the Contractor must stop that portion of work and notify the Contracting Officer immediately. Within 14 calendar days the Government will determine if the material is hazardous. If material is not hazardous or poses no danger, the Government will direct the Contractor to proceed without change. If the material is hazardous and handling of the material is necessary to accomplish the work, the Government will make a determination regarding cleanup of hazardous material and notify the Contractor of impact to project via Task Order modification pursuant to FAR 52.243-4, *Changes*, or FAR 52.236-2, *Differing Site Conditions*.

C.15.18 Pre-outage Coordination Meeting

Prior to beginning work on the utility system requiring shut down, attend a pre-outage coordination meeting with the Contracting Officer or authorized Government representative to review the scope of work and the lock-out/tag-out procedures for worker protection. No work will be performed on energized electrical circuits unless the Contractor can show that the work can be performed safely and no other methods are available to accomplish the task.

C.15.19 Fall Hazard Protection and Prevention Program
Establish a fall protection and prevention program, for the protection of all employees exposed to fall hazards. Include company policy; identify responsibilities, education and training requirements, fall hazard identification, prevention and control measures, inspection, storage, care and maintenance of fall protection equipment and rescue and evacuation procedures.

C.15.20 Fall Protection for Roofing Work
Implement all protection controls based on the type of roof being constructed and work being performed. Evaluate the roof area to be accessed for its structural integrity including weight-bearing capabilities for the projected loading.

1. A safety monitoring system is not adequate fall protection for low sloped roofs and is not authorized.
2. Work on steep-sloped roofs, including residential or housing type construction, requires a personal fall arrest system, guardrails with toe-boards, and safety nets.

C.15.21 Weight Handling Equipment

1. Provide a Certificate of Compliance for each crane and Multi-Purpose Machine, Material Handling Equipment (Forklifts), and construction equipment when used as cranes to lift suspended loads entering an activity under this contract (see Contracting Officer for a blank certificate). Certificate shall state that the WHE and rigging gear meet applicable OSHA regulations (with the Contractor citing which OSHA regulations are applicable, e.g., WHE used in construction, demolition, or maintenance shall comply with 29 CFR 1926, *Occupational Safety and Health Standards for Construction*, and USACE EM 385-1-1, *Safety and Health Requirements Manual*, section 16. The Certificate of Compliance shall state that the WHE operator(s) is qualified and trained in the operation of the WHE to be used. Also certify that all of its WHE operators working on the DOD activity have been trained in the proper use of all safety devices (e.g., anti-two block devices). Post these certifications on the crane.

2. Notify the Contracting Officer 15 calendar days in advance of any WHE entering the activity so that necessary quality assurance spot checks can be coordinated. Contractor's operator shall remain with the crane during the spot check.

3. Comply with the manufacturer's specifications and limitations for erection and operation of cranes and hoists used in support of the work. Perform erection under the supervision of a designated person (as defined in ASME B30.5). Perform all testing in accordance with the manufacturer's recommended procedures.

4. Comply with ASME B30.5 for mobile and locomotive cranes, ASME B30.22 for articulating boom cranes, ASME B30.3 for construction tower cranes, and ASME B30.8 for floating cranes and floating derricks.

5. Under no circumstance make a lift at or above 90% of the WHE's rated capacity in any configuration.

6. When operating in the vicinity of overhead transmission lines, operators and riggers shall be alert to this special hazard and shall follow the requirements of USACE EM 385-1-1, *Safety and Health Requirements Manual*, section 11 and ASME B30.5 or ASME B30.22 as applicable.

7. Use cribbing when performing lifts on outriggers.

8. Position the WHE hook/block directly over the load. Side loading of the crane is prohibited.

9. Certification records which include the date of inspection, signature of the person performing the inspection, and the serial number or other identifier of the crane that was inspected shall be available for review by Contracting Officer personnel.

10. Written reports listing the load test procedures used along with any repairs or alterations performed on the crane shall be available for review by Contracting Officer personnel.

11. Certify that all WHE operators have been trained in proper use of all safety devices (e.g. anti-two block devices).

12. Take steps to ensure that wind speed does not contribute to loss of control of the load during lifting operations. Prior to conducting lifting operations, set a maximum wind speed at which a crane can be safely operated based on the equipment being used, the load being lifted, experience of operators and riggers, and hazards on the work site. Include this maximum wind speed determination in the activity hazard analysis plan for that operation.

C.15.22Utility Locations and Verification Prior to Excavation
Obtain appropriate digging permit from Base personnel through the Administrative Contracting Officer's designated Technical Representative prior to digging. All underground utilities in the work area must be positively identified by a private utility locating service in addition to any station locating service and coordinated with the station utility department. Maintain all markings during utility investigation throughout the contract.

Physically verify underground utility locations by hand digging using wood or fiberglass handled tools when any adjacent construction work is expected to come within three feet of the underground system. Use hand digging within 0.61 m (2 feet) of a known utility. If construction is parallel to an existing utility, expose the utility by hand digging every 30.5 m (100 feet) if parallel within 1.5 m (5 feet) of the excavation. Excavation work is defined as digging, saw-cutting, or core drilling of all vertical and horizontal surfaces to include building interiors.

C.15.23 Utilities Within Concrete Slabs
Utilities located within concrete slabs are extremely difficult to identify due to the reinforcing steel used in the construction of these structures. Whenever work involves concrete chipping, saw cutting, or core drilling, the existing utility location must be coordinated with station utility departments in addition to a private locating service. Outages to isolate utility systems shall be used in circumstances where utilities are unable to be positively identified. The use of historical drawings does not alleviate the Contractor from meeting this requirement.

C.15.24 Notification Prior To Excavation
Notify the Contracting Officer at least 48 hours prior to starting excavation work.

C.15.25 Notification Prior To Excavation
Contractor shall be aware that hazardous materials may be present in existing facilities. Where known, provisions for removal and handling of hazardous materials shall be included in task orders. Contractor shall be alert to discovery of materials such as asbestos, PCB's, mercury, and lead containing paint during performance of work. Should unforeseen hazardous materials be discovered stop affected work and obtain instructions from the Contracting Officer.

C.15.26 Lead Containing Paint
Assume all paint on metal and wood is lead containing unless contractor provides testing to prove otherwise. Removal of materials will require protecting workers, the surrounding areas, and adjacent building occupants from lead exposure. Follow applicable regulations including those issued by the Instituto Nacional De Seguridad y Higiene en el Trabajo. At the minimum to prevent over-exposure to lead the contractor shall not weld, grind, sand, or burn any lead coated material or otherwise cause dust or fumes. Use wet techniques for demolition and removal. Provide employee

training, respirators, personal protective equipment, and personal air sampling where activities generate lead-containing dust.

C.15.27 Building and Site Storm Protection
When a warning of gale force winds is issued, take precautions to minimize danger to persons, and protect the work and nearby Government property. Precautions shall include, but are not limited to, closing openings; removing loose materials, tools and equipment from exposed locations; and removing or securing scaffolding and other temporary work. Close openings in the work when storms of lesser intensity pose a threat to the work or any nearby Government property.

C.15.28 Grass Cutting
Cut grass (or annual weeds) within the construction and storage sites to a maximum 4-inch height at least once a week during the growing season. Trim the grass around fences at time of grass cutting. Maintain grass or weeds on stockpiled earth as descried above.

C.15.29 Conduct of Electrical Work
Follow electrical safety criteria specified in USACE EM 385-1-1, *Safety and Health Requirements Manual*, and NFPA 70E, *Standard for Electrical Safety in the Workplace*, during the conduct of all work.

OSHA Approved Certification – The equipment installation and its component parts shall be in compliance with the applicable OSHA regulations in accordance with CFR Title 29, Chapter XVII, Part 1910 and installed in accordance with NEC/NFPA requirements. Approval shall be as specified under the "Approval" and "Acceptance" criteria in the OSHA regulations Subpart "O", Machinery and Machine Guarding paragraph 1910.212 and Subpart "S" Electrical, paragraph 1910.303 and paragraph 1910.399. After equipment delivery and installation, and prior to testing, the Contractor shall provide an OSHA Certification Report. Failure to provide this certification report will delay acceptance of the equipment, and could result in rejection for failure to comply with the terms of the contract. This report documents the results of all tests performed, provides an assessment of the equipment performance for compliance with the contract requirements, and forms a basis for recommending a safety certification. The report, test and evaluation shall be a composite of those inspection requirements specified in the contract. The report shall be prepared in an orderly manner to clearly and accurately set forth the collected data and conclusion resulting from these inspection requirements, opinions and subjective conclusions shall be clearly identified. The report shall include, but is not limited to, the following:

1. List of all tests performed and by whom witnessed.
2. List of data used for evaluation.
3. Tabulation of all discrepancies related to specification performance requirements.
4. Description of limitations revealed by data utilized.
5. Actions taken to mitigate each discrepancy and limitation.
6. Recommendations for subsequent actions.
7. Summary conclusions.

Manufacturer Certification that equipment has been manufactured and installed to OSHA CFR 1910.399 (per definition of "acceptable").

C.15.30 Work in Confined Spaces
In addition to the requirements of Section 34 of USACE EM 385-1-1, *Safety and Health Requirements Manual*, OSHA 29 CFR 1910.146, *Permit Requirements for Confined Space*, and OSHA 29 CFR 1926.21(b)(6), *Safety Training and Education (Confined Space)*, comply with the following paragraphs. Any potential for a hazard in the confined space requires a permit system to be used.

1. <u>Confined Space Signage</u>: Provide permanent signs integral to or securely attached to access

covers for permit-required confined spaces provided by this contract. Signs wording: "DANGER--PERMIT-REQUIRED CONFINED SPACE - DO NOT ENTER -" in bold letters a minimum of 25 mm (one inch) in height and constructed to be clearly legible with all paint removed. The signal word "DANGER" shall be red and readable from 1.52 m (5 feet).

2. Entry Procedures: Prohibit entry into a confined space by personnel for any purpose, including hot work, until the qualified person has conducted appropriate tests to ensure and document that the confined or enclosed space is safe for the work intended and all potential hazards are controlled or eliminated. (See Section 06.I.06 of USACE EM 385-1-1, *Safety and Health Requirements Manual*, for entry procedures.) Review all hazards pertaining to the space with each employee during AHA process.

3. Forced air ventilation is required for all confined space entry operations. Maintain minimum air exchange requirements to ensure exposure to any hazardous atmosphere is kept below its' action level.

4. Sewer wet wells require continuous atmosphere monitoring with audible alarm for toxic gas detection.

C.15.31 Radiation Safety Requirements

License Certificates for radiation materials and equipment shall be submitted to the Contracting Officer, Radiation Safety Officer and Contracting Oversight Technician (COT) for all specialized and licensed material and equipment that could cause fatal harm to construction personnel or to the construction project. Requirements shall be submitted by the contractor at least 15 days prior to commencement of operations involving radioactive materials or radiation generating devices. Ensure required submittals are forwarded to the COT for review and acceptance. No operations involving radioactive materials or radiation generating devices commence without the COT's written acceptance.

Workers shall be protected from radiation exposure in accordance with 10 CFR 20. Standards for Protection against Radiation Loss of radioactive material shall be reported immediately to the Contracting Officer.

Actual exposure of the radiographic film or unshielding the source shall not be initiated until after 5 p.m. on weekdays.

In instances where radiography is scheduled near or adjacent to buildings or areas having limited access or one-way doors, no assumptions shall be made as to building occupancy. Where necessary, the Contracting Officer will direct the Contractor to conduct an actual building entry, search, and alert. Where removal of personnel from such a building cannot be accomplished and it is otherwise safe to proceed with the radiography, a fully instructed employee shall be positioned inside such building or area to prevent exiting while external radiographic operations are in process. Transportation of Regulated Amounts of Radioactive Material will comply with 49 CFR, Subchapter C, Hazardous Material Regulations. Local Fire authorities, the site Radiation Safety officer (RSO) and Contracting Oversight Technician (COT) shall be notified of any Radioactive Material use.

Transmitter Requirements: The base policy concerning the use of transmitters such as radios, cell phones, etc., must be adhered to by all contractor personnel. They must also obey Emissions control (EMCON) restrictions.

C.16 QUALITY MANAGEMENT

The Quality Management program is a concerted effort of the Contractor and Government personnel to ensure that quality standards are met under contract terms. Quality Management consists of two parts: Quality Control (QC), established and directed by the Contractor, and Quality Assurance (QA), the Government's program to maximize project quality elements. The Contractor's QC organization for each Task Order shall include a QC Manager and any QC Specialists that are specified in the Task Order RFP. Costs for the QC Manager shall be included in the Contractor's unit price. Costs for the QC Specialists required by a specific Task Order shall be attributed to that Task Order and are not covered by the ELINs.

The Contractor shall establish and maintain an inspection system in accordance with the FAR Clause 52.246-12, INSPECTION OF CONSTRUCTION, to ensure that the work performed conforms to the contract requirements. Submit a General IDIQ Construction Quality Control plan for Government review and acceptance within 30 days after contract award. Submit a Task Order Specific Quality Control Plan for every Task Order within 15 days after task order award. Construction work on a Task Order will not be allowed until the Task Order Specific QC Plan is accepted by a designated Government authority.

The Contractor shall maintain a file of all scheduled and performed QC inspections, inspection results, and dates and details of corrective and preventive actions. The file shall be the property of the Government and made available during the Government's regular working hours. The general IDIQ Construction QC plan shall be submitted in a 3-ring binder with one electronic copy that covers the overarching QC procedures that are instituted for all Task Orders under this contract. The General QC plan shall include the following:

QC Manager Responsibilities:

1. Participate in the Project Kick-off, Partnering, Coordination Meetings and Production Meetings.
2. Ensure that no construction begins before required submittals are approved. Submit Material Safety Data Sheets (MSDS) to the Government as applicable. Immediately stop any work that does not comply with the Task Order scope of work, and direct the removal and replacement of any defective work.
3. Prepare QC Reports.
4. Hold biweekly Task Order QC meetings with Superintendent and Government team; participation shall be suitable for the phase of work.
5. Consult SSHO to ensure that safety inspections are performed.
6. Maintain testing plan and log (if required by Task Order). Ensure that all testing is performed per contract.
7. Maintain deficiency log on site, noting dates deficiency identified, and date corrected.
8. Certify and sign each invoice stating that all work to be paid under the invoice has been completed in accordance with contract requirements.
9. Perform Punch-out and Pre-final inspections, and participate in Final Inspections. Establish list of deficiencies; correct prior to the Final inspection.
10. Ensure that all required keys, operation and maintenance manuals, and warranty certificates are submitted to the Contracting Officer.

QC Manager Uses the Three Phases of Control process for construction QC:

1. Preparatory Phase: Review all applicable documents for compliance with all applicable laws, codes, regulations, and the requirements of the contract, including contract drawings and specifications. Determine requirements for testing and certification. Review submittal approvals for materials, equipment, shop drawings, and applicable methods of construction and installation. Include all Preparatory Phase items in the QC Report.

2. Initial Phase: Observe and inspect the initial portion of the work performed under a definable feature of work to establish the quality of the workmanship, resolve conflicts in construction, ensure that testing is done and certified as required, and to check all work procedures to ascertain the work is in conformance with required safety requirements. Record and report nonconforming work and work not of acceptable quality and requiring correction or rework. Include all Initial Phase items, along with initial phase checklist and, in the QC Report.

3. Follow-Up Phase: Occurs at the completion of each Definable Feature Of Work (DFOW). Ensure the work is in compliance with contract requirements, quality of workmanship for all work is maintained, and all work performed meets safety requirements. Include all Follow-Up Phase items, including date, in the QC Report.

The QC Manager must possess a current certificate showing successful completion of the NAVFAC Contractor Quality Management (CQM) Training.

Contractor Daily Quality Control Report: Reports shall be submitted by 10:00 a.m. the following work day. Contractor Quality Control Reports are to be prepared, signed and dated by the Project QC Manager and shall contain the following information:

1. Date of report, report number, contract number
2. Identify by Task Order number and project title where Preparatory Phase work was performed today.
3. Identify by Task Order number and project title where Initial Phase work was performed today.
4. Results of the Follow-up Phase inspections held today.
5. Include a "Remarks" section in this report which will contain pertinent information including direction received, quality control problem areas, deviations from the QC plan, construction deficiencies encountered, QC meetings held, and corrective action taken by the Contractor.
6. Contractor Quality Control Report certification, signature and date.

C.17 TEMPORARY FACILITIES AND CONTROLS

C.17.1 Contractor Work Site

Limit use of the premises for work and for storage of material and equipment associated with the contract. Unless otherwise specified or separately agreed to, Government-owned material handling equipment, transportation equipment or general tools will not be available for Contractor's use. Clean work area daily and after completion of the work, removing all loose debris and disposing of all non-permanent materials IAW the Contractor's Waste Management Plan. Contractor is to ensure that the Waste Management Plan is in alignment with the Waste Management Plan of the facility in which work is being performed.

C.17.2 Temporary Facilities

The Contractor may provide his own temporary office facilities upon advance approval from the Administrative Contracting Officer. The Contractor shall provide and maintain suitable sanitary facilities within the construction limits of the contract and dispose of sanitary waste in accordance with the applicable laws, and local regulations.

C.17.3 Contractor-Furnished Equipment

Equipment is subject to the inspection and approval of the Administrative Contracting Officer, prior to and during the life of the contract. All equipment and vehicles shall display readily visible Contractor identification markings. Upon request, the Contractor shall relocate stored Contractor-furnished equipment which may interfere with operations of the Government or with others on-site.

C.17.4 Contractor-furnished Material

Protect and secure Contractor-furnished material stored at each applicable project worksite. All replacement units, parts, components, and materials to be used in the maintenance, repair and alteration of facilities and equipment shall be new and compatible with the existing equipment on which it is to be used, and shall comply with applicable Government, commercial, or industrial standards such as Underwriters Laboratories, Inc., and National Electrical Manufacturers Association.

C.17.5 TEMPORARY UTILITIES (FOR TEMPORARY FACILITIES)

1. The Government will provide water and power in reasonable quantities.
2. All labor, material, and equipment necessary to affect temporary utility tie-ins, including transformers if necessary, shall be at the expense of the Contractor and under the surveillance of the Administrative Contracting Officer.
3. The Contractor shall be responsible for any damages to Government, private or public

facilities and property that may result from the installation and removal of these temporary utility tie-ins. Corrections and repairs shall be made at the Contractor's expense.

4. The actual location and installation of the temporary tie-in, together with any interruptions of utilities systems, shall be identified and approved by the Contracting Officer prior to execution. Notify the COR and Station Utilities 15 calendar days prior to any tie-ins.
5. Permanent utility systems, when indicated, will be available for tie-in.
6. Telephone and Data Service: Make arrangements with local telephone company and other pertinent base communication departments.
7. Maintain utility services to existing facilities surrounding the site at all times during construction.
8. Contractor shall install and certify back flow preventers on all connections to the potable water supply system.

C.17.6 Government Installation Operation Affect On Contractor Operations
The project Task Order will identify any known Government Installation operations that may affect the Contractor's work.

C.17.7 Rerouting of Vehicular Traffic
If during the performance of work, it becomes necessary to modify vehicular traffic patterns at any locations, notify the Contracting Officer and provide a Traffic Control Plan detailing the proposed controls to traffic movement within 15 calendar days for approval. The plan shall be in accordance with local governing regulations. Make all notifications and obtain any permits required for modification to traffic movements outside the Government Installation's jurisdiction. Provide cones, signs, barricades, lights, or other traffic control devices and personnel required to control traffic. Do not use foil-backed material for temporary pavement marking because of its potential to conduct electricity during accidents involving downed power lines.

C17.8 Storage Size and Location
The site available for storage shall be as indicated in the project Task Order. If no storage area is identified in the Task Order, the Contractor shall assume that there is not storage space available.

C.17.9 Temporary Sanitary Facilities
Provide adequate sanitary conveniences of a type approved for the use of persons employed on the work, properly secluded from public observation, and maintained in such a manner as required and approved by the Administrative Contracting Officer. Maintain these conveniences at all times. Upon completion of the work, remove the conveniences from the premises, leaving the premises clean. Dispose of sewage through connection to a municipal, district, or Government Installation sanitary sewage system. Where such systems are not available, use chemical toilets or comparably effective units, and periodically empty wastes into a municipal, district, or station sanitary sewage system, or remove waste to a commercial facility. Include provisions for pest control and elimination of odors.

C.17.10 Signs
Place warning signs at the construction area perimeter designating the presence of construction hazards requiring unauthorized persons to keep out. Signs must be placed on all sides of the construction area. All points of entry shall have signs designating the construction site as a hard-hat area. Signs must be professional in appearance, with legible print that is visible by applicable traffic (pedestrian and/or vehicular). All points of entry shall have signs designating the construction site as a hard-hat area (designating the construction site and list PPE required as per APP).

C.18 ENVIRONMENTAL PROTECTION

C.18.1 Provide and maintain, during the life of the IDIQ contract, environmental protection as defined in this Section and individual Task Order. Plan for and provide environmental protective measures to control pollution that develops during normal construction practice. Plan for and provide environmental protective measures required to correct conditions that develop during the construction of permanent or temporary environmental features associated with the

project. Comply with Federal, state, and local regulations pertaining to the environment, including but not limited to water, land, air, and noise pollution

C.18.2 The Request for Proposal for individual Task Order will identify when work shall be conducted on properties that are designated as historic places or areas of sensitive archeological or protected nature. The Contractor shall understand and comply with all applicable protection standards for such sites.

C.18.3 Environmental Protection Plan
The Contractor is required to submit a General Environmental Protection Plan for the IDIQ contract. Amendments to augment the Environmental Protection Plan to adequately address environmental issues applicable to the Task Order may also be required.

C.18.3.1 Environmental Protection Plan Meeting
Fourteen (14) calendar days after the Partnering meeting, schedule to meet with the Procuring Contracting Officer to discuss the Environmental Protection Plan and to develop a mutual understanding relative to the details of environmental protection and awareness, including protecting natural resources, required reports, and other measures to be taken.

C.18.3.2Environmental Protection Plan
Submit an original and five copies of the proposed Environmental Protection Plan to the Contracting Officer for review and approval 14 calendar days after Environmental Protection Plan Meeting. The subsequent plans listed in this section (storm water management, wastewater management, etc.) fall under the purview of the Environmental Protection Plan.

1. Appoint an Environmental Manager for the contract. This is not a key manager under the terms of the Contract, but is still an integral part of meeting the environmental requirements. This person may have other job duties as assigned, provided that the environmental requirements of the contract are met.
   The Environmental Manager will be directly responsible for coordinating Contractor compliance with the DoD Final Governing Standards for Greece, applicable sections of the DoN Environmental and Natural Resources Program Manual OPNVAINST 5090.1, and station requirements. The Environmental Manager will ensure implementation of the Environmental Protection Plan; ensure that all environmental permits are obtained, maintained, and closed out; ensure compliance with Hazardous Materials (storage, handling, and reporting) requirements; coordinate any remediation of regulated substances (lead, asbestos, PCB transformers); and maintain required environmental records and documentation, including training, waste handling, and permitting records.

2. <u>Storm Water Management Plan</u>**:** Address provisions for storm water management to include, at a minimum, the following:

   a. Identify potential sources of pollution which may reasonably be expected to affect the quality of storm water discharge from the site.
   b. Select applicable Best Management Practices (BMPs) from EPA 832-R-92-005.
   c. Describe and ensure implementation of BMPs which will be used to reduce the pollutants in storm water discharge at the construction site.
   d. Consider off-site water quality impacts such as excessive sedimentation, stream bank erosion, discharges to ground water contribution or recharge zones, violations of water quality standards, and spills and discharges of priority pollutants.
   e. Address the following:

      (1) Stabilization and sediment trapping
      (2) Timing and stabilization of sediment trapping measures

(3) Cut and fill slopes
(4) Stabilization of temporary conveyance channel and outlets
(5) Storm drain inlet protection
(6) Underground utility construction
(7) Construction access routes
(8) Removal of temporary BMPs
(9) Dewatering construction sites
(10) Control of pollutants other than sediment on construction sites
(11) Maintenance and inspection of BMPs

f. Submit a storm drain discharge approval request to obtain approval before discharging uncontaminated water into storm drain.

3. Storm Water Pollution Prevention Plan (SWPPP): The Contractor shall not disturb 1 acre or more of land during performance of work on any Task Order, unless specifically noted otherwise. If an acre or more of land is planned to be disturbed, a SWPPP may be required. Requirements for this plan will be identified in the applicable Task Order RFP.

4. Wastewater Management Plan: Address provisions for wastewater management to include, at a minimum, sediment control, oil/water separation, wastewater anticipated to be generated for example sterilizing piping, tool rinsing, surface cleaning and preparation, anticipated contamination levels, required testing and an estimate of daily amount of water requiring discharge and/or disposal. An example of performance requiring a Wastewater Management Plan would be usage for concrete saw cutting water.

5. Air Pollution Control Plan: Address measures to control airborne pollution such as, but not limited to fugitive dust, fugitive emissions, volatile organic compounds and, other air contaminates as required by the DoD Final Governing Standards for Greece, applicable sections of the DoN Environmental and Natural Resources Program Manual OPNVAINST 5090.1, and station requirements. If not already completed perform an AHERA survey prior to doing any renovation or demolition work. Provide a copy of the Asbestos Hazard Emergency Response Act (AHERA) survey to the Base Environmental Office (BEO). The Contractor shall perform all asbestos work IAW all applicable DoD and DoN Environmental and Safety regulations. The Contractor is responsible to follow the DoD Final Governing Standards for Greece and station asbestos waste requirements. The Contractor will need to provide an Asbestos Work Plan IAW EM385-1-1 06.B.05 *Lead and Asbestos Hazard Control Activities*. Any Asbestos Containing Material (ACM) being removed requires the Contractor to provide a copy of the Contractors Asbestos Contractors License as per the Unified Facilities Guide Specification SECTION 02 82 16.00 20 (Engineering Controls of Asbestos Containing Materials.), paragraph 1.5.4 (Contractor's License)

6. Spill Prevention and Spill Response Plan: Address job specific measures to prevent oil and hazardous substances from entering the ground, drainage areas, or local bodies of water. Also include specific procedures for preventing and responding to spills of oil and hazardous substances (OHS). Include a list of items in the spill kit, which are required at each OHS handling or storage site.

7. Salvageable/Reusable Material and Recyclable Waste Plan: Address the salvage and reuse of construction materials and the recycling of wastes from the job site. Measures to be addressed are, at a minimum, the following:

a. Identify anticipated materials and waste for salvage, reuse, and recycling.

b. Describe actions to be taken to promote material reuse or resale and/or recycling.

c. Address on-site accumulation measures such as quantities of accumulation containers, labeling, and location of accumulation area at the job site.

d. Describe any testing and other procedures required prior to removing reusable materials and recyclable wastes from Government property.

e. Include the name, physical address, telephone number of the hauler and the destination. Provide a copy of the Spanish, National, Regional or local permit (cover) or license for recycling, as appropriate (this may be waived when not required by the regulating authorities). Please provide this information as an Appendix to the EPP for ease of reference.

f. Include a discussion of the solid waste tracking procedures as specified in this Section.

g. For item(s) that designate as dangerous waste, include a statement that describes the on-site accumulation procedures, transportation, and disposal facilities. Unless there is a variation from the information provided in the dangerous waste management plan, a statement referring to that plan is acceptable.

8. Solid Waste Management Plan: All waste management practices shall be performed in accordance with the DoD Final Governing Standards for Spain and in accordance with the approved Environmental Protection Plan.

a. Address the control, management, and disposal of solid waste as defined herein. Include an approximate time-line and quantity of solid waste requiring disposal. This includes management of rubbish, CD debris, liquid waste, landfill controlled waste, garbage, or other discarded items, as applicable. Include a copy of the Spanish, National, Regional, or local disposal permit or license for the solid waste disposal facility that includes: the type of facility, name, physical address, phone numbers, issuing authority and approval signature, permitted entity and period of issuance for all wastes. Submit a copy of the Spanish hauling permit (if waste transported by franchised hauler).

b. For landfill controlled waste, the Contractor shall provide the name, physical address, and telephone number of the permitted facility to receive the waste material, estimated quantity of waste to be delivered, estimated schedule dates of shipment, and the name and address of transporter, as applicable.

c. For disposal of liquid wastes at a wastewater treatment plant, the Contractor shall provide the facility name, physical address, telephone number, and type of waste the facility accepts.

d. Solid Waste Management Reporting.

Complete a serialized Solid Waste Tracking Sheet (SWTS) for each off-site shipment of solid waste (except sanitary sewage), recyclable materials and non-dangerous recyclable waste. Do not use SWTS for asbestos, PCBs or dangerous waste.

e. Waste Determination Documentation

Submit Waste Determination Documentation for each undesignated waste type within 1 calendar day of waste generation. Documentation shall consist of the installation-specific waste form and related information prepared by the Contractor and submitted to the Government for the purpose of Government designation of waste. Examples of related documentation include MSDS, sampling and analysis plans, analytical information, and description of waste or process that generate waste.

Waste shall not be transported off-site prior to designation by the Government. No waste shall be transported off site without completed Waste Determination Documentation. Follow all instructions provided on completed Waste Determination Documentation forms.

f. Control of Waste Without Documented Waste Determination

Collect wastes for which the Waste Determination Documentation has not been completed, label "pending analysis. Accumulate and manage in the same manner as Dangerous Waste per the DoD Final Governing Standards for Spain until the waste determination documentation is completed.

C.18.4 Construction and Demolition Waste Management

Contractor is required to implement a waste management program for recycling non-hazardous construction and demolition waste material for each Task Order. It is intended to reduce the amount of waste requiring landfill disposal and to promote more efficient use of construction materials. Any additional project specific requirements shall be included in the Task Order. Government policy is to apply sound environmental principles in construction and use of facilities. As part of the implementation of that policy the Contractor shall: (1) practice efficient waste management when sizing, cutting, and installing products and materials and (2) use all reasonable means to divert construction and demolition waste from landfills and incinerators and to facilitate their recycling or reuse.

The Contractor shall take a pro-active, responsible role in the management of construction and demolition waste and require all Subcontractors, vendors, and suppliers to participate in the effort. Construction and demolition waste includes products of demolition or removal, excess or unusable construction materials, packaging materials for construction products, and other materials generated during the construction process but not incorporated into the work. In the management of waste consideration shall be given to the availability of viable markets, the condition of the material, the ability to provide the material in suitable condition and in a quantity acceptable to available markets, and time constraints imposed by internal project completion mandates. The Contractor shall be responsible for implementation of any special programs involving rebates or similar incentives related to recycling of waste. Revenues or other savings obtained for salvage, or recycling shall accrue to the Contractor. Firms and facilities used for recycling, reuse, and disposal shall be appropriately permitted for the intended use to the extent required by federal, state, and local regulations.

C.18.4.1 Task Order Waste Management Plan

A Task Order specific waste management plan shall be submitted within 10 calendar days after task order award, prior to initiating any site preparation work. The plan shall include the following:

1. Name of individuals on the Contractor's staff responsible for waste prevention and management.

2. Actions that will be taken to reduce solid waste generation.

3. Description of the specific approaches to be used in recycling/reuse of the various materials generated, including the areas and equipment to be used for processing, sorting, and temporary storage of wastes.

4. Characterization, including estimated types and quantities, of the waste to be generated.

5. Name of landfill and/or incinerator to be used and the estimated costs for use, assuming that there would be no salvage or recycling on the project.

6. Identification of local and regional reuse programs, including non-profit organizations such as schools, local housing agencies, and organizations that accept used materials such as materials exchange networks and Habitat for Humanity.

7. List of specific waste materials that will be salvaged for resale, salvaged and reused, or recycled. Recycling facilities that will be used shall be identified.

8. Identification of materials that cannot be recycled/reused with an explanation or justification.

9. Anticipated net cost savings determined by subtracting Contractor program management costs and the cost of disposal from the revenue generated by sale of the materials and the incineration and/or landfill cost avoidance.

C.18.4.2 Records shall be maintained to document the quantity of waste generated; the quantity of waste diverted through sale, reuse, or recycling; and the quantity of waste disposed by landfill or incineration. The records shall be made available to the Administrative Contracting Officer during construction, and a copy of the records shall be delivered to the Administrative Contracting Officer upon completion of the construction Task Order.

C.18.4.3 The necessary containers, bins and storage areas to facilitate effective waste management shall be provided and shall be clearly and appropriately identified. Recyclable materials shall be handled to prevent contamination of materials from incompatible products and materials.

C.18.4.4 Except as otherwise specified, disposal shall be in accordance with the following:

1. Reuse: First consideration shall be given to salvage for reuse since little or no re-processing is necessary for this method, and less pollution is created when items are reused in their original form. Sale or donation of waste suitable for reuse shall be considered. Salvaged materials, other than those specified in other sections to be salvaged and reinstalled, shall not be used in any Task Order.

2. Recycle. Waste materials that are not suitable for reuse but having value as being recyclable, shall be made available for recycling whenever economically feasible.

3. Waste: Materials with no practical use or economic benefit shall be disposed at a landfill or incinerator.

C.18.5 Air Pollution Control

Work under a specific Task Order may require the Contractor to submit notices to the Installation Environmental Program Director. Submit notices via the Contracting Officer prior to the start of work covered by the DoD Final Governing Standards for Spain.

All new emissions generating equipment designs and purchases must include the manufacturer's certified emissions analysis to verify compliance with the requirements from FGS-SPAIN Chapter 2 Air Emissions, C2.3 Criteria for the following equipment types:

- Steam/Hot Water Generating Units
- Incinerators
- PCE Dry Cleaning Machines
- Chromium Electroplating and Anodizing Tanks
- Halogenated Solvent Cleaning Machines
- Units Containing Ozone Depleting Substances (ODS)

The manufacturer's certified emissions documentation shall be provided to Environmental Division for review and record prior to purchase.

C.18.6 Releases/Spills of Oil and Hazardous Substances

The Contractor shall be familiar with the DoD Final Governing Standards for Spain and the NAVSTA Rota instruction for emergency spill procedures on NAVSTA Rota and shall comply in an expeditious and procedurally appropriate manner. Immediately after making contact with NAVSTA Rota for on-base spills and Spanish, National, Regional and local emergency response authorities, the Contractor shall notify the Administrative Contracting Officer and the Installation Environmental Program Director.

C.18.7 Refrigerant Maintenance Control

Work under a specific Task Order may require the Contractor to perform maintenance or retrofit existing Heating, Ventilation or Air Conditioning (HVAC) systems. Submit a completed Environmental Refrigerant Work Checklist to the Contracting Officer upon completion of the HVAC maintenance work.

C.18.8 Environmental Compliance Assessment Training and Tracking (ECATTS)

The QC Manager is responsible for environmental compliance on projects unless an Environmental Manager is named. The QC Manager (and alternative QC Manager) or Environmental Manager shall complete ECATTS training prior to starting respective portions of on-site work under this contract.

If personnel changes occur for any of these positions after starting work, replacement personnel shall complete ECATTS training within 14 days of assignment to the project. Submit an ECATTS certificate of completion for personnel who have completed the required "Environmental Compliance Assessment Training and Tracking System (ECATTS)" training. This training is web-based and can be accessed from any computer with Internet access using the following instructions. Register for NAVFAC Environmental Compliance Training and Tracking System, by logging on to http://navfac.ecatts.com/. Obtain the password for registration from the Contracting Officer or Contracting Officer's Representative. This training has been structured to allow contractor personnel to receive credit under this contract and also to carry forward credit to future contracts. Contractors shall ensure that the QC Manager (and alternate QC Manager) or Environmental Manager review their training plans for new modules or updated training requirements prior to beginning work. Some training modules are tailored for specific national regulatory requirements; therefore, Contractors working in multiple area will be required to re-take modules tailored to the country where the contract work is being performed.

ECATTS is available for use by all contractor and subcontractor personnel associated with this project. These other personnel are encouraged (but not required) to take the training and may do so at their discretion.

C.19 ENVIRONMENTAL MANAGEMENT SYSTEM (EMS)

The Contractor shall perform work under this contract consistent with the following EMS goals and policy.

C.19.1 Goals:

- Reduce purchase and use of toxic and hazardous materials;
- Expand purchase of green products and services; increase recycling;
- Reduce energy and water use;
- Increase use of alternative fuels and renewable energy;
- Integrate green building concepts in major renovations and new construction;
- Prevent pollution at the source; and
- Continual improvement.

C.19.2 Policy:

- Protect public health and the environment by being an environmentally responsible member of the community;
- Preserve our natural, historic and cultural resources;
- Conserve natural resources by reducing what we discard, reusing items, and recycling materials, which includes purchasing products made from recycled materials;
- Integrate sound environmental practices into all our operations and business decisions; Integrate environmental protection requirements and pollution prevention initiatives into the early planning, design and procurement of facilities, equipment and material, as well as the planning and implementation of military training activities;

- Prevent or minimize pollution at its source as we seek out ways to eliminate or further minimize use of hazardous materials and generation of hazardous waste;
- Maintain a sound partnership with regulatory agencies to sustain our compliance with existing and new environmental laws and regulations;
- Enhance our program as we develop and implement an Environmental Management System; and
- Adhere to this policy, remind one another to do so, and ensure that our entire community knows this is our policy by our actions as well as our words.

C.19.3 The Contractor shall maintain monitoring and measurement information to address the EMS goals and policy and provide the EMS Goals and Policy Measurement Information to the KO when requested. In the event an EMS nonconformance or environmental noncompliance associated with the contracted services, tasks, or actions occurs, the Contractor shall take corrective and/or preventative actions. In the case of a noncompliance, the Contractor shall assume legal and financial liability for the noncompliance and take corrective action immediately to remedy the noncompliance. In the case of a nonconformance, the Contractor shall respond and take corrective action based on the time schedule established by the KO. The Contractor shall ensure that its employees are aware of their roles and responsibilities under the EMS and how these EMS roles and responsibilities affect work performed under the contract.

CLAUSES INCORPORATED BY REFERENCE

52.202-1	Definitions	JAN 2012
52.203-3	Gratuities	APR 1984
52.203-5	Covenant Against Contingent Fees	APR 1984
52.203-7	Anti-Kickback Procedures	OCT 2010
52.203-8	Cancellation, Rescission, and Recovery of Funds for Illegal or Improper Activity	JAN 1997
52.203-10	Price Or Fee Adjustment For Illegal Or Improper Activity	JAN 1997
52.203-12	Limitation On Payments To Influence Certain Federal Transactions	OCT 2010
52.203-13	Contractor Code of Business Ethics and Conduct	APR 2010
52.204-2	Security Requirements	AUG 1996
52.204-4	Printed or Copied Double-Sided on Postconsumer Fiber Content Paper	MAY 2011
52.204-9	Personal Identity Verification of Contractor Personnel	JAN 2011
52.204-10	Reporting Executive Compensation and First-Tier Subcontract Awards	AUG 2012
52.209-6	Protecting the Government's Interest When Subcontracting With Contractors Debarred, Suspended, or Proposed for Debarment	DEC 2010
52.209-9	Updates of Publicly Available Information Regarding Responsibility Matters	FEB 2012
52.209-10	Prohibition on Contracting With Inverted Domestic Corporations	MAY 2012
52.211-13	Time Extensions	SEP 2000
52.215-2	Audit and Records—Negotiation	OCT 2010
52.216-18	Ordering	OCT 1995
52.222-50	Combating Trafficking in Persons	FEB 2009
52.223-3	Hazardous Material Identification And Material Safety Data	JAN 1997
52.223-5	Pollution Prevention and Right-to-Know Information	MAY 2011
52.223-6	Drug-Free Workplace	MAY 2001

52.223-17	Affirmative Procurement of EPA-Designated Items in Service and Construction Contracts	MAY 2008
52.223-18	Encouraging Contractor Policies To Ban Text Messaging While Driving	AUG 2011
52.225-13	Restrictions on Certain Foreign Purchases	JUN 2008
52.225-14	Inconsistency Between English Version And Translation Of Contract	FEB 2000
52.225-25	Prohibition on Contracting with Entities Engaging in Certain Activities or Transactions Relating to Iran-- Representation and Certifications.	DEC 2012
52.227-4	Patent Indemnity-Construction Contracts	DEC 2007
52.228-2	Additional Bond Security	OCT 1997
52.228-3	Worker's Compensation Insurance (Defense Base Act)	APR 1984
52.228-4	Workers' Compensation and War-Hazard Insurance Overseas	APR 1984
52.228-11	Pledges Of Assets	JAN 2012
52.228-15	Performance and Payment Bonds--Construction	OCT 2010
52.229-6	Taxes--Foreign Fixed-Price Contracts	FEB 2013
52.232-5	Payments under Fixed-Price Construction Contracts	SEP 2002
52.232-17	Interest	OCT 2010
52.232-23	Alt I Assignment of Claims (Jan 1986) - Alternate I	APR 1984
52.232-25	Prompt Payment	OCT 2008
52.232-27	Prompt Payment for Construction Contracts	OCT 2008
52.232-33	Payment by Electronic Funds Transfer--Central Contractor Registration	OCT 2003
52.233-1	Disputes	JUL 2002
52.233-1	lt I Disputes (Jul 2002) - Alternate I	DEC 1991
52.233-3	Protest After Award	AUG 1996
52.236-2	Differing Site Conditions	APR 1984
52.236-3	Site Investigation and Conditions Affecting the Work	APR 1984
52.236-5	Material and Workmanship	APR 1984
52.236-6	Superintendence by the Contractor	APR 1984
52.236-7	Permits and Responsibilities	NOV 1991
52.236-8	Other Contracts	APR 1984
52.236-9	Protection of Existing Vegetation, Structures, Equipment, Utilities, and Improvements	APR 1984
52.236-10	Operations and Storage Areas	APR 1984
52.236-11	Use and Possession Prior to Completion	APR 1984
52.236-12	Cleaning Up	APR 1984
52.236-13	Accident Prevention	NOV 1991
52.236-14	Availability and Use of Utility Services	APR 1984
52.236-15	Schedules for Construction Contracts	APR 1984
52.236-17	Layout of Work	APR 1984
52.236-21	Specifications and Drawings for Construction	FEB 1997
52.236-23	Responsibility of the Architect-Engineer Contractor	APR 1984
52.236-24	Work Oversight in Architect-Engineer Contracts	APR 1984
52.236-25	Requirements for Registration of Designers JUN 2003	
52.236-26	Preconstruction Conference	FEB 1995
52.242-13	Bankruptcy	JUL 1995
52.242-14	Suspension of Work	APR 1984
52.243-4	Changes	JUN 2007
52.244-5	Competition In Subcontracting	DEC 1996

52.244-6	Subcontracts for Commercial Items	DEC 2010
52.245-1	Government Property	APR 2012
52.245-9	Use And Charges	APR 2012
52.246-12	Inspection of Construction	AUG 1996
52.246-13	Inspection--Dismantling, Demolition, or Removal of Improvements	AUG 1996
52.246-21	Warranty of Construction	MAR 1994
52.247-64	Preference for Privately Owned U.S. - Flag Commercial Vessels	FEB 2006
52.248-3	Value Engineering-Construction	OCT 2010
52.249-2	Alt I Termination for Convenience of the Government (Fixed-Price) (Apr 2012) - Alternate I	SEP 1996
52.249-10	Default (Fixed-Price Construction)	APR 1984
52.253-1	Computer Generated Forms	JAN 1991
252.201-7000	Contracting Officer's Representative	DEC 1991
252.203-7000	Requirements Relating to Compensation of Former DoD Officials	SEP 2011
252.203-7001	Prohibition On Persons Convicted of Fraud or Other Defense-Contract-Related Felonies	DEC 2008
252.203-7002	Requirement to Inform Employees of Whistleblower Rights	JAN 2009
252.203-7005	Representation Relating to Compensation of Former DoD Officials	NOV 2011
252.204-7000	Disclosure Of Information	DEC 1991
252.204-7003	Control Of Government Personnel Work Product	APR 1992
252.204-7004 Alt A	Central Contractor Registration Alternate A	MAY 2013
252.204-7006	Billing Instructions	OCT 2005
252.204-7008	Export-Controlled Items	APR 2010
252.205-7000	Provision Of Information To Cooperative Agreement Holders	DEC 1991
252.209-7004	Subcontracting With Firms That Are Owned or Controlled By The Government of a Terrorist Country	DEC 2006
252.211-7007	Reporting of Government-Furnished Property	AUG 2012
252.216-7003	Economic Price Adjustment - Wage Rates or Material Prices Controlled by a Foreign Government	MAR 2012
252.222-7002	Compliance With Local Labor Laws (Overseas)	JUN 1997
252.222-7004	Compliance With Spanish Social Security Laws and Regulations	JUN 1997
252.223-7001	Hazard Warning Labels	DEC 1991
252.223-7006	Prohibition On Storage And Disposal Of Toxic And Hazardous Materials	APR 2012
252.223-7008	Prohibition of Hexavalent Chromium	MAY 2011
252.225-7041	Correspondence in English	JUN 1997
252.227-7033	Rights in Shop Drawings	APR 1966
252.228-7006	Compliance With Spanish Laws and Insurance	DEC 1998
252.229-7000	Invoices Exclusive of Taxes or Duties	JUN 1997
252.229-7005	Tax Exemptions (Spain)	MAR 2012
252.232-7003	Electronic Submission of Payment Requests and Receiving Reports	JUN 2012
252.232-7008	Assignment of Claims (Overseas)	JUN 1997
252.232-7010	Levies on Contract Payments	DEC 2006
252.236-7000	Modification Proposals-Price Breakdown	DEC 1991
252.236-7002	Obstruction of Navigable Waterways	DEC 1991

252.236-7005	Airfield Safety Precautions	DEC 1991
252.242-7004	Material Management And Accounting System	MAY 2011
252.243-7001	Pricing Of Contract Modifications	DEC 1991
252.243-7002	Requests for Equitable Adjustment	DEC 2012
252.244-7000	Subcontracts for Commercial Items and Commercial Components (DoD Contracts)	MAR 2013
252.246-7000	Material Inspection And Receiving Report	MAR 2008
252.247-7023	Transportation of Supplies by Sea	MAY 2002
252.247-7024	Notification Of Transportation Of Supplies By Sea	MAR 2000
5252.216-9316	UNDEFINITIZED TASK/DELIVERY ORDERS (OCT2007)	SEP 1999
5252.236-9301	Special Working Conditions and Entry to Work Area	OCT 2004
5252.236-9310	Record Drawings	OCT 2004

CLAUSES INCORPORATED BY FULL TEXT

DATA UNIVERSAL NUMBERING SYSTEM NUMBER MAINTENANCE (DEC 2012)

(a) Definition. Data Universal Numbering System (DUNS) number, as used in this clause, means the 9-digit number assigned by Dun and Bradstreet, Inc. (D&B) to identify unique business entities, which is used as the identification number for Federal Contractors.
(b) The Contractor shall ensure that the DUNS number is maintained with Dun & Bradstreet throughout the life of the contract. The Contractor shall communicate any change to the DUNS number to the Contracting Officer within 30 days after the change, so an appropriate modification can be issued to update the data on the contract. A change in the DUNS number does not necessarily require a novation be accomplished. Dun & Bradstreet may be contacted—
(1) Via the internet at http://fedgov.dnb.com/webform or if the Contractor does not have internet access, it may call Dun and Bradstreet at 1-866-705-5711 if located within the United States; or(2) If located outside the United States, by contacting the local Dun and Bradstreet office.
(End of clause)

52.211-10 COMMENCEMENT, PROSECUTION, AND COMPLETION OF WORK (APR 1984)

The Contractor shall be required to (a) commence work under this contract within 15 calendar days after the date the Contractor receives the notice to proceed, (b) prosecute the work diligently, and (c) complete the entire work ready for use not later than [to be completed in each task order] calendar days after notice to proceed.
The time stated for completion shall include final cleanup of the premises.

(End of clause)

52.211-10 COMMENCEMENT, PROSECUTION, AND COMPLETION OF WORK (APR 1984) -ALTERNATE I (APR 1984)

The Contractor shall be required to (a) commence work under this contract within 15 calendar days after the date the Contractor receives the notice to proceed, (b) prosecute the work diligently, and (c) complete the entire work ready for use not later than [to be completed in each task order] calendar days after notice to proceed. The time stated for completion shall include final cleanup of the premises.
The completion date is based on the assumption that the successful offeror will receive the notice to proceed by [to be completed in each task order as applicable]. The completion date will be extended by the number of calendar days after the above date that the Contractor receives the notice to proceed, except to the extent that the delay in issuance of the notice to proceed results from the failure of the Contractor to execute the contract and give the required performance and payment bonds within the time specified in the offer.

(End of clause)

52.211-12 LIQUIDATED DAMAGES--CONSTRUCTION (SEP 2000)

(a) If the Contractor fails to complete the work within the time specified in the contract, the Contractor shall pay liquidated damages to the Government in the amount of [to be completed with each task order] for each calendar day of delay until the work is completed or accepted.
(b) If the Government terminates the Contractor's right to proceed, liquidated damages will continue to accrue until the work is completed. These liquidated damages are in addition to excess costs of repurchase under the Termination clause.

(End of clause)

52.216-19 ORDER LIMITATIONS. (OCT 1995)
(a) Minimum order. When the Government requires supplies or services covered by this contract in an amount of less than $3,000, the Government is not obligated to purchase, nor is the Contractor obligated to furnish, those supplies or services under the contract.
(b) Maximum order. The Contractor is not obligated to honor:
(1) Any order for a single item in excess of $1,000,000;
(2) Any order for a combination of items in excess of $1,000,000.

(End of clause)

52.216-22 INDEFINITE QUANTITY. (OCT 1995)

(a) This is an indefinite-quantity contract for the supplies or services specified, and effective for the period stated, in the Schedule. The quantities of supplies and services specified in the Schedule are estimates only and are not purchased by this contract.
(b) Delivery or performance shall be made only as authorized by orders issued in accordance with the Ordering clause. The Contractor shall furnish to the Government, when and if ordered, the supplies or services specified in the Schedule up to and including the quantity designated in the Schedule as the "maximum". The Government shall order at least the quantity of supplies or services designated in the Schedule as the "minimum".
(c) Except for any limitations on quantities in the Order Limitations clause or in the Schedule, there is no limit on the number of orders that may be issued. The Government may issue orders requiring delivery to multiple destinations or performance at multiple locations.
(d) Any order issued during the effective period of this contract and not completed within that period shall be completed by the Contractor within the time specified in the order. The contract shall govern the Contractor's and Government's rights and obligations with respect to that order to the same extent as if the order were completed during the contract's effective period; provided, that the Contractor shall not be required to make any deliveries under this contract after the delivery period of the final task order placed in an ordering period.

(End of clause)

52.217-9 OPTION TO EXTEND THE TERM OF THE CONTRACT (MAR 2000)
(a) The Government may extend the term of this contract by written notice to the Contractor within 30 days; provided that the Government gives the Contractor a preliminary written notice of its intent to extend at least 60 days before the contract expires. The preliminary notice does not commit the Government to an extension.
(b) If the Government exercises this option, the extended contract shall be considered to include this option clause.
(c) The total duration of this contract, including the exercise of any options under this clause, shall not exceed 60 months.

(End of clause)

52.229-6 TAXES--FOREIGN FIXED-PRICE CONTRACTS (FEB 2013)

(a) To the extent that this contract provides for furnishing supplies or performing services outside the United States and its outlying areas, this clause applies in lieu of any Federal, State, and local taxes clause of the contract.

(b) Definitions. As used in this clause--

"Contract date," means the date set for bid opening or, if this is a negotiated contract or a modification, the effective date of this contract or modification.

Country concerned means any country, other than the United States and its outlying areas, in which expenditures under this contract are made.

"Tax" and "taxes," include fees and charges for doing business that are levied by the government of the country concerned or by its political subdivisions.
"All applicable taxes and duties," means all taxes and duties, in effect on the contract date, that the taxing authority is imposing and collecting on the transactions or property covered by this contract, pursuant to written ruling or regulation in effect on the contract date.

"After-imposed tax," means any new or increased tax or duty, or tax that was exempted or excluded on the contract date but whose exemption was later revoked or reduced during the contract period, other than excepted tax, on the transactions or property covered by this contract that the Contractor is required to pay or bear as the result of legislative, judicial, or administrative action taking effect after the contract date.

"After-relieved tax," means any amount of tax or duty, other than an excepted tax, that would otherwise have been payable on the transactions or property covered by this contract, but which the Contractor is not required to pay or bear, or for which the Contractor obtains a refund, as the result of legislative, judicial, or administrative action taking effect after the contract date.

"Excepted tax," means social security or other employment taxes, net income and franchise taxes, excess profits taxes, capital stock taxes, transportation taxes, unemployment compensation taxes, and property taxes. "Excepted tax" does not include gross income taxes levied on or measured by sales or receipts from sales, property taxes assessed on completed supplies covered by this contract, or any tax assessed on the Contractor's possession of, interest in, or use of property, title to which is in the U.S. Government.

(c) (1) Unless otherwise provided in this contract, the contract price includes all applicable taxes and duties, except taxes and duties that the Government of the United States and the government of the country concerned have agreed shall not be applicable to expenditures in such country by or on behalf of the United States, except as provided in subparagraph (c)(2) of this clause.

(2) Taxes imposed under 26 U.S.C. 5000C may not be—

(i) Included in the contract price; nor

(ii) Reimbursed.

(d) (1) Except as provided in subparagraph (d)(2) of this clause, the contract price shall be increased by the amount of any after-imposed tax or of any tax or duty specifically excluded from the contract price by a provision of this contract that the Contractor is required to pay or bear, including any interest or penalty, if the Contractor states in writing that

the contract price does not include any contingency for such tax and if liability for such tax, interest, or penalty was not incurred through the Contractor's fault, negligence, or failure to follow instructions of the Contracting Officer or to comply with the provisions of paragraph (i) below.

(2) The contract price may not be increased to offset taxes imposed under 26 U.S.C. 5000C

(e) The contract price shall be decreased by the amount of any after-relieved tax, including any interest or penalty. The Government of the United States shall be entitled to interest received by the Contractor incident to a refund of taxes to the extent that such interest was earned after the Contractor was paid by the Government of the United States for such taxes. The Government of the United States shall be entitled to repayment of any penalty refunded to the Contractor to the extent that the penalty was paid by the Government.

(f) The contract price shall be decreased by the amount of any tax or duty, other than an excepted tax, that was included in the contract and that the Contractor is required to pay or bear, or does not obtain a refund of, through the Contractor's fault, negligence, or failure to follow instructions of the Contracting Officer or to comply with the provisions of paragraph (i) below.

(g) No adjustment shall be made in the contract price under this clause unless the amount of the adjustment exceeds $250.

(h) If the Contractor obtains a reduction in tax liability under the United States Internal Revenue Code (Title 26, U.S. Code) because of the payment of any tax or duty that either was included in the contract price or was the basis of an increase in the contract price, the amount of the reduction shall be paid or credited to the Government of the United States as the Contracting Officer directs.

(i) The Contractor shall take all reasonable action to obtain exemption from or refund of any taxes or duties, including interest or penalty, from which the United States Government, the Contractor, any subcontractor, or the transactions or property covered by this contract are exempt under the laws of the country concerned or its political subdivisions or which the governments of the United States and of the country concerned have agreed shall not be applicable to expenditures in such country by or on behalf of the United States.

(j) The Contractor shall promptly notify the Contracting Officer of all matters relating to taxes or duties that reasonably may be expected to result in either an increase or decrease in the contract price and shall take appropriate action as the Contracting Officer directs. The contract price shall be equitably adjusted to cover the costs of action taken by the Contractor at the direction of the Contracting Officer, including any interest, penalty, and reasonable attorneys' fees.

(End of clause)

52.233-4 APPLICABLE LAW FOR BREACH OF CONTRACT CLAIM (OCT 2004)

United States law will apply to resolve any claim of breach of this contract.

(End of clause)

52.236-1 PERFORMANCE OF WORK BY THE CONTRACTOR (APR 1984)

The Contractor shall perform on the site, and with its own organization, work equivalent to at least fifty (50%) percent of the total amount of work to be performed under the contract. This percentage may be reduced by a supplemental agreement to this contract if, during performing the work, the Contractor requests a reduction and the Contracting Officer determines that the reduction would be to the advantage of the Government.

(End of clause)

52.236-4 PHYSICAL DATA (APR 1984) [To be completed with each task order as applicable]

Data and information furnished or referred to below is for the Contractor's information. The Government shall not be responsible for any interpretation of or conclusion drawn from the data or information by the Contractor.

(a) The indications of physical conditions on the drawings and in the specifications are the result of site investigations by . . . . . [insert a description of investigational methods used, such as surveys, auger borings, core borings, test pits, probings, test tunnels].

(b) Weather conditions . . . . . (insert a summary of weather records and warnings).

(c) Transportation facilities . . . . . (insert a summary of transportation facilities providing access from the site, including information about their availability and limitations.

(d) . . . . . (insert other pertinent information).

(End of clause)

52.252-2 CLAUSES INCORPORATED BY REFERENCE (FEB 1998)

This contract incorporates one or more clauses by reference, with the same force and effect as if they were given in full text. Upon request, the Contracting Officer will make their full text available. Also, the full text of a clause may be accessed electronically at this/these address(es):

www.farsite.hill.af.mil
www.acquisition.gov/far/

(End of clause)

252.216-7006 ORDERING (MAY 2011)

(a) Any supplies and services to be furnished under this contract shall be ordered by issuance of delivery orders or task orders by the individuals or activities designated in the contract schedule. Such orders may be issued from the award date through the effective term of the contract.

(b) All delivery orders or task orders are subject to the terms and conditions of this contract. In the event of conflict between a delivery order or task order and this contract, the contract shall control.

(c)(1) If issued electronically, the order is considered ``issued'' when a copy has been posted to the Electronic Document Access system, and notice has been sent to the Contractor.

(2) If mailed or transmitted by facsimile, a delivery order or task order is considered ``issued'' when the Government deposits the order in the mail or transmits by facsimile. Mailing includes transmittal by U.S. mail or private delivery services.

(3) Orders may be issued orally only if authorized in the schedule.

(End of Clause)

252.225-7043 ANTITERRORISM/FORCE PROTECTION POLICY FOR DEFENSE CONTRACTORS OUTSIDE THE UNITED STATES (MAR 2006)

(a) Definition. United States, as used in this clause, means, the 50 States, the District of Columbia, and outlying areas.

(b) Except as provided in paragraph (c) of this clause, the Contractor and its subcontractors, if performing or traveling outside the United States under this contract, shall--

(1) Affiliate with the Overseas Security Advisory Council, if the Contractor or subcontractor is a U.S. entity;

(2) Ensure that Contractor and subcontractor personnel who are U.S. nationals and are in-country on a no transitory basis, register with the U.S. Embassy, and that Contractor and subcontractor personnel who are third country nationals comply with any security related requirements of the Embassy of their nationality;

(3) Provide, to Contractor and subcontractor personnel, antiterrorism/force protection awareness information commensurate with that which the Department of Defense (DoD) provides to its military and civilian personnel and their families, to the extent such information can be made available prior to travel outside the United States; and

(4) Obtain and comply with the most current antiterrorism/force protection guidance for Contractor and subcontractor personnel.

(c) The requirements of this clause do not apply to any subcontractor that is--

(1) A foreign government;

(2) A representative of a foreign government; or

(3) A foreign corporation wholly owned by a foreign government.

(d) Information and guidance pertaining to DoD antiterrorism/force protection can be obtained from the Naval Criminal Investigative Service (NCIS), Code 21;telephone DSN 288-9077 or commercial (202) 433-9077.

(End of clause)

252.225-7045 BALANCE OF PAYMENTS PROGRAM--CONSTRUCTION MATERIAL UNDER TRADE AGREEMENTS (NOV 2012)

(a) Definitions. As used in this clause--

Caribbean Basin country construction material means a construction material that---

(1) Is wholly the growth, product, or manufacture of a Caribbean Basin country; or

(2) In the case of a construction material that consists in whole or in part of materials from another country, has been substantially transformed in a Caribbean Basin country into a new and different construction material distinct from the materials from which it was transformed.

Commercially available off-the-shelf (COTS) item—

(1) Means any item of supply (including construction material) that is--

(i) A commercial item (as defined in paragraph (1) of the definition of ``commercial item" in section 2.101 of the Federal Acquisition Regulation);

(ii) Sold in substantial quantities in the commercial marketplace; and

(iii) Offered to the Government, under a contract or subcontract at any tier, without modification, in the same form in which it is sold in the commercial marketplace; and

(2) Does not include bulk cargo, as defined in section 3 of the Shipping Act of 1984 (46 U.S.C. 40102), such as agricultural products and petroleum products.

Component means any article, material, or supply incorporated directly into construction material.

Construction material means an article, material, or supply brought to the construction site by the Contractor or a subcontractor for incorporation into the building or work. The term also includes an item brought to the site preassembled from articles, materials, or supplies. However, emergency life safety systems, such as emergency lighting, fire alarm, and audio evacuation systems, that are discrete systems incorporated into a public building or work and that are produced as complete systems, are evaluated as a single and distinct construction material regardless of when or how the individual parts or components of those systems are delivered to the construction site. Materials purchased directly by the Government are supplies, not construction material.

Cost of components means—

(1) For components purchased by the Contractor, the acquisition cost, including transportation costs to the place of incorporation into the end product (whether or not such costs are paid to a domestic firm), and any applicable duty (whether or not a duty-free entry certificate is issued); or

(2) For components manufactured by the Contractor, all costs associated with the manufacture of the component, including transportation costs as described in paragraph (1) of this definition, plus allocable overhead costs, but excluding profit. Cost of components does not include any costs associated with the manufacture of the construction material.

Designated country means—

(1) A World Trade Organization Government Procurement Agreement (WTO GPA) country (Armenia, Aruba, Austria, Belgium, Bulgaria, Canada, Cyprus, Czech Republic, Denmark, Estonia, Finland, France, Germany, Greece, Hong Kong, Hungary, Iceland, Ireland, Israel, Italy, Japan, Korea (Republic of), Latvia, Liechtenstein, Lithuania, Luxembourg, Malta, Netherlands, Norway, Poland, Portugal, Romania, Singapore, Slovak Republic, Slovenia, Spain, Sweden, Switzerland, Taiwan (known in the World Trade Organization as ``the Separate Customs Territory of Taiwan, Penghu, Kinmen, and Matsu" (Chinese Taipei)), or the United Kingdom); (2) A Free Trade Agreement country (Australia, Bahrain, Canada, Chile, Colombia, Costa Rica, Dominican Republic, El Salvador, Guatemala, Honduras, Korea (Republic of), Mexico, Morocco, Nicaragua, Panama, Peru, or Singapore);

(3) A least developed country (Afghanistan, Angola, Bangladesh, Benin, Bhutan, Burkina Faso, Burundi, Cambodia, Central African Republic, Chad, Comoros, Democratic Republic of Congo, Djibouti, East Timor, Equatorial Guinea, Eritrea, Ethiopia, Gambia, Guinea, Guinea-Bissau, Haiti, Kiribati, Laos, Lesotho, Liberia, Madagascar, Malawi, Maldives, Mali, Mauritania, Mozambique, Nepal, Niger, Rwanda, Samoa, Sao Tome and Principe, Senegal, Sierra Leone, Solomon Islands, Somalia, Tanzania, Togo, Tuvalu, Uganda, Vanuatu, Yemen, or Zambia); or

(4) A Caribbean Basin country (Antigua and Barbuda, Aruba, Bahamas, Barbados, Belize, Bonaire, British Virgin Islands, Curacao, Dominica, Grenada, Guyana, Haiti, Jamaica, Montserrat, Saba, St. Kitts and Nevis, St. Lucia, St. Vincent and the Grenadines, St Eustatius, St Maarten, or Trinidad and Tobago).

Designated country construction material means a construction material that is a WTO GPA country construction material, a Free Trade Agreement country construction material, a least developed country construction material, or a Caribbean Basin country construction material.

Domestic construction material means—

(1) An unmanufactured construction material mined or produced in the United States; or

(2) A construction material manufactured in the United States, if--

(i) The cost of its components mined, produced, or manufactured in the United States exceeds 50 percent of the cost of all its components. Components of foreign origin of the same class or kind for which no availability determinations have been made are treated as domestic; or

(ii) The construction material is a COTS item.

Free Trade Agreement country construction material means a construction material that—

(1) Is wholly the growth, product, or manufacture of a Free Trade Agreement country; or

(2) In the case of a construction material that consists in whole or in part of materials from another country, has been substantially transformed in a Free Trade Agreement country into a new and different construction material distinct from the material from which it was transformed.

Least developed country construction material means a construction material that—

(1) Is wholly the growth, product, or manufacture of a least developed country; or

(2) In the case of a construction material that consists in whole or in part of materials from another country has been substantially transformed in a least developed country into a new and different construction material distinct from the materials from which it was transformed.

United States means the 50 States, the District of Columbia, and outlying areas.

WTO GPA country construction material means a construction material that—

(1) Is wholly the growth, product, or manufacture of a WTO GPA country; or

(2) In the case of a construction material that consists in whole or in part of materials from another country, has been substantially transformed in a WTO GPA country into a new and different construction material distinct from the materials from which it was transformed.

(b) This clause implements the Balance of Payments Program by providing a preference for domestic construction material. In addition, the Contracting Officer has determined that the WTO GPA and Free Trade Agreements apply to this acquisition. Therefore, the Balance of Payments Program restrictions are waived for designated country construction materials.

(c) The Contractor shall use only domestic or designated country construction material in performing this contract, except for—

(1) Construction material valued at or below the simplified acquisition threshold in part 2 of the Federal Acquisition Regulation;

(2) Information technology that is a commercial item; or

(3) The construction material or components listed by the Government as follows:

None.

(End of clause)

252.229-7001 TAX RELIEF (JUN 1997)

(a) Prices set forth in this contract are exclusive of all taxes and duties from which the United States Government is exempt by virtue of tax agreements between the United States Government and the Contractor's government. The following taxes or duties have been excluded from the contract price:

NAME OF TAX: (Offeror Insert) RATE (PERCENTAGE): (Offeror Insert)

(b) The Contractor's invoice shall list separately the gross price, amount of tax deducted, and net price charged.

(c) When items manufactured to United States Government specifications are being acquired, the Contractor shall identify the materials or components intended to be imported in order to ensure that relief from import duties is obtained. If the Contractor intends to use imported products from inventories on hand, the price of which includes a factor for import duties, the Contractor shall ensure the United States Government's exemption from these taxes. The Contractor may obtain a refund of the import duties from its government or request the duty-free import of an amount of supplies or components corresponding to that used from inventory for this contract.

(End of clause)

252.229-7004 STATUS OF CONTRACTOR AS A DIRECTOR CONTRACT (SPAIN) (JUN 1997)

(a) “Direct Contractor,” as used in this clause, means an individual, company, or entity with whom an agency of the United States Department of Defense has executed a written agreement that allows duty-free import of equipment, materials, and supplies into Spain for the construction, development, maintenance, and operation of Spanish-American installations and facilities.

(b) The Contractor is hereby designated as a Direct Contractor under the provisions of Complementary Agreement 5, articles 11, 14, 15, 17, and 18 of the Agreement on Friendship, Defense and Cooperation between the United States Government and the Kingdom of Spain, dated July 2, 1982. The Agreement relates to contacts to be performed in whole or part in Spain, the provisions of which are hereby incorporated into and made a part of this contract by reference.

(c) The Contractor shall apply to the appropriate Spanish authorities for approval of status as a Direct Contractor in order to complete duty-free import of non-Spanish equipment, materials, and supplies represented as necessary for contract performance by the Contracting Officer. Orders for equipment, materials, and supplies placed prior to official notification of such approval shall be at the Contractor's own risk. The Contractor must submit its documentation in sufficient time to permit processing by the appropriate United States and Spanish Government agencies prior to the

arrival of the equipment, material, or supplies in Spain. Seasonal variations in processing times are common, and the Contractor should program its projects accordingly. Any delay or expense arising directly or indirectly from this process shall not excuse untimely performance (except as expressly allowed in other provisions of this contract), constitute a direct or constructive change, or otherwise provide a basis for additional compensation or adjustment of any kind.

(d) To ensure that all duty-free imports are properly accounted for, exported, or disposed of, in accordance with Spanish law, the Contractor shall obtain a written bank letter of guaranty payable to the Treasurer of the United States, or such other authority as may be designated by the Contracting Officer, in the amount set forth in paragraph (g) of this clause, prior to effecting any duty-free imports for the performance of this contract.

(e) If the Contractor fails to obtain the required guaranty, the Contractor agrees that the Contracting Officer may withhold a portion of the contract payments in order to establish a fund in the amount set forth in paragraph (g) of this clause. The fund shall be used for the payment of import taxes in the event that the Contractor fails to properly account for, export, or dispose of equipment, materials, or supplies imported on a duty-free basis.

(f) The amount of the bank letter of guaranty or size of the fund required under paragraph (d) or (e) of this clause normally shall be 5 percent of the contract value. However, if the Contractor demonstrates to the Contracting Officer's satisfaction that the amount retained by the United States Government or guaranteed by the bank is excessive, the amount shall be reduced to an amount commensurate with contingent import tax and duty-free liability. This bank guaranty or fund shall not be released to the Contractor until the Spanish General Directorate of Customs verifies the accounting, export, or disposition of the equipment, material, or supplies imported on a duty free basis.

(g) The amount required under paragraph (d), (e), or (f) of this clause is [To be completed with each task order as applicable]

(h) The Contractor agrees to insert the provisions of this clause, including this paragraph (h), in all subcontracts.

(End of clause)

252.229-7005 TAX EXEMPTIONS (SPAIN) (MAR 2012)

(a) As the Contractor represented in its offer, the contract price, including the prices in subcontracts awarded under this contract, does not include taxes from which the United States Government is exempt.

(b) In accordance with tax relief agreements between the United States Government and the Spanish Government, and because the incumbent contract arises from the activities of the United States Forces in Spain, the contract will be exempt from the following excise, luxury, and transaction taxes:

(1) Derechos de Aduana (Customs Duties).

(2) Impuesto de Compensacion a la Importacion (Compensation Tax on Imports).

(3) Transmissiones Patrionomiales (Property Transfer Tax).

(4) Impuesto Sobre el Lujo (Luxury Tax).

(5) Actos Juridocos Documentados (Legal Official Transactions).

(6) Impuesto Sobre el Trafico de Empresas (Business Trade Tax).

(7) Impuestos Especiales de Fabricacion (Special Products Tax)

(8) Impuesto Sobre el Petroleo y Derivados (Tax on Petroleum and its By-Products).

(9) Impuesto Sobre el Uso de Telefona (Telephone Tax).

(10) Impuesto General Sobre la Renta de Sociedades y demas Entidades Juridicas (General Corporation Income Tax).

(11) Impuesto Industrial (Industrial Tax).

(12) Impuesto de Rentas Sobre el Capital (Capital Gains Tax).

(13) Plus Vailia (Increase on Real Property).

(14) Contribucion Territorial Urbana (Metropolitan Real Estate Tax).

(15) Contribucion Territorial Rustica y Pecuaria (Farmland Real Estate Tax).

(16) Impuestos de la Diputacion (County Service Charges).

(17) Impuestos Municipal y Tasas Parafiscales (Municipal Tax and Charges).

(End of clause)

252.232-7006 WIDE AREA WORKFLOW PAYMENT INSTRUCTIONS (JUN 2012)

(a) Definitions. As used in this clause--

Department of Defense Activity Address Code (DoDAAC) is a six position code that uniquely identifies a unit, activity, or organization.

Document type means the type of payment request or receiving report available for creation in Wide Area WorkFlow (WAWF).

Local processing office (LPO) is the office responsible for payment certification when payment certification is done external to the entitlement system.

(b) Electronic invoicing. The WAWF system is the method to electronically process vendor payment requests and receiving reports, as authorized by DFARS 252.232-7003, Electronic Submission of Payment Requests and Receiving Reports.

(c) WAWF access. To access WAWF, the Contractor shall--

(1) Have a designated electronic business point of contact in the Central Contractor Registration at https://www.acquisition.gov; and

(2) Be registered to use WAWF at https://wawf.eb.mil/ following the step-by-step procedures for self-registration available at this Web site.

(d) WAWF training. The Contractor should follow the training instructions of the WAWF Web-Based Training Course and use the Practice Training Site before submitting payment requests through WAWF. Both can be accessed by selecting the "Web Based Training" link on the WAWF home page at https://wawf.eb.mil/.

(e) WAWF methods of document submission. Document submissions may be via Web entry, Electronic Data Interchange, or File Transfer Protocol.

(f) WAWF payment instructions. The Contractor must use the following information when submitting payment requests and receiving reports in WAWF for this contract/order:

(1) Document type. The Contractor shall use the following document type(s). Navy Construction/Facilities Management Invoice

(2) Inspection/acceptance location. The Contractor shall select the following inspection/acceptance location(s) in WAWF, as specified by the contracting officer.

Inspection – N33191
Acceptance – N33191

(3) Document routing. The Contractor shall use the information in the Routing Data Table below only to fill in applicable fields in WAWF when creating payment requests and receiving reports in the system.

Routing Data Table*

Field Name in WAWF	Data to be entered in WAWF
Pay Official DoDAAC	N68732
Issue By DoDAAC	N33191
Admin DoDAAC	N33191
Inspect By DoDAAC	N33191
Ship To Code	Not Applicable
Ship From Code	Not Applicable
Mark For Code	Not Applicable
Service Approver (DoDAAC)	Not Applicable
Service Acceptor (DoDAAC)	Not Applicable
Accept at Other DoDAAC	Not Applicable
LPO DoDAAC	N33191
DCAA Auditor DoDAAC	Not Applicable
Other DoDAAC(s)	N33191

(4) Payment request and supporting documentation. The Contractor shall ensure a payment request includes appropriate contract line item and subline item descriptions of the work performed or supplies delivered, unit price/cost per unit, fee (if applicable), and all relevant back-up documentation, as defined in DFARS Appendix F, (e.g. timesheets) in support of each payment request.

(5) WAWF email notifications. The Contractor shall enter the email address identified below in the "Send Additional Email Notifications" field of WAWF once a document is submitted in the system.

Not Applicable

(g) WAWF point of contact. (1) The Contractor may obtain clarification regarding invoicing in WAWF from the following contracting activity's WAWF point of contact.

Not Applicable
(2) For technical WAWF help, contact the WAWF helpdesk at 866-618-5988.

(End of clause)

252.233-7001 CHOICE OF LAW (OVERSEAS) (JUNE 1997)

This contract shall be construed and interpreted in accordance with the substantive laws of the United States of America. By the execution of this contract, the Contractor expressly agrees to waive any rights to invoke the jurisdiction of local national courts where this contract is performed and agrees to accept the exclusive jurisdiction of the United States Armed Services Board of Contract Appeals and the United States Court of Federal Claims for hearing and determination of any and all disputes that may arise under the Disputes clause of this contract.

(End of clause)

252.236-7001 CONTRACT DRAWINGS AND SPECIFICATIONS (AUG 2000)

(a) The Government will provide to the Contractor, without charge, one set of contract drawings and specifications, except publications incorporated into the technical provisions by reference, in electronic or paper media as chosen by the Contracting Officer.

(b) The Contractor shall--

(1) Check all drawings furnished immediately upon receipt;

(2) Compare all drawings and verify the figures before laying out the work;

(3) Promptly notify the Contracting Officer of any discrepancies;

(4) Be responsible for any errors that might have been avoided by complying with this paragraph (b); and

(5) Reproduce and print contract drawings and specifications as needed.

(c) In general--

(1) Large-scale drawings shall govern small-scale drawings; and

(2) The Contractor shall follow figures marked on drawings in preference to scale measurements.

(d) Omissions from the drawings or specifications or the misdescription of details of work that are manifestly necessary to carry out the intent of the drawings and specifications, or that are customarily performed, shall not relieve the Contractor from performing such omitted or misdescribed details of the work. The Contractor shall perform such details as if fully and correctly set forth and described in the drawings and specifications.

(e) The work shall conform to the specifications and the contract drawings identified on the following index of drawings:

To be determined on a task order basis.

Note 1: For the purposes of this solicitation, Offerors should take into consideration all documents provided for this solicitation on EuroNECO/NECO/FBO and any revisions made by subsequent solicitation amendments.

Note 2: There is no initial project associated with this solicitation. Upon award of the basic IDIQ contract, Task Order 0001 and all other subsequent task orders will be negotiated and awarded with the contract holder.

(End of clause)

5252.201-9300 CONTRACTING OFFICER AUTHORITY (JUN 1994)

In no event shall any understanding or agreement between the Contractor and any Government employee other than the Contracting Officer on any contract, modification, change order, letter or verbal direction to the Contractor be effective or binding upon the Government. All such actions must be formalized by a proper contractual document executed by an appointed Contracting Officer. The Contractor is hereby put on notice that in the event a Government employee other than the Contracting Officer directs a change in the work to be performed, it is the Contractor's responsibility to make inquiry of the Contracting Officer before making the deviation. Payments will not be made without being authorized by an appointed Contracting Officer with the legal authority to bind the Government.

5252.209-9300 ORGANIZATIONAL CONFLICTS OF INTEREST (JUN 1994)

(a) The restrictions described herein shall apply to the Contractor and its affiliates, consultants and subcontracts under this contract. If the Contractor under this contract prepares or assists in preparing a statement of work, specifications and plans, the Contractor and its affiliates shall be ineligible to bid or participate, in any capacity, in any contractual effort which is based on such statement of work or specifications and plans as a prime contractor, subcontractor, consultant or in any similar capacity. The Contractor shall not incorporate its products or services in such statement of work or specification unless so directed in writing by the Contracting Officer, in which case the restriction shall not apply. This contract shall include this clause in its subcontractor's or consultants' agreements concerning the performance of this contract.

5252.211-9301 PHASED CONSTRUCTION SCHEDULE (SEP 1996) [To be completed in each applicable task order]

Within the overall project schedule, commence and complete the work in phases. Complete each phase of the work within the number of calendar days stated in the following schedule.

a. Schedule start day: The day designated as the beginning of a particular phase; the number listed is the number of calendar days from the award of contract.

b. Completion day: The day designated as the beginning of a particular phase; the number listed is the number of calendar days from the award of contract.

c. Schedule:

Phase	Description	Schedule Start Day	Completion Day
A	[_____]	[_____]	[_____]
B	[_____]	[_____]	[_____]
C	Completion of remaining	[_____]	[_____]

[Contracting Officer insert start and completion day for each phase. The completion day of the last phase must be the same number as indicated in FAR 52.211-10, Commencement, Prosecution, and Completion of Work.]

d. If the work of a particular phase is complete and accepted before the scheduled completion day, immediately begin work on the subsequent phase unless otherwise restricted.

5252.228-9305 NOTICE OF BONDING REQUIREMENTS (DEC 2000)

(a) Within 15 days after receipt of task order award, the bidder/offeror to whom the award is made shall furnish the following bond(s) each with satisfactory security:

__X__ A Performance Bond (Standard Form 25). The performance bond shall be in a penal sum equal to 100% percent of the task order value.

__X__A Payment Bond (Standard Form 25A). The payment bond shall be in a penal sum equal to 100% of the task order value.

(b) Any surety company holding a certificate of authority from the Secretary of Treasury as an acceptable Surety on Federal bonds will be accepted. Individual sureties will be permitted as prescribed in FAR 28.203 and FAC 5252.228-9300. Alternative types of security in lieu of furnishing sureties on performance and/or payment bonds will be permitted as prescribed in FAR 28.204, and will be held for at least one year after the completion of the contract. Additional bond security may be required as prescribed in FAR 52.228-2. Bonds shall be accompanied by a document authenticating the agent’s authority to sign bonds for the surety company.
The contract time for purposes of fixing the completion date, default, and liquidated damages shall begin to run __*__days from the date of award, regardless of when performance and payment bonds or deposits in lieu of surety are executed.

* see individual task order for specific information.

(b) TAX RELIEF ALTERNATE I (JUN 1994).
By terms of the Agreement between the Government of Spain and the Government of the United States, the operations and expenditures of Contractors, their material suppliers and certain of their subcontractors made pursuant to a contract with the Government of the United States are relieved of Spanish taxation. These tax exemptions include but are not limited to import duties, transaction taxes, provincial and municipal taxes. In this connection, bidders are advised to consider Royal Decree 669/1986 dated 21 March which governs the matter of Value Added Tax exemption. An allowance for taxes which are properly assessable by the Government of Spain will be deemed to have been included in any bid submitted and the resulting contract price. See "TAXES - FOREIGN FIXED-PRICE CONTRACT" of the contract clauses for the Contractor's warranty regarding the inclusion of taxes in the contract price.

5252.236-9303 ACCIDENT PREVENTION (NOV 1998)

(a) The Contractor will maintain an accurate record of, and will report to the Contracting Officer in the manner and on the forms prescribed by the Contracting Officer, all accidents resulting in death, traumatic injury, occupational disease, and damage to property, materials, supplies and equipment incident to work performed under this contract.

(b) Compliance with the provisions of this article by subcontractors will be the responsibility of the Contractor.

(c) Prior to commencement of the work, the Contractor may be required to:

(1) submit in writing his proposals for effectuating provision for accident prevention;

(c) meet in conference with representatives of the Contracting Office to discuss and develop mutual understandings relative to administration of the overall safety program

5252.236-9304 UTILITIES FOR CONSTRUCTION AND TESTING (JUN 1994)

The Contractor shall be responsible for obtaining, either from available Government sources or local utility companies, all utilities required for construction and testing. The Contractor shall provide these utilities at his expense, paid for at the current utility rate delivered to the job site. The Contractor shall provide and maintain all temporary utility connections and distribution lines, and all meters required to measure the amount of each utility used.

5252.236-9305 AVAILABILITY OF UTILITIES (JUN 1994)

When available, the Government will furnish reasonable amounts of the following utilities for the work to be performed under this contract at no cost to the Contractor. Information concerning the location of existing outlets may be secured from the OIC. The Contractor shall provide and maintain, at his expense, the necessary service lines from existing Government outlets to the site of work.

Electric - Water - Compressed Air

Contractor Furnished Utilities. In the event that the Government is unable to provide the required types of utilities, the Contractor shall, at his expense, arrange for the required utilities.

Contractor Energy Conservation. The Contractor shall be directly responsible for instructing employees in utilities conservation practices. The Contractor shall be responsible for operating under conditions which preclude the waste of utilities, which shall include:

a. Lights shall be used only in areas where and at the time when work is actually being performed.

b. Mechanical equipment controls for heating, ventilation and air conditioning systems will not be adjusted by the workers.

c. Water faucets or valves shall be turned off after the required usage has been accomplished.
Telephone Lines. Telephone lines for the sole use of the contractor will not be available. Government telephones shall not be used for personal reasons.

Contractor Availability. The contractor shall maintain a telephone at which he or his representative may be reached 24 hours daily. The telephone shall be listed in the contractor's name. If the contractor does not have a local telephone, he shall maintain a toll free emergency telephone (or accept collect calls from authorized Government personnel) at which he or his representative may be reached at night, weekends and holidays. It is mandatory that the contractor or his representative be available to a toll-free telephone 24 hours per day, seven days per week, including holidays. He shall notify the OIC in writing of the mailing address and telephone number within three days after award of this contract and immediately thereafter in the event of change.

5252.236-9310 RECORD DRAWINGS (OCT 2004)

The Contractor shall maintain at the job site two sets of full-size prints of the contract drawings, accurately marked in red with adequate dimensions, to show all variations between the construction actually provided and that indicated or specified in the contract documents, including buried or concealed construction. Special attention shall be given to recording the horizontal and vertical location of all buried utilities that differ from the final government accepted

drawings. Existing utility lines and features revealed during the course of construction, shall also be accurately located and dimensioned. Variations in the interior utility systems shall be clearly defined and dimensioned; and coordinated with exterior utility connections at the building five-foot line, where applicable.
Existing topographic features which differ from those shown on the contract drawings shall also be accurately located and recorded. Where a choice of materials or methods is permitted herein, or where variations in scope or character of methods is permitted herein, or where variations in scope or character of work from that of the original contract are authorized, the drawings shall be marked to define the construction actually provided. The representations of such changes shall conform to standard drafting practice and shall include such supplementary notes, legends, and details as necessary to clearly portray the as-built construction. These drawings shall be available for review by the Contracting Officer at all times. Upon completion of the work, both sets of the marked up prints shall be certified as correct, signed by the Contractor, and delivered to the Contracting Officer for his approval before acceptance. Requests for partial payments will not be approved if the marked prints are not kept current, and request for final payment will not be approved until the marked prints are delivered to the Contracting
Officer.

(End of clause)

5252.237-9301 SUBSTITUTIONS OF KEY PERSONNEL (JUN 1994)

The Contractor shall provide complete resumes for proposed substitutes, and any additional information requested by the Contracting Officer. Proposed substitutes should have comparable qualifications to those of the persons being replaced. The Contracting Officer will notify the Contractor within 15 days after receipt of all required information of the consent on substitutes. No change in fixed unit prices may occur as a result of key personnel substitution.

5252.242-9300 GOVERNMENT REPRESENTATIVES (OCT 1996)

(a) The contract will be administered by an authorized representative of the Contracting Officer. In no event, however, will any understanding or agreement, modification, change order, or other matter deviating from the terms of the contract between the Contractor and any person other than the Contracting Officer be effective or binding upon the Government, unless formalized by proper contractual documents executed by the Contracting Officer prior to completion of this contract. The authorized representative as indicated hereinafter:

_X_(1) The Contracting Officer’s Representative (COR) will be designated by the Contracting Officer as the authorized representative of the Contracting Officer. The COR is responsible for monitoring performance and the technical management of the effort required hereunder, and should be contacted regarding questions or problems of a technical nature.

_X_(2) The designated Contract Specialist will be the Administrative Contracting Officer's representative on all other contract administrative matters. The Contract Specialist should be contacted regarding all matters pertaining to the contract or task/delivery orders.

_X_(3) The designated Property Administrator is the Administrative Contracting Officer's representative on property matters. The Property Administrator should be contacted regarding all matters pertaining to property administration.

5252.242-9305 PRE-PERFORMANCE CONFERENCE (JUL 1995)

Within 30 days of contract award, prior to commencement of the work, the Contractor will meet in conference with representatives of the Contracting Officer, at a time to be determined by the Contracting Officer, to discuss and develop mutual understanding relative to scheduling and administering work.

5252.245-9302 LIMITED ASSUMPTION OF RISK BY GOVERNMENT (JUN 1994)

(a) Title of all work in place shall be in the Government, and title to all property intended for incorporation in the work shall vest in the Government upon delivery thereof to the site of the work. The term "Government-owned property" as used in this clause refers to such work in place and to such other property as to which title has vested in the Government and includes any property furnished or rented to the Contractor by the Government. Upon completion of the work, any such Government-owned property not a part of the work (except property rented to, or furnished without charge to the Contractor by the Government) shall become the property of the Contractor. The vesting of title in the Government, as provided in this paragraph, shall in no way relieve the Contractor of any obligations otherwise provided in this contract in respect to such Government-owned property except as expressly stated in paragraph (b) of this clause.

(b) The Contractor represents that the contract price does not include the cost of insurance, nor any provision for a reserve, covering the risk assumed by the Government under this paragraph.
The Government assumes the risk of loss or damage to such Government-owned property (including expenses incidental to such loss or damage) which results directly or indirectly from the explosion of Government-owned or controlled munitions (including, without limitations, ammunition, bombs, powder, dynamite and other explosives), whether or not caused by negligence, except that the Government does not assume at any time the risk of, and the Contractor shall be responsible for, such loss or damage (1) which is in fact covered by insurance or for which Contractor is otherwise reimbursed, or (2) which results from disregard of proper instructions of the Contracting Officer, on the part of any of the Contractor's directors, officers or any other representatives having supervision or direction of all or substantially all the Contractor's operations under this contract.

(c) In the event of loss or damage to Government-owned property resulting from the risk assumed by the Government hereunder, the Contracting Officer shall determine whether, and to what extent, such property shall be rebuilt, repaired or replaced by the Contractor or otherwise. Should this determination cause an increase or decrease in the cost of doing the work under this contract or time required for its performance, an equitable adjustment shall be made as provided in the changes clause of the contract.

(d) The provisions contained in the statement of work under "Permits and Responsibilities," are to be deemed modified by this clause only to the extent required to give effect to the limited assumption of risk provided in this clause.

Section 00800 - Special Contract Requirements

1. Contract Type

This is an IDIQ contract with no pre-established fixed contract prices. The actual amount of work to be performed and the time of such performance will be determined by the Contracting Officer or his properly authorized representative who will issue written task orders to the Contractor. Award of task orders will be on a firm fixed price basis.

2. Contract Content

The contract includes the solicitation in its entirety, including all amendments issued during the proposal preparation period, evaluation, and selection, and the successful Offerors’ accepted proposals. The contract constitutes and defines the entire agreement between the contractor and the Government. No documentation shall be omitted which in any way bears upon the terms of that agreement. Acceptance of the proposal documents in making the contract award shall not be construed as a waiver of any RFP requirements.

Clauses specific to each task order that require fill-in or emphasis are provided with each Task Order RFP. All other terms and conditions identified in the basic contract are in full force by reference in the task order.

3. Term of the Contract

The basic contract period will be 12 months (or earlier as determined by the Contracting Officer after the maximum contract amount of $25 million is ordered by the Government).

4. Options

The contract contains four (4) 12-month options for a total maximum duration of 60 months or a value of $25 million, whichever occurs first. The Government has the option to extend the term of the contract in accordance with the FAR 52.217-9, Option to Extend the Term of the Contract. The Government may extend the term of this contract by written notice to the Contractor within the period specified in the Schedule, provided that the Government gives the Contractor a preliminary notice of its intent to extend before the contract expires. The preliminary notice does not commit the Government to an extension.

5. Minimum Guarantee

The only work authorized under this contract is that which is ordered by the Government through issuance of a task order. The Government makes no representation as to the number of task orders or actual amount of work to be ordered during the performance period of the contract. The minimum guarantee for the offeror awarded the contract is $5,000.

6. Commencement of Work

No work under this contract will commence until such time as the Contracting Officer issues a task order, either in writing or orally. Oral task orders will be confirmed by the issuance of a written task order within five working days.

7. Security Requirements

The Contractor shall be responsible for furnishing each employee, and for requiring that each employee engaged in the project, display such identification as may be approved and directed by the Contracting Officer.
Every employee of the prime contractor, all subcontractor employees, and all material suppliers' employees, who require access to the base for any reason and for any length of time will be required to obtain a base access pass.

Contractor Employee Base Access Pass
The Contractor shall be responsible for furnishing and requiring that each person employed in connection with this contract or any subcontract hereunder, be provided with a valid/current Contractor Employee Base Access Pass. All prescribed identification shall be immediately delivered and/or surrendered to the Contracting Officer for cancellation upon:
a. Termination or release of any employee;
b. Termination or completion of contract.

Responsibility for Physical Security
The Contractor shall be responsible for physical security of all materials, supplies, and equipment of every description (including property which may be Government furnished or owned) provided and/or utilized in the execution of this contract.

Employment
Should the continued employment of any person in connection with this contract, or any subcontract thereunder, be deemed by the Contracting Officer to be prejudicial to the interests of the Government, that person shall immediately be removed from the work. In this connection the Contractor agrees that:

a. Cases which may involve disciplinary action against such persons, or the necessity of reassignment or termination of their services, shall be investigated, processed, reported and disposed of, as directed by the Contracting Officer.

b. Employment contracts of all persons employed in connection with this contract, or any subcontract thereunder shall include clauses containing the substance of this clause.

Compliance with the foregoing provisions of this clause by subcontractors shall be the responsibility of the Contractor.

8. Place of Performance
The place of performance will be designated on each task order.

9. Proposal Preparation Costs

The costs for preparation of task order proposals shall be the responsibility of the Contractor and not directly reimbursable. Each task order awarded will include at a minimum all labor wages, management, supervision, mobilization, material and equipment costs. The Contractor shall furnish all project management, planning, estimating, labor, transportation, materials, equipment, tools, supervision, design if applicable, and all other associated costs necessary to fulfill the requirements of the task order.

10. Task Order Performance Period

FAR 52.211-10, Commencement, Prosecution and Completion of Work will be incorporated into each task order to identify the construction schedule for the specific project. The Government reserves the right to negotiate a task order's performance period if determined to be in the best interest of the Government.

11. Liquidated Damages
FAR 52.211-12, Liquidated Damages – Construction, will be incorporated into task orders identifying the liquidated damages rate applicable to that task order.

12. Subcontracting Responsibilities

The Contractor shall be responsible for the management and performance of all subcontracts. The Contractor shall ensure task orders are completed within the stated requirements.

13. Supervision

The Contractor shall provide supervision in accordance with FAR 52.236-6, Superintendence by the Contractor, for each task order.

14. Notice of Constructive Changes

No order, statement or direction of the Contracting Officer, an authorized representative of the Contracting Officer whether or not acting within the limits of his authority, or any other representative of the Government, shall constitute a change order under the "Changes" clause of this contract or entitle the contractor(s) to an equitable adjustment of the price or delivery schedule, unless such a change is issued in writing and signed by the Contracting Officer.

15. Payments

Designated paying office will be determined at award of individual task orders under this contract. Invoicing procedures will be stated in each task order and percentage of performance payments will be processed through the designated Administrative Contracting Officer. Invoices shall be submitted to the office identified in Block 7 of the DD Form 1155. Ensure both the Contract number and the Task Order number is included on the invoice.

16. Performance Evaluations

At the conclusion of each task order, the Administrative Contract Office will complete a Contractor's performance evaluation and input into CCASS/ACASS. The evaluation will take into account all aspects of the Contractor's performance. Performance evaluations may be completed at any time the Contactor's performance is considered less than satisfactory. Contractors will be provided the performance evaluation through the online CCASS/ACASS system and an opportunity to comment on the evaluation. The performance evaluations may have an impact on the award of future task orders. Each contractor employee accessing CPARS, ACASS, or CCASS will be required to present a valid DoD Public Key Infrastructure (PKI) certificate. For information regarding obtaining PKI certificates visit http://www.cpars.navy.mil/pki_info.htm. A list of approved External Certificate Authority (ECA) vendors is provided.

SECTION J

INDEX OF DOCUMENTS

LIST OF DOCUMENTS, EXHIBITS, AND OTHER ATTACHMENTS

J-1	EXHIBIT LINE ITEMS
J-2	APPLICABLE PUBLICATIONS AND STANDARDS
SECTION 02 41 00	DEMOLITION
SECTION 03 31 01.00 10	CAST IN PLACE CONCRETE (MINOR CONSTRUCTION)
SECTION 03 33 00	CAST-IN-PLACE ARCHITECTURAL CONCRETE
SECTION 03 52 00	LIGHTWEIGHT CONCRETE ROOF INSULATION
SECTION 05 50 13	MISCELLANEOUS METAL FABRICATIONS
SECTION 07 32 13	ROOF TILES
SECTION 07 41 13	METAL ROOF PANELS
SECTION 07 52 00	MODIFIED BITUMINOUS MEMBRANE ROOFING
SECTION 07 54 19	POLYVINYL CHLORIDE (PVC) ROOFING
SECTION 07 55 00	PROTECTED MEMBRANE ROOFING
SECTION 07 57 13	SPRAYED POLYURETHANE FOAM (SPF) ROOFING
SECTION 07 60 00	FLASHING AND SHEET METAL
SECTION 07 92 00	SEALANTS
SECTION 09 90 00	PAINTS AND COATINGS
SECTION 31 00 00	EARTHWORK
SECTION 31 23 00.00 20	EXCAVATION AND FILL
SECTION 32 01 16.17	COLD MILLING OF BITUMINOUS PAVEMENTS
SECTION 32 01 22	BITUMINOUS REJUVENATION: SLURRY SEAL
SECTION 32 11 24	GRADED CRUSHED AGGREGATE BASE COURSE FOR FLEXIBLE PAVEMENT
SECTION 32 12 10	BITUMINOUS TACK COATS AND PRIME COATS
SECTION 32 12 11	BITUMINOUS SURFACE TREATMENT
SECTION 32 12 17	HOT MIX BITUMINOUS PAVEMENT
SECTION 32 17 23.00 20	PAVEMENT MARKINGS
SECTION 33 40 01	STORM DRAINAGE
J-3	DRAWINGS AND SKETCHES

EXHIBIT LINE ITEM NUMBERS					
SOLICITATION NO. N33191-15-R-XXXX					
PROVIDE UNIT PRICES FOR INDEFINITE DELIVERY INDEFINITE QUANTITY WORK					
ELINs A700 through A1001					
Base Period - Indefinite Quantity Work					
ELIN	**SHORT DESCRIPTION**	**FULL DESCRIPTION**	**EST QTY**	**UNIT OF ISSUE**	**UNIT PRICE (USD)**
A700	**Demolition and Removal of Bituminous Asphalt Pavement**	The Contractor shall perform the demolition and removal of existing bituminous asphalt pavement. The asphalt pavement shall be saw cut, to a minimum depth of 10 cm, extending out 30.5 cm beyond the edge of the aggregate base to be removed. All saw cuts shall be made with vertical straight faces making one pair of faces at right angles to traffic flow. Typical details are shown on contract drawing PLATE # 10. Broken pavement, debris and resulting loose material shall be removed from limits of the station daily. All work shall be performed in accordance with Sections 01 57 19.00 20 - "Temporary Environmental Controls" & 02 41 00 - "Demolition". Unit of measurement shall be square meters (SM), as computed by multiplying, in meters, area length by width (L x W). Dimensions and locations will be specified on the task order.	7,500	SM	
A701	**Demolition and Removal of Aggregate Base**	The Contractor shall perform the demolition and removal of existing aggregate to a minimum depth of 20 cm. Typical details will be provided with each task order. Debris and resulting loose material shall be removed from limits of the station daily. All work shall be performed in accordance with Sections 01 57 19.00 20 - "Temporary Environmental Controls" & 02 41 00 - "Demolition". Unit of measurement shall be cubic meters (CM), as computed by multiplying, in meters, area length by width by depth (L x W x D). Dimensions and locations will be specified on the task order.	1,875	CM	
A702	**Removal and Reinstallation or Disposal of Concrete Wheel Stops**	The Contractor shall perform the removal and reinstallation or disposal of existing concrete wheel stops. All work shall be performed in accordance with Sections 01 57 19.00 20 - "Temporary Environmental Controls" & 02 41 00 - "Demolition". Unit of measurement shall be Each (EA). Units and locations will be specified on the task order.	100	EA	
A703	**Demolition and Removal of Concrete Curbs**	The Contractor shall perform the demolition and removal of existing pre-cast concrete curbs. All work shall be performed in accordance with Section 01 57 19.00 20 - "Temporary Environmental Controls" & 02 41 00 - "Demolition". Unit of measurement shall be linear meters (LM). Units and locations will be specified on the task order.	125	LM	
A704	**Demolition and Removal of Storm Drainage Headwalls**	The Contractor shall perform the demolition and removal of existing storm drainage headwalls. Broken concrete, debris and resulting loose material shall be removed from limits of the station daily. All work shall be performed in accordance with Section 01 57 19.00 20 - "Temporary Environmental Controls" & 02 41 00 - "Demolition". Unit of measurement shall be Each (EA). Units and locations will be specified on the task order.	4	EA	
A705	**Demolition and Removal of Concrete Pipe Culverts**	The Contractor shall perform the removal of existing pipe culverts. Old culvert pipe, debris and resulting loose material shall be removed from limits of the station daily. All work shall be performed in accordance with Section 01 57 19.00 20 - "Temporary Environmental Controls" & 02 41 00 - "Demolition". Unit of measurement shall be linear meters (LM). Units and locations will be specified on the task order.	100	LM	

ELIN	SHORT DESCRIPTION	FULL DESCRIPTION	EST QTY	UNIT OF ISSUE	UNIT PRICE (USD)
A706	**Demolition and Removal of Concrete Sidewalks**	The Contractor shall perform demolition and removal of existing concrete sidewalks, all as indicated on the contract task order and site plans (as applicable). Where required and indicated, concrete shall be saw cut. Typical details will be provided with each task order. Broken concrete, debris and resulting loose material shall be removed from limits of the station daily. All work shall be performed in accordance with Sections 01 57 19.00 20-"Temporary Environmental Controls" & 02 41 00-"Demolition". Unit of measurement shall be square meters (SM), as computed by multiplying, in meters, area length by width (L x W) considering an average depth of 0.1m . Dimensions and locations will be specified on the task order.	1,500	SM	
A707	**Cold Milling of Bituminous Asphalt Pavements**	The Contractor shall perform cold milling 6 cm depth on existing bituminous asphalt pavement. All debris and resulting loose milled material shall be removed from limits of the station daily. All work shall be performed in accordance with Sections 32 0116 17 - "Cold Milling". This ELIN# may be ordered in conjunction with work ordered under ELIN's #A735. Unit of measurement shall be square meters (SM), as computed by multiplying, in meters, area length by width (L x W). Dimensions and locations will be specified on the task order.	6,800	SM	
A708	**Earthwork for Construction of Bituminous Asphalt Pavements**	The Contractor shall perform the general earthwork required for the construction of bituminous asphalt paved roads and parking lots. The work includes performing site preparation, excavation, compaction, removal of excess material and grading, all as necessary to construct bituminous asphalt paved roads, and parking lots at the finished grade and elevations indicated. Typical details are shown on contract drawing PLATE #'s 7 & 8. All work shall be performed in accordance with Section 31 23 00.00 20 - "Excavation and Fill". Unit of measurement shall be cubic meters (CM), as computed by multiplying, in meters, area length by width by depth (L x W x D). Dimensions, slopes and finished grade will be specified on the task order.	1,700	CM	
A709	**Earthwork for Storm Sewer Pipe (4 meter max. depth)**	The Contractor shall perform the general excavation required for the installation storm drainage pipe. The work includes performing site preparation, excavation, installation of granular pipe bedding, backfill, compacting, removal of excess material and grading, all as necessary to install storm sewer pipe and other related appurtenances at the finished grade and elevations indicated. Maximum depth shall be 4 meter. Typical details are shown on contract drawing PLATE # 1. All work shall be performed in accordance with Section 31 23 00.00 20 - "Excavation and Fill". Unit of measurement shall be cubic meters (CM), as computed by multiplying, in meters, length by width by depth (L x W x D). Dimensions, slopes and finished grade will be specified on the task order.	150	CM	

ELIN	SHORT DESCRIPTION	FULL DESCRIPTION	EST QTY	UNIT OF ISSUE	UNIT PRICE (USD)
A710	**Earthwork for Storm Sewer Manholes (4 meter max. depth)**	The Contractor shall perform the general excavation required for the construction of storm sewer manholes. The work includes performing site preparation, excavation, backfill, compacting, removal of excess material and grading, all as necessary to install storm sewer manholes at the finished grade and elevations indicated. Maximum depth shall be 4 meter. Typical details are shown on contract drawing PLATE # 2. All work shall be performed in accordance with Section 31 23 00.00 20 - "Excavation and Fill". Unit of measurement shall be cubic meters (CM), as computed by multiplying, in meters, length by width by depth (L x W x D). Dimensions, slopes and finished grade will be specified on the task order.	60	CM	
A711	**Earthwork For Storm Drainage Channels/Reshaping (4 meter max. depth)**	The Contractor shall perform the general excavation required for the construction of storm drainage channels. The work includes performing site preparation, excavation for new channel and reshaping for old channel, backfill, compaction, installation of organic mat, removal of excess material and grading, all as necessary to construct storm drainage channels at the finished grade and elevations indicated. Typical details are shown on contract drawing PLATE # 3. All work shall be performed in accordance with Section 31 23 00.00 20 - "Excavation and Fill". Unit of measurement shall be cubic meters (CM), as computed by multiplying, in meters, length by width by depth (L x W x D). Dimensions, slopes and finished grade will be specified on the task order.	150	CM	
A712	**Earthwork for Construction of Sidewalks**	The Contractor shall perform the general earthwork required for the construction of concrete sidewalks. The work includes performing site preparation, excavation, compaction, and removal of excess material and grading, all as necessary to construct concrete sidewalks at the finished grade and elevations indicated. Typical details are shown on contract drawing PLATE #'18. All work shall be performed in accordance with Section 31 00 00 -"Earthwork". Unit of measurement shall be square meters (SM), as computed by multiplying, in meters, area length by width (L x W) considering an average depth of 0.1m . Dimensions and locations will be specified on the task order.	1,500	SM	
A713	**Concrete Storm Sewer Pipe (Ø20 cm)**	The Contractor shall perform the installation of 20 cm. diameter concrete storm drainage pipe. The work includes providing granular pipe bedding material, concrete storm drainage pipe, fittings and joints at the finished grade and elevations indicated. Typical details are shown on contract drawing PLATE # 1. All work shall be performed in accordance with Sections 31 23 00.00 20 - "Excavation and Fill" and 33 40 01 - "Storm Drainage". Unit of measurement shall be linear meters (LM). Dimensions, slopes and locations will be specified on the task order.	50	LM	
A714	**Concrete Storm Sewer Pipe (Ø30 cm)**	The Contractor shall perform the installation of 30 cm. diameter concrete storm drainage pipe. The work includes providing granular pipe bedding material, concrete storm drainage pipe, fittings and joints at the finished grade and elevations indicated. Typical details are shown on contract drawing PLATE # 1. All work shall be performed in accordance with Sections 31 23 00.00 20 - "Excavation and Fill" and 33 40 01 - "Storm Drainage". Unit of measurement shall be linear meters (LM). Dimensions, slopes and locations will be specified on the task order.	50	LM	

ELIN	SHORT DESCRIPTION	FULL DESCRIPTION	EST QTY	UNIT OF ISSUE	UNIT PRICE (USD)
A715	**Concrete Storm Sewer Pipe (Ø40 cm)**	The Contractor perform the installation of 40 cm. diameter concrete storm drainage pipe. The work includes providing granular pipe bedding material, concrete storm drainage pipe, fittings and joints at the finished grade and elevations indicated. Typical details are shown on contract drawing PLATE # 1. All work shall be performed in accordance with Sections 31 23 00.00 20 - “Excavation and Fill” and 33 40 01 - “Storm Drainage”. Unit of measurement shall be linear meters (LM). Dimensions, slopes and locations will be specified on the task order.	50	LM	
A716	**Concrete Storm Sewer Pipe (Ø50 cm)**	The Contractor shall perform the installation of 50 cm. diameter concrete storm drainage pipe. The work includes providing granular pipe bedding material, concrete storm drainage pipe, fittings and joints at the finished grade and elevations indicated. Typical details are shown on contract drawing PLATE # 1. All work shall be performed in accordance with Sections 31 23 00.00 20 - “Excavation and Fill” and 33 40 01 - “Storm Drainage". Unit of measurement shall be linear meters (LM). Dimensions, slopes and locations will be specified on the task order.	50	LM	
A717	**Concrete Storm Sewer Pipe (Ø60 cm)**	The Contractor shall perform the installation of 60 cm. diameter concrete storm drainage pipe. The work includes providing granular pipe bedding material, concrete storm drainage pipe, fittings and joints at the finished grade and elevations indicated. Typical details are shown on contract drawing PLATE # 1. All work shall be performed in accordance with Sections 31 23 00.00 20 - “Excavation and Fill” and 33 40 01 - “Storm Drainage”. Unit of measurement shall be linear meters (LM). Dimensions, slopes and locations will be specified on the task order.	50	LM	
A718	**PVC Storm Sewer Pipe (Ø12.5 cm)**	The Contractor shall perform the installation of 12.5 cm. diameter PVC storm drainage pipe. The work includes providing granular pipe bedding material, PVC storm drainage pipe, fittings and joints at the finished grade and elevations indicated. Typical details are shown on contract drawing PLATE # 3. All work shall be performed in accordance with Sections 31 23 00.00 20 - “Excavation and Fill” and 33 40 01 - “Storm Drainage”. Unit of measurement shall be linear meters (LM). Dimensions, slopes and locations will be specified on the task order.	50	LM	
A719	**PVC Storm Sewer Pipe (Ø16 cm)**	The Contractor shall perform the installation of 16 cm. diameter PVC storm drainage pipe. The work includes providing granular pipe bedding material, PVC storm drainage pipe, fittings and joints at the finished grade and elevations indicated. Typical details are shown on contract drawing PLATE # 3. All work shall be performed in accordance with Sections 31 23 00.00 20 - “Excavation and Fill” and 33 40 01 - “Storm Drainage”. Unit of measurement shall be linear meters (LM). Dimensions, slopes and locations will be specified on the task order.	50	LM	
A720	**PVC Storm Sewer Pipe (20 cm)**	The Contractor shall perform the installation of 20 cm. diameter PVC storm drainage pipe. The work includes providing granular pipe bedding material, PVC storm drainage pipe, fittings and joints at the finished grade and elevations indicated. Typical details are shown on contract drawing PLATE # 3. All work shall be performed in accordance with Sections 31 23 00.00 20 - “Excavation and Fill” and 33 40 01 - “Storm Drainage”. Unit of measurement shall be linear meters (LM). Dimensions, slopes and locations will be specified on the task order.	50	LM	

ELIN	SHORT DESCRIPTION	FULL DESCRIPTION	EST QTY	UNIT OF ISSUE	UNIT PRICE (USD)
A721	**PVC Storm Sewer Pipe (Ø25 cm)**	The Contractor shall perform the installation of 25 cm. diameter PVC storm drainage pipe. The work includes providing granular pipe bedding material, PVC storm drainage pipe, fittings and joints at the finished grade and elevations indicated. Typical details are shown on contract drawing PLATE # 1. All work shall be performed in accordance with Sections 31 23 00.00 20 - "Excavation and Fill" and 33 40 01 - "Storm Drainage". Unit of measurement shall be linear meters (LM). Dimensions, slopes and locations will be specified on the task order.	50	LM	
A722	**PVC Storm Sewer Pipe (Ø31.5 cm)**	The Contractor shall perform the installation of 31.5 cm. diameter PVC storm drainage pipe. The work includes providing granular pipe bedding material, PVC storm drainage pipe, fittings and joints at the finished grade and elevations indicated. Typical details are shown on contract drawing PLATE # 1. All work shall be performed in accordance with Sections 31 23 00.00 20 - "Excavation and Fill" and 33 40 01 - "Storm Drainage". Unit of measurement shall be linear meters (LM). Dimensions, slopes and locations will be specified on the task order.	50	LM	
A723	**PVC Storm Sewer Pipe (Ø40 cm)**	The Contractor shall perform the installation of 40 cm. diameter PVC storm drainage pipe. The work includes providing granular pipe bedding material, PVC storm drainage pipe, fittings and joints at the finished grade and elevations indicated. Typical details are shown on contract drawing PLATE # 1. All work shall be performed in accordance with Sections 31 23 00.00 20 - "Excavation and Fill" and 33 40 01 - "Storm Drainage". Unit of measurement shall be linear meters (LM). Dimensions, slopes and locations will be specified on the task order.	50	LM	
A724	**Construct Storm Drainage Headwalls**	The Contractor shall perform the construction of reinforced concrete headwalls. The work includes performing site preparation, excavation and /or fill, forming, reinforcement, concrete placement, backfill, compaction, removal of excess material and grading, all as necessary to construct concrete storm drainage headwalls at the finished grades and elevations indicated. Typical details are shown on contract drawing PLATE # 5. All work shall be performed in accordance with Sections 31 23 00.00 20 - "Excavation and Fill", 33 40 01 - "Storm Drainage", and 03 33 00 -"Cast-In-Place Architectural Concrete". Unit of measurement shall be Each (EA). Units and locations will be specified on the task order.	4	EA	
A725	**Install Pre-Cast Storm Sewer Manhole (0 - 1 meter depth)**	The Contractor shall perform the installation of pre-cast concrete storm sewer manholes. The work includes supply, delivery and installation of pre-cast concrete manholes, including manhole base, riser, eccentric cone, frames and covers, as applicable, and connection of pipe, all as necessary for the construction of concrete storm drainage manholes at the finished grades and elevations indicated. Typical details are shown on contract drawing PLATE # 2. All work shall be performed in accordance with Sections 31 23 00.00 20 - "Excavation and Fill", 33 40 01 - "Storm Drainage", 03 33 00 -"Cast-In-Place Architectural Concrete". Unit of measurement shall be EA (EA). Units and locations will be specified on the task order.	5	EA	

ELIN	SHORT DESCRIPTION	FULL DESCRIPTION	EST QTY	UNIT OF ISSUE	UNIT PRICE (USD)
A726	**Install Pre-Cast Storm Sewer Manhole (1 - 3 meter depth)**	The Contractor shall perform the installation of pre-cast concrete storm sewer manholes. The work includes supply, delivery and installation of pre-cast concrete manholes, including manhole base, riser, eccentric cone, frames and covers, as applicable, and connection of pipe, all as necessary for the construction of concrete storm drainage manholes at the finished grades and elevations indicated. Typical details are shown on contract drawing PLATE # 2. All work shall be performed in accordance with Sections 31 23 00.00 20 - "Excavation and Fill", 33 40 01 - "Storm Drainage", 03 33 00 -"Cast-In-Place Architectural Concrete". Unit of measurement shall be Each (EA). Units and locations will be specified on the task order.	5	EA	
A727	**Install Pre-cast Concrete Storm Drainage Catch Basin**	The Contractor shall perform the installation of pre-cast concrete storm drainage catch basins. The work includes excavation, supply, delivery and installation of pre-cast concrete catch basins, including base, riser, frames and grating, as applicable, and connection to piping, all as necessary for the construction of concrete storm drainage catch basins at the finished grades and elevations indicated. Typical details are shown on contract drawing PLATE # 6. All work shall be performed in accordance with Sections 31 23 00.00 20 - "Excavation and Fill", 33 40 01 - "Storm Drainage". Unit of measurement shall be Each (EA). Units and locations will be specified on the task order.	6	EA	
A728	**Construct Brick Storm Drainage Catch Basin**	The Contractor shall perform the fabrication of brick storm drainage catch basins. The work includes excavation, brick work, armored concrete base, riser, walls, patching and finish, frames and grating, as applicable, and connection to piping, all as necessary for the construction of brick storm drainage catch basins at the finished grades and elevations indicated. All work shall be performed in accordance with Sections 31 23 00.00 20 - "Excavation and Fill", 33 40 01 - "Storm Drainage". Unit of measurement shall be Each (EA). Units and locations will be specified on the task order.	12	EA	
A729	**Install Rip-Rap Storm Drainage Channel Lining**	The Contractor shall install rip-rap storm drainage channel lining. The work includes supply, delivery and installation of rip-rap channel lining. Typical detail is shown on contract drawing PLATE # 4. All work shall be performed in accordance with Sections 31 23 00.00 20 - "Excavation and Fill", 33 40 01 - "Storm Drainage", and 03 33 00 -"Cast-In-Place Architectural Concrete". Unit of measurement shall be square meters (SM), as computed by multiplying, in meters, area length by width, (L x W). Dimensions and locations will be specified on the task order.	50	SM	
A730	**Up-rise Manhole**	The Contractor shall perform the uprising of manhole. The work includes performing removal of frame and cover, bricks placement, reinstallation of frame and cover, removal of excess material and grading, all as necessary to up-rise manhole at the finished grades and elevations indicated. Typical details are shown on contract drawing PLATE # 2. All work shall be performed in accordance with Section 33 40 01 - "Storm Drainage Utilities". Unit of measurement shall be Each (EA). Units and locations will be specified on the task order.	5	EA	

ELIN	SHORT DESCRIPTION	FULL DESCRIPTION	EST QTY	UNIT OF ISSUE	UNIT PRICE (USD)
A731	**Up-rise Drainage Grate**	The Contractor shall perform the uprising of drainage grate. The work includes performing removal of frame and grate, bricks placement, reinstallation of frame and grate, removal of excess material and grading, all as necessary to up-rise drainage grate at the finished grades and elevations indicated. Typical details are shown on contract drawing PLATE # 6. All work shall be performed in accordance with Section 33 40 01 - "Storm Drainage". Unit of measurement shall be Each (EA). Units and locations will be specified on the task order.	5	EA	
A732	**Up-rise Valve or Meter Cover**	The Contractor shall perform the uprising of valve/meter cover. The work includes performing removal of frame and cover, bricks placement, reinstallation of frame and cover, removal of excess material and grading, all as necessary to up-rise frame and cover at the finished grades and elevations indicated. All work shall be performed in accordance with Section 33 40 01 - "Storm Drainage Utilities". Unit of measurement shall be Each (EA). Units and locations will be specified on the task order.	5	EA	
A733	**Aggregate Sub-Base Course for Bituminous Asphalt Pavements**	The Contractor shall perform the placement of crushed aggregate sub-base course for the bituminous asphalt pavement. The work includes performing site preparation, scarifying existing sub-grade, placement of ZA-40 aggregate sub-base, grading and compaction, as necessary for the construction of bituminous asphalt pavement. Minimum sub-base thickness for bituminous asphalt pavement shall be 20 cm compacted to 98% modified proctor density. When damage affects the base and sub-base courses, the damaged courses shall be entirely replaced with new material, which shall match the existing. Typical details are shown on contract drawing PLATE #"s 7, 8 & 10. All work shall be performed in accordance with Section 32 11 24 - "Graded Crushed Aggregate Base Course for Flexible Pavement". Unit of measurement shall be cubic meters (CM), as computed by multiplying, in meters, area length by width by depth, (L x W x D). Dimensions will be specified on the task order.	3,750	CM	
A734	**Aggregate Base Course for Bituminous Asphalt Pavements and Concrete Sidewalks**	The Contractor shall perform the placement of aggregate base course for bituminous asphalt pavement and concrete sidewalks. The work includes performing site preparation, placement of ZA-25 aggregate base, grading and compaction, as necessary for the construction of the bituminous asphalt pavement and concrete sidewalks. Minimum base thickness for bituminous asphalt pavement shall be 20cm compacted to 100% modified proctor density. Minimum base thickness for concrete sidewalks shall be 10 cm compacted to 98% modified proctor density. When damage affects the base and sub-base courses, the damaged courses shall be entirely replaced with new material. Typical details are shown on contract drawing PLATE #"s 7, 8, 10 & 18. All work shall be performed in accordance with Section 32 11 24 - "Graded Crushed Aggregate Base Course for Flexible Pavement". Unit of measurement shall be cubic meters (CM), as computed by multiplying, in meters, area length by width by depth, (L x W x D). Dimensions will be specified on the task order.	5,250	CM	

ELIN	SHORT DESCRIPTION	FULL DESCRIPTION	EST QTY	UNIT OF ISSUE	UNIT PRICE (USD)
A735	**Bituminous Asphalt Pavement Crack Sealing**	The Contractor shall perform crack repair in existing asphalt pavements. The work includes site preparation, cleaning and sealing of cracks by application of hot-poured asphalt cement or bitumen sealant. Typical details are shown on contract drawing PLATE # 9. All work shall be performed in accordance with Section 32 12 11 - "Bituminous Surface Treatment" or Section 32 01 22 "Bituminous Rejuvenation: Slurry Seal". Unit of measurement shall be linear meters (LM), as computed by measurement, in meters, area length (L). Work ordered under this ELIN may be in conjunction with work ordered under ELINS # A738 or #A739.	375	LM	
A736	**Bituminous Asphalt Pavement Repair**	The Contractor shall perform repair of existing bituminous asphalt pavement. The work includes surface preparation, supply, delivery and placement of 10cm compacted hot bituminous asphalt cement and primer coat. Typical details are shown on contract drawing PLATE #10. All work shall be performed in accordance with Section 32 12 17 - "Hot Mix Bituminous Pavement" and Section 32 12 10 – "Bituminous Tack and Prime Coats". Unit of measurement shall be square meters (SM), as computed by multiplying, in meters, area length by width, (L x W).	6,300	SM	
A737	**Bituminous Asphalt Pavement Overlay**	The Contractor shall perform the application of bituminous asphalt pavement overlay to the existing pavement. The work includes surface preparation, supply, delivery, placement of 6 cm compacted hot bituminous asphalt cement D 12 wearing coat and tack coat. Typical details are shown on contract drawing PLATE # 11. All work shall be performed in accordance with Sections 32 12 17 - "Hot Mix Bituminous Pavement" and Section 32 12 10 – "Bituminous Tack and Prime Coats". Unit of measurement shall be square meters (SM), as computed by multiplying, in meters, area length by width, (L x W). Work ordered under this ELIN may be in conjunction with work ordered under ELIN's # A707	10,300	SM	
A738	**Bituminous Asphalt Pavement Slurry Seal**	The Contractor shall perform the application of slurry seal on existing pavement. The work includes all labor, materials, equipment, supervision and transportation required to perform the application of asphalt slurry seal to existing asphalt pavement. The work includes surface preparation, and application of asphalt slurry seal. Typical details are shown on contract drawing PLATE # 17. All work shall be performed in accordance with Sections 32 12 17 -"Bituminous Hot Mix Pavement" and 32 01 22 - "Bituminous Rejuvenation: Slurry Seal". Unit of measurement shall be square meters (SM), as computed by multiplying, in meters, area length by width, (L x W). Dimensions will be specified on the task order. Work ordered under this ELIN may be in conjunction with work ordered under ELINS # A735 and/or #A736.	1,500	SM	

ELIN	SHORT DESCRIPTION	FULL DESCRIPTION	EST QTY	UNIT OF ISSUE	UNIT PRICE (USD)
A739	**Bituminous Asphalt Pavement Surface Treatment**	The Contractor shall perform treatment on the bituminous asphalt pavement. The work includes all labor, materials, equipment, supervision and transportation required to perform the application of bituminous surface treatment. The work includes surface preparation and application of bituminous surface treatment. Typical details are shown on contract drawing PLATE # 17. All work shall be performed in accordance with Sections 32 12 17 Hot Mix Bituminous Pavement & Section 32 12 11-"Bituminous Surface Treatment". Unit of measurement shall be square meters (SM), as computed by multiplying, in meters, area length by width, (L x W). Dimensions will be specified on the task order. Work ordered under this ELIN may be in conjunction with work ordered under ELINS # A735 and/or #A736.	15,300	SM	
A740	**New Bituminous Asphalt Pavement**	The Contractor shall perform the application of new bituminous asphalt pavement. The work includes surface preparation, supply, delivery, placement of a 6 cm compacted bituminous asphalt pavement S 20 binder course, primer coat, 4 cm compacted bituminous asphalt pavement D 12 wearing course, and tack coat. Typical details are shown on contract drawing PLATE #'s 7 & 8. All work shall be performed in accordance with Section 32 12 17 - "Hot Mix Bituminous Pavement". Unit of measurement shall be square meters (SM), as computed by multiplying, in meters, area length, by width, (L x W). Dimensions will be specified on the task order. Work ordered under this ELIN may be in conjunction with work ordered under ELIN's #A700, A708,& A734.	20,300	SM	
A741	**Obliteration of Existing Bituminous Asphalt Pavement Road Markings**	The Contractor shall perform the obliteration of existing road markings. All work shall be performed in accordance with Section 32 17 23.00 20-"Pavement Markings". Unit of measurement shall be square meters (SM) of painted area, as computed by multiplying, in meters, area length, by width, (L x W). Dimensions and locations will be specified on the task order.	850	SM	
A742	**Paint Solid Pavement Lines**	The Contractor shall perform the painting of solid pavement lines. The work includes surface preparation and painting of 10 cm wide solid pavement lines. Application of this ELIN will be used for pavement lateral lines, parking stall and diagonal no-parking lines. All work shall be performed in accordance with Section 32 17 23.00 20 -"Pavement Markings". Unit of measurement shall be linear meters (LM) of painted area. Paint colors, dimensions and locations will be specified on the task order.	1,700	LM	
A743	**Paint Reflective Solid Pavement Lines**	The Contractor shall perform the painting of solid reflective pavement lines. The work includes surface preparation and painting of 10 cm (4 inch) wide solid pavement lines. Application of this ELIN will be used for pavement center and lateral lines only. All work shall be performed in accordance with Section 32 17 23.00 20 -"Pavement Markings". Unit of measurement shall be linear meters (LM) of painted area. Paint colors, dimensions and locations will be specified on the task order.	1,300	LM	

ELIN	SHORT DESCRIPTION	FULL DESCRIPTION	EST QTY	UNIT OF ISSUE	UNIT PRICE (USD)
A744	**Paint Center Pavement Lines**	The Contractor shall perform the painting of center pavement lines. The work includes surface preparation and painting of 10 cm wide center pavement lines. Application of this ELIN will be used for pavement lateral lines, parking stall and diagonal no-parking lines. All work shall be performed in accordance with Section 32 17 23.00 20 -"Pavement Markings". Unit of measurement shall be linear meters (LM) of painted area. Paint colors, dimensions and locations will be specified on the task order.	1,300	LM	
A745	**Paint Reflective Center Pavement Lines**	The Contractor shall perform the painting of center reflective pavement lines. The work includes surface preparation and painting of 10 cm (4 inch) wide reflective center pavement lines. Application of this ELIN will be used for pavement center and lateral lines only. All work shall be performed in accordance with Section 32 17 23.00 20 -"Pavement Markings". Unit of measurement shall be linear meters (LM) of painted area. Paint colors, dimensions and locations will be specified on the task order.	250	LM	
A746	**Paint Concrete Wheel Stops and Curbs**	The Contractor shall perform the painting of existing concrete wheel stops and pavement curbs. The work includes surface preparation and painting of all designated exposed surfaces. All work shall be performed in accordance with Section 32 17 23.00 20 -"Pavement Markings". Unit of measurement shall be square meters (SM) of painted area, as computed by multiplying actual dimensions of paint length, by width, (L x W). Paint colors, dimensions and locations will be specified on the task order.	250	SM	
A747	**Paint Pedestrian Crosswalk Markings**	The Contractor shall perform the painting of pedestrian crosswalk markings. The work includes surface preparation and painting. Typical details are shown on contract drawing PLATE # 14. All work shall be performed in accordance with Section 32 17 23.00 20 -"Pavement Markings". Unit of measurement shall be square meters (SM) of actual painted area, as computed by multiplying actual dimensions of paint length, by width, (L x W). Paint colors and locations will be specified on the task order.	200	SM	
A748	**Paint Reflective Pedestrian Crosswalk Markings**	The Contractor shall perform the painting of reflective pedestrian crosswalk markings. The work includes surface preparation and painting. Typical details are shown on contract drawing PLATE # 14. All work shall be performed in accordance with Section 32 17 23.00 20 -"Pavement Markings". Unit of measurement shall be square meters (SM) of actual painted area, as computed by multiplying actual dimensions of paint length, by width, (L x W). Paint colors and locations will be specified on the task order.	200	SM	
A749	**Paint Stop Markings**	The Contractor shall perform the painting of stop markings. The work includes surface preparation and painting. Typical details are shown on contract drawing PLATE # 14. All work shall be performed in accordance with Section 32 17 23.00 20 -"Pavement Markings". Unit of measurement shall be square meters (SM) of actual painted area, as computed by multiplying actual dimensions of paint length, by width, (L x W). Paint colors and locations will be specified on the task order.	40	SM	

ELIN	SHORT DESCRIPTION	FULL DESCRIPTION	EST QTY	UNIT OF ISSUE	UNIT PRICE (USD)
A750	**Paint Reflective Stop Markings**	The Contractor shall perform the painting of reflective stop markings. The work includes surface preparation and painting. Typical details are shown on contract drawing PLATE # 14. All work shall be performed in accordance with Section 32 17 23.00 20-"Pavement Markings". Unit of measurement shall be square meters (SM) of actual painted area, as computed by multiplying actual dimensions of paint length, by width, (L x W). Paint colors and locations will be specified on the task order.	40	SM	
A751	**Paint Yield Markings**	The Contractor shall perform the painting of yield markings. The work includes surface preparation and painting. Typical details are shown on contract drawing PLATE # 15. All work shall be performed in accordance with Section 32 17 23.00 20 -"Pavement Markings". Unit of measurement shall be Each (EA). Paint colors and locations will be specified on the task order.	13	EA	
A752	**Paint Reflective Yield Markings**	The Contractor shall perform the painting of yield markings. The work includes surface preparation and painting. Typical details are shown on contract drawing PLATE # 15. All work shall be performed in accordance with Section 32 17 23.00 20 -"Pavement Markings". Unit of measurement shall be Each (EA). Paint colors and locations will be specified on the task order.	13	EA	
A753	**Paint Direction Arrows Markings**	The Contractor shall perform the painting of directional arrow markings. The work includes surface preparation and painting. Typical details are shown on contract drawing PLATE # 15. All work shall be performed in accordance with Section 32 17 23.00 20 -"Pavement Markings". Unit of measurement shall be EA (EA). Paint colors and locations will be specified on the task order. Unit of measurement shall be Each (EA). Paint colors and locations will be specified on the task order.	25	EA	
A754	**Paint Reflective Direction Arrows Markings**	The Contractor shall perform the painting of reflective directional arrow markings. The work includes surface preparation and painting. Typical details are shown on contract drawing PLATE # 15. All work shall be performed in accordance with Section 32 17 23.00 20 -"Pavement Markings". Unit of measurement shall be Each (EA). Paint colors and locations will be specified on the task order.	13	EA	
A755	**Paint Special Markings**	The Contractor shall perform the painting of special pavement markings, such as but not limited to, handicap parking symbols and "NO PARKING" letters. The work includes surface preparation and painting. Typical details are shown on contract drawing PLATE # 14. All work shall be performed in accordance with Section 32 17 23.00 20 -"Pavement Markings". Unit of measurement shall be square meters (SM) of actual painted area, as computed by multiplying actual dimensions of paint area length, by width, (L x W). Paint colors and locations will be specified on the task order.	25	SM	
A756	**Pavement Traffic Road Reflectors**	The Contractor shall perform the installation of pavement traffic reflectors. The work includes supply, delivery, surface preparation and installation. All work shall be performed in accordance with Section 32 17 23.00 20 - "Pavement Markings". Unit of measurement shall be Each (EA). Reflector colors and locations will be specified on the task order.	25	EA	

ELIN	SHORT DESCRIPTION	FULL DESCRIPTION	EST QTY	UNIT OF ISSUE	UNIT PRICE (USD)
A757	**Pavement Striping**	The Contractor shall perform the re-striping of existing striped roads and to stripe newly paved or otherwise un-striped roads, in accordance with the Spanish law and PG-3. The work shall include all types of solid and reflective striping and pavement marking of all types, including but not limited to: obliteration of existing road markings, solid and broken striping center and lateral striping, pavement traffic reflectors, all pavement edge markings, turning radius markings, pedestrian crosswalk markings, directional arrows, stop or yield pavement markings, and any special markings required. Typical details are shown on contract drawing PLATE #'S 14, & 15. All work shall be performed in accordance with Section 32 17 23.00 20 -"Pavement Markings". Unit of measurement shall be kilometer (KM) of painted area. Paint colors, dimensions and locations will be specified on the task order.	35	KM	
A758	**Parking Lot Striping**	The Contractor shall perform the re-striping of existing striped parking lots same as existing and to stripe newly paved or otherwise un-striped parking areas. The work shall include all types of solid and reflective striping and pavement marking of all types, including but not limited to: obliteration of existing markings, solid and broken striping, pavement traffic reflectors, all pavement edge makings, turning radius markings, pedestrian crosswalk markings, directional arrows, stop or yield pavement markings, any special markings required, and concrete wheel stops and curbs. Typical details are shown on contract drawing PLATE #'S 14, & 15. All work shall be performed in accordance with Section 32 17 23.00 20-"Pavement Markings". Unit of measurement shall be square meter (SM) of painted area. Paint colors, dimensions and locations will be specified on the task order.	37,500	SM	
A759	**Reinforced Sidewalks Construction**	The Contractor shall perform the construction of 10 cm thick reinforced concrete sidewalks. The work includes site preparation, construction and installation of forms, placement of WWF steel, concrete placement, installation of vapor barrier, installation of expansion joints and control joints, and finish. Typical details are shown on contract drawing PLATE #18. All work shall be performed in accordance with Section 03 33 00-"Cast-In-Place Architectural Concrete". Unit of measurement shall be square meter (SM), as computed by multiplying, in meters, area length, by width, (L x W). Dimensions will be specified on the task order. Work ordered under this ELIN may be in conjunction with work ordered under ELINS # A712 and #A734.	1,500	SM	
A760	**Concrete Wheel Stops**	The Contractor shall provide and install concrete wheel stops. The work includes fabrication and installation of concrete wheel stops. Typical wheel stop construction detail is shown on contract drawing PLATE # 16. All work shall be performed in accordance with Section 03 33 00 -"Cast-In-Place Architectural Concrete". Unit of measurement shall be each (EA). Units and locations will be specified on the task order.	50	EA	
A761	**Clean Culverts**	The Contractor shall clean culverts. The work includes removing dirt, debris and foreign matter that obstructs the interior of the culvert pipe. All work shall be performed in accordance with section 01 57 19.00 20 - "Temporary Environmental Controls". Unit of measurement shall be linear meters (LM). Units and locations will be specified on the task order.	100	LM	

ELIN	SHORT DESCRIPTION	FULL DESCRIPTION	EST QTY	UNIT OF ISSUE	UNIT PRICE (USD)
A762	**Clean Storm Drainage Channels**	The Contractor shall clean storm drainage channels. The work includes removing dirt, debris and foreign matter that obstructs the drainage channel. All work shall be performed in accordance with section 01 57 19.00 20 -"Temporary Environmental Controls". Unit of measurement shall be linear meters (LM). Units and locations will be specified on the task order.	2,500	LM	
A763	**Install Pre-Cast Concrete Curbs**	The Contractor shall provide and install pre-cast concrete curbs. The work includes excavation, lean concrete and placement of pre-cast concrete curbs. Typical detail of pre-cast concrete curb installation is shown on contract drawing PLATE # 17. All work shall be performed in accordance with Section 03 33 00-"Cast-in-Place Architectural Concrete". Unit of measurement shall be linear meters (LM). Units and locations will be specified on the task order.	100	LM	
A764	**Replace Frame and Cover on Existing Utilities**	The Contractor shall replace frame and cover on existing utilities. The work includes removal and disposal of old frame and cover, and providing and installation of new frame and cover to new grade. All work shall be performed in accordance with Section 05 50 00 -"Metal Miscellaneous and Fabrications". Unit of measurement shall be each (EA).	10	EA	
A765	**Install Guard Posts**	The Contractor shall install guard posts. The work includes site preparation, providing steel pipe, internal armoring and anchorage of post with concrete solidly and paint stripes. Typical guard post installation detail is shown on contract drawing PLATE # 16. All work shall be performed in accordance with Sections 05 50 00 -"Metal Miscellaneous and Fabrications" and 03 33 00 -"Cast-in-Place Architectural Concrete". Unit of measurement shall be each (EA).	25	EA	
A766	**Topographical Surveying**	The Contractor shall perform topographical surveying at the job site in the area indicated. The work includes establishing benchmark of elevations and stake out the new grade spots elevation. The survey shall be made with elevations data, mean sea level at Alicante for maintenance and repair works. Should the works are for new construction, the survey shall be made with elevations data, mean sea level at Alicante and U.T.M coordinates which will be provided by the Government. All survey data shall be produced and submitted on AUTOCAD software, latest version. The Contractor shall submit all survey data to the Contracting Officer for approval. Submit all CAD files for the final drawings on CD ROM disks. Scan all files submitted for viruses using the latest version of a commercial scanning program. Unit of measurement shall be square meters (SM), as computed by multiplying, in meters, area length, by width, (L x W).	25,300	SM	

ELIN	SHORT DESCRIPTION	FULL DESCRIPTION	EST QTY	UNIT OF ISSUE	UNIT PRICE (USD)
A767	**Site Plan Layout**	The Contractor shall perform and provide detailed drawings for exact sizes, exact numbers and detailed positioning of items and final as-built drawings that shall clearly depict the technical design of the facility. Drawings shall be in sufficient detail to show compliance with the contract requirements. All work shall be performed in accordance with Computer Aided Design and Drafting Policy. Drawings shall meet the applicable drawing standards specified in the Guide for Architect Engineer Firms available on the website for Atlantic Division, Naval Facilities Engineering Command. All drawings submitted for review shall be in D size, 24 inch x 36 inch, approximately 61 cm x 91 cm. Other drawing size may be used, if approved by the Contracting Officer. Use Naval Station Rota, Public Works Department Title Block. Unit of measurement shall be each (EA).	10	EA	
A768	**Emergency Repairs Asphalt Pot Holes**	The Contractor shall perform emergency repairs to asphalt potholes within the limits threshold of 1sm per hole. Emergency repairs shall be responded within 4 hours of the Government notification during Government regular working hours. If the emergency repair exceed the threshold the Contractor shall provide a Cost Proposal. The work includes removal of all loose debris, broken pieces of pavement and dust. Fill pothole with ready-to-use bituminous polymer modified cold asphalt and spread with rake or shovel and compact cold asphalt with manual roller or tamper to just over the level of the existing pavement. Thickness and application in layers of the bituminous cold asphalt shall be done as recommended by the manufacturer. Cold asphalt patching material shall comply with "Cold Asphalt Specifications"	10	EA	
A800	**Removal of Corrugated and Pre-Formed Metal Sheet Roofing.**	The Contractor shall perform the removal of existing corrugated and pre-formed metal sheet roofing. All rubbish, debris and loose material resulting from removal of corrugated and pre-formed metal sheet roofing shall be removed from the limits of the Naval Station daily. All work shall be performed in accordance with Sections 01 57 19.00 20 & 02 41 00 Unit of measurement shall be square meters (SM), as computed by multiplying, in meters, area length by width (L x W) , including all overlaps, overhangs, around roofing equipment/vents. Vertical walls and general obstructions 30.48 cm. (one foot) and under and all vertical walls over 30.48 cm (one foot) should be added to the square meter total. Dimensions and locations will be specified on the task order.	400	SM	
A801	**Removal of Corrugated and Pre-Formed Metal Roofing Ridge.**	The Contractor shall perform the removal of existing corrugated and pre-formed metal roofing ridge. All rubbish, debris and loose material resulting from removal of corrugated and pre-formed metal roofing ridge shall be removed from limits of the Naval Station daily. All work shall be performed in accordance with Sections 01 57 19.00 20 & 02 41 00 Unit of measurement shall be linear meters (LM) of removed roof ridge. Dimensions and locations will be specified on the task order.	60	LM	

ELIN	SHORT DESCRIPTION	FULL DESCRIPTION	EST QTY	UNIT OF ISSUE	UNIT PRICE (USD)
A802	**Removal of Corrugated Cement-Asbestos Sheet Roofing.**	The Contractor shall perform the removal of existing cement-asbestos sheet roofing. All rubbish, debris and loose material resulting from removal of cement-asbestos sheet roofing shall be removed from limits of the Naval Station daily. All work shall be performed in accordance with Sections 01 57 19.00 20, 02 41 00 & 02 82 14.00 10 Unit of measurement shall be square meters (SM), as computed by multiplying, in meters, area length by width (L x W) , including all overlaps, overhangs, around roofing equipment/vents. Vertical walls and general obstructions 30.48 cm. (one foot) and under and all vertical walls over 30.48 cm (one foot) should be added to the square meter total. Dimensions and locations will be specified on the task order.	1,000	SM	
A803	**Removal of Corrugated Plastic Sheet Roofing.**	The Contractor shall perform the removal of existing corrugated plastic sheet roofing. All rubbish, debris and loose material resulting from removal of corrugated plastic sheet roofing shall be removed from limits of the Naval Station daily. All work shall be performed in accordance with Sections 01 57 19.00 20 & 02 41 00 Unit of measurement shall be square meters (SM), as computed by multiplying, in meters, area length by width (L x W) , including all overlaps, overhangs, around roofing equipment/vents. Vertical walls and general obstructions 30.48 cm. (one foot) and under and all vertical walls over 30.48 cm (one foot) should be added to the square meter total. Dimensions and locations will be specified on the task order.	100	SM	
A804	**Removal of Gravel Surfaced Bituminous Built-Up Roofing.**	The Contractor shall perform the removal of existing gravel surfaced bituminous built-up roofing. Work includes removal of existing loose gravel. All debris and loose material resulting from removal of gravel surfaced bituminous built-up roofing shall be removed from limits of the Naval Station daily. All work shall be performed in accordance with Sections 01 57 19.00 20 & 02 41 00 Unit of measurement shall be square meters (SM), as computed by multiplying, in meters, area length by width (L x W) , including all overlaps, overhangs, around roofing equipment/vents. Vertical walls and general obstructions 30.48 cm. (one foot) and under and all vertical walls over 30.48 cm (one foot) should be added to the square meter total. Dimensions and locations will be specified on the task order.	250	SM	
A805	**Removal of Polymeric Asphalt Sheet Roofing.**	The Contractor shall perform the removal of existing polymeric asphalt sheet roofing. All debris and loose material resulting from removal of polymeric asphalt sheet roofing shall be removed from limits of the Naval Station daily. All work shall be performed in accordance with Sections 01 57 19.00 20 & 02 41 00 Unit of measurement shall be square meters (SM), as computed by multiplying, in meters, area length by width (L x W) , including all overlaps, overhangs, around roofing equipment/vents. Vertical walls and general obstructions 30.48 cm. (one foot) and under and all vertical walls over 30.48 cm (one foot) should be added to the square meter total. Dimensions and locations will be specified on the task order.	2,000	SM	

ELIN	SHORT DESCRIPTION	FULL DESCRIPTION	EST QTY	UNIT OF ISSUE	UNIT PRICE (USD)
A806	**Removal of Inverted Insulated Roofing.**	The Contractor shall perform the removal of existing inverted insulated roofing. Includes removal of existing loose gravel ballast, insulation and all polymeric asphalt sheet roofing membranes, where applicable. All debris and loose material resulting from removal of inverted insulated roofing shall be removed from limits of the Naval Station daily. All work shall be performed in accordance with Sections 01 57 19.00 20 & 02 41 00 Unit of measurement shall be square meters (SM), as computed by multiplying, in meters, area length by width (L x W) , including all overlaps, overhangs, around roofing equipment/vents. Vertical walls and general obstructions 30.48 cm. (one foot) and under and all vertical walls over 30.48 cm (one foot) should be added to the square meter total. Dimensions and locations will be specified on the task order.	600	SM	
A807	**Removal of Loose Gravel Ballast.**	The Contractor shall perform the removal of existing loose gravel ballast from gravel surfaced bituminous built-up and inverted insulated roofing. All debris and loose material resulting from removal of loose gravel ballast shall be removed from limits of the Naval Station daily. All work shall be performed in accordance with Sections 01 57 19.00 20 & 02 41 00 Unit of measurement shall be square meters (SM), as computed by multiplying, in meters, area length by width (L x W) , including all overlaps, overhangs, around roofing equipment/vents. Vertical walls and general obstructions 30.48 cm. (one foot) and under and all vertical walls over 30.48 cm (one foot) should be added to the square meter total. Dimensions and locations will be specified on the task order.	200	SM	
A808	**Removal of Curved Arabic Tile Roofing.**	The Contractor shall perform the removal of existing curved Arabic tile roofing. All debris and loose material resulting from the removal of the curved Arabic tile roofing shall be removed from limits of the Naval Station daily. All work shall be performed in accordance with Sections 01 57 19.00 20 & 02 41 00 Unit of measurement shall be square meters (SM), as computed by multiplying, in meters, area length by width (L x W) , including all overlaps, overhangs, around roofing equipment/vents. Vertical walls and general obstructions 30.48 cm. (one foot) and under and all vertical walls over 30.48 cm (one foot) should be added to the square meter total. Dimensions and locations will be specified on the task order.	200	SM	
A809	**Removal of Rain Gutters and Down Spouts.**	The Contractor shall perform the removal of existing roof gutters and down spouts. Work includes removal of all gutter and/or down spout hangers and fasteners. All debris and loose material resulting from removal of gutters and down spouts shall be removed from limits of the Naval Station daily. All work shall be performed in accordance with Sections 01 57 19.00 20 & 02 41 00 Unit of measurement shall be linear meters (LM) of removed roof gutters and/or down spouts. Dimensions and locations will be specified on the task order.	400	LM	

ELIN	SHORT DESCRIPTION	FULL DESCRIPTION	EST QTY	UNIT OF ISSUE	UNIT PRICE (USD)
A810	**Removal of Polyurethane Foam Roof.**	The Contractor shall perform the removal of existing polyurethane foam roof. All debris and loose material resulting from the removal of existing polyurethane foam roof shall be removed from limits of the Naval Station daily. All work shall be performed in accordance with Sections 01 57 19.00 20 & 02 41 00 Unit of measurement shall be square meters (SM), as computed by multiplying, in meters, area length by width (L x W) , including all overlaps, overhangs, around roofing equipment/vents. Vertical walls and general obstructions 30.48 cm. (one foot) and under and all vertical walls over 30.48 cm (one foot) should be added to the square meter total. Dimensions and locations will be specified on the task order.	1,000	SM	
A811	**Installation of Corrugated Metal Sheet Roofing.**	The Contractor shall perform the installation of corrugated metal sheet roofing. The work includes surface preparation, supply, delivery and installation of corrugated metal sheet roof, all as necessary so as to provide for a complete and functional roofing system. Where applicable, installed corrugated metal sheet roofing shall match existing and adjacent roofing in shape, size and profile. Typical details are shown on contract drawing PLATES #'s 1, 3 & 11. All work shall be performed in accordance with Section 07 41 13 . Unit of measurement shall be square meters (SM), as computed by multiplying, in meters, area length by width (L x W) , including all overlaps, overhangs, around roofing equipment/vents. Vertical walls and general obstructions 30.48 cm. (one foot) and under and all vertical walls over 30.48 cm (one foot) should be added to the square meter total. Dimensions and locations will be specified on the task order.	1,000	SM	
A812	**Installation of Corrugated Sandwich Metal Sheet Roofing.**	The Contractor shall perform the installation of corrugated sandwich metal sheet roofing. The work includes surface preparation, supply, delivery and installation of corrugated sandwich metal sheet roof, all as necessary so as to provide for a complete and functional roofing system. Where applicable, installed corrugated sandwich metal sheet roofing shall match existing and adjacent roofing in shape, size and profile. All work shall be performed in accordance with Section 07 41 13. Unit of measurement shall be square meters (SM), as computed by multiplying, in meters, area length by width (L x W) , including all overlaps, overhangs, around roofing equipment/vents. Vertical walls and general obstructions 30.48 cm. (one foot) and under and all vertical walls over 30.48 cm (one foot) should be added to the square meter total. Dimensions and locations will be specified on the task order.	1,000	SM	
A813	**Installation of Corrugated Metal Sheet Roofing Ridge.**	The Contractor shall perform the installation of corrugated metal sheet roofing ridge. The work includes surface preparation, supply, task and installation of corrugated metal sheet roof ridge, all as necessary so as to provide for a complete and functional roofing system. Where applicable, installed corrugated metal sheet roofing ridge shall match existing and adjacent roofing ridge in shape, size and profile. Typical details are shown on contract drawing PLATES #'s 1, 3 & 11. All work shall be performed in accordance with Section 07 41 13. Unit of measurement shall be linear meters (LM) of installed corrugated metal sheet roofing ridge. Dimensions and locations will be specified on the task order.	30	LM	

ELIN	SHORT DESCRIPTION	FULL DESCRIPTION	EST QTY	UNIT OF ISSUE	UNIT PRICE (USD)
A814	**Installation of Pre-Formed Metal Sheet Roofing.**	The Contractor shall perform the installation of pre-formed metal sheet roofing. The work includes surface preparation, supply, delivery and installation of pre-formed metal sheet roof, all as necessary so as to provide for a complete and functional roofing system. Where applicable, installed pre-formed metal sheet roofing shall match existing and adjacent roofing in shape, size and profile. Typical details are shown on contract drawing PLATES #'s 1, 3 & 11. All work shall be performed in accordance with Section 07 41 13. Unit of measurement shall be square meters (SM), as computed by multiplying, in meters, area length by width (L x W) , including all overlaps, overhangs, around roofing equipment/vents. Vertical walls and general obstructions 30.48 cm. (one foot) and under and all vertical walls over 30.48 cm (one foot) should be added to the square meter total. Dimensions and locations will be specified on the task order.	200	SM	
A815	**Installation of Pre-Formed Metal Sheet Roofing Ridge.**	The Contractor shall perform the installation of pre-formed metal sheet roofing ridge. The work includes surface preparation, supply, task and installation of pre-formed metal sheet roof ridge, all as necessary so as to provide for a complete and functional roofing system. Where applicable, installed pre-formed metal sheet roofing ridge shall match existing and adjacent roofing ridge in shape, size and profile. Typical details are shown on contract drawing PLATES #'s 1, 3 & 11. All work shall be performed in accordance with Section 07 41 13. Unit of measurement shall be linear meters (LM) of installed pre-formed metal sheet roofing ridge. Dimensions and locations will be specified on the task order.	30	LM	
A816	**Installation of Pre-Formed Sandwich Metal Sheet Roofing.**	The Contractor shall perform the installation of pre-formed sandwich metal sheet roofing. The work includes surface preparation, supply, delivery and installation of pre-formed sandwich metal sheet roof, all as necessary so as to provide for a complete and functional roofing system. Where applicable, installed pre-formed sandwich metal sheet roofing shall match existing and adjacent roofing in shape, size and profile. All work shall be performed in accordance with Section 07 41 13. Unit of measurement shall be square meters (SM), as computed by multiplying, in meters, area length by width (L x W) , including all overlaps, overhangs, around roofing equipment/vents. Vertical walls and general obstructions 30.48 cm. (one foot) and under and all vertical walls over 30.48 cm (one foot) should be added to the square meter total. Dimensions and locations will be specified on the task order.	200	SM	
A817	**Re-Sealing of Pre-Formed and Corrugated Metal Sheet Roofing Joints and Overlaps.**	The Contractor shall perform the re-sealing of pre-formed and corrugated metal sheet roofing joints and overlaps with a silicone-rubber base mastic caulking. Existing joint and/or overlap caulking shall be completely removed and the surface area to receive new caulking shall be thoroughly cleaned and prepared. Typical details are shown on contract drawing PLATES #'s 1, 3 & 11. All work shall be performed in accordance with Sections 07 41 13 & 07 92 00. Unit of measurement shall be linear meters (LM) of re-sealed pre-formed and/or corrugated metal sheet roofing joints and/or overlaps. Dimensions and locations will be specified on the task order.	200	LM	

ELIN	SHORT DESCRIPTION	FULL DESCRIPTION	EST QTY	UNIT OF ISSUE	UNIT PRICE (USD)
A818	**Re-Sealing of Pre-Formed and Corrugated Metal Sheet Roofing Fasteners.**	The Contractor shall perform the re-sealing of pre-formed and corrugated metal sheet roofing fasteners with a silicone-rubber base mastic caulking. Existing fasteners caulking shall be completely removed and the surface area to receive new caulking shall be thoroughly cleaned and prepared. Typical details are shown on contract drawing PLATES #'s 1, 3 & 11. All work shall be performed in accordance with Sections 07 41 13 & 07 92 00. Unit of measurement shall be each (EA) re-sealed pre-formed and/or corrugated metal sheet roofing fastener. Quantities and locations will be specified on the task order.	200	EA	
A819	**Waterproofing of union between Pre-Formed and Corrugated Metal Sheet Roofing and Vertical walls.**	The Contractor shall perform the waterproofing of the union between pre-formed and corrugated metal sheet roofing with vertical surfaces by means of Styrene Butadiene Styrene (SBS) modified membrane. Where applicable, existing aluminum finished polymeric asphalt sheets or Styrene Butadiene Styrene (SBS) modified membrane shall be removed and the surface area to receive new Butadiene Styrene (SBS) modified membrane shall be thoroughly cleaned and prepared. Typical details are shown on contract drawing PLATES #'s 1, 3 & 11. All work shall be performed in accordance with Section 07 52 00 and 07 41 13. Unit of measurement shall be linear meters (LM) of installed polymeric asphalt sheet roofing at vertical junctions. Dimensions and locations will be specified on the task order.	50	LM	
A820	**Installation of Corrugated Plastic Sheet Roofing.**	The Contractor shall perform the installation of corrugated plastic sheet roofing. The work , including surface preparation, supply, delivery and installation of corrugated plastic sheet roof, all as necessary so as to provide for a complete and functional roofing system. Where applicable, installed corrugated plastic sheet roofing shall match existing and adjacent roofing in shape, size, color and profile. Typical details are shown on contract drawing PLATE # 1, 3 & 11. All work shall be performed in accordance with Section 07 54 19. Unit of measurement shall be square meters (SM), as computed by multiplying, in meters, area length by width (L x W) , including all overlaps, overhangs, around roofing equipment/vents. Vertical walls and general obstructions 30.48 cm. (one foot) and under and all vertical walls over 30.48 cm (one foot) should be added to the square meter total. Dimensions and locations will be specified on the task order.	100	SM	
A821	**Installation of Corrugated Plastic Sheet Roofing Ridges.**	The Contractor shall perform the installation of corrugated plastic sheet roofing ridges. The work includes surface preparation, supply and installation of corrugated plastic sheet roofing ridges, all as necessary so as to provide for a complete and functional roofing system. Where applicable, installed corrugated plastic sheet roofing ridges shall match existing and adjacent roofing ridges in shape, size, color and profile. Typical details are shown on contract drawing PLATES #'s 1, 3 & 11. All work shall be performed in accordance with Section 07 54 19. Unit of measurement shall be linear meters (LM) installed corrugated plastic sheet roofing ridges. Dimensions and locations will be specified on the task order.	100	LM	

ELIN	SHORT DESCRIPTION	FULL DESCRIPTION	EST QTY	UNIT OF ISSUE	UNIT PRICE (USD)
A822	**Re-Sealing of Corrugated Plastic Sheet Roofing Joints and Overlaps.**	The Contractor shall perform the re-sealing of corrugated plastic sheet roofing joints and overlaps with a silicone-rubber base mastic caulking. Existing joint and/or overlap caulking shall be completely removed and the surface area to receive new caulking shall be thoroughly cleaned and prepared. Typical details are shown on contract drawing PLATES #'s 1, 3 & 11. All work shall be performed in accordance with Sections 07 54 19 & 07 92 00. Unit of measurement shall be linear meters (LM) of re-sealed corrugated plastic sheet roofing joints and/or overlaps. Dimensions and locations will be specified on the task order.	200	LM	
A823	**Re-Sealing of Corrugated Plastic Sheet Roofing Fasteners.**	The Contractor shall perform the re-sealing of corrugated plastic sheet roofing fasteners with a silicone-rubber base mastic caulking. Existing fasteners caulking shall be completely removed and the surface area to receive new caulking shall be thoroughly cleaned and prepared. Typical details are shown on contract drawing PLATES #'s 1, 3 & 11. All work shall be performed in accordance with Sections 07 54 19 & 07 92 00. Unit of measurement shall be each (EA) re-sealed corrugated plastic sheet roofing fastener. Quantities and locations will be specified on the task order.	200	EA	
A824	**Waterproofing of union between Corrugated plastic Sheet Roofing and Vertical walls.**	The Contractor shall perform the waterproofing of the union between corrugated plastic sheet roofing with vertical surfaces by means of Styrene Butadiene Styrene (SBS) modified membrane. Where applicable, existing aluminum finished polymeric asphalt sheets or Styrene Butadiene Styrene (SBS) modified membrane shall be removed and the surface area to receive new Butadiene Styrene (SBS) modified membrane shall be thoroughly cleaned and prepared. Typical details are shown on contract drawing PLATES #'s 1, 3 & 11. All work shall be performed in accordance with Sections 07 52 00 and 07 54 19. Unit of measurement shall be linear meters (LM) of installed polymeric asphalt sheet roofing at vertical junctions. Dimensions and locations will be specified on the task order.	100	LM	
A825	**Installation of Styrene Butadiene Styrene (SBS) Modified Bituminous membrane roofing on Existing "Sevillana" Tile Roofs.**	The Contractor shall perform the installation of Styrene Butadiene Styrene (SBS) Modified Bituminous membrane roofing on existing "Sevillana" roofing. The work includes surface preparation, supply, delivery and installation of Styrene Butadiene Styrene (SBS) Modified Bituminous membrane roofing on existing "Sevillana" tile roofing, all as necessary so as to provide for a complete and functional roofing system. Installation of crickets at junction of deck and vertical surfaces shall be ordered separately under ELIN A807. Typical details are shown on contract drawing PLATES #'s 4, 8, 9, 12, 14, 15 & 16. All work shall be performed in accordance with Section 07 52 00. Unit of measurement shall be square meters (SM), as computed by multiplying, in meters, area length by width (L x W) , including all overlaps, overhangs, around roofing equipment/vents. Dimensions and locations will be specified on the task order.	200	SM	

ELIN	SHORT DESCRIPTION	FULL DESCRIPTION	EST QTY	UNIT OF ISSUE	UNIT PRICE (USD)
A826	**Installation of Styrene Butadiene Styrene (SBS) Modified Bituminous membrane Roofing on Concrete Roof Decks.**	The Contractor shall perform the installation of styrene butadiene styrene (SBS) modified bituminous membrane roofing on concrete roof decks. The work includes surface preparation, supply, delivery and installation of Styrene Butadiene Sstyrene (SBS) modified bituminous membrane roofing on concrete roof decks, all as necessary so as to provide for a complete and functional roofing system. Installation of crickets at junction of deck and vertical surfaces shall be ordered separately under ELIN A807. Typical details are shown on contract drawing PLATES #'s 4, 8, 9, 12, 14, 15 & 16. All work shall be performed in accordance with Section 07 52 00. Unit of measurement shall be square meters (SM), as computed by multiplying, in meters, area length by width (L x W) , including all overlaps, overhangs, around roofing equipment/vents. Dimensions and locations will be specified on the task order.	10,000	SM	
A827	**Installation of Insulated Concrete Roofing Systems.**	The Contractor shall perform the installation of insulated concrete roofing systems. Work includes installation of insulation, sloped cellular concrete and Styrene Butadiene Styrene (SBS) modified bituminous membrane plies, all as necessary so as to provide for a complete and functional roofing system. Averaged thickness of cellular concrete shall not exceed 10 cm. Typical details are shown on contract drawing PLATES #'s 4, 8, 9, 12, 13, 14, 15 & 16. All work shall be performed in accordance with Sections 03 52 00 and 07 52 00. Unit of measurement shall be square meters (SM), as computed by multiplying, in meters, area length by width (L x W) , including all overlaps, overhangs, around roofing equipment/vents. Vertical walls and general obstructions 30.48 cm. (one foot) and under and all vertical walls over 30.48 cm (one foot) should be added to the square meter total. Dimensions and locations will be specified on the task order.	500	SM	
A828	**Installation of Curved Arabic Tile Roofing.**	The Contractor shall perform the installation of curved Arabic tile roofing. The work includes surface preparation, supply, delivery and installation of curved Arabic tile roofing, all as necessary so as to provide for a complete and functional roofing system. Where applicable, installed curved Arabic tile roofing shall match existing and adjacent roofing in shape, size, color and profile. Typical details are shown on contract drawing PLATES #'s 5, 6 & 7. All work shall be performed in accordance with Section 07 32 13. Unit of measurement shall be square meters (SM), as computed by multiplying, in meters, area length by width (L x W) , including all overlaps, overhangs, around roofing equipment/vents. Vertical walls and general obstructions 30.48 cm. (one foot) and under and all vertical walls over 30.48 cm (one foot) should be added to the square meter total. Dimensions and locations will be specified on the task order.	200	SM	

ELIN	SHORT DESCRIPTION	FULL DESCRIPTION	EST QTY	UNIT OF ISSUE	UNIT PRICE (USD)
A829	**Installation of Curved Arabic Tile Roofing Ridges**	The Contractor shall perform the installation of curved Arabic tile roofing ridges. The work includes surface preparation, supply, task and installation of curved Arabic tile roofing ridges, all as necessary so as to provide for a complete and functional roofing system. Where applicable, installed curved Arabic tile roofing ridges shall match existing and adjacent roofing ridge in shape, size, color and profile. Typical details are shown on contract drawing PLATES #'s 5, 6 & 7. All work shall be performed in accordance with Section 07 32 13. Unit of measurement shall be linear meters (LM) installed curved Arabic tile roofing ridges. Dimensions and locations will be specified on the task order.	50	LM	
A830	**Rubber Paint over exiting Curved Arabic Tile Roofing.**	The Contractor shall perform the painting over the existing curved Arabic tile roofing. The work includes surface preparation, supply, delivery and clear rubber painting of curved Arabic tile roofing, all as necessary so as to provide for a complete and functional roofing system. All work shall be performed in accordance with Section 09 90 00. Unit of measurement shall be square meters (SM), as computed by multiplying, in meters, area length by width (L x W) , including all overlaps, overhangs, around roofing equipment/vents. Vertical walls and general obstructions 30.48 cm. (one foot) and under and all vertical walls over 30.48 cm (one foot) should be added to the square meter total. Dimensions and locations will be specified on the task order.	7,500	SM	
A831	**Installation of Sheet Metal Flashing on Aluminum Finished Polymeric (or SBS) Asphalt Sheet Roofing.**	The Contractor shall perform the installation of sheet metal flashing on aluminum finished polymeric (or SBS) asphalt sheet roofing. Typical details are shown on contract drawing PLATE # 4. All work shall be performed in accordance with Section 07 60 00. Unit of measurement shall be square meters (SM), as computed by multiplying, in meters, area length by width (L x W) , including all overlaps, overhangs, around roofing equipment/vents. Vertical walls and general obstructions 30.48 cm. (one foot) and under and all vertical walls over 30.48 cm (one foot) should be added to the square meter total. Dimensions and locations will be specified on the task order.	50	SM	
A832	**Installation of Sheet Metal Flashing on Parapet Copings.**	The Contractor shall perform the installation of sheet metal flashing on parapet copings. Typical details are shown on contract drawing PLATE # 8. All work shall be performed in accordance with Section 07 60 00. Unit of measurement shall be square meters (SM), as computed by multiplying, in meters, area length by width (L x W) , including all overlaps, overhangs, around roofing equipment/vents. Vertical walls and general obstructions 30.48 cm. (one foot) and under and all vertical walls over 30.48 cm (one foot) should be added to the square meter total. Dimensions and locations will be specified on the task order.	100	SM	
A833	**Installation of Sheet Metal Expansion Joint Flashings.**	The Contractor shall perform the installation of sheet metal expansion joint Flashings. Typical details are shown on contract drawing PLATE # 9. All work shall be performed in accordance with Section 07 60 00. Unit of measurement shall be linear meters (LM) of installed sheet metal expansion joint Flashings. Dimensions and locations will be specified on the task order.	100	LM	

ELIN	SHORT DESCRIPTION	FULL DESCRIPTION	EST QTY	UNIT OF ISSUE	UNIT PRICE (USD)
A834	**Installation of Rain Gutters.**	The Contractor shall perform the installation of rain gutters. Work shall include all hangers and fasteners necessary for a complete and functional installation. Typical details are shown on contract drawing PLATE # 11. All work shall be performed in accordance with Section 07 60 00. Unit of measurement shall be linear meters (LM) of installed rain gutters. Dimensions and locations will be specified on the delivery order.	500	LM	
A835	**Installation of Rain Gutters and/or Scupper Down Spouts.**	The Contractor shall perform the installation of rain gutters and/or scupper down spouts. Work shall include all hangers and fasteners necessary for a complete and functional installation. Typical details are shown on contract drawing PLATE # 10. All work shall be performed in accordance with Section 07 60 00. Unit of measurement shall be linear meters (LM) of installed rain gutters and/or scupper down spouts. Dimensions and locations will be specified on the task order.	100	LM	
A836	**Installation of Down Spout Conductor Heads.**	The Contractor shall perform the installation of down spout conductor heads. Typical details are shown on contract drawing PLATE # 10. All work shall be performed in accordance with Section 07 60 00. Unit of measurement shall be each (EA) installed down spout heads. Quantities and locations will be specified on the task order.	25	EA	
A837	**Application of Sprayed Polyurethane Foam (PUF) Roof Coating.**	The Contractor shall perform the application of sprayed polyurethane (PUF) roof coating on existing pre-formed and/or corrugated metal sheet, asbestos-cement, and curved Arabic red tile roofs. Work includes application of sprayed polyurethane and application of elastomeric roof coating. Typical details are shown on contract drawing PLATE # 2. All work shall be performed in accordance with Section 07 57 13. Unit of measurement shall be square meters (SM), as computed by multiplying, in meters, area length by width (L x W) , including all overlaps, overhangs, around roofing equipment/vents. Vertical walls and general obstructions 30.48 cms. (one foot) and under and all vertical walls over 30.48 cms. (one foot) should be added to the square meter total. Dimensions and locations will be specified on the task order.	1,200	SM	
A838	**Re-application of Elastomeric Roof Coating Over Polyurethane Foam (PUF).**	The Contractor shall perform the re-application of elastomeric roof coating over existing polyurethane foam (PUF) roof coating. Work includes removal of insulation which become damaged, overexposed to weather, or contaminated such that they cannot be cleaned and repaired to the satisfaction of the coating applicator, and provide new insulation and re-application of elastomeric roof coating. Typical details are shown on contract drawing PLATE # 2. All work shall be performed in accordance with Section 07 57 13. Unit of measurement shall be square meters (SM), as computed by multiplying, in meters, area length by width (L x W) , including all overlaps, overhangs, around roofing equipment/vents. Vertical walls and general obstructions 30.48 cms. (one foot) and under and all vertical walls over 30.48 cms. (one foot) should be added to the square meter total. Dimensions and locations will be specified on the task order.	8,000	SM	

ELIN	SHORT DESCRIPTION	FULL DESCRIPTION	EST QTY	UNIT OF ISSUE	UNIT PRICE (USD)
A839	**Re-paint Existing Polyurethane Foam.**	The Contractor shall perform the re-application of elastomeric roof coating over existing polyurethane foam coating. Work includes application of elastomeric roof coating over polyurethane foam. Typical details are shown on contract drawing PLATE # 2. All work shall be performed in accordance with Section 07 57 13. Unit of measurement shall be square meters (SM), as computed by multiplying, in meters, area length by width (L x W) , including all overlaps, overhangs, around roofing equipment/vents. Vertical walls and general obstructions 30.48 cm. (one foot) and under and all vertical walls over 30.48 cm (one foot) should be added to the square meter total. Dimensions and locations will be specified on the task order.	8,000	SM	
A840	**Installation of Inverted Insulated Roofing Systems.**	The Contractor shall perform the installation of inverted insulated roofing systems. Work includes installation of polymeric asphalt sheet roofing plies, polystyrene insulation and loose aggregate ballast, all as necessary so as to provide for a complete and functional roofing system. Typical details are shown on contract drawing PLATE # 13. All work shall be performed in accordance with Section 07 55 00. Unit of measurement shall be square meters (SM), as computed by multiplying, in meters, area length by width (L x W) , including all overlaps, overhangs, around roofing equipment/vents. Vertical walls and general obstructions 30.48 cm. (one foot) and under and all vertical walls over 30.48 cm (one foot) should be added to the square meter total. Dimensions and locations will be specified on the task order.	600	SM	
A841	**Installation of Crickets.**	The Contractor shall perform the installation of crickets at junctions of roof deck and vertical surfaces. All work shall be performed in accordance with Sections 03 52 00, 07 55 00 & 07 52 00, as applicable. Unit of measurement shall be linear meters (LM) of installed cricket. Dimensions and locations will be specified on the task order.	100	LM	
A842	**Installation of Expansion Joints.**	The Contractor shall perform the installation of neoprene expansion joints at junctions of roof decks and vertical surfaces. Typical details are shown on contract drawing PLATE # 9. All work shall be performed in accordance with Section 07 60 00. Unit of measurement shall be linear meters (LM) of installed expansion joints. Dimensions and locations will be specified on the task order.	200	LM	
A843	**Re-sealing of Expansion Joints.**	The Contractor shall perform the re-sealing of expansion joints with a silicone-rubber base mastic caulking. Existing joint caulking shall be completely removed and the surface area to receive new caulking shall be thoroughly cleaned and prepared. Typical details are shown on contract drawing PLATE # 9. All work shall be performed in accordance with Sections 07 60 00 & 07 92 00. Unit of measurement shall be linear meters (LM) of re-sealed expansion joint. Dimensions and locations will be specified on the task order.	320	LM	

ELIN	SHORT DESCRIPTION	FULL DESCRIPTION	EST QTY	UNIT OF ISSUE	UNIT PRICE (USD)
A844	**Forming of Slopes With Cellular Concrete.**	The Contractor shall perform the forming of slopes on existing concrete roof decks using cellular concrete. Averaged thickness of cellular concrete shall not exceed 10 cm. . Typical details are shown on contract drawing PLATES #'s 8, 9, 12, 13, 14, 15 & 16. All work shall be performed in accordance with Sections 07 55 00 & 07 52 00. Unit of measurement shall be square meters (SM), as computed by multiplying, in meters, area length by width (L x W) , including all overlaps, overhangs, around roofing equipment/vents. Vertical walls and general obstructions 30.48 cm. (one foot) and under and all vertical walls over 30.48 cm (one foot) should be added to the square meter total. Dimensions and locations will be specified on the task order.	1,000	SM	
A845	**Installation of Roof Mounted Duct and Equipment Supports.**	The Contractor shall perform the installation of roof mounted duct and equipment supports. Typical details are shown on contract drawing PLATE # 15. All work shall be performed in accordance with Section 07 60 00. Unit of measurement shall be each (EA) installed roof mounted duct and/or equipment supports. Quantities and locations will be specified on the task order.	10	EA	
A846	**Replacement of Drain Sumps and Strainers.**	The Contractor shall perform the replacement of existing drain sumps and strainers. Work , including demolition of existing concrete roof deck, removal of existing drain sump and strainer, installation of new roof drain sumps and strainers and patching of roof deck. Typical details are shown on contract drawing PLATE # 16. All work shall be performed in accordance with Section 07 60 00. Unit of measurement shall be each (EA) replaced roof drain sump and strainer. Quantities and locations will be specified on the task order.	10	EA	
A847	**Replacement of Pre-Cast Concrete Parapet Copings.**	The Contractor shall perform the replacement of pre-cast concrete parapet copings. Work includes demolition and removal of existing pre-cast concrete parapet roof copings, installation of new pre-cast concrete parapet copings, patching of parapet walls and repainting to match adjacent surfaces. Typical details are shown on contract drawing PLATES #'s 8 & 13. All work shall be performed in accordance with Section 03 31 01.00 10.Unit of measurement shall be linear meters (LM) of replaced pre-cast concrete parapet copings. Dimensions and locations will be specified on the delivery order. Unit of measurement shall be linear meters (LM) of replaced pre-cast concrete parapet copings. Dimensions and locations will be specified on the task order.	50	LM	
A848	**Installation of Pre-Cast Concrete Down Spout Splash Blocks.**	The Contractor shall perform the installation of pre-cast concrete down spout splash blocks. Typical details are shown on contract drawing PLATE # 10 . All work shall be performed in accordance with Section 03 31 01.00 10. Unit of measurement shall be each (EA) installed pre-cast concrete splash block. Quantities and locations will be specified on the task order.	10	EA	
A849	**Installation of Scupper Drains.**	The Contractor shall perform the installation of scupper drains in existing roof parapet walls. Typical details are shown on contract drawing PLATE # 16. All work shall be performed in accordance with Section 07 60 00. Unit of measurement shall be each (EA) installed scupper drain. Quantities and locations will be specified on the task order.	10	EA	

ELIN	SHORT DESCRIPTION	FULL DESCRIPTION	EST QTY	UNIT OF ISSUE	UNIT PRICE (USD)
A850	**Rubber Paint over Existing Roofing.**	The Contractor shall perform the application of rubber paint coating on existing pre-formed and/or corrugated metal sheet, asbestos-cement, concrete, and Ceramic Tiles roofs. Work includes application of rubber paint coating over existing roofing. All work shall be performed in accordance with Section 09 90 00. Unit of measurement shall be square meters (SM), as computed by multiplying, in meters, area length by width (L x W) , including all overlaps, overhangs, around roofing equipment/vents. Vertical walls and general obstructions 30.48 cm. (one foot) and under and all vertical walls over 30.48 cm (one foot) should be added to the square meter total. Dimensions and locations will be specified on the task order.	1,500	SM	
A851	**Emergency repairs for roofing leaks.**	The Contractor shall perform emergency repairs on roofing leaks within the limits threshold of 16 hours of labor and $3,000 of direct material cost. Emergency repairs shall be responded within 4 hours of the Government notification during Government regular working hours. If the emergency repair exceed the threshold contractor shall provide a Cost Proposal. Dimensions and locations will be specified on the task order. Contractor shall protect all the building interior area affected by the roof leak to prevent any damage.	10	EA	
A900	**Exterior Paint extending from the ground level up to 3.75 LM above ground level.**	The Contractor shall prepare the surface and paint in accordance with SECTION 09 90 00 Paints and Coatings, this ELIN includes all the exterior surfaces up to 3.75LM above ground level and comprise all the surfaces included in the paint tables of SECTION 09 90 00. Locations and paint colors will be specified on each the task order or shall match to the existing color. The measurement method is provided in J-1503040-04	10,000	SM	
A901	**Exterior Paint extending from 3.75LM above ground level up to 30LM above ground level.**	The Contractor shall prepare the surface and paint in accordance with SECTION 09 90 00 Paints and Coatings, this ELIN includes all the exterior surfaces from 3.75LM above ground level up to 30LM above ground level, and comprise all the surfaces included in the paint tables of SECTION 09 90 00. Locations and paint colors will be specified on each the task order or shall match to the existing color. The measurement method is provided in J-1503040-04.	20,000	SM	
A902	**Interior Paint extending from the floor level up to 3.75LM above ground level.**	The Contractor shall prepare the surface and paint in accordance with SECTION 09 90 00 Paints and Coatings, this ELIN includes all the interior surfaces up to 3.75LM above floor level and comprise all the surfaces included in the paint tables of SECTION 09 90 00. Locations and paint colors will be specified on each the task order or shall match to the existing color. The measurement method is provided in J-1503040-04.	15,000	SM	
A903	**Interior Paint extending from 3.75LM above floor level up to 30LM above floor level.**	The Contractor shall prepare the surface and paint in accordance with SECTION 09 90 00 Paints and Coatings, this ELIN includes all the interior surfaces up to 3.75LM above floor level and comprise all the surfaces included in the paint tables of SECTION 09 90 00. Locations and paint colors will be specified on each the task order or shall match to the existing color. The measurement method is provided in J-1503040-04.	30,000	SM	
A1000	**Unit Priced Un-Skilled Labor Work (negotiated)**	Includes all labor and supervision required to perform miscellaneous un-skilled work. Unskilled labor includes, but is not limited to the following types of trades: Laborer, Small Equipment Operator, Helper, etc. Dimensions and locations will be specified on the task order.	600	HR	

ELIN	SHORT DESCRIPTION	FULL DESCRIPTION	EST QTY	UNIT OF ISSUE	UNIT PRICE (USD)
A1001	**Miscellaneous Costs (negotiated)**	Includes all materials, equipment, and subcontracted effort required to perform miscellaneous work. Costs for materials, equipment, and subcontractor effort, not covered under any UPT, shall be negotiated as required for each task order. Units, dimensions, and locations will be specified on the task order.	1	LOT	

EXHIBIT LINE ITEM NUMBERS					
SOLICITATION NO. N33191-15-R-XXXX					
PROVIDE UNIT PRICES FOR INDEFINITE DELIVERY INDEFINITE QUANTITY WORK					
ELINs B700 through B1001					
First Period - Indefinite Quantity Work					
ELIN	**SHORT DESCRIPTION**	**FULL DESCRIPTION**	**EST QTY**	**UNIT OF ISSUE**	**UNIT PRICE (USD)**
B700	**Demolition and Removal of Bituminous Asphalt Pavement**	The Contractor shall perform the demolition and removal of existing bituminous asphalt pavement. The asphalt pavement shall be saw cut, to a minimum depth of 10 cm, extending out 30.5 cm beyond the edge of the aggregate base to be removed. All saw cuts shall be made with vertical straight faces making one pair of faces at right angles to traffic flow. Typical details are shown on contract drawing PLATE # 10. Broken pavement, debris and resulting loose material shall be removed from limits of the station daily. All work shall be performed in accordance with Sections 01 57 19.00 20 - "Temporary Environmental Controls" & 02 41 00 - "Demolition". Unit of measurement shall be square meters (SM), as computed by multiplying, in meters, area length by width (L x W). Dimensions and locations will be specified on the task order.	7,500	SM	
B701	**Demolition and Removal of Aggregate Base**	The Contractor shall perform the demolition and removal of existing aggregate to a minimum depth of 20 cm. Typical details will be provided with each task order. Debris and resulting loose material shall be removed from limits of the station daily. All work shall be performed in accordance with Sections 01 57 19.00 20 - "Temporary Environmental Controls" & 02 41 00 - "Demolition". Unit of measurement shall be cubic meters (CM), as computed by multiplying, in meters, area length by width by depth (L x W x D). Dimensions and locations will be specified on the task order.	1,875	CM	
B702	**Removal and Reinstallation or Disposal of Concrete Wheel Stops**	The Contractor shall perform the removal and reinstallation or disposal of existing concrete wheel stops. All work shall be performed in accordance with Sections 01 57 19.00 20 - "Temporary Environmental Controls" & 02 41 00 - "Demolition". Unit of measurement shall be Each (EA). Units and locations will be specified on the task order.	100	EA	
B703	**Demolition and Removal of Concrete Curbs**	The Contractor shall perform the demolition and removal of existing pre-cast concrete curbs. All work shall be performed in accordance with Section 01 57 19.00 20 - "Temporary Environmental Controls" & 02 41 00 - "Demolition". Unit of measurement shall be linear meters (LM). Units and locations will be specified on the task order.	125	LM	
B704	**Demolition and Removal of Storm Drainage Headwalls**	The Contractor shall perform the demolition and removal of existing storm drainage headwalls. Broken concrete, debris and resulting loose material shall be removed from limits of the station daily. All work shall be performed in accordance with Section 01 57 19.00 20 - "Temporary Environmental Controls" & 02 41 00 - "Demolition". Unit of measurement shall be Each (EA). Units and locations will be specified on the task order.	4	EA	
B705	**Demolition and Removal of Concrete Pipe Culverts**	The Contractor shall perform the removal of existing pipe culverts. Old culvert pipe, debris and resulting loose material shall be removed from limits of the station daily. All work shall be performed in accordance with Section 01 57 19.00 20 - "Temporary Environmental Controls" & 02 41 00 - "Demolition". Unit of measurement shall be linear meters (LM). Units and locations will be specified on the task order.	100	LM	

ELIN	SHORT DESCRIPTION	FULL DESCRIPTION	EST QTY	UNIT OF ISSUE	UNIT PRICE (USD)
B706	**Demolition and Removal of Concrete Sidewalks**	The Contractor shall perform demolition and removal of existing concrete sidewalks, all as indicated on the contract task order and site plans (as applicable). Where required and indicated, concrete shall be saw cut. Typical details will be provided with each task order. Broken concrete, debris and resulting loose material shall be removed from limits of the station daily. All work shall be performed in accordance with Sections 01 57 19.00 20-"Temporary Environmental Controls" & 02 41 00-"Demolition". Unit of measurement shall be square meters (SM), as computed by multiplying, in meters, area length by width (L x W) considering an average depth of 0.1m . Dimensions and locations will be specified on the task order.	1,500	SM	
B707	**Cold Milling of Bituminous Asphalt Pavements**	The Contractor shall perform cold milling 6 cm depth on existing bituminous asphalt pavement. All debris and resulting loose milled material shall be removed from limits of the station daily. All work shall be performed in accordance with Sections 32 0116 17 - "Cold Milling". This ELIN# may be ordered in conjunction with work ordered under ELIN's #A735. Unit of measurement shall be square meters (SM), as computed by multiplying, in meters, area length by width (L x W). Dimensions and locations will be specified on the task order.	6,800	SM	
B708	**Earthwork for Construction of Bituminous Asphalt Pavements**	The Contractor shall perform the general earthwork required for the construction of bituminous asphalt paved roads and parking lots. The work includes performing site preparation, excavation, compaction, removal of excess material and grading, all as necessary to construct bituminous asphalt paved roads, and parking lots at the finished grade and elevations indicated. Typical details are shown on contract drawing PLATE #'s 7 & 8. All work shall be performed in accordance with Section 31 23 00.00 20 - "Excavation and Fill". Unit of measurement shall be cubic meters (CM), as computed by multiplying, in meters, area length by width by depth (L x W x D). Dimensions, slopes and finished grade will be specified on the task order.	1,700	CM	
B709	**Earthwork for Storm Sewer Pipe (4 meter max. depth)**	The Contractor shall perform the general excavation required for the installation storm drainage pipe. The work includes performing site preparation, excavation, installation of granular pipe bedding, backfill, compacting, removal of excess material and grading, all as necessary to install storm sewer pipe and other related appurtenances at the finished grade and elevations indicated. Maximum depth shall be 4 meter. Typical details are shown on contract drawing PLATE # 1. All work shall be performed in accordance with Section 31 23 00.00 20 - "Excavation and Fill". Unit of measurement shall be cubic meters (CM), as computed by multiplying, in meters, length by width by depth (L x W x D). Dimensions, slopes and finished grade will be specified on the task order.	150	CM	

ELIN	SHORT DESCRIPTION	FULL DESCRIPTION	EST QTY	UNIT OF ISSUE	UNIT PRICE (USD)
B710	**Earthwork for Storm Sewer Manholes (4 meter max. depth)**	The Contractor shall perform the general excavation required for the construction of storm sewer manholes. The work includes performing site preparation, excavation, backfill, compacting, removal of excess material and grading, all as necessary to install storm sewer manholes at the finished grade and elevations indicated. Maximum depth shall be 4 meter. Typical details are shown on contract drawing PLATE # 2. All work shall be performed in accordance with Section 31 23 00.00 20 - "Excavation and Fill". Unit of measurement shall be cubic meters (CM), as computed by multiplying, in meters, length by width by depth (L x W x D). Dimensions, slopes and finished grade will be specified on the task order.	60	CM	
B711	**Earthwork For Storm Drainage Channels/Reshaping (4 meter max. depth)**	The Contractor shall perform the general excavation required for the construction of storm drainage channels. The work includes performing site preparation, excavation for new channel and reshaping for old channel, backfill, compaction, installation of organic mat, removal of excess material and grading, all as necessary to construct storm drainage channels at the finished grade and elevations indicated. Typical details are shown on contract drawing PLATE # 3. All work shall be performed in accordance with Section 31 23 00.00 20 - "Excavation and Fill". Unit of measurement shall be cubic meters (CM), as computed by multiplying, in meters, length by width by depth (L x W x D). Dimensions, slopes and finished grade will be specified on the task order.	150	CM	
B712	**Earthwork for Construction of Sidewalks**	The Contractor shall perform the general earthwork required for the construction of concrete sidewalks. The work includes performing site preparation, excavation, compaction, and removal of excess material and grading, all as necessary to construct concrete sidewalks at the finished grade and elevations indicated. Typical details are shown on contract drawing PLATE #'18. All work shall be performed in accordance with Section 31 00 00 -"Earthwork". Unit of measurement shall be square meters (SM), as computed by multiplying, in meters, area length by width (L x W) considering an average depth of 0.1m . Dimensions and locations will be specified on the task order.	1,500	SM	
B713	**Concrete Storm Sewer Pipe (Ø20 cm)**	The Contractor shall perform the installation of 20 cm. diameter concrete storm drainage pipe. The work includes providing granular pipe bedding material, concrete storm drainage pipe, fittings and joints at the finished grade and elevations indicated. Typical details are shown on contract drawing PLATE # 1. All work shall be performed in accordance with Sections 31 23 00.00 20 - "Excavation and Fill" and 33 40 01 - "Storm Drainage". Unit of measurement shall be linear meters (LM). Dimensions, slopes and locations will be specified on the task order.	50	LM	
B714	**Concrete Storm Sewer Pipe (Ø30 cm)**	The Contractor shall perform the installation of 30 cm. diameter concrete storm drainage pipe. The work includes providing granular pipe bedding material, concrete storm drainage pipe, fittings and joints at the finished grade and elevations indicated. Typical details are shown on contract drawing PLATE # 1. All work shall be performed in accordance with Sections 31 23 00.00 20 - "Excavation and Fill" and 33 40 01 - "Storm Drainage". Unit of measurement shall be linear meters (LM). Dimensions, slopes and locations will be specified on the task order.	50	LM	

ELIN	SHORT DESCRIPTION	FULL DESCRIPTION	EST QTY	UNIT OF ISSUE	UNIT PRICE (USD)
B715	**Concrete Storm Sewer Pipe (Ø40 cm)**	The Contractor perform the installation of 40 cm. diameter concrete storm drainage pipe. The work includes providing granular pipe bedding material, concrete storm drainage pipe, fittings and joints at the finished grade and elevations indicated. Typical details are shown on contract drawing PLATE # 1. All work shall be performed in accordance with Sections 31 23 00.00 20 - “Excavation and Fill” and 33 40 01 - “Storm Drainage”. Unit of measurement shall be linear meters (LM). Dimensions, slopes and locations will be specified on the task order.	50	LM	
B716	**Concrete Storm Sewer Pipe (Ø50 cm)**	The Contractor shall perform the installation of 50 cm. diameter concrete storm drainage pipe. The work includes providing granular pipe bedding material, concrete storm drainage pipe, fittings and joints at the finished grade and elevations indicated. Typical details are shown on contract drawing PLATE # 1. All work shall be performed in accordance with Sections 31 23 00.00 20 - “Excavation and Fill” and 33 40 01 - “Storm Drainage". Unit of measurement shall be linear meters (LM). Dimensions, slopes and locations will be specified on the task order.	50	LM	
B717	**Concrete Storm Sewer Pipe (Ø60 cm)**	The Contractor shall perform the installation of 60 cm. diameter concrete storm drainage pipe. The work includes providing granular pipe bedding material, concrete storm drainage pipe, fittings and joints at the finished grade and elevations indicated. Typical details are shown on contract drawing PLATE # 1. All work shall be performed in accordance with Sections 31 23 00.00 20 - “Excavation and Fill” and 33 40 01 - “Storm Drainage”. Unit of measurement shall be linear meters (LM). Dimensions, slopes and locations will be specified on the task order.	50	LM	
B718	**PVC Storm Sewer Pipe (Ø12.5 cm)**	The Contractor shall perform the installation of 12.5 cm. diameter PVC storm drainage pipe. The work includes providing granular pipe bedding material, PVC storm drainage pipe, fittings and joints at the finished grade and elevations indicated. Typical details are shown on contract drawing PLATE # 3. All work shall be performed in accordance with Sections 31 23 00.00 20 - “Excavation and Fill” and 33 40 01 - “Storm Drainage”. Unit of measurement shall be linear meters (LM). Dimensions, slopes and locations will be specified on the task order.	50	LM	
B719	**PVC Storm Sewer Pipe (Ø16 cm)**	The Contractor shall perform the installation of 16 cm. diameter PVC storm drainage pipe. The work includes providing granular pipe bedding material, PVC storm drainage pipe, fittings and joints at the finished grade and elevations indicated. Typical details are shown on contract drawing PLATE # 3. All work shall be performed in accordance with Sections 31 23 00.00 20 - “Excavation and Fill” and 33 40 01 - “Storm Drainage”. Unit of measurement shall be linear meters (LM). Dimensions, slopes and locations will be specified on the task order.	50	LM	
B720	**PVC Storm Sewer Pipe (20 cm)**	The Contractor shall perform the installation of 20 cm. diameter PVC storm drainage pipe. The work includes providing granular pipe bedding material, PVC storm drainage pipe, fittings and joints at the finished grade and elevations indicated. Typical details are shown on contract drawing PLATE # 3. All work shall be performed in accordance with Sections 31 23 00.00 20 - “Excavation and Fill” and 33 40 01 - “Storm Drainage”. Unit of measurement shall be linear meters (LM). Dimensions, slopes and locations will be specified on the task order.	50	LM	

ELIN	SHORT DESCRIPTION	FULL DESCRIPTION	EST QTY	UNIT OF ISSUE	UNIT PRICE (USD)
B721	**PVC Storm Sewer Pipe (Ø25 cm)**	The Contractor shall perform the installation of 25 cm. diameter PVC storm drainage pipe. The work includes providing granular pipe bedding material, PVC storm drainage pipe, fittings and joints at the finished grade and elevations indicated. Typical details are shown on contract drawing PLATE # 1. All work shall be performed in accordance with Sections 31 23 00.00 20 - "Excavation and Fill" and 33 40 01 - "Storm Drainage". Unit of measurement shall be linear meters (LM). Dimensions, slopes and locations will be specified on the task order.	50	LM	
B722	**PVC Storm Sewer Pipe (Ø31.5 cm)**	The Contractor shall perform the installation of 31.5 cm. diameter PVC storm drainage pipe. The work includes providing granular pipe bedding material, PVC storm drainage pipe, fittings and joints at the finished grade and elevations indicated. Typical details are shown on contract drawing PLATE # 1. All work shall be performed in accordance with Sections 31 23 00.00 20 - "Excavation and Fill" and 33 40 01 - "Storm Drainage". Unit of measurement shall be linear meters (LM). Dimensions, slopes and locations will be specified on the task order.	50	LM	
B723	**PVC Storm Sewer Pipe (Ø40 cm)**	The Contractor shall perform the installation of 40 cm. diameter PVC storm drainage pipe. The work includes providing granular pipe bedding material, PVC storm drainage pipe, fittings and joints at the finished grade and elevations indicated. Typical details are shown on contract drawing PLATE # 1. All work shall be performed in accordance with Sections 31 23 00.00 20 - "Excavation and Fill" and 33 40 01 - "Storm Drainage". Unit of measurement shall be linear meters (LM). Dimensions, slopes and locations will be specified on the task order.	50	LM	
B724	**Construct Storm Drainage Headwalls**	The Contractor shall perform the construction of reinforced concrete headwalls. The work includes performing site preparation, excavation and /or fill, forming, reinforcement, concrete placement, backfill, compaction, removal of excess material and grading, all as necessary to construct concrete storm drainage headwalls at the finished grades and elevations indicated. Typical details are shown on contract drawing PLATE # 5. All work shall be performed in accordance with Sections 31 23 00.00 20 - "Excavation and Fill", 33 40 01 - "Storm Drainage", and 03 33 00 -"Cast-In-Place Architectural Concrete". Unit of measurement shall be Each (EA). Units and locations will be specified on the task order.	4	EA	
B725	**Install Pre-Cast Storm Sewer Manhole (0 - 1 meter depth)**	The Contractor shall perform the installation of pre-cast concrete storm sewer manholes. The work includes supply, delivery and installation of pre-cast concrete manholes, including manhole base, riser, eccentric cone, frames and covers, as applicable, and connection of pipe, all as necessary for the construction of concrete storm drainage manholes at the finished grades and elevations indicated. Typical details are shown on contract drawing PLATE # 2. All work shall be performed in accordance with Sections 31 23 00.00 20 - "Excavation and Fill", 33 40 01 - "Storm Drainage", 03 33 00 -"Cast-In-Place Architectural Concrete". Unit of measurement shall be EA (EA). Units and locations will be specified on the task order.	5	EA	

ELIN	SHORT DESCRIPTION	FULL DESCRIPTION	EST QTY	UNIT OF ISSUE	UNIT PRICE (USD)
B726	**Install Pre-Cast Storm Sewer Manhole (1 - 3 meter depth)**	The Contractor shall perform the installation of pre-cast concrete storm sewer manholes. The work includes supply, delivery and installation of pre-cast concrete manholes, including manhole base, riser, eccentric cone, frames and covers, as applicable, and connection of pipe, all as necessary for the construction of concrete storm drainage manholes at the finished grades and elevations indicated. Typical details are shown on contract drawing PLATE # 2. All work shall be performed in accordance with Sections 31 23 00.00 20 - "Excavation and Fill", 33 40 01 - "Storm Drainage", 03 33 00 -"Cast-In-Place Architectural Concrete". Unit of measurement shall be Each (EA). Units and locations will be specified on the task order.	5	EA	
B727	**Install Pre-cast Concrete Storm Drainage Catch Basin**	The Contractor shall perform the installation of pre-cast concrete storm drainage catch basins. The work includes excavation, supply, delivery and installation of pre-cast concrete catch basins, including base, riser, frames and grating, as applicable, and connection to piping, all as necessary for the construction of concrete storm drainage catch basins at the finished grades and elevations indicated. Typical details are shown on contract drawing PLATE # 6. All work shall be performed in accordance with Sections 31 23 00.00 20 - "Excavation and Fill", 33 40 01 - "Storm Drainage". Unit of measurement shall be Each (EA). Units and locations will be specified on the task order.	6	EA	
B728	**Construct Brick Storm Drainage Catch Basin**	The Contractor shall perform the fabrication of brick storm drainage catch basins. The work includes excavation, brick work, armored concrete base, riser, walls, patching and finish, frames and grating, as applicable, and connection to piping, all as necessary for the construction of brick storm drainage catch basins at the finished grades and elevations indicated. All work shall be performed in accordance with Sections 31 23 00.00 20 - "Excavation and Fill", 33 40 01 - "Storm Drainage". Unit of measurement shall be Each (EA). Units and locations will be specified on the task order.	12	EA	
B729	**Install Rip-Rap Storm Drainage Channel Lining**	The Contractor shall install rip-rap storm drainage channel lining. The work includes supply, delivery and installation of rip-rap channel lining. Typical detail is shown on contract drawing PLATE # 4. All work shall be performed in accordance with Sections 31 23 00.00 20 - "Excavation and Fill", 33 40 01 - "Storm Drainage", and 03 33 00 -"Cast-In-Place Architectural Concrete". Unit of measurement shall be square meters (SM), as computed by multiplying, in meters, area length by width, (L x W). Dimensions and locations will be specified on the task order.	50	SM	
B730	**Up-rise Manhole**	The Contractor shall perform the uprising of manhole. The work includes performing removal of frame and cover, bricks placement, reinstallation of frame and cover, removal of excess material and grading, all as necessary to up-rise manhole at the finished grades and elevations indicated. Typical details are shown on contract drawing PLATE # 2. All work shall be performed in accordance with Section 33 40 01 - "Storm Drainage Utilities". Unit of measurement shall be Each (EA). Units and locations will be specified on the task order.	5	EA	

ELIN	SHORT DESCRIPTION	FULL DESCRIPTION	EST QTY	UNIT OF ISSUE	UNIT PRICE (USD)
B731	**Up-rise Drainage Grate**	The Contractor shall perform the uprising of drainage grate. The work includes performing removal of frame and grate, bricks placement, reinstallation of frame and grate, removal of excess material and grading, all as necessary to up-rise drainage grate at the finished grades and elevations indicated. Typical details are shown on contract drawing PLATE # 6. All work shall be performed in accordance with Section 33 40 01 - "Storm Drainage". Unit of measurement shall be Each (EA). Units and locations will be specified on the task order.	5	EA	
B732	**Up-rise Valve or Meter Cover**	The Contractor shall perform the uprising of valve/meter cover. The work includes performing removal of frame and cover, bricks placement, reinstallation of frame and cover, removal of excess material and grading, all as necessary to up-rise frame and cover at the finished grades and elevations indicated. All work shall be performed in accordance with Section 33 40 01 - "Storm Drainage Utilities". Unit of measurement shall be Each (EA). Units and locations will be specified on the task order.	5	EA	
B733	**Aggregate Sub-Base Course for Bituminous Asphalt Pavements**	The Contractor shall perform the placement of crushed aggregate sub-base course for the bituminous asphalt pavement. The work includes performing site preparation, scarifying existing sub-grade, placement of ZA-40 aggregate sub-base, grading and compaction, as necessary for the construction of bituminous asphalt pavement. Minimum sub-base thickness for bituminous asphalt pavement shall be 20 cm compacted to 98% modified proctor density. When damage affects the base and sub-base courses, the damaged courses shall be entirely replaced with new material, which shall match the existing. Typical details are shown on contract drawing PLATE #"s 7, 8 & 10. All work shall be performed in accordance with Section 32 11 24 - "Graded Crushed Aggregate Base Course for Flexible Pavement". Unit of measurement shall be cubic meters (CM), as computed by multiplying, in meters, area length by width by depth, (L x W x D). Dimensions will be specified on the task order.	3,750	CM	
B734	**Aggregate Base Course for Bituminous Asphalt Pavements and Concrete Sidewalks**	The Contractor shall perform the placement of aggregate base course for bituminous asphalt pavement and concrete sidewalks. The work includes performing site preparation, placement of ZA-25 aggregate base, grading and compaction, as necessary for the construction of the bituminous asphalt pavement and concrete sidewalks. Minimum base thickness for bituminous asphalt pavement shall be 20cm compacted to 100% modified proctor density. Minimum base thickness for concrete sidewalks shall be 10 cm compacted to 98% modified proctor density. When damage affects the base and sub-base courses, the damaged courses shall be entirely replaced with new material. Typical details are shown on contract drawing PLATE #"s 7, 8, 10 & 18. All work shall be performed in accordance with Section 32 11 24 - "Graded Crushed Aggregate Base Course for Flexible Pavement". Unit of measurement shall be cubic meters (CM), as computed by multiplying, in meters, area length by width by depth, (L x W x D). Dimensions will be specified on the task order.	5,250	CM	

ELIN	SHORT DESCRIPTION	FULL DESCRIPTION	EST QTY	UNIT OF ISSUE	UNIT PRICE (USD)
B735	**Bituminous Asphalt Pavement Crack Sealing**	The Contractor shall perform crack repair in existing asphalt pavements. The work includes site preparation, cleaning and sealing of cracks by application of hot-poured asphalt cement or bitumen sealant. Typical details are shown on contract drawing PLATE # 9. All work shall be performed in accordance with Section 32 12 11 - "Bituminous Surface Treatment" or Section 32 01 22 "Bituminous Rejuvenation: Slurry Seal". Unit of measurement shall be linear meters (LM), as computed by measurement, in meters, area length (L). Work ordered under this ELIN may be in conjunction with work ordered under ELINS # A738 or #A739.	375	LM	
B736	**Bituminous Asphalt Pavement Repair**	The Contractor shall perform repair of existing bituminous asphalt pavement. The work includes surface preparation, supply, delivery and placement of 10cm compacted hot bituminous asphalt cement and primer coat. Typical details are shown on contract drawing PLATE #10. All work shall be performed in accordance with Section 32 12 17 - "Hot Mix Bituminous Pavement" and Section 32 12 10 – "Bituminous Tack and Prime Coats". Unit of measurement shall be square meters (SM), as computed by multiplying, in meters, area length by width, (L x W).	6,300	SM	
B737	**Bituminous Asphalt Pavement Overlay**	The Contractor shall perform the application of bituminous asphalt pavement overlay to the existing pavement. The work includes surface preparation, supply, delivery, placement of 6 cm compacted hot bituminous asphalt cement D 12 wearing coat and tack coat. Typical details are shown on contract drawing PLATE # 11. All work shall be performed in accordance with Sections 32 12 17 - "Hot Mix Bituminous Pavement" and Section 32 12 10 – "Bituminous Tack and Prime Coats". Unit of measurement shall be square meters (SM), as computed by multiplying, in meters, area length by width, (L x W). Work ordered under this ELIN may be in conjunction with work ordered under ELIN's # A707	10,300	SM	
B738	**Bituminous Asphalt Pavement Slurry Seal**	The Contractor shall perform the application of slurry seal on existing pavement. The work includes all labor, materials, equipment, supervision and transportation required to perform the application of asphalt slurry seal to existing asphalt pavement. The work includes surface preparation, and application of asphalt slurry seal. Typical details are shown on contract drawing PLATE # 17. All work shall be performed in accordance with Sections 32 12 17 -"Bituminous Hot Mix Pavement" and 32 01 22 - "Bituminous Rejuvenation: Slurry Seal". Unit of measurement shall be square meters (SM), as computed by multiplying, in meters, area length by width, (L x W). Dimensions will be specified on the task order. Work ordered under this ELIN may be in conjunction with work ordered under ELINS # A735 and/or #A736.	1,500	SM	

ELIN	SHORT DESCRIPTION	FULL DESCRIPTION	EST QTY	UNIT OF ISSUE	UNIT PRICE (USD)
B739	**Bituminous Asphalt Pavement Surface Treatment**	The Contractor shall perform treatment on the bituminous asphalt pavement. The work includes all labor, materials, equipment, supervision and transportation required to perform the application of bituminous surface treatment. The work includes surface preparation and application of bituminous surface treatment. Typical details are shown on contract drawing PLATE # 17. All work shall be performed in accordance with Sections 32 12 17 Hot Mix Bituminous Pavement & Section 32 12 11-"Bituminous Surface Treatment". Unit of measurement shall be square meters (SM), as computed by multiplying, in meters, area length by width, (L x W). Dimensions will be specified on the task order. Work ordered under this ELIN may be in conjunction with work ordered under ELINS # A735 and/or #A736.	15,300	SM	
B740	**New Bituminous Asphalt Pavement**	The Contractor shall perform the application of new bituminous asphalt pavement. The work includes surface preparation, supply, delivery, placement of a 6 cm compacted bituminous asphalt pavement S 20 binder course, primer coat, 4 cm compacted bituminous asphalt pavement D 12 wearing course, and tack coat. Typical details are shown on contract drawing PLATE #'s 7 & 8. All work shall be performed in accordance with Section 32 12 17 - "Hot Mix Bituminous Pavement". Unit of measurement shall be square meters (SM), as computed by multiplying, in meters, area length, by width, (L x W). Dimensions will be specified on the task order. Work ordered under this ELIN may be in conjunction with work ordered under ELIN's #A700, A708,& A734.	20,300	SM	
B741	**Obliteration of Existing Bituminous Asphalt Pavement Road Markings**	The Contractor shall perform the obliteration of existing road markings. All work shall be performed in accordance with Section 32 17 23.00 20-"Pavement Markings". Unit of measurement shall be square meters (SM) of painted area, as computed by multiplying, in meters, area length, by width, (L x W). Dimensions and locations will be specified on the task order.	850	SM	
B742	**Paint Solid Pavement Lines**	The Contractor shall perform the painting of solid pavement lines. The work includes surface preparation and painting of 10 cm wide solid pavement lines. Application of this ELIN will be used for pavement lateral lines, parking stall and diagonal no-parking lines. All work shall be performed in accordance with Section 32 17 23.00 20 -"Pavement Markings". Unit of measurement shall be linear meters (LM) of painted area. Paint colors, dimensions and locations will be specified on the task order.	1,700	LM	
B743	**Paint Reflective Solid Pavement Lines**	The Contractor shall perform the painting of solid reflective pavement lines. The work includes surface preparation and painting of 10 cm (4 inch) wide solid pavement lines. Application of this ELIN will be used for pavement center and lateral lines only. All work shall be performed in accordance with Section 32 17 23.00 20 -"Pavement Markings". Unit of measurement shall be linear meters (LM) of painted area. Paint colors, dimensions and locations will be specified on the task order.	1,300	LM	

ELIN	SHORT DESCRIPTION	FULL DESCRIPTION	EST QTY	UNIT OF ISSUE	UNIT PRICE (USD)
B744	**Paint Center Pavement Lines**	The Contractor shall perform the painting of center pavement lines. The work includes surface preparation and painting of 10 cm wide center pavement lines. Application of this ELIN will be used for pavement lateral lines, parking stall and diagonal no-parking lines. All work shall be performed in accordance with Section 32 17 23.00 20 -"Pavement Markings". Unit of measurement shall be linear meters (LM) of painted area. Paint colors, dimensions and locations will be specified on the task order.	1,300	LM	
B745	**Paint Reflective Center Pavement Lines**	The Contractor shall perform the painting of center reflective pavement lines. The work includes surface preparation and painting of 10 cm (4 inch) wide reflective center pavement lines. Application of this ELIN will be used for pavement center and lateral lines only. All work shall be performed in accordance with Section 32 17 23.00 20 -"Pavement Markings". Unit of measurement shall be linear meters (LM) of painted area. Paint colors, dimensions and locations will be specified on the task order.	250	LM	
B746	**Paint Concrete Wheel Stops and Curbs**	The Contractor shall perform the painting of existing concrete wheel stops and pavement curbs. The work includes surface preparation and painting of all designated exposed surfaces. All work shall be performed in accordance with Section 32 17 23.00 20 -"Pavement Markings". Unit of measurement shall be square meters (SM) of painted area, as computed by multiplying actual dimensions of paint length, by width, (L x W). Paint colors, dimensions and locations will be specified on the task order.	250	SM	
B747	**Paint Pedestrian Crosswalk Markings**	The Contractor shall perform the painting of pedestrian crosswalk markings. The work includes surface preparation and painting. Typical details are shown on contract drawing PLATE # 14. All work shall be performed in accordance with Section 32 17 23.00 20 -"Pavement Markings". Unit of measurement shall be square meters (SM) of actual painted area, as computed by multiplying actual dimensions of paint length, by width, (L x W). Paint colors and locations will be specified on the task order.	200	SM	
B748	**Paint Reflective Pedestrian Crosswalk Markings**	The Contractor shall perform the painting of reflective pedestrian crosswalk markings. The work includes surface preparation and painting. Typical details are shown on contract drawing PLATE # 14. All work shall be performed in accordance with Section 32 17 23.00 20 -"Pavement Markings". Unit of measurement shall be square meters (SM) of actual painted area, as computed by multiplying actual dimensions of paint length, by width, (L x W). Paint colors and locations will be specified on the task order.	200	SM	
B749	**Paint Stop Markings**	The Contractor shall perform the painting of stop markings. The work includes surface preparation and painting. Typical details are shown on contract drawing PLATE # 14. All work shall be performed in accordance with Section 32 17 23.00 20 -"Pavement Markings". Unit of measurement shall be square meters (SM) of actual painted area, as computed by multiplying actual dimensions of paint length, by width, (L x W). Paint colors and locations will be specified on the task order.	40	SM	

ELIN	SHORT DESCRIPTION	FULL DESCRIPTION	EST QTY	UNIT OF ISSUE	UNIT PRICE (USD)
B750	**Paint Reflective Stop Markings**	The Contractor shall perform the painting of reflective stop markings. The work includes surface preparation and painting. Typical details are shown on contract drawing PLATE # 14. All work shall be performed in accordance with Section 32 17 23.00 20-"Pavement Markings". Unit of measurement shall be square meters (SM) of actual painted area, as computed by multiplying actual dimensions of paint length, by width, (L x W). Paint colors and locations will be specified on the task order.	40	SM	
B751	**Paint Yield Markings**	The Contractor shall perform the painting of yield markings. The work includes surface preparation and painting. Typical details are shown on contract drawing PLATE # 15. All work shall be performed in accordance with Section 32 17 23.00 20 -"Pavement Markings". Unit of measurement shall be Each (EA). Paint colors and locations will be specified on the task order.	13	EA	
B752	**Paint Reflective Yield Markings**	The Contractor shall perform the painting of yield markings. The work includes surface preparation and painting. Typical details are shown on contract drawing PLATE # 15. All work shall be performed in accordance with Section 32 17 23.00 20 -"Pavement Markings". Unit of measurement shall be Each (EA). Paint colors and locations will be specified on the task order.	13	EA	
B753	**Paint Direction Arrows Markings**	The Contractor shall perform the painting of directional arrow markings. The work includes surface preparation and painting. Typical details are shown on contract drawing PLATE # 15. All work shall be performed in accordance with Section 32 17 23.00 20 -"Pavement Markings". Unit of measurement shall be EA (EA). Paint colors and locations will be specified on the task order. Unit of measurement shall be Each (EA). Paint colors and locations will be specified on the task order.	25	EA	
B754	**Paint Reflective Direction Arrows Markings**	The Contractor shall perform the painting of reflective directional arrow markings. The work includes surface preparation and painting. Typical details are shown on contract drawing PLATE # 15. All work shall be performed in accordance with Section 32 17 23.00 20 -"Pavement Markings". Unit of measurement shall be Each (EA). Paint colors and locations will be specified on the task order.	13	EA	
B755	**Paint Special Markings**	The Contractor shall perform the painting of special pavement markings, such as but not limited to, handicap parking symbols and "NO PARKING" letters. The work includes surface preparation and painting. Typical details are shown on contract drawing PLATE # 14. All work shall be performed in accordance with Section 32 17 23.00 20 -"Pavement Markings". Unit of measurement shall be square meters (SM) of actual painted area, as computed by multiplying actual dimensions of paint area length, by width, (L x W). Paint colors and locations will be specified on the task order.	25	SM	
B756	**Pavement Traffic Road Reflectors**	The Contractor shall perform the installation of pavement traffic reflectors. The work includes supply, delivery, surface preparation and installation. All work shall be performed in accordance with Section 32 17 23.00 20 - "Pavement Markings". Unit of measurement shall be Each (EA). Reflector colors and locations will be specified on the task order.	25	EA	

ELIN	SHORT DESCRIPTION	FULL DESCRIPTION	EST QTY	UNIT OF ISSUE	UNIT PRICE (USD)
B757	**Pavement Striping**	The Contractor shall perform the re-striping of existing striped roads and to stripe newly paved or otherwise un-striped roads, in accordance with the Spanish law and PG-3. The work shall include all types of solid and reflective striping and pavement marking of all types, including but not limited to: obliteration of existing road markings, solid and broken striping center and lateral striping, pavement traffic reflectors, all pavement edge markings, turning radius markings, pedestrian crosswalk markings, directional arrows, stop or yield pavement markings, and any special markings required. Typical details are shown on contract drawing PLATE #'S 14, & 15. All work shall be performed in accordance with Section 32 17 23.00 20 -"Pavement Markings". Unit of measurement shall be kilometer (KM) of painted area. Paint colors, dimensions and locations will be specified on the task order.	35	KM	
B758	**Parking Lot Striping**	The Contractor shall perform the re-striping of existing striped parking lots same as existing and to stripe newly paved or otherwise un-striped parking areas. The work shall include all types of solid and reflective striping and pavement marking of all types, including but not limited to: obliteration of existing markings, solid and broken striping, pavement traffic reflectors, all pavement edge makings, turning radius markings, pedestrian crosswalk markings, directional arrows, stop or yield pavement markings, any special markings required, and concrete wheel stops and curbs. Typical details are shown on contract drawing PLATE #'S 14, & 15. All work shall be performed in accordance with Section 32 17 23.00 20-"Pavement Markings". Unit of measurement shall be square meter (SM) of painted area. Paint colors, dimensions and locations will be specified on the task order.	37,500	SM	
B759	**Reinforced Sidewalks Construction**	The Contractor shall perform the construction of 10 cm thick reinforced concrete sidewalks. The work includes site preparation, construction and installation of forms, placement of WWF steel, concrete placement, installation of vapor barrier, installation of expansion joints and control joints, and finish. Typical details are shown on contract drawing PLATE #18. All work shall be performed in accordance with Section 03 33 00-"Cast-In-Place Architectural Concrete". Unit of measurement shall be square meter (SM), as computed by multiplying, in meters, area length, by width, (L x W). Dimensions will be specified on the task order. Work ordered under this ELIN may be in conjunction with work ordered under ELINS # A712 and #A734.	1,500	SM	
B760	**Concrete Wheel Stops**	The Contractor shall provide and install concrete wheel stops. The work includes fabrication and installation of concrete wheel stops. Typical wheel stop construction detail is shown on contract drawing PLATE # 16. All work shall be performed in accordance with Section 03 33 00 -"Cast-In-Place Architectural Concrete". Unit of measurement shall be each (EA). Units and locations will be specified on the task order.	50	EA	
B761	**Clean Culverts**	The Contractor shall clean culverts. The work includes removing dirt, debris and foreign matter that obstructs the interior of the culvert pipe. All work shall be performed in accordance with section 01 57 19.00 20 - "Temporary Environmental Controls". Unit of measurement shall be linear meters (LM). Units and locations will be specified on the task order.	100	LM	

ELIN	SHORT DESCRIPTION	FULL DESCRIPTION	EST QTY	UNIT OF ISSUE	UNIT PRICE (USD)
B762	**Clean Storm Drainage Channels**	The Contractor shall clean storm drainage channels. The work includes removing dirt, debris and foreign matter that obstructs the drainage channel. All work shall be performed in accordance with section 01 57 19.00 20 -"Temporary Environmental Controls". Unit of measurement shall be linear meters (LM). Units and locations will be specified on the task order.	2,500	LM	
B763	**Install Pre-Cast Concrete Curbs**	The Contractor shall provide and install pre-cast concrete curbs. The work includes excavation, lean concrete and placement of pre-cast concrete curbs. Typical detail of pre-cast concrete curb installation is shown on contract drawing PLATE # 17. All work shall be performed in accordance with Section 03 33 00-"Cast-in-Place Architectural Concrete". Unit of measurement shall be linear meters (LM). Units and locations will be specified on the task order.	100	LM	
B764	**Replace Frame and Cover on Existing Utilities**	The Contractor shall replace frame and cover on existing utilities. The work includes removal and disposal of old frame and cover, and providing and installation of new frame and cover to new grade. All work shall be performed in accordance with Section 05 50 00 -"Metal Miscellaneous and Fabrications". Unit of measurement shall be each (EA).	10	EA	
B765	**Install Guard Posts**	The Contractor shall install guard posts. The work includes site preparation, providing steel pipe, internal armoring and anchorage of post with concrete solidly and paint stripes. Typical guard post installation detail is shown on contract drawing PLATE # 16. All work shall be performed in accordance with Sections 05 50 00 -"Metal Miscellaneous and Fabrications" and 03 33 00 -"Cast-in-Place Architectural Concrete". Unit of measurement shall be each (EA).	25	EA	
B766	**Topographical Surveying**	The Contractor shall perform topographical surveying at the job site in the area indicated. The work includes establishing benchmark of elevations and stake out the new grade spots elevation. The survey shall be made with elevations data, mean sea level at Alicante for maintenance and repair works. Should the works are for new construction, the survey shall be made with elevations data, mean sea level at Alicante and U.T.M coordinates which will be provided by the Government. All survey data shall be produced and submitted on AUTOCAD software, latest version. The Contractor shall submit all survey data to the Contracting Officer for approval. Submit all CAD files for the final drawings on CD ROM disks. Scan all files submitted for viruses using the latest version of a commercial scanning program. Unit of measurement shall be square meters (SM), as computed by multiplying, in meters, area length, by width, (L x W).	25,300	SM	

ELIN	SHORT DESCRIPTION	FULL DESCRIPTION	EST QTY	UNIT OF ISSUE	UNIT PRICE (USD)
B767	**Site Plan Layout**	The Contractor shall perform and provide detailed drawings for exact sizes, exact numbers and detailed positioning of items and final as-built drawings that shall clearly depict the technical design of the facility. Drawings shall be in sufficient detail to show compliance with the contract requirements. All work shall be performed in accordance with Computer Aided Design and Drafting Policy. Drawings shall meet the applicable drawing standards specified in the Guide for Architect Engineer Firms available on the website for Atlantic Division, Naval Facilities Engineering Command. All drawings submitted for review shall be in D size, 24 inch x 36 inch, approximately 61 cm x 91 cm. Other drawing size may be used, if approved by the Contracting Officer. Use Naval Station Rota, Public Works Department Title Block. Unit of measurement shall be each (EA).	10	EA	
B768	**Emergency Repairs Asphalt Pot Holes**	The Contractor shall perform emergency repairs to asphalt potholes within the limits threshold of 1sm per hole. Emergency repairs shall be responded within 4 hours of the Government notification during Government regular working hours. If the emergency repair exceed the threshold the Contractor shall provide a Cost Proposal. The work includes removal of all loose debris, broken pieces of pavement and dust. Fill pothole with ready-to-use bituminous polymer modified cold asphalt and spread with rake or shovel and compact cold asphalt with manual roller or tamper to just over the level of the existing pavement. Thickness and application in layers of the bituminous cold asphalt shall be done as recommended by the manufacturer. Cold asphalt patching material shall comply with "Cold Asphalt Specifications"	10	EA	
B800	**Removal of Corrugated and Pre-Formed Metal Sheet Roofing.**	The Contractor shall perform the removal of existing corrugated and pre-formed metal sheet roofing. All rubbish, debris and loose material resulting from removal of corrugated and pre-formed metal sheet roofing shall be removed from the limits of the Naval Station daily. All work shall be performed in accordance with Sections 01 57 19.00 20 & 02 41 00 Unit of measurement shall be square meters (SM), as computed by multiplying, in meters, area length by width (L x W) , including all overlaps, overhangs, around roofing equipment/vents. Vertical walls and general obstructions 30.48 cm. (one foot) and under and all vertical walls over 30.48 cm (one foot) should be added to the square meter total. Dimensions and locations will be specified on the task order.	400	SM	
B801	**Removal of Corrugated and Pre-Formed Metal Roofing Ridge.**	The Contractor shall perform the removal of existing corrugated and pre-formed metal roofing ridge. All rubbish, debris and loose material resulting from removal of corrugated and pre-formed metal roofing ridge shall be removed from limits of the Naval Station daily. All work shall be performed in accordance with Sections 01 57 19.00 20 & 02 41 00 Unit of measurement shall be linear meters (LM) of removed roof ridge. Dimensions and locations will be specified on the task order.	60	LM	

ELIN	SHORT DESCRIPTION	FULL DESCRIPTION	EST QTY	UNIT OF ISSUE	UNIT PRICE (USD)
B802	**Removal of Corrugated Cement-Asbestos Sheet Roofing.**	The Contractor shall perform the removal of existing cement-asbestos sheet roofing. All rubbish, debris and loose material resulting from removal of cement-asbestos sheet roofing shall be removed from limits of the Naval Station daily. All work shall be performed in accordance with Sections 01 57 19.00 20, 02 41 00 & 02 82 14.00 10 Unit of measurement shall be square meters (SM), as computed by multiplying, in meters, area length by width (L x W) , including all overlaps, overhangs, around roofing equipment/vents. Vertical walls and general obstructions 30.48 cm. (one foot) and under and all vertical walls over 30.48 cm (one foot) should be added to the square meter total. Dimensions and locations will be specified on the task order.	1,000	SM	
B803	**Removal of Corrugated Plastic Sheet Roofing.**	The Contractor shall perform the removal of existing corrugated plastic sheet roofing. All rubbish, debris and loose material resulting from removal of corrugated plastic sheet roofing shall be removed from limits of the Naval Station daily. All work shall be performed in accordance with Sections 01 57 19.00 20 & 02 41 00 Unit of measurement shall be square meters (SM), as computed by multiplying, in meters, area length by width (L x W) , including all overlaps, overhangs, around roofing equipment/vents. Vertical walls and general obstructions 30.48 cm. (one foot) and under and all vertical walls over 30.48 cm (one foot) should be added to the square meter total. Dimensions and locations will be specified on the task order.	100	SM	
B804	**Removal of Gravel Surfaced Bituminous Built-Up Roofing.**	The Contractor shall perform the removal of existing gravel surfaced bituminous built-up roofing. Work includes removal of existing loose gravel. All debris and loose material resulting from removal of gravel surfaced bituminous built-up roofing shall be removed from limits of the Naval Station daily. All work shall be performed in accordance with Sections 01 57 19.00 20 & 02 41 00 Unit of measurement shall be square meters (SM), as computed by multiplying, in meters, area length by width (L x W) , including all overlaps, overhangs, around roofing equipment/vents. Vertical walls and general obstructions 30.48 cm. (one foot) and under and all vertical walls over 30.48 cm (one foot) should be added to the square meter total. Dimensions and locations will be specified on the task order.	250	SM	
B805	**Removal of Polymeric Asphalt Sheet Roofing.**	The Contractor shall perform the removal of existing polymeric asphalt sheet roofing. All debris and loose material resulting from removal of polymeric asphalt sheet roofing shall be removed from limits of the Naval Station daily. All work shall be performed in accordance with Sections 01 57 19.00 20 & 02 41 00 Unit of measurement shall be square meters (SM), as computed by multiplying, in meters, area length by width (L x W) , including all overlaps, overhangs, around roofing equipment/vents. Vertical walls and general obstructions 30.48 cm. (one foot) and under and all vertical walls over 30.48 cm (one foot) should be added to the square meter total. Dimensions and locations will be specified on the task order.	2,000	SM	

ELIN	SHORT DESCRIPTION	FULL DESCRIPTION	EST QTY	UNIT OF ISSUE	UNIT PRICE (USD)
B806	**Removal of Inverted Insulated Roofing.**	The Contractor shall perform the removal of existing inverted insulated roofing. Includes removal of existing loose gravel ballast, insulation and all polymeric asphalt sheet roofing membranes, where applicable. All debris and loose material resulting from removal of inverted insulated roofing shall be removed from limits of the Naval Station daily. All work shall be performed in accordance with Sections 01 57 19.00 20 & 02 41 00 Unit of measurement shall be square meters (SM), as computed by multiplying, in meters, area length by width (L x W) , including all overlaps, overhangs, around roofing equipment/vents. Vertical walls and general obstructions 30.48 cm. (one foot) and under and all vertical walls over 30.48 cm (one foot) should be added to the square meter total. Dimensions and locations will be specified on the task order.	600	SM	
B807	**Removal of Loose Gravel Ballast.**	The Contractor shall perform the removal of existing loose gravel ballast from gravel surfaced bituminous built-up and inverted insulated roofing. All debris and loose material resulting from removal of loose gravel ballast shall be removed from limits of the Naval Station daily. All work shall be performed in accordance with Sections 01 57 19.00 20 & 02 41 00 Unit of measurement shall be square meters (SM), as computed by multiplying, in meters, area length by width (L x W) , including all overlaps, overhangs, around roofing equipment/vents. Vertical walls and general obstructions 30.48 cm. (one foot) and under and all vertical walls over 30.48 cm (one foot) should be added to the square meter total. Dimensions and locations will be specified on the task order.	200	SM	
B808	**Removal of Curved Arabic Tile Roofing.**	The Contractor shall perform the removal of existing curved Arabic tile roofing. All debris and loose material resulting from the removal of the curved Arabic tile roofing shall be removed from limits of the Naval Station daily. All work shall be performed in accordance with Sections 01 57 19.00 20 & 02 41 00 Unit of measurement shall be square meters (SM), as computed by multiplying, in meters, area length by width (L x W) , including all overlaps, overhangs, around roofing equipment/vents. Vertical walls and general obstructions 30.48 cm. (one foot) and under and all vertical walls over 30.48 cm (one foot) should be added to the square meter total. Dimensions and locations will be specified on the task order.	200	SM	
B809	**Removal of Rain Gutters and Down Spouts.**	The Contractor shall perform the removal of existing roof gutters and down spouts. Work includes removal of all gutter and/or down spout hangers and fasteners. All debris and loose material resulting from removal of gutters and down spouts shall be removed from limits of the Naval Station daily. All work shall be performed in accordance with Sections 01 57 19.00 20 & 02 41 00 Unit of measurement shall be linear meters (LM) of removed roof gutters and/or down spouts. Dimensions and locations will be specified on the task order	400	LM	

ELIN	SHORT DESCRIPTION	FULL DESCRIPTION	EST QTY	UNIT OF ISSUE	UNIT PRICE (USD)
B810	**Removal of Polyurethane Foam Roof.**	The Contractor shall perform the removal of existing polyurethane foam roof. All debris and loose material resulting from the removal of existing polyurethane foam roof shall be removed from limits of the Naval Station daily. All work shall be performed in accordance with Sections 01 57 19.00 20 & 02 41 00 Unit of measurement shall be square meters (SM), as computed by multiplying, in meters, area length by width (L x W) , including all overlaps, overhangs, around roofing equipment/vents. Vertical walls and general obstructions 30.48 cm. (one foot) and under and all vertical walls over 30.48 cm (one foot) should be added to the square meter total. Dimensions and locations will be specified on the task order.	1,000	SM	
B811	**Installation of Corrugated Metal Sheet Roofing.**	The Contractor shall perform the installation of corrugated metal sheet roofing. The work includes surface preparation, supply, delivery and installation of corrugated metal sheet roof, all as necessary so as to provide for a complete and functional roofing system. Where applicable, installed corrugated metal sheet roofing shall match existing and adjacent roofing in shape, size and profile. Typical details are shown on contract drawing PLATES #'s 1, 3 & 11. All work shall be performed in accordance with Section 07 41 13 . Unit of measurement shall be square meters (SM), as computed by multiplying, in meters, area length by width (L x W) , including all overlaps, overhangs, around roofing equipment/vents. Vertical walls and general obstructions 30.48 cm. (one foot) and under and all vertical walls over 30.48 cm (one foot) should be added to the square meter total. Dimensions and locations will be specified on the task order.	1,000	SM	
B812	**Installation of Corrugated Sandwich Metal Sheet Roofing.**	The Contractor shall perform the installation of corrugated sandwich metal sheet roofing. The work includes surface preparation, supply, delivery and installation of corrugated sandwich metal sheet roof, all as necessary so as to provide for a complete and functional roofing system. Where applicable, installed corrugated sandwich metal sheet roofing shall match existing and adjacent roofing in shape, size and profile. All work shall be performed in accordance with Section 07 41 13. Unit of measurement shall be square meters (SM), as computed by multiplying, in meters, area length by width (L x W) , including all overlaps, overhangs, around roofing equipment/vents. Vertical walls and general obstructions 30.48 cm. (one foot) and under and all vertical walls over 30.48 cm (one foot) should be added to the square meter total. Dimensions and locations will be specified on the task order.	1,000	SM	
B813	**Installation of Corrugated Metal Sheet Roofing Ridge.**	The Contractor shall perform the installation of corrugated metal sheet roofing ridge. The work includes surface preparation, supply, task and installation of corrugated metal sheet roof ridge, all as necessary so as to provide for a complete and functional roofing system. Where applicable, installed corrugated metal sheet roofing ridge shall match existing and adjacent roofing ridge in shape, size and profile. Typical details are shown on contract drawing PLATES #'s 1, 3 & 11. All work shall be performed in accordance with Section 07 41 13. Unit of measurement shall be linear meters (LM) of installed corrugated metal sheet roofing ridge. Dimensions and locations will be specified on the task order.	30	LM	

ELIN	SHORT DESCRIPTION	FULL DESCRIPTION	EST QTY	UNIT OF ISSUE	UNIT PRICE (USD)
B814	**Installation of Pre-Formed Metal Sheet Roofing.**	The Contractor shall perform the installation of pre-formed metal sheet roofing. The work includes surface preparation, supply, delivery and installation of pre-formed metal sheet roof, all as necessary so as to provide for a complete and functional roofing system. Where applicable, installed pre-formed metal sheet roofing shall match existing and adjacent roofing in shape, size and profile. Typical details are shown on contract drawing PLATES #'s 1, 3 & 11. All work shall be performed in accordance with Section 07 41 13. Unit of measurement shall be square meters (SM), as computed by multiplying, in meters, area length by width (L x W) , including all overlaps, overhangs, around roofing equipment/vents. Vertical walls and general obstructions 30.48 cm. (one foot) and under and all vertical walls over 30.48 cm (one foot) should be added to the square meter total. Dimensions and locations will be specified on the task order.	200	SM	
B815	**Installation of Pre-Formed Metal Sheet Roofing Ridge.**	The Contractor shall perform the installation of pre-formed metal sheet roofing ridge. The work includes surface preparation, supply, task and installation of pre-formed metal sheet roof ridge, all as necessary so as to provide for a complete and functional roofing system. Where applicable, installed pre-formed metal sheet roofing ridge shall match existing and adjacent roofing ridge in shape, size and profile. Typical details are shown on contract drawing PLATES #'s 1, 3 & 11. All work shall be performed in accordance with Section 07 41 13. Unit of measurement shall be linear meters (LM) of installed pre-formed metal sheet roofing ridge. Dimensions and locations will be specified on the task order.	30	LM	
B816	**Installation of Pre-Formed Sandwich Metal Sheet Roofing.**	The Contractor shall perform the installation of pre-formed sandwich metal sheet roofing. The work includes surface preparation, supply, delivery and installation of pre-formed sandwich metal sheet roof, all as necessary so as to provide for a complete and functional roofing system. Where applicable, installed pre-formed sandwich metal sheet roofing shall match existing and adjacent roofing in shape, size and profile. All work shall be performed in accordance with Section 07 41 13. Unit of measurement shall be square meters (SM), as computed by multiplying, in meters, area length by width (L x W) , including all overlaps, overhangs, around roofing equipment/vents. Vertical walls and general obstructions 30.48 cm. (one foot) and under and all vertical walls over 30.48 cm (one foot) should be added to the square meter total. Dimensions and locations will be specified on the task order.	200	SM	
B817	**Re-Sealing of Pre-Formed and Corrugated Metal Sheet Roofing Joints and Overlaps.**	The Contractor shall perform the re-sealing of pre-formed and corrugated metal sheet roofing joints and overlaps with a silicone-rubber base mastic caulking. Existing joint and/or overlap caulking shall be completely removed and the surface area to receive new caulking shall be thoroughly cleaned and prepared. Typical details are shown on contract drawing PLATES #'s 1, 3 & 11. All work shall be performed in accordance with Sections 07 41 13 & 07 92 00. Unit of measurement shall be linear meters (LM) of re-sealed pre-formed and/or corrugated metal sheet roofing joints and/or overlaps. Dimensions and locations will be specified on the task order.	200	LM	

ELIN	SHORT DESCRIPTION	FULL DESCRIPTION	EST QTY	UNIT OF ISSUE	UNIT PRICE (USD)
B818	**Re-Sealing of Pre-Formed and Corrugated Metal Sheet Roofing Fasteners.**	The Contractor shall perform the re-sealing of pre-formed and corrugated metal sheet roofing fasteners with a silicone-rubber base mastic caulking. Existing fasteners caulking shall be completely removed and the surface area to receive new caulking shall be thoroughly cleaned and prepared. Typical details are shown on contract drawing PLATES #'s 1, 3 & 11. All work shall be performed in accordance with Sections 07 41 13 & 07 92 00. Unit of measurement shall be each (EA) re-sealed pre-formed and/or corrugated metal sheet roofing fastener. Quantities and locations will be specified on the task order.	200	EA	
B819	**Waterproofing of union between Pre-Formed and Corrugated Metal Sheet Roofing and Vertical walls.**	The Contractor shall perform the waterproofing of the union between pre-formed and corrugated metal sheet roofing with vertical surfaces by means of Styrene Butadiene Styrene (SBS) modified membrane. Where applicable, existing aluminum finished polymeric asphalt sheets or Styrene Butadiene Styrene (SBS) modified membrane shall be removed and the surface area to receive new Butadiene Styrene (SBS) modified membrane shall be thoroughly cleaned and prepared. Typical details are shown on contract drawing PLATES #'s 1, 3 & 11. All work shall be performed in accordance with Section 07 52 00 and 07 41 13. Unit of measurement shall be linear meters (LM) of installed polymeric asphalt sheet roofing at vertical junctions. Dimensions and locations will be specified on the task order.	50	LM	
B820	**Installation of Corrugated Plastic Sheet Roofing.**	The Contractor shall perform the installation of corrugated plastic sheet roofing. The work , including surface preparation, supply, delivery and installation of corrugated plastic sheet roof, all as necessary so as to provide for a complete and functional roofing system. Where applicable, installed corrugated plastic sheet roofing shall match existing and adjacent roofing in shape, size, color and profile. Typical details are shown on contract drawing PLATE # 1, 3 & 11. All work shall be performed in accordance with Section 07 54 19. Unit of measurement shall be square meters (SM), as computed by multiplying, in meters, area length by width (L x W) , including all overlaps, overhangs, around roofing equipment/vents. Vertical walls and general obstructions 30.48 cm. (one foot) and under and all vertical walls over 30.48 cm (one foot) should be added to the square meter total. Dimensions and locations will be specified on the task order.	100	SM	
B821	**Installation of Corrugated Plastic Sheet Roofing Ridges.**	The Contractor shall perform the installation of corrugated plastic sheet roofing ridges. The work includes surface preparation, supply and installation of corrugated plastic sheet roofing ridges, all as necessary so as to provide for a complete and functional roofing system. Where applicable, installed corrugated plastic sheet roofing ridges shall match existing and adjacent roofing ridges in shape, size, color and profile. Typical details are shown on contract drawing PLATES #'s 1, 3 & 11. All work shall be performed in accordance with Section 07 54 19. Unit of measurement shall be linear meters (LM) installed corrugated plastic sheet roofing ridges. Dimensions and locations will be specified on the task order.	100	LM	

ELIN	SHORT DESCRIPTION	FULL DESCRIPTION	EST QTY	UNIT OF ISSUE	UNIT PRICE (USD)
B822	**Re-Sealing of Corrugated Plastic Sheet Roofing Joints and Overlaps.**	The Contractor shall perform the re-sealing of corrugated plastic sheet roofing joints and overlaps with a silicone-rubber base mastic caulking. Existing joint and/or overlap caulking shall be completely removed and the surface area to receive new caulking shall be thoroughly cleaned and prepared. Typical details are shown on contract drawing PLATES #'s 1, 3 & 11. All work shall be performed in accordance with Sections 07 54 19 & 07 92 00. Unit of measurement shall be linear meters (LM) of re-sealed corrugated plastic sheet roofing joints and/or overlaps. Dimensions and locations will be specified on the task order.	200	LM	
B823	**Re-Sealing of Corrugated Plastic Sheet Roofing Fasteners.**	The Contractor shall perform the re-sealing of corrugated plastic sheet roofing fasteners with a silicone-rubber base mastic caulking. Existing fasteners caulking shall be completely removed and the surface area to receive new caulking shall be thoroughly cleaned and prepared. Typical details are shown on contract drawing PLATES #'s 1, 3 & 11. All work shall be performed in accordance with Sections 07 54 19 & 07 92 00. Unit of measurement shall be each (EA) re-sealed corrugated plastic sheet roofing fastener. Quantities and locations will be specified on the task order.	200	EA	
B824	**Waterproofing of union between Corrugated plastic Sheet Roofing and Vertical walls.**	The Contractor shall perform the waterproofing of the union between corrugated plastic sheet roofing with vertical surfaces by means of Styrene Butadiene Styrene (SBS) modified membrane. Where applicable, existing aluminum finished polymeric asphalt sheets or Styrene Butadiene Styrene (SBS) modified membrane shall be removed and the surface area to receive new Butadiene Styrene (SBS) modified membrane shall be thoroughly cleaned and prepared. Typical details are shown on contract drawing PLATES #'s 1, 3 & 11. All work shall be performed in accordance with Sections 07 52 00 and 07 54 19. Unit of measurement shall be linear meters (LM) of installed polymeric asphalt sheet roofing at vertical junctions. Dimensions and locations will be specified on the task order.	100	LM	
B825	**Installation of Styrene Butadiene Styrene (SBS) Modified Bituminous membrene roofing on Existing "Sevillana" Tile Roofs.**	The Contractor shall perform the installation of Styrene Butadiene Styrene (SBS) Modified Bituminous membrane roofing on existing "Sevillana" roofing. The work includes surface preparation, supply, delivery and installation of Styrene Butadiene Styrene (SBS) Modified Bituminous membrane roofing on existing "Sevillana" tile roofing, all as necessary so as to provide for a complete and functional roofing system. Installation of crickets at junction of deck and vertical surfaces shall be ordered separately under ELIN A807. Typical details are shown on contract drawing PLATES #'s 4, 8, 9, 12, 14, 15 & 16. All work shall be performed in accordance with Section 07 52 00. Unit of measurement shall be square meters (SM), as computed by multiplying, in meters, area length by width (L x W) , including all overlaps, overhangs, around roofing equipment/vents. Dimensions and locations will be specified on the task order.	200	SM	

ELIN	SHORT DESCRIPTION	FULL DESCRIPTION	EST QTY	UNIT OF ISSUE	UNIT PRICE (USD)
B826	**Installation of Styrene Butadiene Styrene (SBS) Modified Bituminous membrane Roofing on Concrete Roof Decks.**	The Contractor shall perform the installation of styrene butadiene styrene (SBS) modified bituminous membrane roofing on concrete roof decks. The work includes surface preparation, supply, delivery and installation of Styrene Butadiene Sstyrene (SBS) modified bituminous membrane roofing on concrete roof decks, all as necessary so as to provide for a complete and functional roofing system. Installation of crickets at junction of deck and vertical surfaces shall be ordered separately under ELIN A807. Typical details are shown on contract drawing PLATES #'s 4, 8, 9, 12, 14, 15 & 16. All work shall be performed in accordance with Section 07 52 00. Unit of measurement shall be square meters (SM), as computed by multiplying, in meters, area length by width (L x W) , including all overlaps, overhangs, around roofing equipment/vents. Dimensions and locations will be specified on the task order.	10,000	SM	
B827	**Installation of Insulated Concrete Roofing Systems.**	The Contractor shall perform the installation of insulated concrete roofing systems. Work includes installation of insulation, sloped cellular concrete and Styrene Butadiene Styrene (SBS) modified bituminous membrane plies, all as necessary so as to provide for a complete and functional roofing system. Averaged thickness of cellular concrete shall not exceed 10 cm. Typical details are shown on contract drawing PLATES #'s 4, 8, 9, 12, 13, 14, 15 & 16. All work shall be performed in accordance with Sections 03 52 00 and 07 52 00. Unit of measurement shall be square meters (SM), as computed by multiplying, in meters, area length by width (L x W) , including all overlaps, overhangs, around roofing equipment/vents. Vertical walls and general obstructions 30.48 cm. (one foot) and under and all vertical walls over 30.48 cm (one foot) should be added to the square meter total. Dimensions and locations will be specified on the task order.	500	SM	
B828	**Installation of Curved Arabic Tile Roofing.**	The Contractor shall perform the installation of curved Arabic tile roofing. The work includes surface preparation, supply, delivery and installation of curved Arabic tile roofing, all as necessary so as to provide for a complete and functional roofing system. Where applicable, installed curved Arabic tile roofing shall match existing and adjacent roofing in shape, size, color and profile. Typical details are shown on contract drawing PLATES #'s 5, 6 & 7. All work shall be performed in accordance with Section 07 32 13. Unit of measurement shall be square meters (SM), as computed by multiplying, in meters, area length by width (L x W) , including all overlaps, overhangs, around roofing equipment/vents. Vertical walls and general obstructions 30.48 cm. (one foot) and under and all vertical walls over 30.48 cm (one foot) should be added to the square meter total. Dimensions and locations will be specified on the task order.	200	SM	

ELIN	SHORT DESCRIPTION	FULL DESCRIPTION	EST QTY	UNIT OF ISSUE	UNIT PRICE (USD)
B829	**Installation of Curved Arabic Tile Roofing Ridges**	The Contractor shall perform the installation of curved Arabic tile roofing ridges. The work includes surface preparation, supply, task and installation of curved Arabic tile roofing ridges, all as necessary so as to provide for a complete and functional roofing system. Where applicable, installed curved Arabic tile roofing ridges shall match existing and adjacent roofing ridge in shape, size, color and profile. Typical details are shown on contract drawing PLATES #'s 5, 6 & 7. All work shall be performed in accordance with Section 07 32 13. Unit of measurement shall be linear meters (LM) installed curved Arabic tile roofing ridges. Dimensions and locations will be specified on the task order.	50	LM	
B830	**Rubber Paint over exiting Curved Arabic Tile Roofing.**	The Contractor shall perform the painting over the existing curved Arabic tile roofing. The work includes surface preparation, supply, delivery and clear rubber painting of curved Arabic tile roofing, all as necessary so as to provide for a complete and functional roofing system. All work shall be performed in accordance with Section 09 90 00. Unit of measurement shall be square meters (SM), as computed by multiplying, in meters, area length by width (L x W) , including all overlaps, overhangs, around roofing equipment/vents. Vertical walls and general obstructions 30.48 cm. (one foot) and under and all vertical walls over 30.48 cm (one foot) should be added to the square meter total. Dimensions and locations will be specified on the task order.	7,500	SM	
B831	**Installation of Sheet Metal Flashing on Aluminum Finished Polymeric (or SBS) Asphalt Sheet Roofing.**	The Contractor shall perform the installation of sheet metal flashing on aluminum finished polymeric (or SBS) asphalt sheet roofing. Typical details are shown on contract drawing PLATE # 4. All work shall be performed in accordance with Section 07 60 00. Unit of measurement shall be square meters (SM), as computed by multiplying, in meters, area length by width (L x W) , including all overlaps, overhangs, around roofing equipment/vents. Vertical walls and general obstructions 30.48 cm. (one foot) and under and all vertical walls over 30.48 cm (one foot) should be added to the square meter total. Dimensions and locations will be specified on the task order.	50	SM	
B832	**Installation of Sheet Metal Flashing on Parapet Copings.**	The Contractor shall perform the installation of sheet metal flashing on parapet copings. Typical details are shown on contract drawing PLATE # 8. All work shall be performed in accordance with Section 07 60 00. Unit of measurement shall be square meters (SM), as computed by multiplying, in meters, area length by width (L x W) , including all overlaps, overhangs, around roofing equipment/vents. Vertical walls and general obstructions 30.48 cm. (one foot) and under and all vertical walls over 30.48 cm (one foot) should be added to the square meter total. Dimensions and locations will be specified on the task order.	100	SM	
B833	**Installation of Sheet Metal Expansion Joint Flashings.**	The Contractor shall perform the installation of sheet metal expansion joint Flashings. Typical details are shown on contract drawing PLATE # 9. All work shall be performed in accordance with Section 07 60 00. Unit of measurement shall be linear meters (LM) of installed sheet metal expansion joint Flashings. Dimensions and locations will be specified on the task order.	100	LM	

ELIN	SHORT DESCRIPTION	FULL DESCRIPTION	EST QTY	UNIT OF ISSUE	UNIT PRICE (USD)
B834	**Installation of Rain Gutters.**	The Contractor shall perform the installation of rain gutters. Work shall include all hangers and fasteners necessary for a complete and functional installation. Typical details are shown on contract drawing PLATE # 11. All work shall be performed in accordance with Section 07 60 00. Unit of measurement shall be linear meters (LM) of installed rain gutters. Dimensions and locations will be specified on the delivery order.	500	LM	
B835	**Installation of Rain Gutters and/or Scupper Down Spouts.**	The Contractor shall perform the installation of rain gutters and/or scupper down spouts. Work shall include all hangers and fasteners necessary for a complete and functional installation. Typical details are shown on contract drawing PLATE # 10. All work shall be performed in accordance with Section 07 60 00. Unit of measurement shall be linear meters (LM) of installed rain gutters and/or scupper down spouts. Dimensions and locations will be specified on the task order.	100	LM	
B836	**Installation of Down Spout Conductor Heads.**	The Contractor shall perform the installation of down spout conductor heads. Typical details are shown on contract drawing PLATE # 10. All work shall be performed in accordance with Section 07 60 00. Unit of measurement shall be each (EA) installed down spout heads. Quantities and locations will be specified on the task order.	25	EA	
B837	**Application of Sprayed Polyurethane Foam (PUF) Roof Coating.**	The Contractor shall perform the application of sprayed polyurethane (PUF) roof coating on existing pre-formed and/or corrugated metal sheet, asbestos-cement, and curved Arabic red tile roofs. Work includes application of sprayed polyurethane and application of elastomeric roof coating. Typical details are shown on contract drawing PLATE # 2. All work shall be performed in accordance with Section 07 57 13. Unit of measurement shall be square meters (SM), as computed by multiplying, in meters, area length by width (L x W) , including all overlaps, overhangs, around roofing equipment/vents. Vertical walls and general obstructions 30.48 cms. (one foot) and under and all vertical walls over 30.48 cms. (one foot) should be added to the square meter total. Dimensions and locations will be specified on the task order.	1,200	SM	
B838	**Re-application of Elastomeric Roof Coating Over Polyurethane Foam (PUF).**	The Contractor shall perform the re-application of elastomeric roof coating over existing polyurethane foam (PUF) roof coating. Work includes removal of insulation which become damaged, overexposed to weather, or contaminated such that they cannot be cleaned and repaired to the satisfaction of the coating applicator, and provide new insulation and re-application of elastomeric roof coating. Typical details are shown on contract drawing PLATE # 2. All work shall be performed in accordance with Section 07 57 13. Unit of measurement shall be square meters (SM), as computed by multiplying, in meters, area length by width (L x W) , including all overlaps, overhangs, around roofing equipment/vents. Vertical walls and general obstructions 30.48 cms. (one foot) and under and all vertical walls over 30.48 cms. (one foot) should be added to the square meter total. Dimensions and locations will be specified on the task order.	8,000	SM	

ELIN	SHORT DESCRIPTION	FULL DESCRIPTION	EST QTY	UNIT OF ISSUE	UNIT PRICE (USD)
B839	**Re-paint Existing Polyurethane Foam.**	The Contractor shall perform the re-application of elastomeric roof coating over existing polyurethane foam coating. Work includes application of elastomeric roof coating over polyurethane foam. Typical details are shown on contract drawing PLATE # 2. All work shall be performed in accordance with Section 07 57 13. Unit of measurement shall be square meters (SM), as computed by multiplying, in meters, area length by width (L x W) , including all overlaps, overhangs, around roofing equipment/vents. Vertical walls and general obstructions 30.48 cm. (one foot) and under and all vertical walls over 30.48 cm (one foot) should be added to the square meter total. Dimensions and locations will be specified on the task order.	8,000	SM	
B840	**Installation of Inverted Insulated Roofing Systems.**	The Contractor shall perform the installation of inverted insulated roofing systems. Work includes installation of polymeric asphalt sheet roofing plies, polystyrene insulation and loose aggregate ballast, all as necessary so as to provide for a complete and functional roofing system. Typical details are shown on contract drawing PLATE # 13. All work shall be performed in accordance with Section 07 55 00. Unit of measurement shall be square meters (SM), as computed by multiplying, in meters, area length by width (L x W) , including all overlaps, overhangs, around roofing equipment/vents. Vertical walls and general obstructions 30.48 cm. (one foot) and under and all vertical walls over 30.48 cm (one foot) should be added to the square meter total. Dimensions and locations will be specified on the task order.	600	SM	
B841	**Installation of Crickets.**	The Contractor shall perform the installation of crickets at junctions of roof deck and vertical surfaces. All work shall be performed in accordance with Sections 03 52 00, 07 55 00 & 07 52 00, as applicable. Unit of measurement shall be linear meters (LM) of installed cricket. Dimensions and locations will be specified on the task order.	100	LM	
B842	**Installation of Expansion Joints.**	The Contractor shall perform the installation of neoprene expansion joints at junctions of roof decks and vertical surfaces. Typical details are shown on contract drawing PLATE # 9. All work shall be performed in accordance with Section 07 60 00. Unit of measurement shall be linear meters (LM) of installed expansion joints. Dimensions and locations will be specified on the task order.	200	LM	
B843	**Re-sealing of Expansion Joints.**	The Contractor shall perform the re-sealing of expansion joints with a silicone-rubber base mastic caulking. Existing joint caulking shall be completely removed and the surface area to receive new caulking shall be thoroughly cleaned and prepared. Typical details are shown on contract drawing PLATE # 9. All work shall be performed in accordance with Sections 07 60 00 & 07 92 00. Unit of measurement shall be linear meters (LM) of re-sealed expansion joint. Dimensions and locations will be specified on the task order.	320	LM	

ELIN	SHORT DESCRIPTION	FULL DESCRIPTION	EST QTY	UNIT OF ISSUE	UNIT PRICE (USD)
B844	**Forming of Slopes With Cellular Concrete.**	The Contractor shall perform the forming of slopes on existing concrete roof decks using cellular concrete. Averaged thickness of cellular concrete shall not exceed 10 cm. . Typical details are shown on contract drawing PLATES #'s 8, 9, 12, 13, 14, 15 & 16. All work shall be performed in accordance with Sections 07 55 00 & 07 52 00. Unit of measurement shall be square meters (SM), as computed by multiplying, in meters, area length by width (L x W) , including all overlaps, overhangs, around roofing equipment/vents. Vertical walls and general obstructions 30.48 cm. (one foot) and under and all vertical walls over 30.48 cm (one foot) should be added to the square meter total. Dimensions and locations will be specified on the task order.	1,000	SM	
B845	**Installation of Roof Mounted Duct and Equipment Supports.**	The Contractor shall perform the installation of roof mounted duct and equipment supports. Typical details are shown on contract drawing PLATE # 15. All work shall be performed in accordance with Section 07 60 00. Unit of measurement shall be each (EA) installed roof mounted duct and/or equipment supports. Quantities and locations will be specified on the task order.	10	EA	
B846	**Replacement of Drain Sumps and Strainers.**	The Contractor shall perform the replacement of existing drain sumps and strainers. Work , including demolition of existing concrete roof deck, removal of existing drain sump and strainer, installation of new roof drain sumps and strainers and patching of roof deck. Typical details are shown on contract drawing PLATE # 16. All work shall be performed in accordance with Section 07 60 00. Unit of measurement shall be each (EA) replaced roof drain sump and strainer. Quantities and locations will be specified on the task order.	10	EA	
B847	**Replacement of Pre-Cast Concrete Parapet Copings.**	The Contractor shall perform the replacement of pre-cast concrete parapet copings. Work includes demolition and removal of existing pre-cast concrete parapet roof copings, installation of new pre-cast concrete parapet copings, patching of parapet walls and repainting to match adjacent surfaces. Typical details are shown on contract drawing PLATES #'s 8 & 13. All work shall be performed in accordance with Section 03 31 01.00 10.Unit of measurement shall be linear meters (LM) of replaced pre-cast concrete parapet copings. Dimensions and locations will be specified on the delivery order. Unit of measurement shall be linear meters (LM) of replaced pre-cast concrete parapet copings. Dimensions and locations will be specified on the task order.	50	LM	
B848	**Installation of Pre-Cast Concrete Down Spout Splash Blocks.**	The Contractor shall perform the installation of pre-cast concrete down spout splash blocks. Typical details are shown on contract drawing PLATE # 10 . All work shall be performed in accordance with Section 03 31 01.00 10. Unit of measurement shall be each (EA) installed pre-cast concrete splash block. Quantities and locations will be specified on the task order.	10	EA	
B849	**Installation of Scupper Drains.**	The Contractor shall perform the installation of scupper drains in existing roof parapet walls. Typical details are shown on contract drawing PLATE # 16. All work shall be performed in accordance with Section 07 60 00. Unit of measurement shall be each (EA) installed scupper drain. Quantities and locations will be specified on the task order.	10	EA	

ELIN	SHORT DESCRIPTION	FULL DESCRIPTION	EST QTY	UNIT OF ISSUE	UNIT PRICE (USD)
B850	**Rubber Paint over Existing Roofing.**	The Contractor shall perform the application of rubber paint coating on existing pre-formed and/or corrugated metal sheet, asbestos-cement, concrete, and Ceramic Tiles roofs. Work includes application of rubber paint coating over existing roofing. All work shall be performed in accordance with Section 09 90 00. Unit of measurement shall be square meters (SM), as computed by multiplying, in meters, area length by width (L x W) , including all overlaps, overhangs, around roofing equipment/vents. Vertical walls and general obstructions 30.48 cm. (one foot) and under and all vertical walls over 30.48 cm (one foot) should be added to the square meter total. Dimensions and locations will be specified on the task order.	1,500	SM	
B851	**Emergency repairs for roofing leaks.**	The Contractor shall perform emergency repairs on roofing leaks within the limits threshold of 16 hours of labor and $3,000 of direct material cost. Emergency repairs shall be responded within 4 hours of the Government notification during Government regular working hours. If the emergency repair exceed the threshold contractor shall provide a Cost Proposal. Dimensions and locations will be specified on the task order. Contractor shall protect all the building interior area affected by the roof leak to prevent any damage.	10	EA	
B900	**Exterior Paint extending from the ground level up to 3.75 LM above ground level.**	The Contractor shall prepare the surface and paint in accordance with SECTION 09 90 00 Paints and Coatings, this ELIN includes all the exterior surfaces up to 3.75LM above ground level and comprise all the surfaces included in the paint tables of SECTION 09 90 00. Locations and paint colors will be specified on each the task order or shall match to the existing color. The measurement method is provided in J-1503040-04	10,000	SM	
B901	**Exterior Paint extending from 3.75LM above ground level up to 30LM above ground level.**	The Contractor shall prepare the surface and paint in accordance with SECTION 09 90 00 Paints and Coatings, this ELIN includes all the exterior surfaces from 3.75LM above ground level up to 30LM above ground level, and comprise all the surfaces included in the paint tables of SECTION 09 90 00. Locations and paint colors will be specified on each the task order or shall match to the existing color. The measurement method is provided in J-1503040-04.	20,000	SM	
B902	**Interior Paint extending from the floor level up to 3.75LM above ground level.**	The Contractor shall prepare the surface and paint in accordance with SECTION 09 90 00 Paints and Coatings, this ELIN includes all the interior surfaces up to 3.75LM above floor level and comprise all the surfaces included in the paint tables of SECTION 09 90 00. Locations and paint colors will be specified on each the task order or shall match to the existing color. The measurement method is provided in J-1503040-04.	15,000	SM	
B903	**Interior Paint extending from 3.75LM above floor level up to 30LM above floor level.**	The Contractor shall prepare the surface and paint in accordance with SECTION 09 90 00 Paints and Coatings, this ELIN includes all the interior surfaces up to 3.75LM above floor level and comprise all the surfaces included in the paint tables of SECTION 09 90 00. Locations and paint colors will be specified on each the task order or shall match to the existing color. The measurement method is provided in J-1503040-04.	30,000	SM	
B1000	**Unit Priced Un-Skilled Labor Work (negotiated)**	Includes all labor and supervision required to perform miscellaneous un-skilled work. Unskilled labor includes, but is not limited to the following types of trades: Laborer, Small Equipment Operator, Helper, etc. Dimensions and locations will be specified on the task order.	600	HR	

ELIN	SHORT DESCRIPTION	FULL DESCRIPTION	EST QTY	UNIT OF ISSUE	UNIT PRICE (USD)
B1001	**Miscellaneous Costs (negotiated)**	Includes all materials, equipment, and subcontracted effort required to perform miscellaneous work. Costs for materials, equipment, and subcontractor effort, not covered under any UPT, shall be negotiated as required for each task order. Units, dimensions, and locations will be specified on the task order.	1	LOT	

EXHIBIT LINE ITEM NUMBERS					
SOLICITATION NO. N33191-15-R-XXXX					
PROVIDE UNIT PRICES FOR INDEFINITE DELIVERY INDEFINITE QUANTITY WORK					
ELINs C700 through C1001					
Second Period - Indefinite Quantity Work					
ELIN	**SHORT DESCRIPTION**	**FULL DESCRIPTION**	**EST QTY**	**UNIT OF ISSUE**	**UNIT PRICE (USD)**
C700	**Demolition and Removal of Bituminous Asphalt Pavement**	The Contractor shall perform the demolition and removal of existing bituminous asphalt pavement. The asphalt pavement shall be saw cut, to a minimum depth of 10 cm, extending out 30.5 cm beyond the edge of the aggregate base to be removed. All saw cuts shall be made with vertical straight faces making one pair of faces at right angles to traffic flow. Typical details are shown on contract drawing PLATE # 10. Broken pavement, debris and resulting loose material shall be removed from limits of the station daily. All work shall be performed in accordance with Sections 01 57 19.00 20 - "Temporary Environmental Controls" & 02 41 00 - "Demolition". Unit of measurement shall be square meters (SM), as computed by multiplying, in meters, area length by width (L x W). Dimensions and locations will be specified on the task order.	7,500	SM	
C701	**Demolition and Removal of Aggregate Base**	The Contractor shall perform the demolition and removal of existing aggregate to a minimum depth of 20 cm. Typical details will be provided with each task order. Debris and resulting loose material shall be removed from limits of the station daily. All work shall be performed in accordance with Sections 01 57 19.00 20 - "Temporary Environmental Controls" & 02 41 00 - "Demolition". Unit of measurement shall be cubic meters (CM), as computed by multiplying, in meters, area length by width by depth (L x W x D). Dimensions and locations will be specified on the task order.	1,875	CM	
C702	**Removal and Reinstallation or Disposal of Concrete Wheel Stops**	The Contractor shall perform the removal and reinstallation or disposal of existing concrete wheel stops. All work shall be performed in accordance with Sections 01 57 19.00 20 - "Temporary Environmental Controls" & 02 41 00 - "Demolition". Unit of measurement shall be Each (EA). Units and locations will be specified on the task order.	100	EA	
C703	**Demolition and Removal of Concrete Curbs**	The Contractor shall perform the demolition and removal of existing pre-cast concrete curbs. All work shall be performed in accordance with Section 01 57 19.00 20 - "Temporary Environmental Controls" & 02 41 00 - "Demolition". Unit of measurement shall be linear meters (LM). Units and locations will be specified on the task order.	125	LM	
C704	**Demolition and Removal of Storm Drainage Headwalls**	The Contractor shall perform the demolition and removal of existing storm drainage headwalls. Broken concrete, debris and resulting loose material shall be removed from limits of the station daily. All work shall be performed in accordance with Section 01 57 19.00 20 - "Temporary Environmental Controls" & 02 41 00 - "Demolition". Unit of measurement shall be Each (EA). Units and locations will be specified on the task order.	4	EA	
C705	**Demolition and Removal of Concrete Pipe Culverts**	The Contractor shall perform the removal of existing pipe culverts. Old culvert pipe, debris and resulting loose material shall be removed from limits of the station daily. All work shall be performed in accordance with Section 01 57 19.00 20 - "Temporary Environmental Controls" & 02 41 00 - "Demolition". Unit of measurement shall be linear meters (LM). Units and locations will be specified on the task order.	100	LM	

ELIN	SHORT DESCRIPTION	FULL DESCRIPTION	EST QTY	UNIT OF ISSUE	UNIT PRICE (USD)
C706	**Demolition and Removal of Concrete Sidewalks**	The Contractor shall perform demolition and removal of existing concrete sidewalks, all as indicated on the contract task order and site plans (as applicable). Where required and indicated, concrete shall be saw cut. Typical details will be provided with each task order. Broken concrete, debris and resulting loose material shall be removed from limits of the station daily. All work shall be performed in accordance with Sections 01 57 19.00 20-“Temporary Environmental Controls” & 02 41 00-“Demolition”. Unit of measurement shall be square meters (SM), as computed by multiplying, in meters, area length by width (L x W) considering an average depth of 0.1m . Dimensions and locations will be specified on the task order.	1,500	SM	
C707	**Cold Milling of Bituminous Asphalt Pavements**	The Contractor shall perform cold milling 6 cm depth on existing bituminous asphalt pavement. All debris and resulting loose milled material shall be removed from limits of the station daily. All work shall be performed in accordance with Sections 32 0116 17 - "Cold Milling". This ELIN# may be ordered in conjunction with work ordered under ELIN's #A735. Unit of measurement shall be square meters (SM), as computed by multiplying, in meters, area length by width (L x W). Dimensions and locations will be specified on the task order.	6,800	SM	
C708	**Earthwork for Construction of Bituminous Asphalt Pavements**	The Contractor shall perform the general earthwork required for the construction of bituminous asphalt paved roads and parking lots. The work includes performing site preparation, excavation, compaction, removal of excess material and grading, all as necessary to construct bituminous asphalt paved roads, and parking lots at the finished grade and elevations indicated. Typical details are shown on contract drawing PLATE #'s 7 & 8. All work shall be performed in accordance with Section 31 23 00.00 20 - “Excavation and Fill”. Unit of measurement shall be cubic meters (CM), as computed by multiplying, in meters, area length by width by depth (L x W x D). Dimensions, slopes and finished grade will be specified on the task order.	1,700	CM	
C709	**Earthwork for Storm Sewer Pipe (4 meter max. depth)**	The Contractor shall perform the general excavation required for the installation storm drainage pipe. The work includes performing site preparation, excavation, installation of granular pipe bedding, backfill, compacting, removal of excess material and grading, all as necessary to install storm sewer pipe and other related appurtenances at the finished grade and elevations indicated. Maximum depth shall be 4 meter. Typical details are shown on contract drawing PLATE # 1. All work shall be performed in accordance with Section 31 23 00.00 20 - “Excavation and Fill”. Unit of measurement shall be cubic meters (CM), as computed by multiplying, in meters, length by width by depth (L x W x D). Dimensions, slopes and finished grade will be specified on the task order.	150	CM	

ELIN	SHORT DESCRIPTION	FULL DESCRIPTION	EST QTY	UNIT OF ISSUE	UNIT PRICE (USD)
C710	**Earthwork for Storm Sewer Manholes (4 meter max. depth)**	The Contractor shall perform the general excavation required for the construction of storm sewer manholes. The work includes performing site preparation, excavation, backfill, compacting, removal of excess material and grading, all as necessary to install storm sewer manholes at the finished grade and elevations indicated. Maximum depth shall be 4 meter. Typical details are shown on contract drawing PLATE # 2. All work shall be performed in accordance with Section 31 23 00.00 20 - "Excavation and Fill". Unit of measurement shall be cubic meters (CM), as computed by multiplying, in meters, length by width by depth (L x W x D). Dimensions, slopes and finished grade will be specified on the task order.	60	CM	
C711	**Earthwork For Storm Drainage Channels/Reshaping (4 meter max. depth)**	The Contractor shall perform the general excavation required for the construction of storm drainage channels. The work includes performing site preparation, excavation for new channel and reshaping for old channel, backfill, compaction, installation of organic mat, removal of excess material and grading, all as necessary to construct storm drainage channels at the finished grade and elevations indicated. Typical details are shown on contract drawing PLATE # 3. All work shall be performed in accordance with Section 31 23 00.00 20 - "Excavation and Fill". Unit of measurement shall be cubic meters (CM), as computed by multiplying, in meters, length by width by depth (L x W x D). Dimensions, slopes and finished grade will be specified on the task order.	150	CM	
C712	**Earthwork for Construction of Sidewalks**	The Contractor shall perform the general earthwork required for the construction of concrete sidewalks. The work includes performing site preparation, excavation, compaction, and removal of excess material and grading, all as necessary to construct concrete sidewalks at the finished grade and elevations indicated. Typical details are shown on contract drawing PLATE #'18. All work shall be performed in accordance with Section 31 00 00 -"Earthwork". Unit of measurement shall be square meters (SM), as computed by multiplying, in meters, area length by width (L x W) considering an average depth of 0.1m . Dimensions and locations will be specified on the task order.	1,500	SM	
C713	**Concrete Storm Sewer Pipe (Ø20 cm)**	The Contractor shall perform the installation of 20 cm. diameter concrete storm drainage pipe. The work includes providing granular pipe bedding material, concrete storm drainage pipe, fittings and joints at the finished grade and elevations indicated. Typical details are shown on contract drawing PLATE # 1. All work shall be performed in accordance with Sections 31 23 00.00 20 - "Excavation and Fill" and 33 40 01 - "Storm Drainage". Unit of measurement shall be linear meters (LM). Dimensions, slopes and locations will be specified on the task order.	50	LM	
C714	**Concrete Storm Sewer Pipe (Ø30 cm)**	The Contractor shall perform the installation of 30 cm. diameter concrete storm drainage pipe. The work includes providing granular pipe bedding material, concrete storm drainage pipe, fittings and joints at the finished grade and elevations indicated. Typical details are shown on contract drawing PLATE # 1. All work shall be performed in accordance with Sections 31 23 00.00 20 - "Excavation and Fill" and 33 40 01 - "Storm Drainage". Unit of measurement shall be linear meters (LM). Dimensions, slopes and locations will be specified on the task order.	50	LM	

ELIN	SHORT DESCRIPTION	FULL DESCRIPTION	EST QTY	UNIT OF ISSUE	UNIT PRICE (USD)
C715	**Concrete Storm Sewer Pipe (Ø40 cm)**	The Contractor perform the installation of 40 cm. diameter concrete storm drainage pipe. The work includes providing granular pipe bedding material, concrete storm drainage pipe, fittings and joints at the finished grade and elevations indicated. Typical details are shown on contract drawing PLATE # 1. All work shall be performed in accordance with Sections 31 23 00.00 20 - "Excavation and Fill" and 33 40 01 - "Storm Drainage". Unit of measurement shall be linear meters (LM). Dimensions, slopes and locations will be specified on the task order.	50	LM	
C716	**Concrete Storm Sewer Pipe (Ø50 cm)**	The Contractor shall perform the installation of 50 cm. diameter concrete storm drainage pipe. The work includes providing granular pipe bedding material, concrete storm drainage pipe, fittings and joints at the finished grade and elevations indicated. Typical details are shown on contract drawing PLATE # 1. All work shall be performed in accordance with Sections 31 23 00.00 20 - "Excavation and Fill" and 33 40 01 - "Storm Drainage". Unit of measurement shall be linear meters (LM). Dimensions, slopes and locations will be specified on the task order.	50	LM	
C717	**Concrete Storm Sewer Pipe (Ø60 cm)**	The Contractor shall perform the installation of 60 cm. diameter concrete storm drainage pipe. The work includes providing granular pipe bedding material, concrete storm drainage pipe, fittings and joints at the finished grade and elevations indicated. Typical details are shown on contract drawing PLATE # 1. All work shall be performed in accordance with Sections 31 23 00.00 20 - "Excavation and Fill" and 33 40 01 - "Storm Drainage". Unit of measurement shall be linear meters (LM). Dimensions, slopes and locations will be specified on the task order.	50	LM	
C718	**PVC Storm Sewer Pipe (Ø12.5 cm)**	The Contractor shall perform the installation of 12.5 cm. diameter PVC storm drainage pipe. The work includes providing granular pipe bedding material, PVC storm drainage pipe, fittings and joints at the finished grade and elevations indicated. Typical details are shown on contract drawing PLATE # 3. All work shall be performed in accordance with Sections 31 23 00.00 20 - "Excavation and Fill" and 33 40 01 - "Storm Drainage". Unit of measurement shall be linear meters (LM). Dimensions, slopes and locations will be specified on the task order.	50	LM	
C719	**PVC Storm Sewer Pipe (Ø16 cm)**	The Contractor shall perform the installation of 16 cm. diameter PVC storm drainage pipe. The work includes providing granular pipe bedding material, PVC storm drainage pipe, fittings and joints at the finished grade and elevations indicated. Typical details are shown on contract drawing PLATE # 3. All work shall be performed in accordance with Sections 31 23 00.00 20 - "Excavation and Fill" and 33 40 01 - "Storm Drainage". Unit of measurement shall be linear meters (LM). Dimensions, slopes and locations will be specified on the task order.	50	LM	
C720	**PVC Storm Sewer Pipe (20 cm)**	The Contractor shall perform the installation of 20 cm. diameter PVC storm drainage pipe. The work includes providing granular pipe bedding material, PVC storm drainage pipe, fittings and joints at the finished grade and elevations indicated. Typical details are shown on contract drawing PLATE # 3. All work shall be performed in accordance with Sections 31 23 00.00 20 - "Excavation and Fill" and 33 40 01 - "Storm Drainage". Unit of measurement shall be linear meters (LM). Dimensions, slopes and locations will be specified on the task order.	50	LM	

ELIN	SHORT DESCRIPTION	FULL DESCRIPTION	EST QTY	UNIT OF ISSUE	UNIT PRICE (USD)
C721	**PVC Storm Sewer Pipe (Ø25 cm)**	The Contractor shall perform the installation of 25 cm. diameter PVC storm drainage pipe. The work includes providing granular pipe bedding material, PVC storm drainage pipe, fittings and joints at the finished grade and elevations indicated. Typical details are shown on contract drawing PLATE # 1. All work shall be performed in accordance with Sections 31 23 00.00 20 - "Excavation and Fill" and 33 40 01 - "Storm Drainage". Unit of measurement shall be linear meters (LM). Dimensions, slopes and locations will be specified on the task order.	50	LM	
C722	**PVC Storm Sewer Pipe (Ø31.5 cm)**	The Contractor shall perform the installation of 31.5 cm. diameter PVC storm drainage pipe. The work includes providing granular pipe bedding material, PVC storm drainage pipe, fittings and joints at the finished grade and elevations indicated. Typical details are shown on contract drawing PLATE # 1. All work shall be performed in accordance with Sections 31 23 00.00 20 - "Excavation and Fill" and 33 40 01 - "Storm Drainage". Unit of measurement shall be linear meters (LM). Dimensions, slopes and locations will be specified on the task order.	50	LM	
C723	**PVC Storm Sewer Pipe (Ø40 cm)**	The Contractor shall perform the installation of 40 cm. diameter PVC storm drainage pipe. The work includes providing granular pipe bedding material, PVC storm drainage pipe, fittings and joints at the finished grade and elevations indicated. Typical details are shown on contract drawing PLATE # 1. All work shall be performed in accordance with Sections 31 23 00.00 20 - "Excavation and Fill" and 33 40 01 - "Storm Drainage". Unit of measurement shall be linear meters (LM). Dimensions, slopes and locations will be specified on the task order.	50	LM	
C724	**Construct Storm Drainage Headwalls**	The Contractor shall perform the construction of reinforced concrete headwalls. The work includes performing site preparation, excavation and /or fill, forming, reinforcement, concrete placement, backfill, compaction, removal of excess material and grading, all as necessary to construct concrete storm drainage headwalls at the finished grades and elevations indicated. Typical details are shown on contract drawing PLATE # 5. All work shall be performed in accordance with Sections 31 23 00.00 20 - "Excavation and Fill", 33 40 01 - "Storm Drainage", and 03 33 00 -"Cast-In-Place Architectural Concrete". Unit of measurement shall be Each (EA). Units and locations will be specified on the task order.	4	EA	
C725	**Install Pre-Cast Storm Sewer Manhole (0 - 1 meter depth)**	The Contractor shall perform the installation of pre-cast concrete storm sewer manholes. The work includes supply, delivery and installation of pre-cast concrete manholes, including manhole base, riser, eccentric cone, frames and covers, as applicable, and connection of pipe, all as necessary for the construction of concrete storm drainage manholes at the finished grades and elevations indicated. Typical details are shown on contract drawing PLATE # 2. All work shall be performed in accordance with Sections 31 23 00.00 20 - "Excavation and Fill", 33 40 01 - "Storm Drainage", 03 33 00 -"Cast-In-Place Architectural Concrete". Unit of measurement shall be EA (EA). Units and locations will be specified on the task order.	5	EA	

ELIN	SHORT DESCRIPTION	FULL DESCRIPTION	EST QTY	UNIT OF ISSUE	UNIT PRICE (USD)
C726	**Install Pre-Cast Storm Sewer Manhole (1 - 3 meter depth)**	The Contractor shall perform the installation of pre-cast concrete storm sewer manholes. The work includes supply, delivery and installation of pre-cast concrete manholes, including manhole base, riser, eccentric cone, frames and covers, as applicable, and connection of pipe, all as necessary for the construction of concrete storm drainage manholes at the finished grades and elevations indicated. Typical details are shown on contract drawing PLATE # 2. All work shall be performed in accordance with Sections 31 23 00.00 20 - "Excavation and Fill", 33 40 01 - "Storm Drainage", 03 33 00 -"Cast-In-Place Architectural Concrete". Unit of measurement shall be Each (EA). Units and locations will be specified on the task order.	5	EA	
C727	**Install Pre-cast Concrete Storm Drainage Catch Basin**	The Contractor shall perform the installation of pre-cast concrete storm drainage catch basins. The work includes excavation, supply, delivery and installation of pre-cast concrete catch basins, including base, riser, frames and grating, as applicable, and connection to piping, all as necessary for the construction of concrete storm drainage catch basins at the finished grades and elevations indicated. Typical details are shown on contract drawing PLATE # 6. All work shall be performed in accordance with Sections 31 23 00.00 20 - "Excavation and Fill", 33 40 01 - "Storm Drainage". Unit of measurement shall be Each (EA). Units and locations will be specified on the task order.	6	EA	
C728	**Construct Brick Storm Drainage Catch Basin**	The Contractor shall perform the fabrication of brick storm drainage catch basins. The work includes excavation, brick work, armored concrete base, riser, walls, patching and finish, frames and grating, as applicable, and connection to piping, all as necessary for the construction of brick storm drainage catch basins at the finished grades and elevations indicated. All work shall be performed in accordance with Sections 31 23 00.00 20 - "Excavation and Fill", 33 40 01 - "Storm Drainage". Unit of measurement shall be Each (EA). Units and locations will be specified on the task order.	12	EA	
C729	**Install Rip-Rap Storm Drainage Channel Lining**	The Contractor shall install rip-rap storm drainage channel lining. The work includes supply, delivery and installation of rip-rap channel lining. Typical detail is shown on contract drawing PLATE # 4. All work shall be performed in accordance with Sections 31 23 00.00 20 - "Excavation and Fill", 33 40 01 - "Storm Drainage", and 03 33 00 -"Cast-In-Place Architectural Concrete". Unit of measurement shall be square meters (SM), as computed by multiplying, in meters, area length by width, (L x W). Dimensions and locations will be specified on the task order.	50	SM	
C730	**Up-rise Manhole**	The Contractor shall perform the uprising of manhole. The work includes performing removal of frame and cover, bricks placement, reinstallation of frame and cover, removal of excess material and grading, all as necessary to up-rise manhole at the finished grades and elevations indicated. Typical details are shown on contract drawing PLATE # 2. All work shall be performed in accordance with Section 33 40 01 - "Storm Drainage Utilities". Unit of measurement shall be Each (EA). Units and locations will be specified on the task order.	5	EA	

ELIN	SHORT DESCRIPTION	FULL DESCRIPTION	EST QTY	UNIT OF ISSUE	UNIT PRICE (USD)
C731	**Up-rise Drainage Grate**	The Contractor shall perform the uprising of drainage grate. The work includes performing removal of frame and grate, bricks placement, reinstallation of frame and grate, removal of excess material and grading, all as necessary to up-rise drainage grate at the finished grades and elevations indicated. Typical details are shown on contract drawing PLATE # 6. All work shall be performed in accordance with Section 33 40 01 - "Storm Drainage". Unit of measurement shall be Each (EA). Units and locations will be specified on the task order.	5	EA	
C732	**Up-rise Valve or Meter Cover**	The Contractor shall perform the uprising of valve/meter cover. The work includes performing removal of frame and cover, bricks placement, reinstallation of frame and cover, removal of excess material and grading, all as necessary to up-rise frame and cover at the finished grades and elevations indicated. All work shall be performed in accordance with Section 33 40 01 - "Storm Drainage Utilities". Unit of measurement shall be Each (EA). Units and locations will be specified on the task order.	5	EA	
C733	**Aggregate Sub-Base Course for Bituminous Asphalt Pavements**	The Contractor shall perform the placement of crushed aggregate sub-base course for the bituminous asphalt pavement. The work includes performing site preparation, scarifying existing sub-grade, placement of ZA-40 aggregate sub-base, grading and compaction, as necessary for the construction of bituminous asphalt pavement. Minimum sub-base thickness for bituminous asphalt pavement shall be 20 cm compacted to 98% modified proctor density. When damage affects the base and sub-base courses, the damaged courses shall be entirely replaced with new material, which shall match the existing. Typical details are shown on contract drawing PLATE #"s 7, 8 & 10. All work shall be performed in accordance with Section 32 11 24 - "Graded Crushed Aggregate Base Course for Flexible Pavement". Unit of measurement shall be cubic meters (CM), as computed by multiplying, in meters, area length by width by depth, (L x W x D). Dimensions will be specified on the task order.	3,750	CM	
C734	**Aggregate Base Course for Bituminous Asphalt Pavements and Concrete Sidewalks**	The Contractor shall perform the placement of aggregate base course for bituminous asphalt pavement and concrete sidewalks. The work includes performing site preparation, placement of ZA-25 aggregate base, grading and compaction, as necessary for the construction of the bituminous asphalt pavement and concrete sidewalks. Minimum base thickness for bituminous asphalt pavement shall be 20cm compacted to 100% modified proctor density. Minimum base thickness for concrete sidewalks shall be 10 cm compacted to 98% modified proctor density. When damage affects the base and sub-base courses, the damaged courses shall be entirely replaced with new material. Typical details are shown on contract drawing PLATE #"s 7, 8, 10 & 18. All work shall be performed in accordance with Section 32 11 24 - "Graded Crushed Aggregate Base Course for Flexible Pavement". Unit of measurement shall be cubic meters (CM), as computed by multiplying, in meters, area length by width by depth, (L x W x D). Dimensions will be specified on the task order.	5,250	CM	

ELIN	SHORT DESCRIPTION	FULL DESCRIPTION	EST QTY	UNIT OF ISSUE	UNIT PRICE (USD)
C735	**Bituminous Asphalt Pavement Crack Sealing**	The Contractor shall perform crack repair in existing asphalt pavements. The work includes site preparation, cleaning and sealing of cracks by application of hot-poured asphalt cement or bitumen sealant. Typical details are shown on contract drawing PLATE # 9. All work shall be performed in accordance with Section 32 12 11 - "Bituminous Surface Treatment" or Section 32 01 22 "Bituminous Rejuvenation: Slurry Seal". Unit of measurement shall be linear meters (LM), as computed by measurement, in meters, area length (L). Work ordered under this ELIN may be in conjunction with work ordered under ELINS # A738 or #A739.	375	LM	
C736	**Bituminous Asphalt Pavement Repair**	The Contractor shall perform repair of existing bituminous asphalt pavement. The work includes surface preparation, supply, delivery and placement of 10cm compacted hot bituminous asphalt cement and primer coat. Typical details are shown on contract drawing PLATE #10. All work shall be performed in accordance with Section 32 12 17 - "Hot Mix Bituminous Pavement" and Section 32 12 10 – "Bituminous Tack and Prime Coats". Unit of measurement shall be square meters (SM), as computed by multiplying, in meters, area length by width, (L x W).	6,300	SM	
C737	**Bituminous Asphalt Pavement Overlay**	The Contractor shall perform the application of bituminous asphalt pavement overlay to the existing pavement. The work includes surface preparation, supply, delivery, placement of 6 cm compacted hot bituminous asphalt cement D 12 wearing coat and tack coat. Typical details are shown on contract drawing PLATE # 11. All work shall be performed in accordance with Sections 32 12 17 - "Hot Mix Bituminous Pavement" and Section 32 12 10 – "Bituminous Tack and Prime Coats". Unit of measurement shall be square meters (SM), as computed by multiplying, in meters, area length by width, (L x W). Work ordered under this ELIN may be in conjunction with work ordered under ELIN's # A707	10,300	SM	
C738	**Bituminous Asphalt Pavement Slurry Seal**	The Contractor shall perform the application of slurry seal on existing pavement. The work includes all labor, materials, equipment, supervision and transportation required to perform the application of asphalt slurry seal to existing asphalt pavement. The work includes surface preparation, and application of asphalt slurry seal. Typical details are shown on contract drawing PLATE # 17. All work shall be performed in accordance with Sections 32 12 17 -"Bituminous Hot Mix Pavement" and 32 01 22 - "Bituminous Rejuvenation: Slurry Seal". Unit of measurement shall be square meters (SM), as computed by multiplying, in meters, area length by width, (L x W). Dimensions will be specified on the task order. Work ordered under this ELIN may be in conjunction with work ordered under ELINS # A735 and/or #A736.	1,500	SM	

ELIN	SHORT DESCRIPTION	FULL DESCRIPTION	EST QTY	UNIT OF ISSUE	UNIT PRICE (USD)
C739	**Bituminous Asphalt Pavement Surface Treatment**	The Contractor shall perform treatment on the bituminous asphalt pavement. The work includes all labor, materials, equipment, supervision and transportation required to perform the application of bituminous surface treatment. The work includes surface preparation and application of bituminous surface treatment. Typical details are shown on contract drawing PLATE # 17. All work shall be performed in accordance with Sections 32 12 17 Hot Mix Bituminous Pavement & Section 32 12 11-"Bituminous Surface Treatment". Unit of measurement shall be square meters (SM), as computed by multiplying, in meters, area length by width, (L x W). Dimensions will be specified on the task order. Work ordered under this ELIN may be in conjunction with work ordered under ELINS # A735 and/or #A736.	15,300	SM	
C740	**New Bituminous Asphalt Pavement**	The Contractor shall perform the application of new bituminous asphalt pavement. The work includes surface preparation, supply, delivery, placement of a 6 cm compacted bituminous asphalt pavement S 20 binder course, primer coat, 4 cm compacted bituminous asphalt pavement D 12 wearing course, and tack coat. Typical details are shown on contract drawing PLATE #'s 7 & 8. All work shall be performed in accordance with Section 32 12 17 - "Hot Mix Bituminous Pavement". Unit of measurement shall be square meters (SM), as computed by multiplying, in meters, area length, by width, (L x W). Dimensions will be specified on the task order. Work ordered under this ELIN may be in conjunction with work ordered under ELIN's #A700, A708,& A734.	20,300	SM	
C741	**Obliteration of Existing Bituminous Asphalt Pavement Road Markings**	The Contractor shall perform the obliteration of existing road markings. All work shall be performed in accordance with Section 32 17 23.00 20-"Pavement Markings". Unit of measurement shall be square meters (SM) of painted area, as computed by multiplying, in meters, area length, by width, (L x W). Dimensions and locations will be specified on the task order.	850	SM	
C742	**Paint Solid Pavement Lines**	The Contractor shall perform the painting of solid pavement lines. The work includes surface preparation and painting of 10 cm wide solid pavement lines. Application of this ELIN will be used for pavement lateral lines, parking stall and diagonal no-parking lines. All work shall be performed in accordance with Section 32 17 23.00 20 -"Pavement Markings". Unit of measurement shall be linear meters (LM) of painted area. Paint colors, dimensions and locations will be specified on the task order.	1,700	LM	
C743	**Paint Reflective Solid Pavement Lines**	The Contractor shall perform the painting of solid reflective pavement lines. The work includes surface preparation and painting of 10 cm (4 inch) wide solid pavement lines. Application of this ELIN will be used for pavement center and lateral lines only. All work shall be performed in accordance with Section 32 17 23.00 20 -"Pavement Markings". Unit of measurement shall be linear meters (LM) of painted area. Paint colors, dimensions and locations will be specified on the task order.	1,300	LM	

ELIN	SHORT DESCRIPTION	FULL DESCRIPTION	EST QTY	UNIT OF ISSUE	UNIT PRICE (USD)
C744	**Paint Center Pavement Lines**	The Contractor shall perform the painting of center pavement lines. The work includes surface preparation and painting of 10 cm wide center pavement lines. Application of this ELIN will be used for pavement lateral lines, parking stall and diagonal no-parking lines. All work shall be performed in accordance with Section 32 17 23.00 20 -"Pavement Markings". Unit of measurement shall be linear meters (LM) of painted area. Paint colors, dimensions and locations will be specified on the task order.	1,300	LM	
C745	**Paint Reflective Center Pavement Lines**	The Contractor shall perform the painting of center reflective pavement lines. The work includes surface preparation and painting of 10 cm (4 inch) wide reflective center pavement lines. Application of this ELIN will be used for pavement center and lateral lines only. All work shall be performed in accordance with Section 32 17 23.00 20 -"Pavement Markings". Unit of measurement shall be linear meters (LM) of painted area. Paint colors, dimensions and locations will be specified on the task order.	250	LM	
C746	**Paint Concrete Wheel Stops and Curbs**	The Contractor shall perform the painting of existing concrete wheel stops and pavement curbs. The work includes surface preparation and painting of all designated exposed surfaces. All work shall be performed in accordance with Section 32 17 23.00 20 -"Pavement Markings". Unit of measurement shall be square meters (SM) of painted area, as computed by multiplying actual dimensions of paint length, by width, (L x W). Paint colors, dimensions and locations will be specified on the task order.	250	SM	
C747	**Paint Pedestrian Crosswalk Markings**	The Contractor shall perform the painting of pedestrian crosswalk markings. The work includes surface preparation and painting. Typical details are shown on contract drawing PLATE # 14. All work shall be performed in accordance with Section 32 17 23.00 20 -"Pavement Markings". Unit of measurement shall be square meters (SM) of actual painted area, as computed by multiplying actual dimensions of paint length, by width, (L x W). Paint colors and locations will be specified on the task order.	200	SM	
C748	**Paint Reflective Pedestrian Crosswalk Markings**	The Contractor shall perform the painting of reflective pedestrian crosswalk markings. The work includes surface preparation and painting. Typical details are shown on contract drawing PLATE # 14. All work shall be performed in accordance with Section 32 17 23.00 20 -"Pavement Markings". Unit of measurement shall be square meters (SM) of actual painted area, as computed by multiplying actual dimensions of paint length, by width, (L x W). Paint colors and locations will be specified on the task order.	200	SM	
C749	**Paint Stop Markings**	The Contractor shall perform the painting of stop markings. The work includes surface preparation and painting. Typical details are shown on contract drawing PLATE # 14. All work shall be performed in accordance with Section 32 17 23.00 20 -"Pavement Markings". Unit of measurement shall be square meters (SM) of actual painted area, as computed by multiplying actual dimensions of paint length, by width, (L x W). Paint colors and locations will be specified on the task order.	40	SM	

ELIN	SHORT DESCRIPTION	FULL DESCRIPTION	EST QTY	UNIT OF ISSUE	UNIT PRICE (USD)
C750	**Paint Reflective Stop Markings**	The Contractor shall perform the painting of reflective stop markings. The work includes surface preparation and painting. Typical details are shown on contract drawing PLATE # 14. All work shall be performed in accordance with Section 32 17 23.00 20-"Pavement Markings". Unit of measurement shall be square meters (SM) of actual painted area, as computed by multiplying actual dimensions of paint length, by width, (L x W). Paint colors and locations will be specified on the task order.	40	SM	
C751	**Paint Yield Markings**	The Contractor shall perform the painting of yield markings. The work includes surface preparation and painting. Typical details are shown on contract drawing PLATE # 15. All work shall be performed in accordance with Section 32 17 23.00 20 -"Pavement Markings". Unit of measurement shall be Each (EA). Paint colors and locations will be specified on the task order.	13	EA	
C752	**Paint Reflective Yield Markings**	The Contractor shall perform the painting of yield markings. The work includes surface preparation and painting. Typical details are shown on contract drawing PLATE # 15. All work shall be performed in accordance with Section 32 17 23.00 20 -"Pavement Markings". Unit of measurement shall be Each (EA). Paint colors and locations will be specified on the task order.	13	EA	
C753	**Paint Direction Arrows Markings**	The Contractor shall perform the painting of directional arrow markings. The work includes surface preparation and painting. Typical details are shown on contract drawing PLATE # 15. All work shall be performed in accordance with Section 32 17 23.00 20 -"Pavement Markings". Unit of measurement shall be EA (EA). Paint colors and locations will be specified on the task order. Unit of measurement shall be Each (EA). Paint colors and locations will be specified on the task order.	25	EA	
C754	**Paint Reflective Direction Arrows Markings**	The Contractor shall perform the painting of reflective directional arrow markings. The work includes surface preparation and painting. Typical details are shown on contract drawing PLATE # 15. All work shall be performed in accordance with Section 32 17 23.00 20 -"Pavement Markings". Unit of measurement shall be Each (EA). Paint colors and locations will be specified on the task order.	13	EA	
C755	**Paint Special Markings**	The Contractor shall perform the painting of special pavement markings, such as but not limited to, handicap parking symbols and "NO PARKING" letters. The work includes surface preparation and painting. Typical details are shown on contract drawing PLATE # 14. All work shall be performed in accordance with Section 32 17 23.00 20 -"Pavement Markings". Unit of measurement shall be square meters (SM) of actual painted area, as computed by multiplying actual dimensions of paint area length, by width, (L x W). Paint colors and locations will be specified on the task order.	25	SM	
C756	**Pavement Traffic Road Reflectors**	The Contractor shall perform the installation of pavement traffic reflectors. The work includes supply, delivery, surface preparation and installation. All work shall be performed in accordance with Section 32 17 23.00 20 - "Pavement Markings". Unit of measurement shall be Each (EA). Reflector colors and locations will be specified on the task order.	25	EA	

ELIN	SHORT DESCRIPTION	FULL DESCRIPTION	EST QTY	UNIT OF ISSUE	UNIT PRICE (USD)
C757	**Pavement Striping**	The Contractor shall perform the re-striping of existing striped roads and to stripe newly paved or otherwise un-striped roads, in accordance with the Spanish law and PG-3. The work shall include all types of solid and reflective striping and pavement marking of all types, including but not limited to: obliteration of existing road markings, solid and broken striping center and lateral striping, pavement traffic reflectors, all pavement edge markings, turning radius markings, pedestrian crosswalk markings, directional arrows, stop or yield pavement markings, and any special markings required. Typical details are shown on contract drawing PLATE #'S 14, & 15. All work shall be performed in accordance with Section 32 17 23.00 20 -"Pavement Markings". Unit of measurement shall be kilometer (KM) of painted area. Paint colors, dimensions and locations will be specified on the task order.	35	KM	
C758	**Parking Lot Striping**	The Contractor shall perform the re-striping of existing striped parking lots same as existing and to stripe newly paved or otherwise un-striped parking areas. The work shall include all types of solid and reflective striping and pavement marking of all types, including but not limited to: obliteration of existing markings, solid and broken striping, pavement traffic reflectors, all pavement edge makings, turning radius markings, pedestrian crosswalk markings, directional arrows, stop or yield pavement markings, any special markings required, and concrete wheel stops and curbs. Typical details are shown on contract drawing PLATE #'S 14, & 15. All work shall be performed in accordance with Section 32 17 23.00 20-"Pavement Markings". Unit of measurement shall be square meter (SM) of painted area. Paint colors, dimensions and locations will be specified on the task order.	37,500	SM	
C759	**Reinforced Sidewalks Construction**	The Contractor shall perform the construction of 10 cm thick reinforced concrete sidewalks. The work includes site preparation, construction and installation of forms, placement of WWF steel, concrete placement, installation of vapor barrier, installation of expansion joints and control joints, and finish. Typical details are shown on contract drawing PLATE #18. All work shall be performed in accordance with Section 03 33 00-"Cast-In-Place Architectural Concrete". Unit of measurement shall be square meter (SM), as computed by multiplying, in meters, area length, by width, (L x W). Dimensions will be specified on the task order. Work ordered under this ELIN may be in conjunction with work ordered under ELINS # A712 and #A734.	1,500	SM	
C760	**Concrete Wheel Stops**	The Contractor shall provide and install concrete wheel stops. The work includes fabrication and installation of concrete wheel stops. Typical wheel stop construction detail is shown on contract drawing PLATE # 16. All work shall be performed in accordance with Section 03 33 00 -"Cast-In-Place Architectural Concrete". Unit of measurement shall be each (EA). Units and locations will be specified on the task order.	50	EA	
C761	**Clean Culverts**	The Contractor shall clean culverts. The work includes removing dirt, debris and foreign matter that obstructs the interior of the culvert pipe. All work shall be performed in accordance with section 01 57 19.00 20 - "Temporary Environmental Controls". Unit of measurement shall be linear meters (LM). Units and locations will be specified on the task order.	100	LM	

ELIN	SHORT DESCRIPTION	FULL DESCRIPTION	EST QTY	UNIT OF ISSUE	UNIT PRICE (USD)
C762	**Clean Storm Drainage Channels**	The Contractor shall clean storm drainage channels. The work includes removing dirt, debris and foreign matter that obstructs the drainage channel. All work shall be performed in accordance with section 01 57 19.00 20 -"Temporary Environmental Controls". Unit of measurement shall be linear meters (LM). Units and locations will be specified on the task order.	2,500	LM	
C763	**Install Pre-Cast Concrete Curbs**	The Contractor shall provide and install pre-cast concrete curbs. The work includes excavation, lean concrete and placement of pre-cast concrete curbs. Typical detail of pre-cast concrete curb installation is shown on contract drawing PLATE # 17. All work shall be performed in accordance with Section 03 33 00-"Cast-in-Place Architectural Concrete". Unit of measurement shall be linear meters (LM). Units and locations will be specified on the task order.	100	LM	
C764	**Replace Frame and Cover on Existing Utilities**	The Contractor shall replace frame and cover on existing utilities. The work includes removal and disposal of old frame and cover, and providing and installation of new frame and cover to new grade. All work shall be performed in accordance with Section 05 50 00 -"Metal Miscellaneous and Fabrications". Unit of measurement shall be each (EA).	10	EA	
C765	**Install Guard Posts**	The Contractor shall install guard posts. The work includes site preparation, providing steel pipe, internal armoring and anchorage of post with concrete solidly and paint stripes. Typical guard post installation detail is shown on contract drawing PLATE # 16. All work shall be performed in accordance with Sections 05 50 00 -"Metal Miscellaneous and Fabrications" and 03 33 00 -"Cast-in-Place Architectural Concrete". Unit of measurement shall be each (EA).	25	EA	
C766	**Topographical Surveying**	The Contractor shall perform topographical surveying at the job site in the area indicated. The work includes establishing benchmark of elevations and stake out the new grade spots elevation. The survey shall be made with elevations data, mean sea level at Alicante for maintenance and repair works. Should the works are for new construction, the survey shall be made with elevations data, mean sea level at Alicante and U.T.M coordinates which will be provided by the Government. All survey data shall be produced and submitted on AUTOCAD software, latest version. The Contractor shall submit all survey data to the Contracting Officer for approval. Submit all CAD files for the final drawings on CD ROM disks. Scan all files submitted for viruses using the latest version of a commercial scanning program. Unit of measurement shall be square meters (SM), as computed by multiplying, in meters, area length, by width, (L x W).	25,300	SM	

ELIN	SHORT DESCRIPTION	FULL DESCRIPTION	EST QTY	UNIT OF ISSUE	UNIT PRICE (USD)
C767	**Site Plan Layout**	The Contractor shall perform and provide detailed drawings for exact sizes, exact numbers and detailed positioning of items and final as-built drawings that shall clearly depict the technical design of the facility. Drawings shall be in sufficient detail to show compliance with the contract requirements. All work shall be performed in accordance with Computer Aided Design and Drafting Policy. Drawings shall meet the applicable drawing standards specified in the Guide for Architect Engineer Firms available on the website for Atlantic Division, Naval Facilities Engineering Command. All drawings submitted for review shall be in D size, 24 inch x 36 inch, approximately 61 cm x 91 cm. Other drawing size may be used, if approved by the Contracting Officer. Use Naval Station Rota, Public Works Department Title Block. Unit of measurement shall be each (EA).	10	EA	
C768	**Emergency Repairs Asphalt Pot Holes**	The Contractor shall perform emergency repairs to asphalt potholes within the limits threshold of 1sm per hole. Emergency repairs shall be responded within 4 hours of the Government notification during Government regular working hours. If the emergency repair exceed the threshold the Contractor shall provide a Cost Proposal. The work includes removal of all loose debris, broken pieces of pavement and dust. Fill pothole with ready-to-use bituminous polymer modified cold asphalt and spread with rake or shovel and compact cold asphalt with manual roller or tamper to just over the level of the existing pavement. Thickness and application in layers of the bituminous cold asphalt shall be done as recommended by the manufacturer. Cold asphalt patching material shall comply with "Cold Asphalt Specifications"	10	EA	
C800	**Removal of Corrugated and Pre-Formed Metal Sheet Roofing.**	The Contractor shall perform the removal of existing corrugated and pre-formed metal sheet roofing. All rubbish, debris and loose material resulting from removal of corrugated and pre-formed metal sheet roofing shall be removed from the limits of the Naval Station daily. All work shall be performed in accordance with Sections 01 57 19.00 20 & 02 41 00 Unit of measurement shall be square meters (SM), as computed by multiplying, in meters, area length by width (L x W) , including all overlaps, overhangs, around roofing equipment/vents. Vertical walls and general obstructions 30.48 cm. (one foot) and under and all vertical walls over 30.48 cm (one foot) should be added to the square meter total. Dimensions and locations will be specified on the task order.	400	SM	
C801	**Removal of Corrugated and Pre-Formed Metal Roofing Ridge.**	The Contractor shall perform the removal of existing corrugated and pre-formed metal roofing ridge. All rubbish, debris and loose material resulting from removal of corrugated and pre-formed metal roofing ridge shall be removed from limits of the Naval Station daily. All work shall be performed in accordance with Sections 01 57 19.00 20 & 02 41 00 Unit of measurement shall be linear meters (LM) of removed roof ridge. Dimensions and locations will be specified on the task order.	60	LM	

ELIN	SHORT DESCRIPTION	FULL DESCRIPTION	EST QTY	UNIT OF ISSUE	UNIT PRICE (USD)
C802	**Removal of Corrugated Cement-Asbestos Sheet Roofing.**	The Contractor shall perform the removal of existing cement-asbestos sheet roofing. All rubbish, debris and loose material resulting from removal of cement-asbestos sheet roofing shall be removed from limits of the Naval Station daily. All work shall be performed in accordance with Sections 01 57 19.00 20, 02 41 00 & 02 82 14.00 10 Unit of measurement shall be square meters (SM), as computed by multiplying, in meters, area length by width (L x W) , including all overlaps, overhangs, around roofing equipment/vents. Vertical walls and general obstructions 30.48 cm. (one foot) and under and all vertical walls over 30.48 cm (one foot) should be added to the square meter total. Dimensions and locations will be specified on the task order.	1,000	SM	
C803	**Removal of Corrugated Plastic Sheet Roofing.**	The Contractor shall perform the removal of existing corrugated plastic sheet roofing. All rubbish, debris and loose material resulting from removal of corrugated plastic sheet roofing shall be removed from limits of the Naval Station daily. All work shall be performed in accordance with Sections 01 57 19.00 20 & 02 41 00 Unit of measurement shall be square meters (SM), as computed by multiplying, in meters, area length by width (L x W) , including all overlaps, overhangs, around roofing equipment/vents. Vertical walls and general obstructions 30.48 cm. (one foot) and under and all vertical walls over 30.48 cm (one foot) should be added to the square meter total. Dimensions and locations will be specified on the task order.	100	SM	
C804	**Removal of Gravel Surfaced Bituminous Built-Up Roofing.**	The Contractor shall perform the removal of existing gravel surfaced bituminous built-up roofing. Work includes removal of existing loose gravel. All debris and loose material resulting from removal of gravel surfaced bituminous built-up roofing shall be removed from limits of the Naval Station daily. All work shall be performed in accordance with Sections 01 57 19.00 20 & 02 41 00 Unit of measurement shall be square meters (SM), as computed by multiplying, in meters, area length by width (L x W) , including all overlaps, overhangs, around roofing equipment/vents. Vertical walls and general obstructions 30.48 cm. (one foot) and under and all vertical walls over 30.48 cm (one foot) should be added to the square meter total. Dimensions and locations will be specified on the task order.	250	SM	
C805	**Removal of Polymeric Asphalt Sheet Roofing.**	The Contractor shall perform the removal of existing polymeric asphalt sheet roofing. All debris and loose material resulting from removal of polymeric asphalt sheet roofing shall be removed from limits of the Naval Station daily. All work shall be performed in accordance with Sections 01 57 19.00 20 & 02 41 00 Unit of measurement shall be square meters (SM), as computed by multiplying, in meters, area length by width (L x W) , including all overlaps, overhangs, around roofing equipment/vents. Vertical walls and general obstructions 30.48 cm. (one foot) and under and all vertical walls over 30.48 cm (one foot) should be added to the square meter total. Dimensions and locations will be specified on the task order.	2,000	SM	

ELIN	SHORT DESCRIPTION	FULL DESCRIPTION	EST QTY	UNIT OF ISSUE	UNIT PRICE (USD)
C806	**Removal of Inverted Insulated Roofing.**	The Contractor shall perform the removal of existing inverted insulated roofing. Includes removal of existing loose gravel ballast, insulation and all polymeric asphalt sheet roofing membranes, where applicable. All debris and loose material resulting from removal of inverted insulated roofing shall be removed from limits of the Naval Station daily. All work shall be performed in accordance with Sections 01 57 19.00 20 & 02 41 00 Unit of measurement shall be square meters (SM), as computed by multiplying, in meters, area length by width (L x W) , including all overlaps, overhangs, around roofing equipment/vents. Vertical walls and general obstructions 30.48 cm. (one foot) and under and all vertical walls over 30.48 cm (one foot) should be added to the square meter total. Dimensions and locations will be specified on the task order.	600	SM	
C807	**Removal of Loose Gravel Ballast.**	The Contractor shall perform the removal of existing loose gravel ballast from gravel surfaced bituminous built-up and inverted insulated roofing. All debris and loose material resulting from removal of loose gravel ballast shall be removed from limits of the Naval Station daily. All work shall be performed in accordance with Sections 01 57 19.00 20 & 02 41 00 Unit of measurement shall be square meters (SM), as computed by multiplying, in meters, area length by width (L x W) , including all overlaps, overhangs, around roofing equipment/vents. Vertical walls and general obstructions 30.48 cm. (one foot) and under and all vertical walls over 30.48 cm (one foot) should be added to the square meter total. Dimensions and locations will be specified on the task order.	200	SM	
C808	**Removal of Curved Arabic Tile Roofing.**	The Contractor shall perform the removal of existing curved Arabic tile roofing. All debris and loose material resulting from the removal of the curved Arabic tile roofing shall be removed from limits of the Naval Station daily. All work shall be performed in accordance with Sections 01 57 19.00 20 & 02 41 00 Unit of measurement shall be square meters (SM), as computed by multiplying, in meters, area length by width (L x W) , including all overlaps, overhangs, around roofing equipment/vents. Vertical walls and general obstructions 30.48 cm. (one foot) and under and all vertical walls over 30.48 cm (one foot) should be added to the square meter total. Dimensions and locations will be specified on the task order.	200	SM	
C809	**Removal of Rain Gutters and Down Spouts.**	The Contractor shall perform the removal of existing roof gutters and down spouts. Work includes removal of all gutter and/or down spout hangers and fasteners. All debris and loose material resulting from removal of gutters and down spouts shall be removed from limits of the Naval Station daily. All work shall be performed in accordance with Sections 01 57 19.00 20 & 02 41 00 Unit of measurement shall be linear meters (LM) of removed roof gutters and/or down spouts. Dimensions and locations will be specified on the task order.	400	LM	

ELIN	SHORT DESCRIPTION	FULL DESCRIPTION	EST QTY	UNIT OF ISSUE	UNIT PRICE (USD)
C810	**Removal of Polyurethane Foam Roof.**	The Contractor shall perform the removal of existing polyurethane foam roof. All debris and loose material resulting from the removal of existing polyurethane foam roof shall be removed from limits of the Naval Station daily. All work shall be performed in accordance with Sections 01 57 19.00 20 & 02 41 00 Unit of measurement shall be square meters (SM), as computed by multiplying, in meters, area length by width (L x W) , including all overlaps, overhangs, around roofing equipment/vents. Vertical walls and general obstructions 30.48 cm. (one foot) and under and all vertical walls over 30.48 cm (one foot) should be added to the square meter total. Dimensions and locations will be specified on the task order.	1,000	SM	
C811	**Installation of Corrugated Metal Sheet Roofing.**	The Contractor shall perform the installation of corrugated metal sheet roofing. The work includes surface preparation, supply, delivery and installation of corrugated metal sheet roof, all as necessary so as to provide for a complete and functional roofing system. Where applicable, installed corrugated metal sheet roofing shall match existing and adjacent roofing in shape, size and profile. Typical details are shown on contract drawing PLATES #'s 1, 3 & 11. All work shall be performed in accordance with Section 07 41 13 . Unit of measurement shall be square meters (SM), as computed by multiplying, in meters, area length by width (L x W) , including all overlaps, overhangs, around roofing equipment/vents. Vertical walls and general obstructions 30.48 cm. (one foot) and under and all vertical walls over 30.48 cm (one foot) should be added to the square meter total. Dimensions and locations will be specified on the task order.	1,000	SM	
C812	**Installation of Corrugated Sandwich Metal Sheet Roofing.**	The Contractor shall perform the installation of corrugated sandwich metal sheet roofing. The work includes surface preparation, supply, delivery and installation of corrugated sandwich metal sheet roof, all as necessary so as to provide for a complete and functional roofing system. Where applicable, installed corrugated sandwich metal sheet roofing shall match existing and adjacent roofing in shape, size and profile. All work shall be performed in accordance with Section 07 41 13. Unit of measurement shall be square meters (SM), as computed by multiplying, in meters, area length by width (L x W) , including all overlaps, overhangs, around roofing equipment/vents. Vertical walls and general obstructions 30.48 cm. (one foot) and under and all vertical walls over 30.48 cm (one foot) should be added to the square meter total. Dimensions and locations will be specified on the task order.	1,000	SM	
C813	**Installation of Corrugated Metal Sheet Roofing Ridge.**	The Contractor shall perform the installation of corrugated metal sheet roofing ridge. The work includes surface preparation, supply, task and installation of corrugated metal sheet roof ridge, all as necessary so as to provide for a complete and functional roofing system. Where applicable, installed corrugated metal sheet roofing ridge shall match existing and adjacent roofing ridge in shape, size and profile. Typical details are shown on contract drawing PLATES #'s 1, 3 & 11. All work shall be performed in accordance with Section 07 41 13. Unit of measurement shall be linear meters (LM) of installed corrugated metal sheet roofing ridge. Dimensions and locations will be specified on the task order.	30	LM	

ELIN	SHORT DESCRIPTION	FULL DESCRIPTION	EST QTY	UNIT OF ISSUE	UNIT PRICE (USD)
C814	**Installation of Pre-Formed Metal Sheet Roofing.**	The Contractor shall perform the installation of pre-formed metal sheet roofing. The work includes surface preparation, supply, delivery and installation of pre-formed metal sheet roof, all as necessary so as to provide for a complete and functional roofing system. Where applicable, installed pre-formed metal sheet roofing shall match existing and adjacent roofing in shape, size and profile. Typical details are shown on contract drawing PLATES #'s 1, 3 & 11. All work shall be performed in accordance with Section 07 41 13. Unit of measurement shall be square meters (SM), as computed by multiplying, in meters, area length by width (L x W) , including all overlaps, overhangs, around roofing equipment/vents. Vertical walls and general obstructions 30.48 cm. (one foot) and under and all vertical walls over 30.48 cm (one foot) should be added to the square meter total. Dimensions and locations will be specified on the task order.	200	SM	
C815	**Installation of Pre-Formed Metal Sheet Roofing Ridge.**	The Contractor shall perform the installation of pre-formed metal sheet roofing ridge. The work includes surface preparation, supply, task and installation of pre-formed metal sheet roof ridge, all as necessary so as to provide for a complete and functional roofing system. Where applicable, installed pre-formed metal sheet roofing ridge shall match existing and adjacent roofing ridge in shape, size and profile. Typical details are shown on contract drawing PLATES #'s 1, 3 & 11. All work shall be performed in accordance with Section 07 41 13. Unit of measurement shall be linear meters (LM) of installed pre-formed metal sheet roofing ridge. Dimensions and locations will be specified on the task order.	30	LM	
C816	**Installation of Pre-Formed Sandwich Metal Sheet Roofing.**	The Contractor shall perform the installation of pre-formed sandwich metal sheet roofing. The work includes surface preparation, supply, delivery and installation of pre-formed sandwich metal sheet roof, all as necessary so as to provide for a complete and functional roofing system. Where applicable, installed pre-formed sandwich metal sheet roofing shall match existing and adjacent roofing in shape, size and profile. All work shall be performed in accordance with Section 07 41 13. Unit of measurement shall be square meters (SM), as computed by multiplying, in meters, area length by width (L x W) , including all overlaps, overhangs, around roofing equipment/vents. Vertical walls and general obstructions 30.48 cm. (one foot) and under and all vertical walls over 30.48 cm (one foot) should be added to the square meter total. Dimensions and locations will be specified on the task order.	200	SM	
C817	**Re-Sealing of Pre-Formed and Corrugated Metal Sheet Roofing Joints and Overlaps.**	The Contractor shall perform the re-sealing of pre-formed and corrugated metal sheet roofing joints and overlaps with a silicone-rubber base mastic caulking. Existing joint and/or overlap caulking shall be completely removed and the surface area to receive new caulking shall be thoroughly cleaned and prepared. Typical details are shown on contract drawing PLATES #'s 1, 3 & 11. All work shall be performed in accordance with Sections 07 41 13 & 07 92 00. Unit of measurement shall be linear meters (LM) of re-sealed pre-formed and/or corrugated metal sheet roofing joints and/or overlaps. Dimensions and locations will be specified on the task order.	200	LM	

ELIN	SHORT DESCRIPTION	FULL DESCRIPTION	EST QTY	UNIT OF ISSUE	UNIT PRICE (USD)
C818	**Re-Sealing of Pre-Formed and Corrugated Metal Sheet Roofing Fasteners.**	The Contractor shall perform the re-sealing of pre-formed and corrugated metal sheet roofing fasteners with a silicone-rubber base mastic caulking. Existing fasteners caulking shall be completely removed and the surface area to receive new caulking shall be thoroughly cleaned and prepared. Typical details are shown on contract drawing PLATES #'s 1, 3 & 11. All work shall be performed in accordance with Sections 07 41 13 & 07 92 00. Unit of measurement shall be each (EA) re-sealed pre-formed and/or corrugated metal sheet roofing fastener. Quantities and locations will be specified on the task order.	200	EA	
C819	**Waterproofing of union between Pre-Formed and Corrugated Metal Sheet Roofing and Vertical walls.**	The Contractor shall perform the waterproofing of the union between pre-formed and corrugated metal sheet roofing with vertical surfaces by means of Styrene Butadiene Styrene (SBS) modified membrane. Where applicable, existing aluminum finished polymeric asphalt sheets or Styrene Butadiene Styrene (SBS) modified membrane shall be removed and the surface area to receive new Butadiene Styrene (SBS) modified membrane shall be thoroughly cleaned and prepared. Typical details are shown on contract drawing PLATES #'s 1, 3 & 11. All work shall be performed in accordance with Section 07 52 00 and 07 41 13. Unit of measurement shall be linear meters (LM) of installed polymeric asphalt sheet roofing at vertical junctions. Dimensions and locations will be specified on the task order.	50	LM	
C820	**Installation of Corrugated Plastic Sheet Roofing.**	The Contractor shall perform the installation of corrugated plastic sheet roofing. The work , including surface preparation, supply, delivery and installation of corrugated plastic sheet roof, all as necessary so as to provide for a complete and functional roofing system. Where applicable, installed corrugated plastic sheet roofing shall match existing and adjacent roofing in shape, size, color and profile. Typical details are shown on contract drawing PLATE # 1, 3 & 11. All work shall be performed in accordance with Section 07 54 19. Unit of measurement shall be square meters (SM), as computed by multiplying, in meters, area length by width (L x W) , including all overlaps, overhangs, around roofing equipment/vents. Vertical walls and general obstructions 30.48 cm. (one foot) and under and all vertical walls over 30.48 cm (one foot) should be added to the square meter total. Dimensions and locations will be specified on the task order.	100	SM	
C821	**Installation of Corrugated Plastic Sheet Roofing Ridges.**	The Contractor shall perform the installation of corrugated plastic sheet roofing ridges. The work includes surface preparation, supply and installation of corrugated plastic sheet roofing ridges, all as necessary so as to provide for a complete and functional roofing system. Where applicable, installed corrugated plastic sheet roofing ridges shall match existing and adjacent roofing ridges in shape, size, color and profile. Typical details are shown on contract drawing PLATES #'s 1, 3 & 11. All work shall be performed in accordance with Section 07 54 19. Unit of measurement shall be linear meters (LM) installed corrugated plastic sheet roofing ridges. Dimensions and locations will be specified on the task order.	100	LM	

ELIN	SHORT DESCRIPTION	FULL DESCRIPTION	EST QTY	UNIT OF ISSUE	UNIT PRICE (USD)
C822	**Re-Sealing of Corrugated Plastic Sheet Roofing Joints and Overlaps.**	The Contractor shall perform the re-sealing of corrugated plastic sheet roofing joints and overlaps with a silicone-rubber base mastic caulking. Existing joint and/or overlap caulking shall be completely removed and the surface area to receive new caulking shall be thoroughly cleaned and prepared. Typical details are shown on contract drawing PLATES #'s 1, 3 & 11. All work shall be performed in accordance with Sections 07 54 19 & 07 92 00. Unit of measurement shall be linear meters (LM) of re-sealed corrugated plastic sheet roofing joints and/or overlaps. Dimensions and locations will be specified on the task order.	200	LM	
C823	**Re-Sealing of Corrugated Plastic Sheet Roofing Fasteners.**	The Contractor shall perform the re-sealing of corrugated plastic sheet roofing fasteners with a silicone-rubber base mastic caulking. Existing fasteners caulking shall be completely removed and the surface area to receive new caulking shall be thoroughly cleaned and prepared. Typical details are shown on contract drawing PLATES #'s 1, 3 & 11. All work shall be performed in accordance with Sections 07 54 19 & 07 92 00. Unit of measurement shall be each (EA) re-sealed corrugated plastic sheet roofing fastener. Quantities and locations will be specified on the task order.	200	EA	
C824	**Waterproofing of union between Corrugated plastic Sheet Roofing and Vertical walls.**	The Contractor shall perform the waterproofing of the union between corrugated plastic sheet roofing with vertical surfaces by means of Styrene Butadiene Styrene (SBS) modified membrane. Where applicable, existing aluminum finished polymeric asphalt sheets or Styrene Butadiene Styrene (SBS) modified membrane shall be removed and the surface area to receive new Butadiene Styrene (SBS) modified membrane shall be thoroughly cleaned and prepared. Typical details are shown on contract drawing PLATES #'s 1, 3 & 11. All work shall be performed in accordance with Sections 07 52 00 and 07 54 19. Unit of measurement shall be linear meters (LM) of installed polymeric asphalt sheet roofing at vertical junctions. Dimensions and locations will be specified on the task order.	100	LM	
C825	**Installation of Styrene Butadiene Styrene (SBS) Modified Bituminous membrene roofing on Existing "Sevillana" Tile Roofs.**	The Contractor shall perform the installation of Styrene Butadiene Styrene (SBS) Modified Bituminous membrane roofing on existing "Sevillana" roofing. The work includes surface preparation, supply, delivery and installation of Styrene Butadiene Styrene (SBS) Modified Bituminous membrane roofing on existing "Sevillana" tile roofing, all as necessary so as to provide for a complete and functional roofing system. Installation of crickets at junction of deck and vertical surfaces shall be ordered separately under ELIN A807. Typical details are shown on contract drawing PLATES #'s 4, 8, 9, 12, 14, 15 & 16. All work shall be performed in accordance with Section 07 52 00. Unit of measurement shall be square meters (SM), as computed by multiplying, in meters, area length by width (L x W) , including all overlaps, overhangs, around roofing equipment/vents. Dimensions and locations will be specified on the task order.	200	SM	

ELIN	SHORT DESCRIPTION	FULL DESCRIPTION	EST QTY	UNIT OF ISSUE	UNIT PRICE (USD)
C826	**Installation of Styrene Butadiene Styrene (SBS) Modified Bituminous membrane Roofing on Concrete Roof Decks.**	The Contractor shall perform the installation of styrene butadiene styrene (SBS) modified bituminous membrane roofing on concrete roof decks. The work includes surface preparation, supply, delivery and installation of Styrene Butadiene Sstyrene (SBS) modified bituminous membrane roofing on concrete roof decks, all as necessary so as to provide for a complete and functional roofing system. Installation of crickets at junction of deck and vertical surfaces shall be ordered separately under ELIN A807. Typical details are shown on contract drawing PLATES #'s 4, 8, 9, 12, 14, 15 & 16. All work shall be performed in accordance with Section 07 52 00. Unit of measurement shall be square meters (SM), as computed by multiplying, in meters, area length by width (L x W) , including all overlaps, overhangs, around roofing equipment/vents. Dimensions and locations will be specified on the task order.	10,000	SM	
C827	**Installation of Insulated Concrete Roofing Systems.**	The Contractor shall perform the installation of insulated concrete roofing systems. Work includes installation of insulation, sloped cellular concrete and Styrene Butadiene Styrene (SBS) modified bituminous membrane plies, all as necessary so as to provide for a complete and functional roofing system. Averaged thickness of cellular concrete shall not exceed 10 cm. Typical details are shown on contract drawing PLATES #'s 4, 8, 9, 12, 13, 14, 15 & 16. All work shall be performed in accordance with Sections 03 52 00 and 07 52 00. Unit of measurement shall be square meters (SM), as computed by multiplying, in meters, area length by width (L x W) , including all overlaps, overhangs, around roofing equipment/vents. Vertical walls and general obstructions 30.48 cm. (one foot) and under and all vertical walls over 30.48 cm (one foot) should be added to the square meter total. Dimensions and locations will be specified on the task order.	500	SM	
C828	**Installation of Curved Arabic Tile Roofing.**	The Contractor shall perform the installation of curved Arabic tile roofing. The work includes surface preparation, supply, delivery and installation of curved Arabic tile roofing, all as necessary so as to provide for a complete and functional roofing system. Where applicable, installed curved Arabic tile roofing shall match existing and adjacent roofing in shape, size, color and profile. Typical details are shown on contract drawing PLATES #'s 5, 6 & 7. All work shall be performed in accordance with Section 07 32 13. Unit of measurement shall be square meters (SM), as computed by multiplying, in meters, area length by width (L x W) , including all overlaps, overhangs, around roofing equipment/vents. Vertical walls and general obstructions 30.48 cm. (one foot) and under and all vertical walls over 30.48 cm (one foot) should be added to the square meter total. Dimensions and locations will be specified on the task order.	200	SM	

ELIN	SHORT DESCRIPTION	FULL DESCRIPTION	EST QTY	UNIT OF ISSUE	UNIT PRICE (USD)
C829	**Installation of Curved Arabic Tile Roofing Ridges**	The Contractor shall perform the installation of curved Arabic tile roofing ridges. The work includes surface preparation, supply, task and installation of curved Arabic tile roofing ridges, all as necessary so as to provide for a complete and functional roofing system. Where applicable, installed curved Arabic tile roofing ridges shall match existing and adjacent roofing ridge in shape, size, color and profile. Typical details are shown on contract drawing PLATES #'s 5, 6 & 7. All work shall be performed in accordance with Section 07 32 13. Unit of measurement shall be linear meters (LM) installed curved Arabic tile roofing ridges. Dimensions and locations will be specified on the task order.	50	LM	
C830	**Rubber Paint over exiting Curved Arabic Tile Roofing.**	The Contractor shall perform the painting over the existing curved Arabic tile roofing. The work includes surface preparation, supply, delivery and clear rubber painting of curved Arabic tile roofing, all as necessary so as to provide for a complete and functional roofing system. All work shall be performed in accordance with Section 09 90 00. Unit of measurement shall be square meters (SM), as computed by multiplying, in meters, area length by width (L x W) , including all overlaps, overhangs, around roofing equipment/vents. Vertical walls and general obstructions 30.48 cm. (one foot) and under and all vertical walls over 30.48 cm (one foot) should be added to the square meter total. Dimensions and locations will be specified on the task order.	7,500	SM	
C831	**Installation of Sheet Metal Flashing on Aluminum Finished Polymeric (or SBS) Asphalt Sheet Roofing.**	The Contractor shall perform the installation of sheet metal flashing on aluminum finished polymeric (or SBS) asphalt sheet roofing. Typical details are shown on contract drawing PLATE # 4. All work shall be performed in accordance with Section 07 60 00. Unit of measurement shall be square meters (SM), as computed by multiplying, in meters, area length by width (L x W) , including all overlaps, overhangs, around roofing equipment/vents. Vertical walls and general obstructions 30.48 cm. (one foot) and under and all vertical walls over 30.48 cm (one foot) should be added to the square meter total. Dimensions and locations will be specified on the task order.	50	SM	
C832	**Installation of Sheet Metal Flashing on Parapet Copings.**	The Contractor shall perform the installation of sheet metal flashing on parapet copings. Typical details are shown on contract drawing PLATE # 8. All work shall be performed in accordance with Section 07 60 00. Unit of measurement shall be square meters (SM), as computed by multiplying, in meters, area length by width (L x W) , including all overlaps, overhangs, around roofing equipment/vents. Vertical walls and general obstructions 30.48 cm. (one foot) and under and all vertical walls over 30.48 cm (one foot) should be added to the square meter total. Dimensions and locations will be specified on the task order.	100	SM	
C833	**Installation of Sheet Metal Expansion Joint Flashings.**	The Contractor shall perform the installation of sheet metal expansion joint Flashings. Typical details are shown on contract drawing PLATE # 9. All work shall be performed in accordance with Section 07 60 00. Unit of measurement shall be linear meters (LM) of installed sheet metal expansion joint Flashings. Dimensions and locations will be specified on the task order.	100	LM	

ELIN	SHORT DESCRIPTION	FULL DESCRIPTION	EST QTY	UNIT OF ISSUE	UNIT PRICE (USD)
C834	**Installation of Rain Gutters.**	The Contractor shall perform the installation of rain gutters. Work shall include all hangers and fasteners necessary for a complete and functional installation. Typical details are shown on contract drawing PLATE # 11. All work shall be performed in accordance with Section 07 60 00. Unit of measurement shall be linear meters (LM) of installed rain gutters. Dimensions and locations will be specified on the delivery order.	500	LM	
C835	**Installation of Rain Gutters and/or Scupper Down Spouts.**	The Contractor shall perform the installation of rain gutters and/or scupper down spouts. Work shall include all hangers and fasteners necessary for a complete and functional installation. Typical details are shown on contract drawing PLATE # 10. All work shall be performed in accordance with Section 07 60 00. Unit of measurement shall be linear meters (LM) of installed rain gutters and/or scupper down spouts. Dimensions and locations will be specified on the task order.	100	LM	
C836	**Installation of Down Spout Conductor Heads.**	The Contractor shall perform the installation of down spout conductor heads. Typical details are shown on contract drawing PLATE # 10. All work shall be performed in accordance with Section 07 60 00. Unit of measurement shall be each (EA) installed down spout heads. Quantities and locations will be specified on the task order.	25	EA	
C837	**Application of Sprayed Polyurethane Foam (PUF) Roof Coating.**	The Contractor shall perform the application of sprayed polyurethane (PUF) roof coating on existing pre-formed and/or corrugated metal sheet, asbestos-cement, and curved Arabic red tile roofs. Work includes application of sprayed polyurethane and application of elastomeric roof coating. Typical details are shown on contract drawing PLATE # 2. All work shall be performed in accordance with Section 07 57 13. Unit of measurement shall be square meters (SM), as computed by multiplying, in meters, area length by width (L x W) , including all overlaps, overhangs, around roofing equipment/vents. Vertical walls and general obstructions 30.48 cms. (one foot) and under and all vertical walls over 30.48 cms. (one foot) should be added to the square meter total. Dimensions and locations will be specified on the task order.	1,200	SM	
C838	**Re-application of Elastomeric Roof Coating Over Polyurethane Foam (PUF).**	The Contractor shall perform the re-application of elastomeric roof coating over existing polyurethane foam (PUF) roof coating. Work includes removal of insulation which become damaged, overexposed to weather, or contaminated such that they cannot be cleaned and repaired to the satisfaction of the coating applicator, and provide new insulation and re-application of elastomeric roof coating. Typical details are shown on contract drawing PLATE # 2. All work shall be performed in accordance with Section 07 57 13. Unit of measurement shall be square meters (SM), as computed by multiplying, in meters, area length by width (L x W) , including all overlaps, overhangs, around roofing equipment/vents. Vertical walls and general obstructions 30.48 cms. (one foot) and under and all vertical walls over 30.48 cms. (one foot) should be added to the square meter total. Dimensions and locations will be specified on the task order.	8,000	SM	

ELIN	SHORT DESCRIPTION	FULL DESCRIPTION	EST QTY	UNIT OF ISSUE	UNIT PRICE (USD)
C839	**Re-paint Existing Polyurethane Foam.**	The Contractor shall perform the re-application of elastomeric roof coating over existing polyurethane foam coating. Work includes application of elastomeric roof coating over polyurethane foam. Typical details are shown on contract drawing PLATE # 2. All work shall be performed in accordance with Section 07 57 13. Unit of measurement shall be square meters (SM), as computed by multiplying, in meters, area length by width (L x W) , including all overlaps, overhangs, around roofing equipment/vents. Vertical walls and general obstructions 30.48 cm. (one foot) and under and all vertical walls over 30.48 cm (one foot) should be added to the square meter total. Dimensions and locations will be specified on the task order.	8,000	SM	
C840	**Installation of Inverted Insulated Roofing Systems.**	The Contractor shall perform the installation of inverted insulated roofing systems. Work includes installation of polymeric asphalt sheet roofing plies, polystyrene insulation and loose aggregate ballast, all as necessary so as to provide for a complete and functional roofing system. Typical details are shown on contract drawing PLATE # 13. All work shall be performed in accordance with Section 07 55 00. Unit of measurement shall be square meters (SM), as computed by multiplying, in meters, area length by width (L x W) , including all overlaps, overhangs, around roofing equipment/vents. Vertical walls and general obstructions 30.48 cm. (one foot) and under and all vertical walls over 30.48 cm (one foot) should be added to the square meter total. Dimensions and locations will be specified on the task order.	600	SM	
C841	**Installation of Crickets.**	The Contractor shall perform the installation of crickets at junctions of roof deck and vertical surfaces. All work shall be performed in accordance with Sections 03 52 00, 07 55 00 & 07 52 00, as applicable. Unit of measurement shall be linear meters (LM) of installed cricket. Dimensions and locations will be specified on the task order.	100	LM	
C842	**Installation of Expansion Joints.**	The Contractor shall perform the installation of neoprene expansion joints at junctions of roof decks and vertical surfaces. Typical details are shown on contract drawing PLATE # 9. All work shall be performed in accordance with Section 07 60 00. Unit of measurement shall be linear meters (LM) of installed expansion joints. Dimensions and locations will be specified on the task order.	200	LM	
C843	**Re-sealing of Expansion Joints.**	The Contractor shall perform the re-sealing of expansion joints with a silicone-rubber base mastic caulking. Existing joint caulking shall be completely removed and the surface area to receive new caulking shall be thoroughly cleaned and prepared. Typical details are shown on contract drawing PLATE # 9. All work shall be performed in accordance with Sections 07 60 00 & 07 92 00. Unit of measurement shall be linear meters (LM) of re-sealed expansion joint. Dimensions and locations will be specified on the task order.	320	LM	

ELIN	SHORT DESCRIPTION	FULL DESCRIPTION	EST QTY	UNIT OF ISSUE	UNIT PRICE (USD)
C844	**Forming of Slopes With Cellular Concrete.**	The Contractor shall perform the forming of slopes on existing concrete roof decks using cellular concrete. Averaged thickness of cellular concrete shall not exceed 10 cm. . Typical details are shown on contract drawing PLATES #'s 8, 9, 12, 13, 14, 15 & 16. All work shall be performed in accordance with Sections 07 55 00 & 07 52 00. Unit of measurement shall be square meters (SM), as computed by multiplying, in meters, area length by width (L x W) , including all overlaps, overhangs, around roofing equipment/vents. Vertical walls and general obstructions 30.48 cm. (one foot) and under and all vertical walls over 30.48 cm (one foot) should be added to the square meter total. Dimensions and locations will be specified on the task order.	1,000	SM	
C845	**Installation of Roof Mounted Duct and Equipment Supports.**	The Contractor shall perform the installation of roof mounted duct and equipment supports. Typical details are shown on contract drawing PLATE # 15. All work shall be performed in accordance with Section 07 60 00. Unit of measurement shall be each (EA) installed roof mounted duct and/or equipment supports. Quantities and locations will be specified on the task order.	10	EA	
C846	**Replacement of Drain Sumps and Strainers.**	The Contractor shall perform the replacement of existing drain sumps and strainers. Work , including demolition of existing concrete roof deck, removal of existing drain sump and strainer, installation of new roof drain sumps and strainers and patching of roof deck. Typical details are shown on contract drawing PLATE # 16. All work shall be performed in accordance with Section 07 60 00. Unit of measurement shall be each (EA) replaced roof drain sump and strainer. Quantities and locations will be specified on the task order.	10	EA	
C847	**Replacement of Pre-Cast Concrete Parapet Copings.**	The Contractor shall perform the replacement of pre-cast concrete parapet copings. Work includes demolition and removal of existing pre-cast concrete parapet roof copings, installation of new pre-cast concrete parapet copings, patching of parapet walls and repainting to match adjacent surfaces. Typical details are shown on contract drawing PLATES #'s 8 & 13. All work shall be performed in accordance with Section 03 31 01.00 10.Unit of measurement shall be linear meters (LM) of replaced pre-cast concrete parapet copings. Dimensions and locations will be specified on the delivery order. Unit of measurement shall be linear meters (LM) of replaced pre-cast concrete parapet copings. Dimensions and locations will be specified on the task order.	50	LM	
C848	**Installation of Pre-Cast Concrete Down Spout Splash Blocks.**	The Contractor shall perform the installation of pre-cast concrete down spout splash blocks. Typical details are shown on contract drawing PLATE # 10 . All work shall be performed in accordance with Section 03 31 01.00 10. Unit of measurement shall be each (EA) installed pre-cast concrete splash block. Quantities and locations will be specified on the task order.	10	EA	
C849	**Installation of Scupper Drains.**	The Contractor shall perform the installation of scupper drains in existing roof parapet walls. Typical details are shown on contract drawing PLATE # 16. All work shall be performed in accordance with Section 07 60 00. Unit of measurement shall be each (EA) installed scupper drain. Quantities and locations will be specified on the task order.	10	EA	

ELIN	SHORT DESCRIPTION	FULL DESCRIPTION	EST QTY	UNIT OF ISSUE	UNIT PRICE (USD)
C850	**Rubber Paint over Existing Roofing.**	The Contractor shall perform the application of rubber paint coating on existing pre-formed and/or corrugated metal sheet, asbestos-cement, concrete, and Ceramic Tiles roofs. Work includes application of rubber paint coating over existing roofing. All work shall be performed in accordance with Section 09 90 00. Unit of measurement shall be square meters (SM), as computed by multiplying, in meters, area length by width (L x W) , including all overlaps, overhangs, around roofing equipment/vents. Vertical walls and general obstructions 30.48 cm. (one foot) and under and all vertical walls over 30.48 cm (one foot) should be added to the square meter total. Dimensions and locations will be specified on the task order.	1,500	SM	
C851	**Emergency repairs for roofing leaks.**	The Contractor shall perform emergency repairs on roofing leaks within the limits threshold of 16 hours of labor and $3,000 of direct material cost. Emergency repairs shall be responded within 4 hours of the Government notification during Government regular working hours. If the emergency repair exceed the threshold contractor shall provide a Cost Proposal. Dimensions and locations will be specified on the task order. Contractor shall protect all the building interior area affected by the roof leak to prevent any damage.	10	EA	
C900	**Exterior Paint extending from the ground level up to 3.75 LM above ground level.**	The Contractor shall prepare the surface and paint in accordance with SECTION 09 90 00 Paints and Coatings, this ELIN includes all the exterior surfaces up to 3.75LM above ground level and comprise all the surfaces included in the paint tables of SECTION 09 90 00. Locations and paint colors will be specified on each the task order or shall match to the existing color. The measurement method is provided in J-1503040-04	10,000	SM	
C901	**Exterior Paint extending from 3.75LM above ground level up to 30LM above ground level.**	The Contractor shall prepare the surface and paint in accordance with SECTION 09 90 00 Paints and Coatings, this ELIN includes all the exterior surfaces from 3.75LM above ground level up to 30LM above ground level, and comprise all the surfaces included in the paint tables of SECTION 09 90 00. Locations and paint colors will be specified on each the task order or shall match to the existing color. The measurement method is provided in J-1503040-04.	20,000	SM	
C902	**Interior Paint extending from the floor level up to 3.75LM above ground level.**	The Contractor shall prepare the surface and paint in accordance with SECTION 09 90 00 Paints and Coatings, this ELIN includes all the interior surfaces up to 3.75LM above floor level and comprise all the surfaces included in the paint tables of SECTION 09 90 00. Locations and paint colors will be specified on each the task order or shall match to the existing color. The measurement method is provided in J-1503040-04.	15,000	SM	
C903	**Interior Paint extending from 3.75LM above floor level up to 30LM above floor level.**	The Contractor shall prepare the surface and paint in accordance with SECTION 09 90 00 Paints and Coatings, this ELIN includes all the interior surfaces up to 3.75LM above floor level and comprise all the surfaces included in the paint tables of SECTION 09 90 00. Locations and paint colors will be specified on each the task order or shall match to the existing color. The measurement method is provided in J-1503040-04.	30,000	SM	
C1000	**Unit Priced Un-Skilled Labor Work (negotiated)**	Includes all labor and supervision required to perform miscellaneous un-skilled work. Unskilled labor includes, but is not limited to the following types of trades: Laborer, Small Equipment Operator, Helper, etc. Dimensions and locations will be specified on the task order.	600	HR	

ELIN	SHORT DESCRIPTION	FULL DESCRIPTION	EST QTY	UNIT OF ISSUE	UNIT PRICE (USD)
C1001	**Miscellaneous Costs (negotiated)**	Includes all materials, equipment, and subcontracted effort required to perform miscellaneous work. Costs for materials, equipment, and subcontractor effort, not covered under any UPT, shall be negotiated as required for each task order. Units, dimensions, and locations will be specified on the task order.	1	LOT	

EXHIBIT LINE ITEM NUMBERS					
SOLICITATION NO. N33191-15-R-XXXX					
PROVIDE UNIT PRICES FOR INDEFINITE DELIVERY INDEFINITE QUANTITY WORK					
ELINs D700 through D1001					
Third Period - Indefinite Quantity Work					
ELIN	**SHORT DESCRIPTION**	**FULL DESCRIPTION**	**EST QTY**	**UNIT OF ISSUE**	**UNIT PRICE (USD)**
D700	**Demolition and Removal of Bituminous Asphalt Pavement**	The Contractor shall perform the demolition and removal of existing bituminous asphalt pavement. The asphalt pavement shall be saw cut, to a minimum depth of 10 cm, extending out 30.5 cm beyond the edge of the aggregate base to be removed. All saw cuts shall be made with vertical straight faces making one pair of faces at right angles to traffic flow. Typical details are shown on contract drawing PLATE # 10. Broken pavement, debris and resulting loose material shall be removed from limits of the station daily. All work shall be performed in accordance with Sections 01 57 19.00 20 - "Temporary Environmental Controls" & 02 41 00 - "Demolition". Unit of measurement shall be square meters (SM), as computed by multiplying, in meters, area length by width (L x W). Dimensions and locations will be specified on the task order.	7,500	SM	
D701	**Demolition and Removal of Aggregate Base**	The Contractor shall perform the demolition and removal of existing aggregate to a minimum depth of 20 cm. Typical details will be provided with each task order. Debris and resulting loose material shall be removed from limits of the station daily. All work shall be performed in accordance with Sections 01 57 19.00 20 - "Temporary Environmental Controls" & 02 41 00 - "Demolition". Unit of measurement shall be cubic meters (CM), as computed by multiplying, in meters, area length by width by depth (L x W x D). Dimensions and locations will be specified on the task order.	1,875	CM	
D702	**Removal and Reinstallation or Disposal of Concrete Wheel Stops**	The Contractor shall perform the removal and reinstallation or disposal of existing concrete wheel stops. All work shall be performed in accordance with Sections 01 57 19.00 20 - "Temporary Environmental Controls" & 02 41 00 - "Demolition". Unit of measurement shall be Each (EA). Units and locations will be specified on the task order.	100	EA	
D703	**Demolition and Removal of Concrete Curbs**	The Contractor shall perform the demolition and removal of existing pre-cast concrete curbs. All work shall be performed in accordance with Section 01 57 19.00 20 - "Temporary Environmental Controls" & 02 41 00 - "Demolition". Unit of measurement shall be linear meters (LM). Units and locations will be specified on the task order.	125	LM	
D704	**Demolition and Removal of Storm Drainage Headwalls**	The Contractor shall perform the demolition and removal of existing storm drainage headwalls. Broken concrete, debris and resulting loose material shall be removed from limits of the station daily. All work shall be performed in accordance with Section 01 57 19.00 20 - "Temporary Environmental Controls" & 02 41 00 - "Demolition". Unit of measurement shall be Each (EA). Units and locations will be specified on the task order.	4	EA	
D705	**Demolition and Removal of Concrete Pipe Culverts**	The Contractor shall perform the removal of existing pipe culverts. Old culvert pipe, debris and resulting loose material shall be removed from limits of the station daily. All work shall be performed in accordance with Section 01 57 19.00 20 - "Temporary Environmental Controls" & 02 41 00 - "Demolition". Unit of measurement shall be linear meters (LM). Units and locations will be specified on the task order.	100	LM	

ELIN	SHORT DESCRIPTION	FULL DESCRIPTION	EST QTY	UNIT OF ISSUE	UNIT PRICE (USD)
D706	**Demolition and Removal of Concrete Sidewalks**	The Contractor shall perform demolition and removal of existing concrete sidewalks, all as indicated on the contract task order and site plans (as applicable). Where required and indicated, concrete shall be saw cut. Typical details will be provided with each task order. Broken concrete, debris and resulting loose material shall be removed from limits of the station daily. All work shall be performed in accordance with Sections 01 57 19.00 20-"Temporary Environmental Controls" & 02 41 00-"Demolition". Unit of measurement shall be square meters (SM), as computed by multiplying, in meters, area length by width (L x W) considering an average depth of 0.1m . Dimensions and locations will be specified on the task order.	1,500	SM	
D707	**Cold Milling of Bituminous Asphalt Pavements**	The Contractor shall perform cold milling 6 cm depth on existing bituminous asphalt pavement. All debris and resulting loose milled material shall be removed from limits of the station daily. All work shall be performed in accordance with Sections 32 0116 17 - "Cold Milling". This ELIN# may be ordered in conjunction with work ordered under ELIN's #A735. Unit of measurement shall be square meters (SM), as computed by multiplying, in meters, area length by width (L x W). Dimensions and locations will be specified on the task order.	6,800	SM	
D708	**Earthwork for Construction of Bituminous Asphalt Pavements**	The Contractor shall perform the general earthwork required for the construction of bituminous asphalt paved roads and parking lots. The work includes performing site preparation, excavation, compaction, removal of excess material and grading, all as necessary to construct bituminous asphalt paved roads, and parking lots at the finished grade and elevations indicated. Typical details are shown on contract drawing PLATE #'s 7 & 8. All work shall be performed in accordance with Section 31 23 00.00 20 - "Excavation and Fill". Unit of measurement shall be cubic meters (CM), as computed by multiplying, in meters, area length by width by depth (L x W x D). Dimensions, slopes and finished grade will be specified on the task order.	1,700	CM	
D709	**Earthwork for Storm Sewer Pipe (4 meter max. depth)**	The Contractor shall perform the general excavation required for the installation storm drainage pipe. The work includes performing site preparation, excavation, installation of granular pipe bedding, backfill, compacting, removal of excess material and grading, all as necessary to install storm sewer pipe and other related appurtenances at the finished grade and elevations indicated. Maximum depth shall be 4 meter. Typical details are shown on contract drawing PLATE # 1. All work shall be performed in accordance with Section 31 23 00.00 20 - "Excavation and Fill". Unit of measurement shall be cubic meters (CM), as computed by multiplying, in meters, length by width by depth (L x W x D). Dimensions, slopes and finished grade will be specified on the task order.	150	CM	

ELIN	SHORT DESCRIPTION	FULL DESCRIPTION	EST QTY	UNIT OF ISSUE	UNIT PRICE (USD)
D710	**Earthwork for Storm Sewer Manholes (4 meter max. depth)**	The Contractor shall perform the general excavation required for the construction of storm sewer manholes. The work includes performing site preparation, excavation, backfill, compacting, removal of excess material and grading, all as necessary to install storm sewer manholes at the finished grade and elevations indicated. Maximum depth shall be 4 meter. Typical details are shown on contract drawing PLATE # 2. All work shall be performed in accordance with Section 31 23 00.00 20 - "Excavation and Fill". Unit of measurement shall be cubic meters (CM), as computed by multiplying, in meters, length by width by depth (L x W x D). Dimensions, slopes and finished grade will be specified on the task order.	60	CM	
D711	**Earthwork For Storm Drainage Channels/Reshaping (4 meter max. depth)**	The Contractor shall perform the general excavation required for the construction of storm drainage channels. The work includes performing site preparation, excavation for new channel and reshaping for old channel, backfill, compaction, installation of organic mat, removal of excess material and grading, all as necessary to construct storm drainage channels at the finished grade and elevations indicated. Typical details are shown on contract drawing PLATE # 3. All work shall be performed in accordance with Section 31 23 00.00 20 - "Excavation and Fill". Unit of measurement shall be cubic meters (CM), as computed by multiplying, in meters, length by width by depth (L x W x D). Dimensions, slopes and finished grade will be specified on the task order.	150	CM	
D712	**Earthwork for Construction of Sidewalks**	The Contractor shall perform the general earthwork required for the construction of concrete sidewalks. The work includes performing site preparation, excavation, compaction, and removal of excess material and grading, all as necessary to construct concrete sidewalks at the finished grade and elevations indicated. Typical details are shown on contract drawing PLATE #'18. All work shall be performed in accordance with Section 31 00 00 -"Earthwork". Unit of measurement shall be square meters (SM), as computed by multiplying, in meters, area length by width (L x W) considering an average depth of 0.1m . Dimensions and locations will be specified on the task order.	1,500	SM	
D713	**Concrete Storm Sewer Pipe (Ø20 cm)**	The Contractor shall perform the installation of 20 cm. diameter concrete storm drainage pipe. The work includes providing granular pipe bedding material, concrete storm drainage pipe, fittings and joints at the finished grade and elevations indicated. Typical details are shown on contract drawing PLATE # 1. All work shall be performed in accordance with Sections 31 23 00.00 20 - "Excavation and Fill" and 33 40 01 - "Storm Drainage". Unit of measurement shall be linear meters (LM). Dimensions, slopes and locations will be specified on the task order.	50	LM	
D714	**Concrete Storm Sewer Pipe (Ø30 cm)**	The Contractor shall perform the installation of 30 cm. diameter concrete storm drainage pipe. The work includes providing granular pipe bedding material, concrete storm drainage pipe, fittings and joints at the finished grade and elevations indicated. Typical details are shown on contract drawing PLATE # 1. All work shall be performed in accordance with Sections 31 23 00.00 20 - "Excavation and Fill" and 33 40 01 - "Storm Drainage". Unit of measurement shall be linear meters (LM). Dimensions, slopes and locations will be specified on the task order.	50	LM	

ELIN	SHORT DESCRIPTION	FULL DESCRIPTION	EST QTY	UNIT OF ISSUE	UNIT PRICE (USD)
D715	**Concrete Storm Sewer Pipe (Ø40 cm)**	The Contractor perform the installation of 40 cm. diameter concrete storm drainage pipe. The work includes providing granular pipe bedding material, concrete storm drainage pipe, fittings and joints at the finished grade and elevations indicated. Typical details are shown on contract drawing PLATE # 1. All work shall be performed in accordance with Sections 31 23 00.00 20 - “Excavation and Fill” and 33 40 01 - “Storm Drainage”. Unit of measurement shall be linear meters (LM). Dimensions, slopes and locations will be specified on the task order.	50	LM	
D716	**Concrete Storm Sewer Pipe (Ø50 cm)**	The Contractor shall perform the installation of 50 cm. diameter concrete storm drainage pipe. The work includes providing granular pipe bedding material, concrete storm drainage pipe, fittings and joints at the finished grade and elevations indicated. Typical details are shown on contract drawing PLATE # 1. All work shall be performed in accordance with Sections 31 23 00.00 20 - “Excavation and Fill” and 33 40 01 - “Storm Drainage". Unit of measurement shall be linear meters (LM). Dimensions, slopes and locations will be specified on the task order.	50	LM	
D717	**Concrete Storm Sewer Pipe (Ø60 cm)**	The Contractor shall perform the installation of 60 cm. diameter concrete storm drainage pipe. The work includes providing granular pipe bedding material, concrete storm drainage pipe, fittings and joints at the finished grade and elevations indicated. Typical details are shown on contract drawing PLATE # 1. All work shall be performed in accordance with Sections 31 23 00.00 20 - “Excavation and Fill” and 33 40 01 - “Storm Drainage”. Unit of measurement shall be linear meters (LM). Dimensions, slopes and locations will be specified on the task order.	50	LM	
D718	**PVC Storm Sewer Pipe (Ø12.5 cm)**	The Contractor shall perform the installation of 12.5 cm. diameter PVC storm drainage pipe. The work includes providing granular pipe bedding material, PVC storm drainage pipe, fittings and joints at the finished grade and elevations indicated. Typical details are shown on contract drawing PLATE # 3. All work shall be performed in accordance with Sections 31 23 00.00 20 - “Excavation and Fill” and 33 40 01 - “Storm Drainage”. Unit of measurement shall be linear meters (LM). Dimensions, slopes and locations will be specified on the task order.	50	LM	
D719	**PVC Storm Sewer Pipe (Ø16 cm)**	The Contractor shall perform the installation of 16 cm. diameter PVC storm drainage pipe. The work includes providing granular pipe bedding material, PVC storm drainage pipe, fittings and joints at the finished grade and elevations indicated. Typical details are shown on contract drawing PLATE # 3. All work shall be performed in accordance with Sections 31 23 00.00 20 - “Excavation and Fill” and 33 40 01 - “Storm Drainage”. Unit of measurement shall be linear meters (LM). Dimensions, slopes and locations will be specified on the task order.	50	LM	
D720	**PVC Storm Sewer Pipe (20 cm)**	The Contractor shall perform the installation of 20 cm. diameter PVC storm drainage pipe. The work includes providing granular pipe bedding material, PVC storm drainage pipe, fittings and joints at the finished grade and elevations indicated. Typical details are shown on contract drawing PLATE # 3. All work shall be performed in accordance with Sections 31 23 00.00 20 - “Excavation and Fill” and 33 40 01 - “Storm Drainage”. Unit of measurement shall be linear meters (LM). Dimensions, slopes and locations will be specified on the task order.	50	LM	

ELIN	SHORT DESCRIPTION	FULL DESCRIPTION	EST QTY	UNIT OF ISSUE	UNIT PRICE (USD)
D721	**PVC Storm Sewer Pipe (Ø25 cm)**	The Contractor shall perform the installation of 25 cm. diameter PVC storm drainage pipe. The work includes providing granular pipe bedding material, PVC storm drainage pipe, fittings and joints at the finished grade and elevations indicated. Typical details are shown on contract drawing PLATE # 1. All work shall be performed in accordance with Sections 31 23 00.00 20 - "Excavation and Fill" and 33 40 01 - "Storm Drainage". Unit of measurement shall be linear meters (LM). Dimensions, slopes and locations will be specified on the task order.	50	LM	
D722	**PVC Storm Sewer Pipe (Ø31.5 cm)**	The Contractor shall perform the installation of 31.5 cm. diameter PVC storm drainage pipe. The work includes providing granular pipe bedding material, PVC storm drainage pipe, fittings and joints at the finished grade and elevations indicated. Typical details are shown on contract drawing PLATE # 1. All work shall be performed in accordance with Sections 31 23 00.00 20 - "Excavation and Fill" and 33 40 01 - "Storm Drainage". Unit of measurement shall be linear meters (LM). Dimensions, slopes and locations will be specified on the task order.	50	LM	
D723	**PVC Storm Sewer Pipe (Ø40 cm)**	The Contractor shall perform the installation of 40 cm. diameter PVC storm drainage pipe. The work includes providing granular pipe bedding material, PVC storm drainage pipe, fittings and joints at the finished grade and elevations indicated. Typical details are shown on contract drawing PLATE # 1. All work shall be performed in accordance with Sections 31 23 00.00 20 - "Excavation and Fill" and 33 40 01 - "Storm Drainage". Unit of measurement shall be linear meters (LM). Dimensions, slopes and locations will be specified on the task order.	50	LM	
D724	**Construct Storm Drainage Headwalls**	The Contractor shall perform the construction of reinforced concrete headwalls. The work includes performing site preparation, excavation and /or fill, forming, reinforcement, concrete placement, backfill, compaction, removal of excess material and grading, all as necessary to construct concrete storm drainage headwalls at the finished grades and elevations indicated. Typical details are shown on contract drawing PLATE # 5. All work shall be performed in accordance with Sections 31 23 00.00 20 - "Excavation and Fill", 33 40 01 - "Storm Drainage", and 03 33 00 -"Cast-In-Place Architectural Concrete". Unit of measurement shall be Each (EA). Units and locations will be specified on the task order.	4	EA	
D725	**Install Pre-Cast Storm Sewer Manhole (0 - 1 meter depth)**	The Contractor shall perform the installation of pre-cast concrete storm sewer manholes. The work includes supply, delivery and installation of pre-cast concrete manholes, including manhole base, riser, eccentric cone, frames and covers, as applicable, and connection of pipe, all as necessary for the construction of concrete storm drainage manholes at the finished grades and elevations indicated. Typical details are shown on contract drawing PLATE # 2. All work shall be performed in accordance with Sections 31 23 00.00 20 - "Excavation and Fill", 33 40 01 - "Storm Drainage", 03 33 00 -"Cast-In-Place Architectural Concrete". Unit of measurement shall be EA (EA). Units and locations will be specified on the task order.	5	EA	

ELIN	SHORT DESCRIPTION	FULL DESCRIPTION	EST QTY	UNIT OF ISSUE	UNIT PRICE (USD)
D726	**Install Pre-Cast Storm Sewer Manhole (1 - 3 meter depth)**	The Contractor shall perform the installation of pre-cast concrete storm sewer manholes. The work includes supply, delivery and installation of pre-cast concrete manholes, including manhole base, riser, eccentric cone, frames and covers, as applicable, and connection of pipe, all as necessary for the construction of concrete storm drainage manholes at the finished grades and elevations indicated. Typical details are shown on contract drawing PLATE # 2. All work shall be performed in accordance with Sections 31 23 00.00 20 - "Excavation and Fill", 33 40 01 - "Storm Drainage", 03 33 00 -"Cast-In-Place Architectural Concrete". Unit of measurement shall be Each (EA). Units and locations will be specified on the task order.	5	EA	
D727	**Install Pre-cast Concrete Storm Drainage Catch Basin**	The Contractor shall perform the installation of pre-cast concrete storm drainage catch basins. The work includes excavation, supply, delivery and installation of pre-cast concrete catch basins, including base, riser, frames and grating, as applicable, and connection to piping, all as necessary for the construction of concrete storm drainage catch basins at the finished grades and elevations indicated. Typical details are shown on contract drawing PLATE # 6. All work shall be performed in accordance with Sections 31 23 00.00 20 - "Excavation and Fill", 33 40 01 - "Storm Drainage". Unit of measurement shall be Each (EA). Units and locations will be specified on the task order.	6	EA	
D728	**Construct Brick Storm Drainage Catch Basin**	The Contractor shall perform the fabrication of brick storm drainage catch basins. The work includes excavation, brick work, armored concrete base, riser, walls, patching and finish, frames and grating, as applicable, and connection to piping, all as necessary for the construction of brick storm drainage catch basins at the finished grades and elevations indicated. All work shall be performed in accordance with Sections 31 23 00.00 20 - "Excavation and Fill", 33 40 01 - "Storm Drainage". Unit of measurement shall be Each (EA). Units and locations will be specified on the task order.	12	EA	
D729	**Install Rip-Rap Storm Drainage Channel Lining**	The Contractor shall install rip-rap storm drainage channel lining. The work includes supply, delivery and installation of rip-rap channel lining. Typical detail is shown on contract drawing PLATE # 4. All work shall be performed in accordance with Sections 31 23 00.00 20 - "Excavation and Fill", 33 40 01 - "Storm Drainage", and 03 33 00 -"Cast-In-Place Architectural Concrete". Unit of measurement shall be square meters (SM), as computed by multiplying, in meters, area length by width, (L x W). Dimensions and locations will be specified on the task order.	50	SM	
D730	**Up-rise Manhole**	The Contractor shall perform the uprising of manhole. The work includes performing removal of frame and cover, bricks placement, reinstallation of frame and cover, removal of excess material and grading, all as necessary to up-rise manhole at the finished grades and elevations indicated. Typical details are shown on contract drawing PLATE # 2. All work shall be performed in accordance with Section 33 40 01 - "Storm Drainage Utilities". Unit of measurement shall be Each (EA). Units and locations will be specified on the task order.	5	EA	

ELIN	SHORT DESCRIPTION	FULL DESCRIPTION	EST QTY	UNIT OF ISSUE	UNIT PRICE (USD)
D731	**Up-rise Drainage Grate**	The Contractor shall perform the uprising of drainage grate. The work includes performing removal of frame and grate, bricks placement, reinstallation of frame and grate, removal of excess material and grading, all as necessary to up-rise drainage grate at the finished grades and elevations indicated. Typical details are shown on contract drawing PLATE # 6. All work shall be performed in accordance with Section 33 40 01 - "Storm Drainage". Unit of measurement shall be Each (EA). Units and locations will be specified on the task order.	5	EA	
D732	**Up-rise Valve or Meter Cover**	The Contractor shall perform the uprising of valve/meter cover. The work includes performing removal of frame and cover, bricks placement, reinstallation of frame and cover, removal of excess material and grading, all as necessary to up-rise frame and cover at the finished grades and elevations indicated. All work shall be performed in accordance with Section 33 40 01 - "Storm Drainage Utilities". Unit of measurement shall be Each (EA). Units and locations will be specified on the task order.	5	EA	
D733	**Aggregate Sub-Base Course for Bituminous Asphalt Pavements**	The Contractor shall perform the placement of crushed aggregate sub-base course for the bituminous asphalt pavement. The work includes performing site preparation, scarifying existing sub-grade, placement of ZA-40 aggregate sub-base, grading and compaction, as necessary for the construction of bituminous asphalt pavement. Minimum sub-base thickness for bituminous asphalt pavement shall be 20 cm compacted to 98% modified proctor density. When damage affects the base and sub-base courses, the damaged courses shall be entirely replaced with new material, which shall match the existing. Typical details are shown on contract drawing PLATE #"s 7, 8 & 10. All work shall be performed in accordance with Section 32 11 24 - "Graded Crushed Aggregate Base Course for Flexible Pavement". Unit of measurement shall be cubic meters (CM), as computed by multiplying, in meters, area length by width by depth, (L x W x D). Dimensions will be specified on the task order.	3,750	CM	
D734	**Aggregate Base Course for Bituminous Asphalt Pavements and Concrete Sidewalks**	The Contractor shall perform the placement of aggregate base course for bituminous asphalt pavement and concrete sidewalks. The work includes performing site preparation, placement of ZA-25 aggregate base, grading and compaction, as necessary for the construction of the bituminous asphalt pavement and concrete sidewalks. Minimum base thickness for bituminous asphalt pavement shall be 20cm compacted to 100% modified proctor density. Minimum base thickness for concrete sidewalks shall be 10 cm compacted to 98% modified proctor density. When damage affects the base and sub-base courses, the damaged courses shall be entirely replaced with new material. Typical details are shown on contract drawing PLATE #"s 7, 8, 10 & 18. All work shall be performed in accordance with Section 32 11 24 - "Graded Crushed Aggregate Base Course for Flexible Pavement". Unit of measurement shall be cubic meters (CM), as computed by multiplying, in meters, area length by width by depth, (L x W x D). Dimensions will be specified on the task order.	5,250	CM	

ELIN	SHORT DESCRIPTION	FULL DESCRIPTION	EST QTY	UNIT OF ISSUE	UNIT PRICE (USD)
D735	**Bituminous Asphalt Pavement Crack Sealing**	The Contractor shall perform crack repair in existing asphalt pavements. The work includes site preparation, cleaning and sealing of cracks by application of hot-poured asphalt cement or bitumen sealant. Typical details are shown on contract drawing PLATE # 9. All work shall be performed in accordance with Section 32 12 11 - "Bituminous Surface Treatment" or Section 32 01 22 "Bituminous Rejuvenation: Slurry Seal". Unit of measurement shall be linear meters (LM), as computed by measurement, in meters, area length (L). Work ordered under this ELIN may be in conjunction with work ordered under ELINS # A738 or #A739.	375	LM	
D736	**Bituminous Asphalt Pavement Repair**	The Contractor shall perform repair of existing bituminous asphalt pavement. The work includes surface preparation, supply, delivery and placement of 10cm compacted hot bituminous asphalt cement and primer coat. Typical details are shown on contract drawing PLATE #10. All work shall be performed in accordance with Section 32 12 17 - "Hot Mix Bituminous Pavement" and Section 32 12 10 – "Bituminous Tack and Prime Coats". Unit of measurement shall be square meters (SM), as computed by multiplying, in meters, area length by width, (L x W).	6,300	SM	
D737	**Bituminous Asphalt Pavement Overlay**	The Contractor shall perform the application of bituminous asphalt pavement overlay to the existing pavement. The work includes surface preparation, supply, delivery, placement of 6 cm compacted hot bituminous asphalt cement D 12 wearing coat and tack coat. Typical details are shown on contract drawing PLATE # 11. All work shall be performed in accordance with Sections 32 12 17 - "Hot Mix Bituminous Pavement" and Section 32 12 10 – "Bituminous Tack and Prime Coats". Unit of measurement shall be square meters (SM), as computed by multiplying, in meters, area length by width, (L x W). Work ordered under this ELIN may be in conjunction with work ordered under ELIN's # A707	10,300	SM	
D738	**Bituminous Asphalt Pavement Slurry Seal**	The Contractor shall perform the application of slurry seal on existing pavement. The work includes all labor, materials, equipment, supervision and transportation required to perform the application of asphalt slurry seal to existing asphalt pavement. The work includes surface preparation, and application of asphalt slurry seal. Typical details are shown on contract drawing PLATE # 17. All work shall be performed in accordance with Sections 32 12 17 -"Bituminous Hot Mix Pavement" and 32 01 22 - "Bituminous Rejuvenation: Slurry Seal". Unit of measurement shall be square meters (SM), as computed by multiplying, in meters, area length by width, (L x W). Dimensions will be specified on the task order. Work ordered under this ELIN may be in conjunction with work ordered under ELINS # A735 and/or #A736.	1,500	SM	

ELIN	SHORT DESCRIPTION	FULL DESCRIPTION	EST QTY	UNIT OF ISSUE	UNIT PRICE (USD)
D739	**Bituminous Asphalt Pavement Surface Treatment**	The Contractor shall perform treatment on the bituminous asphalt pavement. The work includes all labor, materials, equipment, supervision and transportation required to perform the application of bituminous surface treatment. The work includes surface preparation and application of bituminous surface treatment. Typical details are shown on contract drawing PLATE # 17. All work shall be performed in accordance with Sections 32 12 17 Hot Mix Bituminous Pavement & Section 32 12 11-"Bituminous Surface Treatment". Unit of measurement shall be square meters (SM), as computed by multiplying, in meters, area length by width, (L x W). Dimensions will be specified on the task order. Work ordered under this ELIN may be in conjunction with work ordered under ELINS # A735 and/or #A736.	15,300	SM	
D740	**New Bituminous Asphalt Pavement**	The Contractor shall perform the application of new bituminous asphalt pavement. The work includes surface preparation, supply, delivery, placement of a 6 cm compacted bituminous asphalt pavement S 20 binder course, primer coat, 4 cm compacted bituminous asphalt pavement D 12 wearing course, and tack coat. Typical details are shown on contract drawing PLATE #'s 7 & 8. All work shall be performed in accordance with Section 32 12 17 - "Hot Mix Bituminous Pavement". Unit of measurement shall be square meters (SM), as computed by multiplying, in meters, area length, by width, (L x W). Dimensions will be specified on the task order. Work ordered under this ELIN may be in conjunction with work ordered under ELIN's #A700, A708,& A734.	20,300	SM	
D741	**Obliteration of Existing Bituminous Asphalt Pavement Road Markings**	The Contractor shall perform the obliteration of existing road markings. All work shall be performed in accordance with Section 32 17 23.00 20-"Pavement Markings". Unit of measurement shall be square meters (SM) of painted area, as computed by multiplying, in meters, area length, by width, (L x W). Dimensions and locations will be specified on the task order.	850	SM	
D742	**Paint Solid Pavement Lines**	The Contractor shall perform the painting of solid pavement lines. The work includes surface preparation and painting of 10 cm wide solid pavement lines. Application of this ELIN will be used for pavement lateral lines, parking stall and diagonal no-parking lines. All work shall be performed in accordance with Section 32 17 23.00 20 -"Pavement Markings". Unit of measurement shall be linear meters (LM) of painted area. Paint colors, dimensions and locations will be specified on the task order.	1,700	LM	
D743	**Paint Reflective Solid Pavement Lines**	The Contractor shall perform the painting of solid reflective pavement lines. The work includes surface preparation and painting of 10 cm (4 inch) wide solid pavement lines. Application of this ELIN will be used for pavement center and lateral lines only. All work shall be performed in accordance with Section 32 17 23.00 20 -"Pavement Markings". Unit of measurement shall be linear meters (LM) of painted area. Paint colors, dimensions and locations will be specified on the task order.	1,300	LM	

ELIN	SHORT DESCRIPTION	FULL DESCRIPTION	EST QTY	UNIT OF ISSUE	UNIT PRICE (USD)
D744	**Paint Center Pavement Lines**	The Contractor shall perform the painting of center pavement lines. The work includes surface preparation and painting of 10 cm wide center pavement lines. Application of this ELIN will be used for pavement lateral lines, parking stall and diagonal no-parking lines. All work shall be performed in accordance with Section 32 17 23.00 20 -"Pavement Markings". Unit of measurement shall be linear meters (LM) of painted area. Paint colors, dimensions and locations will be specified on the task order.	1,300	LM	
D745	**Paint Reflective Center Pavement Lines**	The Contractor shall perform the painting of center reflective pavement lines. The work includes surface preparation and painting of 10 cm (4 inch) wide reflective center pavement lines. Application of this ELIN will be used for pavement center and lateral lines only. All work shall be performed in accordance with Section 32 17 23.00 20 -"Pavement Markings". Unit of measurement shall be linear meters (LM) of painted area. Paint colors, dimensions and locations will be specified on the task order.	250	LM	
D746	**Paint Concrete Wheel Stops and Curbs**	The Contractor shall perform the painting of existing concrete wheel stops and pavement curbs. The work includes surface preparation and painting of all designated exposed surfaces. All work shall be performed in accordance with Section 32 17 23.00 20 -"Pavement Markings". Unit of measurement shall be square meters (SM) of painted area, as computed by multiplying actual dimensions of paint length, by width, (L x W). Paint colors, dimensions and locations will be specified on the task order.	250	SM	
D747	**Paint Pedestrian Crosswalk Markings**	The Contractor shall perform the painting of pedestrian crosswalk markings. The work includes surface preparation and painting. Typical details are shown on contract drawing PLATE # 14. All work shall be performed in accordance with Section 32 17 23.00 20 -"Pavement Markings". Unit of measurement shall be square meters (SM) of actual painted area, as computed by multiplying actual dimensions of paint length, by width, (L x W). Paint colors and locations will be specified on the task order.	200	SM	
D748	**Paint Reflective Pedestrian Crosswalk Markings**	The Contractor shall perform the painting of reflective pedestrian crosswalk markings. The work includes surface preparation and painting. Typical details are shown on contract drawing PLATE # 14. All work shall be performed in accordance with Section 32 17 23.00 20 -"Pavement Markings". Unit of measurement shall be square meters (SM) of actual painted area, as computed by multiplying actual dimensions of paint length, by width, (L x W). Paint colors and locations will be specified on the task order.	200	SM	
D749	**Paint Stop Markings**	The Contractor shall perform the painting of stop markings. The work includes surface preparation and painting. Typical details are shown on contract drawing PLATE # 14. All work shall be performed in accordance with Section 32 17 23.00 20 -"Pavement Markings". Unit of measurement shall be square meters (SM) of actual painted area, as computed by multiplying actual dimensions of paint length, by width, (L x W). Paint colors and locations will be specified on the task order.	40	SM	

ELIN	SHORT DESCRIPTION	FULL DESCRIPTION	EST QTY	UNIT OF ISSUE	UNIT PRICE (USD)
D750	**Paint Reflective Stop Markings**	The Contractor shall perform the painting of reflective stop markings. The work includes surface preparation and painting. Typical details are shown on contract drawing PLATE # 14. All work shall be performed in accordance with Section 32 17 23.00 20-"Pavement Markings". Unit of measurement shall be square meters (SM) of actual painted area, as computed by multiplying actual dimensions of paint length, by width, (L x W). Paint colors and locations will be specified on the task order.	40	SM	
D751	**Paint Yield Markings**	The Contractor shall perform the painting of yield markings. The work includes surface preparation and painting. Typical details are shown on contract drawing PLATE # 15. All work shall be performed in accordance with Section 32 17 23.00 20 -"Pavement Markings". Unit of measurement shall be Each (EA). Paint colors and locations will be specified on the task order.	13	EA	
D752	**Paint Reflective Yield Markings**	The Contractor shall perform the painting of yield markings. The work includes surface preparation and painting. Typical details are shown on contract drawing PLATE # 15. All work shall be performed in accordance with Section 32 17 23.00 20 -"Pavement Markings". Unit of measurement shall be Each (EA). Paint colors and locations will be specified on the task order.	13	EA	
D753	**Paint Direction Arrows Markings**	The Contractor shall perform the painting of directional arrow markings. The work includes surface preparation and painting. Typical details are shown on contract drawing PLATE # 15. All work shall be performed in accordance with Section 32 17 23.00 20 -"Pavement Markings". Unit of measurement shall be EA (EA). Paint colors and locations will be specified on the task order. Unit of measurement shall be Each (EA). Paint colors and locations will be specified on the task order.	25	EA	
D754	**Paint Reflective Direction Arrows Markings**	The Contractor shall perform the painting of reflective directional arrow markings. The work includes surface preparation and painting. Typical details are shown on contract drawing PLATE # 15. All work shall be performed in accordance with Section 32 17 23.00 20 -"Pavement Markings". Unit of measurement shall be Each (EA). Paint colors and locations will be specified on the task order.	13	EA	
D755	**Paint Special Markings**	The Contractor shall perform the painting of special pavement markings, such as but not limited to, handicap parking symbols and "NO PARKING" letters. The work includes surface preparation and painting. Typical details are shown on contract drawing PLATE # 14. All work shall be performed in accordance with Section 32 17 23.00 20 -"Pavement Markings". Unit of measurement shall be square meters (SM) of actual painted area, as computed by multiplying actual dimensions of paint area length, by width, (L x W). Paint colors and locations will be specified on the task order.	25	SM	
D756	**Pavement Traffic Road Reflectors**	The Contractor shall perform the installation of pavement traffic reflectors. The work includes supply, delivery, surface preparation and installation. All work shall be performed in accordance with Section 32 17 23.00 20 - "Pavement Markings". Unit of measurement shall be Each (EA). Reflector colors and locations will be specified on the task order.	25	EA	

ELIN	SHORT DESCRIPTION	FULL DESCRIPTION	EST QTY	UNIT OF ISSUE	UNIT PRICE (USD)
D757	**Pavement Striping**	The Contractor shall perform the re-striping of existing striped roads and to stripe newly paved or otherwise un-striped roads, in accordance with the Spanish law and PG-3. The work shall include all types of solid and reflective striping and pavement marking of all types, including but not limited to: obliteration of existing road markings, solid and broken striping center and lateral striping, pavement traffic reflectors, all pavement edge markings, turning radius markings, pedestrian crosswalk markings, directional arrows, stop or yield pavement markings, and any special markings required. Typical details are shown on contract drawing PLATE #'S 14, & 15. All work shall be performed in accordance with Section 32 17 23.00 20 -"Pavement Markings". Unit of measurement shall be kilometer (KM) of painted area. Paint colors, dimensions and locations will be specified on the task order.	35	KM	
D758	**Parking Lot Striping**	The Contractor shall perform the re-striping of existing striped parking lots same as existing and to stripe newly paved or otherwise un-striped parking areas. The work shall include all types of solid and reflective striping and pavement marking of all types, including but not limited to: obliteration of existing markings, solid and broken striping, pavement traffic reflectors, all pavement edge makings, turning radius markings, pedestrian crosswalk markings, directional arrows, stop or yield pavement markings, any special markings required, and concrete wheel stops and curbs. Typical details are shown on contract drawing PLATE #'S 14, & 15. All work shall be performed in accordance with Section 32 17 23.00 20-"Pavement Markings". Unit of measurement shall be square meter (SM) of painted area. Paint colors, dimensions and locations will be specified on the task order.	37,500	SM	
D759	**Reinforced Sidewalks Construction**	The Contractor shall perform the construction of 10 cm thick reinforced concrete sidewalks. The work includes site preparation, construction and installation of forms, placement of WWF steel, concrete placement, installation of vapor barrier, installation of expansion joints and control joints, and finish. Typical details are shown on contract drawing PLATE #18. All work shall be performed in accordance with Section 03 33 00-"Cast-In-Place Architectural Concrete". Unit of measurement shall be square meter (SM), as computed by multiplying, in meters, area length, by width, (L x W). Dimensions will be specified on the task order. Work ordered under this ELIN may be in conjunction with work ordered under ELINS # A712 and #A734.	1,500	SM	
D760	**Concrete Wheel Stops**	The Contractor shall provide and install concrete wheel stops. The work includes fabrication and installation of concrete wheel stops. Typical wheel stop construction detail is shown on contract drawing PLATE # 16. All work shall be performed in accordance with Section 03 33 00 -"Cast-In-Place Architectural Concrete". Unit of measurement shall be each (EA). Units and locations will be specified on the task order.	50	EA	
D761	**Clean Culverts**	The Contractor shall clean culverts. The work includes removing dirt, debris and foreign matter that obstructs the interior of the culvert pipe. All work shall be performed in accordance with section 01 57 19.00 20 - "Temporary Environmental Controls". Unit of measurement shall be linear meters (LM). Units and locations will be specified on the task order.	100	LM	

ELIN	SHORT DESCRIPTION	FULL DESCRIPTION	EST QTY	UNIT OF ISSUE	UNIT PRICE (USD)
D762	**Clean Storm Drainage Channels**	The Contractor shall clean storm drainage channels. The work includes removing dirt, debris and foreign matter that obstructs the drainage channel. All work shall be performed in accordance with section 01 57 19.00 20 -"Temporary Environmental Controls". Unit of measurement shall be linear meters (LM). Units and locations will be specified on the task order.	2,500	LM	
D763	**Install Pre-Cast Concrete Curbs**	The Contractor shall provide and install pre-cast concrete curbs. The work includes excavation, lean concrete and placement of pre-cast concrete curbs. Typical detail of pre-cast concrete curb installation is shown on contract drawing PLATE # 17. All work shall be performed in accordance with Section 03 33 00-"Cast-in-Place Architectural Concrete". Unit of measurement shall be linear meters (LM). Units and locations will be specified on the task order.	100	LM	
D764	**Replace Frame and Cover on Existing Utilities**	The Contractor shall replace frame and cover on existing utilities. The work includes removal and disposal of old frame and cover, and providing and installation of new frame and cover to new grade. All work shall be performed in accordance with Section 05 50 00 -"Metal Miscellaneous and Fabrications". Unit of measurement shall be each (EA).	10	EA	
D765	**Install Guard Posts**	The Contractor shall install guard posts. The work includes site preparation, providing steel pipe, internal armoring and anchorage of post with concrete solidly and paint stripes. Typical guard post installation detail is shown on contract drawing PLATE # 16. All work shall be performed in accordance with Sections 05 50 00 -"Metal Miscellaneous and Fabrications" and 03 33 00 -"Cast-in-Place Architectural Concrete". Unit of measurement shall be each (EA).	25	EA	
D766	**Topographical Surveying**	The Contractor shall perform topographical surveying at the job site in the area indicated. The work includes establishing benchmark of elevations and stake out the new grade spots elevation. The survey shall be made with elevations data, mean sea level at Alicante for maintenance and repair works. Should the works are for new construction, the survey shall be made with elevations data, mean sea level at Alicante and U.T.M coordinates which will be provided by the Government. All survey data shall be produced and submitted on AUTOCAD software, latest version. The Contractor shall submit all survey data to the Contracting Officer for approval. Submit all CAD files for the final drawings on CD ROM disks. Scan all files submitted for viruses using the latest version of a commercial scanning program. Unit of measurement shall be square meters (SM), as computed by multiplying, in meters, area length, by width, (L x W).	25,300	SM	

ELIN	SHORT DESCRIPTION	FULL DESCRIPTION	EST QTY	UNIT OF ISSUE	UNIT PRICE (USD)
D767	**Site Plan Layout**	The Contractor shall perform and provide detailed drawings for exact sizes, exact numbers and detailed positioning of items and final as-built drawings that shall clearly depict the technical design of the facility. Drawings shall be in sufficient detail to show compliance with the contract requirements. All work shall be performed in accordance with Computer Aided Design and Drafting Policy. Drawings shall meet the applicable drawing standards specified in the Guide for Architect Engineer Firms available on the website for Atlantic Division, Naval Facilities Engineering Command. All drawings submitted for review shall be in D size, 24 inch x 36 inch, approximately 61 cm x 91 cm. Other drawing size may be used, if approved by the Contracting Officer. Use Naval Station Rota, Public Works Department Title Block. Unit of measurement shall be each (EA).	10	EA	
D768	**Emergency Repairs Asphalt Pot Holes**	The Contractor shall perform emergency repairs to asphalt potholes within the limits threshold of 1sm per hole. Emergency repairs shall be responded within 4 hours of the Government notification during Government regular working hours. If the emergency repair exceed the threshold the Contractor shall provide a Cost Proposal. The work includes removal of all loose debris, broken pieces of pavement and dust. Fill pothole with ready-to-use bituminous polymer modified cold asphalt and spread with rake or shovel and compact cold asphalt with manual roller or tamper to just over the level of the existing pavement. Thickness and application in layers of the bituminous cold asphalt shall be done as recommended by the manufacturer. Cold asphalt patching material shall comply with "Cold Asphalt Specifications"	10	EA	
D800	**Removal of Corrugated and Pre-Formed Metal Sheet Roofing.**	The Contractor shall perform the removal of existing corrugated and pre-formed metal sheet roofing. All rubbish, debris and loose material resulting from removal of corrugated and pre-formed metal sheet roofing shall be removed from the limits of the Naval Station daily. All work shall be performed in accordance with Sections 01 57 19.00 20 & 02 41 00 Unit of measurement shall be square meters (SM), as computed by multiplying, in meters, area length by width (L x W) , including all overlaps, overhangs, around roofing equipment/vents. Vertical walls and general obstructions 30.48 cm. (one foot) and under and all vertical walls over 30.48 cm (one foot) should be added to the square meter total. Dimensions and locations will be specified on the task order.	400	SM	
D801	**Removal of Corrugated and Pre-Formed Metal Roofing Ridge.**	The Contractor shall perform the removal of existing corrugated and pre-formed metal roofing ridge. All rubbish, debris and loose material resulting from removal of corrugated and pre-formed metal roofing ridge shall be removed from limits of the Naval Station daily. All work shall be performed in accordance with Sections 01 57 19.00 20 & 02 41 00 Unit of measurement shall be linear meters (LM) of removed roof ridge. Dimensions and locations will be specified on the task order.	60	LM	

ELIN	SHORT DESCRIPTION	FULL DESCRIPTION	EST QTY	UNIT OF ISSUE	UNIT PRICE (USD)
D802	**Removal of Corrugated Cement-Asbestos Sheet Roofing.**	The Contractor shall perform the removal of existing cement-asbestos sheet roofing. All rubbish, debris and loose material resulting from removal of cement-asbestos sheet roofing shall be removed from limits of the Naval Station daily. All work shall be performed in accordance with Sections 01 57 19.00 20, 02 41 00 & 02 82 14.00 10 Unit of measurement shall be square meters (SM), as computed by multiplying, in meters, area length by width (L x W) , including all overlaps, overhangs, around roofing equipment/vents. Vertical walls and general obstructions 30.48 cm. (one foot) and under and all vertical walls over 30.48 cm (one foot) should be added to the square meter total. Dimensions and locations will be specified on the task order.	1,000	SM	
D803	**Removal of Corrugated Plastic Sheet Roofing.**	The Contractor shall perform the removal of existing corrugated plastic sheet roofing. All rubbish, debris and loose material resulting from removal of corrugated plastic sheet roofing shall be removed from limits of the Naval Station daily. All work shall be performed in accordance with Sections 01 57 19.00 20 & 02 41 00 Unit of measurement shall be square meters (SM), as computed by multiplying, in meters, area length by width (L x W) , including all overlaps, overhangs, around roofing equipment/vents. Vertical walls and general obstructions 30.48 cm. (one foot) and under and all vertical walls over 30.48 cm (one foot) should be added to the square meter total. Dimensions and locations will be specified on the task order.	100	SM	
D804	**Removal of Gravel Surfaced Bituminous Built-Up Roofing.**	The Contractor shall perform the removal of existing gravel surfaced bituminous built-up roofing. Work includes removal of existing loose gravel. All debris and loose material resulting from removal of gravel surfaced bituminous built-up roofing shall be removed from limits of the Naval Station daily. All work shall be performed in accordance with Sections 01 57 19.00 20 & 02 41 00 Unit of measurement shall be square meters (SM), as computed by multiplying, in meters, area length by width (L x W) , including all overlaps, overhangs, around roofing equipment/vents. Vertical walls and general obstructions 30.48 cm. (one foot) and under and all vertical walls over 30.48 cm (one foot) should be added to the square meter total. Dimensions and locations will be specified on the task order.	250	SM	
D805	**Removal of Polymeric Asphalt Sheet Roofing.**	The Contractor shall perform the removal of existing polymeric asphalt sheet roofing. All debris and loose material resulting from removal of polymeric asphalt sheet roofing shall be removed from limits of the Naval Station daily. All work shall be performed in accordance with Sections 01 57 19.00 20 & 02 41 00 Unit of measurement shall be square meters (SM), as computed by multiplying, in meters, area length by width (L x W) , including all overlaps, overhangs, around roofing equipment/vents. Vertical walls and general obstructions 30.48 cm. (one foot) and under and all vertical walls over 30.48 cm (one foot) should be added to the square meter total. Dimensions and locations will be specified on the task order.	2,000	SM	

ELIN	SHORT DESCRIPTION	FULL DESCRIPTION	EST QTY	UNIT OF ISSUE	UNIT PRICE (USD)
D806	**Removal of Inverted Insulated Roofing.**	The Contractor shall perform the removal of existing inverted insulated roofing. Includes removal of existing loose gravel ballast, insulation and all polymeric asphalt sheet roofing membranes, where applicable. All debris and loose material resulting from removal of inverted insulated roofing shall be removed from limits of the Naval Station daily. All work shall be performed in accordance with Sections 01 57 19.00 20 & 02 41 00 Unit of measurement shall be square meters (SM), as computed by multiplying, in meters, area length by width (L x W) , including all overlaps, overhangs, around roofing equipment/vents. Vertical walls and general obstructions 30.48 cm. (one foot) and under and all vertical walls over 30.48 cm (one foot) should be added to the square meter total. Dimensions and locations will be specified on the task order.	600	SM	
D807	**Removal of Loose Gravel Ballast.**	The Contractor shall perform the removal of existing loose gravel ballast from gravel surfaced bituminous built-up and inverted insulated roofing. All debris and loose material resulting from removal of loose gravel ballast shall be removed from limits of the Naval Station daily. All work shall be performed in accordance with Sections 01 57 19.00 20 & 02 41 00 Unit of measurement shall be square meters (SM), as computed by multiplying, in meters, area length by width (L x W) , including all overlaps, overhangs, around roofing equipment/vents. Vertical walls and general obstructions 30.48 cm. (one foot) and under and all vertical walls over 30.48 cm (one foot) should be added to the square meter total. Dimensions and locations will be specified on the task order.	200	SM	
D808	**Removal of Curved Arabic Tile Roofing.**	The Contractor shall perform the removal of existing curved Arabic tile roofing. All debris and loose material resulting from the removal of the curved Arabic tile roofing shall be removed from limits of the Naval Station daily. All work shall be performed in accordance with Sections 01 57 19.00 20 & 02 41 00 Unit of measurement shall be square meters (SM), as computed by multiplying, in meters, area length by width (L x W) , including all overlaps, overhangs, around roofing equipment/vents. Vertical walls and general obstructions 30.48 cm. (one foot) and under and all vertical walls over 30.48 cm (one foot) should be added to the square meter total. Dimensions and locations will be specified on the task order.	200	SM	
D809	**Removal of Rain Gutters and Down Spouts.**	The Contractor shall perform the removal of existing roof gutters and down spouts. Work includes removal of all gutter and/or down spout hangers and fasteners. All debris and loose material resulting from removal of gutters and down spouts shall be removed from limits of the Naval Station daily. All work shall be performed in accordance with Sections 01 57 19.00 20 & 02 41 00 Unit of measurement shall be linear meters (LM) of removed roof gutters and/or down spouts. Dimensions and locations will be specified on the task order.	400	LM	

ELIN	SHORT DESCRIPTION	FULL DESCRIPTION	EST QTY	UNIT OF ISSUE	UNIT PRICE (USD)
D810	**Removal of Polyurethane Foam Roof.**	The Contractor shall perform the removal of existing polyurethane foam roof. All debris and loose material resulting from the removal of existing polyurethane foam roof shall be removed from limits of the Naval Station daily. All work shall be performed in accordance with Sections 01 57 19.00 20 & 02 41 00 Unit of measurement shall be square meters (SM), as computed by multiplying, in meters, area length by width (L x W) , including all overlaps, overhangs, around roofing equipment/vents. Vertical walls and general obstructions 30.48 cm. (one foot) and under and all vertical walls over 30.48 cm (one foot) should be added to the square meter total. Dimensions and locations will be specified on the task order.	1,000	SM	
D811	**Installation of Corrugated Metal Sheet Roofing.**	The Contractor shall perform the installation of corrugated metal sheet roofing. The work includes surface preparation, supply, delivery and installation of corrugated metal sheet roof, all as necessary so as to provide for a complete and functional roofing system. Where applicable, installed corrugated metal sheet roofing shall match existing and adjacent roofing in shape, size and profile. Typical details are shown on contract drawing PLATES #'s 1, 3 & 11. All work shall be performed in accordance with Section 07 41 13 . Unit of measurement shall be square meters (SM), as computed by multiplying, in meters, area length by width (L x W) , including all overlaps, overhangs, around roofing equipment/vents. Vertical walls and general obstructions 30.48 cm. (one foot) and under and all vertical walls over 30.48 cm (one foot) should be added to the square meter total. Dimensions and locations will be specified on the task order.	1,000	SM	
D812	**Installation of Corrugated Sandwich Metal Sheet Roofing.**	The Contractor shall perform the installation of corrugated sandwich metal sheet roofing. The work includes surface preparation, supply, delivery and installation of corrugated sandwich metal sheet roof, all as necessary so as to provide for a complete and functional roofing system. Where applicable, installed corrugated sandwich metal sheet roofing shall match existing and adjacent roofing in shape, size and profile. All work shall be performed in accordance with Section 07 41 13. Unit of measurement shall be square meters (SM), as computed by multiplying, in meters, area length by width (L x W) , including all overlaps, overhangs, around roofing equipment/vents. Vertical walls and general obstructions 30.48 cm. (one foot) and under and all vertical walls over 30.48 cm (one foot) should be added to the square meter total. Dimensions and locations will be specified on the task order.	1,000	SM	
D813	**Installation of Corrugated Metal Sheet Roofing Ridge.**	The Contractor shall perform the installation of corrugated metal sheet roofing ridge. The work includes surface preparation, supply, task and installation of corrugated metal sheet roof ridge, all as necessary so as to provide for a complete and functional roofing system. Where applicable, installed corrugated metal sheet roofing ridge shall match existing and adjacent roofing ridge in shape, size and profile. Typical details are shown on contract drawing PLATES #'s 1, 3 & 11. All work shall be performed in accordance with Section 07 41 13. Unit of measurement shall be linear meters (LM) of installed corrugated metal sheet roofing ridge. Dimensions and locations will be specified on the task order.	30	LM	

ELIN	SHORT DESCRIPTION	FULL DESCRIPTION	EST QTY	UNIT OF ISSUE	UNIT PRICE (USD)
D814	**Installation of Pre-Formed Metal Sheet Roofing.**	The Contractor shall perform the installation of pre-formed metal sheet roofing. The work includes surface preparation, supply, delivery and installation of pre-formed metal sheet roof, all as necessary so as to provide for a complete and functional roofing system. Where applicable, installed pre-formed metal sheet roofing shall match existing and adjacent roofing in shape, size and profile. Typical details are shown on contract drawing PLATES #'s 1, 3 & 11. All work shall be performed in accordance with Section 07 41 13. Unit of measurement shall be square meters (SM), as computed by multiplying, in meters, area length by width (L x W) , including all overlaps, overhangs, around roofing equipment/vents. Vertical walls and general obstructions 30.48 cm. (one foot) and under and all vertical walls over 30.48 cm (one foot) should be added to the square meter total. Dimensions and locations will be specified on the task order.	200	SM	
D815	**Installation of Pre-Formed Metal Sheet Roofing Ridge.**	The Contractor shall perform the installation of pre-formed metal sheet roofing ridge. The work includes surface preparation, supply, task and installation of pre-formed metal sheet roof ridge, all as necessary so as to provide for a complete and functional roofing system. Where applicable, installed pre-formed metal sheet roofing ridge shall match existing and adjacent roofing ridge in shape, size and profile. Typical details are shown on contract drawing PLATES #'s 1, 3 & 11. All work shall be performed in accordance with Section 07 41 13. Unit of measurement shall be linear meters (LM) of installed pre-formed metal sheet roofing ridge. Dimensions and locations will be specified on the task order.	30	LM	
D816	**Installation of Pre-Formed Sandwich Metal Sheet Roofing.**	The Contractor shall perform the installation of pre-formed sandwich metal sheet roofing. The work includes surface preparation, supply, delivery and installation of pre-formed sandwich metal sheet roof, all as necessary so as to provide for a complete and functional roofing system. Where applicable, installed pre-formed sandwich metal sheet roofing shall match existing and adjacent roofing in shape, size and profile. All work shall be performed in accordance with Section 07 41 13. Unit of measurement shall be square meters (SM), as computed by multiplying, in meters, area length by width (L x W) , including all overlaps, overhangs, around roofing equipment/vents. Vertical walls and general obstructions 30.48 cm. (one foot) and under and all vertical walls over 30.48 cm (one foot) should be added to the square meter total. Dimensions and locations will be specified on the task order.	200	SM	
D817	**Re-Sealing of Pre-Formed and Corrugated Metal Sheet Roofing Joints and Overlaps.**	The Contractor shall perform the re-sealing of pre-formed and corrugated metal sheet roofing joints and overlaps with a silicone-rubber base mastic caulking. Existing joint and/or overlap caulking shall be completely removed and the surface area to receive new caulking shall be thoroughly cleaned and prepared. Typical details are shown on contract drawing PLATES #'s 1, 3 & 11. All work shall be performed in accordance with Sections 07 41 13 & 07 92 00. Unit of measurement shall be linear meters (LM) of re-sealed pre-formed and/or corrugated metal sheet roofing joints and/or overlaps. Dimensions and locations will be specified on the task order.	200	LM	

ELIN	SHORT DESCRIPTION	FULL DESCRIPTION	EST QTY	UNIT OF ISSUE	UNIT PRICE (USD)
D818	**Re-Sealing of Pre-Formed and Corrugated Metal Sheet Roofing Fasteners.**	The Contractor shall perform the re-sealing of pre-formed and corrugated metal sheet roofing fasteners with a silicone-rubber base mastic caulking. Existing fasteners caulking shall be completely removed and the surface area to receive new caulking shall be thoroughly cleaned and prepared. Typical details are shown on contract drawing PLATES #'s 1, 3 & 11. All work shall be performed in accordance with Sections 07 41 13 & 07 92 00. Unit of measurement shall be each (EA) re-sealed pre-formed and/or corrugated metal sheet roofing fastener. Quantities and locations will be specified on the task order.	200	EA	
D819	**Waterproofing of union between Pre-Formed and Corrugated Metal Sheet Roofing and Vertical walls.**	The Contractor shall perform the waterproofing of the union between pre-formed and corrugated metal sheet roofing with vertical surfaces by means of Styrene Butadiene Styrene (SBS) modified membrane. Where applicable, existing aluminum finished polymeric asphalt sheets or Styrene Butadiene Styrene (SBS) modified membrane shall be removed and the surface area to receive new Butadiene Styrene (SBS) modified membrane shall be thoroughly cleaned and prepared. Typical details are shown on contract drawing PLATES #'s 1, 3 & 11. All work shall be performed in accordance with Section 07 52 00 and 07 41 13. Unit of measurement shall be linear meters (LM) of installed polymeric asphalt sheet roofing at vertical junctions. Dimensions and locations will be specified on the task order.	50	LM	
D820	**Installation of Corrugated Plastic Sheet Roofing.**	The Contractor shall perform the installation of corrugated plastic sheet roofing. The work , including surface preparation, supply, delivery and installation of corrugated plastic sheet roof, all as necessary so as to provide for a complete and functional roofing system. Where applicable, installed corrugated plastic sheet roofing shall match existing and adjacent roofing in shape, size, color and profile. Typical details are shown on contract drawing PLATE # 1, 3 & 11. All work shall be performed in accordance with Section 07 54 19. Unit of measurement shall be square meters (SM), as computed by multiplying, in meters, area length by width (L x W) , including all overlaps, overhangs, around roofing equipment/vents. Vertical walls and general obstructions 30.48 cm. (one foot) and under and all vertical walls over 30.48 cm (one foot) should be added to the square meter total. Dimensions and locations will be specified on the task order.	100	SM	
D821	**Installation of Corrugated Plastic Sheet Roofing Ridges.**	The Contractor shall perform the installation of corrugated plastic sheet roofing ridges. The work includes surface preparation, supply and installation of corrugated plastic sheet roofing ridges, all as necessary so as to provide for a complete and functional roofing system. Where applicable, installed corrugated plastic sheet roofing ridges shall match existing and adjacent roofing ridges in shape, size, color and profile. Typical details are shown on contract drawing PLATES #'s 1, 3 & 11. All work shall be performed in accordance with Section 07 54 19. Unit of measurement shall be linear meters (LM) installed corrugated plastic sheet roofing ridges. Dimensions and locations will be specified on the task order.	100	LM	

ELIN	SHORT DESCRIPTION	FULL DESCRIPTION	EST QTY	UNIT OF ISSUE	UNIT PRICE (USD)
D822	**Re-Sealing of Corrugated Plastic Sheet Roofing Joints and Overlaps.**	The Contractor shall perform the re-sealing of corrugated plastic sheet roofing joints and overlaps with a silicone-rubber base mastic caulking. Existing joint and/or overlap caulking shall be completely removed and the surface area to receive new caulking shall be thoroughly cleaned and prepared. Typical details are shown on contract drawing PLATES #'s 1, 3 & 11. All work shall be performed in accordance with Sections 07 54 19 & 07 92 00. Unit of measurement shall be linear meters (LM) of re-sealed corrugated plastic sheet roofing joints and/or overlaps. Dimensions and locations will be specified on the task order.	200	LM	
D823	**Re-Sealing of Corrugated Plastic Sheet Roofing Fasteners.**	The Contractor shall perform the re-sealing of corrugated plastic sheet roofing fasteners with a silicone-rubber base mastic caulking. Existing fasteners caulking shall be completely removed and the surface area to receive new caulking shall be thoroughly cleaned and prepared. Typical details are shown on contract drawing PLATES #'s 1, 3 & 11. All work shall be performed in accordance with Sections 07 54 19 & 07 92 00. Unit of measurement shall be each (EA) re-sealed corrugated plastic sheet roofing fastener. Quantities and locations will be specified on the task order.	200	EA	
D824	**Waterproofing of union between Corrugated plastic Sheet Roofing and Vertical walls.**	The Contractor shall perform the waterproofing of the union between corrugated plastic sheet roofing with vertical surfaces by means of Styrene Butadiene Styrene (SBS) modified membrane. Where applicable, existing aluminum finished polymeric asphalt sheets or Styrene Butadiene Styrene (SBS) modified membrane shall be removed and the surface area to receive new Butadiene Styrene (SBS) modified membrane shall be thoroughly cleaned and prepared. Typical details are shown on contract drawing PLATES #'s 1, 3 & 11. All work shall be performed in accordance with Sections 07 52 00 and 07 54 19. Unit of measurement shall be linear meters (LM) of installed polymeric asphalt sheet roofing at vertical junctions. Dimensions and locations will be specified on the task order.	100	LM	
D825	**Installation of Styrene Butadiene Styrene (SBS) Modified Bituminous membrene roofing on Existing "Sevillana" Tile Roofs.**	The Contractor shall perform the installation of Styrene Butadiene Styrene (SBS) Modified Bituminous membrane roofing on existing "Sevillana" roofing. The work includes surface preparation, supply, delivery and installation of Styrene Butadiene Styrene (SBS) Modified Bituminous membrane roofing on existing "Sevillana" tile roofing, all as necessary so as to provide for a complete and functional roofing system. Installation of crickets at junction of deck and vertical surfaces shall be ordered separately under ELIN A807. Typical details are shown on contract drawing PLATES #'s 4, 8, 9, 12, 14, 15 & 16. All work shall be performed in accordance with Section 07 52 00. Unit of measurement shall be square meters (SM), as computed by multiplying, in meters, area length by width (L x W) , including all overlaps, overhangs, around roofing equipment/vents. Dimensions and locations will be specified on the task order.	200	SM	

ELIN	SHORT DESCRIPTION	FULL DESCRIPTION	EST QTY	UNIT OF ISSUE	UNIT PRICE (USD)
D826	**Installation of Styrene Butadiene Styrene (SBS) Modified Bituminous membrane Roofing on Concrete Roof Decks.**	The Contractor shall perform the installation of styrene butadiene styrene (SBS) modified bituminous membrane roofing on concrete roof decks. The work includes surface preparation, supply, delivery and installation of Styrene Butadiene Sstyrene (SBS) modified bituminous membrane roofing on concrete roof decks, all as necessary so as to provide for a complete and functional roofing system. Installation of crickets at junction of deck and vertical surfaces shall be ordered separately under ELIN A807. Typical details are shown on contract drawing PLATES #'s 4, 8, 9, 12, 14, 15 & 16. All work shall be performed in accordance with Section 07 52 00. Unit of measurement shall be square meters (SM), as computed by multiplying, in meters, area length by width (L x W) , including all overlaps, overhangs, around roofing equipment/vents. Dimensions and locations will be specified on the task order.	10,000	SM	
D827	**Installation of Insulated Concrete Roofing Systems.**	The Contractor shall perform the installation of insulated concrete roofing systems. Work includes installation of insulation, sloped cellular concrete and Styrene Butadiene Styrene (SBS) modified bituminous membrane plies, all as necessary so as to provide for a complete and functional roofing system. Averaged thickness of cellular concrete shall not exceed 10 cm. Typical details are shown on contract drawing PLATES #'s 4, 8, 9, 12, 13, 14, 15 & 16. All work shall be performed in accordance with Sections 03 52 00 and 07 52 00. Unit of measurement shall be square meters (SM), as computed by multiplying, in meters, area length by width (L x W) , including all overlaps, overhangs, around roofing equipment/vents. Vertical walls and general obstructions 30.48 cm. (one foot) and under and all vertical walls over 30.48 cm (one foot) should be added to the square meter total. Dimensions and locations will be specified on the task order.	500	SM	
D828	**Installation of Curved Arabic Tile Roofing.**	The Contractor shall perform the installation of curved Arabic tile roofing. The work includes surface preparation, supply, delivery and installation of curved Arabic tile roofing, all as necessary so as to provide for a complete and functional roofing system. Where applicable, installed curved Arabic tile roofing shall match existing and adjacent roofing in shape, size, color and profile. Typical details are shown on contract drawing PLATES #'s 5, 6 & 7. All work shall be performed in accordance with Section 07 32 13. Unit of measurement shall be square meters (SM), as computed by multiplying, in meters, area length by width (L x W) , including all overlaps, overhangs, around roofing equipment/vents. Vertical walls and general obstructions 30.48 cm. (one foot) and under and all vertical walls over 30.48 cm (one foot) should be added to the square meter total. Dimensions and locations will be specified on the task order.	200	SM	

ELIN	SHORT DESCRIPTION	FULL DESCRIPTION	EST QTY	UNIT OF ISSUE	UNIT PRICE (USD)
D829	**Installation of Curved Arabic Tile Roofing Ridges**	The Contractor shall perform the installation of curved Arabic tile roofing ridges. The work includes surface preparation, supply, task and installation of curved Arabic tile roofing ridges, all as necessary so as to provide for a complete and functional roofing system. Where applicable, installed curved Arabic tile roofing ridges shall match existing and adjacent roofing ridge in shape, size, color and profile. Typical details are shown on contract drawing PLATES #'s 5, 6 & 7. All work shall be performed in accordance with Section 07 32 13. Unit of measurement shall be linear meters (LM) installed curved Arabic tile roofing ridges. Dimensions and locations will be specified on the task order.	50	LM	
D830	**Rubber Paint over exiting Curved Arabic Tile Roofing.**	The Contractor shall perform the painting over the existing curved Arabic tile roofing. The work includes surface preparation, supply, delivery and clear rubber painting of curved Arabic tile roofing, all as necessary so as to provide for a complete and functional roofing system. All work shall be performed in accordance with Section 09 90 00. Unit of measurement shall be square meters (SM), as computed by multiplying, in meters, area length by width (L x W) , including all overlaps, overhangs, around roofing equipment/vents. Vertical walls and general obstructions 30.48 cm. (one foot) and under and all vertical walls over 30.48 cm (one foot) should be added to the square meter total. Dimensions and locations will be specified on the task order.	7,500	SM	
D831	**Installation of Sheet Metal Flashing on Aluminum Finished Polymeric (or SBS) Asphalt Sheet Roofing.**	The Contractor shall perform the installation of sheet metal flashing on aluminum finished polymeric (or SBS) asphalt sheet roofing. Typical details are shown on contract drawing PLATE # 4. All work shall be performed in accordance with Section 07 60 00. Unit of measurement shall be square meters (SM), as computed by multiplying, in meters, area length by width (L x W) , including all overlaps, overhangs, around roofing equipment/vents. Vertical walls and general obstructions 30.48 cm. (one foot) and under and all vertical walls over 30.48 cm (one foot) should be added to the square meter total. Dimensions and locations will be specified on the task order.	50	SM	
D832	**Installation of Sheet Metal Flashing on Parapet Copings.**	The Contractor shall perform the installation of sheet metal flashing on parapet copings. Typical details are shown on contract drawing PLATE # 8. All work shall be performed in accordance with Section 07 60 00. Unit of measurement shall be square meters (SM), as computed by multiplying, in meters, area length by width (L x W) , including all overlaps, overhangs, around roofing equipment/vents. Vertical walls and general obstructions 30.48 cm. (one foot) and under and all vertical walls over 30.48 cm (one foot) should be added to the square meter total. Dimensions and locations will be specified on the task order.	100	SM	
D833	**Installation of Sheet Metal Expansion Joint Flashings.**	The Contractor shall perform the installation of sheet metal expansion joint Flashings. Typical details are shown on contract drawing PLATE # 9. All work shall be performed in accordance with Section 07 60 00. Unit of measurement shall be linear meters (LM) of installed sheet metal expansion joint Flashings. Dimensions and locations will be specified on the task order.	100	LM	

ELIN	SHORT DESCRIPTION	FULL DESCRIPTION	EST QTY	UNIT OF ISSUE	UNIT PRICE (USD)
D834	**Installation of Rain Gutters.**	The Contractor shall perform the installation of rain gutters. Work shall include all hangers and fasteners necessary for a complete and functional installation. Typical details are shown on contract drawing PLATE # 11. All work shall be performed in accordance with Section 07 60 00. Unit of measurement shall be linear meters (LM) of installed rain gutters. Dimensions and locations will be specified on the delivery order.	500	LM	
D835	**Installation of Rain Gutters and/or Scupper Down Spouts.**	The Contractor shall perform the installation of rain gutters and/or scupper down spouts. Work shall include all hangers and fasteners necessary for a complete and functional installation. Typical details are shown on contract drawing PLATE # 10. All work shall be performed in accordance with Section 07 60 00. Unit of measurement shall be linear meters (LM) of installed rain gutters and/or scupper down spouts. Dimensions and locations will be specified on the task order.	100	LM	
D836	**Installation of Down Spout Conductor Heads.**	The Contractor shall perform the installation of down spout conductor heads. Typical details are shown on contract drawing PLATE # 10. All work shall be performed in accordance with Section 07 60 00. Unit of measurement shall be each (EA) installed down spout heads. Quantities and locations will be specified on the task order.	25	EA	
D837	**Application of Sprayed Polyurethane Foam (PUF) Roof Coating.**	The Contractor shall perform the application of sprayed polyurethane (PUF) roof coating on existing pre-formed and/or corrugated metal sheet, asbestos-cement, and curved Arabic red tile roofs. Work includes application of sprayed polyurethane and application of elastomeric roof coating. Typical details are shown on contract drawing PLATE # 2. All work shall be performed in accordance with Section 07 57 13. Unit of measurement shall be square meters (SM), as computed by multiplying, in meters, area length by width (L x W) , including all overlaps, overhangs, around roofing equipment/vents. Vertical walls and general obstructions 30.48 cms. (one foot) and under and all vertical walls over 30.48 cms. (one foot) should be added to the square meter total. Dimensions and locations will be specified on the task order.	1,200	SM	
D838	**Re-application of Elastomeric Roof Coating Over Polyurethane Foam (PUF).**	The Contractor shall perform the re-application of elastomeric roof coating over existing polyurethane foam (PUF) roof coating. Work includes removal of insulation which become damaged, overexposed to weather, or contaminated such that they cannot be cleaned and repaired to the satisfaction of the coating applicator, and provide new insulation and re-application of elastomeric roof coating. Typical details are shown on contract drawing PLATE # 2. All work shall be performed in accordance with Section 07 57 13. Unit of measurement shall be square meters (SM), as computed by multiplying, in meters, area length by width (L x W) , including all overlaps, overhangs, around roofing equipment/vents. Vertical walls and general obstructions 30.48 cms. (one foot) and under and all vertical walls over 30.48 cms. (one foot) should be added to the square meter total. Dimensions and locations will be specified on the task order.	8,000	SM	

ELIN	SHORT DESCRIPTION	FULL DESCRIPTION	EST QTY	UNIT OF ISSUE	UNIT PRICE (USD)
D839	**Re-paint Existing Polyurethane Foam.**	The Contractor shall perform the re-application of elastomeric roof coating over existing polyurethane foam coating. Work includes application of elastomeric roof coating over polyurethane foam. Typical details are shown on contract drawing PLATE # 2. All work shall be performed in accordance with Section 07 57 13. Unit of measurement shall be square meters (SM), as computed by multiplying, in meters, area length by width (L x W) , including all overlaps, overhangs, around roofing equipment/vents. Vertical walls and general obstructions 30.48 cm. (one foot) and under and all vertical walls over 30.48 cm (one foot) should be added to the square meter total. Dimensions and locations will be specified on the task order.	8,000	SM	
D840	**Installation of Inverted Insulated Roofing Systems.**	The Contractor shall perform the installation of inverted insulated roofing systems. Work includes installation of polymeric asphalt sheet roofing plies, polystyrene insulation and loose aggregate ballast, all as necessary so as to provide for a complete and functional roofing system. Typical details are shown on contract drawing PLATE # 13. All work shall be performed in accordance with Section 07 55 00. Unit of measurement shall be square meters (SM), as computed by multiplying, in meters, area length by width (L x W) , including all overlaps, overhangs, around roofing equipment/vents. Vertical walls and general obstructions 30.48 cm. (one foot) and under and all vertical walls over 30.48 cm (one foot) should be added to the square meter total. Dimensions and locations will be specified on the task order.	600	SM	
D841	**Installation of Crickets.**	The Contractor shall perform the installation of crickets at junctions of roof deck and vertical surfaces. All work shall be performed in accordance with Sections 03 52 00, 07 55 00 & 07 52 00, as applicable. Unit of measurement shall be linear meters (LM) of installed cricket. Dimensions and locations will be specified on the task order.	100	LM	
D842	**Installation of Expansion Joints.**	The Contractor shall perform the installation of neoprene expansion joints at junctions of roof decks and vertical surfaces. Typical details are shown on contract drawing PLATE # 9. All work shall be performed in accordance with Section 07 60 00. Unit of measurement shall be linear meters (LM) of installed expansion joints. Dimensions and locations will be specified on the task order.	200	LM	
D843	**Re-sealing of Expansion Joints.**	The Contractor shall perform the re-sealing of expansion joints with a silicone-rubber base mastic caulking. Existing joint caulking shall be completely removed and the surface area to receive new caulking shall be thoroughly cleaned and prepared. Typical details are shown on contract drawing PLATE # 9. All work shall be performed in accordance with Sections 07 60 00 & 07 92 00. Unit of measurement shall be linear meters (LM) of re-sealed expansion joint. Dimensions and locations will be specified on the task order.	320	LM	

ELIN	SHORT DESCRIPTION	FULL DESCRIPTION	EST QTY	UNIT OF ISSUE	UNIT PRICE (USD)
D844	**Forming of Slopes With Cellular Concrete.**	The Contractor shall perform the forming of slopes on existing concrete roof decks using cellular concrete. Averaged thickness of cellular concrete shall not exceed 10 cm. . Typical details are shown on contract drawing PLATES #'s 8, 9, 12, 13, 14, 15 & 16. All work shall be performed in accordance with Sections 07 55 00 & 07 52 00. Unit of measurement shall be square meters (SM), as computed by multiplying, in meters, area length by width (L x W) , including all overlaps, overhangs, around roofing equipment/vents. Vertical walls and general obstructions 30.48 cm. (one foot) and under and all vertical walls over 30.48 cm (one foot) should be added to the square meter total. Dimensions and locations will be specified on the task order.	1,000	SM	
D845	**Installation of Roof Mounted Duct and Equipment Supports.**	The Contractor shall perform the installation of roof mounted duct and equipment supports. Typical details are shown on contract drawing PLATE # 15. All work shall be performed in accordance with Section 07 60 00. Unit of measurement shall be each (EA) installed roof mounted duct and/or equipment supports. Quantities and locations will be specified on the task order.	10	EA	
D846	**Replacement of Drain Sumps and Strainers.**	The Contractor shall perform the replacement of existing drain sumps and strainers. Work , including demolition of existing concrete roof deck, removal of existing drain sump and strainer, installation of new roof drain sumps and strainers and patching of roof deck. Typical details are shown on contract drawing PLATE # 16. All work shall be performed in accordance with Section 07 60 00. Unit of measurement shall be each (EA) replaced roof drain sump and strainer. Quantities and locations will be specified on the task order.	10	EA	
D847	**Replacement of Pre-Cast Concrete Parapet Copings.**	The Contractor shall perform the replacement of pre-cast concrete parapet copings. Work includes demolition and removal of existing pre-cast concrete parapet roof copings, installation of new pre-cast concrete parapet copings, patching of parapet walls and repainting to match adjacent surfaces. Typical details are shown on contract drawing PLATES #'s 8 & 13. All work shall be performed in accordance with Section 03 31 01.00 10.Unit of measurement shall be linear meters (LM) of replaced pre-cast concrete parapet copings. Dimensions and locations will be specified on the delivery order. Unit of measurement shall be linear meters (LM) of replaced pre-cast concrete parapet copings. Dimensions and locations will be specified on the task order.	50	LM	
D848	**Installation of Pre-Cast Concrete Down Spout Splash Blocks.**	The Contractor shall perform the installation of pre-cast concrete down spout splash blocks. Typical details are shown on contract drawing PLATE # 10 . All work shall be performed in accordance with Section 03 31 01.00 10. Unit of measurement shall be each (EA) installed pre-cast concrete splash block. Quantities and locations will be specified on the task order.	10	EA	
D849	**Installation of Scupper Drains.**	The Contractor shall perform the installation of scupper drains in existing roof parapet walls. Typical details are shown on contract drawing PLATE # 16. All work shall be performed in accordance with Section 07 60 00. Unit of measurement shall be each (EA) installed scupper drain. Quantities and locations will be specified on the task order.	10	EA	

ELIN	SHORT DESCRIPTION	FULL DESCRIPTION	EST QTY	UNIT OF ISSUE	UNIT PRICE (USD)
D850	**Rubber Paint over Existing Roofing.**	The Contractor shall perform the application of rubber paint coating on existing pre-formed and/or corrugated metal sheet, asbestos-cement, concrete, and Ceramic Tiles roofs. Work includes application of rubber paint coating over existing roofing. All work shall be performed in accordance with Section 09 90 00. Unit of measurement shall be square meters (SM), as computed by multiplying, in meters, area length by width (L x W) , including all overlaps, overhangs, around roofing equipment/vents. Vertical walls and general obstructions 30.48 cm. (one foot) and under and all vertical walls over 30.48 cm (one foot) should be added to the square meter total. Dimensions and locations will be specified on the task order.	1,500	SM	
D851	**Emergency repairs for roofing leaks.**	The Contractor shall perform emergency repairs on roofing leaks within the limits threshold of 16 hours of labor and $3,000 of direct material cost. Emergency repairs shall be responded within 4 hours of the Government notification during Government regular working hours. If the emergency repair exceed the threshold contractor shall provide a Cost Proposal. Dimensions and locations will be specified on the task order. Contractor shall protect all the building interior area affected by the roof leak to prevent any damage.	10	EA	
D900	**Exterior Paint extending from the ground level up to 3.75 LM above ground level.**	The Contractor shall prepare the surface and paint in accordance with SECTION 09 90 00 Paints and Coatings, this ELIN includes all the exterior surfaces up to 3.75LM above ground level and comprise all the surfaces included in the paint tables of SECTION 09 90 00. Locations and paint colors will be specified on each the task order or shall match to the existing color. The measurement method is provided in J-1503040-04	10,000	SM	
D901	**Exterior Paint extending from 3.75LM above ground level up to 30LM above ground level.**	The Contractor shall prepare the surface and paint in accordance with SECTION 09 90 00 Paints and Coatings, this ELIN includes all the exterior surfaces from 3.75LM above ground level up to 30LM above ground level, and comprise all the surfaces included in the paint tables of SECTION 09 90 00. Locations and paint colors will be specified on each the task order or shall match to the existing color. The measurement method is provided in J-1503040-04.	20,000	SM	
D902	**Interior Paint extending from the floor level up to 3.75LM above ground level.**	The Contractor shall prepare the surface and paint in accordance with SECTION 09 90 00 Paints and Coatings, this ELIN includes all the interior surfaces up to 3.75LM above floor level and comprise all the surfaces included in the paint tables of SECTION 09 90 00. Locations and paint colors will be specified on each the task order or shall match to the existing color. The measurement method is provided in J-1503040-04.	15,000	SM	
D903	**Interior Paint extending from 3.75LM above floor level up to 30LM above floor level.**	The Contractor shall prepare the surface and paint in accordance with SECTION 09 90 00 Paints and Coatings, this ELIN includes all the interior surfaces up to 3.75LM above floor level and comprise all the surfaces included in the paint tables of SECTION 09 90 00. Locations and paint colors will be specified on each the task order or shall match to the existing color. The measurement method is provided in J-1503040-04.	30,000	SM	
D1000	**Unit Priced Un-Skilled Labor Work (negotiated)**	Includes all labor and supervision required to perform miscellaneous un-skilled work. Unskilled labor includes, but is not limited to the following types of trades: Laborer, Small Equipment Operator, Helper, etc. Dimensions and locations will be specified on the task order.	600	HR	

ELIN	SHORT DESCRIPTION	FULL DESCRIPTION	EST QTY	UNIT OF ISSUE	UNIT PRICE (USD)
D1001	**Miscellaneous Costs (negotiated)**	Includes all materials, equipment, and subcontracted effort required to perform miscellaneous work. Costs for materials, equipment, and subcontractor effort, not covered under any UPT, shall be negotiated as required for each task order. Units, dimensions, and locations will be specified on the task order.	1	LOT	

EXHIBIT LINE ITEM NUMBERS					
SOLICITATION NO. N33191-15-R-XXXX					
PROVIDE UNIT PRICES FOR INDEFINITE DELIVERY INDEFINITE QUANTITY WORK					
ELINs E700 through E1001					
Fourth Period - Indefinite Quantity Work					
ELIN	**SHORT DESCRIPTION**	**FULL DESCRIPTION**	**EST QTY**	**UNIT OF ISSUE**	**UNIT PRICE (USD)**
E700	**Demolition and Removal of Bituminous Asphalt Pavement**	The Contractor shall perform the demolition and removal of existing bituminous asphalt pavement. The asphalt pavement shall be saw cut, to a minimum depth of 10 cm, extending out 30.5 cm beyond the edge of the aggregate base to be removed. All saw cuts shall be made with vertical straight faces making one pair of faces at right angles to traffic flow. Typical details are shown on contract drawing PLATE # 10. Broken pavement, debris and resulting loose material shall be removed from limits of the station daily. All work shall be performed in accordance with Sections 01 57 19.00 20 - "Temporary Environmental Controls" & 02 41 00 - "Demolition". Unit of measurement shall be square meters (SM), as computed by multiplying, in meters, area length by width (L x W). Dimensions and locations will be specified on the task order.	7,500	SM	
E701	**Demolition and Removal of Aggregate Base**	The Contractor shall perform the demolition and removal of existing aggregate to a minimum depth of 20 cm. Typical details will be provided with each task order. Debris and resulting loose material shall be removed from limits of the station daily. All work shall be performed in accordance with Sections 01 57 19.00 20 - "Temporary Environmental Controls" & 02 41 00 - "Demolition". Unit of measurement shall be cubic meters (CM), as computed by multiplying, in meters, area length by width by depth (L x W x D). Dimensions and locations will be specified on the task order.	1,875	CM	
E702	**Removal and Reinstallation or Disposal of Concrete Wheel Stops**	The Contractor shall perform the removal and reinstallation or disposal of existing concrete wheel stops. All work shall be performed in accordance with Sections 01 57 19.00 20 - "Temporary Environmental Controls" & 02 41 00 - "Demolition". Unit of measurement shall be Each (EA). Units and locations will be specified on the task order.	100	EA	
E703	**Demolition and Removal of Concrete Curbs**	The Contractor shall perform the demolition and removal of existing pre-cast concrete curbs. All work shall be performed in accordance with Section 01 57 19.00 20 - "Temporary Environmental Controls" & 02 41 00 - "Demolition". Unit of measurement shall be linear meters (LM). Units and locations will be specified on the task order.	125	LM	
E704	**Demolition and Removal of Storm Drainage Headwalls**	The Contractor shall perform the demolition and removal of existing storm drainage headwalls. Broken concrete, debris and resulting loose material shall be removed from limits of the station daily. All work shall be performed in accordance with Section 01 57 19.00 20 - "Temporary Environmental Controls" & 02 41 00 - "Demolition". Unit of measurement shall be Each (EA). Units and locations will be specified on the task order.	4	EA	
E705	**Demolition and Removal of Concrete Pipe Culverts**	The Contractor shall perform the removal of existing pipe culverts. Old culvert pipe, debris and resulting loose material shall be removed from limits of the station daily. All work shall be performed in accordance with Section 01 57 19.00 20 - "Temporary Environmental Controls" & 02 41 00 - "Demolition". Unit of measurement shall be linear meters (LM). Units and locations will be specified on the task order.	100	LM	

ELIN	SHORT DESCRIPTION	FULL DESCRIPTION	EST QTY	UNIT OF ISSUE	UNIT PRICE (USD)
E706	**Demolition and Removal of Concrete Sidewalks**	The Contractor shall perform demolition and removal of existing concrete sidewalks, all as indicated on the contract task order and site plans (as applicable). Where required and indicated, concrete shall be saw cut. Typical details will be provided with each task order. Broken concrete, debris and resulting loose material shall be removed from limits of the station daily. All work shall be performed in accordance with Sections 01 57 19.00 20-"Temporary Environmental Controls" & 02 41 00-"Demolition". Unit of measurement shall be square meters (SM), as computed by multiplying, in meters, area length by width (L x W) considering an average depth of 0.1m . Dimensions and locations will be specified on the task order.	1,500	SM	
E707	**Cold Milling of Bituminous Asphalt Pavements**	The Contractor shall perform cold milling 6 cm depth on existing bituminous asphalt pavement. All debris and resulting loose milled material shall be removed from limits of the station daily. All work shall be performed in accordance with Sections 32 0116 17 - "Cold Milling". This ELIN# may be ordered in conjunction with work ordered under ELIN's #A735. Unit of measurement shall be square meters (SM), as computed by multiplying, in meters, area length by width (L x W). Dimensions and locations will be specified on the task order.	6,800	SM	
E708	**Earthwork for Construction of Bituminous Asphalt Pavements**	The Contractor shall perform the general earthwork required for the construction of bituminous asphalt paved roads and parking lots. The work includes performing site preparation, excavation, compaction, removal of excess material and grading, all as necessary to construct bituminous asphalt paved roads, and parking lots at the finished grade and elevations indicated. Typical details are shown on contract drawing PLATE #'s 7 & 8. All work shall be performed in accordance with Section 31 23 00.00 20 - "Excavation and Fill". Unit of measurement shall be cubic meters (CM), as computed by multiplying, in meters, area length by width by depth (L x W x D). Dimensions, slopes and finished grade will be specified on the task order.	1,700	CM	
E709	**Earthwork for Storm Sewer Pipe (4 meter max. depth)**	The Contractor shall perform the general excavation required for the installation storm drainage pipe. The work includes performing site preparation, excavation, installation of granular pipe bedding, backfill, compacting, removal of excess material and grading, all as necessary to install storm sewer pipe and other related appurtenances at the finished grade and elevations indicated. Maximum depth shall be 4 meter. Typical details are shown on contract drawing PLATE # 1. All work shall be performed in accordance with Section 31 23 00.00 20 - "Excavation and Fill". Unit of measurement shall be cubic meters (CM), as computed by multiplying, in meters, length by width by depth (L x W x D). Dimensions, slopes and finished grade will be specified on the task order.	150	CM	

ELIN	SHORT DESCRIPTION	FULL DESCRIPTION	EST QTY	UNIT OF ISSUE	UNIT PRICE (USD)
E710	**Earthwork for Storm Sewer Manholes (4 meter max. depth)**	The Contractor shall perform the general excavation required for the construction of storm sewer manholes. The work includes performing site preparation, excavation, backfill, compacting, removal of excess material and grading, all as necessary to install storm sewer manholes at the finished grade and elevations indicated. Maximum depth shall be 4 meter. Typical details are shown on contract drawing PLATE # 2. All work shall be performed in accordance with Section 31 23 00.00 20 - "Excavation and Fill". Unit of measurement shall be cubic meters (CM), as computed by multiplying, in meters, length by width by depth (L x W x D). Dimensions, slopes and finished grade will be specified on the task order.	60	CM	
E711	**Earthwork For Storm Drainage Channels/Reshaping (4 meter max. depth)**	The Contractor shall perform the general excavation required for the construction of storm drainage channels. The work includes performing site preparation, excavation for new channel and reshaping for old channel, backfill, compaction, installation of organic mat, removal of excess material and grading, all as necessary to construct storm drainage channels at the finished grade and elevations indicated. Typical details are shown on contract drawing PLATE # 3. All work shall be performed in accordance with Section 31 23 00.00 20 - "Excavation and Fill". Unit of measurement shall be cubic meters (CM), as computed by multiplying, in meters, length by width by depth (L x W x D). Dimensions, slopes and finished grade will be specified on the task order.	150	CM	
E712	**Earthwork for Construction of Sidewalks**	The Contractor shall perform the general earthwork required for the construction of concrete sidewalks. The work includes performing site preparation, excavation, compaction, and removal of excess material and grading, all as necessary to construct concrete sidewalks at the finished grade and elevations indicated. Typical details are shown on contract drawing PLATE #'18. All work shall be performed in accordance with Section 31 00 00 -"Earthwork". Unit of measurement shall be square meters (SM), as computed by multiplying, in meters, area length by width (L x W) considering an average depth of 0.1m . Dimensions and locations will be specified on the task order.	1,500	SM	
E713	**Concrete Storm Sewer Pipe (Ø20 cm)**	The Contractor shall perform the installation of 20 cm. diameter concrete storm drainage pipe. The work includes providing granular pipe bedding material, concrete storm drainage pipe, fittings and joints at the finished grade and elevations indicated. Typical details are shown on contract drawing PLATE # 1. All work shall be performed in accordance with Sections 31 23 00.00 20 - "Excavation and Fill" and 33 40 01 - "Storm Drainage". Unit of measurement shall be linear meters (LM). Dimensions, slopes and locations will be specified on the task order.	50	LM	
E714	**Concrete Storm Sewer Pipe (Ø30 cm)**	The Contractor shall perform the installation of 30 cm. diameter concrete storm drainage pipe. The work includes providing granular pipe bedding material, concrete storm drainage pipe, fittings and joints at the finished grade and elevations indicated. Typical details are shown on contract drawing PLATE # 1. All work shall be performed in accordance with Sections 31 23 00.00 20 - "Excavation and Fill" and 33 40 01 - "Storm Drainage". Unit of measurement shall be linear meters (LM). Dimensions, slopes and locations will be specified on the task order.	50	LM	

ELIN	SHORT DESCRIPTION	FULL DESCRIPTION	EST QTY	UNIT OF ISSUE	UNIT PRICE (USD)
E715	**Concrete Storm Sewer Pipe (Ø40 cm)**	The Contractor perform the installation of 40 cm. diameter concrete storm drainage pipe. The work includes providing granular pipe bedding material, concrete storm drainage pipe, fittings and joints at the finished grade and elevations indicated. Typical details are shown on contract drawing PLATE # 1. All work shall be performed in accordance with Sections 31 23 00.00 20 - “Excavation and Fill” and 33 40 01 - “Storm Drainage”. Unit of measurement shall be linear meters (LM). Dimensions, slopes and locations will be specified on the task order.	50	LM	
E716	**Concrete Storm Sewer Pipe (Ø50 cm)**	The Contractor shall perform the installation of 50 cm. diameter concrete storm drainage pipe. The work includes providing granular pipe bedding material, concrete storm drainage pipe, fittings and joints at the finished grade and elevations indicated. Typical details are shown on contract drawing PLATE # 1. All work shall be performed in accordance with Sections 31 23 00.00 20 - “Excavation and Fill” and 33 40 01 - “Storm Drainage". Unit of measurement shall be linear meters (LM). Dimensions, slopes and locations will be specified on the task order.	50	LM	
E717	**Concrete Storm Sewer Pipe (Ø60 cm)**	The Contractor shall perform the installation of 60 cm. diameter concrete storm drainage pipe. The work includes providing granular pipe bedding material, concrete storm drainage pipe, fittings and joints at the finished grade and elevations indicated. Typical details are shown on contract drawing PLATE # 1. All work shall be performed in accordance with Sections 31 23 00.00 20 - “Excavation and Fill” and 33 40 01 - “Storm Drainage”. Unit of measurement shall be linear meters (LM). Dimensions, slopes and locations will be specified on the task order.	50	LM	
E718	**PVC Storm Sewer Pipe (Ø12.5 cm)**	The Contractor shall perform the installation of 12.5 cm. diameter PVC storm drainage pipe. The work includes providing granular pipe bedding material, PVC storm drainage pipe, fittings and joints at the finished grade and elevations indicated. Typical details are shown on contract drawing PLATE # 3. All work shall be performed in accordance with Sections 31 23 00.00 20 - “Excavation and Fill” and 33 40 01 - “Storm Drainage”. Unit of measurement shall be linear meters (LM). Dimensions, slopes and locations will be specified on the task order.	50	LM	
E719	**PVC Storm Sewer Pipe (Ø16 cm)**	The Contractor shall perform the installation of 16 cm. diameter PVC storm drainage pipe. The work includes providing granular pipe bedding material, PVC storm drainage pipe, fittings and joints at the finished grade and elevations indicated. Typical details are shown on contract drawing PLATE # 3. All work shall be performed in accordance with Sections 31 23 00.00 20 - “Excavation and Fill” and 33 40 01 - “Storm Drainage”. Unit of measurement shall be linear meters (LM). Dimensions, slopes and locations will be specified on the task order.	50	LM	
E720	**PVC Storm Sewer Pipe (20 cm)**	The Contractor shall perform the installation of 20 cm. diameter PVC storm drainage pipe. The work includes providing granular pipe bedding material, PVC storm drainage pipe, fittings and joints at the finished grade and elevations indicated. Typical details are shown on contract drawing PLATE # 3. All work shall be performed in accordance with Sections 31 23 00.00 20 - “Excavation and Fill” and 33 40 01 - “Storm Drainage”. Unit of measurement shall be linear meters (LM). Dimensions, slopes and locations will be specified on the task order.	50	LM	

ELIN	SHORT DESCRIPTION	FULL DESCRIPTION	EST QTY	UNIT OF ISSUE	UNIT PRICE (USD)
E721	**PVC Storm Sewer Pipe (Ø25 cm)**	The Contractor shall perform the installation of 25 cm. diameter PVC storm drainage pipe. The work includes providing granular pipe bedding material, PVC storm drainage pipe, fittings and joints at the finished grade and elevations indicated. Typical details are shown on contract drawing PLATE # 1. All work shall be performed in accordance with Sections 31 23 00.00 20 - "Excavation and Fill" and 33 40 01 - "Storm Drainage". Unit of measurement shall be linear meters (LM). Dimensions, slopes and locations will be specified on the task order.	50	LM	
E722	**PVC Storm Sewer Pipe (Ø31.5 cm)**	The Contractor shall perform the installation of 31.5 cm. diameter PVC storm drainage pipe. The work includes providing granular pipe bedding material, PVC storm drainage pipe, fittings and joints at the finished grade and elevations indicated. Typical details are shown on contract drawing PLATE # 1. All work shall be performed in accordance with Sections 31 23 00.00 20 - "Excavation and Fill" and 33 40 01 - "Storm Drainage". Unit of measurement shall be linear meters (LM). Dimensions, slopes and locations will be specified on the task order.	50	LM	
E723	**PVC Storm Sewer Pipe (Ø40 cm)**	The Contractor shall perform the installation of 40 cm. diameter PVC storm drainage pipe. The work includes providing granular pipe bedding material, PVC storm drainage pipe, fittings and joints at the finished grade and elevations indicated. Typical details are shown on contract drawing PLATE # 1. All work shall be performed in accordance with Sections 31 23 00.00 20 - "Excavation and Fill" and 33 40 01 - "Storm Drainage". Unit of measurement shall be linear meters (LM). Dimensions, slopes and locations will be specified on the task order.	50	LM	
E724	**Construct Storm Drainage Headwalls**	The Contractor shall perform the construction of reinforced concrete headwalls. The work includes performing site preparation, excavation and /or fill, forming, reinforcement, concrete placement, backfill, compaction, removal of excess material and grading, all as necessary to construct concrete storm drainage headwalls at the finished grades and elevations indicated. Typical details are shown on contract drawing PLATE # 5. All work shall be performed in accordance with Sections 31 23 00.00 20 - "Excavation and Fill", 33 40 01 - "Storm Drainage", and 03 33 00 -"Cast-In-Place Architectural Concrete". Unit of measurement shall be Each (EA). Units and locations will be specified on the task order.	4	EA	
E725	**Install Pre-Cast Storm Sewer Manhole (0 - 1 meter depth)**	The Contractor shall perform the installation of pre-cast concrete storm sewer manholes. The work includes supply, delivery and installation of pre-cast concrete manholes, including manhole base, riser, eccentric cone, frames and covers, as applicable, and connection of pipe, all as necessary for the construction of concrete storm drainage manholes at the finished grades and elevations indicated. Typical details are shown on contract drawing PLATE # 2. All work shall be performed in accordance with Sections 31 23 00.00 20 - "Excavation and Fill", 33 40 01 - "Storm Drainage", 03 33 00 -"Cast-In-Place Architectural Concrete". Unit of measurement shall be EA (EA). Units and locations will be specified on the task order.	5	EA	

ELIN	SHORT DESCRIPTION	FULL DESCRIPTION	EST QTY	UNIT OF ISSUE	UNIT PRICE (USD)
E726	**Install Pre-Cast Storm Sewer Manhole (1 - 3 meter depth)**	The Contractor shall perform the installation of pre-cast concrete storm sewer manholes. The work includes supply, delivery and installation of pre-cast concrete manholes, including manhole base, riser, eccentric cone, frames and covers, as applicable, and connection of pipe, all as necessary for the construction of concrete storm drainage manholes at the finished grades and elevations indicated. Typical details are shown on contract drawing PLATE # 2. All work shall be performed in accordance with Sections 31 23 00.00 20 - "Excavation and Fill", 33 40 01 - "Storm Drainage", 03 33 00 -"Cast-In-Place Architectural Concrete". Unit of measurement shall be Each (EA). Units and locations will be specified on the task order.	5	EA	
E727	**Install Pre-cast Concrete Storm Drainage Catch Basin**	The Contractor shall perform the installation of pre-cast concrete storm drainage catch basins. The work includes excavation, supply, delivery and installation of pre-cast concrete catch basins, including base, riser, frames and grating, as applicable, and connection to piping, all as necessary for the construction of concrete storm drainage catch basins at the finished grades and elevations indicated. Typical details are shown on contract drawing PLATE # 6. All work shall be performed in accordance with Sections 31 23 00.00 20 - "Excavation and Fill", 33 40 01 - "Storm Drainage". Unit of measurement shall be Each (EA). Units and locations will be specified on the task order.	6	EA	
E728	**Construct Brick Storm Drainage Catch Basin**	The Contractor shall perform the fabrication of brick storm drainage catch basins. The work includes excavation, brick work, armored concrete base, riser, walls, patching and finish, frames and grating, as applicable, and connection to piping, all as necessary for the construction of brick storm drainage catch basins at the finished grades and elevations indicated. All work shall be performed in accordance with Sections 31 23 00.00 20 - "Excavation and Fill", 33 40 01 - "Storm Drainage". Unit of measurement shall be Each (EA). Units and locations will be specified on the task order.	12	EA	
E729	**Install Rip-Rap Storm Drainage Channel Lining**	The Contractor shall install rip-rap storm drainage channel lining. The work includes supply, delivery and installation of rip-rap channel lining. Typical detail is shown on contract drawing PLATE # 4. All work shall be performed in accordance with Sections 31 23 00.00 20 - "Excavation and Fill", 33 40 01 - "Storm Drainage", and 03 33 00 -"Cast-In-Place Architectural Concrete". Unit of measurement shall be square meters (SM), as computed by multiplying, in meters, area length by width, (L x W). Dimensions and locations will be specified on the task order.	50	SM	
E730	**Up-rise Manhole**	The Contractor shall perform the uprising of manhole. The work includes performing removal of frame and cover, bricks placement, reinstallation of frame and cover, removal of excess material and grading, all as necessary to up-rise manhole at the finished grades and elevations indicated. Typical details are shown on contract drawing PLATE # 2. All work shall be performed in accordance with Section 33 40 01 - "Storm Drainage Utilities". Unit of measurement shall be Each (EA). Units and locations will be specified on the task order.	5	EA	

ELIN	SHORT DESCRIPTION	FULL DESCRIPTION	EST QTY	UNIT OF ISSUE	UNIT PRICE (USD)
E731	**Up-rise Drainage Grate**	The Contractor shall perform the uprising of drainage grate. The work includes performing removal of frame and grate, bricks placement, reinstallation of frame and grate, removal of excess material and grading, all as necessary to up-rise drainage grate at the finished grades and elevations indicated. Typical details are shown on contract drawing PLATE # 6. All work shall be performed in accordance with Section 33 40 01 - "Storm Drainage". Unit of measurement shall be Each (EA). Units and locations will be specified on the task order.	5	EA	
E732	**Up-rise Valve or Meter Cover**	The Contractor shall perform the uprising of valve/meter cover. The work includes performing removal of frame and cover, bricks placement, reinstallation of frame and cover, removal of excess material and grading, all as necessary to up-rise frame and cover at the finished grades and elevations indicated. All work shall be performed in accordance with Section 33 40 01 - "Storm Drainage Utilities". Unit of measurement shall be Each (EA). Units and locations will be specified on the task order.	5	EA	
E733	**Aggregate Sub-Base Course for Bituminous Asphalt Pavements**	The Contractor shall perform the placement of crushed aggregate sub-base course for the bituminous asphalt pavement. The work includes performing site preparation, scarifying existing sub-grade, placement of ZA-40 aggregate sub-base, grading and compaction, as necessary for the construction of bituminous asphalt pavement. Minimum sub-base thickness for bituminous asphalt pavement shall be 20 cm compacted to 98% modified proctor density. When damage affects the base and sub-base courses, the damaged courses shall be entirely replaced with new material, which shall match the existing. Typical details are shown on contract drawing PLATE #"s 7, 8 & 10. All work shall be performed in accordance with Section 32 11 24 - "Graded Crushed Aggregate Base Course for Flexible Pavement". Unit of measurement shall be cubic meters (CM), as computed by multiplying, in meters, area length by width by depth, (L x W x D). Dimensions will be specified on the task order.	3,750	CM	
E734	**Aggregate Base Course for Bituminous Asphalt Pavements and Concrete Sidewalks**	The Contractor shall perform the placement of aggregate base course for bituminous asphalt pavement and concrete sidewalks. The work includes performing site preparation, placement of ZA-25 aggregate base, grading and compaction, as necessary for the construction of the bituminous asphalt pavement and concrete sidewalks. Minimum base thickness for bituminous asphalt pavement shall be 20cm compacted to 100% modified proctor density. Minimum base thickness for concrete sidewalks shall be 10 cm compacted to 98% modified proctor density. When damage affects the base and sub-base courses, the damaged courses shall be entirely replaced with new material. Typical details are shown on contract drawing PLATE #"s 7, 8, 10 & 18. All work shall be performed in accordance with Section 32 11 24 - "Graded Crushed Aggregate Base Course for Flexible Pavement". Unit of measurement shall be cubic meters (CM), as computed by multiplying, in meters, area length by width by depth, (L x W x D). Dimensions will be specified on the task order.	5,250	CM	

ELIN	SHORT DESCRIPTION	FULL DESCRIPTION	EST QTY	UNIT OF ISSUE	UNIT PRICE (USD)
E735	**Bituminous Asphalt Pavement Crack Sealing**	The Contractor shall perform crack repair in existing asphalt pavements. The work includes site preparation, cleaning and sealing of cracks by application of hot-poured asphalt cement or bitumen sealant. Typical details are shown on contract drawing PLATE # 9. All work shall be performed in accordance with Section 32 12 11 - "Bituminous Surface Treatment" or Section 32 01 22 "Bituminous Rejuvenation: Slurry Seal". Unit of measurement shall be linear meters (LM), as computed by measurement, in meters, area length (L). Work ordered under this ELIN may be in conjunction with work ordered under ELINS # A738 or #A739.	375	LM	
E736	**Bituminous Asphalt Pavement Repair**	The Contractor shall perform repair of existing bituminous asphalt pavement. The work includes surface preparation, supply, delivery and placement of 10cm compacted hot bituminous asphalt cement and primer coat. Typical details are shown on contract drawing PLATE #10. All work shall be performed in accordance with Section 32 12 17 - "Hot Mix Bituminous Pavement" and Section 32 12 10 – "Bituminous Tack and Prime Coats". Unit of measurement shall be square meters (SM), as computed by multiplying, in meters, area length by width, (L x W).	6,300	SM	
E737	**Bituminous Asphalt Pavement Overlay**	The Contractor shall perform the application of bituminous asphalt pavement overlay to the existing pavement. The work includes surface preparation, supply, delivery, placement of 6 cm compacted hot bituminous asphalt cement D 12 wearing coat and tack coat. Typical details are shown on contract drawing PLATE # 11. All work shall be performed in accordance with Sections 32 12 17 - "Hot Mix Bituminous Pavement" and Section 32 12 10 – "Bituminous Tack and Prime Coats". Unit of measurement shall be square meters (SM), as computed by multiplying, in meters, area length by width, (L x W). Work ordered under this ELIN may be in conjunction with work ordered under ELIN's # A707	10,300	SM	
E738	**Bituminous Asphalt Pavement Slurry Seal**	The Contractor shall perform the application of slurry seal on existing pavement. The work includes all labor, materials, equipment, supervision and transportation required to perform the application of asphalt slurry seal to existing asphalt pavement. The work includes surface preparation, and application of asphalt slurry seal. Typical details are shown on contract drawing PLATE # 17. All work shall be performed in accordance with Sections 32 12 17 -"Bituminous Hot Mix Pavement" and 32 01 22 - "Bituminous Rejuvenation: Slurry Seal". Unit of measurement shall be square meters (SM), as computed by multiplying, in meters, area length by width, (L x W). Dimensions will be specified on the task order. Work ordered under this ELIN may be in conjunction with work ordered under ELINS # A735 and/or #A736.	1,500	SM	

ELIN	SHORT DESCRIPTION	FULL DESCRIPTION	EST QTY	UNIT OF ISSUE	UNIT PRICE (USD)
E739	**Bituminous Asphalt Pavement Surface Treatment**	The Contractor shall perform treatment on the bituminous asphalt pavement. The work includes all labor, materials, equipment, supervision and transportation required to perform the application of bituminous surface treatment. The work includes surface preparation and application of bituminous surface treatment. Typical details are shown on contract drawing PLATE # 17. All work shall be performed in accordance with Sections 32 12 17 Hot Mix Bituminous Pavement & Section 32 12 11-"Bituminous Surface Treatment". Unit of measurement shall be square meters (SM), as computed by multiplying, in meters, area length by width, (L x W). Dimensions will be specified on the task order. Work ordered under this ELIN may be in conjunction with work ordered under ELINS # A735 and/or #A736.	15,300	SM	
E740	**New Bituminous Asphalt Pavement**	The Contractor shall perform the application of new bituminous asphalt pavement. The work includes surface preparation, supply, delivery, placement of a 6 cm compacted bituminous asphalt pavement S 20 binder course, primer coat, 4 cm compacted bituminous asphalt pavement D 12 wearing course, and tack coat. Typical details are shown on contract drawing PLATE #'s 7 & 8. All work shall be performed in accordance with Section 32 12 17 - "Hot Mix Bituminous Pavement". Unit of measurement shall be square meters (SM), as computed by multiplying, in meters, area length, by width, (L x W). Dimensions will be specified on the task order. Work ordered under this ELIN may be in conjunction with work ordered under ELIN's #A700, A708,& A734.	20,300	SM	
E741	**Obliteration of Existing Bituminous Asphalt Pavement Road Markings**	The Contractor shall perform the obliteration of existing road markings. All work shall be performed in accordance with Section 32 17 23.00 20-"Pavement Markings". Unit of measurement shall be square meters (SM) of painted area, as computed by multiplying, in meters, area length, by width, (L x W). Dimensions and locations will be specified on the task order.	850	SM	
E742	**Paint Solid Pavement Lines**	The Contractor shall perform the painting of solid pavement lines. The work includes surface preparation and painting of 10 cm wide solid pavement lines. Application of this ELIN will be used for pavement lateral lines, parking stall and diagonal no-parking lines. All work shall be performed in accordance with Section 32 17 23.00 20 -"Pavement Markings". Unit of measurement shall be linear meters (LM) of painted area. Paint colors, dimensions and locations will be specified on the task order.	1,700	LM	
E743	**Paint Reflective Solid Pavement Lines**	The Contractor shall perform the painting of solid reflective pavement lines. The work includes surface preparation and painting of 10 cm (4 inch) wide solid pavement lines. Application of this ELIN will be used for pavement center and lateral lines only. All work shall be performed in accordance with Section 32 17 23.00 20 -"Pavement Markings". Unit of measurement shall be linear meters (LM) of painted area. Paint colors, dimensions and locations will be specified on the task order.	1,300	LM	

ELIN	SHORT DESCRIPTION	FULL DESCRIPTION	EST QTY	UNIT OF ISSUE	UNIT PRICE (USD)
E744	**Paint Center Pavement Lines**	The Contractor shall perform the painting of center pavement lines. The work includes surface preparation and painting of 10 cm wide center pavement lines. Application of this ELIN will be used for pavement lateral lines, parking stall and diagonal no-parking lines. All work shall be performed in accordance with Section 32 17 23.00 20 -"Pavement Markings". Unit of measurement shall be linear meters (LM) of painted area. Paint colors, dimensions and locations will be specified on the task order.	1,300	LM	
E745	**Paint Reflective Center Pavement Lines**	The Contractor shall perform the painting of center reflective pavement lines. The work includes surface preparation and painting of 10 cm (4 inch) wide reflective center pavement lines. Application of this ELIN will be used for pavement center and lateral lines only. All work shall be performed in accordance with Section 32 17 23.00 20 -"Pavement Markings". Unit of measurement shall be linear meters (LM) of painted area. Paint colors, dimensions and locations will be specified on the task order.	250	LM	
E746	**Paint Concrete Wheel Stops and Curbs**	The Contractor shall perform the painting of existing concrete wheel stops and pavement curbs. The work includes surface preparation and painting of all designated exposed surfaces. All work shall be performed in accordance with Section 32 17 23.00 20 -"Pavement Markings". Unit of measurement shall be square meters (SM) of painted area, as computed by multiplying actual dimensions of paint length, by width, (L x W). Paint colors, dimensions and locations will be specified on the task order.	250	SM	
E747	**Paint Pedestrian Crosswalk Markings**	The Contractor shall perform the painting of pedestrian crosswalk markings. The work includes surface preparation and painting. Typical details are shown on contract drawing PLATE # 14. All work shall be performed in accordance with Section 32 17 23.00 20 -"Pavement Markings". Unit of measurement shall be square meters (SM) of actual painted area, as computed by multiplying actual dimensions of paint length, by width, (L x W). Paint colors and locations will be specified on the task order.	200	SM	
E748	**Paint Reflective Pedestrian Crosswalk Markings**	The Contractor shall perform the painting of reflective pedestrian crosswalk markings. The work includes surface preparation and painting. Typical details are shown on contract drawing PLATE # 14. All work shall be performed in accordance with Section 32 17 23.00 20 -"Pavement Markings". Unit of measurement shall be square meters (SM) of actual painted area, as computed by multiplying actual dimensions of paint length, by width, (L x W). Paint colors and locations will be specified on the task order.	200	SM	
E749	**Paint Stop Markings**	The Contractor shall perform the painting of stop markings. The work includes surface preparation and painting. Typical details are shown on contract drawing PLATE # 14. All work shall be performed in accordance with Section 32 17 23.00 20 -"Pavement Markings". Unit of measurement shall be square meters (SM) of actual painted area, as computed by multiplying actual dimensions of paint length, by width, (L x W). Paint colors and locations will be specified on the task order.	40	SM	

ELIN	SHORT DESCRIPTION	FULL DESCRIPTION	EST QTY	UNIT OF ISSUE	UNIT PRICE (USD)
E750	**Paint Reflective Stop Markings**	The Contractor shall perform the painting of reflective stop markings. The work includes surface preparation and painting. Typical details are shown on contract drawing PLATE # 14. All work shall be performed in accordance with Section 32 17 23.00 20-"Pavement Markings". Unit of measurement shall be square meters (SM) of actual painted area, as computed by multiplying actual dimensions of paint length, by width, (L x W). Paint colors and locations will be specified on the task order.	40	SM	
E751	**Paint Yield Markings**	The Contractor shall perform the painting of yield markings. The work includes surface preparation and painting. Typical details are shown on contract drawing PLATE # 15. All work shall be performed in accordance with Section 32 17 23.00 20 -"Pavement Markings". Unit of measurement shall be Each (EA). Paint colors and locations will be specified on the task order.	13	EA	
E752	**Paint Reflective Yield Markings**	The Contractor shall perform the painting of yield markings. The work includes surface preparation and painting. Typical details are shown on contract drawing PLATE # 15. All work shall be performed in accordance with Section 32 17 23.00 20 -"Pavement Markings". Unit of measurement shall be Each (EA). Paint colors and locations will be specified on the task order.	13	EA	
E753	**Paint Direction Arrows Markings**	The Contractor shall perform the painting of directional arrow markings. The work includes surface preparation and painting. Typical details are shown on contract drawing PLATE # 15. All work shall be performed in accordance with Section 32 17 23.00 20 -"Pavement Markings". Unit of measurement shall be EA (EA). Paint colors and locations will be specified on the task order. Unit of measurement shall be Each (EA). Paint colors and locations will be specified on the task order.	25	EA	
E754	**Paint Reflective Direction Arrows Markings**	The Contractor shall perform the painting of reflective directional arrow markings. The work includes surface preparation and painting. Typical details are shown on contract drawing PLATE # 15. All work shall be performed in accordance with Section 32 17 23.00 20 -"Pavement Markings". Unit of measurement shall be Each (EA). Paint colors and locations will be specified on the task order.	13	EA	
E755	**Paint Special Markings**	The Contractor shall perform the painting of special pavement markings, such as but not limited to, handicap parking symbols and "NO PARKING" letters. The work includes surface preparation and painting. Typical details are shown on contract drawing PLATE # 14. All work shall be performed in accordance with Section 32 17 23.00 20 -"Pavement Markings". Unit of measurement shall be square meters (SM) of actual painted area, as computed by multiplying actual dimensions of paint area length, by width, (L x W). Paint colors and locations will be specified on the task order.	25	SM	
E756	**Pavement Traffic Road Reflectors**	The Contractor shall perform the installation of pavement traffic reflectors. The work includes supply, delivery, surface preparation and installation. All work shall be performed in accordance with Section 32 17 23.00 20 - "Pavement Markings". Unit of measurement shall be Each (EA). Reflector colors and locations will be specified on the task order.	25	EA	

ELIN	SHORT DESCRIPTION	FULL DESCRIPTION	EST QTY	UNIT OF ISSUE	UNIT PRICE (USD)
E757	**Pavement Striping**	The Contractor shall perform the re-striping of existing striped roads and to stripe newly paved or otherwise un-striped roads, in accordance with the Spanish law and PG-3. The work shall include all types of solid and reflective striping and pavement marking of all types, including but not limited to: obliteration of existing road markings, solid and broken striping center and lateral striping, pavement traffic reflectors, all pavement edge markings, turning radius markings, pedestrian crosswalk markings, directional arrows, stop or yield pavement markings, and any special markings required. Typical details are shown on contract drawing PLATE #'S 14, & 15. All work shall be performed in accordance with Section 32 17 23.00 20 -"Pavement Markings". Unit of measurement shall be kilometer (KM) of painted area. Paint colors, dimensions and locations will be specified on the task order.	35	KM	
E758	**Parking Lot Striping**	The Contractor shall perform the re-striping of existing striped parking lots same as existing and to stripe newly paved or otherwise un-striped parking areas. The work shall include all types of solid and reflective striping and pavement marking of all types, including but not limited to: obliteration of existing markings, solid and broken striping, pavement traffic reflectors, all pavement edge makings, turning radius markings, pedestrian crosswalk markings, directional arrows, stop or yield pavement markings, any special markings required, and concrete wheel stops and curbs. Typical details are shown on contract drawing PLATE #'S 14, & 15. All work shall be performed in accordance with Section 32 17 23.00 20-"Pavement Markings". Unit of measurement shall be square meter (SM) of painted area. Paint colors, dimensions and locations will be specified on the task order.	37,500	SM	
E759	**Reinforced Sidewalks Construction**	The Contractor shall perform the construction of 10 cm thick reinforced concrete sidewalks. The work includes site preparation, construction and installation of forms, placement of WWF steel, concrete placement, installation of vapor barrier, installation of expansion joints and control joints, and finish. Typical details are shown on contract drawing PLATE #18. All work shall be performed in accordance with Section 03 33 00-"Cast-In-Place Architectural Concrete". Unit of measurement shall be square meter (SM), as computed by multiplying, in meters, area length, by width, (L x W). Dimensions will be specified on the task order. Work ordered under this ELIN may be in conjunction with work ordered under ELINS # A712 and #A734.	1,500	SM	
E760	**Concrete Wheel Stops**	The Contractor shall provide and install concrete wheel stops. The work includes fabrication and installation of concrete wheel stops. Typical wheel stop construction detail is shown on contract drawing PLATE # 16. All work shall be performed in accordance with Section 03 33 00 -"Cast-In-Place Architectural Concrete". Unit of measurement shall be each (EA). Units and locations will be specified on the task order.	50	EA	
E761	**Clean Culverts**	The Contractor shall clean culverts. The work includes removing dirt, debris and foreign matter that obstructs the interior of the culvert pipe. All work shall be performed in accordance with section 01 57 19.00 20 - "Temporary Environmental Controls". Unit of measurement shall be linear meters (LM). Units and locations will be specified on the task order.	100	LM	

ELIN	SHORT DESCRIPTION	FULL DESCRIPTION	EST QTY	UNIT OF ISSUE	UNIT PRICE (USD)
E762	**Clean Storm Drainage Channels**	The Contractor shall clean storm drainage channels. The work includes removing dirt, debris and foreign matter that obstructs the drainage channel. All work shall be performed in accordance with section 01 57 19.00 20 -"Temporary Environmental Controls". Unit of measurement shall be linear meters (LM). Units and locations will be specified on the task order.	2,500	LM	
E763	**Install Pre-Cast Concrete Curbs**	The Contractor shall provide and install pre-cast concrete curbs. The work includes excavation, lean concrete and placement of pre-cast concrete curbs. Typical detail of pre-cast concrete curb installation is shown on contract drawing PLATE # 17. All work shall be performed in accordance with Section 03 33 00-"Cast-in-Place Architectural Concrete". Unit of measurement shall be linear meters (LM). Units and locations will be specified on the task order.	100	LM	
E764	**Replace Frame and Cover on Existing Utilities**	The Contractor shall replace frame and cover on existing utilities. The work includes removal and disposal of old frame and cover, and providing and installation of new frame and cover to new grade. All work shall be performed in accordance with Section 05 50 00 -"Metal Miscellaneous and Fabrications". Unit of measurement shall be each (EA).	10	EA	
E765	**Install Guard Posts**	The Contractor shall install guard posts. The work includes site preparation, providing steel pipe, internal armoring and anchorage of post with concrete solidly and paint stripes. Typical guard post installation detail is shown on contract drawing PLATE # 16. All work shall be performed in accordance with Sections 05 50 00 -"Metal Miscellaneous and Fabrications" and 03 33 00 -"Cast-in-Place Architectural Concrete". Unit of measurement shall be each (EA).	25	EA	
E766	**Topographical Surveying**	The Contractor shall perform topographical surveying at the job site in the area indicated. The work includes establishing benchmark of elevations and stake out the new grade spots elevation. The survey shall be made with elevations data, mean sea level at Alicante for maintenance and repair works. Should the works are for new construction, the survey shall be made with elevations data, mean sea level at Alicante and U.T.M coordinates which will be provided by the Government. All survey data shall be produced and submitted on AUTOCAD software, latest version. The Contractor shall submit all survey data to the Contracting Officer for approval. Submit all CAD files for the final drawings on CD ROM disks. Scan all files submitted for viruses using the latest version of a commercial scanning program. Unit of measurement shall be square meters (SM), as computed by multiplying, in meters, area length, by width, (L x W).	25,300	SM	

ELIN	SHORT DESCRIPTION	FULL DESCRIPTION	EST QTY	UNIT OF ISSUE	UNIT PRICE (USD)
E767	**Site Plan Layout**	The Contractor shall perform and provide detailed drawings for exact sizes, exact numbers and detailed positioning of items and final as-built drawings that shall clearly depict the technical design of the facility. Drawings shall be in sufficient detail to show compliance with the contract requirements. All work shall be performed in accordance with Computer Aided Design and Drafting Policy. Drawings shall meet the applicable drawing standards specified in the Guide for Architect Engineer Firms available on the website for Atlantic Division, Naval Facilities Engineering Command. All drawings submitted for review shall be in D size, 24 inch x 36 inch, approximately 61 cm x 91 cm. Other drawing size may be used, if approved by the Contracting Officer. Use Naval Station Rota, Public Works Department Title Block. Unit of measurement shall be each (EA).	10	EA	
E768	**Emergency Repairs Asphalt Pot Holes**	The Contractor shall perform emergency repairs to asphalt potholes within the limits threshold of 1sm per hole. Emergency repairs shall be responded within 4 hours of the Government notification during Government regular working hours. If the emergency repair exceed the threshold the Contractor shall provide a Cost Proposal. The work includes removal of all loose debris, broken pieces of pavement and dust. Fill pothole with ready-to-use bituminous polymer modified cold asphalt and spread with rake or shovel and compact cold asphalt with manual roller or tamper to just over the level of the existing pavement. Thickness and application in layers of the bituminous cold asphalt shall be done as recommended by the manufacturer. Cold asphalt patching material shall comply with "Cold Asphalt Specifications"	10	EA	
E800	**Removal of Corrugated and Pre-Formed Metal Sheet Roofing.**	The Contractor shall perform the removal of existing corrugated and pre-formed metal sheet roofing. All rubbish, debris and loose material resulting from removal of corrugated and pre-formed metal sheet roofing shall be removed from the limits of the Naval Station daily. All work shall be performed in accordance with Sections 01 57 19.00 20 & 02 41 00 Unit of measurement shall be square meters (SM), as computed by multiplying, in meters, area length by width (L x W) , including all overlaps, overhangs, around roofing equipment/vents. Vertical walls and general obstructions 30.48 cm. (one foot) and under and all vertical walls over 30.48 cm (one foot) should be added to the square meter total. Dimensions and locations will be specified on the task order.	400	SM	
E801	**Removal of Corrugated and Pre-Formed Metal Roofing Ridge.**	The Contractor shall perform the removal of existing corrugated and pre-formed metal roofing ridge. All rubbish, debris and loose material resulting from removal of corrugated and pre-formed metal roofing ridge shall be removed from limits of the Naval Station daily. All work shall be performed in accordance with Sections 01 57 19.00 20 & 02 41 00 Unit of measurement shall be linear meters (LM) of removed roof ridge. Dimensions and locations will be specified on the task order.	60	LM	

ELIN	SHORT DESCRIPTION	FULL DESCRIPTION	EST QTY	UNIT OF ISSUE	UNIT PRICE (USD)
E802	**Removal of Corrugated Cement-Asbestos Sheet Roofing.**	The Contractor shall perform the removal of existing cement-asbestos sheet roofing. All rubbish, debris and loose material resulting from removal of cement-asbestos sheet roofing shall be removed from limits of the Naval Station daily. All work shall be performed in accordance with Sections 01 57 19.00 20, 02 41 00 & 02 82 14.00 10 Unit of measurement shall be square meters (SM), as computed by multiplying, in meters, area length by width (L x W) , including all overlaps, overhangs, around roofing equipment/vents. Vertical walls and general obstructions 30.48 cm. (one foot) and under and all vertical walls over 30.48 cm (one foot) should be added to the square meter total. Dimensions and locations will be specified on the task order.	1,000	SM	
E803	**Removal of Corrugated Plastic Sheet Roofing.**	The Contractor shall perform the removal of existing corrugated plastic sheet roofing. All rubbish, debris and loose material resulting from removal of corrugated plastic sheet roofing shall be removed from limits of the Naval Station daily. All work shall be performed in accordance with Sections 01 57 19.00 20 & 02 41 00 Unit of measurement shall be square meters (SM), as computed by multiplying, in meters, area length by width (L x W) , including all overlaps, overhangs, around roofing equipment/vents. Vertical walls and general obstructions 30.48 cm. (one foot) and under and all vertical walls over 30.48 cm (one foot) should be added to the square meter total. Dimensions and locations will be specified on the task order.	100	SM	
E804	**Removal of Gravel Surfaced Bituminous Built-Up Roofing.**	The Contractor shall perform the removal of existing gravel surfaced bituminous built-up roofing. Work includes removal of existing loose gravel. All debris and loose material resulting from removal of gravel surfaced bituminous built-up roofing shall be removed from limits of the Naval Station daily. All work shall be performed in accordance with Sections 01 57 19.00 20 & 02 41 00 Unit of measurement shall be square meters (SM), as computed by multiplying, in meters, area length by width (L x W) , including all overlaps, overhangs, around roofing equipment/vents. Vertical walls and general obstructions 30.48 cm. (one foot) and under and all vertical walls over 30.48 cm (one foot) should be added to the square meter total. Dimensions and locations will be specified on the task order.	250	SM	
E805	**Removal of Polymeric Asphalt Sheet Roofing.**	The Contractor shall perform the removal of existing polymeric asphalt sheet roofing. All debris and loose material resulting from removal of polymeric asphalt sheet roofing shall be removed from limits of the Naval Station daily. All work shall be performed in accordance with Sections 01 57 19.00 20 & 02 41 00 Unit of measurement shall be square meters (SM), as computed by multiplying, in meters, area length by width (L x W) , including all overlaps, overhangs, around roofing equipment/vents. Vertical walls and general obstructions 30.48 cm. (one foot) and under and all vertical walls over 30.48 cm (one foot) should be added to the square meter total. Dimensions and locations will be specified on the task order.	2,000	SM	

ELIN	SHORT DESCRIPTION	FULL DESCRIPTION	EST QTY	UNIT OF ISSUE	UNIT PRICE (USD)
E806	**Removal of Inverted Insulated Roofing.**	The Contractor shall perform the removal of existing inverted insulated roofing. Includes removal of existing loose gravel ballast, insulation and all polymeric asphalt sheet roofing membranes, where applicable. All debris and loose material resulting from removal of inverted insulated roofing shall be removed from limits of the Naval Station daily. All work shall be performed in accordance with Sections 01 57 19.00 20 & 02 41 00 Unit of measurement shall be square meters (SM), as computed by multiplying, in meters, area length by width (L x W) , including all overlaps, overhangs, around roofing equipment/vents. Vertical walls and general obstructions 30.48 cm. (one foot) and under and all vertical walls over 30.48 cm (one foot) should be added to the square meter total. Dimensions and locations will be specified on the task order.	600	SM	
E807	**Removal of Loose Gravel Ballast.**	The Contractor shall perform the removal of existing loose gravel ballast from gravel surfaced bituminous built-up and inverted insulated roofing. All debris and loose material resulting from removal of loose gravel ballast shall be removed from limits of the Naval Station daily. All work shall be performed in accordance with Sections 01 57 19.00 20 & 02 41 00 Unit of measurement shall be square meters (SM), as computed by multiplying, in meters, area length by width (L x W) , including all overlaps, overhangs, around roofing equipment/vents. Vertical walls and general obstructions 30.48 cm. (one foot) and under and all vertical walls over 30.48 cm (one foot) should be added to the square meter total. Dimensions and locations will be specified on the task order.	200	SM	
E808	**Removal of Curved Arabic Tile Roofing.**	The Contractor shall perform the removal of existing curved Arabic tile roofing. All debris and loose material resulting from the removal of the curved Arabic tile roofing shall be removed from limits of the Naval Station daily. All work shall be performed in accordance with Sections 01 57 19.00 20 & 02 41 00 Unit of measurement shall be square meters (SM), as computed by multiplying, in meters, area length by width (L x W) , including all overlaps, overhangs, around roofing equipment/vents. Vertical walls and general obstructions 30.48 cm. (one foot) and under and all vertical walls over 30.48 cm (one foot) should be added to the square meter total. Dimensions and locations will be specified on the task order.	200	SM	
E809	**Removal of Rain Gutters and Down Spouts.**	The Contractor shall perform the removal of existing roof gutters and down spouts. Work includes removal of all gutter and/or down spout hangers and fasteners. All debris and loose material resulting from removal of gutters and down spouts shall be removed from limits of the Naval Station daily. All work shall be performed in accordance with Sections 01 57 19.00 20 & 02 41 00 Unit of measurement shall be linear meters (LM) of removed roof gutters and/or down spouts. Dimensions and locations will be specified on the task order.	400	LM	

ELIN	SHORT DESCRIPTION	FULL DESCRIPTION	EST QTY	UNIT OF ISSUE	UNIT PRICE (USD)
E810	**Removal of Polyurethane Foam Roof.**	The Contractor shall perform the removal of existing polyurethane foam roof. All debris and loose material resulting from the removal of existing polyurethane foam roof shall be removed from limits of the Naval Station daily. All work shall be performed in accordance with Sections 01 57 19.00 20 & 02 41 00 Unit of measurement shall be square meters (SM), as computed by multiplying, in meters, area length by width (L x W) , including all overlaps, overhangs, around roofing equipment/vents. Vertical walls and general obstructions 30.48 cm. (one foot) and under and all vertical walls over 30.48 cm (one foot) should be added to the square meter total. Dimensions and locations will be specified on the task order.	1,000	SM	
E811	**Installation of Corrugated Metal Sheet Roofing.**	The Contractor shall perform the installation of corrugated metal sheet roofing. The work includes surface preparation, supply, delivery and installation of corrugated metal sheet roof, all as necessary so as to provide for a complete and functional roofing system. Where applicable, installed corrugated metal sheet roofing shall match existing and adjacent roofing in shape, size and profile. Typical details are shown on contract drawing PLATES #'s 1, 3 & 11. All work shall be performed in accordance with Section 07 41 13 . Unit of measurement shall be square meters (SM), as computed by multiplying, in meters, area length by width (L x W) , including all overlaps, overhangs, around roofing equipment/vents. Vertical walls and general obstructions 30.48 cm. (one foot) and under and all vertical walls over 30.48 cm (one foot) should be added to the square meter total. Dimensions and locations will be specified on the task order.	1,000	SM	
E812	**Installation of Corrugated Sandwich Metal Sheet Roofing.**	The Contractor shall perform the installation of corrugated sandwich metal sheet roofing. The work includes surface preparation, supply, delivery and installation of corrugated sandwich metal sheet roof, all as necessary so as to provide for a complete and functional roofing system. Where applicable, installed corrugated sandwich metal sheet roofing shall match existing and adjacent roofing in shape, size and profile. All work shall be performed in accordance with Section 07 41 13. Unit of measurement shall be square meters (SM), as computed by multiplying, in meters, area length by width (L x W) , including all overlaps, overhangs, around roofing equipment/vents. Vertical walls and general obstructions 30.48 cm. (one foot) and under and all vertical walls over 30.48 cm (one foot) should be added to the square meter total. Dimensions and locations will be specified on the task order.	1,000	SM	
E813	**Installation of Corrugated Metal Sheet Roofing Ridge.**	The Contractor shall perform the installation of corrugated metal sheet roofing ridge. The work includes surface preparation, supply, task and installation of corrugated metal sheet roof ridge, all as necessary so as to provide for a complete and functional roofing system. Where applicable, installed corrugated metal sheet roofing ridge shall match existing and adjacent roofing ridge in shape, size and profile. Typical details are shown on contract drawing PLATES #'s 1, 3 & 11. All work shall be performed in accordance with Section 07 41 13. Unit of measurement shall be linear meters (LM) of installed corrugated metal sheet roofing ridge. Dimensions and locations will be specified on the task order.	30	LM	

ELIN	SHORT DESCRIPTION	FULL DESCRIPTION	EST QTY	UNIT OF ISSUE	UNIT PRICE (USD)
E814	**Installation of Pre-Formed Metal Sheet Roofing.**	The Contractor shall perform the installation of pre-formed metal sheet roofing. The work includes surface preparation, supply, delivery and installation of pre-formed metal sheet roof, all as necessary so as to provide for a complete and functional roofing system. Where applicable, installed pre-formed metal sheet roofing shall match existing and adjacent roofing in shape, size and profile. Typical details are shown on contract drawing PLATES #'s 1, 3 & 11. All work shall be performed in accordance with Section 07 41 13. Unit of measurement shall be square meters (SM), as computed by multiplying, in meters, area length by width (L x W) , including all overlaps, overhangs, around roofing equipment/vents. Vertical walls and general obstructions 30.48 cm. (one foot) and under and all vertical walls over 30.48 cm (one foot) should be added to the square meter total. Dimensions and locations will be specified on the task order.	200	SM	
E815	**Installation of Pre-Formed Metal Sheet Roofing Ridge.**	The Contractor shall perform the installation of pre-formed metal sheet roofing ridge. The work includes surface preparation, supply, task and installation of pre-formed metal sheet roof ridge, all as necessary so as to provide for a complete and functional roofing system. Where applicable, installed pre-formed metal sheet roofing ridge shall match existing and adjacent roofing ridge in shape, size and profile. Typical details are shown on contract drawing PLATES #'s 1, 3 & 11. All work shall be performed in accordance with Section 07 41 13. Unit of measurement shall be linear meters (LM) of installed pre-formed metal sheet roofing ridge. Dimensions and locations will be specified on the task order.	30	LM	
E816	**Installation of Pre-Formed Sandwich Metal Sheet Roofing.**	The Contractor shall perform the installation of pre-formed sandwich metal sheet roofing. The work includes surface preparation, supply, delivery and installation of pre-formed sandwich metal sheet roof, all as necessary so as to provide for a complete and functional roofing system. Where applicable, installed pre-formed sandwich metal sheet roofing shall match existing and adjacent roofing in shape, size and profile. All work shall be performed in accordance with Section 07 41 13. Unit of measurement shall be square meters (SM), as computed by multiplying, in meters, area length by width (L x W) , including all overlaps, overhangs, around roofing equipment/vents. Vertical walls and general obstructions 30.48 cm. (one foot) and under and all vertical walls over 30.48 cm (one foot) should be added to the square meter total. Dimensions and locations will be specified on the task order.	200	SM	
E817	**Re-Sealing of Pre-Formed and Corrugated Metal Sheet Roofing Joints and Overlaps.**	The Contractor shall perform the re-sealing of pre-formed and corrugated metal sheet roofing joints and overlaps with a silicone-rubber base mastic caulking. Existing joint and/or overlap caulking shall be completely removed and the surface area to receive new caulking shall be thoroughly cleaned and prepared. Typical details are shown on contract drawing PLATES #'s 1, 3 & 11. All work shall be performed in accordance with Sections 07 41 13 & 07 92 00. Unit of measurement shall be linear meters (LM) of re-sealed pre-formed and/or corrugated metal sheet roofing joints and/or overlaps. Dimensions and locations will be specified on the task order.	200	LM	

ELIN	SHORT DESCRIPTION	FULL DESCRIPTION	EST QTY	UNIT OF ISSUE	UNIT PRICE (USD)
E818	**Re-Sealing of Pre-Formed and Corrugated Metal Sheet Roofing Fasteners.**	The Contractor shall perform the re-sealing of pre-formed and corrugated metal sheet roofing fasteners with a silicone-rubber base mastic caulking. Existing fasteners caulking shall be completely removed and the surface area to receive new caulking shall be thoroughly cleaned and prepared. Typical details are shown on contract drawing PLATES #'s 1, 3 & 11. All work shall be performed in accordance with Sections 07 41 13 & 07 92 00. Unit of measurement shall be each (EA) re-sealed pre-formed and/or corrugated metal sheet roofing fastener. Quantities and locations will be specified on the task order.	200	EA	
E819	**Waterproofing of union between Pre-Formed and Corrugated Metal Sheet Roofing and Vertical walls.**	The Contractor shall perform the waterproofing of the union between pre-formed and corrugated metal sheet roofing with vertical surfaces by means of Styrene Butadiene Styrene (SBS) modified membrane. Where applicable, existing aluminum finished polymeric asphalt sheets or Styrene Butadiene Styrene (SBS) modified membrane shall be removed and the surface area to receive new Butadiene Styrene (SBS) modified membrane shall be thoroughly cleaned and prepared. Typical details are shown on contract drawing PLATES #'s 1, 3 & 11. All work shall be performed in accordance with Section 07 52 00 and 07 41 13. Unit of measurement shall be linear meters (LM) of installed polymeric asphalt sheet roofing at vertical junctions. Dimensions and locations will be specified on the task order.	50	LM	
E820	**Installation of Corrugated Plastic Sheet Roofing.**	The Contractor shall perform the installation of corrugated plastic sheet roofing. The work , including surface preparation, supply, delivery and installation of corrugated plastic sheet roof, all as necessary so as to provide for a complete and functional roofing system. Where applicable, installed corrugated plastic sheet roofing shall match existing and adjacent roofing in shape, size, color and profile. Typical details are shown on contract drawing PLATE # 1, 3 & 11. All work shall be performed in accordance with Section 07 54 19. Unit of measurement shall be square meters (SM), as computed by multiplying, in meters, area length by width (L x W) , including all overlaps, overhangs, around roofing equipment/vents. Vertical walls and general obstructions 30.48 cm. (one foot) and under and all vertical walls over 30.48 cm (one foot) should be added to the square meter total. Dimensions and locations will be specified on the task order.	100	SM	
E821	**Installation of Corrugated Plastic Sheet Roofing Ridges.**	The Contractor shall perform the installation of corrugated plastic sheet roofing ridges. The work includes surface preparation, supply and installation of corrugated plastic sheet roofing ridges, all as necessary so as to provide for a complete and functional roofing system. Where applicable, installed corrugated plastic sheet roofing ridges shall match existing and adjacent roofing ridges in shape, size, color and profile. Typical details are shown on contract drawing PLATES #'s 1, 3 & 11. All work shall be performed in accordance with Section 07 54 19. Unit of measurement shall be linear meters (LM) installed corrugated plastic sheet roofing ridges. Dimensions and locations will be specified on the task order.	100	LM	

ELIN	SHORT DESCRIPTION	FULL DESCRIPTION	EST QTY	UNIT OF ISSUE	UNIT PRICE (USD)
E822	**Re-Sealing of Corrugated Plastic Sheet Roofing Joints and Overlaps.**	The Contractor shall perform the re-sealing of corrugated plastic sheet roofing joints and overlaps with a silicone-rubber base mastic caulking. Existing joint and/or overlap caulking shall be completely removed and the surface area to receive new caulking shall be thoroughly cleaned and prepared. Typical details are shown on contract drawing PLATES #'s 1, 3 & 11. All work shall be performed in accordance with Sections 07 54 19 & 07 92 00. Unit of measurement shall be linear meters (LM) of re-sealed corrugated plastic sheet roofing joints and/or overlaps. Dimensions and locations will be specified on the task order.	200	LM	
E823	**Re-Sealing of Corrugated Plastic Sheet Roofing Fasteners.**	The Contractor shall perform the re-sealing of corrugated plastic sheet roofing fasteners with a silicone-rubber base mastic caulking. Existing fasteners caulking shall be completely removed and the surface area to receive new caulking shall be thoroughly cleaned and prepared. Typical details are shown on contract drawing PLATES #'s 1, 3 & 11. All work shall be performed in accordance with Sections 07 54 19 & 07 92 00. Unit of measurement shall be each (EA) re-sealed corrugated plastic sheet roofing fastener. Quantities and locations will be specified on the task order.	200	EA	
E824	**Waterproofing of union between Corrugated plastic Sheet Roofing and Vertical walls.**	The Contractor shall perform the waterproofing of the union between corrugated plastic sheet roofing with vertical surfaces by means of Styrene Butadiene Styrene (SBS) modified membrane. Where applicable, existing aluminum finished polymeric asphalt sheets or Styrene Butadiene Styrene (SBS) modified membrane shall be removed and the surface area to receive new Butadiene Styrene (SBS) modified membrane shall be thoroughly cleaned and prepared. Typical details are shown on contract drawing PLATES #'s 1, 3 & 11. All work shall be performed in accordance with Sections 07 52 00 and 07 54 19. Unit of measurement shall be linear meters (LM) of installed polymeric asphalt sheet roofing at vertical junctions. Dimensions and locations will be specified on the task order.	100	LM	
E825	**Installation of Styrene Butadiene Styrene (SBS) Modified Bituminous membrene roofing on Existing "Sevillana" Tile Roofs.**	The Contractor shall perform the installation of Styrene Butadiene Styrene (SBS) Modified Bituminous membrane roofing on existing "Sevillana" roofing. The work includes surface preparation, supply, delivery and installation of Styrene Butadiene Styrene (SBS) Modified Bituminous membrane roofing on existing "Sevillana" tile roofing, all as necessary so as to provide for a complete and functional roofing system. Installation of crickets at junction of deck and vertical surfaces shall be ordered separately under ELIN A807. Typical details are shown on contract drawing PLATES #'s 4, 8, 9, 12, 14, 15 & 16. All work shall be performed in accordance with Section 07 52 00. Unit of measurement shall be square meters (SM), as computed by multiplying, in meters, area length by width (L x W) , including all overlaps, overhangs, around roofing equipment/vents. Dimensions and locations will be specified on the task order.	200	SM	

ELIN	SHORT DESCRIPTION	FULL DESCRIPTION	EST QTY	UNIT OF ISSUE	UNIT PRICE (USD)
E826	**Installation of Styrene Butadiene Styrene (SBS) Modified Bituminous membrane Roofing on Concrete Roof Decks.**	The Contractor shall perform the installation of styrene butadiene styrene (SBS) modified bituminous membrane roofing on concrete roof decks. The work includes surface preparation, supply, delivery and installation of Styrene Butadiene Sstyrene (SBS) modified bituminous membrane roofing on concrete roof decks, all as necessary so as to provide for a complete and functional roofing system. Installation of crickets at junction of deck and vertical surfaces shall be ordered separately under ELIN A807. Typical details are shown on contract drawing PLATES #'s 4, 8, 9, 12, 14, 15 & 16. All work shall be performed in accordance with Section 07 52 00. Unit of measurement shall be square meters (SM), as computed by multiplying, in meters, area length by width (L x W) , including all overlaps, overhangs, around roofing equipment/vents. Dimensions and locations will be specified on the task order.	10,000	SM	
E827	**Installation of Insulated Concrete Roofing Systems.**	The Contractor shall perform the installation of insulated concrete roofing systems. Work includes installation of insulation, sloped cellular concrete and Styrene Butadiene Styrene (SBS) modified bituminous membrane plies, all as necessary so as to provide for a complete and functional roofing system. Averaged thickness of cellular concrete shall not exceed 10 cm. Typical details are shown on contract drawing PLATES #'s 4, 8, 9, 12, 13, 14, 15 & 16. All work shall be performed in accordance with Sections 03 52 00 and 07 52 00. Unit of measurement shall be square meters (SM), as computed by multiplying, in meters, area length by width (L x W) , including all overlaps, overhangs, around roofing equipment/vents. Vertical walls and general obstructions 30.48 cm. (one foot) and under and all vertical walls over 30.48 cm (one foot) should be added to the square meter total. Dimensions and locations will be specified on the task order.	500	SM	
E828	**Installation of Curved Arabic Tile Roofing.**	The Contractor shall perform the installation of curved Arabic tile roofing. The work includes surface preparation, supply, delivery and installation of curved Arabic tile roofing, all as necessary so as to provide for a complete and functional roofing system. Where applicable, installed curved Arabic tile roofing shall match existing and adjacent roofing in shape, size, color and profile. Typical details are shown on contract drawing PLATES #'s 5, 6 & 7. All work shall be performed in accordance with Section 07 32 13. Unit of measurement shall be square meters (SM), as computed by multiplying, in meters, area length by width (L x W) , including all overlaps, overhangs, around roofing equipment/vents. Vertical walls and general obstructions 30.48 cm. (one foot) and under and all vertical walls over 30.48 cm (one foot) should be added to the square meter total. Dimensions and locations will be specified on the task order.	200	SM	

ELIN	SHORT DESCRIPTION	FULL DESCRIPTION	EST QTY	UNIT OF ISSUE	UNIT PRICE (USD)
E829	**Installation of Curved Arabic Tile Roofing Ridges**	The Contractor shall perform the installation of curved Arabic tile roofing ridges. The work includes surface preparation, supply, task and installation of curved Arabic tile roofing ridges, all as necessary so as to provide for a complete and functional roofing system. Where applicable, installed curved Arabic tile roofing ridges shall match existing and adjacent roofing ridge in shape, size, color and profile. Typical details are shown on contract drawing PLATES #'s 5, 6 & 7. All work shall be performed in accordance with Section 07 32 13. Unit of measurement shall be linear meters (LM) installed curved Arabic tile roofing ridges. Dimensions and locations will be specified on the task order.	50	LM	
E830	**Rubber Paint over exiting Curved Arabic Tile Roofing.**	The Contractor shall perform the painting over the existing curved Arabic tile roofing. The work includes surface preparation, supply, delivery and clear rubber painting of curved Arabic tile roofing, all as necessary so as to provide for a complete and functional roofing system. All work shall be performed in accordance with Section 09 90 00. Unit of measurement shall be square meters (SM), as computed by multiplying, in meters, area length by width (L x W) , including all overlaps, overhangs, around roofing equipment/vents. Vertical walls and general obstructions 30.48 cm. (one foot) and under and all vertical walls over 30.48 cm (one foot) should be added to the square meter total. Dimensions and locations will be specified on the task order.	7,500	SM	
E831	**Installation of Sheet Metal Flashing on Aluminum Finished Polymeric (or SBS) Asphalt Sheet Roofing.**	The Contractor shall perform the installation of sheet metal flashing on aluminum finished polymeric (or SBS) asphalt sheet roofing. Typical details are shown on contract drawing PLATE # 4. All work shall be performed in accordance with Section 07 60 00. Unit of measurement shall be square meters (SM), as computed by multiplying, in meters, area length by width (L x W) , including all overlaps, overhangs, around roofing equipment/vents. Vertical walls and general obstructions 30.48 cm. (one foot) and under and all vertical walls over 30.48 cm (one foot) should be added to the square meter total. Dimensions and locations will be specified on the task order.	50	SM	
E832	**Installation of Sheet Metal Flashing on Parapet Copings.**	The Contractor shall perform the installation of sheet metal flashing on parapet copings. Typical details are shown on contract drawing PLATE # 8. All work shall be performed in accordance with Section 07 60 00. Unit of measurement shall be square meters (SM), as computed by multiplying, in meters, area length by width (L x W) , including all overlaps, overhangs, around roofing equipment/vents. Vertical walls and general obstructions 30.48 cm. (one foot) and under and all vertical walls over 30.48 cm (one foot) should be added to the square meter total. Dimensions and locations will be specified on the task order.	100	SM	
E833	**Installation of Sheet Metal Expansion Joint Flashings.**	The Contractor shall perform the installation of sheet metal expansion joint Flashings. Typical details are shown on contract drawing PLATE # 9. All work shall be performed in accordance with Section 07 60 00. Unit of measurement shall be linear meters (LM) of installed sheet metal expansion joint Flashings. Dimensions and locations will be specified on the task order.	100	LM	

ELIN	SHORT DESCRIPTION	FULL DESCRIPTION	EST QTY	UNIT OF ISSUE	UNIT PRICE (USD)
E834	**Installation of Rain Gutters.**	The Contractor shall perform the installation of rain gutters. Work shall include all hangers and fasteners necessary for a complete and functional installation. Typical details are shown on contract drawing PLATE # 11. All work shall be performed in accordance with Section 07 60 00. Unit of measurement shall be linear meters (LM) of installed rain gutters. Dimensions and locations will be specified on the delivery order.	500	LM	
E835	**Installation of Rain Gutters and/or Scupper Down Spouts.**	The Contractor shall perform the installation of rain gutters and/or scupper down spouts. Work shall include all hangers and fasteners necessary for a complete and functional installation. Typical details are shown on contract drawing PLATE # 10. All work shall be performed in accordance with Section 07 60 00. Unit of measurement shall be linear meters (LM) of installed rain gutters and/or scupper down spouts. Dimensions and locations will be specified on the task order.	100	LM	
E836	**Installation of Down Spout Conductor Heads.**	The Contractor shall perform the installation of down spout conductor heads. Typical details are shown on contract drawing PLATE # 10. All work shall be performed in accordance with Section 07 60 00. Unit of measurement shall be each (EA) installed down spout heads. Quantities and locations will be specified on the task order.	25	EA	
E837	**Application of Sprayed Polyurethane Foam (PUF) Roof Coating.**	The Contractor shall perform the application of sprayed polyurethane (PUF) roof coating on existing pre-formed and/or corrugated metal sheet, asbestos-cement, and curved Arabic red tile roofs. Work includes application of sprayed polyurethane and application of elastomeric roof coating. Typical details are shown on contract drawing PLATE # 2. All work shall be performed in accordance with Section 07 57 13. Unit of measurement shall be square meters (SM), as computed by multiplying, in meters, area length by width (L x W) , including all overlaps, overhangs, around roofing equipment/vents. Vertical walls and general obstructions 30.48 cms. (one foot) and under and all vertical walls over 30.48 cms. (one foot) should be added to the square meter total. Dimensions and locations will be specified on the task order.	1,200	SM	
E838	**Re-application of Elastomeric Roof Coating Over Polyurethane Foam (PUF).**	The Contractor shall perform the re-application of elastomeric roof coating over existing polyurethane foam (PUF) roof coating. Work includes removal of insulation which become damaged, overexposed to weather, or contaminated such that they cannot be cleaned and repaired to the satisfaction of the coating applicator, and provide new insulation and re-application of elastomeric roof coating. Typical details are shown on contract drawing PLATE # 2. All work shall be performed in accordance with Section 07 57 13. Unit of measurement shall be square meters (SM), as computed by multiplying, in meters, area length by width (L x W) , including all overlaps, overhangs, around roofing equipment/vents. Vertical walls and general obstructions 30.48 cms. (one foot) and under and all vertical walls over 30.48 cms. (one foot) should be added to the square meter total. Dimensions and locations will be specified on the task order.	8,000	SM	

ELIN	SHORT DESCRIPTION	FULL DESCRIPTION	EST QTY	UNIT OF ISSUE	UNIT PRICE (USD)
E839	**Re-paint Existing Polyurethane Foam.**	The Contractor shall perform the re-application of elastomeric roof coating over existing polyurethane foam coating. Work includes application of elastomeric roof coating over polyurethane foam. Typical details are shown on contract drawing PLATE # 2. All work shall be performed in accordance with Section 07 57 13. Unit of measurement shall be square meters (SM), as computed by multiplying, in meters, area length by width (L x W) , including all overlaps, overhangs, around roofing equipment/vents. Vertical walls and general obstructions 30.48 cm. (one foot) and under and all vertical walls over 30.48 cm (one foot) should be added to the square meter total. Dimensions and locations will be specified on the task order.	8,000	SM	
E840	**Installation of Inverted Insulated Roofing Systems.**	The Contractor shall perform the installation of inverted insulated roofing systems. Work includes installation of polymeric asphalt sheet roofing plies, polystyrene insulation and loose aggregate ballast, all as necessary so as to provide for a complete and functional roofing system. Typical details are shown on contract drawing PLATE # 13. All work shall be performed in accordance with Section 07 55 00. Unit of measurement shall be square meters (SM), as computed by multiplying, in meters, area length by width (L x W) , including all overlaps, overhangs, around roofing equipment/vents. Vertical walls and general obstructions 30.48 cm. (one foot) and under and all vertical walls over 30.48 cm (one foot) should be added to the square meter total. Dimensions and locations will be specified on the task order.	600	SM	
E841	**Installation of Crickets.**	The Contractor shall perform the installation of crickets at junctions of roof deck and vertical surfaces. All work shall be performed in accordance with Sections 03 52 00, 07 55 00 & 07 52 00, as applicable. Unit of measurement shall be linear meters (LM) of installed cricket. Dimensions and locations will be specified on the task order.	100	LM	
E842	**Installation of Expansion Joints.**	The Contractor shall perform the installation of neoprene expansion joints at junctions of roof decks and vertical surfaces. Typical details are shown on contract drawing PLATE # 9. All work shall be performed in accordance with Section 07 60 00. Unit of measurement shall be linear meters (LM) of installed expansion joints. Dimensions and locations will be specified on the task order.	200	LM	
E843	**Re-sealing of Expansion Joints.**	The Contractor shall perform the re-sealing of expansion joints with a silicone-rubber base mastic caulking. Existing joint caulking shall be completely removed and the surface area to receive new caulking shall be thoroughly cleaned and prepared. Typical details are shown on contract drawing PLATE # 9. All work shall be performed in accordance with Sections 07 60 00 & 07 92 00. Unit of measurement shall be linear meters (LM) of re-sealed expansion joint. Dimensions and locations will be specified on the task order.	320	LM	

ELIN	SHORT DESCRIPTION	FULL DESCRIPTION	EST QTY	UNIT OF ISSUE	UNIT PRICE (USD)
E844	**Forming of Slopes With Cellular Concrete.**	The Contractor shall perform the forming of slopes on existing concrete roof decks using cellular concrete. Averaged thickness of cellular concrete shall not exceed 10 cm. . Typical details are shown on contract drawing PLATES #'s 8, 9, 12, 13, 14, 15 & 16. All work shall be performed in accordance with Sections 07 55 00 & 07 52 00. Unit of measurement shall be square meters (SM), as computed by multiplying, in meters, area length by width (L x W) , including all overlaps, overhangs, around roofing equipment/vents. Vertical walls and general obstructions 30.48 cm. (one foot) and under and all vertical walls over 30.48 cm (one foot) should be added to the square meter total. Dimensions and locations will be specified on the task order.	1,000	SM	
E845	**Installation of Roof Mounted Duct and Equipment Supports.**	The Contractor shall perform the installation of roof mounted duct and equipment supports. Typical details are shown on contract drawing PLATE # 15. All work shall be performed in accordance with Section 07 60 00. Unit of measurement shall be each (EA) installed roof mounted duct and/or equipment supports. Quantities and locations will be specified on the task order.	10	EA	
E846	**Replacement of Drain Sumps and Strainers.**	The Contractor shall perform the replacement of existing drain sumps and strainers. Work , including demolition of existing concrete roof deck, removal of existing drain sump and strainer, installation of new roof drain sumps and strainers and patching of roof deck. Typical details are shown on contract drawing PLATE # 16. All work shall be performed in accordance with Section 07 60 00. Unit of measurement shall be each (EA) replaced roof drain sump and strainer. Quantities and locations will be specified on the task order.	10	EA	
E847	**Replacement of Pre-Cast Concrete Parapet Copings.**	The Contractor shall perform the replacement of pre-cast concrete parapet copings. Work includes demolition and removal of existing pre-cast concrete parapet roof copings, installation of new pre-cast concrete parapet copings, patching of parapet walls and repainting to match adjacent surfaces. Typical details are shown on contract drawing PLATES #'s 8 & 13. All work shall be performed in accordance with Section 03 31 01.00 10.Unit of measurement shall be linear meters (LM) of replaced pre-cast concrete parapet copings. Dimensions and locations will be specified on the delivery order. Unit of measurement shall be linear meters (LM) of replaced pre-cast concrete parapet copings. Dimensions and locations will be specified on the task order.	50	LM	
E848	**Installation of Pre-Cast Concrete Down Spout Splash Blocks.**	The Contractor shall perform the installation of pre-cast concrete down spout splash blocks. Typical details are shown on contract drawing PLATE # 10 . All work shall be performed in accordance with Section 03 31 01.00 10. Unit of measurement shall be each (EA) installed pre-cast concrete splash block. Quantities and locations will be specified on the task order.	10	EA	
E849	**Installation of Scupper Drains.**	The Contractor shall perform the installation of scupper drains in existing roof parapet walls. Typical details are shown on contract drawing PLATE # 16. All work shall be performed in accordance with Section 07 60 00. Unit of measurement shall be each (EA) installed scupper drain. Quantities and locations will be specified on the task order.	10	EA	

ELIN	SHORT DESCRIPTION	FULL DESCRIPTION	EST QTY	UNIT OF ISSUE	UNIT PRICE (USD)
E850	**Rubber Paint over Existing Roofing.**	The Contractor shall perform the application of rubber paint coating on existing pre-formed and/or corrugated metal sheet, asbestos-cement, concrete, and Ceramic Tiles roofs. Work includes application of rubber paint coating over existing roofing. All work shall be performed in accordance with Section 09 90 00. Unit of measurement shall be square meters (SM), as computed by multiplying, in meters, area length by width (L x W) , including all overlaps, overhangs, around roofing equipment/vents. Vertical walls and general obstructions 30.48 cm. (one foot) and under and all vertical walls over 30.48 cm (one foot) should be added to the square meter total. Dimensions and locations will be specified on the task order.	1,500	SM	
E851	**Emergency repairs for roofing leaks.**	The Contractor shall perform emergency repairs on roofing leaks within the limits threshold of 16 hours of labor and $3,000 of direct material cost. Emergency repairs shall be responded within 4 hours of the Government notification during Government regular working hours. If the emergency repair exceed the threshold contractor shall provide a Cost Proposal. Dimensions and locations will be specified on the task order. Contractor shall protect all the building interior area affected by the roof leak to prevent any damage.	10	EA	
E900	**Exterior Paint extending from the ground level up to 3.75 LM above ground level.**	The Contractor shall prepare the surface and paint in accordance with SECTION 09 90 00 Paints and Coatings, this ELIN includes all the exterior surfaces up to 3.75LM above ground level and comprise all the surfaces included in the paint tables of SECTION 09 90 00. Locations and paint colors will be specified on each the task order or shall match to the existing color. The measurement method is provided in J-1503040-04	10,000	SM	
E901	**Exterior Paint extending from 3.75LM above ground level up to 30LM above ground level.**	The Contractor shall prepare the surface and paint in accordance with SECTION 09 90 00 Paints and Coatings, this ELIN includes all the exterior surfaces from 3.75LM above ground level up to 30LM above ground level, and comprise all the surfaces included in the paint tables of SECTION 09 90 00. Locations and paint colors will be specified on each the task order or shall match to the existing color. The measurement method is provided in J-1503040-04.	20,000	SM	
E902	**Interior Paint extending from the floor level up to 3.75LM above ground level.**	The Contractor shall prepare the surface and paint in accordance with SECTION 09 90 00 Paints and Coatings, this ELIN includes all the interior surfaces up to 3.75LM above floor level and comprise all the surfaces included in the paint tables of SECTION 09 90 00. Locations and paint colors will be specified on each the task order or shall match to the existing color. The measurement method is provided in J-1503040-04.	15,000	SM	
E903	**Interior Paint extending from 3.75LM above floor level up to 30LM above floor level.**	The Contractor shall prepare the surface and paint in accordance with SECTION 09 90 00 Paints and Coatings, this ELIN includes all the interior surfaces up to 3.75LM above floor level and comprise all the surfaces included in the paint tables of SECTION 09 90 00. Locations and paint colors will be specified on each the task order or shall match to the existing color. The measurement method is provided in J-1503040-04.	30,000	SM	

ELIN	SHORT DESCRIPTION	FULL DESCRIPTION	EST QTY	UNIT OF ISSUE	UNIT PRICE (USD)
E1000	**Demolition and Removal of HTHW pipe lines with asbestos containing**	The Contractor shall perform the demolition and removal of the high temperature hot water (HTHW) pipe lines with asbestos containing insulation of any pipe diameter including the following activities: 1. Prepare and process a specific asbestos abatement plan in accordance to RD 396/2006 and AHERA standards. 2. Mobilize and demobilize the specific equipment required for asbestos work. 3. Move waste by authorized transportation means to the final waste managing facility. 4. Waste management by authorized landfill and provide disposal report. 5 Individual and environmental sample taking and testing as per AHERA. 6. Pipes ends sections shall be encapsulated. All work shall be performed in accordance with specification section 02 82 16.00 20, "ENGINEERING CONTROL OF ASBESTOS CONTAINING MATERIALS". Encapsulate Road intersections will be ordered separately. Concrete footing and metal bridges will remain on site.	10,000	LM	
E1001	**Demolition and Removal of HTHW pipe lines without Asbestos Containing**	The Contractor shall perform the demolition and removal of the high temperature hot water (HTHW) pipe lines any pipe diameters including the following activities: 1. Before start demolition, Test to assure that no asbestos is present. If there is any hazardous material do not touch it and inform immediately to the Performance Assessment Representative (PAR). 2. Mobilize and demobilize the specific equipment required for the work. 3. Move waste by authorized transportation means to the final waste managing facility in accordance with the National Spanish Regulations. Concrete footing and metal bridges will remain on site. Pipes ends sections shall encapsulated in accordance with the section 0282160020. To encapsulate Road intersections will be ordered separately.	5,000	LM	
E1002	**Encapsulate End Pipes at road intersections**	Encapsulation shall be conformed to current USEPA requirements, shall contain no toxic or hazardous substances as defined in 29 CFR 1926.59, and shall conform with performance requirements indicated in section 02 82 16.00 20, "ENGINEERING CONTROL OF ASBESTOS CONTAINING MATERIALS" .	20	EA	
E1000	**Unit Priced Un-Skilled Labor Work (negotiated)**	Includes all labor and supervision required to perform miscellaneous un-skilled work. Unskilled labor includes, but is not limited to the following types of trades: Laborer, Small Equipment Operator, Helper, etc. Dimensions and locations will be specified on the task order.	600	HR	
E1001	**Miscellaneous Costs (negotiated)**	Includes all materials, equipment, and subcontracted effort required to perform miscellaneous work. Costs for materials, equipment, and subcontractor effort, not covered under any UPT, shall be negotiated as required for each task order. Units, dimensions, and locations will be specified on the task order.	1	LOT	

SECTION 02 41 00

DEMOLITION

PART I - GENERAL

1.1 REFERENCES: The publications listed below form a part of this specification to the extent referenced. The publications, if referenced in the text, are by basic designation only. The latest edition of the referenced publications shall govern.

1.1.1 JEFATURA DEL ESTADO (MADRID, SPAIN)

Ley 31/1995	Ley de Prevención de Riesgos Laborales
RD 1627/1997	Disposiciones Minimas de Seguridad y Salud en las Obras de Construccion

1.1.2 CENTRO DE PUBLICACIONES DEL MINISTERIO DE FOMENTO (MF):

PG-3, Art. 301	Pliego de Prescripciones Tecnicas Generales para Obras de Carreteras y Puentes. Demoliciones
NTE-ADD	Demoliciones

1.1.3 MINISTERIO DE TRABAJO Y ASUNTOS SOCIALES (MTAS)

MTAS 1	Ordenanza de Seguridad e Higiene en el Trabajo
MTAS-ORD	Reglamento de Seguridad e Higiene en el Trabajo en la Industria de la Construcción
MTAS 108	Prevención y Reducción de la Contaminación del Medio Ambiente Producida por el Amianto

1.1.4 U.S. ARMY CORPS OF ENGINEERS (USACE)

EM 385-1-1	Safety - Safety and Health Requirements Manual

1.2 GENERAL REQUIREMENTS:

Do not begin demolition until authorization is received from the Contracting Officer. Remove rubbish and debris from the project site; do not allow accumulations of rubbish or debris. Store materials that cannot be removed daily in areas specified by the Contracting Officer. Demolish and remove materials containing asbestos in accordance with Section 02 82 14.00 10, titled "REMOVAL AND DISPOSAL OF CORRUGATED ASBESTOS-CEMENT SHEET ROOFING."

1.3 SUBMITTALS: Submit the following in accordance with Section 01 33 00, titled "SUBMITTALS PROCEDURES":

1.3.1 Statements:

a. Demolition Plan: Submit proposed demolition and removal procedures for approval before work is started.

1.3.1.1 Required Data: Demolition plan shall include procedures for removal and disposition of materials, coordination with other work in progress, a disconnection schedule of utility services, as applicable, and a detailed description of methods and equipment to be used for each operation and of the sequence of operations.

1.4 REGULATORY AND SAFETY REQUIREMENTS: Comply with federal, state, and local hauling and disposal regulations. In addition to the requirements of the "Contract Clauses," safety requirements shall conform to MTAS-ORD and MTAS 1.

1.5 DUST AND DEBRIS CONTROL: Prevent the spread of dust and debris and avoid the creation of a nuisance or hazard in the surrounding area. Do not use water if it results in hazardous or objectionable conditions such as, but not limited to, ice, flooding, or pollution. Sweep pavements as often as necessary to control the spread of debris that may result in foreign object damage potential to vehicle traffic.

1.6 PROTECTION:

1.6.1 Traffic Control Signs: Where pedestrian and driver safety is endangered in the area of removal work, use traffic barricades with flashing lights. Notify the Contracting Officer prior to beginning such work.

1.6.2 Existing Work: Protect existing work which is to remain in place, be reused, or remain the property of the Government. Repair items which are to remain and which are damaged during performance of the work, to their original condition, or replace with new. Do not overload pavements to remain. Provide new supports and reinforcement for existing construction weakened by demolition or removal work. Repairs, reinforcement, or structural replacement shall have Contracting Officer approval.

1.6.3 Weather Protection: For portions of the building to remain, protect building interior and materials and equipment from the weather at all times.

1.6.4 Trees: Conform to Section 01 57 20.00 10, "Environmental Protection," for protection of natural resources.

1.6.5 Facilities: Protect electrical and mechanical services and utilities. Where removal of existing utilities and pavement is specified or indicated, provide approved barricades, temporary covering of exposed areas, and temporary services or connections for electrical and mechanical utilities.

1.7 BURNING: Burning will not be permitted.

1.8 FOREIGN OBJECT DAMAGE (FOD): Aircraft and aircraft engines are subject to FOD from debris and waste material lying on airfield pavements. Remove all such materials that may appear on operational aircraft pavements due to the Contractor's operations. If necessary, the Contracting Officer may require the Contractor to install a temporary barricade at the Contractor's expense to control the spread of FOD potential debris. The barricade shall consist of a fence covered with a fabric designed to stop the spread of debris; anchor the fence and fabric to prevent displacement by winds or jet/prop blasts. Remove barricade when no longer required.

1.9 RELOCATIONS: Perform the removal and reinstallation of relocated items as indicated with workmen skilled in the trades involved. Repair items to be relocated which are damaged or replace damaged items with new undamaged items as approved by the Contracting Officer.

PART II - PRODUCTS: Not used.

PART III - EXECUTION

3.1 EXISTING FACILITIES TO BE REMOVED:

3.1.1 Structures: Remove indicated existing structures to grade.

3.1.2 Utilities and Related Equipment: Remove existing utilities, as indicated and terminate in a manner conforming to the nationally recognized code covering the specific utility and approved by the Contracting Officer. Remove meters and related

equipment and deliver to a location in accordance with instructions of the Contracting Officer. If utility lines are encountered that are not shown on drawings, contact the Contracting Officer for further instructions.

3.1.2.1 Excavation: As determined in Section 31 23 00.00 20.

3.1.3 Paving: Remove sawcut asphaltic concrete paving including aggregate base as indicated to a depth of 12 inches below new finish grade. Provide neat sawcuts at limits of pavement removal as indicated.

3.1.4 Concrete: Saw concrete along straight lines to a depth of not less than 15.24 cm (6 in). Break out the remainder of the concrete provided that the broken area is concealed in the finished work, and the remaining concrete is sound. At locations where the broken face cannot be concealed, grind smooth or saw cut entirely through the concrete.

3.1.5 Patching: Where removals leave holes and damaged surfaces exposed in the finished work, patch and repair these holes and damaged surfaces to match adjacent finished surfaces. Where new work is to be applied to existing surfaces, perform removals and patching in a manner to produce surfaces suitable for receiving new work. Finished surfaces of patched area shall be flush with the adjacent existing surface and shall match the existing adjacent surface as closely as possible as to texture and finish. Patching shall be as specified and indicated.

3.1.6 Concrete Wheel Stops: Concrete wheel stops shall be removed, by the Contractor, from the work area and stored on-site for reinstallation. Wheel stops that are damaged and broken shall be removed and disposed of by the Contractor, as directed by the Performance Assessment Representative (PAR). When reinstalled, wheel stops shall be anchored in-place with two 45 cm (18 in) steel pins.

3.1.7 Concrete Curbs: Remove concrete curbs from the edge of roads, slabs and walkways, including the remaining concrete bedding, and dispose of all debris.

3.1.8 Roofing: Remove roofing and insulation without damaging the roof deck.

3.1.9 Cement-Asbestos Roofing: Remove cement-asbestos sheets in their entirety. Removal work shall be done by removal of sheet fasteners only. Cement-asbestos sheets shall not be cut or broken during removal. Dispose of cement-asbestos sheets in accordance with Section 02 82 14.00 10, titled "REMOVAL AND DISPOSAL OF CORRUGATED ASBESTOS-CEMENT SHEET ROOFING."

3.2 DISPOSITION OF MATERIAL:

3.2.1 Title to Materials: Except where specified in other sections, all materials and equipment removed, and not reused, shall become the property of the Contractor and shall be removed from Government property. Title to materials resulting from demolition, and materials and equipment to be removed, is vested in the Contractor upon approval by the Contracting Officer of the Contractor's demolition and removal procedures, and authorization by the Contracting Officer to begin demolition. The Government will not be responsible for the condition or loss of, or damage to, such property after notice to proceed. Materials and equipment shall not be viewed by prospective purchasers or sold on the site.

3.2.2 Reuse of Materials and Equipment: Remove and store materials and equipment indicated, as applicable, to be reused or relocated to prevent damage, and reinstall as the work progresses, as directed.

3.2.3 Salvaged Materials and Equipment: Remove materials and equipment that are indicated, as applicable, to be removed by the Contractor and that are to remain the property of the Government, and deliver to a storage site on the Naval Station, as directed.

3.2.4 Disposal of Rubbish and Debris: All debris generated in conjunction with execution of the contract requirements shall be removed from the Naval Station and shall be disposed of in accordance with all applicable local, regional and national laws and regulations.

3.2.5 Salvage of Existing Materials and Equipment: Existing materials and equipment which are required to be removed or disconnected to perform the work, but are not indicated or specified for use in the new work, shall remain the property of the Government and shall be transported to storage areas on the station where directed by the Contracting Officer. Likewise, items indicated to be salvaged shall remain the property of the Government, and if not indicated to be reused in the new work shall be transported to storage areas on the station where directed by the Contracting Officer.

3.3 CLEANUP:

3.3.1 Debris and Rubbish: Remove and transport debris and rubbish in a manner that will prevent spillage on pavements, streets or adjacent areas. Clean up spillage from pavements, streets and adjacent areas to prevent FOD potential. Conform to other applicable requirements under Section 01 57 20.00 10, titled "Environmental Protection".

***** END OF SECTION *****

SECTION 03 31 01.00 10

CAST IN PLACE CONCRETE (MINOR CONSTRUCTION)

PART I - GENERAL

1.1 REFERENCES: The publications listed below form a part of this specification to the extent referenced. The publications, if referenced in the text, are by basic designation only. The latest edition of the referenced publications shall govern.

1.1.1 MINISTERIO DE FOMENTO (MF):

MF EHE	Instrucción de Hormigón Estructural.

1.1.2 NORMAS TECNOLOGICAS DE LA EDIFICACION (NTE):

NTE-QAN / 1973.	Norma tecnológica de la edificación. Cubiertas: azoteas no transitables.

1.1.3 NORMAS TECNOLOGICAS DE LA EDIFICACION (NTE):

NTE-EHS / 1976.	Norma tecnológica de la edificación. Estructuras de hormigón armado: Soportes.

PART II - PRODUCTS

2.1 CONCRETE

2.1.1 Pre-Cast Concrete Items: Concrete shall be in accordance with EH-91 Concrete shall have a 28 day compressive strength of 210 kg/cm2.

2.1.2 Cast In Place Cellular Concrete: Cellular concrete shall conform to the requirements as specified in Section 03 52 00 titled "LIGHTWEIGHT CONCRETE ROOF INSULATION".

2.2 MATERIALS:

2.2.1 Cement: Portland PA-350 cement, for all concrete. All cement for exposed concrete surfaces shall be of the same manufacture.

2.2.2 Water: Water shall be clean, fresh and potable.

2.2.3 Aggregate: Conforming to UNE-EN 12620. Aggregate shall not contain any substance which may be deleteriously reactive with the alkalis in the cement. Maximum coarse aggregate size shall be 12 mm.

2.2.4 Workability: The concrete shall be of such consistency that it can be readily worked into corners and angles of formwork and around the reinforcing without permitting the material to segregate or free water to collect at the surface.

2.2.5 Formwork: All formwork used for precast concrete shall be smooth faced material. Plywood or metal formwork may be used.

2.2.6 Reinforcing Bars: Reinforcement shall be deformed bars conforming to UNE 41.115. Minimum concrete cover for reinforcement shall be 4 cms.

PART III - EXECUTION

3.1 PRE-CAST CONCRETE:

3.1.1 Splash Blocks: Splash blocks shall be provided at outlets of downspouts emptying at grade. Splash blocks shall be precast concrete, measuring 61 cm x 30 cm x 10 cm (24 x 12 x 4 inches), with smooth-finished countersunk dishes sloped to drain at one end, installed on compacted earth base.

3.1.2 Concrete Parapet Copings: All exposed surfaces shall be smooth and true with sharp edges. Parapet copings shall match existing coping dimensions. Suitable provisions shall be made for anchoring coping sections to walls, set in full bed of Portland cement mortar. All vertical joints shall be grouted. Copings shall be provided with drips, where necessary, for proper drainage.

3.1.3 Curing: Precast concrete items shall be damp cured for not less than 7 days and allowed to dry out before being moved.

3.1.4 Damaged Precast Concrete Items: Cracked or broken precast concrete items will not be acceptable. Small chips on concealed surfaces will be acceptable provided they do not affect the strength of precast concrete item.

3.2 CAST IN PLACE CONCRETE:

3.2.1 Crickets: Crickets shall be constructed to dimensions as specified.

END OF SECTION

SECTION 03 33 00

CAST-IN-PLACE ARCHITECTURAL CONCRETE

PART I - GENERAL

1.1 REFERENCES: The publications listed below form a part of this specification to the extent referenced. The publications are referred to in the text by the basic designation only. The latest edition of the referenced publications shall govern.

1.1.1 UNA NORMA ESPANOLA (UNE):

UNE 36068	Ribbed bars of weldable steel for the reinforcement of concrete.
UNE 36092	Steel Welded Fabric for Concrete Reinforcing.
UNE 36099	Deformed Steel Wires for Concrete Reinforcing.
UNE 36731	Plain Steel Wire For Welded Fabric and Latticce Girders.
UNE-EN 197-1	Cement - Part 1: Composition, Specifications And Conformity Criteria For Common Cements.
UNE-EN 12350-1	Testing Fresh Concrete - Part 1: Sampling.
UNE-EN 934-2	Admixtures For Concrete, Mortar And Grout - Part 2: Concrete Admixtures - Definitions, Requirements, Conformity, Marking And Labelling.
UNE-EN 12390-3	Testing Hardened Concrete - Part 3: Compressive Strength Of Test Specimens.
UNE 104231	Waterproofing. Bituminous And Bituminous Modified Materials. Asphalt Emulsions.
UNE 104233/1M	Waterproofing. Bituminous and bituminous modified materials. Bituminous joint sealant or filler for concrete.
UNE-EN 933-1	Test For Geometrical Properties Of Aggregates. Part 1: Determination Of Particle Size Distribution. Sieving Method.
UNE 7050-1	Test Sieves And Test Sieving. Vocabulary.
UNE 7050-2	Test Sieves. Metal Wire Cloth, Perforated Metal Plate And Electroformed Sheet. Nominal Size Of Openings.
UNE-EN 12620	Aggregates For Concrete.
UNE 41126	Compatibility Of Concrete In Mixtures
UNE 81501	Safety Signs In Working Places.
UNE 41124	Proteccion De Morteros Y Hormigones, Contra Los Agentes Agresivos.
UNE 41121	Requirements Of Water For The Pugging And Curving Of Concretes.
UNE 53254-1	Plastics. Specification For Polyethylene Films Used In Building Industries.

UNE-EN 932-2	Tests For General Properties Of Aggregates. Part 2: Methods For Reducing Laboratory Samples.
UNE-EN 12350-1	Testing Fresh Concrete - Part 1: Sampling.
UNE-EN 12390-2	Testing Hardened Concrete - Part 2: Making And Curing Specimens For Strength Tests.
UNE-EN 12504-1	Testing Concrete In Structures - Part 1: Cored Specimens - Taking, Examining And Testing In Compression.
UNE-EN 12390-3	Testing Hardened Concrete - Part 3: Compressive Strength Of Test Specimens.
UNE 83311	Tests Of Concrete. Determination Of Setting Time.
UNE 41107	Prefabricated Products, Slastics And Of Low Transversal Dilatation For The Filling Of Expansion Joints In Concrete Pavings.
UNE 53254-2	Plastics. Instruction To Use Polyethylene Films In Building.
UNE-EN 287-1	Qualification test of welders – Fusion welding - Part 1: Steels.
UNE-EN 1011-1	Welding - Recommendations for welding of metallic materials - Part 1: General guidance for arc welding

1.1.2 MINISTERIO DE FOMENTO(MF):

EH-91	Instruccion para el Proyecto y Ejecucion de Obras de Hormigon en Masa o Armado.
PG-3, Art. 610	Pliego de Prescripciones Tecnicas Generales para Obras de Carreteras y Puentes. Hormigones.
PG-3, Art. 570	Pliego de Prescripciones Tecnicas Generales. para Obras de Carreteras y Puentes. Bordillos.
PG-3, Art. 202	Pliego de Prescripciones Tecnicas Generales para Obras de Carreteras y Puentes. Cementos.
PG-3, Art. 280	Pliego de Prescripciones Tecnicas Generales para Obras de Carreteras y Puentes. Agua a emplear en Morteros y Hormigones.
PG-3, Art. 600	Pliego de Precripciones Tecnicas generales para Obras de Carreteras y Puentes. Armaduras a Emplear en Hormigon Armado.
RC-03	Pliego de Prescripciones Tecnicas Generales para la Recepcion de Cementos.
EH-PRE-72	Instruccion para la Fabricacion y Suministro de Hormigon Preparado.
EHE-98	Instruccion del Hormigon Estructural.

1.1.3 AMERICAN ASSOCIATION OF STATE HIGHWAY AND TRANSPORTATION OFFICIALS (AASHTO):

AASHTO M182	Burlap Cloth Made from Jute or Kenaf

1.1.4 AMERICAN WELDING SOCIETY, INC. (AWS):

AWS D1.4	Structural Welding Code Reinforcing Steel

1.2 SUBMITTALS: Submit the following in accordance with Section 01 30 00, titled "SUBMITTALS PROCEDURES."

1.2.1 Certificates:
- a. Cement
- b. Aggregates
- c. Vapor Barrier
- d. Expansion-joint filler
- e. Joint sealant
- f. Reinforcing bars
- g. Welded Wire Fabric

1.3 DELIVERY: Do not deliver concrete until ready for placement. Store reinforcement of different sizes and shapes in separate piles or racks raised above the ground to avoid excessive rusting. Protect from contaminants such as grease, oil, and dirt. Ensure bar sizes can be accurately identified after bundles are broken and tags removed.

1.4 STORAGE: Store concrete aggregates to prevent contamination or segregation. Store reinforcement of different sizes and shapes in separate piles or racks raised above the ground to avoid excessive rusting. Protect from contaminants such as grease, oil, and dirt. Provide for accurate identification after bundles are broken and tags removed.

PART II - PRODUCTS

2.1 CONCRETE:

2.1.1 Contractor Mix Design: Design in accordance with EH-91, Article 610. Concrete shall have a 28 day compressive strength of: 210 Kg/cm^2. Slump shall be between 2.5 and 7.5 cm (2 and 4 in). Water-cement ratio shall not exceed 0.60.

2.1.2 Ready-Mixed Concrete: EH-PRE, except as modified herein. Ready-mixed concrete is defined in this specification as concrete produced regularly by a commercial establishment and delivered to the purchaser in the plastic state.

2.2 MATERIALS:

2.2.1 Cement: MF PG3, Art. 202 and UNE-EN 197-1. Portland cement P-350 for all concrete work. For concrete exposed to the elements, use one cement manufacturer only.

2.2.2 Water: MF PG3, Art. 280 and UNE 41121. Water shall be fresh, clean, and potable; free from injurious amounts of oils, acids, alkalis, salts, organic materials, or other substances deleterious to concrete.

2.2.3 Aggregates: MF PG3, Art. 610, UNE 83101. Obtain aggregates for exposed concrete surfaces from one source. Aggregates shall not contain any substance which may be deleteriously reactive with the alkalies in the cement.

2.2.4 Admixtures: None.

2.2.5 Aggregate Sub-Base: Where required, aggregate sub-base material shall conform Section 32 11 24 titled "GRADED CRUSHED AGGREGATE BASE COURSE FOR FLEXIBLE PAVEMENT.

2.2.6 Materials for Curing Concrete:

2.2.6.1 Pervious Sheeting: PG3, Art. 610, and AASHTO M182. Burlap cloth made from jute.

2.2.7 Expansion/Contraction Joint Filler: Art. 610, UNE 41107, 1.3 cm (1/2 in) thick.

2.2.8 Joint Sealant: UNE 104233.

2.2.9 Vapor Barrier: UNE 53254 polyethylene sheeting, minimum 0.15 mm(6 mil) thickness.

2.2.10 Precast Concret Curb: H-400 beveled 17 x 28 cm.

2.3 REINFORCEMENT

2.3.1 Reinforcing Bars: UNE 36088 and MF PG-3, Art.241. All bars shall be deformed steel. Size as indicated on contract drawings.

2.3.2 Welded Wire Fabric: UNE 36092 and MF PG-3, Art. 242. Size as indicated on contract drawings.

2.3.3 Mechanical Reinforcing Bar Connectors: MF PG-3. Provide 125 percent minimum yield strength of the reinforcement bar.

2.3.4 Wire: UNE 36099 and MF PG-3, Art. 242.

2.3.5 Reinforcing Bar Supports: MF PG-3. Provide bar ties and supports of coated or noncorrodible material.

PART III - EXECUTION

3.1 PLACING REINFORCEMENT AND MISCELLANEOUS MATERIALS: Where required. Provide bars, wire fabric, wire ties, supports, and other devices necessary to install and secure reinforcement. Reinforcement shall not have rust, scale, oil, grease, clay, or foreign substances that would reduce the bond. Rusting of reinforcement is a basis of rejection if the effective cross-sectional area or the nominal weight per unit length has been reduced. Remove loose rust prior to placing steel. Tack welding is prohibited.

3.1.1 Setting Miscellaneous Material: Place and secure anchors and bolts, pipe sleeves, conduits, and other such items, as applicable, in position before concrete placement. Plumb anchor bolts and check location and elevation. Temporarily fill voids in sleeves with readily removable material to prevent the entry of concrete. Miscellaneous materials will be government furnished items.

3.1.2 Construction Joints: Continue reinforcement across joints, unless otherwise indicated.

3.1.3 Expansion Joints and Contraction Joints: For slabs on grade, provide expansion joint at edges of interior floor slabs, abutting vertical surfaces, adjacent to walls, and as indicated. Make expansion joints 13 mm (1/2 in) wide. Fill expansion joints not exposed to weather with preformed joint material. Seal joints exposed to weather with joint sealant. Do not extend reinforcement or other embedded metal items bonded to the concrete through any expansion joint, unless an expansion sleeve is used. Provide contraction joints, either formed or saw cut or cut with a jointing tool to the indicated depth after the surface has been finished. Sawed joints shall be completed within 4 to 12 hours after concrete placement. Protect joints from intrusion of foreign matter.

3.1.4 Vapor Barrier: Provide beneath the on-grade concrete floor slab. Use the greatest widths and lengths practicable to eliminate joints wherever possible. Lap joints a minimum of 30 cm (12 inches). Remove torn, punctured, or damaged vapor barrier material and provide with new vapor barrier prior to placing concrete. Concrete placement shall not damage vapor barrier material.

3.1.5 Reinforcement Supports: Place reinforcement and secure with galvanized or noncorrodible chairs, spacers, or metal hangers. For supporting reinforcement on the ground, use concrete or other noncorrodible material, having a compressive strength equal to or greater than the concrete being placed.

3.1.6 Splicing: MF PG-3, Art. 600. Do not splice at points of maximum stress. Overlap welded wire fabric the spacing of the cross wires, plus 50 mm (2 inches). AWS D1.4. Welded splices shall be approved prior to use.

3.1.7 Future Bonding: Plug exposed, threaded, mechanical reinforcement bar connectors with a greased bolt. Bolt threads shall match the connector. Countersink the connector in the concrete. Calk the depression after the bolt is installed.

3.1.8 Cover: Cover: MF PG-3, Art. 600 for minimum coverage, unless otherwise indicated.

3.2 BATCHING, MIXING AND TRANSPORTING: MF EH-91, Article 610. Furnish mandatory batch ticket information for each load of ready mix concrete.

3.2.1 Mixing: MF EH-91, Article 610. Machine mix concrete and provide mandatory batch ticket information for each load of ready mix concrete. Begin mixing within 30 minutes after the cement has been added to the aggregates. Place concrete within 90 minutes of either addition of mixing water to cement and aggregates or addition of cement to aggregates if the air temperature is less than 29° C (85° F). Reduce mixing time to 60 minutes if the air temperature is greater than 29° C (85° F). Additional water may be added, provided that both the specified maximum slump and water-cement ratio are not exceeded. When additional water is added, an additional 30 revolutions of the mixer at mixing speed is required.

3.2.2 Transporting: Transport concrete from the mixer to the forms as rapidly as practicable. Prevent segregation or loss of ingredients. Clean transporting equipment thoroughly before each batch. Do not use aluminum pipe or chutes. Remove concrete which has segregated in transporting and dispose of as directed.

3.3 PLACING CONCRETE: Place concrete as soon as practicable after the forms and the reinforcement have been inspected and approved. Do not place concrete when weather conditions prevent proper placement and consolidation; in uncovered areas during periods of precipitation; or in standing water. Prior to placing concrete, remove dirt, construction debris, and water from within the forms. Concrete shall be conveyed from the mixer to the forms as rapidly as practicable, by methods which prevent segregation or loss of ingredients. Concrete shall be in place within 15 minutes after discharge from the mixer. Concrete shall be deposited as close as possible to its final position in the forms and be so regulated that it may be effectively consolidated in horizontal layers 45.72 cm (18 in) or less in thickness. The placement shall be carried on at such a rate that the formation of cold joints will be prevented.

3.3.1 Vibration: Consolidate concrete slabs greater than 10 cm (4 in) depth with high frequency, internal, mechanical vibrating equipment supplemented by hand spading and tamping. Consolidate concrete slabs 10 cm or less in depth by tamping, spading, and settling with a heavy leveling straight edge. Operate vibrators with vibratory element submerged in the concrete, with a minimum frequency of not less than 6000 impulses per minute when submerged. Do not use vibrators to transport the concrete in the forms. Insert and withdraw vibrators approximately 50 cm (18 inches) apart. Penetrate the previously placed lift with the vibrator when more than one lift is required. Place concrete in 50 cm (18 inch) maximum vertical lifts. External vibrators shall be used on the exterior surface of the forms when internal vibrators do not provide adequate consolidation of the concrete.

3.3.2 Cold Weather: Do not allow concrete temperature to decrease below 10 degrees C (50 degrees F). Obtain approval prior to placing concrete when the ambient temperature is below 4 degrees C (40 degrees F). Cover concrete and provide sufficient heat to maintain 10 degrees C (50 degrees F) minimum adjacent to both the formwork and the structure while curing. Limit the rate of cooling to 3 degrees C (5 degrees F) in any 1 hour and 10 degrees C (50 degrees F) per 24 hours after heat application.

3.3.3 Hot Weather: Concrete temperature from initial mixing through final cure shall not exceed 32° C (90° F). Cool ingredients before mixing or use other suitable means to control concrete temperature and prevent rapid drying of newly placed concrete. Shade the fresh concrete as soon as possible after placing. Start curing when the surface of the fresh concrete is sufficiently hard to permit curing without damage. Provide water hoses, pipes, spraying equipment, and water hauling equipment, where job site is remote to water source, to maintain a moist concrete surface throughout the curing period. Provide burlap cover or other suitable, permeable material with fog spray or continuous wetting of the concrete when weather conditions prevent the use of either liquid membrane curing compound or impervious sheets. For vertical surfaces, protect forms from direct sunlight and add water to top of structure once concrete is set.

3.4 SURFACE FINISHES EXCEPT FLOOR, SLAB, AND PAVEMENT FINISHES:

3.4.1 Defects: Repair formed surfaces by removing minor honeycombs, pits greater than 6 cm^2 (1 in^2) surface area or 6 mm (0.25 inch) maximum depth, or otherwise defective areas. Provide edges perpendicular to the surface and patch with non-shrink grout. Patch tie holes and defects when the forms are removed. Concrete with extensive honeycomb (including exposed steel reinforcement, cold joints, entrapped debris, separated aggregate, or other defects) which affect the serviceability or structural strength will be rejected, unless correction of defects is approved. Obtain approval of corrective action prior to repair. Exposed surfaces shall be uniform in appearance and finished to a smooth form finish.

3.5 FLOOR, SLAB, AND PAVEMENT FINISHES AND MISCELLANEOUS CONSTRUCTION: Slope floors uniformly to drains where drains are provided. Slope floors to exterior edges for exterior slabs.

3.5.1 Finish: Place, consolidate, and immediately strike off concrete to obtain proper contour, grade, and elevation before bleed-water appears. Permit concrete to attain a set sufficient for floating and supporting the weight of the finisher and equipment. If bleed-water is present prior to floating the surface, drag the excess water off or remove by absorption with porous materials. Do not use dry cement to absorb bleed-water.

3.5.1.1 Floated: Use for exterior slabs where not otherwise specified. After the concrete has been placed, consolidated, struck off, and leveled, do not work the concrete further, until ready for floating. Whether floating with a wood, magnesium, or composite hand float, with a bladed power trowel equipped with float shoes, or with a powered disc, float shall begin when the surface has stiffened sufficiently to permit the operation. During or after the first floating, surface shall be checked with a 3 meter (10 foot) straightedge applied at no less than two different angles, one of which is perpendicular to the direction of strike off. High spots shall be cut down and low spots filled during this procedure to produce a surface level within 6 mm in 3 m (1/4 inch in 10 feet).

3.5.1.2 Broomed: Provide for exterior walks, platforms, patios, and ramps, unless otherwise indicated. Provide a floated finish, then finish with a flexible bristle broom. Permit surface to harden sufficiently to retain the scoring or ridges. Broom transverse to traffic or at right angles to the slope of the slab.

3.5.1.3 Pavement: Screed the concrete with a template advanced with a combined longitudinal and crosswise motion. Maintain a slight surplus of concrete ahead of the template. After screeding, float the concrete longitudinally. Use a straight edge to check slope and flatness; correct and re-float as necessary. Obtain final finish by a burlap drag. Drag a strip of clean, wet burlap from 90 to 300 cm wide and 60 cm (3 to 10 feet wide and 2 feet) longer than the pavement width across the slab. Produce a fine, granular, or sandy textured surface, as specified, without disfiguring marks. Round edges and joints with an edger having a radius of 3 mm (1/8 in).

3.5.2 Concrete Side Walks: Provide 10 cm (4 inches) thick minimum as indicated on contract drawing, Plate # 18. Provide control joints spaced every 1.5 linear m (5 linear feet). Cut control joints 2.5 cm (1 in) deep with a jointing tool after the surface has been finished. Provide 1.3 cm (0.5 in) thick transverse expansion joints at changes in direction, where sidewalk abuts curb, steps, rigid pavement, or other similar structures; space expansion joints every 15 m (50 feet) maximum. Give walks a broomed finish. Provide a transverse slope of 2% ((2 cm per 1 m (1/4 in/ft)). Limit variation in cross section to 6 mm in 1.5 m (1/4 inch in 5 feet).

3.5.3 Manholes and Catch Basins: Place bottoms monolithically with walls or provide waterstops and keys.

3.5.3 Rip-Rap Channel Lining Mortar: 1 part portland cement with five parts sand.

3.5.4 Concrete Wheel Stops: Constructed to dimensions as indicated on contract drawing PLATE # 14.

3.5.5 Precast Concrete Curbs: Install precast concrete curbs on H-100, II-./35 (PA-350) concrete bedding and join with II-./35 (PA-350) cement and river sand, 1:1 mortar, conforming to NTE/RSP-17 and MF PG-3, art. 570.

3.7 CURING AND PROTECTION: Begin curing immediately following form removal. Avoid damage to concrete from vibration created by blasting, pile driving, movement of equipment in the vicinity, disturbance of formwork or protruding reinforment, and any other activity resulting in ground vibrations. Protect concrete from injurious action by sun, rain, wind, flowing water, mechanical injury, tire marks, and oil stains. Do not allow concrete to dry out from time of placement until the expiration of the curing period. Forms may be removed 48 hours after concrete placement.

3.6.1 Curing Periods: Allow 7 days.

3.7 SAMPLING AND TESTING:

3.7.1 Testing:

3.7.2.1 Slump Tests: UNE 83311. Take samples during concrete placement. Perform tests at commencement of concrete placement and for each batch (minimum) or every 6.03 cubic meters (8 cubic yards) maximum of concrete.

3.7.2.2 Compressive Strength Tests: Make five test cylinders for each set of tests in accordance with UNE-EN 12390-2. Test, in accordance with UNE-EN 12390-3, two cylinders at 7 days and two cylinders at 28 days, and hold one cylinder in reserve. Samples for strength tests shall be taken not less than once a day. Each strength test result shall be the average of two cylinders from the same concrete sample tested at 28 days. Remove concrete not meeting required strength criteria and provide new acceptable concrete.

***** END OF SECTION *****

SECTION 03 52 00

LIGHTWEIGHT CONCRETE ROOF INSULATION

PART I - GENERAL

1.1 REFERENCES: The publications listed below form a part of this specification to the extent referenced. The publications, if referenced in the text, are by basic designation only. The latest edition of the referenced publications shall govern.

1.1.1 AMERICAN SOCIETY FOR TESTING AND MATERIALS (ASTM):

ASTM C 150	Portland Cement
ASTM C 332	Lightweight Aggregates for Insulating Concrete

1.1.2 NORMAS TECNOLOGICAS DE LA EDIFICACION (NTE):

NTE-QAN / 1973.	Norma tecnológica de la edificación. Cubiertas: Azoteas no transitables.

1.2 QUALIFICATIONS OF APPLICATOR: Perform work by or under the supervision of personnel specializing in insulating concrete application and having not less than 2 years experience.

1.3 SUBMITTALS: Submit the following in accordance with Section 01 33 00, titled "Submittal procedure":

1.3.1 Manufacturer's Catalog Data:

a. Performance Requirements: Submit, indicating compressive strength, oven dry density, and coefficient of heat transmission of cellular concrete.

b. Insulation.

1.3.2 Instructions:

a. Cellular Concrete Application Instructions.

b. Roof insulation.

1.3.3 Test Reports:

a. Performance Requirements: Submit certified test reports on laboratory testing of insulating concrete samples taken at time of placement.

1.3.4 Manufacturer's Descriptive Data: Provide manufacturer's descriptive product data for the following:

a. Aggregate.
b. Cement.
c. Expansion joint filler material.
d. Insulation board.
e. Performance requirements.
f. Compatibility of materials.
g. Foaming agents.

1.3.4.1 Fabricator's Compatibility Certificates: Submit a written statement from the insulating concrete fabricator certifying that materials for this project are chemically and physically compatible.

1.3.5 Samples: Provide samples, in the sizes indicated of the following:

a. **Insulation Board:** 30.5 cm x 30.5 cm (12 x 12 inch) piece.

b. **Woven Wire Fabric:** 30.5 cm x 30.5 cm (12 x 12 inch) piece.

1.4 DELIVERY AND STORAGE: Deliver all materials to the building site in original unopened, undamaged packages or containers, or approved bulk handling equipment, with manufacturer's brand name and contents clearly identified. Protect materials against dampness during shipment and after delivery. Store materials under cover and off the ground, in well ventilated areas, not exposed to extreme changes of temperature and humidity, and in a manner to prevent deterioration or intrusion of foreign substances. Keep materials dry until ready for use. Protect metal components from rusting.

1.5 ENVIRONMENTAL CONDITIONS:

1.5.1 Normal Conditions: When ambient air temperatures of 4.5^{O} C (40° F) or above are predicted for the initial 24 to 72 hours after placement of insulating concrete, the use of hot water and other cold weather protection measures are not required.

1.5.2 Cold Weather Conditions: When ambient air temperature at time of placing insulating concrete is between 4.5^{O} to 0° C (40° to 32° F), use hot water. Water shall be in temperature range of 32.2 to 49° C (90° to 120° F) at the point of placement. When ambient air temperatures of 0° C (32° F) or below are predicted for the initial 24 to 72 hours after placement of insulating concrete, additional protection measures, such as temporary heat or other methods, as recommended by the aggregate manufacturer shall be used.

1.6 SAFETY AND HEALTH REQUIREMENTS: Comply with manufacturer's protective measures in the safe installation and use of the insulation board.

PART II - PRODUCTS:

2.1 PORTLAND CEMENT: ASTM C 150, Type I or II.

2.2 AGGREGATE: ASTM C 332, Group I, lightweight perlite or vermiculite.

2.3 FOAMING AGENTS: ASTM C 796.

2.4 WATER: Water shall be clean and free from injurious amounts of acids, alkali, organic matter, or other deleterious substances.

2.5 EXPANSION JOINT FILLER MATERIAL: ASTM C 612, Class 1, semi rigid, modified for maximum density of 6.0 pounds per cubic foot.

2.6 CRICKETS AND CANTS: Provide preformed crickets and cants using pressure-preservative treated wood, wood fiberboard or form using cellular concrete, as recommended by the roofing manufacturer, unless otherwise indicated.

2.6.1 Face of crickets and cant strips shall have incline of 45 degrees and vertical height of 10 cm (4 in).

2.7 INSULATION BOARD:

2.7.1 Insulation Types: Roof insulation shall be the following material:

a. Composite Boards: FS HH-I-1972/3 (Polyisocyanurate-perlite), Style 1 or 2; FS HH-I-1972/5 (Polyisocyanurate perlite); ASTM C 984 (Polyisocyanurate perlite).

2.7.2 Insulation Thickness: As necessary to provide a thermal resistance (R value) of **10.00** or more. Thickness shall be based on the "R" value for aged insulation.

2.8 WOVEN HEXAGONAL WIRE REINFORCEMENT: Galvanized woven wire netting, 0.09 mm diameter (20 ga.), with 2.5 cm (1 in) hexagonal openings.

PART III - EXECUTION

3.1 PERFORMANCE REQUIREMENTS: Insulating concrete design mix, when tested in accordance with the requirements specified herein, shall meet the following performance requirements.

3.1.1 Minimum Compressive Strength: 4 - 6 Kg/cm^2 (125 $lbs/inch^2$) in 28 days as tested in accordance with ASTM C 495.

3.1.2 Minimum Oven Dry Density: 350 Kg/m^3 (22 lbs/ft^3) as determined in accordance with ASTM C 495.

3.1.3 Coefficient of Heat Transmission: U value of 0.05 Btu/hr/sq-ft/degree F, as determined in accordance with ASHRAE HF. The U value shall incorporate the total roof deck and roofing system design and represent the average U value for the total roof area.

3.2 SURFACE PREPARATION: Clean surfaces to receive insulating concrete of dirt, debris, and other foreign materials that would affect bonding. The deck shall be free of standing water, snow, and ice.

3.3 APPLICATION OF INSULATING CONCRETE AND INSULATION BOARD: Apply insulating concrete, insulation board and related materials in accordance with respective specifications and manufacturer's instructions, except as modified herein.

3.3.1 Mixing: Mix insulating concrete materials mechanically to produce a uniform distribution and to meet design requirements.

3.3.2 Conveying: Convey insulating concrete from the mixer to place of final deposit by methods that will prevent segregation or loss of materials. Equipment shall convey the concrete without material separation or loss of air content.

3.3.3 Crickets and Cants: Crickets and cants, where specified, shall be installed at all vertical surfaces of parapet walls and roof mounted equipment. Crickets and cants shall be either formed in place to the dimensions indicated on Contract drawing PLATES #'s 1, 3, 4, 5, 6, 9, 10, 11, 12, and 15, using light weight cellular concrete as specified herein, or shall be wood, fastened in place.

3.3.4 Expansion Joints: Provide expansion joints through the depth of the light weight insulating concrete at the perimeters of the roof deck, where the roof deck abuts vertical surfaces and where indicated on the drawings. Perimeter expansion joints are not required with cellular concrete.

3.3.5 Slurry Coat and Insulation Board: Thoroughly moisten the concrete deck prior to installation of slurry and insulation board. Bond the insulation board to the structural deck with a slurry coat of the same insulating concrete mix ratio as to be used for fill over the insulation board. Screed the slurry of concrete to a true and even surface, to a minimum of 0.3 cm (1/8 in) over the top of the structural deck. Corrugations of steel decking shall be filled with insulating concrete and screeded even with the slurry coat.

3.3.6 Insulating Concrete Fill: Place the woven wire fabric over insulation board. Place the insulating concrete on the insulation board and screed to an even surface in a continuous operation until placement of a section is completed to slopes as indicated for high points, valleys and positive drainage to roof drains and to eliminate ponding. Ensure that woven wire fabric is emplaced and embedded in the concrete with a minimum cover of 1.5 cm (1/2 in) on both sides. At no place shall the minimum and maximum thickness of the insulating concrete be less than 5 cm (2 in) or greater than 20 cm (8 in)

respectively over the top of insulation board. The cellular concrete surface shall be finished with a minimum 1.5 cm thick cement mortar layer. Mortar shall be wood floated smooth, free of surface defects.

3.3.6.1 Compacting: Roding, tamping, or vibrating will not be permitted.

3.3.6.2 Curing: Minimize traffic on the surface during the curing period. Under normal conditions, apply roofing to the insulating concrete may begin in 3 days. When the insulating concrete is placed during extremely dry conditions, sprinkle additional water on the concrete for hydration of the cement and to minimize shrinkage cracking. After a freezing or heavy rainfall or minor scaling of less than 0.6 cm (1/4 in) depth, broom the surface immediately prior to installation of roofing material.

3.3.6.3 Patching: Remove portions of the insulating concrete deck with excessive scaling of more than 0.6 cm (1/4 in) depth to sound concrete. Patch the surface with Portland cement mortar.

3.3.7 Asphalt Priming: Asphalt prime the roof substrate and perimeter vertical plastering. Application of asphalt primer shall be by the brush method at a rate of 0.25 Kg/m^2.

3.3.8: Application of Non-Protected Modified bitumen (SBS)Roofing membrane: Apply one ply of non-protected modified bitumen membrane to existing roof deck. Application of sheet shall be in accordance with referenced standards and the manufacturer's printed instructions. Each ply shall be entirely heated to ensure positive adhesion of the ply to the substrate surface. Joint overlaps shall be a minimum of 10 cm (4 in). When soldering joints, slight pressure shall be applied for proper bonding. The asphalt sheet shall be extended a minimum 20 cm (8 inches) above crickets at vertical surfaces of parapet walls and a minimum of 10 cm (4 inches) above vertical surfaces of roof mounted equipment.

3.3.9 Application of Self-Protected (SBS) Roofing membrane: : Apply one ply of self-protected modified bitumen membrane. Application of membrane shall be in accordance with referenced standards and the manufacturer's printed instructions. Each ply shall be entirely heated to ensure positive adhesion of the ply to the substrate surface. Joint overlaps shall be a minimum of 10 cm (4 in). When soldering joints, slight pressure shall be applied for proper bonding. The asphalt sheet shall be extended a minimum 30 cm (12 in) above crickets at vertical surfaces of parapet walls and a minimum of 15 cm (6 in) above vertical surfaces of roof mounted equipment.

3.3.9.1 The self-protected polymeric asphalt sheet shall be started at mid-point between joints of the substrate ply.

3.3.10 Roofing Junctions: Junctions of self-protected roofing membranes sheet roofing with vertical surfaces, expansion joints, roof penetrations and roof mounted equipment pads shall be in accordance with the details shown on the Contract drawings, PLATES #'s 8, 9, 10, 11, 12, 13, 14, and 15.

3.4 QUALITY CONTROL: During progress of work, insulating concrete specimens shall be taken for laboratory testing to determine compliance with the performance requirements specified herein.

3.4.1 Test Specimens: Take test cylinder specimens for compressive strength in the presence of the contract Performance Assessment Representative (PAR). Notify the PAR one day prior to the date of taking specimens. A minimum of two (2) test specimens shall be made for each day's concreting, with at least one test required for each 38 (thirty eight) cubic meters {50 (fifty) cubic yards) of insulating concrete. Label specimens to indicate the location at which they were taken. Store specimens in an undisturbed place which will not be exposed to rain and extreme changes of temperature and humidity until ready for testing.

3.4.2 Rejections: If the specified laboratory performance requirements are not met, the insulating concrete shall be field tested for the compressive strength and oven-dry unit weight determinations in accordance with ASTM C 513. Insulating concrete which does not meet the requirements specified shall be removed and replaced with new insulating concrete roof deck materials.

3.5 FIELD TESTS: Field tests shall be performed by the Contractor in the presence of the Contracting Officer's designated representative, when so directed by the Contracting Officer, to demonstrate that the new installed or repaired roofing is fully watertight. The entire roof deck shall have drains plugged and then entirely flooded with water. Leakage observations will be made during a period of not less than 48 hours. Notify the Contracting Officer at least three days prior to scheduled date

of performance of tests. All detected roof leaks in the repaired areas shall be corrected by the Contractor at no additional cost to the Government and the tests repeated, when so directed by the Contracting Officer.

3.6 WARRANTY: Upon completion of the work by the Contractor and acceptance of work by the contract Performance Assessment Representative (PAR), the Contractor shall provide to the Contracting Officer a written 5 year warranty stating that the roofing work, as completed, is free from defective materials and workmanship. If repairs become necessary (within the warranty period) due to defective material and/or workmanship, the Contractor shall satisfactorily repair such defective work upon written request and at no additional cost to the Government.

***** END OF SECTION *****

SECTION 05 50 13

MISCELLANEOUS METAL FABRICATIONS

PART 1 GENERAL

1.1 REFERENCES: The publications listed below form a part of this specification to the extent referenced. The publications are referred to in the text by the basic designation only. The latest edition of the referenced publications shall govern.

1.1.1 MINISTERIO DE FOMENTO (MF-NTE):

NTE-RPP-2	Norma Tecnologica de la Edificacion sobre "Imprimacion Anticorrosiva"
NTE-RPP-12	Norma Tecnologica de la Edificacion sobre "Pintura al Esmalte Sintetico".

1.1.2 UNA NORMA ESPAÑOLA (UNE):

UNE-EN 10056-1	Structural Steel Equal And Unequal Leg Angles. Part 1: Dimensions.
UNE-EN 10219-1	Cold formed welded structural hollow sections of non-alloy and fine grain steels - Part 1: Technical delivery conditions.
UNE 36559	Hot Rolled Steel Plates 3mm Thick Or Above. Tolerances on Dimensions, Shape and Mass.
UNE-EN 287-1	Qualification test of welders – Fusion welding - Part 1: Steels.
UNE-EN 1011-1	Welding - Recommendations for welding of metallic materials - Part 1: General guidance for arc welding
UNE 37501	Hot Dip Galvanizing. Characteristics and Testing Methods.
UNE-EN 10220	Seamless and Welded Steel Tubes - Dimensions and Masses per Unit Length.

1.1.3 CENTRO DE PUBLICACIONES DEL MINISTERIO DE OBRAS PUBLICAS Y URBANISMO (MOPU):

PG-3	Pliego de Prescripciones Tecnicas Generales para Obras de Carreteras y Puentes

1.2 SUBMITTALS: Submit the following in accordance with section entitled "SUBMITTAL Procedures."

1.2.1 Certificates:

a. Cover plates and frames

b. Guard Posts

c. Primer and Paint

1.3 QUALIFICATION OF WELDERS: Qualify welders in accordance with AWS D1.1 using procedures, materials, and equipment of the type required for the work.

1.4 DELIVERY, STORAGE, AND PROTECTION: Protect from corrosion, deformation, and other types of damage. Store items in an enclosed area free from contact with soil and weather. Remove and replace damaged items with new items.

PART 2 PRODUCTS

2.1 MATERIALS:

2.1.1 Steel Pipe: UNE-EN 10219-1.

2.1.2 Patterned Floor Plates: UNE 36559 steel plate. Steel plate shall not be less than 6 mm.

2.1.3 Primer and Paint: MF PG-3, Art. 279 and Art. 278 and NTE-RPP-2 and RPP-12. Primer and paint containing lead shall not be used.

2.2 FABRICATION FINISHES:

2.2.1 Shop Cleaning and Painting:

2.2.2.1 Surface Preparation: Wash cleaned surfaces which become contaminated with rust, dirt, oil, grease, or other contaminants with solvents until thoroughly clean. Steel to be embedded in concrete shall be free of dirt and grease. Do not paint or galvanize bearing surfaces, including contact surfaces within friction-type joints, but coat with rust preventative applied in the shop.

2.2.2.2 Priming and Painting Pretreatment: Apply pretreatment, primer, and paint in accordance with manufacturer's printed instructions. On surfaces concealed in the finished construction or not accessible for finish painting, apply an additional prime coat to a minimum dry film thickness of 0.03 mm (1.0 mil). Tint additional prime coat with a small amount of tinting pigment.

2.2.2.3 Surface Condition: Before finishes are applied, remove roll marks, scratches, rolled-in scratches, kinks, stains, pits, orange peel, die marks, structural streaks, and other defects which will affect uniform appearance of finished surfaces.

2.3 COVER PLATES AND FRAMES: Fabricate cover plates of 6 mm (1/4 inch) thick rolled steel weighing not more than 45 kg (100 pounds) per plate with a selected raised pattern nonslip top surface. Plate shall be galvanized. Frames shall be structural steel shapes and plates, with headed anchors welded to frame for anchoring to concrete. Miter and weld all

corners. Butt joint straight runs. Allow for expansion on straight runs over 4500 mm (15 feet). Provide flush drop handles for removal formed from 6 mm (1/4 inch) round stock where indicated. Remove sharp edges and burrs from cover plates and exposed edges of frames. Weld all connections and grind top surface smooth. Weld bar stops every six inches. Provide 3 mm (1/8 inch) clearance at edges and between cover plates.

2.4 EXTRUDED FLOOR MAT FRAMES: Provide recess frames for rubber or coco mats of extruded 6063-T5 aluminum, in sizes shown. Miter corners to ensure accurate fitting. Determine depth of recess by the mat thickness. Anchor frames in concrete with anchor pins or bolts.

2.5 GUARD POSTS: Provide 150 mm (6 inch) primed coated extra strong weight steel pipe UNE-EN 10220 as specified in MF PG-3, Art. 250 with welded steel base plate. Anchor post in concrete and fill solidly with concrete with a minimum compressive strength of 176 Kg/cm² (2500 psi)(Plate #21).

PART 3 EXECUTION

3.1 INSTALLATION: Install items at locations indicated, according to manufacturer's instructions. Items listed below require additional procedures.

3.2 BUILT-IN WORK: Form for anchorage metal work built-in with concrete or masonry, or provide with suitable anchoring devices as indicated or as required. Furnish metal work in ample time for securing in place as the work progresses.

3.3 WELDING: Perform welding, welding inspection, and corrective welding, in accordance with UNE-EN 287-1. Use continuous welds on all exposed connections. Grind visible welds smooth in the finished installation.

3.4 FINISHES:

3.4.1 Environmental Conditions: Do not clean or paint surface when damp or exposed to foggy or rainy weather, when metallic surface temperature is less than -15 degrees C (5 degrees F) above the dew point of the surrounding air, or when surface temperature is below ^7 degrees C or over 35 degrees C (45 degrees F) or over 95 degrees F, unless approved by the Contracting Officer.

3.4.2 Guard Posts: Guard posts shall receive one primer coat and two finish coats of enamel paint in alternate yellow and black color stripes of 15 cm width.

3.5 COVER PLATES AND FRAMES: Install the tops of cover plates and frames flush with floor.

3.6 GALVANIZING: UNE 37 501. Hot-dip galvanize items specified to be zinc-coated, after fabrication where practicable. Galvanizing:

-- END OF SECTION --

SECTION 07 32 13

ROOF TILES

PART I - GENERAL

1.1 REFERENCES: The publications listed below form a part of this specification to the extent referenced. The publications, if referenced in the text, are by basic designation only. The latest edition of the referenced publications shall govern.

1.1.1 NORMAS TECNOLOGICAS DE LA EDIFICACION (NTE):

NTE QTT/1974	Cubierta de Tejados de Tejas.

1.1.2 NORMAS TECNOLOGICAS DE LA EDIFICACION (NTE):

NTE-QAN / 1973.	Norma tecnológica de la edificación. Cubiertas: Azoteas no transitables.

1.2 SUBMITTALS: Submit the following in accordance with Section 01 33 00, titled "Submittals procedure":

1.2.1 Statements:

a. Qualification of Installer: Submit evidence of experience of personnel used in the installation of arabic tile roofing.

1.2.2 Certificates and Manufacturer's Descriptive Literature: Provide manufacturer's descriptive literature.

1.2.3 Samples: Submit samples pieces of each of the following:

a. Arabic Tile - Each type, shape and size to be used.
b. Wire Mesh.
c. Fasteners and Accessories - Each type, shape and size to be used.

1.3 DELIVERY, STORAGE AND HANDLING: Deliver cement, lime and other materials to the site in unbroken bags, barrels, or other approved containers, plainly marked and labeled with manufacturers' names and brands. Store materials in dry, weather tight sheds or enclosures and handle so as to prevent entry of foreign materials and damage by water or dampness. Handle masonry units with care to avoid chipping and breakage. Protect masonry materials from damage and except for sand, keep dry until used.

PART II - PRODUCTS

2.1 ARABIC TILE: Conforming to UNE 67 024. Made of clay or earthy clay, baked, minimum thickness 8 mm., color red to match existing roof tile on adjacent buildings. Tiles shall have the following physical characteristics:

a. Flexural Strength: Not less than 120 Kg. as determined in accordance with UNE 67 035.
b. Permeability: Not less than 2 hours as determined in accordance with UNE 67 033.

c. Weather Resistance: Not less than 5 cycles as determined in accordance with UNE 67 034.

2.1.1 Tiles shall have a metallic sound by percussion, shall be resistant to chipping, and free of deformations which interfere with assembly or impair the water tightness of the roofing. Tiles shall have no stains and efflorescence and shall not contain soluble salts or lime nodules.

2.1.2 Special Shape Units: Special shape units shall be as provided and installed as necessary in order to provide a complete and functional roofing system.

2.2 MASONRY UNITS:

2.2.1 Hollow Ceramic Tile: Conforming to NTE QTT-6.

2.2.2 Hollow Ceramic Board: Conforming to NTE QTT-7, with tongue and grove edges.

2.3 WOVEN HEXAGONAL WIRE REINFORCEMENT: Conforming to MOPT EH-88, Article 9.3, galvanized woven wire netting, 0.9 mm diameter (20 ga.), with 2.5 cm (1 in) hexagonal openings.

2.4 VAPOR BARRIER: Polyethylene sheeting, 6 mils thick.

2.5 MORTAR:

2.5.1 Cement: Conforming to MOPT RC-88, Portland cement Type P-350.

2.5.2 Hydrated Lime: Conforming to NBE FL-90.

2.5.3 Sand: Conforming to NBE FL-90.

2.5.4 Water: Clean, potable and free from substances which could adversely affect the mortar.

2.5.5 Mortar Mix: Use mortar mix composed of one part cement, two parts hydrated lime and ten parts sand mixed, by volume. The sand in combination with the cement shall produce a mortar of the specified type.

PART III - EXECUTION

3.1 INSTALLATION OF ARABIC TILES: Immerse tiles which will be in direct contact with mortar in clean water at least 3 hours before application or as directed by manufacturer and maintain them wet and ready for application. Install tile in accordance with NTE QTT-11, NTE QTT-28, and NTE QTT-29. Ensure that all tiles are well aligned and their top edges are in the same plane before the mortar is set. The front of the eave tiles shall be filled with cement mortar and finished flush with bottom edge of tile.

3.1.1 Hips: Hip tiles shall be set along the hip starting from the eave upwards and overlapping the tiles a minimum of 10 cm (4 in).

3.1.2 Ridges: Set ridge tiles with overlap in the opposite direction of prevailing winds. Overlaps shall be a minimum of 10 cm (4 in).

3.1.3 Junction at Masonry Vertical Surfaces: Finish installation of arabic tiles at junction of masonry vertical surfaces as indicated on Contract Drawing, PLATE # 5.

3.1.4 Junction at Vertical Surface Expansion Joint: Finish installation of arabic tiles at junction of masonry vertical surface expansion joint as indicated on Contract Drawing, PLATE # 6.

3.1.5 Junction at Gutter: Install arabic tiles at junction of gutter as indicated on Contract Drawing, PLATE # 7.

3.2 CLEANING AND CURING:

3.2.1 Cleaning: Remove excess mortar from exposed surfaces of tiles, and ensure tile is free of mortar stains and other deleterious appearances.

3.2.2 Curing: After the mortar has reached the initial set, maintain the tile roofing wet for a period of at least 48 hours.

***** END OF SECTION *****

SECTION 07 41 13

METAL ROOF PANELS

PART I - GENERAL

1.1 REFERENCES: The publications listed below form a part of this specification to the extent referenced. The publications, if referenced in the text, are by basic designation only. The latest edition of the referenced publications shall govern:

1.1.1 AMERICAN SOCIETY FOR TESTING AND MATERIALS (ASTM):

ASTM A 525	Steel Sheet, Zinc-Coated (Galvanized) by the Hot-Dip Process

1.1.2 UNA NORMA ESPAÑOLA

UNE-EN 10346	Continuously Hot-Dip Coated Steel Flat Products - Technical Delivery Conditions
UNE-EN 10083-1	Steels For Quenching And Tempering - Part 1: General Technical Delivery Conditions

1.1.3 NORMAS TECNOLOGICAS DE LA EDIFICACION (NTE):

NTE-QTL	Cubiertas Tejados Aleaciones Ligeras.
NTE-QTG-1976	Tejados Galvanizados.
NTE-QAN/1973	Cubiertas: Azoteas no transitables.

1.2 DEFINITIONS

1.2.1 Corrugated Metal Sheet: Sheet with finish coating system which is bent into standard corrugated shapes by roll forming.

1.2.2 Finish Coating System: Factory applied, organic coating system which is applied over sheet.

1.2.3 Panel: One of series of standard sized units produced by factory cutting of longer lengths of corrugated sheet, ready for installation as preformed metal roofing or siding.

1.2.4 Edge Creepage: Measurement of expected performance at conditions of field cut panel edges, drilled hole edges or site scratches of protective coating through handling or tool misusage.

1.2.5 Primary Zone: Environment influenced area 1.25 miles from industrial complex or 1.5 miles from seacoast.

1.3 PERFORMANCE REQUIREMENT: When subjected to full design loads, roof panels shall not deflect more than 1/240 of roof panels clear span.

1.4 SUBMITTALS: Submit the following in accordance with Section 01 33 00, titled "Submittals procedure":

1.4.1 Certificates and Manufacturer's Descriptive Literature: Provide manufacturer's certifications, descriptive literature, catalog cuts and technical data sheets for the following:

a. Panels
b. Fastener

c. Supports
d. Flashing

1.4.2 Factory Test Reports: Submit reports performed by independent qualified testing laboratories, for the following:

a. Formability test
b. Weathering test
c. Salt spray test
d. Humidity test

1.4.3 Manufacturer's Standard Color Charts.

1.5 DELIVERY, STORAGE, AND HANDLING: Carefully deliver, store, and handle panels and other manufactured products. Stack materials stored on site on platforms or pallets, and cover with tarpaulins or other weather tight covering. Do not use plastic which may cause sweating or condensation. Store panels so that water which may have accumulated during transit or storage, drains off. Do not store panels in contact with materials that might cause staining. Inspect panels upon arrival at job site; if wet, remove moisture, and restack and protect panels until used.

PART II - PRODUCTS

2.1 ROOFING PANELS: Sheets shall be capable of supporting design loads between unsupported spans with deflection not greater than 1/80 of the span width on roofs. Where gages are specified, gages are subject to normal manufacturing tolerances. Panels shall conform to NTE QTG-5, as applicable.

2.1.1 Coated Steel Panel Shape:

a. Standard corrugated type having 6.8 cm (2.67 in) pitch and 1.27 to 2.22 cm (0.5 to 0.875 in) depth, exclusive of coating.

b. V-beam or boxed beam type having 12.7 to 20.32 cm (5 to 8 in) pitch and 3.7 cm (1.5 inch) overall depth, exclusive of coating.

c. Panels shall have pitch, overall depth, exclusive of coating, and general profile configuration as those being removed, in order to match adjacent panels to remain in place.

d. Material and Coating: Form sheets from steel conforming to ASTM A 525, Structural Grade A, galvanized coating, Class G-90; Z 275 in accordance with UNE 10346.

e. Gage: Minimum 22 U.S. Standard Gage for roof panels, but in no case lighter than required to meet maximum deflection requirements specified.

2.1.2 Aluminum Zinc Alloy Coated Steel Sheet: Aluminum zinc alloy coated steel sheet shall conform to ASTM A 792. Panels and related flashing shall be a minimum 26 gauge (.019 inches) thickness.

a. Weight: Weight shall be 126 LB per square inches(6.15 kg per square meter).

b. Exterior finishes shall be a two part coating system based on ultra high molecular weight polymer technology. Coating shall also include a stucco embossed finish to enhance appearance and reduce gloss.

c. Interior finish used on underside of panels and components shall consist of a backed coat with a dry film thickness of one mil (.001 inches) for extra corrosion protection.

2.1.3 Insulated Sandwich Panel Construction. **(When applicable).**

a. Insulated sandwich panel assembly shall be fabricated from two sheets of metal with polyurethane foam insulation core (foamed-in place) during fabrication with joints between panels designed to form weather-tight seals. Include accessories required for weather-tight installation.

b. Insulation material shall be polyurethane.

c. Insulation thickness shall be 50 mm.

d. Exterior sheet metal shall be galvanized steel 0.5 mm thick standard red factory painted.

e. Interior sheet metal shall be galvanized steel 0.4 mmm thick, white factory painted.

f. All panels are to receive a factory-applied (polyvinylidene fluoride) finish consisting of a baked-on top-coat with a manufacture's recommended prime coat.

g. Exterior finish coating: Apply the finish coating over the primer by roll coating to dry film thickness of 0.80 plus 5 mils (3.80 plus 0.50 mils for vinyl plastisol) for a total dry film thickness of 1.00 plus 0.10 mils (4.00 plus 0.10 mils for vinyl plastisol). Ensure the finish coat is oven-cured.

h. Interior finish coating: Apply a wash-coat on the reverse side over the primer by roll coating to a dry film thickness of 0.30 plus 0.05 mils for a total dry film thicknes of 0.50 plus 0.10 mils. Ensure the wash-coat is oven-cured.

2.2 ACCESSORIES: Provide sheet metal flashings, trim moldings, closure strips, caps, and other preformed metal panel accessories, of same material and finish as panels, except accessories that are concealed after installation, and are aluminum or zinc-coated steel may be provided unfinished. Provide metal thickness not less than that of panels. Provide molded closure strips of closed-cell or solid-cell synthetic rubber, neoprene, or polyvinyl chloride pre-molded to match configurations of preformed metal panels.

2.3 FASTENERS: Provide fasteners for attaching panels to structural supports and to adjoining panels, conforming to NTE QTG-1, and in accordance with printed manufacturer's recommendations; unless specified otherwise, fasteners shall be any of the following: Self-tapping screws, bolts and nuts or self-locking rivets. Provide fastening system to withstand design loads indicated. Fasteners shall be Series 305 stainless steel. Fasteners, except those having integral hexagonal washer heads shall have composite metal and neoprene washers. Provide fasteners having integral hexagonal washer heads with polychloroprene washers.

2.3.1 Screws: Not less than No. 14 diameter self-tapping or self-drilling types.

2.3.2 Blind Rivets: Stainless steel with nominal 4.75 mm (3/16 in) diameter shank or aluminum with nominal 4.75 mm (3/16 in) diameter shank. Provide thread-system-type rivets for other than fastening of trim. Close rivets with hollow stems.

2.3.3 Bolts: Minimum 6.35 mm (1/4 in) diameter, shouldered or plain shank nuts, conforming to UNE-EN 10083-1 Class F-111.

2.4 JOINT SEALING MATERIAL: FS TT-C-1796, Type II, Class B ribbon form sealant, or as otherwise recommended by the panel manufacturer.

2.5 SOURCE QUALITY CONTROL:

2.5.1 Weathering Test: Sample of finished-coated sheet shall withstand weathering test for minimum of 2,000 hours in accordance with ASTM G 23 or ASTM G 26 without cracking, peeling, blistering, loss of adhesion of finish coating system or corrosion of base metal. Finish coating system that can be readily removed from base metal with penknife blade or similar instrument shall be considered to indicate loss of adhesion.

2.5.2 Salt Spray Test for Primary Zones: Sample of finish-coated sheet shall withstand salt spray test for minimum of 1,000 hours in accordance with ASTM B 117, including scribe requirement in test. Immediately upon removal of specimen from test, finish coating system shall receive rating of very few blisters, none larger than No. 8 as determined by ASTM D 714; and average rating of 9, edge creepage, 1/64-inch creepage from scribe as determined by ASTM D 1654.

2.5.3 Humidity Test for Primary Zones: When subjected to humidity cabinet test in accordance with ASTM D 2247 for 1,000 hours, factory-finished, organic-coated panel shall show no signs of blistering, cracking, creepage, or corrosion with no loss of adhesion.

PART III - EXECUTION

3.1 INSTALLATION: Panels shall be installed in accordance with manufacturer's approved installation instructions, and drawings. Install panels in full and firm contact with each other at side and end laps. Where panels are cut in field or where factory applied coating is damaged and necessary repairs have been made with material of same type and color as finish coating, obtain approval of the contract Performance Assessment Representative (PAR) before installation. Correct defects in materials. Remove defective materials which cannot be corrected, and provide non-defective materials. All cut ends and edges, including those at openings through the panels, shall be sealed completely. Provide molded closure strips where indicated and whenever panels terminate with open ends after installation.

3.1.1 Roof Panels: Apply roofing panels with longitudinal configurations in the direction of the roof slope. Provide roofing panels in longest lengths obtainable, with end laps occurring only at purlins and structural members, with no transverse joints except at junction of ventilators, curbs, skylights, chimneys, and similar openings. Lay side laps away from prevailing wind, and seal side and end laps with joint-sealing material. Flash seal roof at ridge, eaves, rakes, and at projections through roof. Provide flashing and sealing material to achieve complete weather tightness. Minimum end laps shall be 20 cm (8 in) and shall occur only over purlins and structural members.

3.1.2 Flashings: Provide flashings and accessories provided with preformed metal panels, where indicated, to provide watertight installation. Installation shall allow for expansion and contraction of flashing.

3.1.3 Fastener Installation: Provide fastener spacings in accordance with manufacturer's recommendations to withstand design loads required. Install fasteners in valleys or crowns in accordance with manufacturer's recommendations. Install fasteners in straight lines within tolerance of 12.5 mm in length of bay. Drive exposed, penetrating type fasteners normal to surface and to uniform depth to seat washers with gaskets. Drive so as not to damage factory applied coating. Exercise extreme care when drilling pilot hole for fastenings to keep drills perpendicular and centered in valleys or crowns, as applicable. After drilling, remove metal filings and burrs from holes prior to installing fasteners and washers. Torque used when applying fasteners shall not exceed that recommended by manufacturer. Remove panels damaged by over torque fastenings, and provide new panels. Remove metal shavings and fillings from roofs upon completion to prevent rusting and discoloration of panels.

3.1.4 Roofing Junction: Junction of roofing with vertical surfaces shall be made in accordance with the installation detail as indicated on Contract drawing PLATE #'s 1 & 2.

3.1.5 Joints: Joints shall be sealed with an elastomeric caulking, in accordance with manufacturer's instructions, as applicable.

3.2 RE-SEALING OF JOINTS, OVERLAPS AND FASTENERS:

3.2.1 Existing joint and/or overlap caulking shall be completely removed and the surface area to receive new caulking shall be thoroughly cleaned and prepared. Re-seal joints and/or overlaps as specified herein.

3.2.2 Existing fasteners shall be removed and replaced with new over-sized fasteners and washers. The surface area shall be thoroughly cleaned and prepared. Install and re-torque fasteners as recommended by the manufacturer.

***** END OF SECTION *****

SECTION 07 52 00

MODIFIED BITUMINOUS MEMBRANE ROOFING

PART I - GENERAL

1.1 REFERENCES: The publication listed below forms a part of this specification to the extent referenced. The publication, if referenced in the text, is by basic designation only. The latest edition of the referenced publication shall govern.

1.1.1 NORMA TECNOLOGICA DE LA EDIFICACION (NTE):

NTE-QAN/1973	Cubiertas: Azoteas no transitables.

1.1.2 ASTM INTERNATIONAL (ASTM): ASTM D 312 (2000; R 2006) Standard Specification for Asphalt Used in Roofing.

1.2 SUBMITTALS: Submit the following in accordance with Section 01 33 00, titled "Submittal procedure":

1.2.1 Certificates of Conformance or Compliance: Submit certificates from the manufacturer certifying that the roofing materials furnished comply with the requirements of the applicable publication and the physical and chemical properties specified.

1.2.2 Samples and Manufacturer's Data: Submit samples and manufacturer's data including installation instructions for all roofing materials to be used in the work.

1.3 DELIVERY, STORAGE AND HANDLING:

1.3.1 Delivery: Deliver materials in manufacturer's original unopened containers and rolls with manufacturer's labels intact and legible. Where materials are covered by a referenced specification, the container shall bear the specification number, type, and class, as applicable. Deliver materials in sufficient quantity to allow continuity of work.

1.3.2 Storage and Handling: Protect roofing materials against moisture absorption. Store roofing materials on end on clean raised platforms in dry locations with adequate ventilation. Do not store materials inside the building. Handle roofing sheet rolls carefully.

1.4 PROTECTION OF PROPERTY:

1.4.1 Flame-Heated Equipment: Locate and use flame-heated equipment so as not to endanger the structure or other materials on the site or adjacent property. Provide and maintain a fire extinguisher near each item of flame-heated equipment.

1.4.2 Special Protection: Provide special protection approved by the insulation manufacturer, or avoid heavy traffic on completed work when ambient temperature is above 27° C (80° F).

PART II - PRODUCTS

2.1 Cellular Concrete: Provide cellular concrete conforming to and in accordance with Section 03 52 00, titled "LIGHTWEIGHT CONCRETE ROOF INSULATION".

2.2 Cement Mortar: Portland cement, ASTM C 150, Type I or II mixed at 1:5 ratio with clean potable water, having the following characteristics:

a. Compressive Strength: 250 Kg/m^3.

2.3 Asphalt Primer: Shall consist of an asphalt base, rubber modified, diluted in toluene having a density of 0.95 gm/m^3 and a viscosity of 1,500-5,000 cps at 25^0 C. Primer shall not contain water and have good brushing or mopping properties.

2.4 Modified bituminous membrane (Non-Protected): Flexible modified bituminous membrane, with the following properties:
Manufactured with modified bitumen styrene butadiene styrene (SBS) modified bituminous membrane, finished on the underside with non-adhesive plastic film. Modified bituminous membrane roofing at both faces, polyester reinforced, 2.4 kg/sm and 60 gr/sm base ply.

2.4.1 Non-protected modified bituminous membrane roofing membrane shall be quality certified. (Documento de Idoneidad Tecnica) by Instituto Eduardo Torroja de la Construccion.

2.5 Modified bituminous membrane (Self-Protected): Flexible modified bituminous membrane, with the following properties:
Manufactured with modified bitumen styrene butadiene styrene (SBS) modified bituminous membrane, finished on the underside with non-adhesive plastic film, and on the exposed side with an integral protection of SBS final mineral granule surface modified bituminous membrane roofing, average weight of 4 kg/sm self protected, 150 gr/sm of polyester reinforced styrene butadiene styrene (SBS) modified bituminous membrane.

2.5.1 Self-protected roofing sheet shall be quality certified (Documento de Idoneidad Tecnica) by Instituto Eduardo Torroja de la Construccion.

2.6 Crickets and Cants: Provide preformed crickets and cants using pressure-preservative treated wood, wood fiberboard or form using cellular concrete, as recommended by the roofing manufacturer, unless otherwise indicated.

2.6.1 Face of crickets and cant strips shall have incline of 45 degrees and vertical height of 10 cm (4 in).

PART III - EXECUTION:

3.1 EXAMINATION AND PREPARATION:

3.1.1 Surface Inspection: Surfaces shall be clean, smooth, and dry. Surfaces shall be free of projections which might puncture the modified bitumen sheet. Check roof deck surfaces, including surfaces sloped to roof drains and outlets, for defects before starting work. The contract Performance Assessment Representative (PAR) will inspect and approve the surfaces immediately before starting installation.

3.1.2 Surface Preparation: Before starting surface preparation work the existing roof drains shall be plugged to prevent penetration of foreign matter. The Contractor shall clean the roof surface with compressed air to remove all dirt and rubbish. Existing concrete or Sevillana tile roofing surface shall be thoroughly cleaned of all dirt and foreign matter and wire brushed. Correct defects and inaccuracies in roof deck surface to eliminate poor drainage and hollow or low spots.

3.1.3 Crickets and Cants: Crickets and cants, where specified, shall be installed at all vertical surfaces of parapet walls and roof mounted equipment. Crickets and cants shall be either formed in place to the dimensions indicated on Contract drawing PLATE # 4, using light weight cellular concrete as specified herein, or shall be wood, fastened in place. Cast in place crickets and cants shall be set and thoroughly dry before application of asphalt primer and asphalt roofing sheets.

3.1.4 Slope Forming: Where ordered, a layer of cellular concrete shall be applied to the cleaned roof deck to provide a minimum 1% slope. The slope shall be continuous, smooth, and uniform to the roof drains, scuppers or gutters as indicated. The cellular concrete surface shall be finished with a minimum 1.5 cm thick cement mortar layer. Mortar shall be wood floated smooth, free of surface defects.

3.1.5 Asphalt Priming: Asphalt prime the roof substrate and perimeter plastering. Application of asphalt primer shall be by the brush method at a rate of 0.25 Kg/m^2.

3.1.6 Application of Non-Protected Modified bitumen (SBS)Roofing membrane: Apply one ply of non-protected modified bitumen membrane to existing roof deck. Application of sheet shall be in accordance with referenced standards and the manufacturer's printed instructions. Each ply shall be entirely heated to ensure positive adhesion of the ply to the substrate surface. Joint overlaps shall be a minimum of 10 cm (4 in). When soldering joints, slight pressure shall be applied for proper bonding. The asphalt sheet shall be extended a minimum 20 cm (8 inches) above crickets at vertical surfaces of parapet walls and a minimum of 10 cm (4 inches) above vertical surfaces of roof mounted equipment.

3.1.7 Application of Self-Protected Modified bitumen (SBS) Roofing membrane: Apply one ply of self-protected modified bitumen membrane. Application of membrane shall be in accordance with referenced standards and the manufacturer's printed instructions. Each ply shall be entirely heated to ensure positive adhesion of the ply to the substrate surface. Joint overlaps shall be a minimum of 10 cm (4 in). When soldering joints, slight pressure shall be applied for proper bonding. The asphalt sheet shall be extended a minimum 30 cm (12 in) above crickets at vertical surfaces of parapet walls and a minimum of 15 cm (6 in) above vertical surfaces of roof mounted equipment.

3.1.7.1 The self-protected modified bitumen sheet shall be started at mid-point between joints of the substrate ply.

3.1.8 Roofing Junctions: Junctions of self-protected modified bitumen sheet roofing with vertical surfaces, expansion joints, roof penetrations and roof mounted equipment pads shall be in accordance with the details shown on the Contract drawings, PLATE # 4.

3.2 WEATHER LIMITATIONS: Roofing work shall not be performed with strong winds in excess of 40 Km/h, when the weather is rainy or rain is forecast. If rains occur during roofing work, the work shall be stopped and will not be resumed until the roofing surface being worked on is completely dry and approved by the Contracting Officer. Roofing work in progress shall be left protected from inclement weather at the end of day's work.

3.3 FIELD TESTS: Field tests shall be performed by the Contractor in the presence of the Contracting Officer's designated representative, when so directed by the Contracting Officer, to demonstrate that the new installed or repaired roofing is fully watertight. The entire roof deck shall have drains plugged and then entirely flooded with water. Leakage observations will be made during a period of not less than 48 hours. Notify the Contracting Officer at least three days prior to scheduled date of performance of tests. All detected roof leaks in the repaired areas shall be corrected by the Contractor at no additional cost to the Government and the tests repeated, when so directed by the Contracting Officer.

3.4 WARRANTY: Upon completion of the work by the Contractor and acceptance of work by the contract Performance Assessment Representative (PAR), the Contractor shall provide to the Contracting Officer a written 5 year warranty stating that the roofing work, as completed, is free from defective materials and workmanship. If repairs become necessary (within a warranty period) due to defective material and/or workmanship, the Contractor shall satisfactorily repair such defective work upon written request and at no additional cost to the Government.

***** END OF SECTION *****

SECTION 07 54 19

POLYVINYL CHLORIDE (PVC) ROOFING

PART I - GENERAL

1.1 REFERENCES: The publications listed below form a part of this specification to the extent referenced. The publications, if referenced in the text, are by basic designation only. The latest edition of the referenced publications shall govern.

1.1.1 NORMAS TECNOLOGICAS DE LA EDIFICATION (NTE)

NTE-QTS	Tejados Sintéticos

1.1.2 NORMA TECNOLOGICA DE LA EDIFICACION (NTE):

NTE-QAN/1973	Cubiertas: Azoteas no transitables.

1.1.3 NORMA TECNOLOGICA DE LA EDIFICACION (NTE):

NTE-QTG/1976	Cubiertas: Tejados galvanizados.

1.2 SUBMITTALS: Submit the following in accordance with Section 01 33 00, titled “Submittal procedures":

1.2.1 Certificates and Manufacturer's Descriptive Literature: Provide manufacturer's descriptive literature for the following:

a. Panels
b. Fastener
c. Supports
d. Flashing

1.3 DELIVERY, STORAGE, AND HANDLING: Carefully deliver, store, and handle panels and other manufactured products. Stack materials stored on site on platforms or pallets, and cover with tarpaulins or other weather tight covering. Do not use plastic which may cause sweating or condensation. Store panels so that water which may have accumulated during transit or storage, drains off. Do not store panels in contact with materials that might cause staining. Inspect panels upon arrival at job site; if wet, remove moisture, and restack and protect panels until used.

PART II - PRODUCTS

2.1 ROOFING PANELS: Conforming to UNE 23-727-80, combustibility rate M4. Formed of reinforced plastic. Sheets shall be capable of supporting design loads between unsupported spans with deflection not greater than 1/80 of the span width on roofs, but in no case shall the wall thickness of the sheets be less than specified herein.

2.1.1 **Corrugated Reinforced Plastic Panels:** Panels shall be of corrugation type, having a cross sectional corrugation profile and depth to match that of existing to be replaced, or as specified installed. Panels shall be fiberglass reinforced plastic, minimum 1.50 millimeter thick. Color shall be as specified. Panels shall have the following properties:

Property	Value
Density	1.50 gr/cm^3
Compressive Strength	1,450.00 kg/cm^2

Bending Strength	2,400.00 kg/cm^2
Elastic module	56.00 kg/cm^2
Crippling Strength	65.00 kg
Weight	2,930.00 gr/m^2
Moment of Inertia	67.69 cm^4/m
Strength module	26.55 cm^3/m
Curvature Radius	2.00 cm
Fiber Glass Content	580-650 gr/m^2

2.2 Accessories: Provide flashings, trim moldings, caps, and other preformed panel accessories, of same material and finish as panels. Accessory thickness shall be equal to or greater than that of the panels.

2.3 Fasteners: Conforming to NTE QTG-1. Provide fasteners for attaching panels to structural supports and to adjoining panels as approved and in accordance with printed manufacturer's recommendations; unless specified otherwise, fasteners shall be screws, bolts and nuts. Provide fastening system to withstand design loads required.

2.3.1 Screws: Cadmium-plated steel or stainless steel, not less than No. 14 diameter self tapping or self drilling type.

2.3.2 Bolts: Galvanized steel conforming to UNE 36.011 Class F-111, not less than 6.35 mm (1/4 in) diameter, shouldered or plain sank as required, with proper nuts and metal washers.

2.4 Joint-Sealing Material: Joint sealing material shall be as indicated or recommended by the panel manufacturer.

PART III - EXECUTION

3.1 INSTALLATION: Panels shall be installed in accordance with manufacturer's approved installation instructions, and drawings. Install panels in full and firm contact with each other at side and end laps. Where panels are cut in field obtain approval of the contract Performance Assessment Representative (PAR) before installation. Correct defects in materials. Remove defective materials which cannot be corrected, and provide non-defective materials.

3.1.2 Roof Panels: Apply roofing panels with longitudinal configurations in the direction of the roof slope. Provide roofing panels in longest lengths obtainable, with end laps occurring only at purlins and structural members, with no transverse joints except at junction of ventilators, curbs, skylights, chimneys, and similar openings. Lay side laps away from prevailing wind, and seal side and end laps with joint-sealing material. Flash seal roof at ridge, eaves, rakes, and at projections through roof. Provide flashing and sealing material to achieve complete weather tightness. Minimum end laps shall be 20 cm (8 in) and shall occur only over purlins and structural members.

3.1.3 Flashings: Provide flashings and accessories provided with preformed panels, where indicated, to provide watertight installation. Installation shall allow for expansion and contraction of flashing and supports.

3.1.4 Fastener Installation: Provide fastener spacings in accordance with manufacturer's recommendations to withstand design loads required. Install fasteners in valleys or crowns in accordance with manufacturer's recommendations. Install fasteners in straight lines within tolerance of 12.5 mm. in length of bay. Drive exposed, penetrating-type fasteners normal to surface and to uniform depth to seat washers with gaskets. Exercise extreme care when drilling pilot hole for fastenings to keep drills perpendicular and centered in valleys or crowns, as applicable. After drilling, remove filings and burrs from holes prior to installing fasteners and washers. Torque used when applying fasteners shall not exceed that recommended by manufacturer. Remove panels damaged by over-torque fastenings, and provide new panels.

3.1.5 Roofing Junction: Junction of roofing with vertical surfaces shall be made in accordance with the installation detail as indicated on Contract drawing PLATES #'s 1 & 2.

3.1.6 Joints: Joints shall be sealed with an elastomeric caulking, in accordance with manufacturer's instructions, as applicable.

3.2 RE-SEALING OF JOINTS, OVERLAPS AND FASTENERS:

3.2.1 Existing joint and/or overlap caulking shall be completely removed and the surface area to receive new caulking shall be thoroughly cleaned and prepared. Re-seal joints and/or overlaps as specified herein.

3.2.2 Existing fasteners shall be removed and replaced with new over-sized fasteners and washers. The surface area shall be thoroughly cleaned and prepared. Install and re-torque fasteners as recommended by the manufacturer.

***** END OF SECTION *****

SECTION 07 55 00

PROTECTED MEMBRANE ROOFING

PART I - GENERAL

1.1 REFERENCES: The publications listed below form a part of this specification to the extent referenced. The publications, if referenced in the text, are by basic designation only. The latest edition of the referenced publications shall govern.

1.1.1 AMERICAN SOCIETY FOR TESTING AND MATERIALS (ASTM):

ASTM C 578	Rigid, Cellular Polystyrene Thermal Insulation
ASTM D 41	Asphalt Primer Used in Roofing, Damp proofing, and Waterproofing

1.1.2 NORMA TECNOLOGICA DE LA EDIFICACION (NTE):

NTE-QAN/1973	Cubiertas: Azoteas no transitables.

1.2 SUBMITTALS: Submit the following in accordance with Section 01 33 00, titled "Submittal procedures":

1.2.1 Manufacturer's Catalog Data:

a. Insulation board.

1.2.2 Instructions:

a. Insulation board.

1.2.3 Samples: Provide samples, in the sizes indicated of the following:

a. Insulation Board: 30.5 cm x 30.5 cm (12 x 12 inch) piece.

b. Separation Sheet: 30.5 cm x 30.5 cm (12 x 12 inch) piece.

1.3 DELIVERY, STORAGE, AND HANDLING:

1.3.1 Delivery: Deliver materials to site in manufacturer's unopened and undamaged standard commercial containers bearing the following legible information:

a. Name of manufacturer;
b. Brand designation;
c. Specification number, type, and class, as applicable, where materials are covered by a referenced specification; and

1.3.1.1 Deliver materials in sufficient quantity to allow continuity of the work.

1.3.2 Storage and Handling: Store and handle materials in a manner to protect from damage, exposure to open flame or other ignition sources, and from wetting and moisture absorption. Store in an enclosed building or trailer that provides a dry, adequately ventilated environment. Replace damaged material with new material.

1.4 ENVIRONMENTAL CONDITIONS: Do not install roof insulation during inclement weather or when air temperature is below 4.5^o C (40° F) or when there is ice, frost, or moisture visible on the roof deck.

1.5 PROTECTION OF PROPERTY:.

1.5.1 Flame-Heated Equipment: Locate and use flame-heated equipment so as not to endanger the structure or other materials on the site or adjacent property. Provide and maintain a fire extinguisher near each item of flame-heated equipment.

1.5.2 Special Protection: Provide special protection approved by the insulation manufacturer, or avoid heavy traffic on completed work when ambient temperature is above 27° C (80° F).

PART II - PRODUCTS:

2.1 Insulation Type: Roof insulation shall be extended rigid polystyrene foam, closed cell structure, having the following characteristics:

a. Density: 32 Kg/m^2.
b. Thermal Conductivity (k): 0.024 kcal/Hr/m at 10□ C.
c. Compressive Strength: 3 Kg/m^2.
d. Water Absorption: 0.2%.
e. Insulation Thickness: As necessary to provide a thermal resistance (R value) of **10.0** or more. Thickness shall be based on the "R" valve for aged insulation.

2.1.1 Insulation board shall be quality certified (Documento de Idoneidad Tecnica) by Instituto Eduardo Torroja de la Construction.

2.2 Cellular Concrete: Provide cellular concrete conforming to and in accordance with Section 03 52 00, titled "LIGHTWEIGHT CONCRETE ROOF INSULATION".

2.3 Cement Mortar: Portland cement, mixed with clean potable water, having the following characteristics:

a. Compressive Strength: 250 Kg/m^2.

2.4 Asphalt Primer: An asphalt base, rubber, modified, diluted in toluene having a density of 0.95 gm/m^3 and a viscosity of 1,500 - 5,000 c.p.s. at 25□ C.

2.4.1 Primer shall not contain water and have good brushing or mopping properties.

2.5 Polymeric Asphalt Sheet (Non-Protected): Flexible modified bituminous membrane, with the following properties: Manufactured with modified bitumen styrene butadiene styrene (SBS) modified bituminous membrane, finished on the underside with non-adhesive plastic film Modified bituminous membrane roofing at both faces, polyester reinforced, 2.4 kg/sm and 60 gr/sm base ply.

2.5.1 Non-protected roofing sheet shall be quality certified. (Documento de Idoneidad Tecnica) by Instituto Eduardo Torroja de la Construccion.

2.6 Polymeric Asphalt Sheet (Self-Protected): Flexible modified bituminous membrane, with the following properties: Manufactured with modified bitumen styrene butadiene styrene (SBS) modified bituminous membrane, finished on the underside with non-adhesive plastic film, and on the exposed side with an integral protection of SBS final mineral granule surface modified bituminous membrane roofing, average weight of 4 kg/sm self protected, 150 gr/sm of polyester reinforced styrene butadiene styrene (SBS) modified bituminous membrane.

2.6.1 Self-protected roofing sheet shall be quality certified (Documento de Idoneidad Tecnica) by Instituto Eduardo Torroja de la Construccion.

2.7 Puncher-Resistant Separation Sheet: Shall consist of continuous polypropylene fibers thermically bonded and have the following properties:

a. **Tension strength:** 500 Kg/m^2.
b. **Elongation:** 75%.
c. **Permeability:** 80 m^2/s.
d. **Nominal Weight:** 100 gm/m^2.
e. **Punch Resistance:** 100 Kg.

2.7.1 Separation sheet shall be quality certified (Documento de Idoneided Tecnica) by Instituto Eduardo Torroja de la Construccion.

2.8 Ballasting Gravel: Shall be clean water-worn gravel, conforming to the following sizes:

TABLE I

UNE Sieve, mm	Percent by Weight Passing
40	70-100
25	30-65
12.5	0-20

2.9 Crickets and Cants: Provide preformed crickets and cants using pressure-preservative treated wood, wood fiberboard or form using cellular concrete, as recommended by the roofing manufacturer, unless otherwise indicated.

2.9.1 Face of crickets and cant strips shall have incline of 45 degrees and vertical height of 10 cm (4 in).

PART III - EXECUTION

3.1 EXAMINATION AND PREPARATION:

3.1.1 Surface Inspection: Surfaces shall be clean, smooth, and dry. Surfaces shall be free of projections which might puncture the polymeric asphalt sheet. Check roof deck surfaces, including surfaces sloped to roof drains and outlets, for defects before starting work. The contract Performance Assessment Representative (PAR) will inspect and approve the surfaces immediately before starting installation.

3.1.2 Surface Preparation: Before starting surface preparation work the existing roof drains shall be plugged to prevent penetration of foreign matter. The Contractor shall clean the roof surface with compressed air to remove all dirt and rubbish. Existing "sevillana" tile roofing shall be thoroughly cleaned of all dirt and foreign matter and wire brushed. Correct defects and inaccuracies in roof deck surface to eliminate poor drainage and hollow or low spots.

3.1.3 Crickets and Cants: Crickets and cants, where specified, shall be installed at all vertical surfaces of parapet walls and roof mounted equipment. Crickets and cants shall be either formed in place to the dimensions indicated on Contract drawing PLATE #'s 1, 3, 4, 5, 6, 12, 14, 15, and 16, using light weight cellular concrete as specified herein, or shall be wood, fastened in place. Cast in place crickets and cants shall be set and thoroughly dry before application of asphalt primer and asphalt roofing sheets.

3.1.4 Slope Forming: Where ordered, a layer of cellular concrete shall be applied to the cleaned roof deck to provide a minimum 1% slope. The slope shall be continuous, smooth, and uniform to the roof drains, scuppers or gutters as indicated.

The cellular concrete surface shall be finished with a minimum 1.5 cm thick cement mortar layer. Mortar shall be wood floated smooth, free of surface defects.

3.1.5 Asphalt Priming: Asphalt prime the roof substrate and perimeter plastering. Application of asphalt primer shall be by the brush method at a rate of 0.25 Kg/m^2.

3.1.6 Application of Non-Protected Polymeric Asphalt Roofing Sheet: Apply one ply of non-protected polymeric asphalt sheet to existing roof deck. Application of sheet shall be in accordance with referenced standards and the manufacturer's printed instructions. Each ply shall be entirely heated to ensure positive adhesion of the ply to the substrate surface. Joint overlaps shall be a minimum of 10 cm (4 in). When soldering joints, slight pressure shall be applied for proper bonding. The asphalt sheet shall be extended a minimum 30 cm (12 in) above crickets at vertical surfaces of parapet walls and a minimum of 15 cm (6 in) above vertical surfaces of roof mounted equipment.

3.1.7 Application of Self-Protected Asphalt Roofing Flashing Strip: Apply a strip of self-protected asphalt sheet onto the non-protected asphalt sheet ply at the junction with the parapet wall. The self-protected asphalt sheet shall overlap the non-protected asphalt sheet ply 10 cm (4 in). before the start of the parapet wall cant and shall extend up the parapet to the existing pre-cast concrete coping, without interfering with the parapet dripping.

3.1.8 Roofing Junctions: Junctions of self-protected polymeric asphalt sheet roofing with vertical surfaces, expansion joints, roof penetrations and roof mounted equipment pads shall be in accordance with the details shown on the Contract drawings, PLATE #'s 8, 9, 10, 11, 12, 13, 14, 15, and 16.

3.1.9 Installation Of Rigid Board Insulation: Install insulation in two layers when total required thickness of insulation exceeds 5.0 cm (2 in). Lay insulation so that continuous longitudinal joints are perpendicular to direction of asphalt sheet ply, and end joints of each course are staggered with those of adjoining courses. Insulation boards shall be installed with keyed joints. When using multiple layers of insulation, joints of each succeeding layer shall be parallel and offset in both directions with respect to layer below. Keep insulation 1.3 cm (1/2 in) clear of vertical surfaces penetrating and projecting from roof surface. No bonding material is to be used.

3.1.10 Installation of Puncher-Resistant Separation Sheet: Apply on top of insulation one ply of puncher-resistant separation sheet. Secure in place until the installation of ballasting aggregate in complete.

3.1.11 Installation of Ballasting Aggregate: Apply a 5 cm (2 in) layer of ballasting aggregate on top of punch-resistant separation sheet. The layer of ballasting aggregate shall thoroughly cover all of the roof surface.

3.2 PROTECTION:

3.2.1 Protection of Applied Insulation: Completely cover each day's installation of insulation with ballasting aggregate. Do not permit phased construction. Do not permit storing, walking, wheeling, or trucking directly on insulation or on roofed surfaces. Provide smooth, clean board or plank walkways, runways, and platforms near supports, as necessary, to distribute weight to conform to compressive strength limitations of the insulation and live load limits of roof construction.

3.2.2 Damaged Work and Materials: Restore work and materials that become damaged during construction to original condition or replace with new materials.

3.3 FIELD TESTS: Field tests shall be performed by the Contractor in the presence of the Contracting Officer's designated representative, when so directed by the Contracting Officer, to demonstrate that the new installed or repaired roofing is fully watertight. The entire roof deck shall have drains plugged and then entirely flooded with water. Leakage observations will be made during a period of not less than 48 hours. Notify the Contracting Officer at least three days prior to scheduled date of performance of tests. All detected roof leaks in the repaired areas shall be corrected by the Contractor at no additional cost to the Government and the tests repeated, when so directed by the Contracting Officer.

3.4 WARRANTY: Upon completion of the work by the Contractor and acceptance of work by the contract Performance Assessment Representative (PAR), the Contractor shall provide to the Contracting Officer a written 5-year warranty stating that the roofing work, as completed, is free from defective materials and workmanship. If repairs become necessary (within

a warranty period) due to defective material or workmanship, the Contractor shall satisfactorily repair such defective work upon written request and at no additional cost to the Government.

***** END OF SECTION *****

SECTION 07 57 13

SPRAYED POLYURETHANE FOAM (SPF)ROOFING

PART I - GENERAL

1. REFERENCES: The publications listed below form a part of this specification to the extent referenced. The publications, if referenced in the text, are by basic designation only. The latest edition of the referenced publications shall govern.

1.1.1 NORMA TECNOLOGICA DE LA EDIFICACION (NTE):

NTE-QAN/1973	Cubiertas: Azoteas no transitables.

1.1.2 AMERICAN SOCIETY FOR TESTING AND MATERIALS (ASTM):

ASTM D 413	Rubber Property - Adhesion to Flexible Substrate

1.1.3 SOCIETY OF THE PLASTICS INDUSTRY, INC. (SPI):

SPI AY-104	Spray Polyurethane Foam and Protective Coating Systems for New and Remedial Roofing

1.2 SUBMITTALS: Submit the following in accordance with Section 01 33 00, titled "Submittals procedures":

1.2.1 Spray Polyurethane Foam:

1.2.1.1 Manufacturer's Catalog Data for Polyurethane Foam and Primers:
Manufacturer's literature including material description, physical properties, recommended storage conditions, and shelf life expiration date.

1.2.1.2 Instructions: Application details and instructions, warnings or precautions on flammability and toxicity. Include manufacturer's written recommendations for primers and for surface preparation of galvanized iron or other metal, concrete, built-up roofing, or other surfaces.

1.2.1.3 Statements:

1.2.1.3.1 Sprayed Polyurethane Foam: Submit a written statement or other certification showing SPF material shelf life expiration date.

1.2.1.3.2 Qualification of Applicator: Certify that the applicator meets requirements specified under paragraph entitled "Qualifications of Applicator".

1.2.1.4 Sprayed Polyurethane Foam (SPF) Samples: Submit two pieces, each a minimum of 5 cm (2 in) thick and 0.0929 m^2 (1 sq.foot), spray applied on plywood. Not less than "verge of popcorn" surface texture, the roughest surface texture acceptable in SPI AY-104.

1.2.2 Protective elastomeric coating.

1.2.2.1 Manufacturer's Catalog Data:

a. Roof coating (include physical properties of the coating)
b. Primer

c. Sealant
d. Mineral granules

1.2.2.2 Manufacturer's Standard Color Charts:

a. Mineral granules

1.2.2.3 Instructions:

a. Roof coating application

1.2.2.4 Statements:

a. Qualifications of Applicator: Submit manufacturer's certification that the applicator meets requirements specified in paragraph entitled "Qualifications of Applicator."

1.2.2.5 Field Test Reports:

a. Wet film thickness
b. Coating thickness

1.2.2.6 Records:

a. Warranty

1.3 QUALITY ASSURANCE:

1.3.1 Qualifications of Applicator: The SPF applicator shall be approved by the roof coating manufacturer.

1.3.2 Fire Safety: When tested as a composite system, the sprayed SPF and elastomeric protective coating shall meet the following requirements:

1.3.2.1 Roof Covering: Provide roof covering material for exterior fire exposure; UL 790, Class A rating. Composite roof systems shall be included in the UL BMD for use as a roof covering material.

1.3.2.2 Roof Deck Assembly: Composite roof systems, including roof deck, shall be either of the following:

a. Listed by UL BMD as fire-classified, for use over a combustible or metal roof deck and classified as meeting interior fire exposure requirements for UL 1256 for the indicated roof deck construction.

b. Listed by FM P7825 as a Class I System.

1.3.3 Pre-Roofing Conference: Prior to starting the roofing system application, the Contractor shall conduct a pre-roofing conference with the Contracting Officer to ensure that the Contractor clearly understands the drawings and specifications. Conflicts among those attending the pre-roofing conference shall be resolved and confirmed in writing prior to starting the work.

1.3.4 Qualifications of Applicator: Applicator shall be qualified and certified by the roof coating manufacturer for application of roofing system and obtaining the specified warranty.

1.4 DELIVERY, STORAGE, AND HANDLING:

1.4.1 The Contractor shall deliver and store all materials in their original, tightly sealed containers or unopened packages, provide weatherproof storage for materials, maintain temperatures in the storage area below materials' flash point

temperatures and within limits recommended by manufacturer, and clearly label containers and packages with manufacturer's name, product identification, date of manufacture, shelf-life expiration date, UL labels, and lot number where appropriate. Where materials are covered by a referenced specification, labels shall bear the specification number, type, and class, as applicable.

1.4.1.1 The Contractor shall deliver and store materials in sufficient quantity to allow an uninterrupted flow of work.

1.5 ENVIRONMENTAL CONDITIONS:

1.5.1 The Contractor shall not apply roof coatings during inclement weather or when wind speed exceeds 15 mph, unless windscreen devices are used to ensure proper application of the coating to the required thickness, and upon prior approval of the Performance Assessment Representative (PAR). Roof coatings shall not be applied when ice, frost, surface moisture, or visible dampness is present on the surface to be coated, or when precipitation is imminent. Prior to application of the roof coating, check the polyurethane foam with a moisture resistance meter to ensure that foam is dry. Apply roof coating between ambient temperature ranges of 5^0 to 38^0 C. (40^0 to 100^0 F).

1.5.2 Primer: Do not apply primer during inclement weather or when wind speed over an unprotected roof work area exceeds 15 mph. Follow primer manufacturer's application requirements, except that no primer shall be applied when ambient temperature is below 4.5^0 C (40^0 F) or when ambient temperature is expected to fall below 1.7^0 C (35^0 F) during drying/curing period.

1.5.3 Sprayed Polyurethane Foam (SPF): Do not spray SPF on roof surfaces when wind speed in the work area exceeds 12 mph, unless windscreen protection is used. When wind speed exceeds 25 mph, suspend spraying. Do not apply sprayed SPF if the roof surface temperature is less than 10^0 C (50^0 F), higher than 49^0 C (120^0 F), or is less than -15^0 C (5^0 F) above the dew point. Determine the dew point at the job site prior to and upon completion of each work day unless variable weather conditions require more frequent monitoring. The wet bulb and dry bulb temperatures during application of SPF shall be within the ranges recommended by the SPF manufacturer. Take wet bulb and dry bulb temperatures at the beginning of foaming, end of foaming, and at 2 hour intervals during foaming.

1.6 WARRANTY:

1.6.1 The roofing system warranty shall provide, but not be limited to the following:

a. Warranty shall be issued directly to the Government and shall not be subject to monetary limitations.

b. Warranty period shall be not less than 5 years from the date of Government acceptance of the work.

c. Warranty shall cover materials and workmanship as follows:

(1) Warranty shall cover the roof coating and the polyurethane foam insulation which is specified in Section 07 57 13 titled, "SPRAYED POLYURETHANE FOAM (SPF) FOR ROOFING SYSTEMS".

(2) Warranty shall provide that if the roof coating blisters, cracks, splits, delaminates, or becomes non-watertight during the warranty period due to deterioration of the roof coating or the polyurethane foam, resulting from defective materials or workmanship, repair or replacement of the defective materials and correction of the defective workmanship shall be the responsibility of the roof coating manufacturer and the Contractor jointly and severally. Emergency repair of the roofing system performed by others shall not void the warranty.

1.7 FOAM SPRAY EQUIPMENT:

1.7.1 Applicator: Use an airless foam spray gun of the mechanical, self cleaning type, that does not require a flushing solvent during the spray operation.

1.7.2 Metering Equipment Calibration: Fully calibrate the foam metering equipment to monitor each liquid component to within 2 percent of the foam material manufacturer's required metering ratio. Calibrate spray equipment each day at start of operations, after each restart if spraying operations have been terminated for more than one hour, whenever there is a change

in fan pattern or pressure, whenever slow curing areas are noticed, whenever a change is made in hose length or working height, and after changeover between materials.

1.7.3 Metering Equipment Requirements: Use foam metering equipment capable of developing and maintaining the foam manufacturer's required liquid component pressures and temperatures. Foam metering equipment shall have gauges for visual monitoring.

1.7.4 Moisture Protection: Protect the surfaces of component supply containers or tanks used to feed the foam metering equipment from moisture by blanketing them with dry nitrogen or dry air if approved by the SPF materials manufacturer.

1.7.5 Compressed Air: Supply compressed air in contact with foam components during mixing or atomization through moisture traps that are continuously bled.

1.7.6 Dispense Excess Materials: Do not deposit materials used for cleaning of equipment or materials dispensed for calibration purposes and establishment of spray gun pattern on the roof surfaces to be sprayed. Dispense such materials into scrap containers or onto plastic film, or cardboard, and dispose of in compliance with safety requirements and job site regulation

1.8 WORK SEQUENCE: Schedule the work in order to prevent using newly constructed roofing for storage, walking surface, or material or equipment movement. If access is necessary, protect new roofing surfaces, flashings, and mechanical equipment. Repair damage which does occur and notify the Contracting Officer within three days of the repairs.

1.9 SPECIAL SAFETY PROVISIONS: During application, the following shall be required unless in conflict with the manufacturer's recommendations or requirements of a recognized legal authority, in which case, the manufacturer's recommendations or the legal authority's requirements take precedence:

1.9.1 Special Equipment:

1.9.1.1 Air Masks: Wear fresh air supply masks when applying foam or when handling hazardous liquid materials. Respiratory protective devices shall be as recommended by ANSI Z88.2. Instruct personnel required to use respiratory protective devices in the use of the devices. Maintain such equipment and inspect regularly.

1.9.1.2 Eye and Face Masks: Use eye and face protection during SPF application. Eye and face protective equipment shall meet the requirements of ANSI Z87.1.

1.9.1.3 Clothing and Gloves: Wear protective clothing and gloves during SPF application. Skin areas not covered by clothing shall be protected by protective creams.

1.9.2 Handling Precautions:

1.9.2.1 Venting the "B" Drum: Pressure develops when "B" component drums are at temperatures above 22^0 C (72^0 F). Therefore, when opening the "B" (polyol) foam component material drum, begin by partially unscrewing the bung cap to gradually vent the drum.

1.9.2.2 Opening the "A" Drum: When opening the "A" (isocyanate) foam component material drum, do not inhale vapors. Decontaminate empty nonreturnable "A" component drums by filling with water and allowing to stand for 48 hours with bung caps removed. Under no circumstances seal, stop, or close the drums which have been emptied of the "A" foam component.

PART II - PRODUCTS:

2.1 POLYURETHANE FOAM (SPF) MATERIALS: The SPF shall be a two-part component system made by combining an isocyanate (A) component with a polyol (B) component conforming to the requirements specified below:

2.1.1 SPF Physical Characteristics: The cured, sprayed-in-place SPF shall possess these physical characteristics:

Properties	ASTM Test	Value	Units
Density (Sprayed-in-Place)	ASTM D 1622	40.05 - 56.07 2.50 - 3.50	kg/m^3 lb/ft^3
K-Factor (Aged)	ASTM C 177 or ASTM C 518	0.43 (max) 0.16 (max)	$kcal/m^2/hr$ $Btu/ft^2/hr$
Compressive Strength (parallel to Foam Rise)	ASTM D 1621 in.	2.76 (minimum) 40 (minimum)	kg/cm^2 lb/in^2
Shear Strength	ASTM C 273	2.42 (minimum) 35 (minimum)	kg/cm^2 lb/in^2
Tensile Strength (Parallel to Foam Rise)	ASTM D 1623	4.14 (minimum) 60 (minimum)	kg/cm^2 lb/in^2
Dimensional Stability	ASTM D 2126	15 (maximum)	% net
Water Vapor Permeability	ASTM E 96	7.5 (maximum) 3.0 (maximum)	perm/cm perm/in
Percentage Closed/ Open Cells	ASTM D 2856	90 (minimum) 10 (maximum)	% by volume
Water Absorption	ASTM D 2842	0.488 (maximum) 0.10 (maximum)	kg/m^2 lb/ft^2.

2.1.2 Shelf Life: SPF material components shall have a minimum shelf life of six months.

2.1.3 Primers: Primers used shall be as required and recommended by the manufacturer of the spray foam materials specified except that no cut-back asphalt primers shall be permitted.

2.1.4 Roof Coating:

2.1.4 1 Roof coating shall be one or more of the following types:

2.1.4.1.1 Type CB Coating: Urethane aromatic elastomer, two component. Uncured urethane shall have the following values when tested for specified properties in accordance with specified test method:

PROPERTY	VALUE	TEST METHOD
Solids content - Minimum percentage by volume:	73	ASTM D 2697
Solids content - Percentage by weight, minimum:	81	ASTM D 2369
Flash point - Degrees C:	28	ASTM D 56 or ASTM D 93

2.1.4.1.1.1 Cured urethane aromatic elastomer shall have the following values when tested for specified properties in accordance with specified test method:

PROPERTY	VALUE	TEST METHOD
Solids content - Minimum percentage:	73	ASTM D 2

Elongation - Minimum percentage at 24^0 C and 50 percent relative humidity:	400	ASTM D 412
Tensile Strength - Minimum psi, at 24^0 C and 50 percent relative humidity: 1,000	ASTM D 412	
Permanent Set - At break, percentage:	25	ASTM D 412
Tear Resistance - Minimum kg/cm:	26	ASTM D 624
Ultraviolet Exposure - 6000 hours in atlas xenon or carbon weather-ometer:	ASTM D 822 ASTM G 26 No cracking, checking, loss of flexibility or significant discoloration.	ASTM G 53
Water Absorption - 168 hours, 24^0 C percent maximum weight:	2.0	ASTM D 471
Durometer Hardness - Shore A:	60	ASTM D 2240
Permeability - U.S. perm, procedure B, 20 mils. thickness, maximum:	1.0	ASTM E 96

2.1.4.1.2 Type CT Coating: Urethane aliphatic elastomer, two component, cured elastomer shall have no urethane groups bonded directly to aromatic rings. Uncured urethane shall have the following values when tested for specified properties in accordance with specified test methods:

PROPERTY	VALUE	TEST METHOD
Solids content - minimum percentage by volume:	55	ASTM D 2697
Solids content - minimum percentage by weight:	69	ASTM D 2369
Flash point - :	22	ASTM D 56 or ASTM D 93

2.1.4.1.2.1 The cured aliphatic urethane elastomer shall have the following values when tested for specified properties in accordance with specified test method:

PROPERTY	VALUE	TEST METHOD
Elongation - minimum percentage at 24^0 C and 50 percent relative humidity:	150	ASTM D 412
Tensile Strength - minimum psi at 24^0 C and 50 percent relative humidity:	110	ASTM D 412
Permanent Set - at break, percentage:	15	ASTM D 412
Tear Resistance - minimum Kg/cm:	34	ASTM D 624
Ultraviolet Exposure - 6000 hours in atlas xenon or carbon weather ometer:	No cracking, checking, or loss of	ASTM D 822 ASTM G 26 ASTM G 53

	flexibility or significant discoloration.	
Water Absorption - 168 hours @ 24^0 C percent maximum weight:	2.8	ASTM D 471
Durometer Hardness - Shore A, minimum:	80	ASTM D 2240
Permeability - U.S. perm, procedure B, 20 mils. thickness, maximum:	1.0	ASTM E 96

2.1.4.1.3 Type EB Coating: Aromatic urethane base coat, single component, moisture-cured. Uncured urethane shall have the following values when tested for specified properties in accordance with specified test method:

PROPERTY	VALUE	TEST METHOD
Solids Content - Minimum percentage by volume:	83	ASTM D 2697
Solids Content - Minimum percentage by weight:	90	ASTM D 2697
Flash Point - Minimum degrees C:	38	ASTM D 56 or ASTM D 93

2.1.4.1.3.1 Cured aromatic urethane elastomer shall have the following values when tested for specified properties in accordance with specified test method:

PROPERTY	VALUE	TEST METHOD
Elongation - Minimum percentage, at 24^0 C and 50 and percent relative humidity:	265	ASTM D 412
Tensile Strength - Minimum Kg/cm at 24^0 C and 50 percent relative humidity:	10	ASTM D 412
Permanent Set - At break, percentage:	18	ASTM D 412
Tear Resistance - Minimum Kg/cm:	9.6	ASTM D 624
Ultraviolet Exposure - 6000 hours in atlas xenon or carbon weather-ometer:	No cracking, checking, or loss of flexibility or significant discoloration.	ASTM D 822 ASTM G 26 ASTM G 53
Water Absorption - 168 hours @ 24^0 C percent maximum weight:	8	ASTM D 471
Durometer Hardness - Shore A (minimum):	45	ASTM D 2240
Permeability - U.S. perm, 20 mils minimum thickness:	5.0	ASTM E 96

		[procedure B]
Low Temperature Flexibility: @ -26^0 C, 0.5 1.27 cm mandrel before and following 500 hours in weatherometer.	No cracking	ASTM C 793
180 Degree Peel Adhesion: (adhesive failure):	No coating dry and after one week water soak.	ASTM D 413

2.1.4.1.4 Type ET Coating: Aromatic urethane topcoat, single component, moisture-cured. Uncured urethane shall have the following values when tested for specified properties in accordance with specified test method:

PROPERTY	VALUE	TEST METHOD
Solids Content - Minimum percentage by volume:	50	ASTM D 2697
Solids Content - Minimum percentage by weight:	64	ASTM D 2697
Flash Point - Degrees C:	100	ASTM D 56 or ASTM D 93

2.1.4.1.4.1 Cured aromatic urethane elastomer shall have the following values when tested for specified properties in accordance with specified test method:

PROPERTY	VALUE	TEST METHOD
Elongation - Minimum percentage, at 24^0 C and 50 and percent relative humidity:	265	ASTM D 412
Tensile Strength - Minimum Kg/cm² at 24^0 C and 50 percent relative humidity:	10	ASTM D 412
Permanent Set: At break, percentage	18	ASTM D 412
Tear Resistance: Minimum pounds per linear inch.	55	ASTM D 624
Ultraviolet exposure: 6000 hours in atlas xenon or carbon weather-ometer.	No cracking, checking, or loss of flexibility or significant discoloration.	ASTM D 822 ASTM G 26 ASTM G 53
Water Absorption: 168 hours, @ 24^0 C, percent maximum weight	8	ASTM D 471
Durometer hardness: Shore A (minimum).	45	ASTM D 2240
Permeability: U.S. perm, 20 mils thickness, maximum.	5.0	ASTM E 96 [procedure B]

Low temperature flexibility: @ -26^0 C, 1.27 cm. mandrel, before and following 500 hours in weatherometer.	No cracking	ASTM C 793
180 Degree Peel Adhesion: (adhesive failure)	No coating dry and after one week water soak.	ASTM D 413

2.1.4.1.5 Type EH Coating: Chlorosulphonated polyethylene (Hypalon) topcoat, single component. Uncured chlorosulphonated polyethylene shall have the following values when tested for specified properties in accordance with specified test method:

PROPERTY	VALUE	TEST METHOD
Solids content: minimum percentage by volume.	50	ASTM D 2697
Solids content: minimum percentage by weight.	64	ASTM D 2697
Flash point: Degrees C:	22	ASTM D 56 or ASTM D 93

2.1.4.1.5.1 Chlorosulphonated polyethylene elastomer shall have the following values when tested for specified properties in accordance with specified test method:

PROPERTY	VALUE	TEST METHOD
Elongation: minimum percentage, at 24^0 C and 50 and percent relative humidity.	265	ASTM D 412
Tensile Strength: minimum Kg/cm² at 24^0 C and 50 percent relative humidity.	150	ASTM D 412
Permanent Set: At break, percentage	18	ASTM D 412
Tear Resistance - minimum Kg/cm²:	10	ASTM D 624
Ultraviolet exposure - 6000 hours in atlas xenon or carbon weather-ometer. flexibility	No cracking, checking, or loss of or significant discoloration.	ASTM D 822 ASTM G 26 ASTM G 53
Water Absorption - 168 hours, @ 24^0 C percent maximum weight	8	ASTM D 471
Durometer Hardness - Shore A (minimum).	45	ASTM D 2240
Permeability: U.S. perm, 20 mils thickness, maximum.	5.0	ASTM E 96 [procedure B]
Low Temperature Flexibility - @ -26^0 C, 1.27 cm mandrel, before		

and following 500 hours in weatherometer:	No cracking	ASTM C 793
180 Degree Peel Adhesion: (adhesive failure):	No coating dry and after one week water soak.	ASTM D 413

2.2 PRIMER:

2.2.1 Primer shall be as recommended by the coating and foam manufacturers.

2.3 SEALANT:

2.3.1 Sealant shall be as recommended by the coating manufacturer.

2.4 MINERAL GRANULES:

2.4.1 Aggregate surfacing shall be siliceous mineral granules, 98 percent passing the No. 10 sieve and 98 percent retained on the No. 35 sieve. Granules shall be free of fines and dust. One-color granule surfacing shall be used and the granule color shall be compatible with the color of the topcoat. Color of granules shall be as selected by the Contracting Officer from the manufacturer's samples and descriptive literature.

2.5 STANDARD COLOR:

2.5.1 The coating color shall be as specified on the delivery order or as directed by the QAE.

PART III - EXECUTION

3.1 SPECIAL PRECAUTIONS AND INSTRUCTIONS:

3.1.1 Safe Working Load Limits: Do not place materials or equipment on the roof deck exceeding the indicated live load limits of the roof construction.

3.1.2 Primers: Do not dilute primers or other materials unless required and recommended by the manufacturer. Do not use cleaning solvents for thinning primers or other materials.

3.1.3 Material Handling: Handle materials and containers during application work safely and in accordance with recommendations of the manufacturer. Store liquids in airtight containers and keep containers closed except when removing materials. Do not use equipment or containers containing remains of dissimilar materials or products.

3.1.4 Shoes: Wear clean, soft-soled shoes without heels while walking on roofing surfaces during installation.

3.1.5 Fire and Explosion Hazards: Prohibit open flames, sparks, welding, and smoking in the application area. Provide and maintain a fire extinguisher of appropriate type and size in the application area.

3.1.6 Warning Signs: Post warning signs a minimum of 45 meters (150 feet) from the application area stating the area is off limits to unauthorized persons and warning of the presence of flammable materials, irritating fumes, and potential of overspray damage.

3.1.7 Record each wet and dry bulb temperature readings, wind speed, humidity, and the time, date and area foamed on Information Card, Appendix A herein.

3.2 ROOF AREA PREPARATION:

3.2.1 Preapplication of the SPF System:

3.2.1.1 Pre-Application Inspection: Ensure that drains, curbs, cants, control joints, expansion joints, roof penetrations, perimeter walls, and equipment supports are in place prior to the application of the primer SPF.

3.2.1.2 Close Intake Vents: Seal off and shutdown air intake vents during SPF application. Give the Contracting Officer 7 days notice before shutting down ventilation equipment.

3.2.1.3 Surface Examination: Examine surfaces and correct defects that will adversely affect the roofing system application or performance.

3.2.1.4 Masking: Provide masking protection, as needed, to protect surfaces and property which are not to be primed or sprayed with foam. Provide drain plugs prior to application of SPF. Remove plugs after each work day.

3.2.2 Surface Preparation: Surfaces that are to be primed or receive spray foam application shall be dry; completely cured; free of grease, oils, dirt and other foreign matter; and prepared in accordance with the following:

3.2.2.1 Ferrous Metal: Sandblast iron and steel surfaces which are not primed, shop painted, or otherwise protected in accordance with SSPC SP 6. Remove loose rust and unsound primer from shop-primed iron and steel surfaces by scraping or wire brushing.

3.2.2.2 Nonferrous Metal: Clean galvanized metal, aluminum, and stainless steel surfaces as recommended by the manufacturer of the SPF.

3.2.2.3 Concrete Decks: Remove spalling and loose material from the concrete deck and prime, if required, in accordance with recommendations of the manufacturer of the SPF materials.

3.2.2.4 Wood Decks and Other Wood Surfaces: Prime untreated and unpainted surfaces. If painted, inspect surfaces for adhesion problems.

3.2.2.5 Existing Roof Covering Surfaces: Prepare existing roof covering systems to receive sprayed SPF in accordance with recommendations of manufacturer of the SPF materials.

3.3 Surface Preparation:

3.3.1 Apply roof coating on surfaces free of water, grease, oils, dirt, debris, and other foreign materials, and cured completely.

3.3.1.1 Urethane Foam Roof Insulation: Provide foam of the specified density. Surface of foam shall be free of ridges, bumps, excessive pinholes, and depressions and shall not exceed visual standards for "verge of popcorn" as defined by SPI PFCD GSPC or NCEL UG-0011 and by approved samples. Repair damaged top skin of insulation with extra brush-coats of coating or sealant. Remove surfaces of insulation which become damaged, overexposed to weather, or contaminated such that they cannot be cleaned and repaired to the satisfaction of the coating applicator, and provide new insulation.

3.3.1.2 Metal, Concrete, and Masonry Surfaces: Clean rust and scale from metal surfaces which are to receive roof coatings by abrasive cleaning or wire brushing. Wipe with an industrial solvent such as naphtha or mineral spirits. Wire brush concrete and masonry surfaces which are to receive roof coatings, and remove resulting dust.

3.3.2 Primer: Apply as recommended by the coating manufacturer.

3.3.3 Sealant: Apply as recommended by the coating manufacturer.

3.4 APPLICATION:

3.4.1 APPLICATION AND EQUIPMENT: The application of SPF and equipment requirements shall be in accordance with printed recommendations of the manufacturer of the SPF system material or as specified herein. In case of conflict, the manufacturer's instructions shall prevail.

3.4.1.1 Spray Foam: Apply foam to provide a minimum finished thickness of 38 mm (1-1/2 inches), in at least two spray passes. Apply each spray pass at right angles to the previous pass to the extent practicable. Thickness of each pass shall be in accordance with recommendations of manufacturer of the SPF.

3.4.1.2 Terminations: Unless otherwise indicated, conform with manufacturer's standard details, for foam thickness around drains, penetrations, curbs, and other terminations. Transitions between horizontal and vertical surfaces shall be smooth and sprayed at a nominal angle of 45 degrees.

3.4.1.3 Surface Uniformity: Do not exceed the minimum thickness of the foam by more than 0.635 cm (1/4 in). Apply the foam of a sufficient overall surface uniformity to prevent water ponding. The plane of the finished SPF shall not vary more than 0.635 cm (1/4 in) within an area 3 x 3 meters (10 x 10 ft) when checked with a 3 meter (10 ft) straightedge placed anywhere on the SPF.

3.4.1.4 Finish Appearance: The finished surface of applied foam shall be "verge of popcorn" or smoother in conformance with sample submitted under paragraph entitled "SD-50, Samples" and shall be free of pinholes.

3.4.1.5 Finish Correction: If the sprayed foam skin is removed to correct surface texture or to remove excess foam thickness, re-spray the cut surface with SPF at least 1.27 cm (1/2 in) thick to provide a protective foam skin prior to application of the elastomeric protective coating.

3.4.1.6 Finish Removal: Remove foam that is not bonded, of poor cell structure, wet, or otherwise does not meet the material quality specifications.

3.4.1.7 Application Time Limits: Do not start foam application on an area larger than can be brought to the specified full foam thickness and coated on the same day.

3.4.1.8 Foam Covering: Do not spray more foam in any one day than can be coated with a roof coating on the same day. No applied foam, except for leading edges, shall stand uncoated overnight.

3.4.1.9 Curing Time: Cure the applied foam for a minimum of 2 hours prior to application of the elastomeric protective coating.

3.4.1.10 Worker Protection: Use protective shields or barriers when spraying foam along open roof edges to prevent uncontrolled overspray.

3.4.2 Top Protective Coating: Apply to polyurethane foam insulation in accordance with this Section..

3.4.2.1 Apply roof coating on urethane foam insulation not less than 2 hours after but on the same day as installation of the insulation. Do not leave foam uncoated overnight except with written permission of the Contracting Officer. If permitted to leave foam uncoated overnight, coat foam at least within 72 hours. When left uncoated for up to 72 hours, foam surface shall be thoroughly inspected and degraded foam surface removed, cleaned, allowed to dry, and the prepared surface refoamed with at least 1.27 cm (1/2 in) of foam. Apply coating on insulation, and continue up walls and roof penetrations to a point where concealed behind counter flashings and up and over the top of parapet walls, where indicated. Provide terminal edges of the foam at roof penetrations and roof edges with an extra base coat back 7.62 cm (3 in) from the edge. Check roof coating during application in accordance with coating manufacturer's printed installation instructions to ensure that the wet mil thickness required for each coat is provided. For each coat, provide a dry film thickness not less than specified in paragraph entitled "Minimum Dry Film Thickness (DFT) in Mils." Provide smooth coatings free of runs, dry spray, or overspray, and provide a uniform film over the foam.

3.4.2.2 Base Coat Application: Apply Type CB or EB coating as the base coat. Apply in accordance with manufacturer's printed installation instructions. Apply coating uniformly and in one direction. Inspect the completed surface for blowholes, pinholes, cracks, breaks, voids, blisters, and other imperfections, and repair with base coat material. Clean areas of base coat which become dirty with a clean wet cloth, prior to application of intermediate coat. Check cured base coat to determine dry film thickness before applying the next coat.

3.4.2.3 Intermediate Coat Application: Apply Type CB or EB coating in same manner as base coat except apply in a direction perpendicular to the direction in which base coat was applied. Check cured intermediate coat to determine dry film thickness before applying topcoat. If base or intermediate coat thickness is deficient, apply additional intermediate coat prior to applying topcoat to bring total dry film thickness up to that required.

3.4.2.4 Topcoat Application: Apply Type CT, ET or EH coating as topcoat in accordance with manufacturer's printed installation instructions. Apply Type CT, ET or EH top coating at the specified rate, perpendicular to the direction in which intermediate coat is applied.

3.4.2.5 Overspray Masking: Provide masking protection as required to protect surfaces and property not to be sprayed.

3.4.2.6 Minimum Dry Film Thickness (DFT) in Mils:

Type	Base Coat	Intermediate Coat	Topcoat	Total
CB-Urethane	15	15	10	40
CT-Urethane	-	-	10	10
EB-M.C.	15	15	-	30
ET-M.C. Urethane	-	-	10	10
EH-Hypalon	-	-	10	10

Urethane

3.4.2.7 Aggregate Surfacing: Spray-apply mineral granules to topcoat, coating within 2 to 5 minutes after application of topcoating, depending on temperature and humidity, as required by roof coating manufacturer's printed installation instructions. Spray applicator equipment shall be a sand blasted with output pressure reduced to 1.75 to 3.5 kg/cm^2 (10 to 20 psi). Apply granules to surface evenly at a rate of 23 kg per 9 m^2 (50 lb per 100 square feet). Do not allow traffic on finished areas for 24 hours after granule application is completed.

3.5 FIELD QUALITY CONTROL:

3.5.1 Prior to application of base coat, place one 10 cm (4 in) square flat metal test plate on surface of foam insulation for every 9 m^2 (100 ft^2) to measure wet film thickness of coating during application. During application of intermediate and topcoats, place plates on surface of previously applied coat in same manner. Inspect top-coated foam by cutting a minimum of one 5 x 0.6 cm (2 x 1/4 in) deep V-shaped sample for every 90 m^2 (1000 ft^2) of roof area as selected at random by the Contracting Officer. One edge of the V-shaped sample shall be at a 90-degree angle to the coated surface. Examine and measure coating thickness of each sample with an optical comparator. Inspect samples at peaks of surface texture of foam, not at valleys. Do not average measurements of DFT of coating. Completely seal cut areas by filling them with and lapping over adjacent undisturbed coating with caulking material recommended by the coating manufacturer.

Recoat areas where representative samples indicate inadequate thicknesses and sample again until specified DFT is achieved.

3.6 CLEAN-UP:

3.6.1 Clean surfaces that receive roof coating materials which are not designated to receive such materials. Remove overspray masking materials and coverings upon completion of the spray work. Remove debris, scraps, waste materials, rubbish and trash from immediate work area at the end of each work day and place in the location designated by the Contracting Officer.

3.7 INFORMATION CARD

3.7.1 The Contractor shall complete and submit to the contract Performance Assessment Representative (PAR), an Information Card, in the format provided by Appendix A herein, for each completed roof.

APPENDIX A
INFORMATION CARD - FORM 1
POLYURETHANE FOAM ROOFING SYSTEM WORK

1. **CONTRACT NUMBER**: _____

2. **DATE WORK STARTED**: _____
   a. Wet Bulb Temperature: _____
   b. Dry Bulb Temperature: _____
   c: Wind Speed & Direction: _____
   d. Humidity: _____

3. **DATE WORK COMPLETED**:_____
   a. Wet Bulb Temperature: _____
   b. Dry Bulb Temperature: _____
   c: Wind Speed & Direction: _____
   d. Humidity: _____

4. **NAVFAC SPECIFICATION DESIGNATION**: _____
   (As applicable)

5. **SUBSTRATE**:
   a. Type(s): _____
   b. Slope: _____
   c. Moisture Content: _____
   d. Surface Condition:_____

6. **PRIMER**:
   a. Type(s): _____
   b. Application Quantity: _____
   c. Manufacturer: _____

7. **SPRAY POLYURETHANE FOAM**:
   a. Density/compressive strength: _____
   b. Thickness: _____
   c. Product name and manufacturer: _____

8. **ELASTOMERIC PROTECTIVE COATING**:
   a. Generic type: _____
   b. Number of coats/thickness: _____
   c. Product name and manufacturer: _____

9. **STATEMENT OF COMPLIANCE OR EXCEPTION**: (To be attached)

10. **WARRANTY DATES**:
    From: _____
    To: _____

11. WARRANTOR:

Name: _____

Address: _____

12. CONTRACTOR:

Name: _____

Signature: _____

Date: _____

13. INSPECTOR:

Name: _____

Signature: _____

Date: _____

**** END OF SECTION ****

SECTION 07 60 00

FLASHING AND SHEET METAL

PART I - GENERAL:

1.1 REFERENCES: The publications listed below form a part of this specification to the extent referenced. The publications, if referenced in the text, are by basic designation only. The latest edition of the referenced publications shall govern.

1.1.1 NORMAS TECNOLOGICAS DE LA EDIFICACION (NTE):

NTE-QTL	Cubiertas Tejados Aleaciones Ligeras.
NTE-QTG-1976	Tejados Galvanizados.
NTE-QAN/1973	Cubiertas: Azoteas no transitables.

1.1.2 AMERICAN SOCIETY FOR TESTING AND MATERIALS (ASTM):

ASTM A 525	Steel Sheet, Zinc-Coated (Galvanized) by the Hot-Dip Process

1.2 SUBMITTALS: Submit the following in accordance with Section 01 33 00, titled "Submittal procedures":

1.2.1 Samples: Submit the following samples for approval:

a. Sheet Metal Materials: Two pieces, 15 x 25 cm (6 x 10 in) of each type to be used.

b. Nails and Other Fastenings: Two of each type to be used.

1.2.2 Manufacturer's Catalog Data and Shop Drawings: Submit manufacturer's descriptive product data indicating thicknesses, dimensions, fastening and anchoring methods for the following items:

a. Gutters.
b. Downspouts.
c. Expansion joints.
d. Gravel stops and fascias.
e. Splash pans.
f. Flashing for roof drains.
g. Base flashing.
h. Counterflashing.
i. Flashing at roof penetrations.
j. Scuppers.
k. Copings.
l. Drip edge.
m. Open valley flashing.
n. Eave flashing.

1.2.3 Certificates of Conformance or Compliance: Submit for approval laboratory certificates attesting that materials meet the requirements specified herein.

1.2.4 Shop Drawings: Provide shop drawing for roof mounted duct and piping supports.

1.3 DELIVERY, HANDLING AND STORAGE: Materials shall be adequately packaged and protected during shipment and shall be inspected for damage, dampness, and wet-storage stains upon delivery to the job site. Damaged or permanently

stained materials that cannot be restored to like new condition shall be removed from the site and replaced. Carefully handle sheet metal items to avoid damage to surfaces, edges and ends. Crated materials shall not be uncrated until ready for use. Store materials in dry, weathertight, ventilated areas until immediately before installation.

PART II - PRODUCTS:

2.1 Materials: Materials shall conform to the respective specifications and to the requirements as specified herein. Furnish sheet metal items in 2.5 to 3.0 meter (8 to 10 foot) lengths. Single pieces less than 2.5 m long may be used at ends of runs. Provide accessories and other items essential to complete the sheet metal installation. These accessories shall be of the same materials as the items to which they are applied. Fabricate sheet metal items of the materials specified below and to the gage, thickness, or weight shown in Table I at the end of this Section. Sheet metal items shall have mill finish unless specified otherwise. Where more than one material is listed for a particular item in Table I, each is acceptable and may be used except as follows:

2.1.1 Exposed Sheet Metal Items: Shall be of the same material. The following items shall be considered as exposed sheet metal: gutters, including hangers; downspouts; gravel stops and fascias; cap, valley, steeped, base, and eave flashings and related accessories.

2.1.2 Drainage: Do not use copper for an exposed item if drainage from that item will pass over exposed masonry, stonework or other metal surfaces. In addition to the metals listed in Table I, lead-coated copper may be used for such items.

2.1.3 Copper, Sheet and Strip: ASTM B 370, cold-rolled temper.

2.1.4 Lead-Coated Copper Sheet: ASTM B 101.

2.1.5 Lead Sheet: FS QQ-L-201, Grade B, minimum weight 16 kg/m^2 (4 lb/ft^2).

2.1.6 Steel Sheet, Zinc-Coated (Galvanized): ASTM A 525.

2.1.6.1 Finish: Exposed exterior items of zinc-coated steel sheet shall have a baked-on, factory-applied color coating of polyvinylidene fluoride or other equivalent fluorocarbon coating applied after metal substrates have been cleaned and pretreated. Finish coating dry-film thickness shall be 0.8 to 1.3 mils and color shall be as specified.

2.1.7 Zinc Sheet and Strip: ASTM B 69, Type I, a minimum of 0.06 cm
(0.024 in) thick.

2.1.8 Aluminum Alloy Sheet and Plate: ASTM B 209, form alloy, and temper appropriate for use.

2.1.8.1 Alclad: When fabricated of aluminum, the following items shall be fabricated of Alclad 3003, Alclad 3004, Alclad 3005, clad on one side, unless otherwise indicated.

- **a.** Gutters, downspouts, and hangers
- **b.** Gravel stops and fascias
- **c.** Flashing.

2.1.8.2 Finish: Exposed exterior sheet metal items of aluminum shall have a baked-on, factory-applied color coating of polyvinylidene fluoride (PVF2) or other equivalent fluorocarbon coating applied after metal substrates have been cleaned and pretreated. Finish coating dry-film thickness shall be 0.8 to 1.3 mils, and color shall be as specified.

2.1.9 Aluminum Alloy, Extruded Bars, Rods, Shapes, and Tubes: Conforming to ASTM B 221.

2.1.10 Solder: Conforming to ASTM B 32.

2.1.11 Bituminous Plastic Cement: Conforming to MV-301 or ASTM D 4586, Type I.

2.1.12 Building Paper: Conforming to FS UU-B-790, Style 4, Grade B.

2.1.13 Asphalt Primer: Conforming to MV-301 or ASTM D 41.

2.1.14 Fasteners: Use the same metal or a metal compatible with the item fastened. Use stainless steel fasteners to fasten dissimilar materials.

PART III - EXECUTION:

3.1 INSTALLATION:

3.1.1 General Requirements: Make surfaces to receive sheet metal and fabricated roof mounted supports plumb and true, clean, even, smooth, dry, and free of defects and projections which might affect the application. For installation of items not shown in detail or covered by the specifications, conform to the applicable requirements of SMACNA ASMM, Architectural Sheet Metal Manual. Provide sheet metal flashing in the angles formed where roof decks abut walls, curbs, ventilators, pipes, or other vertical surfaces and wherever indicated and necessary to make the work watertight. Join sheet metal items together as shown in Table II.

3.1.2 Workmanship: Install sheet metal and fabricated roof mounted support work with lines, arises, and angles sharp and true. Exposed surfaces shall be free from visible wave, warp, buckle, and tool marks. Exposed edges shall be folded back neatly to form a 1 cm (1/2 in) hem on the concealed side. Sheet metal exposed to the weather shall be watertight with provisions for expansion and contraction.

3.2 Installation:

3.2.1 Nailing: Confine nailing of sheet metal generally to sheet metal having a maximum width of 46 cm (18 in). Confine nailing of flashing to one edge only. Space nails evenly not over 8 cm (3 in) on centers and approximately 1.25 cm (1/2 in) from edge unless otherwise specified or indicated. Face nailing will not be permitted. Where sheet metal is applied to other than wood surfaces, include in shop drawings, the locations for sleepers and nailing strips required to secure the work.

3.2.2 Cleats: Provide cleats for sheet metal 46 cm (18 in) and over in width. Space cleats evenly not over 30 cm (12 in) on centers unless otherwise specified or indicated. Unless otherwise specified, cleats shall be not less than 5 cm (2 in) wide by 7.5 cm (3 in) long and of the same material and thickness as the sheet metal being installed. Secure one end of the cleat with two nails and the cleat folded back over the nailheads. Lock the other end into the seam. Pretin cleats for soldered seams.

3.2.3 Bolts, Rivets, and Screws: Install bolts, rivets, and screws where indicated or required. Provide compatible washers where required to protect surface of sheet metal and to provide a watertight connection.

3.2.4 Seams: Straight and uniform in width and height with no solder showing on the face.

3.2.4.1 Flat-lock Seams: Finish not less than 2 cm (3/4 in) wide.

3.2.4.2 Lap Seams: Finish soldered seams not less than 1.25 cm (1 in) wide. Overlap seams not soldered, not less than 7.5 cm (3 in).

3.2.4.3 Loose-Lock Expansion Seams: Not less than 7.5 cm (3 in) wide; provide minimum 1.25 cm (1 in) movement within the joint. Completely fill the joints with the specified sealant, applied at not less than 0.3 cm (1/8 in) thick bed. Sealants are specified in Section 07920 titled "SEALANTS".

3.2.4.4 Standing Seams: Not less than 1.25 cm (1 in) high, double locked without solder.

3.2.4.5 Flat Seams: Make seams in the direction of the flow.

3.2.5 Soldering: Where soldering is specified, it shall apply to copper, and terne-coated steel.

3.2.5.1 Edges: Pretin edges of sheet metals before soldering. Slowly solder with well heated soldering irons so as to thoroughly heat the seams and completely sweat the solder through the full width of the seam. Scrape or wire-brush the edges of lead-coated material to be soldered to produce a bright surface. Flux brush the seams in before soldering. Treat with soldering acid flux the edges of stainless steel to be pretinned. Solder immediately after application of the flux. Upon completion of soldering, the acid flux residue shall be thoroughly cleaned from the sheet metal with a solution of washing soda in water and rinsed with clean water. Seal the joints in aluminum sheets of 1.02 mm (0.040 in) or less in thickness with specified sealants. Do not solder aluminum.

3.2.6 Welding and Mechanical Fastening: Use welding for aluminum of thickness greater than 1.02 mm (0.040 in). Aluminum 1.02 mm (0.040 in) or less in thickness shall be butted and the space backed with formed flashing plate; or lock joined, mechanically fastened, and filled with sealant as recommended by the aluminum manufacturer.

3.2.6.1 Welding of Aluminum: Use welding of the inert gas, shield-arc type. For procedures, appearance and quality of welds, and the methods used in correcting welding work, conform to AWS D1.2.

3.2.6.2 Mechanical Fastening of Aluminum: Use No. 12, aluminum alloy, sheet metal screws or other suitable aluminum alloy or stainless steel fasteners. Drive fasteners in holes made with a No. 26 drill in securing side laps, end laps, and flashings. Space fasteners 30 cm (12 in) maximum on centers. Where end lap fasteners are required to improve closure, locate the end lap fasteners not more than 5 cm (2 in) from the end of the overlapping sheet.

3.2.7 Protection from Contact with Dissimilar Materials:

3.2.7.1 Copper or Copper-bearing Alloys: Paint with heavy-bodied bituminous paint surfaces in contact with dissimilar metal, or separate the surfaces by means of moistureproof building felts.

3.2.7.2 Aluminum: Aluminum surfaces shall not directly contact other metals except stainless steel, zinc, or zinc coating. Where aluminum contacts another metal, paint the dissimilar metal with a primer followed by two coats of aluminum paint. Where drainage from a dissimilar metal passes over aluminum, paint the dissimilar metal with a non-lead pigmented paint.

3.2.7.3 Metal Surfaces: Paint surfaces in contact with mortar, concrete, or other masonry materials with alkali-resistant coatings such as heavy-bodied bituminous paint.

3.2.7.4 Wood or Other Absorptive Materials: Paint surfaces that may become repeatedly wet and in contact with metal with two coats of aluminum paint or a coat of heavy-bodied bituminous paint.

3.2.8 Expansion and Contraction: Provide expansion and contraction joints at not more 7.3 meter (32 foot intervals for aluminum and at not more than 12.2 meter (40 foot) intervals for other metals. Where the distance between the last expansion joint and the end of the continuous run is more than half the required interval, an additional joint shall be provided. Space joints evenly. Join extruded aluminum gravel stops and fascias by expansion and contraction joints spaced not more than 3.6 meters (12 feet) apart.

3.2.9 Base Flashing: Lay the base flashings with each course of the roof covering, shingle fashion, where practicable, where sloped roofs abut chimneys, curbs, walls, or other vertical surfaces. Extend up vertical surfaces of the flashing not less than 20 cm. (8 inches) and not less than 10 cm (4 in) under the roof covering. Where finish wall coverings form a counterflashing, extend the vertical leg of the flashing up behind the applied wall covering not less than 15 cm (6 in). Overlap the flashing strips, or shingles, with the previously laid flashing not less than 7.5 cm (3 in). Fasten the strips, or shingles, at their upper edge to the deck, with compatible, large-head roofing nails. Solder end laps and provide for expansion and contraction. Extend the metal flashing over crickets at the up-slope side of chimneys, curbs, and similar vertical surfaces extending through sloping roofs. Extend the metal flashings onto the roof covering not less than 11. 4 cm (4.5 in) at the lower side of dormer walls, chimneys, and similar vertical surfaces extending through the roof decks. Install and fit the flashings so as to be completely weathertight. Base flashing for interior and exterior corners shall be factory fabricated.

3.2.10 Counterflashing: Except where indicated or specified otherwise, insert counterflashing in reglets located from 23 to 25 cm (9 to 10 in) above roof decks, extend down vertical surfaces over upturned vertical leg of base flashings not less than 7.5 cm (3 in). Fold the exposed edges of counterflashings 2.5 cm (1/2 in). Where stepped counterflashings are required, they may be installed in short lengths or may be of the preformed one-piece type. Provide end laps in counterflashings not less than 7.5 cm (3 inches) and make it weathertight with plastic cement. Do not make lengths of metal counterflashings exceed 3 meters (10 feet). Form the flashings to the required shapes before installation. Factory-form the corners not less than 30 cm (12 in) from the angle. Secure the flashings in the reglets with lead wedges and space not more than 46 cm (18 in) apart; on chimneys and short runs, place wedges closer together. Fill caulked-type reglets or raked joints which receive counterflashing with caulking compound. Caulking is covered in Section 07920 titled "SEALANTS". Turn up the concealed edge of counterflashings built into masonry or concrete walls not less than 0.6 cm (1/4 in) and extend not less than 5 cm (2 in) into the walls. Install counterflashing to provide a spring action against base flashing.

3.2.11 Gravel Stops and Fascias: Prefabricate in the shapes and sizes indicated and in lengths not less than 2.4 meters (8 feet). Extend flange at least 10 cm (4 in) onto roofing. Provide prefabricated, mitered corners internal and external corners. Install gravel stops and fascias after all plies of the roofing membrane have been applied, but before the flood coat of bitumen is applied. Prime roof flange of gravel stops and fascias on both sides with an asphalt primer. After primer has dried, set flange on roofing membrane and strip-in as specified. Nail flange securely to wood nailer with large-head, barbed-shank roofing nails 3.8 cm (1.5 in) long spaced not more than 7.5 cm (3 in) on centers.

3.2.11.1 Edge Strip: Hook the lower edge of fascias at least 2 cm (3/4 in) over a continuous strip of the same material bent outward at an angle not more than 45 degrees to form a drip. Nail hook strip to a wood nailer at 15 cm (6 in) maximum on centers. Where fastening is made to concrete or masonry, use screws spaced 30 cm (12 in) on centers driven in expansion shields set in the concrete or masonry. Where horizontal wood nailers are slotted to provide for insulation venting, install strips to prevent obstruction of vent slots. Where necessary, install strips over 1.6 mm (1/16 in) thick compatible spacer or washers.

3.2.11.2 Joints: Leave open the section ends of gravel stops and fascias 6 mm (1/4 in) and backed with a formed flashing plate, mechanically fastened in place and lapping each section end a minimum of 10 cm (4 in). Set laps in plastic cement. Face nailing will not be permitted. Install prefabricated aluminum gravel stops and fascias in accordance with the manufacturer's printed instructions and details.

3.2.12 Metal Drip Edge: Provide a metal drip, designed to allow water run-off to drip free of underlying construction, at eaves and rakes prior to the application of roofing shingles. Apply directly on the wood deck at the eaves and over the underlay along the rakes. Extend back from the edge of the deck not more than 7.5 cm (3 in) and secure with compatible nails spaced not more than 25 cm (10 in) on center along upper edge.

3.2.13 Gutters: The hung type of shape indicated and supported on underside by brackets that permit free thermal movement of the gutter. Provide gutters in sizes indicated complete with mitered corners, end caps, outlets, brackets, and other accessories necessary for installation. Bead or reinforce the outer edge of gutter with a stiffening bar not less than 2 x 0.5 cm (3/4 x 3/16 in) of material compatible with gutter. Fabricate gutters in sections not less than 2.4 meters (8 feet). Lap the sections a minimum of 2.5 cm (1 in) in the direction of flow or provide with concealed splice plate 15 cm (6 in) minimum. Join the gutters, other than aluminum, by riveted and soldered joints. Aluminum gutters shall be joined with riveted sealed joints. Provide expansion-type slip joints midway between outlets. Install gutters below slope line of the roof so that snow and ice can slide clear. Support gutters on adjustable hangers spaced not more than 76 cm (30 in) on center or as recommended by the manufacturer. Adjust gutters to slope uniformly to outlets, with high points occurring midway between outlets. Fabricate hangers and fastenings from metals compatible with the gutters.

3.2.14 Downspouts: Types, shapes and sizes are indicated. Provide complete including elbows and offsets. Provide downspouts in approximately 3 meter (10 foot) lengths. Provide end joints to telescope not less than 1.25 cm (1/2 in) and lock longitudinal joints. Provide gutter outlets with wire ball strainers for each outlet. Provide strainers to fit tightly into outlets and be of the same material used for gutters. Keep downspouts not less than 2.5 cm (1 in) away from walls. Fasten to the walls at top, bottom, and at an intermediate point not to exceed 1.5 meters (5 feet) on centers with leader straps or concealed rack-and-pin type fasteners. Form straps and fasteners of metal compatible with the downspouts.

3.2.14.1 Terminations: Neatly fit into the drainage connection the downspouts terminating in drainage lines and fill the joints with a portland cement mortar cap sloped away from the downspout. Provide downspouts terminating in splash blocks with elbow-type fittings. Concrete splash block is specified in Section 03301 titled , "CAST IN-PLACE CONCRETE".

3.2.15 Scuppers: Line interior of scupper openings with sheet metal. Extend the lining through and project outside of the wall to form a drip on the bottom edge and form to return not less than 2.5 cm. (1 in) against the face of the outside wall at the top and sides. Fold outside edges under 1.25 cm (1/2 in) on all sides. Provide the perimeter of the lining approximately 1.25 cm (1/2 in) less than the perimeter of the scupper. Join the top and sides of the lining on the roof deck side to a closure flange by a locked and soldered joint. Join the bottom edge by a locked and soldered joint to the closure flange, where required, form with a ridge to act as a gravel stop around the scupper inlet. Provide surfaces to receive the scupper lining and coat with bituminous plastic cement. Mechanically fasten joints in aluminum and seal.

3.2.16 Conductor Heads: Type indicated and fabricated of the same material as the downspouts. Set the depth of top opening equal to two-thirds of the width. Provide outlet tubes not less than 10 cm (4 in) long. Flat-lock solder the seams except the mechanically fastened aluminum joints filled with a hard setting sealant. Where conductor heads are used in conjunction with scuppers, set the conductor a minimum of 5 cm (2 in) wider than the scupper. Attach conductor heads to

the wall with masonry fasteners, and loose-lock to provide conductor heads with screens of the same material. Securely fasten screens to the heads.

3.2.17 Splash Pans: Install splash pans where downspouts discharge on roof surfaces and at other locations as indicated. Unless otherwise shown, provide pans not less than 61 cm long by 46 cm wide (24 inches long by 18 inches wide) with metal ribs across the bottom of the pan. Form the sides of the pan with vertical baffles not less than 2.5 cm (1 in) high in the front, and 10 cm (4 in) high in the back doubled over and formed continuous with horizontal roof flanges not less than 10 cm (4 in) wide. Bend the rear flange of the pan to contour of cant strip and extend up 15 cm (6 in) under the side wall covering or to height of base flashing under counterflashing. Bed the pans and roof flanges in plastic bituminous cement and strip-flash.

3.2.18 Open Valley Flashing: Provide valley flashing free of longitudinal seams, of width sufficient to extend not less than 15 cm (6 in) under the roof covering on each side. Provide a 1.25 cm (1/2 in) fold on each side of the valley flashing. Lap the sheets not less than 15 cm (6 in) in the direction of flow and secure to roofing construction with cleats attached to the fold on each side. Nail the tops of sheets to roof sheathing. Space the cleats not more than 30 cm (12 in) on centers. Provide exposed flashing not less than 10 cm (4 in) in width at the top and increase one 2.5 cm (1 in) in width for each additional 2.4 meters (8 feet) in length. Where the slope of the valley is 37 cm/m (4.5 in/ft) or less, or the intersecting roofs are on different slopes, provide an inverted V-joint, 2.5 cm (1 in) high, along the centerline of the valley; and extend the edge of the valley sheets 20 cm (8 in) under the roof covering on each side.

3.2.19 Eave Flashing: One piece in width, applied in 2.5 to 3 meter (8 to 10 ft) lengths with expansion joints spaced as specified in paragraph entitled "Expansion and Contraction." Provide a 2 cm (3/4 in) continuous fold in the upper edge of the sheet to engage cleats spaced not more than 25 cm (10 in) on centers. Locate the upper edge of flashing not less than 46 cm (18 in) from the outside face of the building, measured along the roof slope. Fold lower edge of the flashing over and loose-lock into a continuous edge strip on the fascia. Where eave flashing intersects metal valley flashing, secure with one-inch flat locked joints with cleats that are 25 cm (10 in) on centers. Place eave flashing over underlayment and in plastic bituminous cement.

3.2.20 Sheet Metal Covering on Flat, Sloped, or Curved Surfaces: Except as specified or indicated otherwise, cover and flash all minor flat, sloped, or curved surfaces such as crickets, bulkheads, dormers and small decks with metal sheets of the material used for flashing; maximum size of sheets, 41 x 46 cm (16 by 18 in). Fasten sheets to sheathing with metal cleats. Lock seams and solder. Lock aluminum seams and fill with sealer as recommended by aluminum manufacturer. Provide an underlayment of building paper for all sheet metal covering.

3.2.21 Expansion Joints: Provide expansion joints for roofs, walls, and floors where indicated and conform to the requirements of Table I.

3.2.21.1 Roof Expansion Joints: Consist of curb with wood nailing members on each side of joint, bituminous base flashing, metal counterflashing, and metal joint cover. Polymeric asphalt sheet base flashing is specified in Section 07 52 00 titled "Installation of Styrene Butadiene Styrene (SBS) modified bituminous membrane roofing". Provide counterflashing as specified in paragraph "Counterflashing," except as follows: Provide counterflashing with vertical leg of suitable depth to enable forming into a horizontal continuous cleat. Secure the inner edge to the nailing member. Make the outer edge projection not less than 2,5 cm. (1 inch) for flashing on one side of the expansion joint and be less than the width of the expansion joint plus 2,5 cm. (1 inch) for flashing on the other side of the joint. Hook the expansion joint cover over the projecting outer edges of counterflashing. Provide roof joint with a joint cover of the width indicated. Hook and lock one edge of the joint cover over the shorter projecting flange of the continuous cleat, and the other edge hooked over and loose locked with the longer projecting flange. Joints are specified in Table II.

3.2.21.2 Floor and Wall Expansion Joints: Provide U-shape with extended flanges for expansion joints in concrete and masonry walls and in floor slabs.

3.2.22 Flashing at Roof Penetrations and Equipment Supports: Provide metal flashing for all pipes, ducts, and conduits projecting through the roof surface and for equipment supports, guy wire anchors, and similar items supported by or attached to the roof deck.

3.2.22.1 Single Pipe Vents: See Table I, footnote (b). Set flange of sleeve in bituminous plastic cement and nail 7.5 cm (3 in) on center. Bend the top of sleeve over and extend down into the vent pipe a minimum of 5 cm (2 in). For long runs or long rises above the deck, where it is impractical to cover the vent pipe with lead, use a two-piece formed metal housing. Set metal housing with a metal sleeve having a 10 cm (4 in) roof flange in bituminous plastic cement and nailed 7.5 cm (3 in) on

centers. Extend sleeve a minimum of 20 cm (8 in) above the roof deck and lapped a minimum of 7.5 cm (3 in) by a metal hood secured to the vent pipe by a draw band. Seal the area of hood in contact with vent pipe with an approved sealant. Sealants are covered under Section 07920 titled "SEALANTS".

3.2.23 Copings: Provide coping using copper sheets 2.4 to 3 meters (8 to 10 feet) long joined by a 2 cm (3/4 in) locked and soldered seam. Terminate outer edges in edge strips.

3.2.24 Roof Mounted Duct and Piping Supports: Supports shall be fabricated of extruded aluminum tubing. The size and shape of the supports shall be determined by the Contractor. Supports shall be designed so that ducts and/or piping can be securely fastened in place, allowing for contraction and expansion. Supports shall be secured to the roof deck with bolts, and shall be flashed as specified herein.

3.3 PAINTING: Field-paint sheet metal for separation of dissimilar materials. Paint shall conform to Federal Specification FS TT-P-102 (Paint, Oil Alkyd Modified, Exterior, White and Tints).

3.4 CLEANING: Clean exposed sheet metal work at completion of installation. Remove grease and oil films, handling marks, contamination from steel wool, fittings and drilling debris, and scrub-clean. Free the exposed metal surfaces of dents, creases, waves, scratch marks, and solder or weld marks.

3.5 REPAIRS TO FINISH: Scratches, abrasions, and minor surface defects of finish may be repaired in accordance with the manufacturer's printed instructions and as approved. Repair damaged surfaces caused by scratches, blemishes, and variations of color and surface texture. Replace items which cannot be repaired.

3.6 FIELD QUALITY CONTROL: Establish and maintain a quality control procedure for sheet metal used in conjunction with roofing to assure compliance of the installed sheet metalwork with the contract requirements. Work not in compliance with the contract shall be promptly removed and replaced or corrected. Quality control shall include, but not be limited to, the following:

a. Observation of environmental conditions; number and skill level of sheet metal workers; condition of substrate.

b. Verification of compliance before, during, and after installation.

c. Inspection of sheet metalwork, for proper size and thickness, fastening and joining, and proper installation.

APENDIX A
SEE ATTACHED SHEET METAL WEIGHTS, THICKNESS AND GAGES TABLE

TABLE I

SHEET METAL WEIGHTS, THICKNESSES, AND GAGES

Sheet Metal Item	Copper	Aluminum	Zinc-Coated Steel (US Std Gage)	(Kg/m^2)	(mm)
Building Expansion Joints:					
Cover			0.04	.813	24
Waterstop-bellows or flanged, U-type:			0.04	-	-

Covering on minor flat, pitched or curved surfaces:	0.05	1.02	-
Flashings:			
Base	0.05	.813	24
Cap (Counter-flashing)	0.04	.813	26
Eave	0.04	-	24
Bond barrier	0.04	-	-
Stepped	0.04	.813	-
Valley	0.04	.813	-
Pipe vent sleeve:	Note (b)		
Coping:	0.04	-	-
Gravel Stops and Fascias:			
Extrusions	-	1.91	-
Sheets, corrugated	0.04	.813	-
Sheets, smooth	0.05	1.27	24
Edge Strip:	0.06	1.27	-
Joint Cover plates (See Table II)	0.04	.813	24
Splash pans	0.04	1.02	-

TABLE I (Cont)

SHEET METAL WEIGHTS, THICKNESSES, AND GAGES

Sheet Metal Item	Copper	Aluminum	Zinc-Coated Steel (US Std Gage)	(Kg/m^2)	(mm)
Downspout and Gutter:					
Downspouts and leaders:			-	.813	24
Downspout clips and anchors			-	1.02 clip 3.14 anchor	26
Downspout straps, (5 cm.)			-	1.52	26
Conductor heads			-	.813	24
Scupper lining			-	.813	26
Strainers, wire diameter or gage			-	3.66 dia.	28
Gutters:					
Gutter section			-	.813	24
Continuous cleat			-	.813	24
Hanger dimensions (mm)			25 x 2.03 (a)	25 x 3.17	

NOTES:

(a) May be polyvinyl chloride.

(b) 1.1 Kg minimum lead sleeve with 10 cm flange. Where lead sleeve is impractical, refer to paragraph titled "Single Pipe Vents" for optional material.

TABLE II
SHEET METAL JOINTS

Sheet Metal Item	Copper and Zinc Coated Steel	Aluminum	Remarks
Joint Cap For Building Expansion Joint At Roof:	3 cm single lock standing seam, cleated	3 cm single lock standing seam, cleated	
Flashings:			
Base flashing for expansion joint	2.5 cm flat locked, soldered, 7.5 cm 7.5 cm lap for joint	2.5 cm flat, locked, sealed, setting sealant for aluminum joints.	Aluminum producers recommended hard lap locked joint. Fill each metal expansion joint with a joint sealing compound. See Section 07920 titled "SEALANTS".
Eave	2.5 cm flat locked, cleated. 2.5 cm loose locked, sealed expansion joint, cleated	2.5 cm flat locked, cleated. 2.5 cm loose locked, sealed expansion joints, cleated	Same as base flashing
Stepped	7.5 cm lap	7.5 cm lap	
Valley	15.2 cm lap, cleated	15.2 cm lap, cleated	
Edge Strip	Butt	Butt	
Gravel Stops:			
Extrusions	----------	Butt with 1.25 CM space beneath and a	Use sheet flashing cover plate.
Sheet, smooth	Butt with 0.6 cm space	Butt with 0.6 cm space	Use sheet flashing backup plate.
Sheet, corrugated	Butt with 0.6 cm space	Butt with 0.6 cm space beneath and a	Use sheet flashing cover plate or a combination unit.
Gutters:	3.8 cm lap, riveted and soldered	2.5 cm flat locked, riveted, and sealed	Aluminum producers recommended hard setting sealant for locked aluminum joints.

(a) Elastomeric flashing shall have 7.5 cm lap with manufacturer's recommended sealant.

(b) Polyvinyl chloride reglet shall be sealed with manufacturer's recommended sealant.

***** END OF SECTION *****

SECTION 07 92 00

SEALANTS

PART I - GENERAL

1.1 REFERENCES: The publication listed below form a part of this specification to the extent referenced. The publication, if referenced in the text, is by basic designation only. The latest edition of the referenced publication shall govern.

1.1.1 AMERICAN SOCIETY FOR TESTING AND MATERIALS (ASTM):

C 920-79	Elastomeric Joint Sealants.

1.2 SUBMITTALS:

1.2.1 Certificates of conformance or compliance: Submit certificates from the manufactures attesting that materials meet the specified requirements.

1.2.2 Manufacturer's Descriptive Data: Submit complete descriptive data for each type of material. Clearly mark data to indicate the type the Contractor intends to provide. Data for sealants shall include application instructions, shelf life, mixing instructions for multi component sealants, and recommend cleaning solvents.

1.2.3 Samples: Submit two samples of each type of sealant.

1.2.4 Sample Joints: Before sealant work is started, provide a sample of each type of finished joint where directed. The sample shall show the workmanship, bond, and color of sealant. The workmanship, bond, and color of sealant of caulking work throughout the project shall match that of the approved sample joints.

1.3 ENVIRONMENTAL CONDITIONS: The ambient temperature shall be within the limits of 5 and 38 degrees C. when the sealant is applied.

1.4 DELIVERY AND STORAGE: Deliver materials to the job site in the manufacturers' shipping containers, unopened, with brand names, date of manufacture, color, and material designation clearly marked thereon. Containers of elastomeric sealant shall be labeled as to typed, class, grade, and use. Carefully handle and store all materials to prevent inclusion of foreign materials or subjection to sustained temperatures exceeding 38 degrees or less than 5 degrees C.

PART II - PRODUCTS

2.1 MATERIALS: All products shall conform to referenced publications and the requirements specified herein. Sealants shall be suitable for the type of substrate to which they will be applied.

2.1.1 Bituminous Mastic: Viscous paste asphalt-rubber based, suitable for cold application. Mastic shall have the following properties:

Color ..... Black
Density 1.65
Solid Contents 100%
Watertightness 100%
Thermic stability ..... -18 degrees C to + 100 degrees C
Adherence ..... Excellent to masonry, metal and concrete

2.1.2 Polyethylene Compressible Filler: Preformed type, cylindrical in shape made from polystyrene foam of closed cell by continuous extrusion. Filler shall have the following properties:

Color ..... Grey
Density ..... 0.025 - 0.035
Water absorption ..... None
Chemical stability ..... That of low density polystyrene
Thermic stability ..... -40 degrees C to + 60 degrees C

2.1.3 Silicone-Rubber Mastic: Viscous paste which vulcanizes in weather contact to a high elastic rubber of great adherence to masonry, metal and concrete. Mastic shall have the following properties:

Color ..... Grey
Watertightness 100%
Max. elongation 400%
Thermic stability ..... -54 degrees C to +95 degrees C
Hardness Shore A ..... 25 - 30

PART III - EXECUTION

3.1 SURFACE PREPARATION: Surfaces shall be clean, dry to the touch, free from moisture, grease, oil, paint, or other foreign matter that would tend to destroy or impair adhesion.

3.2 SEALANT PREPARATION: Do not modify the sealant by addition of liquids, solvents, or powders. Mix multi-component elastomeric sealants in accordance with manufacturer's printed instructions.

3.3 APPLICATION:

3.3.1 General: Provide sealants at all joints and where indicated on the drawings. Apply sealants and adhesive in accordance with the printed manufacturer's instructions.

3.3.2 Sealants: Provide a sealant compatible with the material(s) to which it is applied. Do not use a sealant that has exceeded shelf life or has jelled and can not be discharged in a continuous flow from the gun. Apply the sealant in accordance with the manufacturer's instructions with a gun having a nozzle that fits the joint width. Force sealant into joints to fill the joints solidly without air pockets. Tool sealant after application to ensure adhesion. Sealant shall be uniformly smooth and free of wrinkles. Upon completion of sealant application, roughen partially filled or unfilled joints, apply sealant, and tool smooth as specified.

3.4 PROTECTION AND CLEANING:

3.4.1 Protection: Protect areas adjacent to joints from sealant smears. Masking tape may be used for this purpose if removed 5 to 10 minutes after the joint is filled.

3.4.2 Final Cleaning: Upon completion of sealant application, remove remaining smears and stains and leave the work in a clean and neat condition.

a. Masonry and Other Porous Surfaces: Immediately scrape off fresh sealant that has been smeared on masonry and rub clean with a solvent as recommended by the sealant manufacturer. Allow excess sealant to cure for 24 hours, then remove by wire brushing or sanding.

b. Metal and Other Non-Porous Surfaces: Remove excess sealant with a solvent-moistened cloth.

***** END OF SECTION *****

TABLE OF CONTENTS

SECTION 09 90 00

PAINTS AND COATINGS

PART 1 GENERAL

1.1 REFERENCE
1.2 SUBMITALS
1.3 APLICATOR'S QUALIFICATIONS
1.3.1 Contractor Qualification
1.4 QUALITY ASSURANCE
1.4.1 Field Samples and Tests
1.4.1.1 Sampling Procedure
1.4.1.2 Testing Procedure
1.4.2 Textured Wall Coating System
1.4.3 Sample Textured Wall Coating System Mock-Up
1.5 REGULATORY REQUIREMENTS
1.5.1 Environmental Protection
1.5.2 Lead Content
1.5.3 Chromate Content
1.5.4 Asbestos Content
1.5.5 Mercury Content
1.5.6 Silica
1.5.7 Human Carcinogens
1.6 PACKING, LABELING AND STORAGE
1.7 SAFETY AND HEALTH
1.7.1 Safety Methods Used During Coating Application
1.7.2 Toxic Materials
1.8 ENVIRONMENTAL CONDITIONS
1.8.1 Coatings
1.8.2 Post - Application
1.9 SUSTAINABLE DESIGN REQUIREMENTS
1.10 SCHEDULING
1.11 COLOR SELECTION
1.12 LOCATION AND SURFACE TYPE TO BE PAINTED
1.12.1 Painting Included
1.12.1.1 Exterior Painting
1.12.1.2 Interior Painting
1.12.2 Painting Excluded
1.12.3 Mechanical and Electrical Painting
1.12.4 Definitions and Abbreviations
1.12.4.1 Qualification Testing
1.12.4.2 Batch Quality Conformance Testing
1.12.4.3 Coating

PART 2 PRODUCTS

2.1 MATERIALS
2.1.1 Material Compatibility
2.1.2 Material Quality
2.2 GENERAL

2.2.1 Condition in Containers
2.2.2 Color
2.2.3 Flexibility
2.2.4 Skinning
2.2.5 Odor
2.2.6 Working Consistency
2.2.7 Appearance of Painted Surfaces
2.2.8 Maintenance
2.3 PRODUCT TYPES

PART 3 EXECUTION

3.1 PROTECTION OF AREAS AND SPACES NOT TO BE PAINTED
3.2 RESEALINHG OF EXISTING EXTERIOR JOINTS
3.2.1 Surface Condition
3.2.2 Backstops
3.2.3 Primer and Bond Breaker
3.2.4 Ambient Temperature
3.2.5 Exterior Sealant
3.2.6 Cleaning
3.3 SURFACE PREPARATION
3.3.1 Additional Requirements for Preparation of Surfaces With Existing Coatings
3.3.2 Existing Coated Surfaces with Minor Defects
3.3.3 Removal of Existing Coatings
3.3.4 Substrate Repair
3.4 PREPARATION OF METAL SURFACES
3.4.1 Cleaning Standard Definitions
3.4.2 Visual Preparation Grades
3.4.3 Existing and New Ferrous Surfaces.
3.4.4 Final Ferrous Surface Condition
3.4.5 Galvanized Surfaces
3.4.6 Non – Ferrous Metallic Surfaces
3.4.7 Terne – Coated Metal Surfaces
3.4.8 Existing Surfaces with Bituminous or Mastic – Type Coating
3.5 PREPARATION OF CONCRETE AND CEMENTITIOUS
3.5.1 Concrete and Masonry
3.5.2 Gypsum board, Plaster and Stucco
3.6 PREPARATION OF WOOD AND PLYWOOD SURFACES
3.6.1 New existing uncoated, existing coated Plywood and Wood Surfaces, Except Floors
3.6.2 Interior Wood Surfaces, Stain Finish
3.6.3 Water Blasting of Existing Coated Wood Surfaces
3.7 APLICATION
3.7.1 Coating Application
3.7.2 Mixing and Thinning of Paints
3.7.3 Two-Component Systems
3.7.4 Coating Systems
3.8 COATING SYSTEMS FOR METAL
3.9 COATING SYSTEMS FOR CONCRETE AND CEMENTITIOUS SUBSTRATES
3.10 COATING SYSTEMS FOR WOOD AND PLYWOOD
3.11 PIPING IDENTIFICATION
3.12 INSPECTION AND ACCEPTANCE
3.13 WASTE MANAGEMENT
3.14 PAINT TABLES
3.14.1 EXTERIOR PAINT TABLES
3.14.2 INTERIOR PAINT TABLES

-End of Section Table of Contents-

SECTION 09 90 00

PAINTS AND COATINGS

08/10

PART 1 GENERAL

1.1 REFERENCES

The publications listed below form a part of this specification to the extent referenced. The publications are referred to within the text by the basic designation only.

ASME INTERNATIONAL (ASME)

ASME A13.1	(2007) Scheme for the Identification of Piping Systems

ASTM INTERNATIONAL (ASTM)

ASTM C 920	Standard Specification for Elastomeric Joint Sealants

INSTITUTO NACIONAL DE SEGURIDAD E HIGIENE EN EL TRABAJO (INSHT)

NTP 371	Information on dangerous products: Chemical safety data sheets

THE SOCIETY FOR PROTECTIVE COATINGS (SSPC)

SSPC SP 1 to 12	Surface Preparation Systems.

U.S. ARMY CORPS OF ENGINEERS (USACE)

EM 385-1-1	Safety and Health Requirements Manual.

U.S. DEPARTMENT OF DEFENSE (DOD)

MIL-STD-101	(Rev B) Color Code for Pipelines & for Compressed Gas Cylinders

U.S. GENERAL SERVICES ADMINISTRATION (GSA)

FED-STD-595	(Rev B; Am 1) Colors Used in Government Procurement

1.2 SUBMITTALS

Government approval is required for submittals with a "G" designation; submittals not having a "G" designation are for Contractor Quality Control approval. The following shall be submitted in accordance with Section 01 33 00 entitled “Submittal Procedures”

Samples of specified materials may be taken and tested for compliance with specification requirements.

The current UNE and regulations of the date of contract award will be used to determine compliance with the submittal requirements of this specification. The Contractor may choose to use a subsequent UNE "Approved Product", however, only one list may be used for the entire contract and each coating system is to be from a single manufacturer. All coats on a particular substrate must be from a single manufacturer. No variation from the UNE

Approved Products is acceptable.

SD-03 Product Data

Coating; G

1) Manufacturer’s name, address, and distance between manufacturing facility and the project site.

2) Product name and catalog product number.

3) Product Chemical composition.

4) Type of waste generated, quantity and volume of products included in project.

5) Indicate VOC content; remark this item if the compound has an initial boiling point less than or equal to 250 °C measured at a standard atmospheric pressure of 101.3 kPa and can do damage to visual or audible senses.

6) For each paint type, include block fillers, primers and sealers data.

Block Fillers, primers and sealers; G

1) Manufacturer’s name, address, and distance between manufacturing facility and the project site.

2) Product name and catalog product number.

3) Product Chemical composition.

4) Type of waste generated, quantity and volume of products included in project.

5) Indicate VOC content; remark this item if the compound has an initial boiling point less than or equal to 250 °C measured at a standard atmospheric pressure of 101.3 kPa and can do damage to visual or audible senses.

SD-04 Samples

Color; G

Textured Wall Coating System; G

Sample Textured Wall Coating System Mock-Up; G

Submit manufacturer's samples of paint colors and texture. Cross reference color and texture samples to color and texture scheme as indicated.

SD-07 Certificates

Applicator's qualifications; G

Qualification Testing laboratory for coatings; G

SD-08 Manufacturer's Instructions

Application instructions; G

Mixing; G

Detailed mixing instructions, minimum and maximum application temperature and humidity, pot-life, and curing and drying times between coats.

Manufacturer's Material Safety Data Sheets; G

Submit manufacturer's Material Safety Data Sheets for coatings, solvents, and other potentially hazardous materials according to NTP 371.

SD-10 Operation and Maintenance Data

Coatings; G

Preprinted cleaning and maintenance instructions for all coating systems shall be provided.

1.3 APPLICATOR'S QUALIFICATIONS

1.3.1 Contractor Qualification

Submit the name, address, telephone number, FAX number, and e-mail address of the contractor that will be performing all surface preparation and coating application. Submit evidence that key personnel have successfully performed surface preparation and application of coatings on a minimum of three similar projects within the past three years. List information by individual and include the following:

a. Name of individual and proposed position for this work.

b. Information about each previous assignment including:

Position or responsibility

Employer (if other than the Contractor)

Name of facility owner

Mailing address, telephone number, and telex number (if non-US) of facility owner

Name of individual in facility owner's organization who can be contacted as a reference

Location, size and description of structure

Dates work was carried out

Description of work carried out on structure

1.4 QUALITY ASSURANCE

1.4.1 Field Samples and Tests

The Contracting Officer may choose up to two coatings that have been delivered to the site to be tested at no cost to the Government. Take samples of each chosen product as specified in the paragraph "Sampling Procedures." Test each chosen product as specified in the paragraph "Testing Procedure." Products which do not conform,

shall be removed from the job site and replaced with new products that conform to the referenced specification. Testing of replacement products that failed initial testing shall be at no cost to the Government.

Another test that the Contracting Officer may choose is one or two Batch Quality Conformance Testing to prove conformance of the manufacturer's paint to the specified UNE standard with no cost to the Government. This testing is accomplished before the materials are delivered to the job site. Test paint products as specified in the paragraph "Testing Procedure".

1.4.1.1 Sampling Procedure

The Contracting Officer will select paint at random from the products that have been delivered to the job site for sample testing. The Contractor shall provide one liter (one quart) samples of the selected paint materials. The samples shall be taken in the presence of the Contracting Officer, and labeled, identifying each sample. Provide labels in accordance with the paragraph "Packaging, Labeling, and Storage" of this specification.

1.4.1.2 Testing Procedure

Provide Batch Quality Conformance Testing for specified products, as defined by and performed by UNE standards. As an alternative to Batch Quality Conformance Testing, the Contractor may provide Qualification Testing for specified products above to the appropriate UNE product specification, using the third-party laboratory approved under the paragraph "Qualification Testing" laboratory for coatings. The qualification testing lab report shall include the backup data and summary of the test results. The summary shall list all of the reference specification requirements and the result of each test. The summary shall clearly indicate whether the tested paint meets each test requirement. Note that Qualification Testing may take 4 to 6 weeks to perform, due to the extent of testing required.

Submit name, address, telephone number, FAX number, and e-mail address of the independent third party laboratory selected to perform testing of coating samples for compliance with specification requirements. Submit documentation that laboratory is regularly engaged in testing of paint samples for conformance with specifications, and that employees performing testing are qualified. If the Contractor chooses AENOR to perform the Batch Quality Conformance testing, the above submittal information is not required, only a letter is required from the Contractor stating that AENOR will perform the testing.

1.4.2 Textured Wall Coating System

Three complete samples of each indicated type, pattern, and color of textured wall coating system applied to a panel of the same material as that on which the coating system will be applied in the work. Samples of wall coating systems shall be minimum 125 x 175 mm (5 x 7 inches) and of sufficient size to show pattern repeat and texture.

1.4.3 Sample Textured Wall Coating System Mock-Up

After coating samples are approved, and prior to starting installation, a minimum 2430 mm x 2430 mm (8 foot x 8 foot) mock-up shall be provided for each substrate and for each color and type of textured wall coating, using the actual substrate materials. Once approved the mock-up samples shall be used as a standard of workmanship for installation within the facility. At least 48 hours prior to mock-up installation, the Contractor shall submit written notification to the Contracting Officer's Representative.

1.5 REGULATORY REQUIREMENTS

1.5.1 Environmental Protection

In addition to requirements specified elsewhere for environmental protection, provide coating materials that conform to the restrictions of the local Air Pollution Control District and regional jurisdiction. Notify Contracting Officer of any paint specified herein which fails to conform.

1.5.2 Lead Content

Do not use coatings having a lead content over 0.06 percent by weight of nonvolatile content.

1.5.3 Chromate Content

Do not use coatings containing zinc-chromate or strontium-chromate.

1.5.4 Asbestos Content

Materials shall not contain asbestos.

1.5.5 Mercury Content

Materials shall not contain mercury or mercury compounds.

1.5.6 Silica

Abrasive blast media shall not contain free crystilline silica.

1.5.7 Human Carcinogens

Materials shall not contain confirmed human carcinogens or suspected human carcinogens.

1.6 PACKAGING, LABELING, AND STORAGE

Paints shall be in sealed containers that legibly show the contract specification number, designation name, formula or specification number, batch number, color, quantity, date of manufacture, manufacturer's formulation number, manufacturer's directions including any warnings and special precautions, and name and address of manufacturer. Pigmented paints shall be furnished in containers not larger than 20 liters(5 gallons). Paints and thinners shall be stored in accordance with the manufacturer's written directions, and as a minimum, stored off the ground, under cover, with sufficient ventilation to prevent the buildup of flammable vapors, and at temperatures between 4 to 35 degrees C(40 to 95 degrees F). Do not store paint, polyurethane, varnish, or wood stain products with materials that have a high capacity to adsorb VOC emissions. Do not store paint, polyurethane, varnish, or wood stain products in occupied spaces.

1.7 SAFETY AND HEALTH

Apply coating materials using safety methods and equipment in accordance with the following:

Work shall comply with applicable Federal, State, and local laws and regulations, and with the ACCIDENT PREVENTION PLAN, including the Activity Hazard Analysis and in Appendix A of EM 385-1-1. The Activity Hazard Analysis shall include analyses of the potential impact of painting operations on painting personnel and on others involved in and adjacent to the work zone.

The Works shall be evaluated, considering the products as a chemical potential risk.

1.7.1 Safety Methods Used During Coating Application

Comply with the requirements of Federal, State, Local laws and regulations

1.7.2 Toxic Materials

To protect personnel from overexposure to toxic materials, conform to the most stringent guidance of:

a. The applicable manufacturer's Material Safety Data Sheets (MSDS) or local regulation.

b. Use impermeable gloves, chemical goggles or equipment to avoid exposure to skin, eyes and respiratoty system. Conduct work in a manner to minimize exposure of building occupants and general public.

c. Values for chemical substances, physical agents and biological exposure shall not higher than the threshold limits.

d. Removal, disposal and paint existing coatings which contain lead is prohibited, contractor shall inform immediately.

1.8 ENVIRONMENTAL CONDITIONS

Comply, at minimum, with manufacturer recommendations for space ventilation during and after installation. Isolate area of application from rest of building when applying high-emission paints or coatings.

1.8.1 Coatings

Do not apply coating when air or substrate conditions are:

a. Less than 3 degrees C(5 degrees F) above dew point;

b. Below 10 degrees C(50 degrees F) or over 35 degrees C(95 degrees F), unless specifically pre-approved by the Contracting Officer and the product manufacturer. Under no circumstances shall application conditions exceed manufacturer recommendations.

1.8.2 Post-Application

Vacate space for as long as possible after application. Wait a minimum of 48 hours before occupying freshly painted rooms. Maintain one of the following ventilation conditions during the curing period, or for 72 hours after application:

a. Supply 100 percent outside air 24 hours a day.

b. Supply airflow at a rate of 6 air changes per hour, when outside temperatures are between (55 degrees F)13 degrees C and (85 degrees F)29 degrees C and humidity is between 30 percent and 60 percent.

c. Supply airflow at a rate of 1.5 air changes per hour, when outside air conditions are not within the range stipulated above.

1.9 SUSTAINABLE DESIGN REQUIREMENTS

Using local materials can help minimize transportation impacts, including fossil fuel consumption, air pollution, and labor. Using materials harvested and manufactured within a 500 mile radius from the project site contributes to the environmental protection.

1.10 SCHEDULING

Allow paint, polyurethane, varnish, and wood stain installations to cure prior to the installation of materials that adsorb VOCs, including carpets, textiles, unprimed gypsum wallboard, and acoustical ceiling panels.

1.11 COLOR SELECTION

Colors of finish coats shall be as indicated or specified. Where not indicated or specified, colors shall be selected by the Contracting Officer, or FED-STD-595, if a repair of a wall is made the color shall match to the existing. Manufacturers' names and color identification are used for the purpose of color identification only. Named products are acceptable for use only if they conform to specified requirements. Products of other manufacturers are acceptable if the colors approximate colors indicated and the product conforms to specified requirements.

Tint each coat progressively darker to enable confirmation of the number of coats.

1.12 LOCATION AND SURFACE TYPE TO BE PAINTED

1.12.1 Painting Included

Where a space or surface is indicated to be painted, include the following unless indicated otherwise.

a. Surfaces behind portable objects and surface mounted articles readily detachable by removal of fasteners, such as screws and bolts.

b. New factory finished surfaces that require identification or color coding and factory finished surfaces that are damaged during performance of the work.

c. Existing coated surfaces that are damaged during performance of the work.

1.12.1.1 Exterior Painting

Include new surfaces, existing coated surfaces and existing uncoated surfaces; of the buildings as require the Contracting Officer. Also included are existing coated surfaces made bare by cleaning operations.

1.12.1.2 Interior Painting

Include new surfaces, existing uncoated surfaces and existing coated surfaces of the building as require the Contracting Officer. Where a space or surface is indicated to be painted, include the following items, unless indicated otherwise.

a. Exposed columns, girders, beams, joists, and metal deck; and

b. Other contiguous surfaces, as doors frames, windows tiles.

1.12.2 Painting Excluded

Do not paint the following unless indicated otherwise.

a. Surfaces concealed and made inaccessible by panelboards, fixed ductwork, machinery, and equipment fixed in place.

b. Surfaces in concealed spaces. Concealed spaces are defined as enclosed spaces above suspended ceilings, furred spaces, attic spaces, crawl spaces, elevator shafts and chases.

c. Steel to be embedded in concrete.

d. Copper, stainless steel, aluminum, brass, and lead.

e. Hardware, fittings, and other factory finished items.

1.12.3 Mechanical and Electrical Painting

Include field coating of interior and exterior new and existing surfaces.

a. Where a space or surface is indicated to be painted, include the following items unless indicated otherwise.

(1) Exposed piping, conduit, and ductwork;

(2) Supports, hangers, air grilles, and registers;

(3) Miscellaneous metalwork and insulation coverings.

b. Do not paint the following, unless indicated otherwise:

(1) New zinc-coated, aluminum, and copper surfaces under insulation;

(2) New aluminum jacket on piping;

(3) New interior ferrous piping under insulation.

1.12.3.1 Fire Extinguishing Sprinkler Systems

Clean, pretreat, prime, and paint new fire extinguishing sprinkler systems including valves, piping, conduit, hangers, supports, miscellaneous metalwork, and accessories. Apply coatings to clean, dry surfaces, using clean brushes. Clean the surfaces to remove dust, dirt, rust, and loose mill scale. Immediately after cleaning, provide the metal surfaces with one coat primer per schedules. Shield sprinkler heads with protective covering while painting is in progress. Upon completion of painting, remove protective covering from sprinkler heads. Remove sprinkler heads which have been painted and replace with new sprinkler heads. Provide primed surfaces with the following:

a. Piping in Unfinished Areas: Provide primed surfaces with one coat of red alkyd gloss enamel applied to a minimum dry film thickness of 0.025 mm(1.0 mil) in attic spaces, spaces above suspended ceilings, crawl spaces, pipe chases, mechanical equipment room, and spaces where walls or ceiling are not painted or not constructed of a prefinished material. In lieu of red enamel finish coat, provide piping with 50 mm(2 inch) wide red enamel bands or self-adhering red plastic bands spaced at maximum of 6 meters(20 foot) intervals.

b. Piping in Finished Areas: Provide primed surfaces with two coats of paint to match adjacent surfaces, except provide valves and operating accessories with one coat of red alkyd gloss enamel applied to a minimum dry film thickness of 0.025 mm(1.0 mil). Provide piping with 50 mm(2 inch) wide red enamel bands or self-adhering red plastic bands spaced at maximum of 6 meters(20 foot) intervals throughout the piping systems.

1.12.4 Definitions an Abbreviations

1.12.4.1 Qualification Testing

Qualification testing is the performance of all test requirements listed in the product specification. This testing is accomplished by UNE to qualify each product, and may also be accomplished by Contractor's third party testing lab if an alternative to Batch Quality Conformance Testing by Aenor is desired.

1.12.4.2 Batch Quality Conformance Testing

Batch quality conformance testing determines that the product provided is the same as the product qualified to the appropriate product specification. This testing shall only be accomplished by Aenor.

1.12.4.3 Coating

A film or thin layer applied to a base material called a substrate. A coating may be a metal, alloy, paint, or solid/liquid suspensions on various substrates (metals, plastics, wood, paper, leather, cloth, etc.). They may be applied by electrolysis, vapor deposition, vacuum, or mechanical means such as brushing, spraying, calendaring, and roller coating. A coating may be applied for aesthetic or protective purposes or both. The term "coating" as used herein includes emulsions, enamels, stains, varnishes, sealers, epoxies, and other coatings, whether used as primer, intermediate, or finish coat. The terms paint and coating are used interchangeably.

PART 2 PRODUCTS

2.1 MATERIALS

Conform to the coating specifications and standards referenced in PART 3. Submit manufacturer's technical data sheets for specified coatings and solvents. Comply with applicable regulations regarding toxic and hazardous materials. Paints shall be factory-manufactured and delivered to the job in unbroken containers which shall show the designated name, formula, color, manufacturer’s directions, and name of the manufacturer, all of which shall be plainly legible at the time of use. Pigmented paints shall be furnished in containers not larger than 20 kilograms. All paints shall be products that have a minimum of 2 years

2.1.1 Material Compatibility

Provide block fillers, primers, undercoats and finish-coat materials that are compatible with one another and the substrates indicated under conditions of service and application, as demonstrated by manufacturer based on testing and field experience.

2.1.2 Material Quality

Provide manufacturer’s best-quality paint material of the various coating types specified. Paint material containers not displaying manufacturer’s product identification will not be acceptable, only first brands with knowledge quality and more than five years in the market will be acceptable.

2.2 GENERAL

Determination of non-volatile paint and varnish compounds shall be in accordance with the regulations.

2.2.1 Condition in Containers

The products shall be thoroughly mixed and ground. It shall not be settled, caked or thickened to such a degree that it cannot be mixed easily with a paddle by stirring to a good uniform brushing consistency.

2.2.2 Color

The color of the paint shall match with the existing one of the surface however another color should be approved by the Contracting Officer but shall match the sample that could be required. When the sample is going to be performed the Contracting Officer must be notified in advance.

2.2.3 Flexibility

Paint shall show no evidence of cracking, chipping or flaking.

2.2.4 Skinning

Paint shall not skin (form a thin membrane surface at the top of the liquid) within 48 hours after having been placed in a filled closed container.

2.2.5 Odor

The odor of the wet paint at any interval shall not be obnoxious or objectionable.

2.2.6 Working Consistency

Paint shall show easy brushing, good flowing and spreading, and good leveling properties. These properties will be demonstrated on test specimens at the request of the Contracting Officer. Coats that have any noticeable pull under a large brush and that show poor or fair spreading and flowing properties will not be acceptable.

2.2.7 Appearance of Painted Surfaces

Paint shall dry to a uniform, smooth, flat (gloss or semi-gloss, is so indicated in the finish schedule) appearance under ordinary conditions of illumination and wearing. There shall be no laps, skips, highlighted spots or brush marks. Tinted paint shall dry to a uniform color.

2.2.8 Maintenance

Preprinted cleaning and maintenance instructions for all coating systems shall be provided.

2.3 PRODUCT TYPES

The products to use must be as similar as possible to MPI standards each product must be approved by the Contracting Officer before application at job site.

MPI 1. Aluminum Paint. An aliphatic solvent based coating made from a varnish or alkyd binder combined with aluminum pigment. Used for interior and exterior applications to wood, metals, bituminous coated surfaces and occasionally, prepared masonry surfaces as a stain-blocking coating and sealer. Paint systems using this coating will be specified for new and repainting work in residential, commercial and light industrial applications, primarily in areas of low contact and abrasion. Application methods include: brushes, rollers, and/or airless, HVLP or conventional spray equipment. Must be re-coatable with conventional alkyd and latex paints.

MPI 4. Interior/Exterior Latex Block Filler. A water based, high solids, emulsion type pigmented coating with bridging and filling properties for interior or exterior concrete masonry units, for the purpose of filling the surface for subsequent applications of paint. Application by brush, roller or airless spray. Rolling or backrolling must be done to ensure proper filling of voids

MPI 5. Exterior Alkyd/Oil Wood Primer. An alkyd/oil based primer for exterior wood siding and trim. This product is used for new and repainting work in residential, commercial and light industrial areas. This primer is used on woods prone to extractive bleeding, such as cedar and redwood, and must have bleeding resistance when applied to dry (less than 15% moisture content) wood substrates. Finish coatings, used over this primer include latex, alkyd and alkyd/oil based paints. The straight alkyd products are faster drying than the oil/alkyd type primer. Must be mildew resistant. Application methods will include using brushes, rollers, and airless and conventional spray equipment.

MPI 6. Exterior Latex Wood Primer. A pigmented, white, water borne emulsion type wood primer for exterior wood surfaces. This primer is intended for use in coating systems using both latex and alkyd based finishing paints. Paint systems using this primer will be specified for new and repainting work in residential, commercial and light industrial applications. Application methods will include using brushes, rollers, and airless and conventional spray equipment. This primer is recommended for use on woods containing extractable staining materials such as cedar and redwood.

MPI 8. Exterior Alkyd, Flat, MPI Gloss Level I. A solvent based, mildew resistant, low sheen, alkyd for exterior wood siding and fencing and primed metals. Systems using MPI #8 will be for new and repainting in residential, commercial and light industrial applications. Not generally recommended for trim, doors or windows as there could be marking and burnishing from contact and abrasion. Must be compatible with MPI #5 Alkyd, MPI #6 Exterior Latex and MPI #7 Oil/Alkyd primers for bare wood applications. For ferrous metals, MPI #23 Surface Tolerant Primer, MPI #79 Marine Alkyd and MPI # 76 and # 95 Quick Drying primers. For galvanized and other metals, this coating will used over MPI #26 Cementitous Galvanized and MPI #80 Vinyl Wash Primers. Application uses brushes, rollers, and airless and conventional spray.

MPI 9. Exterior Alkyd, Gloss, MPI Gloss Level 6. A white, or colored, gloss, alkyd based paint intended for use on new and previously painted primed exterior wood and metal surfaces, primarily residential and commercial trim, doors and frames. Application by brush, roller and air or airless spray.

MPI 10. Exterior Latex, Flat, MPI Gloss Level 1. A white or colored, flat, water based paint intended for use on new and previously painted exterior wall surfaces, including stucco, concrete, or primed wood. This product is not intended for application to un-primed wood surfaces. Surfaces prone to extractive bleeding (i.e. cedar/redwood) must have a stain blocking primer applied (MPI #5, MPI #6, or MPI #7). This product is alkali resistant for use on masonry surfaces and mildew resistant. Other primers used with this coating include MPI #3, for alkaline surfaces, #4 for concrete block, self-priming on stucco and concrete. Not recommended for horizontal surfaces, where water may pond or stand.

MPI 11. Exterior Latex, Semi-Gloss, MPI Gloss Level 5. A pigmented, water based, emulsion type, semi-gloss paint for exterior masonry, stucco, primed metals and wood, (primarily trim, fascia and smooth surfaces e.g. doors and door frames) where low to moderate contact can be anticipated. Alkali resistant for use on masonry surfaces and mildew resistant. Primers used with this coating include MPI #3, for alkaline surfaces, #4 for concrete block, self-priming on stucco and concrete, and #5, #6 and #7 for wood surfaces. Not recommended for horizontal surfaces, where water may pond or stand. Application methods will include using brushes, rollers, and airless and conventional spray equipment.

MPI 13. Exterior Solvent-Based Semi-Transparent Stain. A solvent based, oil (or oil/alkyd), semi-transparent, pigmented stain for new vertical wood surfaces on residential and commercial buildings e.g. exterior wood siding. Application by brush, roller and air or airless spray. Application can also be by commercial machine i.e. ‘factory staining’.

MPI 16. Stain, Exterior, Water Based, Solid Hide. A water based, solid hide, emulsion type, pigmented stain for primed or previously painted exterior vertical wood surfaces. Not intended over unsealed woods that may be prone to extractive bleeding, e.g. Cedar or redwood. Application by brush, roller and

MPI 23. Surface Tolerant Metal Primer. A solvent based, anti-corrosive metal primer for use on structural steel and misc. metal fabrications in residential and commercial applications, as well as light to moderate industrial applications. Most often specified for field application or repainting. Products conforming to this specification will provide good corrosion resistance on poorly prepared metal surfaces which may only receive a minimum of solvent degreasing (SSPC — SP1) followed by hand or tool power cleaning (SSPC SP2 or 3). Will be top coated with conventional alkyd (MPI #8, #9 for exterior, MPI #47, #48, #49, #51for interior), for interior surfaces MPI # 151,153 or 154 W.B. Light Industrial Coating (formerly MPI #110) or for exterior surfaces MPI #161,163,164 W.B. Light Industrial Coating (formerly MPI #110), dry fall (MPI #55, #118), multi color (MPI #112) and aluminum (MPI #1). Application is by brush, roller, and airless or conventional spray.

MPI 26. Cementitious Galvanized Metal Primer. A solvent based primer composed of linseed oil/alkyd resin and Portland cement for cleaned galvanized metal prior to finish coating. Use areas include residential, commercial and light to moderate industrial buildings in both new and repainting applications. Will be top coated with conventional latex (MPI #10, #11, #119, for exterior, MPI #52, #53, #54, #114 for interior), alkyd (MPI #8, #9, for exterior, MPI #47, #48, #49, #51, for interior), high performance latex (MPI #138, #139, #140, and #141), dry fall (MPI #55, #133), for interior surfaces MPI # 151,153 or 154 W.B. Light Industrial Coating (formerly MPI #110) or for exterior surfaces MPI #161,163,164 W.B. Light Industrial Coating (formerly MPI #110) and aluminum (MPI #1).

MPI 31. Polyurethane, Moisture Cured, Clear Gloss. A solvent based, moisture curing polyurethane clear-coating with a gloss finish for interior brick, block, concrete, plaster, wood and metal surfaces, where chemical and solvent resistance is required. Systems using this coating will be specified for new and repainting work in residential, commercial and industrial applications in areas of high contact and abrasion. Application methods include brushes, rollers, and/or airless or conventional spray equipment

MPI 39. Interior Latex-Based Wood Primer. A latex based primer for use on interior surfaces such as doors, casings, and trim where odor or VOC concerns may not permit the use of solvent based products. Primers complying with this standard must contain "tannin blocking" materials, which effectively prevent staining on woods such as cedar and redwood. Application methods include using brushes, rollers, and airless and conventional spray.

MPI 44. Interior Latex, MPI Gloss Level 2. Note: Requires a properly-prepared Level 4 drywall finish (i.e. assuming no critical lighting conditions). See "Standard Specification for Application and Finishing of Gypsum Board – ASTM C 840". A white, or colored, water based latex-based paint with a low sheen finish. Used on primed/sealed interior plaster and gypsum board, and on primed wood and metals.

MPI 45. Interior Alkyd Primer Sealer. A solvent based, alkyd type, pigmented primer/sealer for new interior wood, plaster and porous surfaces, and also for areas previously painted with flat paints. This product is used for new and repainting work in residential and commercial buildings. Topcoats specified with this sealer include conventional alkyd and latex paints. Application methods include brushes, rollers, and airless and conventional spray equipment.

MPI 46. Interior Enamel Undercoat. A solvent based, pigmented coating for interior smooth wood and previously painted plaster or gypsum wallboard surfaces to be subsequently coated with latex or alkyd finish coat(s). Has low porosity (i.e. High hold-out) and good sanding properties for semi-gloss and gloss enamel finishes.

MPI 47. Interior Alkyd, Semi-Gloss, MPI Gloss Level 5. Note: Requires a properly-prepared Level 5 drywall finish. See "Standard Specification for Application and Finishing of Gypsum Board – ASTM C 840". A white, or colored, solvent based, semi-gloss alkyd paint for primed/sealed interior plaster, gypsum wallboard, wood and metal doors, and trim.

MPI 48. Interior Alkyd, Gloss, MPI Gloss Level 6. A solvent based, gloss alkyd paint for primed new, or previously sealed, interior wood and metal surfaces. Primarily used on trim, doors and frames.

MPI 49. Interior Alkyd, Flat, MPI Gloss Level 1. Note: Requires a properly-prepared Level 4 drywall finish (i.e. assuming no critical lighting conditions). See "Standard Specification for Application and Finishing of Gypsum Board – ASTM C 840". A white, or colored, solvent based, flat, alkyd paint for new primed and previously painted interior wood and metal surfaces. Primarily used on low abrasion wall and ceiling surfaces.

MPI 50. Interior Latex Primer Sealer. A white, pigmented, water based latex sealer used on new interior plaster, concrete and gypsum wallboard surfaces that are subsequently painted with latex or alkyd finish coat(s). Its purpose is to reduce the porosity of the substrate for finish coats. Not intended for use on wood or previously painted surfaces.

MPI 51. Interior Alkyd, Eggshell, MPI Gloss Level 2. Note: Requires a properly-prepared Level 5 drywall finish. See "Standard Specification for Application and Finishing of Gypsum Board – ASTM C 840". A white, or colored, solvent based, alkyd paint with a low sheen finish between flat and semi-gloss. Used on primed/sealed interior plaster, gypsum, wood, and metal walls primarily in residential and moderate traffic commercial environments

MPI 52. Interior Latex, MPI Gloss Level 3. Note: Requires a properly-prepared Level 5 drywall finish. See "Standard Specification for Application and Finishing of Gypsum Board – ASTM C 840". A white, or colored, water based latex-based paint with a finish between a high side sheen flat and a 'satin-like' finish or a low semi-gloss. (The gloss and sheen levels should be similar to an alkyd eggshell — MPI #51.) Used on primed/sealed interior plaster and gypsum board, and on primed wood and metals.

MPI 54. Interior Latex, Semi-Gloss, MPI Gloss Level 5. Note: Requires a properly-prepared Level 5 drywall finish. See "Standard Specification for Application and Finishing of Gypsum Board – ASTM C 840". A white, or colored, water based latex-based paint with a semi-gloss finish. Used on primed/sealed interior wood and metal trim and doors, and on plaster and gypsum wallboard (particularly kitchens and bathrooms) where washability is required.

MPI 56. Interior Oil Modified Urethane Clear Gloss. A solvent based, one component, oil modified polyurethane clear 'gloss' varnish for new or previously varnished or stained, interior wood surfaces in residential and commercial buildings. Uses include floors, cabinetry, moldings, doors and trim. These products are intended as "self-sealing" materials on new wood surfaces or bare areas in repainting. Not recommended for use over sealers containing stearates. Application methods include brushes, rollers, and airless, HVLP and conventional spray equipment.

MPI 57. Interior Oil Modified Urethane Clear Satin. A solvent based, one component, oil modified polyurethane clear 'satin' varnish for new or previously varnished or stained, interior wood surfaces in residential and commercial buildings. Uses include cabinetry, moldings, doors and trim. Not recommended for floors due to potential marking and marring. These products are intended as "self-sealing" materials on new wood surfaces or bare areas in repainting. Not recommended for use over sealers containing stearates. Application methods include brushes, rollers, and airless, HVLP and conventional spray equipment.

MPI 71. Polyurethane, Moisture Cured, Clear, Flat. A solvent based, moisture curing, polyurethane clear coating with a flat finish for interior brick, block, concrete, plaster, wood and metal surfaces, where chemical and solvent resistance is required. Can be applied by brush, roller and spray. Not generally recommended for floor surfaces as marring may occur.

MPI 72. Polyurethane, Two Component, Pigmented, Gloss. A solvent based, two component polyurethane, pigmented coating with a gloss finish for interior or exterior brick, block, concrete, plaster, wood and metal surfaces, where abrasion, weathering, chemical and solvent resistance is required. Primarily applied by spray, but can be applied by brush or roller in small areas.

MPI 77. Epoxy Gloss. A solvent based, gloss, two components, epoxy coating specified for wall and floor surfaces in moderate to heavy traffic commercial and moderate industrial environments. Must be resistant to incidental splash and spillage of dilute (5%) sulfuric acid, (15%) hydrochloric acid, (20%) sodium hydroxide, gasoline and heavy duty cleaners and detergents. Used as a self-priming material on smooth, low porosity concrete, masonry and wood surfaces. On concrete masonry units (blocks) MPI #4 Latex (dry areas) or #116 Epoxy (damp areas) block fillers are used as the first coat. On ferrous and galvanized metals, a primer such as MPI #20 Epoxy Zinc Rich, #101 Epoxy Anti-Corrosive and #19 Inorganic Zinc rich primers. On non-ferrous metals MPI #80 Etch Type Primer is specified. This epoxy shall be able to be applied at temperatures ranging from 15° to 40° C and a maximum relative humidity of 80%. Application is generally by spray, but in areas where spray is impractical, a brush or roller may be used.

MPI 79. Alkyd Anti-Corrosive Metal Primer. A solvent based, alkyd type, anti-corrosive primer for ferrous metals in industrial or light marine exposures. This coating is primarily used for field application on new and repainting work. Minimum preparation for new work is an SSPC SP 6 commercial blast, but in many situations, hand or power tool cleaning to SSPC SP11 may be used. Application is by brush, roller or spray, and can be re-coated with conventional latex and alkyd enamels.

MPI 90. Interior Wood Stain, Semi-Transparent. A solvent based, oil or oil/alkyd, semi transparent, pigmented stain for new interior hard and softwood trims, doors, paneling, glue laminated beams and dimension lumber that are to be finished with a clear varnish. Used in residential, commercial and public locations. Can be top coated with MPI #73, #74, #75 alkyd, MPI #56, #57 oil modified polyurethane varnishes, MPI #84, #85, #86, #87 lacquers or as a finish itself. Must also be compatible with MPI #91 Wood Filler and #102 Alkyd Sanding Sealer

MPI 94. Exterior Alkyd, Semi-Gloss, MPI Gloss Level 5. A solvent based, alkyd type, semi-gloss enamel for general use on exterior primed woods and metals. Paint systems using this coating will be specified for new and repainting work in residential, commercial and light industrial applications. Recommended for trim, doors or windows and frames. Must be compatible with MPI #5 Alkyd, MPI #6 Latex, and MPI #7 Oil/Alkyd primers for bare wood applications. For ferrous metals, MPI #23 Surface Tolerant, MPI #79 Marine Alkyd and MPI #95 Quick Drying primers. For galvanized and other metals, this coating will be used over MPI #26 Cementitous Galvanized and MPI #80 Vinyl Wash Primers. It must be mildew resistant. Application methods will include using brushes, rollers, and airless and conventional spray equipment.

MPI 95. Quick Drying Primer for Aluminum. A solvent based, alkyd or modified alkyd Q.D. anti-corrosive primer for use on prepared interior and exterior aluminum surfaces. This primer is used as part of a system for items in residential, commercial and industrial locations that are exposed to light corrosive environments. This primer will be finish coated with conventional latex and alkyd paints as well as MPI #81 & 96 Quick Drying Enamels and for interior surfaces MPI # 151,153 or 154 W.B. Light Industrial Coating (formerly MPI #110) or for exterior surfaces MPI #161,163,164 W.B. Light Industrial Coating (formerly MPI #110).

MPI 101. Epoxy Anti-Corrosive Metal Primer. A solvent based, two component, epoxy, anti-corrosive primer for exterior and interior, ferrous and galvanized metal surfaces. Specified for use over new, cleaned metals and as a spot primer or full coat over previous epoxy coatings that have been properly prepared with hand, power tool or abrasive blasting cleaning methods. Finish coatings include MPI #77 Cold Cured Epoxy, MPI #98 and #108 High Build Epoxy and for interior surfaces MPI # 151,153 or 154 W.B. Light Industrial Coating (formerly MPI #110) or for exterior surfaces MPI #161,163,164 W.B. Light Industrial Coating (formerly MPI #110). Application methods will include using brushes, rollers, and airless and conventional spray

MPI 108. High Build Epoxy Coating, Low Gloss. A two component epoxy, high solids, low gloss coating for use on interior or exterior concrete, masonry and primed metal surfaces. Metal surfaces may be primed with

conventional epoxy primers, epoxy zinc rich primers or inorganic zinc rich primers. For increased durability, this product may be top coated with epoxy or polyurethane enamels

MPI 116. Epoxy Block Filler. A solvent based, two component, epoxy, high solids coating for unfilled, interior and exterior block surfaces that are to be coated with a chemically resistant finish. Resistant to water, alkalis, chemicals and solvents. Specified in areas of high humidity, such as public showers, pools and washrooms. Primarily used with MPI #77 Cold Cure Epoxy, #98 High Build Epoxy and #115 water based Epoxy finish coatings. Application is predominantly by roller or brush.

MPI 119. Latex, Exterior Flat, Gloss Level 6. A water based, acrylic co-polymer emulsion type, gloss, pigmented coating for exterior primed wood and metal trim, sash, frames and doors. Must be mildew resistant. Application methods will include using brushes, rollers, and airless and conventional spray equipment.

MPI 134. Galvanized Primer (Waterbased). A water based metal primer, composed of anti-corrosive pigments and acrylic resins, for cleaned/etched galvanized metal. Designed for use with water based finish coatings, on interior surfaces, in low humidity conditions. Paint systems using this primer will be specified for new and repainting work in residential, commercial and light industrial applications. Application includes use of brushes, rollers, and airless and conventional spray equipment.

MPI 138. Interior High Performance Latex, MPI Gloss Level 2. Requires a properly-prepared Level 4 drywall finish (i.e. assuming no critical lighting conditions). See "Standard Specification for Application and Finishing of Gypsum Board – ASTM C 840". A high performance architectural latex coating, Gloss Level 2 (a 'velvet-like' finish). Designed to provide a significantly higher level of performance than conventional latex paints in the areas of scrub resistance, burnish resistance, and ease of stain removal.

MPI 139. Interior High Performance Latex, MPI Gloss Level 3. Requires a properly-prepared Level 5 drywall finish. See "Standard Specification for Application and Finishing of Gypsum Board – ASTM C 840". A high performance architectural latex coating, Gloss Level 3 (an 'eggshell-like' finish, similar to Alkyd eggshell). Designed to provide a significantly higher level of performance than conventional latex paints in the areas of scrub resistance, burnish resistance, and ease of stain removal.

MPI 140. Interior High Performance Latex, MPI Gloss Level 4. Requires a properly-prepared Level 5 drywall finish. See "Standard Specification for Application and Finishing of Gypsum Board – ASTM C 840". A high performance architectural latex coating, Gloss Level 4 (a 'satin-like' finish). Designed to provide a significantly higher level of performance than conventional latex paints in the areas of scrub resistance, burnish resistance, and ease of stain removal.

MPI 141. Interior High Performance Latex MPI Gloss Level 5. Requires a properly-prepared Level 5 drywall finish. See "Standard Specification for Application and Finishing of Gypsum Board – ASTM C 840". A high performance architectural latex coating, Gloss Level 5 - Semi-Gloss. Designed to provide a significantly higher level of performance than conventional latex paints in the areas of scrub resistance, burnish resistance, and ease of stain removal.

MPI 144. Institutional Low Odor / VOC Interior Latex, MPI Gloss Level 2.
Requires a properly-prepared Level 4 drywall finish (i.e. assuming no critical lighting conditions). See "Standard Specification for Application and Finishing of Gypsum Board – ASTM C 840". A white or colored latex paint with low odor characteristics and a VOC of less than 10 grams per liter. For use in areas such as hospitals and other occupied buildings where the odor and VOC levels of conventional latex products would preclude their use.

MPI 145. Institutional Low Odor / VOC Interior Latex, MPI Gloss Level 3.
Requires a properly-prepared Level 5 drywall finish. See "Standard Specification for Application and Finishing of Gypsum Board – ASTM C 840". A white or colored latex paint with low odor characteristics and a VOC of less than 10 grams per liter. For use in areas such as hospitals and other occupied buildings where the odor and VOC levels of conventional latex products would preclude their use.

MPI 146. Institutional Low Odor/VOC Interior Latex, MPI Gloss Level 4. Requires a properly-prepared Level 5 drywall finish. See "Standard Specification for Application and Finishing of Gypsum Board – ASTM C 840". A white or colored latex paint with low odor characteristics and a VOC of less than 10 grams per liter. For use in areas such as hospitals and other occupied buildings where the odor and VOC levels of conventional latex products would preclude their use.

MPI 147. Institutional Low Odor / VOC Interior Latex, Semi-Gloss, MPI Gloss Level 5. Requires a properly-prepared Level 5 drywall finish. See "Standard Specification for Application and Finishing of Gypsum Board – ASTM C 840". A white or colored latex paint with low odor characteristics and a VOC of less than 10 grams per liter. For use in areas such as hospitals and other occupied buildings where the odor and VOC levels of conventional latex products would preclude their use.

MPI 153. Interior W.B. Light Industrial Coating, Semi-Gloss, MPI Gloss Level 5. A water based, pigmented, emulsion coating for interior primed wood and metal surfaces (e.g. walls, doors, frames, trim and sash) providing resistance to moderate abrasion and mild chemical exposure and corrosive conditions.

MPI 154. Interior W.B. Light Industrial Coating, Gloss, MPI Gloss Level 6.
A water based, pigmented, emulsion coating for interior wood and metal surfaces (e.g. doors, frames, trim and sash) providing resistance to moderate abrasion and mild chemical exposure and corrosive conditions.

MPI 161. Exterior W.B. Light Industrial Coating, MPI Gloss Level 3.
A water based, pigmented, emulsion coating for exterior primed wood and metal surfaces (e.g. walls, doors, frames, trim and sash) providing resistance to moderate abrasion and mild chemical exposure and corrosive conditions.

MPI 163. Exterior W.B. Light Industrial Coating, Semi-Gloss, MPI Gloss Level 5. A water based, pigmented, emulsion coating for exterior primed wood and metal surfaces (e.g. walls, doors, frames, trim and sash) providing resistance to moderate abrasion and mild chemical exposure and corrosive conditions

MPI 164. Exterior W.B. Light Industrial Coating, Gloss, MPI Gloss Level 6.
A water based, pigmented, emulsion coating for exterior primed wood and metal surfaces (e.g. doors, frames, trim and sash) providing resistance to moderate abrasion and mild chemical exposure and corrosive conditions.

PART 3 EXECUTION

3.1 PROTECTION OF AREAS AND SPACES NOT TO BE PAINTED

Prior to surface preparation and coating applications, install mask, or otherwise to protect, hardware, hardware accessories, machined surfaces, radiator covers, plates, lighting fixtures, public and private property, and other such items not to be coated that are in contact, if it is necessary move the furniture to another area, try to

minimize the time of furniture moves to with surfaces to be coated. Following completion of painting, workmen skilled in the trades involved shall reinstall removed items. Restore surfaces contaminated by coating materials, to original condition and repair damaged items. Move each furnish or equipment during the paint process as necessary and relocate it after finish.

3.2 RESEALING OF EXISTING EXTERIOR JOINTS

3.2.1 Surface Condition

Surfaces shall be clean, dry to the touch, and free from frost and moisture; remove grease, oil, wax, lacquer, paint, defective backstop, or other foreign matter that would prevent or impair adhesion. Where adequate grooves have not been provided, clean out to a depth of 13 mm 1/2 inch and grind to a minimum width of 6 mm 1/4 inch without damage to adjoining work. Grinding shall not be required on metal surfaces.

3.2.2 Backstops

In joints more than 13 mm 1/2 inch deep, install glass fiber roving or neoprene, butyl, polyurethane, or polyethylene foams free of oil or other staining elements as recommended by sealant manufacturer. Backstop material shall be compatible with sealant. Do not use oakum and other types of absorptive materials as backstops.

3.2.3 Primer and Bond Breaker

Install the type recommended by the sealant manufacturer.

3.2.4 Ambient Temperature

Between 4 degrees C 38 degrees F and 35 degrees C 95 degrees F when applying sealant.

3.2.5 Exterior Sealant

For joints in vertical surfaces, provide ASTM C 920, Type S or M, Grade NS, Class 25, Use NT. For joints in horizontal surfaces, provide ASTM C 920, Type S or M, Grade P, Class 25, Use T. Color(s) shall be selected by the Contracting Officer. Apply the sealant in accordance with the manufacturer's printed instructions. Force sealant into joints with sufficient pressure to fill the joints solidly. Sealant shall be uniformly smooth and free of wrinkles.

3.2.6 Cleaning

Immediately remove fresh sealant from adjacent areas using a solvent recommended by the sealant manufacturer. Upon completion of sealant application, remove remaining smears and stains and leave the work in a clean condition. Allow sealant time to cure, in accordance with manufacturer's recommendations, prior to coating.

3.3 SURFACE PREPARATION

Remove dirt, splinters, loose particles, grease, oil, disintegrated coatings, and other foreign matter and substances deleterious to coating performance as specified for each substrate before application of paint or surface treatments. Oil and grease shall be removed prior to mechanical cleaning. Cleaning shall be programmed so that dust and other contaminants will not fall on wet, newly painted surfaces. Exposed ferrous metals such as nail heads on or in contact with surfaces to be painted with water-thinned paints, shall be spot-primmed with a suitable corrosion-inhibitive primer capable of preventing flash rusting and compatible with the coating specified for the adjacent areas.

3.3.1 Additional Requirements for Preparation of Surfaces With Existing Coatings

Before application of coatings, perform the following on surfaces covered by soundly-adhered coatings, defined as those which cannot be removed with a putty knife:

a. Test existing finishes for lead before sanding, scraping, or removing. If lead is present, refer to paragraph Toxic Materials.

b. Wipe previously painted surfaces to receive solvent-based coatings, except stucco and similarly rough surfaces clean with a clean, dry cloth saturated with mineral spirits. Allow surface to dry. Wiping shall immediately precede the application of the first coat of any coating, unless specified otherwise.

c. Sand existing glossy surfaces to be painted to reduce gloss. Brush, and wipe clean with a damp cloth to remove dust.

d. The requirements specified are minimum. Comply also with the application instructions of the paint manufacturer.

e. Previously painted surfaces specified to be repainted shall be thoroughly cleaned of all grease, dirt, dust or other foreign matter.

f. Blistering, cracking, flaking and peeling or other deteriorated coatings shall be removed.

h. Slick surfaces shall be roughened. Damaged areas such as, but not limited to, nail holes, cracks, chips, and spalls shall be repaired with suitable material to match adjacent undamaged areas.

i. Edges of chipped paint shall be feather edged and sanded smooth.

j. Rusty metal surfaces shall be cleaned. Solvent, mechanical, or chemical cleaning methods shall be used to provide surfaces suitable for painting.

k. New, proposed coatings shall be compatible with existing coatings.

3.3.2 Existing Coated Surfaces with Minor Defects

Sand, spackle, and treat minor defects to render them smooth. Minor defects are defined as scratches, nicks, cracks, gouges, spalls, alligatoring, chalking, and irregularities due to partial peeling of previous coatings. Remove chalking by sanding or blasting.

3.3.3 Removal of Existing Coatings

Remove existing coatings from the following surfaces:

a. Surfaces containing large areas of minor defects;

b. Surfaces containing more than 20 percent peeling area; and

c. Surfaces designated by the Contracting Officer, such as surfaces where rust shows through existing coatings.

3.3.4 Substrate Repair

a. Repair substrate surface damaged during coating removal;

b. Sand edges of adjacent soundly-adhered existing coatings so they are tapered as smooth as practical to areas involved with coating removal; and

c. Clean and prime the substrate as specified.

3.4 PREPARATION OF METAL SURFACES

Before application of paints and other products make a visual inspection, and prepare the surface according to the following cleaning standard procedures.

3.4.1 Cleaning Standard Definitions

a. SSPC SP1 SOLVENT CLEANING

The removal of all visible oil, grease, soil, drawing and cutting compounds and other soluble contaminants from surfaces with solvents or commercial cleaners using various methods of cleaning such as wiping, dipping, steam cleaning or vapor degreasing. It is generally conceded that solvent wiping will not positively remove all oil, grease and other soluble contaminants from the surface. Therefore, a more efficient cleaning method such as vapor degreasing or steam cleaning should be employed where coatings will not tolerate any oil, grease and other soluble contaminants residue. Oil, grease and other soluble contaminants removal by solvent cleaning is included in organic solvents may not remove water soluble contaminants such as acid and alkali salts. Such contaminants should be removed using water and/or water-based cleansing agents.

b. SSPC SP2 HAND TOOL CLEANING

Removal of all loose mill scale, loose rust, loose paint and other loose detrimental foreign matter by the use of non – power hand tools. Hand tool cleaning will not remove adherent mill scale, rust and paint. Mill scale, rust and paint are considered adherent if they cannot be removed by lifting with a dull putty knife.

c. SSPC SP3 POWER TOOL CLEANING

The removal of all loose mill scale, loose rust, loose paint and other loose detrimental foreign matter by the use of power– assisted hand tools. Power tool cleaning will not remove adherent mill scale, rust and paint. Mill scale, rust and paint are considered adherent if they cannot be removed by lifting with a dull putty knife. Power Tool Cleaning usually provides a slightly higher degree of cleanliness than Hand Tool Cleaning, bur is not regarded as adequate surface preparation for long-term exterior exposure of most high-performance coating systems.

d. SSPC SP5 WHITE METAL BLAST CLEANING

The complete removal of all visible oil, grease dirt, dust, mill scale, rust, paint oxides, corrosion products and other foreign mater by compressed air nozzle blasting. Centrifugal wheels or other specified method.

e. SSPC SP6 BRUSH-OFF BLAST CLEANING

The removal of all visible oil, grease, dirt, dust, mill scale, rust, paint oxides, corrosion products and other foreign matter by compressed air nozzle blasting, centrifugal wheels or other specified method.
Discoloration caused by certain stains shall be limited to no more that 33 percent of each unit area. Unit area is approximately 58cm^2.

f. SSPC SP7 BRUSH – OFF BLAST CLEANING

The removal of all visible oil, grease, dirt, loose mill scale, loose rust, and loose paint by compressed air nozzle blasting, centrifugal wheels or other specified method. Tightly adherent mill scale, rust and paint may remain on the surface if they cannot be removed by lifting with a dull putty knife.

g. SSPC SP8 PICKLING

Complete removal of all rust, mill scale and foreign matter by chemical reaction or electrolysis in acid solutions. The degree of cleanliness is similar to SP5 White Metal Blast Cleaning.

h. SSPC SP10 NEAR-WHITE BLAST CLEANING

A near-white blast cleaned surface when viewed without magnification, shall be free of all visible oil, grease, dirt, dust, mill scale, rust, paint, oxides, corrosion products, and other foreign matter, except for staining. Staining shall be limited to no more than 5 Percent of each square inch of surface area and may consist of light shadows, slight steaks, or minor discolorations caused by stains of rust, stains of mill scale, or stains of previously applied paint. When painting is specified, the surface shall be roughened to a degree suitable for the specified paint system. Immediately prior to paint application, the surface shall comply with the degree of cleaning.

i. SSPC SP11 POWER TOOL CLEANING TO BARE METAL

Metallic surfaces that are prepared according to this specification, when viewed without magnification, shall be free of all visible oil, grease, dirt, dust, mill scale, rust, paint, oxide corrosion products, and other foreign matter. Slight residues of rust and paint may be left in the lower portions of pits if the original surface is pitted. Differs from SP3 in that it requires more thorough cleaning and surface profile not less than 25 microns. For areas where blasting is prohibited or not feasible.

j. SSPC SP12 HIGH AND ULTRA-HIGH PRESSURE WATER JETTING FOR STEEL AND OTHER HARD MATERIALS

This standard provides requirements for the use of high-and ultra-high pressure water jetting to achieve various degrees of surface cleanliness. This standard is limited in scope to the use of water only, without the addition of solid particles in the stream.

3.4.2 Visual Preparation Grades

Wj-1. Removal of previously existing visible rust, coating ,mill scale and foreign matter to a uniform matt metal finish .
Wj-2. Cleaning to a uniform matt finish with at least 95% of the surface area being free of all previously existing visible residues and the remaining 5% only containing randomly dispersed stains of rust , coatings and foreign matters .
Wj-3. A uniform matt finish with at least two –thirds of the surface being free of all visible residues (except mill scale) and the remaining one- third only containing randomly dispersed stains of previously existing rust, coatings and foreign matters.
Wj-4. Uniform removal of all loose rust mill scale and loose coatings.

Sc-1. An sc-1 surface is free from all detectable contaminants as determined by using available field test equipment whose sensitivity approximates laboratory equipment. Contaminants relevant in this standard are chlorides, iron-soluble salts and sulphates.
Sc-2. An sc-2 surface has less than 7 microgram / cm^2 chloride contamination , less than 10 microgram / cm^2 of soluble ferrous ions and / less than 16 microgram / cm^2 sulphate contamination as verified by field or laboratory analysis using reliable , reproducible test equipment.
Sc-3. An sc-3 surface has less than 50 microgram / cm^2 chloride and sulphate contamination as verified by field or laboratory analysis using reliable, reproducible test equipment

3.4.3 Existing and New Ferrous Surfaces

a. Ferrous Surfaces including Shop-coated Surfaces and Small Areas That Contain Rust, Mill Scale and Other Foreign Substances: Solvent clean or detergent wash in accordance with SSPC SP 1 to remove oil and grease. Where shop coat is missing or damaged, clean according to SSPC SP 2, SSPC SP 3, SSPC SP 6, or SSPC SP 10. Brush-off blast remaining surface in accordance with SSPC SP 7; Water jetting to SSPC SP 12 WJ-4 may be used to remove loose coating and other loose materials. Use inhibitor as recommended by coating manufacturer to prevent premature rusting. Shop-coated ferrous surfaces shall be protected from corrosion by treating and touching up corroded areas immediately upon detection.

b. Surfaces With More Than 20 Percent Rust, Mill Scale, and Other Foreign Substances: Clean entire surface in accordance with SSPC SP 6/SSPC SP 12 WJ-3, SSPC SP 10/SSPC SP 12 WJ-2.

c. Metal Floor Surfaces to Receive Nonslip Coating: Clean in accordance with SSPC SP 10, SSPC SP 12 WJ-2.

3.4.4 Final Ferrous Surface Condition:

For tool cleaned surfaces, the requirements are stated in SSPC SP 2 and SSPC SP 3.

For abrasive blast cleaned surfaces, the requirements are stated in SSPC SP 7, SSPC SP 6, and SSPC SP 10.

For waterjet cleaned surfaces, the requirements are stated in SSPC SP 12.

3.4.5 Galvanized Surfaces

a. New or Existing Galvanized Surfaces With Only Dirt and Zinc Oxidation Products: Clean with solvent, steam, or non-alkaline detergent solution in accordance with SSPC SP 1. If the galvanized metal has been passivated or stabilized, the coating shall be completely removed by brush-off abrasive blast. New galvanized steel to be coated shall not be "passivated" or "stabilized". If the absence of hexavalent stain inhibitors is not documented, test and remove by one of the methods described therein.
b. Galvanized with Slight Coating Deterioration or with Little or No Rusting: Water jetting to SSPC SP 12 WJ3 to remove loose coating from surfaces with less than 20 percent coating deterioration and no blistering, peeling, or cracking. Use inhibitor as recommended by the coating manufacturer to prevent rusting.
c. Galvanized With Severe Deteriorated Coating or Severe Rusting: Water jet to SSPC SP 12 WJ3 degree of cleanliness. Spot abrasive blast rusted areas as described for steel in SSPC SP 6, and waterjet to SSPC SP 12, WJ3 to remove existing coating.

3.4.6 Non-Ferrous Metallic Surfaces

Aluminum and aluminum-alloy, lead, copper, and other nonferrous metal surfaces.

a. Surface Cleaning: Solvent clean in accordance with SSPC SP 1 and wash with mild non-alkaline detergent to remove dirt and water soluble contaminants.

3.4.7 Terne-Coated Metal Surfaces

Solvent clean surfaces with mineral spirits. Wipe dry with clean, dry cloths.

3.4.8 Existing Surfaces with a Bituminous or Mastic-Type Coating

Remove chalk, mildew, and other loose material by washing with a solution of 0.20 liter (1/2 cup) trisodium phosphate, 0.1 liter(1/4 cup) household detergent, 1.6 liters(one quart) 5 percent sodium hypochlorite solution and 4.8 liters(3 quarts) of warm water.

3.5 PREPARATION OF CONCRETE AND CEMENTITIOUS SURFACE

3.5.1 Concrete and Masonry

a. Curing: Concrete, stucco and masonry surfaces shall be allowed to cure at least 30 days before painting, except concrete slab on grade, which shall be allowed to cure 90 days before painting.

b. Surface Cleaning: Remove the following deleterious substances.

(1) Dirt, Chalking, Grease, and Oil: Wash new and existing uncoated surfaces with a solution composed of 0.2 liter(1/2 cup) trisodium phosphate, 0.1 liter (1/4 cup)household detergent, and 6.4 liters(4 quarts) of warm water. Then rinse thoroughly with fresh water. Wash existing coated surfaces with a suitable detergent and rinse thoroughly. For large areas, water blasting may be used.

(2) Fungus and Mold: Wash new , existing coated, and existing uncoated surfaces with a solution composed of 0.2 liter(1/2 cup) trisodium phosphate, 0.1 liter(1/4 cup) household detergent, 1.6 liters(1 quart) 5 percent sodium hypochlorite solution and 4.8 liters(3 quarts) of warm water. Rinse thoroughly with fresh water.

(3) Paint and Loose Particles: Remove by wire brushing.

(4) Efflorescence: Remove by scraping or wire brushing followed by washing with a 5 to 10 percent by weight aqueous solution of hydrochloric (muriatic) acid. Do not allow acid to remain on the surface for more than five minutes before rinsing with fresh water. Do not acid clean more than 0.4 square meter(4 square feet) of surface, per workman, at one time.

c. Cosmetic Repair of Minor Defects: Repair or fill mortar joints and minor defects, including but not limited to spalls, in accordance with manufacturer's recommendations and prior to coating application.

d. Allowable Moisture Content: Latex coatings may be applied to damp surfaces, but not to surfaces with droplets of water. Do not apply epoxies to damp vertical surfaces or horizontal surfaces that exceed 3 lbs of moisture per 1000 square feet in 24 hours. In all cases follow manufacturers recommendations. Allow surfaces to cure a minimum of 30 days before painting.

3.5.2 Gypsum Board, Plaster, and Stucco

a. Surface Cleaning: Plaster and stucco shall be clean and free from loose matter; gypsum board shall be dry. Remove loose dirt and dust by brushing with a soft brush, rubbing with a dry cloth, or vacuum-cleaning prior to application of the first coat material. A damp cloth or sponge may be used if paint will be water-based.

b. Repair of Minor Defects: Prior to painting, repair joints, cracks, holes, surface irregularities, and other minor defects with patching plaster or spackling compound and sand smooth.

c. Allowable Moisture Content: Latex coatings may be applied to damp surfaces, but not surfaces with droplets of water. Do not apply epoxies to damp surfaces. New plaster to be coated shall have a maximum moisture content of 8 percent. In addition to moisture content requirements, allow new plaster to age a minimum of 30 days before preparation for painting.

3.6 PREPARATION OF WOOD AND PLYWOOD SURFACES

3.6.1 New, existing uncoated, existing coated Plywood and Wood Surfaces, Except Floors:

a. Wood surfaces shall be cleaned of foreign matter.

Surface Cleaning: Surfaces shall be free from dust and other deleterious substances and in a condition approved by the Contracting Officer prior to receiving paint or other finish. Do not use water to clean uncoated wood. Scrape to remove loose coatings. Lightly sand to roughen the entire area of previously enamel-coated wood surfaces.

b. Removal of Fungus and Mold: Wash existing coated surfaces with a solution composed of 0.2 liter trisodium phosphate, 0.1 liter household detergent, 1.6 liters 5 percent sodium hypochlorite solution and 4.8 liters of warm water. Rinse thoroughly with fresh water.

c. Moisture content of the wood shall not exceed 12 percent as measured by a moisture meter.

d. Wood surfaces adjacent to surfaces to receive water-thinned paints shall be primed and/or touched up before applying water-thinned paints.

e. Cracks and Nailheads: Set and putty stop nailheads and putty cracks after the prime coat has dried.

f. Cosmetic Repair of Minor Defects:

(1) Knots and Resinous Wood and Fire, Smoke, Water, and Color Marker Stained Existing Coated Surface: Prior to application of coating, cover knots and stains with two or more coats of 1.3-kg-cut shellac varnish, plasticized with 0.14 liters of castor oil per liter. Scrape away existing coatings from knotty areas, and sand before treating. Prime before applying any putty over shellacked area.

(2) Open Joints and Other Openings: Fill with whiting putty, (linseed oil putty). Sand smooth after putty has dried.

(3) Checking: Where checking of the wood is present, sand the surface, wipe and apply a coat of pigmented orange shellac. Allow to dry before paint is applied.

g. Prime Coat For New Exterior Surfaces: Prime coat wood doors, windows, frames, and trim before wood becomes dirty, warped, or weathered.

3.6.2 Interior Wood Surfaces, Stain Finish

Interior wood surfaces to receive stain shall be sanded. Oak and other open-grain wood to receive stain shall be given a coat of wood filler not less than 8 hours before the application of stain; excess filler shall be removed and the surface sanded smooth.

3.6.3 Water Blasting of Existing Coated Wood Surfaces:

Water blasting shall be provided for the following surfaces:

a. Sample Panel: Prior to the initial surface cleaning, water blast a representative surface designated by the Contracting Officer. Final surface condition of remaining work shall be similar to sample panel approved by the Contracting Officer.

b. Initial Surface Cleaning: Water blasting shall consist of washing surfaces to receive paint with a high pressure spray, to remove loose paint, dirt, and other foreign or deleterious materials. The working pressure shall be between 2.8 and 4.8 MPa at a nozzle operating rate of a minimum 75 liters per minute. Do not flood vents or damage windows and floors. If the pressure specified will cause damage to existing wood, advise the Contracting Officer and obtain permission to vary the pressure. Direct the wash nozzle at the surface at an angle of approximately 75 degrees with the surface and at a distance not greater than 1.5m to apply water pressure required to remove loose paint, dirt, chalking, and other foreign matter.

c. Final Surface Cleaning: After allowing the surfaces to dry for a minimum of 24 hours, remove remaining dirt, splinters, loose particles, disintegrated and loose paint, grease, oil, and other foreign matter from the surface.

3.7 APPLICATION

3.7.1 Coating Application

Apply coating materials in accordance with field painting procedures methods are applicable to all substrates, except as modified herein.

At the time of application, paint shall show no signs of deterioration. Uniform suspension of pigments shall be maintained during application.

Unless otherwise specified or recommended by the paint manufacturer, paint may be applied by brush, roller, or spray. Use trigger operated spray nozzles for water hoses. Rollers for applying paints and enamels shall be of a type designed for the coating to be applied and the surface to be coated. Wear protective clothing and respirators when applying oil-based paints or using spray equipment with any paints.

Paints, except water-thinned types, shall be applied only to surfaces that are completely free of moisture as determined by sight or touch.

Thoroughly work coating materials into joints, crevices, and open spaces. Special attention shall be given to insure that all edges, corners, crevices, welds, and rivets receive a film thickness equal to that of adjacent painted surfaces.

Each coat of paint shall be applied so dry film shall be of uniform thickness and free from runs, drops, ridges, waves, pinholes or other voids, laps, brush marks, and variations in color, texture, and finish.

Touch up damaged coatings before applying subsequent coats. Interior areas shall be broom clean and dust free before and during the application of coating material.

When fire protection sprinkler systems are to be painted, apply paint to new fire extinguishing sprinkler systems including valves, piping, conduit, hangers, supports, miscellaneous metal work, and accessories. Shield sprinkler heads with protective coverings while painting is in progress. Remove sprinkler heads which have been painted and replace with new sprinkler heads. For piping in unfinished spaces, provide primed surfaces with one coat of red alkyd gloss enamel to a minimum dry film thickness of 0.025 mm. Unfinished spaces include attic spaces, spaces above suspended ceilings, crawl spaces, pipe chases, mechanical equipment room, and space where walls or ceiling are not painted or not constructed of a prefinished material. For piping in finished areas, provide prime surfaces with two coats of paint to match adjacent surfaces, except provide valves and operating accessories with one coat of red alkyd gloss enamel. Upon completion of painting, remove protective covering from sprinkler heads.

a. Drying Time: Allow time between coats, as recommended by the coating manufacturer, to permit thorough drying, but not to present topcoat adhesion problems. Provide each coat in specified condition to receive next coat.

b. Primers, and Intermediate Coats: Do not allow primers or intermediate coats to dry more than 30 days, or longer than recommended by manufacturer, before applying subsequent coats. Follow manufacturer's recommendations for surface preparation if primers or intermediate coats are allowed to dry longer than recommended by manufacturers of subsequent coatings. Each coat shall cover surface of preceding coat or surface completely, and there shall be a visually perceptible difference in shades of successive coats.

c. Finished Surfaces: Provide finished surfaces free from runs, drops, ridges, waves, laps, brush marks, and variations in colors.

d. Thermosetting Paints: Topcoats over thermosetting paints (epoxies and urethanes) should be applied within the overcoating window recommended by the manufacturer.

3.7.2 Mixing and Thinning of Paints

Reduce paints to proper consistency by adding fresh paint, except when thinning is mandatory to suit surface, temperature, weather conditions, application methods, or for the type of paint being used. Obtain written permission from the Contracting Officer to use thinners. The written permission shall include quantities and types of thinners to use.

When thinning is allowed, paints shall be thinned immediately prior to application with not more than 0.125 L of suitable thinner per liter. The use of thinner shall not relieve the Contractor from obtaining complete hiding, full film thickness, or required gloss. Thinning shall not cause the paint to exceed limits on volatile organic compounds. Paints of different manufacturers shall not be mixed.

3.7.3 Two-Component Systems

Two-component systems shall be mixed in accordance with manufacturer's instructions. Any thinning of the first coat to ensure proper penetration and sealing shall be as recommended by the manufacturer for each type of substrate.

3.7.4 Coating Systems

a. Systems by Substrates: Apply coatings that conform to the respective specifications listed in the following Tables:

Table

Division 3. Exterior Concrete and Cementitious Paint Table
Division 4. Exterior Concrete Masonry Units and Cementitious Paint Table
Division 5. Exterior Metal, Ferrous and Non-Ferrous Paint Table
Division 6. Exterior Wood; Dressed Lumber, Paneling, Decking, Shingles Paint Table
Division 9: Exterior Stucco and Cementitious Paint Table

Division 3. Interior Concrete and Cementitious Paint Table
Division 4. Interior Concrete Masonry Units and Cementitious Paint Table
Division 5. Interior Metal, Ferrous and Non-Ferrous Paint Table
Division 6. Interior Wood Paint Table
Division 9: Interior Plaster, Gypsum Board, Textured Surfaces and Cementitious Paint Table

b. Minimum Dry Film Thickness (DFT): Apply paints, primers, varnishes, enamels, undercoats, and other coatings to a minimum dry film thickness of 0.038 mm each coat unless specified otherwise in the Tables. Coating thickness where specified, refers to the minimum dry film thickness.

c. Coatings for Surfaces Not Specified Otherwise: Coat surfaces which have not been specified, the same as surfaces having similar conditions of exposure.

d. Existing Surfaces Damaged During Performance of the Work, Including New Patches In Existing Surfaces: Coat surfaces with the following:

(1) One coat of primer.

(2) One coat of undercoat or intermediate coat.

(3) One topcoat to match adjacent surfaces.

e. Existing Coated Surfaces To Be Painted: Apply coatings conforming to the respective specifications listed in the Tables herein, except that pretreatments, sealers and fillers need not be

provided on surfaces where existing coatings are soundly adhered and in good condition. Do not omit undercoats or primers.

3.8 COATING SYSTEMS FOR METAL

Apply coatings of Tables in Division 5 for Exterior and Interior;

a. Apply specified ferrous metal primer on the same day that surface is cleaned, to surfaces that meet all specified surface preparation requirements at time of application.

b. Inaccessible Surfaces: Prior to erection, use one coat of specified primer on metal surfaces that will be inaccessible after erection.

c. Shop-primed Surfaces: Touch up exposed substrates and damaged coatings to protect from rusting prior to applying field primer.

e. Pipes and Tubing: The semitransparent film applied to some pipes and tubing at the mill is not to be considered a shop coat, but shall be overcoated with the specified ferrous-metal primer prior to application of finish coats.

f. Exposed Nails, Screws, Fasteners, and Miscellaneous Ferrous Surfaces. On surfaces to be coated with water thinned coatings, spot prime exposed nails and other ferrous metal with latex primer.

3.9 COATING SYSTEMS FOR CONCRETE AND CEMENTITIOUS SUBSTRATES

Apply coatings of Tables in Division 3, 4 and 9 for Exterior and Interior.

3.10 COATING SYSTEMS FOR WOOD AND PLYWOOD

a. Apply coatings of Tables in Division 6 for Exterior and Interior.

b. Prior to erection, apply two coats of specified primer to treat and prime wood and plywood surfaces which will be inaccessible after erection.

c. Apply stains in accordance with manufacturer's printed instructions.

3.11 PIPING IDENTIFICATION

Piping Identification, including Surfaces in Concealed Spaces: Provide in accordance with color code for pipelines, as approved by Contracting Officer MIL-STD-101 or ASME A13.1. Place stenciling in clearly visible locations. On piping not covered by color code for pipelines, stencil approved names or code letters, in letters a minimum of 13 mm(1/2 inch) high for piping and a minimum of 50 mm(2 inches) high elsewhere. Stencil arrow-shaped markings on piping to indicate direction of flow using black stencil paint.

3.12 INSPECTION AND ACCEPTANCE

In addition to meeting previously specified requirements, demonstrate mobility of moving components, including swinging and sliding doors, cabinets, and windows with operable sash, for inspection by the Contracting Officer. Perform this demonstration after appropriate curing and drying times of coatings have elapsed and prior to invoicing for final payment.

3.13 WASTE MANAGEMENT

As specified in the Waste Management Plan and as follows. Do not use kerosene or any such organic solvents to clean up water based paints. Properly dispose of paints or solvents in designated containers. Close and seal partially used containers of paint to maintain quality as necessary for reuse. Store in protected, well-ventilated,

fire-safe area at moderate temperature. Place materials defined as hazardous or toxic waste in designated containers. Set aside extra paint for future color matches or reuse by the Government. Where local options exist for leftover paint recycling, collect all waste paint by type and provide for delivery to recycling or collection facility for reuse by local organizations.

3.14 PAINT TABLES

All DFT's (Dry Film Thickness) are minimum values. Use only interior paints and coatings that meet VOC requirements. Follow the manufacturer instructions in each case, which must be submitted.

Historically, the Government has used Flat (G1/G2), Eggshell (G3), Semi-Gloss (G5), and Gloss (G6).

3.14.1 EXTERIOR PAINT TABLES

DIVISION 3: EXTERIOR CONCRETE AND CEMENTITIOUS PAINT TABLE

A. New and uncoated or existing, previously painted concrete; vertical surfaces, including undersides of balconies and soffits but excluding tops of slabs:

Latex Flat
Primer: Latex, Exterior Flat, Gloss Level 1. MPI 10
Intermediate: Latex, Exterior Flat, Gloss Level 1. MPI 10
Topcoat: Latex, Exterior Flat, Gloss Level 1. MPI 10
System DFT: (3.5 mils) 88 microns

Latex Semigloss
Primer: Latex, Exterior Flat, Gloss Level 5. MPI 11
Intermediate: Latex, Exterior Flat, Gloss Level 5. MPI 11
Topcoat: Latex, Exterior Flat, Gloss Level 5. MPI 11
System DFT: (3.5 mils) 88 microns

Latex Gloss
Primer: Latex, Exterior Flat, Gloss Level 6. MPI 119
Intermediate: Latex, Exterior Flat, Gloss Level 6. MPI 119
Topcoat: Latex, Exterior Flat, Gloss Level 6. MPI 119
System DFT: (3.5 mils) 88 microns

Primer as recommended by manufacturer. Topcoat: Coating to match adjacent surfaces.

DIVISION 4: EXTERIOR CONCRETE MASONRY UNITS AND CEMENTITIOUS PAINT TABLE

A. New and existing concrete masonry on uncoated surface:

Latex Flat
Block Filler: Block Filler, Latex, Interior/Exterior. MPI 4
Primer: N/A
Intermediate: Latex, Exterior Flat, Gloss Level 1. MPI 10
Topcoat: Latex, Exterior Flat, Gloss Level 1. MPI 10
System DFT: (11 mils) 275 microns

Latex Semigloss
Block Filler: Block Filler, Latex, Interior/Exterior. MPI 4
Primer: N/A
Intermediate: Latex, Exterior Flat, Gloss Level 5. MPI 11
Topcoat: Latex, Exterior Flat, Gloss Level 5. MPI 11

System DFT: (11 mils) 275 microns

Latex Gloss
Block Filler: Block Filler, Latex, Interior/Exterior. MPI 4
Primer: N/A
Intermediate: Latex, Exterior Flat, Gloss Level 6. MPI 119
Topcoat: Latex, Exterior Flat, Gloss Level 6. MPI 119
System DFT: (11 mils) 275 microns

Topcoat: Coating to match adjacent surfaces.

DIVISION 5: EXTERIOR METAL, FERROUS AND NON-FERROUS PAINT TABLE

STEEL / FERROUS SURFACES

A. New Steel that has been hand or power tool cleaned to SSPC SP 2 or SSPC SP 3

Alkyd Semigloss
Primer: Primer, Metal, Surface Tolerant. MPI 23
Intermediate: Alkyd, Exterior, Gloss Level 5. MPI 94
Topcoat: Alkyd, Exterior, Gloss Level 5. MPI 94
System DFT: (5.25 mils) 131 microns

Alkyd Gloss
Primer: Primer, Metal, Surface Tolerant. MPI 23
Intermediate: Alkyd, Exterior, Gloss Level 6. MPI 9
Topcoat: Alkyd, Exterior, Gloss Level 6. MPI 9
System DFT: (5.25 mils) 131 microns

B. New Steel that has been blast-cleaned to SSPC SP 6:

Alkyd Semigloss
Primer: Primer, Alkyd, Anti-Corrosive for Metal. MPI 79
Intermediate: Alkyd, Exterior, Gloss Level 5. MPI 94
Topcoat: Alkyd, Exterior, Gloss Level 5. MPI 94
System DFT: (5.25 mils) 131 microns

Alkyd Gloss
Primer: Primer, Alkyd, Anti-Corrosive for Metal. MPI 79
Intermediate: Alkyd, Exterior, Gloss Level 6. MPI 9
Topcoat: Alkyd, Exterior, Gloss Level 6. MPI 9
System DFT: (5.25 mils) 131 microns

C. Existing steel that has been spot-blasted to SSPC SP 6:

Surface previously coated with alkyd or latex:
Waterborne Light Industrial Coating Semigloss
Spot Primer: Primer, Alkid, Anti-Corrosive for Metal. MPI 79
Intermediate: Light Industrial Coating, Exterior, Water Based, Gloss Level 5. MPI 163
Topcoat: Light Industrial Coating, Exterior, Water Based, Gloss Level 5. MPI 163
System DFT: (5 mils) 125 microns

Surface previously coated with alkyd or latex:
Waterborne Light Industrial Coating Gloss
Spot Primer: Primer, Alkid, Anti-Corrosive for Metal. MPI 79
Intermediate: Light Industrial Coating, Exterior Water Based, Gloss

Level 6. MPI 164
Topcoat: Light Industrial Coating, Exterior Water Based, Gloss
Level 6. MPI 164
System DFT: (5 mils) 125 microns

Surface previously coated with epoxy:
Waterborne Light Industrial Semigloss
Spot Primer: Primer, Epoxy, Anti – Corrosive, for Metal. MPI 101
Intermediate: Light Industrial Coating, Exterior, Water Based, Gloss Level 5. MPI 163
Topcoat: Light Industrial Coating, Exterior, Water Based, Gloss Level 5. MPI 163
System DFT: (5 mils) 125 microns

Surface previously coated with epoxy:
Waterborne Light Industrial Gloss
Spot Primer: Primer, Epoxy, Anti – Corrosive, for Metal. MPI 101
Intermediate: Light Industrial Coating, Exterior Water Based, Gloss
Level 6. MPI 164
Topcoat: Light Industrial Coating, Exterior Water Based, Gloss
Level 6. MPI 164
System DFT: (5 mils) 125 microns

Pigmented Polyurethane Gloss
Spot Primer: Primer, Epoxy, Anti – Corrosive, for Metal. MPI 101
Intermediate: Epoxy, High Build, Low Gloss. MPI 108
Topcoat: Polyurethane Two–Component Pigmented, Gloss Level 6. MPI 72
System DFT: (8.5 mils) 212 microns

D. New and existing steel blast cleaned to SSPC SP 10:

Waterborne Light Industrial (Semigloss)
Primer: Epoxy, Anti – Corrosive, for Metal. MPI 101
Intermediate: Epoxy, High Build, Low Gloss. MPI 108
Topcoat: Light Industrial Coating, Exterior, Water Based, Gloss Level 5. MPI 163
System DFT: (8.5 mils) 212 microns

Waterborne Light Industrial (Gloss)
Primer: Epoxy, Anti – Corrosive, for Metal. MPI 101
Intermediate: Epoxy, High Build, Low Gloss. MPI 108
Topcoat: Light Industrial Coating, Exterior Water Based, Gloss
Level 6. MPI 164
System DFT: (8.5 mils) 212 microns

Pigmented Polyurethane(Gloss)
Primer: Epoxy, Anti – Corrosive, for Metal. MPI 101
Intermediate: Epoxy, High Build, Low Gloss. MPI 108
Topcoat: Polyurethane, Two – Componenet, Pigmented, Gloss Level 6. MPI 72
System DFT: (8.5 mils) 212 microns

EXTERIOR GALVANIZED SURFACES

E. New Galvanized surfaces:

Cementitious primer / Latex (Flat)
Primer: Primer, Galvanized Metal, Cementitious. MPI 26
Intermediate: Latex, Exterior Flat, Gloss Level 1. MPI 10
Topcoat: Latex, Exterior Flat, Gloss Level 1. MPI 10

System DFT: (4.5 mils) 112 microns

Cementitious primer / Latex (Semigloss)
Primer: Primer, Galvanized Metal, Cementitious. MPI 26
Intermediate: Latex, Exterior Flat, Gloss Level 5. MPI 11
Topcoat: Latex, Exterior Flat, Gloss Level 5. MPI 11
System DFT: (4.5 mils) 112 microns

Cementitious primer / Latex (Gloss)
Primer: Primer, Galvanized Metal, Cementitious. MPI 26
Intermediate: Latex, Exterior Flat, Gloss Level 6. MPI 119
Topcoat: Latex, Exterior Flat, Gloss Level 6. MPI 119
System DFT: (4.5 mils) 112 microns

Waterborne Primer / Latex (Flat)
Primer: Primer, Galvanized, Water Based. MPI 134
Intermediate: Latex, Exterior Flat, Gloss Level 1. MPI 10
Topcoat: Latex, Exterior Flat, Gloss Level 1. MPI 10
System DFT: (4.5 mils) 112 microns

Waterborne Primer / Latex (Semigloss)
Primer: Primer, Galvanized, Water Based. MPI 134
Intermediate: Latex, Exterior Flat, Gloss Level 5. MPI 11
Topcoat: Latex, Exterior Flat, Gloss Level 5. MPI 11
System DFT: (4.5 mils) 112 microns

Waterborne Primer / Latex (Gloss)
Primer: Primer, Galvanized, Water Based. MPI 134
Intermediate: Latex, Exterior Flat, Gloss Level 6. MPI 119
Topcoat: Latex, Exterior Flat, Gloss Level 6. MPI 119
System DFT: (4.5 mils) 112 microns

Waterborne Primer / Waterborne Light Industrial Coating (Semigloss)
Primer: Primer, Galvanized, Water Based. MPI 134
Intermediate: Light Industrial Coating, Exterior, Water Based, Gloss Level 5. MPI 163
Topcoat: Light Industrial Coating, Exterior, Water Based, Gloss Level 5. MPI 163
System DFT: (4.5 mils) 112 microns

Waterborne Primer / Waterborne Light Industrial Coating (Gloss)
Primer: Primer, Galvanized, Water Based. MPI 134
Intermediate: Light Industrial Coating, Exterior Water Based, Gloss Level 6. MPI 164
Topcoat: Light Industrial Coating, Exterior Water Based, Gloss Level 6. MPI 164
System DFT: (4.5 mils) 112 microns

Epoxy Primer / Waterborne Light Industrial Coating (Semigloss)
Primer: Epoxy, Anti – Corrosive, for Metal. MPI 101
Intermediate: Light Industrial Coating, Exterior, Water Based, Gloss Level 5. MPI 163
Topcoat: Light Industrial Coating, Exterior, Water Based, Gloss Level 5. MPI 163
System DFT: (5 mils) 125 microns

Epoxy Primer / Waterborne Light Industrial Coating (Gloss)
Primer: Epoxy, Anti – Corrosive, for Metal. MPI 101
Intermediate: Light Industrial Coating, Exterior Water Based, Gloss

Level 6. MPI 164
Topcoat: Light Industrial Coating, Exterior Water Based, Gloss
Level 6. MPI 164
System DFT: (5 mils) 125 microns

Pigmented Polyurethane (Gloss)
Primer: Epoxy, Anti – Corrosive, for Metal. MPI 101
Intermediate: N/A
Topcoat: Polyurethane, Two – Componenet, Pigmented, Gloss Level 6. MPI 72
System DFT: (5 mils) 125 microns

F. Galvanized surfaces with slight coating deterioration; little or no rusting:

Waterborne Light Industrial Coating (Semigloss)
Primer: Primer, Galvanized, Water Based. MPI 134
Intermediate: N/A
Topcoat: Light Industrial Coating, Exterior, Water Based, Gloss Level 5. MPI 163
System DFT: (4.5 mils) 112 microns

Pigmented Polyurethane (Gloss)
Primer: Epoxy, Anti – Corrosive, for Metal. MPI 101
Intermediate: N/A
Topcoat: Polyurethane, Two – Componenet, Pigmented, Gloss Level 6. MPI 72
System DFT: (5 mils) 125 microns

G. Galvanized surfaces with severely deteriorated coating or rusting:

Waterborne Light Industrial Coating (Semigloss)
Primer: Epoxy, Anti – Corrosive, for Metal. MPI 101
Intermediate: Epoxy, High Build, Low Gloss. MPI 108
Topcoat: Light Industrial Coating, Exterior, Water Based, Gloss Level 5. MPI 163
System DFT: (8.5 mils) 212 microns

Waterborne Light Industrial Coating (Gloss)
Primer: Epoxy, Anti – Corrosive, for Metal. MPI 101
Intermediate: Epoxy, High Build, Low Gloss. MPI 108
Topcoat: Light Industrial Coating, Exterior Water Based, Gloss
Level 6. MPI 164
System DFT: (8.5 mils) 212 microns

Pigmented Polyurethane(Gloss)
Primer: Epoxy, Anti – Corrosive, for Metal. MPI 101
Intermediate: Epoxy, High Build, Low Gloss. MPI 108
Topcoat: Polyurethane, Two – Componenet, Pigmented, Gloss Level 6. MPI 72
System DFT: (5 mils) 125 microns

EXTERIOR SURFACES, OTHER METALS (NON-FERROUS)

H. Aluminum, aluminum alloy and other miscellaneous non-ferrous metal items not otherwise specified except hot metal surfaces, roof surfaces, and new prefinished equipment. Match surrounding finish:

Alkyd (Flat)
Primer: Primer, Quick Dry, for Aluminum. MPI 95

Intermediate: Alkyd, Exterior Flat, Gloss Level 1. MPI 8
Topcoat: Alkyd, Exterior Flat, Gloss Level 1. MPI 8
System DFT: (5 mils) 125 microns

Alkyd (Semigloss)
Primer: Primer, Quick Dry, for Aluminum. MPI 95
Intermediate: Alkyd, Exterior, Gloss Level 5. MPI 94
Topcoat: Alkyd, Exterior, Gloss Level 5. MPI 94
System DFT: (5 mils) 125 microns

Alkyd (Gloss)
Primer: Primer, Quick Dry, for Aluminum. MPI 95
Intermediate: Alkyd, Exterior, Gloss Level 6. MPI 9
Topcoat: Alkyd, Exterior, Gloss Level 6. MPI 9
System DFT: (5 mils) 125 microns

Waterborne Light Industrial Coating (Eggshell)
Primer: Primer, Quick Dry, for Aluminum. MPI 95
Intermediate: Light Industrial Coating, Exterior, Water Based, Gloss Level 3. MPI 161
Topcoat: Light Industrial Coating, Exterior, Water Based, Gloss Level 3. MPI 161
System DFT: (5 mils) 125 microns

Waterborne Light Industrial Coating (Semigloss)
Primer: Primer, Quick Dry, for Aluminum. MPI 95
Intermediate: Light Industrial Coating, Exterior, Water Based, Gloss Level 5. MPI 163
Topcoat: Light Industrial Coating, Exterior, Water Based, Gloss Level 5. MPI 163
System DFT: (5 mils) 125 microns

Waterborne Light Industrial Coating (Gloss)
Primer: Primer, Quick Dry, for Aluminum. MPI 95
Intermediate: Light Industrial Coating, Exterior Water Based, Gloss Level 6. MPI 164

Topcoat: Light Industrial Coating, Exterior Water Based, Gloss Level 6. MPI 164
System DFT: (5 mils) 125 microns

I. Surfaces adjacent to painted surfaces; Mechanical, Electrical, Fire extinguishing sprinkler systems including valves, conduit, hangers, supports, exposed copper piping, and miscellaneous metal items not otherwise specified except floors, hot metal surfaces, and new prefinished equipment. Match surrounding finish:

Alkyd (Flat)
Primer: Primer, Alkid, Anti-Corrosive for Metal. MPI 79
Intermediate: Alkyd, Exterior Flat, Gloss Level 1. MPI 8
Topcoat: Alkyd, Exterior Flat, Gloss Level 1. MPI 8
System DFT: (5.25 mils) 131 microns

Alkyd (Semigloss)
Primer: Primer, Alkid, Anti-Corrosive for Metal. MPI 79
Intermediate: Alkyd, Exterior, Gloss Level 5. MPI 94
Topcoat: Alkyd, Exterior, Gloss Level 5. MPI 94
System DFT: (5.25 mils) 131 microns

Alkyd (Gloss)

Primer: Primer, Alkid, Anti-Corrosive for Metal. MPI 79
Intermediate: Alkyd, Exterior, Gloss Level 6. MPI 9
Topcoat: Alkyd, Exterior, Gloss Level 6. MPI 9
System DFT: (5.25 mils) 131 microns

Waterborne Light Industrial Coating (Eggshell)
Primer: Alkyd, Exterior, Gloss Level 6. MPI 9
Intermediate: Light Industrial Coating, Exterior, Water Based, Gloss Level 3. MPI 161
Topcoat: Light Industrial Coating, Exterior, Water Based, Gloss Level 3. MPI 161
System DFT: (5 mils) 125 microns

Waterborne Light Industrial Coating (Semigloss)
Primer: Primer, Alkid, Anti-Corrosive for Metal. MPI 79
Intermediate: Light Industrial Coating, Exterior, Water Based, Gloss Level 5. MPI 163
Topcoat: Light Industrial Coating, Exterior, Water Based, Gloss Level 5. MPI 163
System DFT: (5 mils) 125 microns

Waterborne Light Industrial Coating (Gloss)
Primer: Primer, Alkid, Anti-Corrosive for Metal. MPI 79
Intermediate: Light Industrial Coating, Exterior Water Based, Gloss Level 6. MPI 164
Topcoat: Light Industrial Coating, Exterior Water Based, Gloss Level 6. MPI 164
System DFT: (5 mils) 125 microns

DIVISION 6: EXTERIOR WOOD; DRESSED LUMBER, PANELING, DECKING, SHINGLES PAINT TABLE

A. New and Existing, uncoated Dressed lumber, Wood and plywood, trim, including top, bottom and edges of doors not otherwise specified:

Alkyd (Semigloss)
Primer: Primer, Alkyd / Oil for Exterior Wood. MPI 5
Intermediate: Alkyd, Exterior, Gloss Level 5. MPI 94
Topcoat: Alkyd, Exterior, Gloss Level 5. MPI 94

System DFT: (5 mils) 125 microns

Alkyd (Gloss)
Primer: Primer, Alkyd / Oil for Exterior Wood. MPI 5
Intermediate: Alkyd, Exterior, Gloss Level 6. MPI 9
Topcoat: Alkyd, Exterior, Gloss Level 6. MPI 9
System DFT: (5 mils) 125 microns

Latex(Flat)
Primer: Primer, Alkyd / Oil for Exterior Wood. MPI 5
Intermediate: Latex, Exterior Flat, Gloss Level 1. MPI 10
Topcoat: Latex, Exterior Flat, Gloss Level 1. MPI 10
System DFT: (5 mils) 125 microns

Latex (Semigloss)
Primer: Primer, Alkyd / Oil for Exterior Wood. MPI 5
Intermediate: Latex, Exterior Flat, Gloss Level 5. MPI 11
Topcoat: Latex, Exterior Flat, Gloss Level 5. MPI 11
System DFT: (5 mils) 125 microns

Latex (Gloss)
Primer: Primer, Alkyd / Oil for Exterior Wood. MPI 5
Intermediate: Latex, Exterior Flat, Gloss Level 6. MPI 119
Topcoat: Latex, Exterior Flat, Gloss Level 6. MPI 119
System DFT: (5 mils) 125 microns

Waterborne Solid Color Stain
Primer: Primer, Alkyd / Oil for Exterior Wood. MPI 5
Intermediate: Stain, Exterior, Water Based, Solid Hide. MPI 16
Topcoat: Stain, Exterior, Water Based, Solid Hide. MPI 16
System DFT: (4.25 mils) 106 microns

B. Existing, dressed lumber, Wood and plywood, trim, including top, bottom and edges of doors previously coated with a latex / waterborne finish coat not otherwise specified:

Latex(Flat)
Spot Primer: Primer, Latex for Exterior Wood. MPI 6
Intermediate: Latex, Exterior Flat, Gloss Level 1. MPI 10
Topcoat: Latex, Exterior Flat, Gloss Level 1. MPI 10
System DFT: (4.5 mils) 112 microns

Latex (Semigloss)
Spot Primer: Primer, Latex for Exterior Wood. MPI 6
Intermediate: Latex, Exterior Flat, Gloss Level 5. MPI 11
Topcoat: Latex, Exterior Flat, Gloss Level 5. MPI 11
System DFT: (4.5 mils) 112 microns

Latex (Gloss)
Spot Primer: Primer, Latex for Exterior Wood. MPI 6
Intermediate: Latex, Exterior Flat, Gloss Level 6. MPI 119
Topcoat: Latex, Exterior Flat, Gloss Level 6. MPI 119
System DFT: (4.5 mils) 112 microns

Waterborne Solid Color Stain (Stain)
Spot Primer: Primer, Latex for Exterior Wood. MPI 6
Intermediate: Stain, Exterior, Water Based, Solid Hide. MPI 16
Topcoat: Stain, Exterior, Water Based, Solid Hide. MPI 16
System DFT: (4 mils) 100 microns

C. New, Uncoated wood siding:

Semi-Transparent Stain
Spot Primer: N/A
Intermediate: Stain, Exterior, Solvent Based, Semi – Transparent. MPI 13
Topcoat: Stain, Exterior, Solvent Based, Semi – Transparent. MPI 13
System DFT: N/A

D. Existing, previously stained wood siding:

Latex (Flat)
Primer: Primer, Alkyd / Oil for Exterior Wood. MPI 5
Intermediate: Latex, Exterior Flat, Gloss Level 1. MPI 10
Topcoat: Latex, Exterior Flat, Gloss Level 1. MPI 10
System DFT: (4.5 mils) 112 microns

Latex (Semigloss)
Primer: Primer, Alkyd / Oil for Exterior Wood. MPI 5
Intermediate: Latex, Exterior Flat, Gloss Level 5. MPI 11
Topcoat: Latex, Exterior Flat, Gloss Level 5. MPI 11
System DFT: (4.5 mils) 112 microns

E. Existing Uncoated or previously semitransparent stained wood siding:

Semi-Transparent Stain
Spot Primer: N/A
Intermediate: Stain, Exterior, Solvent Based, Semi – Transparent. MPI 13
Topcoat: Stain, Exterior, Solvent Based, Semi – Transparent. MPI 13
System DFT: Per Manufacturer

DIVISION 9: EXTERIOR STUCCO AND CEMENTITIOUS PAINT TABLE

A. New and existing stucco:

Latex New; (Flat) / Latex Existing; (Flat)
Primer: Latex, Exterior Flat, Gloss Level 1. MPI 10
Intermediate: Latex, Exterior Flat, Gloss Level 1. MPI 10
Topcoat: Latex, Exterior Flat, Gloss Level 1. MPI 10
System DFT: (4.5 mils) 112 microns

Latex New; (Semigloss) / Latex Existing; (Semigloss)
Primer: Latex, Exterior Flat, Gloss Level 5. MPI 11
Intermediate: Latex, Exterior Flat, Gloss Level 5. MPI 11
Topcoat: Latex, Exterior Flat, Gloss Level 5. MPI 11
System DFT: (4.5 mils) 112 microns

Latex New; (Gloss) / Latex Existing; (Gloss)
Primer: Latex, Exterior Flat, Gloss Level 6. MPI 119
Intermediate: Latex, Exterior Flat, Gloss Level 6. MPI 119
Topcoat: Latex, Exterior Flat, Gloss Level 6. MPI 119
System DFT: (4.5 mils) 112 microns

Primer as recommended by manufacturer. Topcoat: Coating to match adjacent surfaces. On existing stucco, apply primer based on surface condition.

3.15.2 INTERIOR PAINT TABLES

DIVISION 3: INTERIOR CONCRETE AND CEMENTITIOUS PAINT TABLE

A. New and uncoated and existing, previously painted Concrete, vertical surfaces, not specified otherwise:

Latex (Flat)
Primer: Primer Sealer, Latex, Interior. MPI 50
Intermediate: Latex, Interior, Gloss Level 2. MPI 44
Topcoat: Latex, Interior, Gloss Level 2. MPI 44
System DFT: (4 mils) 100 microns

Latex(Eggshell)
Primer: Primer Sealer, Latex, Interior. MPI 50
Intermediate: Latex, Interior, Gloss Level 3. MPI 52
Topcoat: Latex, Interior, Gloss Level 3. MPI 52

System DFT: (4 mils) 100 microns

Latex (Semigloss)
Primer: Primer Sealer, Latex, Interior. MPI 50
Intermediate: Latex, Interior, Gloss Level 5.
Topcoat: Latex, Interior, Gloss Level 5.
System DFT: (4 mils) 100 microns

B. New uncoated and existing previously painted concrete Floors:

Epoxy (Gloss)
Primer: Epoxy, Gloss. MPI 77
Intermediate: Epoxy, Gloss. MPI 77
Topcoat: Epoxy, Gloss. MPI 77
System DFT: (5 mils) 125 microns

Note: Primer may be reduced for penetration per manufacturer's instructions.

DIVISION 4: INTERIOR CONCRETE MASONRY UNITS AND CEMENTITIOUS PAINT TABLE

A. New and uncoated Existing Concrete masonry:

High Performance Architectural Latex (Flat)
Filler: Block Filler, Latex, Interior/Exterior. MPI 4
Primer: N/A
Intermediate: Latex, Interior, High Performance Architectural, Gloss Level 2. MPI 138
Topcoat: Latex, Interior, High Performance Architectural, Gloss Level 2. MPI 138
System DFT: (11 mils) 275 microns

High Performance Architectural Latex (Eggshell)
Filler: Block Filler, Latex, Interior/Exterior. MPI 4
Primer: N/A
Intermediate: Latex, Interior, High Performance Architectural, Gloss Level 3. MPI 139
Topcoat: Latex, Interior, High Performance Architectural, Gloss Level 3. MPI 139
System DFT: (11 mils) 275 microns

High Performance Architectural Latex (Satin)
Filler: Block Filler, Latex, Interior/Exterior. MPI 4
Primer: N/A
Intermediate: Latex, Interior, High Performance Architectural, Gloss Level 4. MPI 140
Topcoat: Latex, Interior, High Performance Architectural, Gloss Level 4. MPI 140
System DFT: (11 mils) 275 microns

High Performance Architectural Latex (Semigloss)
Filler: Block Filler, Latex, Interior/Exterior. MPI 4
Primer: N/A
Intermediate: Latex, Interior, High Performance Architectural, Gloss Level 5. MPI 141
Topcoat: Latex, Interior, High Performance Architectural, Gloss Level 5. MPI 141
System DFT: (11 mils) 275 microns

Fill all holes in masonry surface

B. Existing, previously painted Concrete masonry:

High Performance Architectural Latex (Flat)
Spot Primer: Latex. MPI 145
Intermediate: Latex, Interior, High Performance Architectural, Gloss Level 2. MPI 138
Topcoat: Latex, Interior, High Performance Architectural, Gloss Level 2. MPI 138

High Performance Architectural Latex (Eggshell)
Spot Primer: Primer Sealer, Latex, Interior. MPI 50
Intermediate: Latex, Interior, High Performance Architectural, Gloss Level 3. MPI 139
Topcoat: Latex, Interior, High Performance Architectural, Gloss Level 3. MPI 139
System DFT: (4.5 mils) 112 microns

High Performance Architectural Latex
Spot Primer: Primer Sealer, Latex, Interior. MPI 50
Intermediate: Latex, Interior, High Performance Arquitectural, Gloss Level 4. MPI 140
Topcoat: Latex, Interior, High Performance Arquitectural, Gloss Level 4. MPI 140
System DFT: (4.5 mils) 112 microns

High Performance Architectural Latex (Semigloss)
Spot Primer: Primer Sealer, Latex, Interior. MPI 50
Intermediate: Latex, Interior, High Performance Architectural, Gloss Level 5. MPI 141
Topcoat: Latex, Interior, High Performance Architectural, Gloss Level 5. MPI 141
System DFT: ((4.5 mils) 112 microns)

DIVISION 5: INTERIOR METAL, FERROUS AND NON-FERROUS PAINT TABLE
INTERIOR STEEL / FERROUS SURFACES

A. Metal, Mechanical, Electrical, Fire extinguishing sprinkler systems including valves, conduit, hangers, supports. Surfaces adjacent to painted surfaces (Match surrounding finish), exposed copper piping, and miscellaneous metal items not otherwise specified except floors, hot metal surfaces, and new prefinished equipment:

High Performance Architectural Latex (Flat)
Primer: Primer, Alkyd, Anti-Corrosive for Metal. MPI 79
Intermediate: Latex, Interior, High Performance Architectural, Gloss Level 2. MPI 138
Topcoat: Latex, Interior, High Performance Architectural, Gloss Level 2. MPI 138
System DFT: ((5 mils) 125 microns)

High Performance Architectural Latex (Eggshell)
Primer: Primer, Alkyd, Anti-Corrosive for Metal. MPI 79
Intermediate: Latex, Interior, High Performance Arquitectural, Gloss Level 3. MPI 139
Topcoat: Latex, Interior, High Performance Arquitectural, Gloss Level 3. MPI 139
System DFT: ((5 mils) 125 microns)

High Performance Architectural Latex (Semigloss)
Primer: Primer, Alkyd, Anti-Corrosive for Metal. MPI 79
Intermediate: Latex, Interior, High Performance Arquitectural, Gloss Level 5. MPI 141
Topcoat: Latex, Interior, High Performance Arquitectural, Gloss Level 5. MPI 141
System DFT: ((5 mils) 125 microns)

Alkyd (Flat)
Primer: Primer, Alkyd, Anti – Corrosive for metal. MPI 79
Intermediate: Alkyd, Interior, Gloss Level 1. MPI 49
Topcoat: Alkyd, Interior, Gloss Level 1. MPI 49

System DFT: ((5.25 mils) 131 microns)

Alkyd (Eggshell)
Primer: Primer, Alkyd, Anti-Corrosive for Metal. MPI 79
Intermediate: Alkyd, Interior, Gloss Level 3. MPI 51
Topcoat: Alkyd, Interior, Gloss Level 3. MPI 51
System DFT: ((5.25 mils) 131 microns)

Alkyd (Semigloss)
Primer: Primer, Alkyd, Anti-Corrosive for Metal. MPI 79
Intermediate: Alkyd, Interior, Gloss Level 5. MPI 47
Topcoat: Alkyd, Interior, Gloss Level 5. MPI 47
System DFT: ((5.25 mils) 131 microns)

Alkyd (Gloss)
Primer: Primer, Alkyd, Anti-Corrosive for Metal. MPI 79
Intermediate: Alkyd, Interior, Gloss Level 6. MPI 48
Topcoat: Alkyd, Interior, Gloss Level 6. MPI 48
System DFT: ((5.25 mils) 131 microns)

B. Ferrous metal in concealed damp spaces or in exposed areas having unpainted adjacent surfaces as follows:

Aluminum Paint
Primer: Primer, Alkyd, Anti-Corrosive for Metal. MPI 79
Intermediate: Aluminum Paint. MPI 1
Topcoat: Aluminum Paint. MPI 1
System DFT: (4.25 mils) 106 microns

C. Miscellaneous non-ferrous metal items not otherwise specified except floors, hot metal surfaces, and new prefinished equipment. Match surrounding finish:

High Performance Architectural Latex (Flat)
Primer: Primer, Quick Dry, for Aluminum. MPI 95
Intermediate: Latex, Interior, High Performance Architectural, Gloss Level 2. MPI 138
Topcoat: Latex, Interior, High Performance Architectural, Gloss Level 2. MPI 138
System DFT: ((5 mils) 125 microns)

High Performance Architectural Latex (Eggshell)
Primer: Primer, Quick Dry, for Aluminum. MPI 95
Intermediate: Latex, Interior, High Performance Arquitectural, Gloss Level 3. MPI 139
Topcoat: Latex, Interior, High Performance Arquitectural, Gloss Level 3. MPI 139
System DFT: ((5 mils) 125 microns)

High Performance Architectural Latex (Satin)
Primer: Primer, Quick Dry, for Aluminum. MPI 95
Intermediate: Latex, Interior, High Performance Arquitectural, Gloss Level 4. MPI 140
Topcoat: Latex, Interior, High Performance Arquitectural, Gloss Level 4. MPI 140
System DFT: ((5 mils) 125 microns)

High Performance Architectural Latex (Semigloss)
Primer: Primer, Quick Dry, for Aluminum. MPI 95
Intermediate: Latex, Interior, High Performance Arquitectural, Gloss Level 5. MPI 141
Topcoat: Latex, Interior, High Performance Arquitectural, Gloss

Level 5. MPI 141
System DFT: ((5 mils) 125 microns)

Alkyd (Flat)
Primer: Primer, Quick Dry, for Aluminum. MPI 95
Intermediate: Alkyd, Interior, Gloss Level 1. MPI 49
Topcoat: Alkyd, Interior, Gloss Level 1. MPI 49
System DFT: ((5 mils) 125 microns)

Alkyd (Eggshell)
Primer: Primer, Quick Dry, for Aluminum. MPI 95
Intermediate: Alkyd, Interior, Gloss Level 3. MPI 51
Topcoat: Alkyd, Interior, Gloss Level 3. MPI 51
System DFT: ((5 mils) 125 microns)

Alkyd (Semigloss)
Primer: Primer, Quick Dry, for Aluminum. MPI 95
Intermediate: Alkyd, Interior, Gloss Level 5. MPI 47
Topcoat: Alkyd, Interior, Gloss Level 5. MPI 47
System DFT: ((5 mils) 125 microns)

Alkyd (Gloss)
Primer: Primer, Quick Dry, for Aluminum. MPI 95
Intermediate: Alkyd, Interior, Gloss Level 6. MPI 48
Topcoat: Alkyd, Interior, Gloss Level 6. MPI 48
System DFT: ((5 mils) 125 microns)

DIVISION 6: INTERIOR WOOD PAINT TABLE

A. New and existing, uncoated Wood and plywood not otherwise specified:

High Performance Architectural Latex (Eggshell)
Primer: Primer Latex for Interior Wood. MPI 39
Intermediate: Latex, Interior, High Performance Arquitectural, Gloss Level 3. MPI 139
Topcoat: Latex, Interior, High Performance Arquitectural, Gloss Level 3. MPI 139
System DFT: (4.5 mils) 112 microns

High Performance Architectural Latex (Satin)
Primer: Primer Latex for Interior Wood. MPI 39
Intermediate: Latex, Interior, High Performance Arquitectural, Gloss Level 4. MPI 140
Topcoat: Latex, Interior, High Performance Arquitectural, Gloss Level 4. MPI 140
MPI 39 MPI 140 MPI 140
System DFT: (4.5 mils) 112 microns

High Performance Architectural Latex (Semigloss)
Primer: Primer Latex for Interior Wood. MPI 39
Intermediate: Latex, Interior, High Performance Arquitectural, Gloss
Level 5. MPI 141
Topcoat: Latex, Interior, High Performance Arquitectural, Gloss
Level 5. MPI 141
System DFT: (4.5 mils) 112 microns

Alkyd (Eggshell)
Primer: Primer Sealer, Alkyd, Interior. MPI 45
Intermediate: Alkyd, Interior, Gloss Level 3. MPI 51
Topcoat: Alkyd, Interior, Gloss Level 3. MPI 51

System DFT: (4.5 mils) 112 microns

Alkyd (Semigloss)
Primer: Primer Sealer, Alkyd, Interior. MPI 45
Intermediate: Alkyd, Interior, Gloss Level 5. MPI 47
Topcoat: Alkyd, Interior, Gloss Level 5. MPI 47
System DFT: (4.5 mils) 112 microns

Alkyd (Gloss)
Primer: Primer Sealer, Alkyd, Interior. MPI 45
Intermediate: Alkyd, Interior, Gloss Level 6. MPI 48
Topcoat: Alkyd, Interior, Gloss Level 6. MPI 48
System DFT: (4.5 mils) 112 microns

Institutional Low Odor / Low VOC Latex(Flat)
Primer: Primer Latex for Interior Wood. MPI 39
Intermediate: Latex, Interior, Institutional Low Odor/VOC, Gloss Level 2. MPI 144
Topcoat: Latex, Interior, Institutional Low Odor/VOC, Gloss Level 2. MPI 144
System DFT: (4 mils) 100 microns

Institutional Low Odor / Low VOC Latex (Eggshell)
Primer: Primer Latex for Interior Wood. MPI 39
Intermediate: Latex, Interior, Institutional Low Odor/VOC, Gloss Level 3. MPI 145
Topcoat: Latex, Interior, Institutional Low Odor/VOC, Gloss Level 3. MPI 145
System DFT: (4 mils) 100 microns

Institutional Low Odor / Low VOC Latex (Satin)
Primer: Primer Latex for Interior Wood. MPI 39
Intermediate: Latex, Interior, Institutional Low Odor/VOC, Gloss Level 4. MPI 146
Topcoat: Latex, Interior, Institutional Low Odor/VOC, Gloss Level 4. MPI 146
System DFT: (4 mils) 100 microns

Institutional Low Odor / Low VOC Latex (Semigloss)
Primer: Primer Latex for Interior Wood. MPI 39
Intermediate: Latex, Interior, Institutional Low Odor/VOC, Gloss Level 5. MPI 147
Topcoat: Latex, Interior, Institutional Low Odor/VOC, Gloss Level 5. MPI 147
System DFT: (4 mils) 100 microns

B. Existing, previously painted Wood and plywood not otherwise specified:

High Performance Architectural Latex (Eggshell)
Primer: Undercoat, Enamel, Interior. . MPI 46
Intermediate: Latex, Interior, High Performance Arquitectural, Gloss Level 3. MPI 139
Topcoat: Latex, Interior, High Performance Arquitectural, Gloss Level 3. MPI 139
System DFT: (4.5 mils) 1123 microns

High Performance Architectural Latex (Satin)

Primer: Undercoat, Enamel, Interior. . MPI 46
Intermediate: Latex, Interior, High Performance Arquitectural, Gloss Level 4. MPI 140
Topcoat: Latex, Interior, High Performance Arquitectural, Gloss Level 4. MPI 140
System DFT: (4.5 mils) 112 microns

High Performance Architectural Latex (Semigloss)
Primer: Undercoat, Enamel, Interior. . MPI 46
Intermediate: Latex, Interior, High Performance Arquitectural, Gloss Level 5. MPI 141
Topcoat: Latex, Interior, High Performance Arquitectural, Gloss Level 5. MPI 141
System DFT: (4.5 mils) 112 microns

Alkyd (Eggshell)
Primer: Undercoat, Enamel, Interior. . MPI 46
Intermediate: Alkyd, Interior, Gloss Level 3. MPI 51
Topcoat: Alkyd, Interior, Gloss Level 3. MPI 51
System DFT: (4.5 mils) 112 microns

Alkyd (Semigloss)
Primer: Undercoat, Enamel, Interior. . MPI 46
Intermediate: Alkyd, Interior, Gloss Level 5. MPI 47
Topcoat: Alkyd, Interior, Gloss Level 5. MPI 47
System DFT: (4.5 mils) 112 microns

Alkyd (Gloss)
Primer: Undercoat, Enamel, Interior. . MPI 46
Intermediate: Alkyd, Interior, Gloss Level 6. MPI 48
Topcoat: Alkyd, Interior, Gloss Level 6. MPI 48
System DFT: (4.5 mils) 112 microns

Institutional Low Odor / Low VOC Latex (Flat)
Primer: Primer Latex for Interior Wood. MPI 39
Intermediate: Latex, Interior, Institutional Low Odor/VOC, Gloss Level 2. MPI 144
Topcoat: Latex, Interior, Institutional Low Odor/VOC, Gloss Level 2. MPI 144
System DFT: (4 mils) 100 microns

Institutional Low Odor / Low VOC Latex (Eggshell)
Primer: Primer Latex for Interior Wood. MPI 39
Intermediate: Latex, Interior, Institutional Low Odor/VOC, Gloss Level 3. MPI 145
Topcoat: Latex, Interior, Institutional Low Odor/VOC, Gloss Level 3. MPI 145
System DFT: (4 mils) 100 microns

Institutional Low Odor / Low VOC Latex (Satin)
Primer: Primer Latex for Interior Wood. MPI 39
Intermediate: Latex, Interior, Institutional Low Odor/VOC, Gloss Level 4. MPI 146
Topcoat: Latex, Interior, Institutional Low Odor/VOC, Gloss Level 4. MPI 146
System DFT: (4 mils) 100 microns

Institutional Low Odor / Low VOC Latex (Semigloss)

Primer: Primer Latex for Interior Wood. MPI 39
Intermediate: Latex, Interior, Institutional Low Odor/VOC, Gloss Level 5. MPI 147
Topcoat: Latex, Interior, Institutional Low Odor/VOC, Gloss Level 5. MPI 147
System DFT: (4 mils) 100 microns

C. New and existing, previously finished or stained Wood and Plywood, except floors; natural finish or stained:

Natural finish, oil-modified polyurethane (Satin)
Primer: Varnish, Interior, Polyurethane, Oil Modified Satin. MPI 57
Intermediate: Varnish, Interior, Polyurethane, Oil Modified Satin. MPI 57
Topcoat: Varnish, Interior, Polyurethane, Oil Modified Satin. MPI 57
System DFT: (4 mils) 100 microns

Natural finish, oil-modified polyurethane (Gloss)
Primer: Varnish, Interior, Polyurethane, Oil Modified Gloss. MPI 56
Intermediate: Varnish, Interior, Polyurethane, Oil Modified Gloss. MPI 56
Topcoat: Varnish, Interior, Polyurethane, Oil Modified Gloss. MPI 56
System DFT: (4 mils) 100 microns

Stained, oil-modified polyurethane (Satin)
Stain: Stain, Semi-Transparent, for Interior Wood. MPI 90
Primer: Varnish, Interior, Polyurethane, Oil Modified Satin. MPI 57
Intermediate: Varnish, Interior, Polyurethane, Oil Modified Satin. MPI 57
Topcoat: Varnish, Interior, Polyurethane, Oil Modified Satin. MPI 57
System DFT: (4 mils) 100 microns

Stained, oil-modified polyurethane (Gloss)
Stain: Stain, Semi-Transparent, for Interior Wood. MPI 90
Primer: Varnish, Interior, Polyurethane, Oil Modified Gloss. MPI 56
Intermediate: Varnish, Interior, Polyurethane, Oil Modified Gloss. MPI 56
Topcoat: Varnish, Interior, Polyurethane, Oil Modified Gloss. MPI 56

Stained, Moisture Cured Urethane (Flat)
Stain: Stain, Semi-Transparent, for Interior Wood. MPI 90
Primer: Varnish Polyurethane, Moisture Cured, Gloss Level 1. MPI 71
Intermediate: Varnish Polyurethane, Moisture Cured, Gloss Level 1. MPI 71
Topcoat: Varnish Polyurethane, Moisture Cured, Gloss Level 1. MPI 71
System DFT: (4 mils) 100 microns

Stained, Moisture Cured Urethane (Gloss)
Stain: Stain, Semi-Transparent, for Interior Wood. MPI 90
Primer: Varnish Polyurethane, Moisture Cured, Gloss Level 6. MPI 31
Intermediate: Varnish Polyurethane, Moisture Cured, Gloss Level 6. MPI 31
Topcoat: Varnish Polyurethane, Moisture Cured, Gloss Level 6. MPI 31
System DFT: (4 mils) 100 microns

D. New and Existing, uncoated wood surfaces in toilets, Food - preparation, food-serving, restrooms, laundry areas, shower areas, areas requiring a high degree of sanitation, and other high humidity areas not otherwise specified.:

Waterborne Light Industrial (Semigloss)
Primer: Primer Sealer, Alkyd, Interior. MPI 45

Intermediate: Light Industrial Coating, Interior, Water Based, Gloss Level 5. MPI 153
Topcoat: Light Industrial Coating, Interior, Water Based, Gloss Level 5. MPI 153
System DFT: (4.5 mils) 112 microns

Waterborne Light Industrial (Gloss)
Primer: Primer Sealer, Alkyd, Interior. MPI 45
Intermediate: Light Industrial Coating, Interior, Water Based, Gloss Level 6. MPI 154
Topcoat: Light Industrial Coating, Interior, Water Based, Gloss Level 6. MPI 154
System DFT: (4.5 mils) 112 microns

Alkyd (Semigloss)
Primer: Primer Sealer, Alkyd, Interior. MPI 45
Intermediate: Alkyd, Interior, Gloss Level 5. MPI 47
Topcoat: Alkyd, Interior, Gloss Level 5. MPI 47
System DFT: (4.5 mils) 112 microns

Alkyd (Gloss)
Primer: Primer Sealer, Alkyd, Interior. MPI 45
Intermediate: Alkyd, Interior, Gloss Level 6. MPI 48
Topcoat: Alkyd, Interior, Gloss Level 6. MPI 48
System DFT: (4.5 mils) 112 microns

E. Existing, previously painted wood surfaces in toilets, food-preparation, Food - serving, restrooms, laundry areas, shower areas, areas requiring a high degree of sanitation, and other high humidity areas not otherwise specified:

Waterborne Light Industrial Coating (Semigloss)
Primer: Undercoat, Enamel, Interior. . MPI 46
Intermediate: Light Industrial Coating, Interior, Water Based, Gloss Level 5. MPI 153
Topcoat: Light Industrial Coating, Interior, Water Based, Gloss Level 5. MPI 153
System DFT: (4.5 mils) 112 microns

Waterborne Light Industrial Coating (Gloss)
Primer: Undercoat, Enamel, Interior. . MPI 46
Intermediate: Light Industrial Coating, Interior, Water Based, Gloss Level 6. MPI 154
Topcoat: Light Industrial Coating, Interior, Water Based, Gloss Level 6. MPI 154
System DFT: (4.5 mils) 112 microns

Alkyd (Semigloss)
Primer: Undercoat, Enamel, Interior. . MPI 46
Intermediate: Alkyd, Interior, Gloss Level 5. MPI 47
Topcoat: Alkyd, Interior, Gloss Level 5. MPI 47
System DFT: (4.5 mils) 112 microns

Alkyd (Gloss)
Primer: Undercoat, Enamel, Interior. . MPI 46
Intermediate: Alkyd, Interior, Gloss Level 6. MPI 48

Topcoat: Alkyd, Interior, Gloss Level 6. MPI 48
System DFT: (4.5 mils) 112 microns

F. New and Existing, previously finished or stained Wood Doors; Natural Finish or Stained:

Natural finish, oil-modified polyurethane (Satin)
Primer: Varnish, Interior, Polyurethane, Oil Modified Satin. MPI 57
Intermediate: Varnish, Interior, Polyurethane, Oil Modified Satin. MPI 57
Topcoat: Varnish, Interior, Polyurethane, Oil Modified Satin. MPI 57
System DFT: (4 mils) 100 microns

Natural finish, oil-modified polyurethane (Gloss)
Primer: Varnish, Interior, Polyurethane, Oil Modified Gloss. MPI 56
Intermediate: Varnish, Interior, Polyurethane, Oil Modified Gloss. MPI 56
Topcoat: Varnish, Interior, Polyurethane, Oil Modified Gloss. MPI 56
System DFT: (4 mils) 100 microns

Note: Sand between all coats per manufacturers recommendations.

Stained, oil-modified polyurethane (Satin)
Stain: Stain, Semi-Transparent, for Interior Wood. MPI 90
Primer: Varnish, Interior, Polyurethane, Oil Modified Satin. MPI 57
Intermediate: Varnish, Interior, Polyurethane, Oil Modified Satin. MPI 57
Topcoat: Varnish, Interior, Polyurethane, Oil Modified Satin. MPI 57
System DFT: (4 mils) 100 microns

Stained, oil-modified polyurethane (Gloss)
Stain: Stain, Semi-Transparent, for Interior Wood. MPI 90
Primer: Varnish, Interior, Polyurethane, Oil Modified Gloss. MPI 56
Intermediate: Varnish, Interior, Polyurethane, Oil Modified Gloss. MPI 56
Topcoat: Varnish, Interior, Polyurethane, Oil Modified Gloss. MPI 56
System DFT: (4 mils) 100 microns

Note: Sand between all coats per manufacturers recommendations.

Stained, Moisture Cured Urethane (Flat)
Stain: Stain, Semi-Transparent, for Interior Wood. MPI 90
Primer: Varnish Polyurethane, Moisture Cured, Gloss Level 1. MPI 71
Intermediate: Varnish Polyurethane, Moisture Cured, Gloss Level 1. MPI 71
Topcoat: Varnish Polyurethane, Moisture Cured, Gloss Level 1. MPI 71
System DFT: (4 mils) 100 microns

Stained, Moisture Cured Urethane (Gloss)
Stain: Stain, Semi-Transparent, for Interior Wood. MPI 90
Primer: Varnish Polyurethane, Moisture Cured, Gloss Level 6. MPI 31
Intermediate: Varnish Polyurethane, Moisture Cured, Gloss Level 6. MPI 31
Topcoat: Varnish Polyurethane, Moisture Cured, Gloss Level 6. MPI 31
System DFT: (4 mils) 100 microns

Note: Sand between all coats per manufacturers recommendations.

G. New and Existing, uncoated Wood Doors; Pigmented finish:

Alkyd (Semigloss)
Primer: Primer sealer, Alkyd, Interior. MPI 45

Intermediate: Alkyd, Interior, Gloss Level 5. MPI 47
Topcoat: Alkyd, Interior, Gloss Level 5. MPI 47
System DFT: (4.5 mils) 112 microns

Alkyd (Gloss)
Primer: Primer sealer, Alkyd, Interior. MPI 45
Intermediate: Alkyd, Interior, Gloss Level 6. MPI 48
Topcoat: Alkyd, Interior, Gloss Level 6. MPI 48
System DFT: (4.5 mils) 112 microns

Note: Sand between all coats per manufacturers recommendations.

Pigmented Polyurethane (Gloss)
Primer: Polyurethane Two-Component Pigmented, Gloss Level 6. MPI 72
Intermediate: Polyurethane Two-Component Pigmented, Gloss Level 6. MPI 72
Topcoat: Polyurethane Two-Component Pigmented, Gloss Level 6. MPI 72
System DFT: (4.5 mils) 112 microns

Note: Sand between all coats per manufacturers recommendations.

H. Existing, previously painted Wood Doors; Pigmented finish:

Alkyd (Semigloss)
Primer: Undercoat, Enamel, Interior. . MPI 46
Intermediate: Alkyd, Interior, Gloss Level 5. MPI 47
Topcoat: Alkyd, Interior, Gloss Level 5. MPI 47
System DFT: (4.5 mils) 112 microns

Alkyd (Gloss)
Primer: Undercoat, Enamel, Interior. . MPI 46
Intermediate: Alkyd, Interior, Gloss Level 6. MPI 48
Topcoat: Alkyd, Interior, Gloss Level 6. MPI 48
System DFT: (4.5 mils) 112 microns

Note: Sand between all coats per manufacturers recommendations.

DIVISION 9: INTERIOR PLASTER, GYPSUM BOARD, TEXTURED SURFACES AND CEMENTITIOUS PAINT TABLE

A. New and Existing, previously painted Plaster and Wallboard not otherwise specified:

Latex (Flat)
Primer: Primer Sealer, Latex, Interior. MPI 50
Intermediate: Latex, Interior, Gloss Level 2. MPI 44
Topcoat: Latex, Interior, Gloss Level 2. MPI 44
System DFT: (4 mils) 100 microns

Latex (Eggshell)
Primer: Primer Sealer, Latex, Interior. MPI 50
Intermediate: Latex, Interior, Gloss Level 3. MPI 52
Topcoat: Latex, Interior, Gloss Level 3. MPI 52
System DFT: (4 mils) 100 microns

Latex (Semigloss)
Primer: Primer Sealer, Latex, Interior. MPI 50

Intermediate: Latex, Interior, Gloss Level 5. MPI 54
Topcoat: Latex, Interior, Gloss Level 5. MPI 54
System DFT: (4 mils) 100 microns

High Performance Architectural Latex - High Traffic Areas
Primer: Primer Sealer, Latex, Interior. MPI 50
Intermediate: Latex, Interior, High Performance Architectural, Gloss Level 2. MPI 138
Topcoat: Latex, Interior, High Performance Architectural, Gloss Level 2. MPI 138

High Performance Architectural Latex - High Traffic Areas (Eggshell)
Primer: Primer Sealer, Latex, Interior. MPI 50
Intermediate: Latex, Interior, High Performance Arquitectural, Gloss Level 3. MPI 139
Topcoat: Latex, Interior, High Performance Arquitectural, Gloss Level 3. MPI 139
System DFT: (4 mils) 100 microns

High Performance Architectural Latex - High Traffic Areas (Semigloss)
Primer: Primer Sealer, Latex, Interior. MPI 50
Intermediate: Latex, Interior, High Performance Arquitectural, Gloss Level 5. MPI 141
Topcoat: Latex, Interior, High Performance Arquitectural, Gloss Level 5. MPI 141
System DFT: (4 mils) 100 microns

Institutional Low Odor / Low VOC Latex (Flat)
Primer: Primer Sealer, Latex, Interior. MPI 50
Intermediate: Latex, Interior, Institutional Low Odor/VOC, Gloss Level 2. MPI 144
Topcoat: Latex, Interior, Institutional Low Odor/VOC, Gloss Level 2. MPI 144
System DFT: (4 mils) 100 microns

Institutional Low Odor / Low VOC Latex (Eggshell)
Primer: Primer Sealer, Latex, Interior. MPI 50
Intermediate: Latex, Interior, Institutional Low Odor/VOC, Gloss Level 3. MPI 145
Topcoat: Latex, Interior, Institutional Low Odor/VOC, Gloss Level 3. MPI 145
System DFT: (4 mils) 100 microns

Institutional Low Odor / Low VOC Latex (Satin)
Primer: Primer Sealer, Latex, Interior. MPI 50
Intermediate: Latex, Interior, Institutional Low Odor/VOC, Gloss Level 4. MPI 146
Topcoat: Latex, Interior, Institutional Low Odor/VOC, Gloss Level 4. MPI 146
System DFT: (4 mils) 100 microns

Institutional Low Odor / Low VOC Latex (Semigloss)
Primer: Primer Sealer, Latex, Interior. MPI 50
Intermediate: Latex, Interior, Institutional Low Odor/VOC, Gloss Level 5. MPI 147
Topcoat: Latex, Interior, Institutional Low Odor/VOC, Gloss Level 5. MPI 147
System DFT: (4 mils) 100 microns

B. New and Existing, previously painted Plaster and wallboard in

toilets, food-preparation, food-serving, restrooms, laundry areas, shower areas, areas requiring a high degree of sanitation, and other high humidity areas not otherwise specified.:

Waterborne Light Industrial Coating (Semigloss)
Primer: Primer Sealer, Latex, Interior. MPI 50
Intermediate: Light Industrial Coating, Interior, Water Based, Gloss Level 5. MPI 153
Topcoat: Light Industrial Coating, Interior, Water Based, Gloss Level 5. MPI 153
System DFT: (4 mils) 100 microns

Alkyd (Semigloss)
Primer: Primer Sealer, Latex, Interior. MPI 50
Intermediate: Alkyd, Interior, Gloss Level 5. MPI 47
Topcoat: Alkyd, Interior, Gloss Level 5. MPI 47
System DFT: (4 mils) 100 microns

Epoxy (Gloss)
Primer: Primer Sealer, Latex, Interior. MPI 50
Intermediate: Epoxy, Gloss. MPI 77
Topcoat: Epoxy, Gloss. MPI 77
System DFT: (4 mils) 100 microns

-- End of Section --

SECTION 31 00 00

EARTHWORK

PART I - GENERAL

1.1 REFERENCES: The publications listed below form a part of this specification to the extent referenced. The publications are referred to in the text by the basic designation only. The latest edition of the referenced publications shall govern.

1.1.1 CENTRO DE PUBLICACIONES DEL MINISTERIO DE FOMENTO(MF):

PG-3, Parts. 3-4	Pliego de Prescripciones Tecnicas Generales para Obras de Carreteras y Puentes.

1.1.2 AENOR – UNA NORMA ESPAŇOLA (UNE)

UNE 1367-2	Tests for Thermal and Weathering Properties of Aggregates Part 2: Magnesium Sulfate Test.
UNE 103101	Particle Size Analysis of a Soil by Screening
UNE 103103	Determination of the Liquid Limit of a Soil by the Casagrande Apparatus Method.
UNE 103104	Test for Plastic Limit of a Soil.
UNE 103501	Geotechnical. Compaction Test. Modified Proctor.
UNE 103503	Determination “In-Situ” of Density of Soil by Sand Method.
UNE-EN 13137	Characterization of Waste determination of Total Organic Carbon (TOC) in Waste, Sludge and Sediments.
UNE 77319	Soil Quality. Determination of polynuclear Aromatic hydrocarbons. Method using High-performance Liquid Chromatography.
UNE 103300	Determination of Moisture Content of Soil by Means Oven-Dried.

1.1.4 AMERICAN SOCIETY FOR TESTING AND MATERIALS (ASTM))

ASTM D 2487	Classification of Soils for Engineering Purposes (Unified Soil Classification System)
ASTM D 2922	Density of Soil and Soil-Aggregate in Place by Nuclear Methods (Shallow Depth)
ASTM D 1557	Moisture Density Relations of Soils and Soil-Aggregate Mixtures Using 10-lb (4.54-kg) Rammer and 18-in. (457-mm) Drop
ASTM D 3017	Water Content of Soil and Rock in Place by Nuclear Methods (Shallow Depth)

1.1.5 CORPS OF ENGINEERS (COE):

COE EM-385-1-1	Safety and Health Requirements Manual

1.1.6 JEFATURA DEL ESTADO, MADRID. SPAIN

LEY 31/1995	Ley de Prevencion de Riesgos Laborales.

1.1.7 MINISTERIO DE LA PRESIDENCIA, MADRID, SPAIN

RD-1627/97	Disposiciones Minimas de Seguridad y de Salud en las Obras de la Construccion.

1.2 DEFINITIONS:

1.2.1 Backfill: A specified material used in refilling a cut, trench, or other excavation, placed at a specified degree of compaction.

1.2.2 Capillary Water Barrier: A layer of clean, poorly graded crushed rock, stone, or natural sand or gravel having a high porosity which is placed beneath a building slab with or without a vapor barrier to cut off the capillary flow of pore water to the area immediately below a slab.

1.2.3 Cohesive Materials: Cohesive materials include materials classified by ASTM D 2487 as GC, SC, ML, CL, MH, and CH. Materials classified as GM and SM will be identified as cohesive only when the fines have a plasticity index greater than zero.

1.2.4 Cohesionless Materials: Cohesionless materials include materials classified by ASTM D 2487 as GW, GP, SW, and SP. Materials classified as GM and SM will be identified as cohesionless only when the fines have a plasticity index of zero.

1.2.5 Compaction: The process of mechanically stabilizing a material by increasing its density at a controlled moisture condition. "Degree of Compaction" is expressed as a percentage of the maximum density obtained by the test procedure described described in UNE 103501 or ASTM D 1557 for general soil types.

1.2.6 Controlled Fill and Controlled Backfill: A specified soil mix or gradation of materials constructed to attain maximum bearing strength and minimize consolidation or differential settlement under a load. Controlled fill is sometimes called "structural fill".

1.2.7 Embankment: A "fill" having a top that is higher than adjoining ground.

1.2.8 Excavation: The removal of soil, rock, or hard material to obtain a specified depth or elevation.

1.2.9 Fill: Specified material placed at a specified degree of compaction to obtain an indicated grade or elevation.

1.2.10 Hard Material: Weathered rock, dense consolidated deposits or conglomerate materials, (excluding manmade materials such as concrete) which are not included in the definition of "rock" but which usually require the use of heavy excavation equipment with ripper teeth or the use of jack hammers for removal.

1.2.11 In Situ Soil: Existing in place soil.

1.2.12 Lift: A layer (or course) of soil placed on top of a previously prepared or placed soil.

1.2.13 Rock: Solid, homogeneous, interlocking crystalline material with firmly cemented, laminated, or foliated masses or conglomerate deposits, neither of which can be removed without systematic drilling and blasting, drilling and the use of expansion jacks or feather wedges, or the use of backhoe-mounted pneumatic hole punchers or rock breakers; also large boulders, buried masonry, or concrete other than pavement, exceeding 1 cubic meter in volume. Removal of "hard material" will not be considered rock excavation because of production.

1.2.14 Soil: The surface material of the earth's crust resulting from the chemical and mechanical weathering of rock and organic material.

1.2.15 Subgrade: The material in excavation (cuts) and fills (embankments) immediately below any subbase, base, pavement, or other improvement. Also, as a secondary definition, the level below which work above is referenced.

1.2.16 Topsoil: In natural or undisturbed soil formations, the fine-grained, weathered material on the surface or directly below any loose or partially decomposed organic matter. Topsoil may be a dark-colored, fine, silty, or sandy material with a high content of well decomposed organic matter, often containing traces of the parent rock material. Gradation and material requirements specified herein apply to all topsoil references in this contract. The material shall be representative of productive soils in the vicinity.

1.2.17 Unsatisfactory Material: Existing, in situ soil or other material which can be identified as having insufficient strength characteristics or stability to carry intended loads in fill or embankment without excessive consolidation or loss of stability. Materials classified as PT, OH, or OL by ASTM D 2487 are unsatisfactory. Unsatisfactory materials also include man-made fills, refuse, frozen material, uncompacted backfills from previous construction, unsound rock or soil lenses, or other deleterious or objectionable material.

1.2.18 Working Platform: A layer of compacted crushed rock or natural stone that replaces the in situ soil to provide a stable, uniform bearing foundation for construction equipment to facilitate further site construction.

1.3 SUBMITTALS: Submit the following in accordance with Section 01 33 00, titled "SUBMITTALS PROCEDURES".

1.3.1 Statements:

a. Shoring and sheeting plan
b. Dewatering system

1.3.1.1 Shoring and Sheeting Plan: Describe materials or shoring system to be used. Indicate whether or not any components will remain after filling or backfilling. Provide plans, sketches, or details along with calculations by a registered professional engineer. Indicate sequence and method for installation and removal.

1.3.1.2 Dewatering System: Describe methods to be employed in removing water from exposed surfaces and diverting surface water from other areas or structures. Describe the basic components of the dewatering system proposed and its planned method of operation.

1.3.2 Field Test Reports: Provide field inspection and test reports for the following:

a. Controlled fill and Controlled backfill material tests.
b. Topsoil tests

1.4 DELIVERY AND STORAGE: Deliver and store materials in a manner to prevent contamination or segregation. Store synthetic fiber filter cloth to prevent exposure to direct sunlight in accordance with the manufacturer's recommendations.

1.5 SITE CONDITIONS:

1.5.1 Dewatering Plan: Base on site surface and subsurface conditions and available soils and hydrological data.

1.5.2 Utilities: Contact the Contracting Officer 72 hours prior to construction for the location of all existing underground utilities. Movement of construction machinery and equipment over pipes and utilities during construction shall be at the Contractor's risk. Contact the utility Public Works Department for location(s) of utilities. Perform work adjacent to privately owned utilities in accordance with procedures outlined by the utility company. Excavation made with power-driven equipment is not permitted within 60 cm (2 ft) of known Government-owned utility or subsurface construction. For work immediately adjacent to or for excavations exposing a utility or other buried obstruction, excavate by hand. Start hand excavation on each side of the indicated obstruction and continue until the obstruction is uncovered or until clearance for the new grade is assured. Support uncovered lines or other existing work as affected by the contract excavation until approval for backfill is granted by the Contracting Officer. Report damage to utility lines or subsurface construction immediately to the Contracting Officer.

PART II - PRODUCTS

2.1 MATERIALS:

2.1.1 Soil Materials: Provide materials free from debris, roots, wood, scrap materials, vegetable matter, refuse or frozen material. Maximum particle size permitted is 7.5 cm (3 in). Use excavated material from the site for the work indicated when material falls within the requirements specified herein.

2.1.1.1 Controlled Fill and Controlled Backfill: Provide materials classified as GW, GP, SW, SP, by ASTM D 2487 where indicated. The liquid limit of such material shall not exceed 35 percent when tested in accordance with ASTM D 4318. The plasticity index shall not be greater than 12 percent when tested in accordance with ASTM D 4318, and not more than 35 percent by weight shall be finer than No. 200 sieve when tested in accordance with ASTM D 1140. Coefficient of permeability shall be a minimum of 0.002 feet per minute when tested in accordance with ASTM D 2434.

2.1.1.2 General Backfill Beside Structures: Soft, spongy, highly plastic, or otherwise unstable material is prohibited. Material shall be unclassified but shall contain sufficient fines to ensure proper compaction. Material shall be classified as GP, GM, GC, SP, or SM by ASTM D 2487. If more material is required than is available from on-site excavation, then provide that material from approved sources.

2.1.1.3 General Site Fill, Backfill and Embankment Material: Provide a soil material from the site or borrow that can be readily compacted to the specified densities. Materials shall be classified as GP, GM, GC, SP, or SM by ASTM D 2487.

2.1.1.4 Working Platform: Material and thicknesses of working platform for support of construction equipment shall be at the discretion of the construction contractor. The gradation and placement of such material shall not create large void spaces upon which overlying work is indicated to be placed.

2.1.1.5 Topsoil: Prior to spreading, test the topsoil, and add the necessary soil modifiers to bring the material within the ranges specified in Table II. Provide additional topsoil meeting the requirement described in Table II if stockpiled material is not sufficient to complete all indicated work. Provide material free of subsoil, stumps, rocks larger than 2 cm (3/4 in) diameter (with maximum 3 percent retained on 0.6 cm (1/4 in) screen), brush, weeds, toxic substances, and other material or substance detrimental to plant growth. Topsoil shall be a natural, friable soil representative of productive soils in the vicinity. Modify topsoil provided if necessary conform with the requirements specified in Table II.

TABLE II

DOA SSIR Laboratory Test for:	**Acceptable Limits**
Sand Content	20 - 45 percent by weight

Silt Content	25 - 50 percent by weight
Clay Content	10 - 30 percent by weight
Organic Material (Walkley-Block)	5 percent minimum
pH	5.0 to 7.6
Soluble Salts	600 ppm maximum
Absorption Rate minimum	1.3 cm (0.5 inch) per hour

2.1.1.6 Borrow: Provide materials meeting requirements for general site fill, general backfill, controlled backfill, granular fill, and topsoil. Obtain borrow materials in excess of those furnished from excavations described herein from sources off Government property.

PART III - EXECUTION

3.1 PROTECTION:

3.1.1 Shoring and Sheeting: Provide shoring, bracing, cribbing, underpinning, and/or sheeting where required. In addition to Section XXIII A and B of COE EM-385-1-1, and other requirements of this contract meet the following:

a. Prevent undermining of pavements, and foundations.

b. Slope banks where space permits.

c. Where shoring and sheeting materials remain in place in completed work to prevent settlements or damage to adjacent structures or as directed, backfill the excavation to 100 cm (3 ft) below the finished grade and remove the remaining exposed portion of the shoring before completing the backfill.

3.1.2 Dewatering: Dispose of surface water which may accumulate in open excavations, unfinished fills, or other low areas. Remove water by trenching where approved, pumping, or other methods to prevent softening of exposed surfaces. Surface dewatering plan shall include rerouting of any storm water runoff or natural drainage if necessary and shall comply with requirements specified in Section 01 57 20.00 10 titled "ENVIRONMENTAL PROTECTION".

3.1.3 Water Removal: Remove water by pumping or other methods to prevent the softening of surfaces exposed by excavation. Before excavating below ground water level, place the dewatering system into operation. Lower the water levels at least 30 cm (1 ft) below the bottom and side slopes of the excavation.

3.1.4 Operation and Performance: Operate the dewatering system continuously, until construction work below existing water levels is complete.

3.1.5 Protection and Restoration of Surfaces: Protect newly graded areas from traffic, erosion, and settlements. Repair and reestablish damaged or eroded slopes, elevations or grades and restore surface construction prior to acceptance. Protect existing streams, ditches and storm drain inlets from water-borne soil by means of straw bale dikes or filter fabric dams as required. Conduct work in accordance with requirements specified in Section 01 57 19.00 20 titled "TEMPORARY ENVIRONMENTAL CONTROLS".

3.1.5.1 Disposal of Excavated Material: Dispose of excavated material in such a manner that it will not obstruct the flow of runoff, streams, endanger a partly finished structure, impair the efficiency or appearance of facilities, or be detrimental to the completed work.

3.1.5.2 Stockpile Rock: Stockpile rock from on site excavations and use to construct slopes or embankments adjacent to streams, or side and bottoms of channels (rip-rap) and for protection against erosion. Remove excess stockpiled rock upon completion of construction.

3.2 SURFACE PREPARATION:

3.2.1 Clearing and Grubbing: Unless indicated otherwise, remove trees, logs, stumps, shrubs, and brush within the indicated limits of construction. Protect from damage trees and shrubs which are to be saved or which are outside the limits of construction. Protect trees which are to be saved during construction by wooden enclosures or wire fences located at or outside of the tree drip lines. Do not permit traffic, parking of equipment, and storage of material within the tree drip lines. Except where area is indicated "Clearing Only", grub out matted roots and roots over 5 cm (2 inches) in diameter to at least 46 cm (18 in) below the existing surface. Merchantable timber shall be cut into logs and stored on the site as directed. Brush, refuse, stumps, roots, and unmerchantable timber shall become the property of the Contractor and removed from the Government property. Conduct work in accordance with requirements specified in Section 01 57 19.00 20, titled "TEMPORARY ENVIRONMENTAL CONTROLS".

3.2.2 Stockpiling Topsoil: Strip approved topsoil from the site where excavation or grading is indicated and stockpile separately from other excavated material. Locate topsoil so that the material can be used readily for the finished grading. Protect and store in segregated piles until needed.

3.2.3 Unsatisfactory Material: Remove unsuitable soils under embankments which are less than 100 cm (3 ft) in thickness and under pavements or slabs on grade. Typical depth of removal of such unsuitable material shall be as indicated.

3.2.3.1 Subgrade Proof Rolling: After removal of topsoil or other overburden, proof roll the existing subgrade with six passes of a minimum 15 ton pneumatic-tired roller. Operate the roller in a systematic manner to assure the number of passes over all areas, and at speeds between 4 and 5.5 Km/hr(2.5 and 3.5 m/hr). Proof rolling shall be done in the presence of the Contracting Officer. Rutting or pumping shall indicate unsatisfactory material and that material shall be undercut as directed by the Contracting Officer and replaced with the appropriate fill material. Perform proof rolling only when weather conditions permit. Do not proof roll wet or saturated subgrades. Materials degraded by proof rolling a wet or saturated subgrade shall be replaced by the Contractor as directed by the Contracting Officer at no cost to the Government. Notify the Contracting Officer 3 days prior to proof rolling.

3.3 EXCAVATION: Excavate to contours and dimensions indicated. Keep excavations free from water while construction is in progress. Notify the Contracting Officer immediately in writing in the event that it becomes necessary to remove rock, hard material, or other material defined as unsatisfactory to a depth greater than indicated and an adjustment in contract price will be considered in accordance with the Contract clause entitled "Differing Site Conditions." Refill excavations cut below the depths indicated with controlled fill and compact as specified herein. Excavate soil disturbed or weakened by construction operations or soils soften from exposure to weather. Refill with controlled fill and compact as specified herein.

3.3.1 Subsurface Drain Trenches: Excavate in accordance with lines, grades, and sections indicated.

3.3.2 Shoring and Sheeting: Shore and sheet excavations as described in the submitted plan, with various members sized and arranged to prevent injury to persons and damage to structures. Also arrange shoring and sheeting to preclude injurious caving during removal.

3.4 BORROW MATERIALS: Select borrow materials to meet requirements and conditions of the particular fill or backfill material(s) to be used. Obtain borrow materials from sources off of Government property.

3.5 FILLING AND BACKFILLING:

3.5.1 Subgrade Preparation: Scarify the underlying subgrade surface to a depth of 15 cm (6 in) before the fill is started. Step, bench, or break up sloped surfaces steeper than one vertical to four horizontal so that the fill material will bond with or be securely keyed to the existing material. Scarify existing surface to a minimum depth of 15 cm (6 in) if subgrade density is less than the degree of compaction specified and recompact. When the subgrade is part fill and part excavation or natural ground, scarify the excavated or natural ground portion to a depth of 30 cm (12 in) and recompact as specified for the adjacent or overlying fill. Compact with equipment well suited to the soil being compacted. Moisten or aerate material as necessary to provide the moisture content that will readily facilitate obtaining the specified compaction with the equipment used.

3.5.2 Fill and Backfill Beside Structures: Place required backfill material adjacent to structures and compact in a manner that prevents wedging action or eccentric loading upon or against the structures. Step or serrate slopes bounding or within

areas to be backfilled to prevent sliding of the fill. Moisten or aerate material as necessary to provide the moisture content that will readily facilitate obtaining the specified compaction with the equipment used. Do not place material on surfaces that are muddy, frozen, or contain frost. Do not use equipment for backfilling operations or for the formation of embankments against structures that will overload the structure. Backfilling against concrete will be done only after approval has been obtained from the Contracting Officer.

3.5.3 Controlled Fill and Controlled Backfill: Place controlled fill and controlled backfill in loose lifts of 6 inches. Do not place material on surfaces that are muddy, frozen, or contain frost. Compact with equipment well suited to the soil being compacted. Moisten or aerate material as necessary to provide the moisture content that will readily facilitate obtaining the specified compaction with the equipment used. Compact each lift as specified herein before placing the overlaying lift. Compaction shall be accomplished continuously over the entire area. Sufficient passes shall be made to ensure that specified density is obtained.

3.5.4 General Fill, and General Backfill: Construct fill and backfill at the locations and to lines and grades indicated. Use only approved materials in constructing fill on the prepared subgrade. Place satisfactory material in horizontal lifts not exceeding 15 cm (6 in) in loose depth. Do not place material on surfaces that are muddy, frozen, or contain frost. Compact with equipment well suited to the soil being compacted. Moisten or aerate material as necessary to provide the moisture content that will readily facilitate obtaining the specified compaction with the equipment used. Compact each lift as specified before placing the overlaying lift.

3.5.5 Final Backfill for Utilities: Construct backfill (final backfill) for storm drains, manholes, utility lines, and other utility appurtenances using the material and compaction requirements specified herein for the adjacent or overlying work. Backfilling against concrete will be done only after approval has been obtained from the Contracting Officer.

3.5.6 Weather Limitations: Fill and backfill shall not be constructed when weather conditions detrimentally affect the quality of the finished course. Place fill and backfill only if the atmospheric temperature is above freezing in the shade and is rising. Do not construct fill and backfill in the rain or on saturated subgrades. If weather conditions are windy, hot or arid, with high rate of evaporation, schedule the placement in cooler portions of the day and furnish equipment to add moisture to the fill or backfill during and after placement.

3.6 BORROW: Strip the top 30.5 cm (12 in) of soil material from designated borrow area and stockpile. After removal of the borrow material and depositing of any approved waste soil material, regrade the borrow pit using stockpiled soil materials. Shape surface to contours which provide positive drainage and which will blend in with the adjacent topography. Maximum side slopes shall be two horizontal to one vertical.

3.7 COMPACTION: Compact each layer or lift of material specified so that the in-place density tested is not less than the percentage of maximum density specified in Table III.

TABLE III

	Percent ASTM D 1557 Maximum Density	
	Cohesive Material	Cohesionless Material
Fill, Embankment and Backfill	90	95
General Fill and General Backfill under steps and parking lots:	90	95
General Fill and General Backfill under sidewalks and grassed areas:	85	90
General Backfill and General Fill beside structures:	90	95

Controlled fill and Controlled backfill under footings, pavements and structures:	95	100
Refill and undercut materials	N/A	100
Under Roadways, top 30.5 cm (12 in)	95	100
Subgrade (Top of fill, backfill or cut) Under parking lots, top 30.5 (12 in)	93	98
Under grass areas, top 16 cm (6 in)	85	90

3.8 FINISH OPERATIONS

3.8.1 Site Grading: Grade to finished grades indicated within 0.10 foot. Grade areas to drain water away from structures and to provide suitable surfaces for mowing machines. Existing grades which are to remain but are disturbed by the Contractor's operations shall be restored (as specified herein).

3.8.2 Finishing Subgrades Under Structures and Pavements: Finish surface of top lift of fill or top of subgrade to the elevation and cross section indicated. Finished surface shall be smooth and of uniform texture. Lightly scarify or blade the finished surface to bring the finished surface to within 1.5 cm (0.05 ft) of the indicated grade and to eliminate imprints made by compaction and shaping equipment. Surface shall show no deviations in excess of 1 cm (3/8 in) when tested with a 3 meters (10 ft) straightedge.

3.8.3 Spreading Topsoil: Clear areas indicated or specified to receive topsoil of materials interfering with planting and maintenance operations. Do not place topsoil when subgrade is frozen, extremely wet or dry, or in other conditions detrimental to seeding, planting, or grading. Spread topsoil to a uniform depth of 10 cm (4 in) over the designated area.

3.8.4 Disposition of Surplus Material: Surplus or other soil material not required or suitable for filling, backfilling, or embankment shall be wasted by disposition in the area indicated by the Contracting Officer or removed from the work site and disposed of in the sanitary landfill. Material wasted by disposition in the area shall be spread and leveled to grade and elevations as directed. Comply with the requirements of Section 01 57 20.00 10, titled "ENVIRONMENTAL PROTECTION".

3.8.5 Protection of Surfaces: Protect newly graded areas from traffic, erosion, and settlements that may occur and as required in the Section 01 57 20.00 10, titled "ENVIRONMENTAL PROTECTION" and as specified in the paragraph entitled "Protection and Restoration of Surfaces." Repair or reestablish damaged grades, elevations, or slopes prior to acceptance of work.

3.9 FIELD QUALITY CONTROL:

3.9.1 Sampling: Take the number and size of samples required to perform the following tests.

3.9.2 Testing: Perform one of each of the following tests for each material used. Provide additional tests for each source change.

3.9.2.1 Fill and Backfill Material Testing: Test fill and backfill material in accordance with ASTM C 136 for conformance to ASTM D 2487 gradation limits; ASTM D 1140 for material finer than the No. 200 sieve; ASTM D 4318 for liquid limit and for plastic limit; ASTM D 698 or ASTM D 1557 for moisture density relations, as applicable.

3.9.2.2 Select Material Testing: Test select material in accordance with ASTM C 136 for conformance to ASTM D 2487 gradation limits; ASTM D 1140 for material finer than the No. 200 sieve; ASTM D 698 or ASTM D 1557 for moisture density relations, as applicable.

3.9.2.3 Porous Fill Testing: Test porous fill in accordance with ASTM C 136 for conformance to gradation specified in ASTM C 33.

3.9.2.4 Density Tests: Test density in accordance with ASTM D 1556, or ASTM D 2922 and ASTM D 3017. When ASTM D 2922 and ASTM D 3017 density tests are used, verify density test results by performing an ASTM D 1556 density test at a location already ASTM D 2922 and ASTM D 3017 tested as specified herein. Perform an ASTM D 1556 density test at the start of the job, and for every 10 ASTM D 2922 and ASTM D 3017 density tests thereafter. Test each lift at randomly selected locations of existing grade in fills for structures, concrete slabs and other fill areas.

***** END OF SECTION *****

SECTION 31 23 00.00 20

EXCAVATION AND FILL

PART I - GENERAL

1.1 REFERENCES: The publications listed below form a part of this specification to the extent referenced. The publications are referred to in the text by the basic designation only. The latest edition of the referenced publications shall govern.

1.1.1 CENTRO DE PUBLICACIONES DEL MINISTERIO DE FOMENTO

PG-3, Arts. 290, 320-322, 422	Pliego de Prescripciones Tecnicas Generales para Obras de Carreteras y Puentes. Geotextiles and Excavaciones.

1.1.1 CENTRO DE ESTUDIOS Y EXPERIMENTACION DE OBRAS PUBLICAS (CEDEX))

NLT 311	Densidad Maxima y Humedad Optima de Compactacion Mediante Martillo Vibrador de Materiales Granulares con o sin Productos de Adicion

1.1.2 AENOR – UNA NORMA ESPAŇOLA (UNE)

UNE 1367-2	Tests for Thermal and Weathering Properties of Aggregates Part 2: Magnesium Sulfate Test.
UNE 103101	Particle Size Analysis of a Soil by Screening
UNE 103103	Determination of the Liquid Limit of a Soil by the Casagrande Apparatus Method.
UNE 103104	Test for Plastic Limit of a Soil.
UNE 103501	Geotechnical. Compaction Test. Modified Proctor.
UNE 103503	Determination “In-Situ” of Density of Soil by Sand Method.
UNE-EN 13137	Characterization of Waste determination of Total Organic Carbon (TOC) in Waste, Sludge and Sediments.
UNE 77319	Soil Quality. Determination of polynuclear Aromatic hydrocarbons. Method using High-performance Liquid Chromatography.
UNE 103300	Determination of Moisture Content of Soil by Means Oven-Dried.
UNE 40529	Textiles. Industrial Uses. Tests For Geotextiles.Determination Of Tear Resistance (After Initial Tear)
UNE-EN 963	Geotextiles And Geotextile-Related Products. Sampling And Preparation Of Test Specimens.
UNE-EN ISO 12236	Geosynthetics - Static puncture test (CBR test).
UNE-EN 964-1	Geotextiles and Geotextile-Related Products. Determination Of Thickness At Specified Pressures. Part 1: Single Layers

UNE-EN 30320	Geotextiles. Identification on Site. (Iso 10320:1991).
UNE-EN 12224	Geotextiles And Geotextile-Related Products - Determination Of The Resistance To Weathering.
UNE-EN 14151	Geosynthetics - Determination of burst strength.
UNE-EN ISO 12236	Geosynthetics - Static puncture test (CBR test) (ISO 12236:2006)
UNE-EN ISO 12956	Geotextiles and geotextile-related products - Determination of the characteristic opening size (ISO 12956:2010)
UNE 40529	Textiles. Industrial Uses. Tests For Geotextiles. Determination Of Tear Resistance

1.1.3 AMERICAN SOCIETY FOR TESTING AND MATERIALS (ASTM))

ASTM D 2487	Classification of Soils for Engineering Purposes (Unified Soil Classification System)
ASTM D 2922	Density of Soil and Soil-Aggregate in Place by Nuclear Methods (Shallow Depth)
ASTM D 1557	Moisture Density Relations of Soils and Soil-Aggregate Mixtures Using 10-lb (4.54-kg) Rammer and 18-in. (457-mm) Drop
ASTM D 3017	Water Content of Soil and Rock in Place by Nuclear Methods (Shallow Depth)
ASTM D 4632	Breaking Load and Elongation of Geotextiles (Grab Method)
ASTM D 4759	Determining the Specification Conformance of Geosynthetics

1.1.4 CORPS OF ENGINEERS (COE)

COE EM-385-1-1	Safety and Health Requirements Manual

1.1.6 JEFATURA DEL ESTADO, MADRID. SPAIN

LEY 31/1995	Ley de Prevencion de Riesgos Laborales.

1.1.7 MINISTERIO DE LA PRESIDENCIA, MADRID, SPAIN

RD-1627/97	Disposiciones Minimas de Seguridad y de Salud en las Obras de la Construccion.

1.2 DEFINITIONS

1.2.1 Backfill: Material used in refilling a cut, trench or other excavation.

1.2.2 Cohesive Materials: Soils classified by ASTM D 2487 as GC, SC, ML, CL, MH, and CH. Materials classified as GM and SM will be identified as cohesive only when fines have a plasticity index greater than zero.

1.2.3 Cohesionless Materials: Soils classified by ASTM D 2487 as GW, GP, SW, and SP. Materials classified as GM and SM will be identified as cohesionless only when the fines have a plasticity index of zero.

1.2.4 Compaction: The process of mechanically stabilizing a material by increasing its density at a controlled moisture condition. "Degree of Compaction" is expressed as a percentage of the maximum density obtained by the test procedure described in UNE 103501."

1.2.5 Degree of Compaction: Degree of compaction is a percentage of the maximum density obtained by the test procedure presented in UNE 103501, abbreviated as a percent of laboratory maximum density.

1.2.6 Required Compaction and Moisture Content: The required degree of compaction for cohesive materials is 95 percent of maximum density as determined by UNE 103501 unless otherwise stated within this specification or on the drawings. The required moisture content at time and location of compaction shall be uniform throughout the material and within plus 2 and minus 1 percent of optimum moisture as determined by UNE 103501.

The required degree of compaction for cohesionless materials is 75 percent of the relative density as determined by NLT 310 and NLT 311. The required moisture at time and location of compaction shall be uniform throughout the material. Water shall be added to the stockpile or the borrow area and adjusted, if necessary, in each layer. Brine water, brackish ground water, sea water, sewer effluent, or otherwise unsatisfactory water is not permitted.

1.2.7 Hard Material: Weathered rock, dense consolidated deposits, or conglomerate materials (excluding man made materials such as concrete) which are not included in the definition of "rock" but which usually require the use of heavy excavation equipment, ripper teeth, or jack hammers for removal.

1.2.8 In-Situ Soil: Existing in place soil.

1.2.9 Lift: A layer (or course) of soil placed on top of sub grade or a previously prepared or placed soil in a fill or backfill.

1.2.10 Porous Fill: A granular soil material having a large void ratio when placed and compacted, allowing a free flow of fluid to or from the surrounding soil, with no more than 10% of the material passing the 1.3 cm (1/2 in) Sieve.

1.2.11 Refill: Material placed in excavation to correct overcut in depth.

1.2.12 Rock: Solid homogeneous interlocking crystalline material with firmly cemented, laminated, or foliated masses or conglomerate deposits, neither of which can be removed without systematic drilling and blasting, drilling and the use of expansion jacks or feather wedges, or the use of backhoe mounted pneumatic hole punchers or rock breakers; also large boulders, buried masonry, or concrete other than pavement exceeding 0.76 m^3 (1 yd^3) in volume. Removal of "hard material" will not be considered rock excavation because of intermittent drilling and blasting that is performed merely to increase production.

1.2.13 Topsoil: In natural or undisturbed soil formations, the fine grained, weathered material on the surface or directly below any loose or partially decomposed organic matter. Topsoil may be a dark colored, fine, silty, or sandy material with a high content of well decomposed organic matter, often containing traces of the parent rock material.

1.2.14 Unyielding Material: Rock rib, ridge, rock protrusion, or soil with cobbles in the trench bottom requiring a covering of finer grain material or special bedding to avoid bridging in the pipe or conduit.

1.2.13 Unsatisfactory Material: In-Situ soil or other material which can be identified as having insufficient strength characteristics or stability to carry intended loads in the trench without excessive consolidation or loss of stability. Also backfill material which contains refuse, frozen material, large rocks, debris, soluble particles, and other material which could damage the pipe or cause the backfill not to compact. Materials classified as PT, OH, or OL by ASTM D 2487 are unsatisfactory.

1.2.14 Unstable Material: Material in the trench bottom which lacks firmness to maintain alignment and prevent joints from separating in the pipe, conduit, or appurtenance structure during backfilling. This may be material otherwise identified as satisfactory which has been disturbed or saturated.

1.2.15 Unsuitable Materials: Unsuitable materials include all material that contains debris, roots, organic matter, frozen matter, gravel, stone, or shale particles (with any dimension greater than 50 mm), or other materials that are too wet or otherwise unsuitable for providing a stable sub grade or stable foundation for structures.

1.2.16 Waste Material: Excess usable materials and underlying, unsatisfactory or unstable materials.

1.2.17 Borrow: Obtain borrow materials required in excess of those furnished from excavations from sources outside of Government property.

1.3 SUBMITTALS: Submit the following in accordance with Section 01 33 00, titled "SUBMITTALS PROCEDURES".

1.3.1 Shop Drawings:

a. Supporting System Drawings:

1.3.1.1 Drawings shall be submitted for information only and not for approval. Drawings shall include material sizes and types, and the arrangement of members.

1.3.2 Design Data:

a. Supporting System Calculations:

1.3.2.1 Calculations shall be submitted for information only and not for approval. Supporting System Calculations shall include data and references used.

b. Dewatering System Calculations

c. Ground water elevations

1.3.3 Statements: Submit before starting work:

1.3.3.1 Shoring and Sheeting Plan: Describe materials or shoring system to be used. Provide plans, sketches, and details for information only and not for approval. Indicate sequence and method of installation and removal.

1.3.3.2 Dewatering Work Plan: Describe methods to be employed in removing water from exposed surfaces and diverting surface water from other areas or structures. Describe the basic components of the dewatering system proposed and its planned method of operation. Provide plans, sketches, or other details along with dewatering system calculations where appropriate, for information only and not for approval. Indicate sequence and method of installation, removal, and abandonment of dewatering systems.

1.3.4 Test Reports:

a. Fill and backfill material
b. Select material test
c. Porous fill test for capillary water barrier
d. Density tests

1.4 PROTECTION:

1.4.1 Dewatering Plan: Base on site surface and subsurface conditions, available soil and hydrological data, where available.

1.4.2 Utilities: Movement of construction machinery and equipment over pipes and utilities during construction shall be at the Contractor's risk. Excavation made with power driven equipment is not permitted within two feet of known Government owned utility or subsurface construction. For work immediately adjacent to or for excavations exposing a utility or other buried obstruction, excavate by hand. Start hand excavation on each side of the indicated obstruction and continue until the

obstruction is uncovered or until clearance for the new grade is assured. Support uncovered lines or other existing work affected by the contract excavation until approval for backfill is granted by the Contracting Officer. Report damage to utility lines or subsurface construction immediately to the Contracting Officer.

PART II - PRODUCTS

2.1 SOIL MATERIALS: Provide soil materials as specified below free of debris, roots, wood, scrap material, vegetable matter, refuse, soft unsound particles, ice, or other deleterious and objectionable materials. Unless specified otherwise, the maximum particle diameter shall be one-half the lift thickness at the intended location.

2.1.1 Backfill: Bring trenches to grade indicated on the drawings using material excavated. This material will be considered unclassified and no testing other than for compaction will be required before use as backfill.

2.1.2 Special Backfill for Structures and Pavements: Backfill trenches under roads, structures, and paved areas"

2.1.3 Sand: Clean, coarse-grained sand classified as SW or SP by ASTM D 2487 for pipe bedding.

2.1.4 Gravel: Clean, coarsely graded natural gravel, crushed stone or a combination thereof having a classification of GW or GP in accordance with ASTM D 2487 for pipe bedding.

2.1.5 Backfill for Underdrainage Systems: Clean sand, crushed rock, or gravel meeting the following requirements:

a. Open Joint Pipe: Backfill meeting requirements of Type II material as specified in Table 1.

b. Any Type Drain Used With Filter Fabric: Backfill consisting of Type I or Type II material as specified in Table 1.

TABLE I

	Type I	**Type II**
	Gradation E 11	**Gradation 57**
ASTM D 422	**ASTM C 33**	**ASTM C 33**
Sieve Size	**Percent Passing**	**Percent Passing**
3.8 cm (1.5 in)	--	100
2.5 cm (1 in)	--	90 - 100
1 cm (3/8 in)	100	25 - 60
No. 4	95 - 100	5 - 40
No. 8	--	0 - 20
No. 16	45 - 80	--
No. 50	10 - 30	--
No. 100	0 - 10	--

2.1.6 Topsoil: Prior to spreading, test the topsoil, and add the necessary soil modifiers to bring the material within the ranges specified in Table II. Provide additional topsoil meeting the requirement described in Table II if stockpiled material is not sufficient to complete all indicated work. Provide material free of subsoil, stumps, rocks larger than 2 cm (3/4 in) diameter (with maximum 3 percent retained on 0.6 (1/4 in) screen), brush, weeds, toxic substances, and other material or substance detrimental to plant growth. Topsoil shall be a natural, friable soil representative of productive soils in the vicinity. Modify topsoil provided if necessary conform to the requirements specified in Table II.

TABLE II

DOA SSIR Laboratory Test for:	**Acceptable Limits**
Sand Content	20 - 45 percent by weight
Silt Content	25 - 50 percent by weight
Clay Content	10 - 30 percent by weight
Organic Material (Walkley-Block)	5 percent minimum

pH	5.0 to 7.6	
Soluble Salts	600 ppm maximum	
Absorption Rate	1.27 cm (0.5 in) per hour	minimum

2.1.7 Borrow: Provide materials meeting requirements for general site fill, general backfill, controlled backfill, granular fill, and topsoil. Obtain borrow materials in excess of those furnished from excavations described herein from sources off Government property.

2.1.8 Pipe Bedding: Provide sand or gravel material for pipe bedding as specified herein.

2.2 FILTER FABRIC: Provide a pervious sheet of polyester, nylon, glass or polypropylene, filaments woven, spun bonded, fused, or otherwise manufactured into a nonraveling fabric with uniform thickness and strength. The fabric shall have the following manufacturer certified minimum average roll properties as determined by ASTM D 4759:

		Class A	**Class B**
a. Grab tensile strength (ASTM D 4632) machine and transverse direction	min.	180	36 Kg. (80 lbs)
b. Grab elongation (ASTM D 4632) machine and transverse direction	min.	15	15 percent
c. Puncture resistance (UNE-EN ISO 12236)	min.	80	11.25 Kg. (25 lbs)
d. Mullen burst strength (UNE-EN 14151)	min.	290	9 Kg/cm^2. (130 psi)
e. Trapezoidal tear strength (UNE 40529)	min.	50	11.25 Kg. (25 lbs)
f. Apparent opening size (UNE-EN ISO 12956)	See Criteria Below		

1. Soil with 50% or less particles by weight passing US No. 200 Sieve, AOS less than 0.6mm (greater than #30 US Std. Sieve)

2. Soil with more than 50% particles by weight passing US No. 200 Sieve, AOS less that 0.297mm (greater than #50 US Std. Sieve)

g. Permeability (ASTM D 4491) k fabric> k soil

h. Ultraviolet Degradation (ASTM D 4355) 70% Strength Retained at 150 hours

2.3 ORGANIC MAT: The organic mat shall be type “SE” straw and esparto as manufactured by “Bonterra Iberica S.A.” or similar approved. The organic mat shall be easily unrolled, with a tube in the center of the roll. Both sides of the blankets shall be interwoven and shall remain so when cut. The mat will not have bare zones and the distribution of the mix will be homogeneous with a thickness between 4 and 6 mm, an average grass thickness between 25 and 425 gr/m^2 and a minimum tensile strength of 225 Kg/m^2.

2.4 BURIED WARNING TAPE: Polyethylene plastic warning tape manufactured specifically for warning and identification of buried utility systems, minimum 3 inch width, color coded for the intended utility with warning and utility identification imprinted in bold black letters continuously over the tape length. Tape color and printing shall be permanent, unaffected by moisture or soil.

PART III - EXECUTION

3.1 PROTECTION

3.1.1 Shoring and Sheeting: Provide shoring, bracing, trench boxes or other protection where required. In addition to Section XXIII A and B of COE EM-385-1-1 and other requirements as set forth in this contract, include provisions in the shoring and sheeting plan that will accomplish the following:

a. Prevent undermining of pavements, foundations and slabs.

b. Prevent slippage or movement in banks or slopes adjacent to the excavation.

3.1.2 The Contractor shall have the option to slope the faces of excavations in lieu of providing shoring provided all the following conditions are met:

1. The excavation is less than 6 meters (20 feet) in depth.

2. There are no adjacent structures, roads, or pavements that will affect the excavation

3. No equipment, stored material, or overlying material will affect the excavation.

4. Vibration from equipment, traffic, or blasting will not affect the excavation.

5. There will be no ground water problems.

6. Surcharges will not affect the excavation.

7. Station operational considerations permit laying back the slopes of the excavation.

3.1.3 Dewatering: Plan for and provide the structures, equipment, and construction for the collection and disposal of surface and subsurface water encountered in the course of construction.

3.1.4 Water Removal: Remove water by pumping or other methods to prevent the softening of surfaces exposed by excavation, prevent hydrostatic uplift, and provide a stable trench condition for installation of the utility. Use screens and gravel packs or other filtering systems on the dewatering devices to prevent the removal of fines from the soil.

3.1.5 Operation and Performance: Operate the dewatering system until construction work below existing water levels is complete. After placement of the pipe or conduit and the initial backfill, the water level may be allowed to rise but at no time allow it to rise higher than 30 cm (1 ft) below the prevailing level of excavation or backfill.

3.1.6 Structures and Surfaces: Protect newly backfilled areas and adjacent structures, slopes, or grades from traffic, erosion settlement, or any other damage. Repair and reestablish damaged or eroded grades and slopes and restore surface construction prior to acceptance. Perform work in accordance with requirements specified in Section 01 57 19.00 20, titled "TEMPORARY ENVIRONMENTAL CONTROL".

3.1.6.1 Disposal of Excavated Material: Dispose of excavated material so that it will not obstruct the flow of runoff, streams, endanger a partly finished structure, impair the efficiency or appearance of any facilities, or be detrimental to the completed work.

3.1.6.2 Stockpile Rock: Stockpile rock from trench excavations and use for constructing sides and bottoms of channels (rip-rap,). Remove excess stockpiled rock upon completion of construction.

3.2 SURFACE PREPARATION:

3.2.1 Stockpiling Topsoil: Strip suitable soil from the site where excavation or grading is indicated and stockpile separately from other excavated material. Material unsuitable for use as topsoil shall be stockpiled and used for backfilling. Locate topsoil so that the material can be used readily for the finished grading. Where sufficient existing topsoil conforming to the material requirements is not available on site, provide borrow materials suitable for use as topsoil. Protect topsoil and keep in segregated piles until needed.

3.2.2 Cutting Pavement, Curbs, and Gutters: Saw cut with neat, parallel, straight lines 30 cm (1 ft) wider than trench width on each side of trenches and one foot beyond each edge of pits.

3.3 GENERAL EXCAVATION AND TRENCHING: Keep excavations free from water while construction is in progress. Notify the Contracting Officer immediately in writing if it becomes necessary to remove rock or hard, unstable, or otherwise unsatisfactory material to a depth greater than indicated. Make trench sides as nearly vertical as practicable except where sloping of sides is allowed. Sides of trenches shall not be sloped from the bottom of the trench up to the elevation of the top of the pipe. Excavate ledge rock, boulders, and other unyielding material to an depth at least 15 cm (6 in) below the bottom of the pipe and appurtenances unless otherwise indicated or specified. Blasting will not be permitted. Over excavate soft, weak, or wet excavations as required. Use bedding material placed in 15 cm (6 in) maximum layers to refill over depths to the proper grade. At the Contractor's option, the excavations may be cut to a depth of not less than 10 cm (4 in) and refilled to required grade as specified. Grade bottom of trenches accurately to provide uniform bearing and support for each section of pipe and/or structure on undisturbed soil, or bedding material as indicated or specified at every point along its entire length except for portions where it is necessary to excavate for bell holes and for making proper joints. Dig bell holes and depressions for joints after trench has been graded. Dimension of bell holes shall be as required for properly making the particular type of joint to ensure that the bell does not bear on the bottom of the excavation. Trench dimensions shall be as indicated or specified.

3.3.1 Shoring and Sheeting: Shore and sheet excavations as described in the plan submitted with various member sizes arranged to prevent injury to persons and damage to structures. Arrange shoring and sheeting to preclude injurious caving during removal. Obtain approval from the Contracting Officer prior to removing shoring, sheeting, or bracing in excavations adjacent to on-grade slabs, foundations, or other structural elements.

3.4 BEDDING: Material as specified and depths as indicated. Place bedding in 15 cm (6 in) maximum loose lifts. Provide uniform and continuous support for each section of pipe except at bell holes or depressions necessary for making proper joints.

3.5 BURIED WARNING AND IDENTIFICATION TAPE: Install tape in accordance with manufacturer's recommendations except as modified herein. Bury tape 30 cm (12 in) below finished grade; under pavements and slabs, bury tape 15 cm (6 in) below top of sub-grade.

3.6 BACKFILLING: Construct backfill in two operations (initial and final) as indicated and specified in this section. Place initial backfill in 15 cm (6 in) maximum loose lifts to 30 cm (1 ft) above pipe unless otherwise specified. Ensure that initially placed material is tamped firmly under pipe haunches. Bring up evenly on each side and along the full length of the pipe or structure. Ensure that no damage is done to the utility or its protective coating. Place the remainder of the backfill (final backfill) in 23 cm (9 in) maximum loose lifts unless otherwise specified. Compact each loose lift as specified in the paragraph entitled "General Compaction" before placing the next lift. Do not backfill in freezing weather or where the material in the trench is already frozen or is muddy, except as authorized. Provide a minimum cover from final grade of 30 cm (2-1/2 ft) for water piping, storm drains and 60 cm (2 ft) for sewer mains. Where settlements greater than the tolerance allowed herein for grading occur in trenches and pits due to improper compaction, excavate to the depth necessary to rectify the problem, then backfill and compact the excavation as specified herein and restore the surface to the required elevation. Coordinate backfilling with testing of utilities. Provide buried warning and identification tape installed as specified herein.

3.7 COMPACTION: Use hand-operated, plate-type, vibratory, or other suitable hand tampers in areas not accessible to larger rollers or compactors. Avoid damaging pipes and protective pipe coatings. Compact material in accordance with the following unless otherwise specified. If necessary, alter, change, or modify selected equipment or compaction methods to meet specified compaction requirements.

3.7.1 Compaction of Material in Sub-cuts or Over Excavations: In rock, compact to 95 percent of NLT 311 maximum density. In soft, weak, or wet soils, tamp refill material to consolidate to density of adjacent material in trench wall. In stable soils, compact to 90 percent of NLT 311 maximum density.

3.7.2 Compaction of Pipe Bedding: In rock, compact to 95 percent and in soil, compact to 90 percent of NLT 311 maximum density.

3.7.3 Compaction of Backfill: Compact initial backfill material surrounding pipes to 90 percent of NLT 311 maximum density except where bedding and backfill are the same material. Where bedding and backfill are the same material, compact initial backfill to the density of the bedding. Under areas to be seeded or sodded, compact succeeding layers of final backfill to 85 percent of NLT 311maximum density. For utilities under highway right-of-way, structures and pavements, compact succeeding layers of final backfill as specified under paragraph entitled "Special Earthwork Installation Requirements."

3.8 SPECIAL EARTHWORK INSTALLATION REQUIREMENTS:

3.8.1 Concrete Culvert Piping Under Embankment: Construct the embankment to 15 cm (6 in) above elevation of top of pipe.

3.8.2 Manholes and Other Appurtenances: Provide at least 30 cm (12 in) clear from outer surfaces to the embankment or shoring. Remove rock as specified herein. Remove unstable soil that is incapable of supporting the structure to an depth of 30 cm (1 ft) and refill with pipe bedding material to the proper elevation. Stabilize soft, weak, or wet excavations as specified. Refill over depths with pipe bedding material to the required grade and compact as specified to 90 percent of NLT 311 maximum density.

3.8.3 Compaction for Structures and Pavements: Place final backfill in 15 cm (6 in) maximum loose lifts. If a vibratory roller is used for compaction of final backfill, the lift thickness can be increased to 23 cm (9 in). Compact all back-fill surrounding pipes and other structures to 90 percent of NLT 311 maximum density except compact the top 30 cm (12 in) of sub-grade to 95 percent of NLT 311 maximum density. Backfill to permit the rolling and compacting of the completed excavation with the adjoining material, providing the specified density necessary to enable paving of the area immediately after back-filling has been completed. Compaction requirements for materials in pavement sections above the sub-grade level shall be as specified in Section 32 11 24, titled "GRADED CRUSHED AGGREGATE BASE COURSE FOR FLEXIBLE PAVEMENT".

3.9 SPECIAL EARTHWORK REQUIREMENTS FOR SUBSURFACE DRAINS: Excavate to dimensions indicated. Provide a bedding surface of no more than 2.5 cm (1 in) of Type I sub-drain backfill material and place on compacted native soil as indicated. Backfill around and over the pipes after pipe installation has been approved. Place special granular filter material, as specified herein, in 15 cm (6 in) lifts and compact with mechanical, vibrating plate tampers or rammers until no further consolidation can be achieved. Compact backfill overlying the special granular filter material as specified for adjacent or overlying work.

3.9.1 Granular Backfill Without Filter Fabric:

3.9.1.1 Open-Joint and Porous Concrete Pipe: Place both types of granular material specified as pipe is laid forming an aggregate filter around the pipe. Provide Type II material to envelope the pipe a minimum of one-half the pipe diameter or twice the maximum aggregate size, whichever is larger, on each side and on top of the pipe. Place Type I material next to and on top of the Type II material to provide a total fill extending at least one pipe diameter on each side of and 46 cm (18 in) above the top of the pipe. Place a layer of kraft paper on top of the granular filter before continuing with the backfill.

3.9.2 Granular Backfill Using Filter Fabric

3.9.2.1 Open-Joint and Porous Concrete Pipe: Wrap one layer of filter fabric around pipe joints overlapping a minimum of 5 cm (2 in) in the longitudinal direction and extending at least 15 cm (6 in) on both sides of the joint.
Secure fabric to pipe so that backfill material does not infiltrate through overlaps. Place granular material specified and extends it for a minimum of one pipe diameter on each side of and 46 cm (18 in) above top of pipe. Place a layer of filter fabric on top of granular filter before continuing with backfill.

3.10 SPECIAL EARTHWORK REQUIREMENTS FOR SURFACE CULVERT DRAINS: Excavate to dimensions and profile as indicated on contract drawing, PLATE # 5, and compact all faces of the culvert ditch with mechanical, vibrating plate tampers or rammers until no further consolidation can be achieved. Once the drainage channel is finished, a ditch will be opened of about a depth of 15 cm, where the border of the organic mat will be inserted. The mat will be unrolled without stretching it, providing a full contact with the ground, to facilitate the growth of the plants through the mat. The overlapping of the mat strips will be 10 cm by the sides as well as by the end edges of the mat. The mat shall be secured by means of metallic clamps as indicated on Plate # 5.

3.11 FINISH OPERATIONS:

3.11.1 Grading: Finish to grades indicated within 3 cm (one-tenth of a foot). Provide sod or topsoil in areas to be seeded or sodded as indicated. Grade areas to drain water away from structures and to provide suitable surfaces for mowing machines. Grade existing grades that are to remain but have been disturbed by the Contractor's operations.

3.11.2 Spreading Topsoil: Clear areas to receive topsoil for the finished surface of materials that would interfere with planting and maintenance operations. Scarify sub-grade to a depth of 5 cm (2 in). Do not place topsoil when the sub-grade is frozen, extremely wet or dry, or in other conditions detrimental to seeding, planting, or grading. Spread topsoil to a uniform depth of 10 cm (4 in) over the designated areas.

3.11.3 Disposition of Surplus Material: Surplus or other soil material not required or suitable for filling, back-filling, or grading shall be either wasted by disposition in the work site or removed from the work site and disposed of in the sanitary landfill. Spread and level wasted material, grade to the elevations indicated. Comply with requirements of Section 01 57 19.00 20, titled "TEMPORARY ENVIRONMENTAL CONTROL".

3.11.4 Protection of Surfaces: Protect newly graded areas from traffic, erosion, and settlements that may occur and as required in Section 01 57 19.00 20, "Temporary Environmental Control." Repair or reestablish damaged grades, elevations, or slopes.

3.11.5 Pavement Repair: Repair pavement as specified in Section 32 12 17, titled "HOT MIX BITUMINOUS PAVEMENT". Do not repair pavement until trench or pit has been back-filled and compacted as specified herein. Provide a temporary road surface of crushed stone over back-filled portion until permanent pavement is repaired. Remove and dispose of temporary road surface material when permanent pavement is placed. As a minimum, maintain one-way traffic on roads and streets crossed by trenches. Fully open roads and streets to traffic within one day.

3.12 FIELD QUALITY CONTROL: Test bedding, backfill and topsoil for conformance to specified requirements. Test backfill to be used under roads and paved areas for conformance to special requirements. Test backfill for moisture-density relations in accordance with ASTM D 1557 as specified herein. Perform at least one of each of the required tests for each material provided. Perform sufficiently in advance of construction so as not to delay work. Provide additional tests as specified above for each change of source. Perform final tests on topsoil to ensure adjustment of parameters into the ranges specified. Perform density and moisture tests in randomly selected locations and in accordance with UNE 103503, ASTM D 2922 and/or ASTM D 3017 (equipment Troxler) as follows:

a. Bedding and Backfill in Trenches: One test per 15 m (50 ft) in each lift.

b. Appurtenance Structures: One test per 9 m^2 (100 ft^2) or fraction thereof in each lift.

***** END OF SECTION *****

SECTION 32 01 16.17

COLD MILLING OF BITUMINOUS PAVEMENTS

PART 1 - GENERAL

1.1 REFERENCES
The publications listed below form a part of this specification to the extent referenced. The publications are referred to within the text by the basic designation only. The latest edition of the referenced publications shall govern.

1.1.1 CENTRO PUBLICACIONES DEL MINISTERIO DE FOMENTO

PG-3 Pliego de Prescripciones Técnicas Generales para Obras de Carreteras y Puentes.

1.2 EQUIPMENT, TOOLS, AND MACHINES

Equipment, tools, and machines used in the performance of the work shall be maintained in a satisfactory working condition.

1.2.1 Cold-Milling Machine

The cold-milling machine shall be a self-propelled machine capable of milling the pavement to a specified depth and smoothness. Pavement milling machine shall be capable of establishing gradecontrol; shall have means of controlling transverse slope; and shall have effective means of controlling dust produced during the pavement milling operation. The machine shall have the ability to remove the millings or cuttings from the pavement and load them into a truck. The milling machine shall not cause damage to any part of the pavement structure that is not to be removed.

1.2.2 Cleaning Equipment

Cleaning equipment shall be suitable for removing and cleaning loose material from the pavement surface.

1.2.3 Straightedge

The Contractor shall furnish and maintain at the site, in good condition, one 3.66 meter(12 foot) straightedge or other suitable device for each milling machine, for testing the finished surface.
Straightedge shall be made available for Government use. Straightedges shall be constructed of aluminum or other lightweight metal, and shall have blades of box or box-girder cross section with flat bottom reinforced to insure rigidity and accuracy. Straightedges shall have handles to facilitate movement on the pavement.

1.3 GRADE AND SURFACE-SMOOTHNESS REQUIREMENTS

1.3.1 Grade

The finished milled surfaces shall conform to the cross sections indicated. The finished milledpavementsurfaces shall vary not more than 6 mm from the established depth. Finished surfaces at a juncture with other pavements shall coincide with the finished surfaces of the abutting pavements. The deviations will not be permitted in areas of pavements where closer conformance is required for the proper functioning of appurtenant structures involved.

1.4.2 Surface Smoothness

Finished surfaces shall not deviate from the testing edge of a straightedge more than 6 mm in the transverse or longitudinal direction.

1.5 TRAFFIC CONTROL
The Contractor shall provide all necessary traffic controls during milling operations. Contractor shall present a traffic control plan to the Contracting Officer for approval.

PART 2 - PRODUCTS
(Not Applicable)

PART 3 - EXECUTION

3.1 PREPARATION OF SURFACE

The pavement surface shall be cleaned of excessive dirt, clay, or other foreign material immediately prior to milling the pavement.

3.2 MILLING OPERATION

A minimum of seven days notice is required, prior to start work, for the Contracting Officer to coordinate the milling operation with other activities at the site. Sufficient passes shall be made so that the designated area is milled to the depth indicated. The milling shall proceed with care and in depth increments that will not damage the pavement below the designated depth. Items damaged during milling, such as manholes, valve boxes, utility lines, pavement that is torn, cracked, gouged, broken, or undercut, shall be repaired or replaced as directed at no cost to the Government. The milled material shall be removed from the pavement and loaded into trucks.

3.3 GRADE AND SURFACE-SMOOTHNESS TESTING

3.3.1 Grade-Conformance Tests

The finished milled surface of the pavement shall be tested for conformance with the plan-grade requirements and will be tested for acceptance by the Contracting Officer by running lines of levels at
intervals of 7.5 meters longitudinally and 7.5 meters transversely to determine the elevation of the completed pavement. The Contractor shall correct variations from the designated grade line and elevation in excess of the plan-grade requirements as directed. Skin patching for correcting low areas will not be permitted. The Contractor shall remove and replace the deficient low area. Sufficient material shall be removed to allow at least 25 mm of asphalt concrete to be placed.

3.4 REMOVAL OF MILLED MATERIAL

Material that is removed shall be become the property of the Contractor and removed from the site.

-- End of Section --

SECTION 32 01 22

BITUMINOUS REJUVENATION: SLURRY SEAL

PART I - GENERAL

1.1 GENERAL REQUIREMENTS: The work includes providing a single asphalt slurry seal on existing pavement surface. The asphalt slurry seal shall consist of a single application of bituminous material covered with mineral aggregate uniformly spread over a properly prepared surface and rolled to a smooth, even textured surface. Rolling operations shall be accomplished with pneumatic tired rollers; steel-wheeled rollers may be used in a supplementary capacity only. The slurry seal shall be applied as a homogeneous mat, adhere firmly to the prepared surface, and have a skid-resistant texture throughout its service life.

1.2 REFERENCES: The publications listed below form a part of this specification to the extent referenced. The publications are referred to in the text by the basic designation only. The latest edition of the referenced publications shall govern.

1.2.1 AMERICAN SOCIETY FOR TESTING AND MATERIALS (ASTM):

ASTM C 29C 29M	Unit Weight and Voids in Aggregate
ASTM C 117	Materials Finer Than 75-um (No. 200) Sieve in Mineral Aggregates by Washing
ASTM C 128	Specific Gravity and Absorption of Fine Aggregate
ASTM C 131	Resistance to Degradation of Small-Size Coarse Aggregate by Abrasion and Impact in the Los Angeles Machine
ASTM C 136	Sieve Analysis of Fine and Coarse Aggregates
ASTM C 150	Portland Cement
ASTM C 207	Hydrated Lime for Masonry Purposes
ASTM C 295	Petrographic Examination of Aggregates for Concrete
ASTM C 618	Fly Ash and Raw or Calcined Natural Pozzolan for Use as a Mineral Admixture in Portland Cement Concrete
ASTM D 75	Sampling Aggregates
ASTM D 140	Sampling Bituminous Materials
ASTM D 242	Mineral Filler for Bituminous Paving Mixtures
ASTM D 244	Emulsified Asphalts
ASTM D 977	Emulsified Asphalt
ASTM D 1073	Fine Aggregate for Bituminous Paving Mixtures

ASTM D 2172 Quantitative Extraction of Bitumen from Bituminous Paving Mixtures

ASTM D 2397 Cationic Emulsified Asphalt

ASTM D 2419 Sand Equivalent Value of Soils and Fine Aggregate

ASTM D 3910 Design, Testing, and Construction of Slurry Seal

1.2.2 CORPS OF ENGINEERS (COE):

COE EM-385-1-1 Safety and Health Requirements Manual

1.2.3 DEPARTMENT OF TRANSPORTATION (DOT):

DOT D-6.1 Uniform Traffic Control Devices for Streets and Highways

1.2.4 FEDERAL SPECIFICATIONS (FS):

FS SS-S-1401 Sealants, Joint, Non-Jet-Fuel-Resistant, Hot-Applied, for Portland Cement and Asphalt Concrete Pavements

1.2.5 INTERNATIONAL SLURRY SEAL ASSOCIATION (ISSA):

ISSA 101 Sampling of the Slurry Mix for Extraction Tests

ISSA 102 Mixing, Setting and Water Resistance Test to Identify "Quick-Set" Emulsified Asphalts

ISSA 114 1978 Wet Stripping Test for Cured Slurry Seal Mixes

ISSA 115 Determination of Slurry System Compatibility

1.2.6 NORMAS DE ENSAYO DEL LABORATORIO DE CARRETERAS Y GEOTECNIA DEL MOPU (NLT):

NLT-121 Toma de Muestras de Materiales Bituminosos

NLT-124 Penetracion de Materiales Bituminosos

NLT-126 Ductilidad de Materiales Bituminosos

NLT-130 Solubilidad en Disolventes Organicos de Materiales Bituminosos

NLT-137 Agua en Emulsion Bituminosos

NLT-138 Viscosidad Saybolt de Emulsiones Bituminosos

NLT-140 Sedimentacion en las Emulsiones Bituminosos

NLT-142 Tamizado de las Emulsiones Bituminosos

1.2.7 CENTRO DE PUBLICACIONES DEL MINISTERIO DE FOMENTO(MF):

PG-3, Art. 213 Pliego de Prescripciones Tecnicas Generales para Obras de Carreteras Y Puentes. Emulsiones Asfalticas

1.3 SUBMITTALS: Submit the following in accordance with Section 01 33 00, titled “SUBMITTALS PROCEDURES."

1.3.1 Manufacturer's Catalog Data: Provide manufacturer's descriptive catalog data for the following:

a. Crack sterilant
b. Crack sealant
c. Additives

1.3.2 Design Data: Provide design data for the following:

a. Slurry seal job mix formula
b. Test result data

1.3.2.1 Slurry Seal Job Mix Formula: Submit to indicate compliance with paragraph entitled "Slurry Seal." Information shall include emulsified asphalt type and quantity; water content; aggregate type and quantity, specific gravity, absorption, and unit weight; mineral filler type and quantity; gradation and sand equivalent of the blended aggregate and mineral filler; and additives, type, and quantity.

1.3.2.2 Test Result Data: Information shall include slurry seal initial set time, cure time, residual asphalt content, consistency results, wet stripping results, compatibility results, quick-set emulsion test results, wet track abrasion loss test results, and application rate.

1.3.3 Test Reports: Provide copies of test reports, indicating compliance with the contract requirements, for the following:

a. Aggregate and mineral filler combined
b. Aggregate

1.3.3.1 Aggregate and Mineral Filler Combined Properties: Aggregate and mineral filler combined, ASTM D 2419 sand equivalent, ASTM C 136 and ASTM C 117 gradation.

1.3.3.2 Aggregate Properties: Aggregate, ASTM C 131 percentage of wear, ASTM C 128 specific gravity and absorption, ASTM C 29 unit weight, ASTM C 295 petrographic examination and ASTM D 1073 soundness.

1.3.4 Field Test Reports: Provide field inspection and test reports for the following:

a. Emulsified asphalt test
b. Aggregate test
c. Aggregate and mineral filler test
d. Asphalt slurry mix test

1.3.4.1 Submit report for testing of samples as specified in paragraph entitled "Field Quality Control."

1.4 STORAGE AND PROTECTION: Store aggregate in a manner to prevent contamination or segregation of material. Provide storage facilities for emulsified asphalt and additives to prevent freezing and contamination from other products or water.

1.5 BARRICADES AND SIGNALS: Provide and maintain temporary signs, traffic control devices, signals, lighting devices, markings, barricades, and channelizing and hand signaling devices to protect personnel and new construction from damage by equipment and vehicles during slurry seal placement, and until the slurry sealed surface is approved by the Contracting Officer.

1.6 CONSTRUCTION EQUIPMENT: Maintain equipment, tools, and machines in satisfactory working order. Discontinue use of equipment which fails to produce satisfactory work or when metering devices do not work properly.

1.6.1 Slurry Seal Mixing and Spreading Equipment: ASTM D 3910. Equipment shall be specifically designed for slurry seal use. After a day's operation, thoroughly clean the slurry application equipment before storing for the night. When additives are used, slurry seal equipment shall be provided with accurate metering devices for the addition of additives. Calibrate equipment in the presence of the Contracting Officer prior to construction. Previous calibration documentation covering the exact materials to be used may be accepted provided documentation is less than one year old. Documentation shall include individual calibration of each material at various settings, which can be related to the machine's metering equipment.

1.6.2 Bituminous Distributor: Bituminous distributor shall be designed and equipped to distribute the tack coat uniformly at even heat on variable widths of surface at readily determined and controlled rates from 0.23 to 9.05 l/m^2 (0.05 to 2.0 gl/yd^2), with a pressure range of 1.72 to 5.2 $Kg.cm^2$ (25 to 75 psi) and with an allowable variation not to exceed 5 percent from any specified rate. Distributor equipment shall include a separate power unit for the bitumen pump, full circulation spray bars, tachometer, pressure gages, volume measuring devices, heaters for heating materials to the proper application temperature, thermometer for reading the temperature of tank contents, and a hose and spray nozzle attachment suitable for applying tack coat to spots unavoidably missed by the distributor and to areas inaccessible to the distributor. Distributor shall be equipped to circulate and agitate the tack coat during the heating process.

1.6.3 Rollers: Smooth pneumatic-tired, minimum 7-wheeled, with a minimum weight of 900 Kg (2000 pounds) per wheel. Inflate tires to 50, plus or minus 5 psi, and space tires on one axle to cover the gap between tires on the other axle. Rollers shall operate forward and backward without turning and shall not loosen the surface being rolled. Provide rollers with water tanks and sprinkling equipment to keep the wheels damp and prevent adherence of the slurry seal to the wheels.

1.6.4 Cleaning and Auxiliary Equipment: ASTM D 3910.

1.6.5 Crack Sealing Equipment: Truck or trailer mounted pressure applicators for dispensing hot or cold applied sealing materials. Equip with nozzles of size and shape needed to convey the sealing materials into the crack opening.

PART II - PRODUCTS

2.1 SLURRY SEAL: ASTM D 3910 Contractor furnished laboratory mix design, except as modified herein. A "quick-set" slurry seal may be provided at the Contractor's option. Slurry seal shall provide an ASTM D 2172 residual asphalt content (percent of asphalt by weight of dry aggregate) of 10.5 plus or minus 3. Slurry seal shall not pick up on the abrasion head during wet track abrasion loss test, shall not segregate during or after application to the pavement, and shall provide the following properties:

TEST	TEST METHOD	TEST REQUIREMENTS
Consistency	ASTM D 3910	2.5 cm (1 in)
Wet Stripping	ISSA 114	Pass
Compatibility	ISSA 115	Pass (See Note 1)

TEST	TEST METHOD	TEST REQUIREMENTS
Quick-Set Emulsions	ISSA 102	Pass (See Note 2)
Wet Track Abrasion	ASTM D 3910	Max 2.6 (oz/ft^2)

Set Time ("except quick-set")	ASTM D 3910	Max 12 hours
"Quick-Set" Set Time	ASTM D 3910	Max 1 hour
Cure Time	ASTM D 3910	Max 24 hours

Note 1: Mixing tests shall pass at the maximum expected air temperature. Note 2: Using job aggregate.

2.1.1 Emulsified Asphalt: ASTM D 977, anionic Type SS-1 or SS-1h; ASTM D 2397, cationic Type CSS-1 or CSS-1h; or MF PG-3, Article 213, Type ECL-1. "Quick-Set" asphalts shall also conform to ISSA 102, except the cement mixing test shall not be used. Select asphalt that best performs with the aggregate to be used on the job.

2.1.2 Aggregate and Mineral Filler: Blended aggregate and mineral filler shall provide a minimum ASTM D 2419 sand equivalent of 45 for anionic emulsions and 60 for cationic and "quick-set" emulsions. Blended aggregate and mineral filler shall be smoothly graded and shall not vary from the low limit on one sieve to the high limit on the adjacent sieve. Provide the following NLT-150 and NLT-151 (ASTM C 136 and ASTM C 117) gradations:

Sieve Size	Passing
3/8-inch (9.5 mm)	100
No. 4 (4.75 mm)	90-100
No. 8 (2.36 mm)	65-90
No. 16 (1.18 mm)	45-70
No. 30 (.400 mm)	30-50
No. 50 (.300 mm)	18-30
No. 100 (.160 mm)	10-21
No. 200 (.080 mm)	5-15

2.1.2.1 Aggregate: Crushed stone, crushed gravel, or crushed slag, free from dust, dirt, clay, organic matter, and other deleterious matter. Aggregate shall have maximum ASTM C 131, Grading D, percentage of wear of 35 percent and shall meet ASTM D 1073 soundness requirements. Particle shape of crushed aggregate shall be essentially cubical with a maximum of 20 percent by weight of flat and elongated particles on any sieve size. Crushed gravel retained on 9.5 mm and 4.75 mm (3/8 in sieve and No. 4) sieve shall contain a minimum of 75 percent by weight of crushed pieces having a minimum of two fractured faces, with the area of each fractured face equal to a minimum of 75 percent of the smallest midsectional area of the piece. Crushed gravel retained on the 0.400 mm (No. 30) sieve shall contain a minimum of 90 percent by weight of crushed pieces having a minimum of two fractured faces.

2.1.2.2 Mineral Filler: ASTM D 242 consisting of ASTM C 207 hydrated lime, ASTM C 150 Type I or II portland cement, ASTM C 618 fly ash or limestone dust.

2.1.3 Water: Potable, with a maximum sulfate content of 1000 parts per million (ppm).

2.1.4 Additives: Chemical additives for acceleration or retardation of the slurry break-set or for improvement of the resulting finished surface may be provided. Quantity of additives shall be predetermined by the mix design, with field adjustments approved by the Contracting Officer.

2.1.5 Crack Sterilant: Bromacil, diuron, monuron-TCA, or prometon. Apply crack sterilant in liquid form, and at highest allowable concentration rate indicated on the label.

2.1.6 Crack Sealant: FS SS-S-1401 or a mixture of slurry seal aggregate passing the No. 8 sieve, slurry seal emulsified asphalt at 20 percent by dry weight of aggregate, and sufficient water to allow the mixture to flow into the crack.

PART III - EXECUTION

3.1 SURFACE PREPARATION: Immediately prior to slurry seal application, clean surface of loose material, dirt, vegetation, paint, rubber deposits, oil, grease, and other objectionable material. When approved, high-pressure water may be used for the removal of traffic paint and for cleaning surface. Remove water puddles by sweeping. Obtain surface preparation approval prior to slurry seal application.

3.1.1 Crack Preparation: Prior to surface cleaning, sterilize, clean, and seal cracks 6.35 mm (1/4 in) wide and larger.
3.1.1.1 Cleaning: Clean and blow out cracks using compressed air.

3.1.1.2 Sterilizing: Apply crack sterilant in accordance with manufacturer's instructions. Saturate crack to the point of runoff.

3.1.1.3 Sealing: Fill cracks 6.35 mm (1/4 in) wide and larger with crack sealant flush to the surface; remove excess crack sealant from pavement surface. Permit crack sealant to cure prior to surface cleaning.

3.1.2 Oil Removal: Remove surface oil and grease by scrubbing with an approved detergent and water. Flush surface free of detergent.

3.1.3 Protective Coverings: Prior to slurry sealing, apply protective coverings over utility covers, ground mounted light fixtures including bases, curbs, and gutters. After slurry sealing, remove protective coverings.

3.2 SLURRY SEAL APPLICATION: ASTM D 3910 except as specified otherwise. Mix and apply slurry seal with approved equipment. Job mix shall be same as laboratory mix design. Maintain sufficient slurry seal in spreader to ensure complete pavement coverage. When applied to pavement, slurry seal shall show no signs of lumping, balling, unmixed aggregate, excessive emulsion breaking, segregation of emulsion and aggregate fines from coarse aggregate, or coarse aggregate settling to bottom of mix. Slurry seal which exhibits one or more of the above characteristics shall be considered defective, shall be removed from the site, and a new slurry seal provided. Maximum mixing time shall be 2 minutes. Opening to traffic prior to receiving test results does not constitute acceptance of work.

3.2.1 Fog Spray: Immediately preceding the spreader, moisten pavement surface with a fog spray of water at the rate of 0.09 to 0.15 l/m^2 (0.03 to 0.05 gl/yd^2) if existing pavement is not already moist. Do not permit free water to remain on pavement or to be pushed in front of spreader box.

3.2.2 Weather Limitations: Apply slurry seal when existing pavement is clean and free of visible moisture, pavement is above 10° C (50° F), and minimum ambient temperature is 10° C and rising. Measure pavement temperature by filling a crack or small drill hole in the pavement with water, allowing water to stand for 15 minutes, then inserting a thermometer into the water and reading the temperature. Do not apply ASTM D 977 anionic type slurry seal if rain is forecasted for the next 8 hours, or if ambient temperatures below 2° C (35° F) are forecasted for the next 72 hours. Do not apply ASTM D 2397 cationic or ISSA 102 "quick-set" type slurry seal if rain is forecasted for the next 4 hours, or if ambient temperatures below 2° C are forecasted for the next 24 hours.

3.2.3 Application Rate: Apply slurry seal at the rate of 3.6 to 5.4 Kg/m^2
(10 to 15 lbs/yd^2).

3.2.4 Joints: No excessive buildup, uncovered areas or unsightly appearance shall be permitted on longitudinal or transverse joints. Excessive overlaps shall not be permitted on longitudinal joints. Provide suitable width spreading equipment to produce a minimum number of longitudinal joints throughout the project. When possible, place longitudinal joints on lane lines. Use half passes and odd width passes only in minimum amounts and not as the last pass of a paved area.

3.2.5 Hand Work: Use hand squeegees to apply slurry seal to areas not accessible to the slurry seal machine. Fog spray area prior to slurry seal application.

3.2.6 Finishing: Use burlap drags to even the surface and leave a rough texture of slurry seal application. Remove burlap drags that have stiffened from hardened slurry or asphalt and provide new drags. Finished pavement shall not have streaks, excessive buildup on joints, or unsightly appearance from hand work.

3.2.7 Curing: Cure slurry sealed areas for a minimum of 24 hours. Provide longer curing periods when weather conditions, such as low temperatures or high relative humidity, prevent proper slurry seal curing.

3.3 FIELD QUALITY CONTROL:

3.3.1 Sampling:

3.3.1.1 Identification: Place each sample in a clean container and furnish with the following information:

a. Contract number;
b. Sample number;
c. Quantity;
d. Date of sample;
e. Sample;
f. Source;
g. Intended use; and
h. Type of testing supplied for.

3.3.1.2 Emulsified Asphalt Sample: ASTM D 140. Sample immediately after site delivery and for each source change. Take additional samples from the slurry machine storage tanks when directed.

3.3.1.3 Aggregate Sample: ASTM D 75. Take one initial sample from each stockpile and three samples for every 200 tons thereafter. Repeat sampling for each source change or when gradation variations exceed specified requirements. A sample shall consist of three random incremental samples mixed together to form a minimum composite sample of 23 Kg (50 pounds).

3.3.1.4 Slurry Mix Sample: ISSA 101. Take two samples daily from the diverter of each slurry machine after the slurry machine has traveled a minimum of 30 meters (100 ft). Take one in-place sample at the start of the job and for every 800 m^2 (1000 yd^2) thereafter to verify application rates.

3.3.2 Testing: Provide testing for each sample.

3.3.2.1 Emulsified Asphalt Test: Conduct emulsified asphalt test. ASTM D 244 for conformance to ASTM D 977, ASTM D 2397 and ISSA 102.

3.3.2.2 Aggregate Test: Conduct aggregate test. ASTM C 131 for Los Angeles abrasion; ASTM C 128 specific gravity and absorption; and ASTM C 29 unit weight.

3.3.2.3 Aggregate and Mineral Filler Test: Conduct aggregate and mineral filler test. ASTM C 136 for gradation; ASTM C 117 for material finer than No. 200 sieve; ASTM D 2419 for sand equivalent.

3.3.2.4 Asphalt Slurry Mix Test:

a. Asphalt Slurry Mix Design: ASTM D 3910 for conformance to laboratory mix; ASTM D 2172 for residual asphalt. Variations from approved laboratory mix shall not exceed the following tolerances:

Aggregate Size	Tolerances (Percent %)
1 cm (3/8 in) and No. 4	plus or minus 7
No. 8 and No. 16	plus or minus 6
No. 30 and No. 50	plus or minus 5
No. 100	plus or minus 4
No. 200	plus or minus 2

Slurry consistency	plus or minus 25
Asphalt cement	plus or minus 1
Water content	plus or minus 1

b. Application Rate: Verify by weighing in-place samples.

***** END OF SECTION *****

SECTION 32 11 24

GRADED CRUSHED AGGREGATE BASE COURSE FOR FLEXIBLE PAVEMENT

PART I - GENERAL

1.1 REFERENCES: The publications listed below form a part of this specification to the extent referenced. The publications are referred to in the text by the basic designation only. The latest edition of the referenced publications shall govern.

1.1.1 PUBLICACIONES DEL MINISTERIO DE FOMENTO (MF)

PG3, Art. 510	Pliego de Prescripciones Tecnicas Generales para Obrasde Carreteras y Puentes. Zahorras Artificiales (Artificial Ballasts).

1.1.2 NORMAS DE ENSAYO DEL LABORATORIO DE CARRETERAS Y GEOTECNIA DEL MINISTERIO DE FOMENTO (NLT)

NLT 148	Toma de Muestras de Roca, Escorias, Grava, Arena, Filler y Bloques de Piedra Empleados como Materiales de Construcción de Carreteras
NLT 149	Resistencia al Desgaste de los Aridos por Medio de la Máquina de los Angeles
NLT 150	Análisis Granulométrico de Aridos Gruesos y Finos
NLT 152	Material que Pasa el Tamiz 0.080 UNE en los Aridos
NLT 156	Densidad Aparente de los Aridos

1.1.3 UNA NORMA ESPAÑOLA (UNE):

UNE 7050-1	Test Sieves and Test Sieving. Vocabulary
UNE 7050-2	Test Sieves. Metal Wire Cloth, Perforated Metal Plate and Electroformed Sheet. Nominal Size of Openings.
UNE 103510	Geotechnic. Compactation Test. Modified Proctor
UNE-EN 933-10	Tests for geometrical properties of aggregates. Part 10: Assessment of fines. Grading of fillers (air jet sieving)
UNE 103503	Determination "in situ" of density of soil by the sand method
UNE-EN 13242	Aggregates (Artificial Ballast) for Unbound and Hydraulically Bound Materials for Use in Civil Engineering Work and Road Construction

1.2 SUBMITTALS: Submit the following in accordance with Section 01 33 00, titled "SUBMITTALS PROCEDURES".

1.2.1 Field Test Reports: Provide field inspection and test reports for the following:

a. Gradation
b. Smoothness
c. Density
d. Thickness

1.3 DELIVERY AND STORAGE: Inspect materials delivered to site for damage and store as to prevent segregation and contamination.

1.4 WEATHER LIMITATIONS: Do not construct base course when atmospheric temperature is below 2° C (35° F) or when rainfall or other weather conditions detrimentally affect the quality of the finished course.

1.5 CONSTRUCTION EQUIPMENT: Equipment shall be dependable and adequate for the purpose intended. Maintain equipment in satisfactory and safe operating condition. Subject to approval, special equipment dictated by local conditions may be used. Calibrated equipment, such as scales, batching equipment, spreaders, and similar items, shall have been calibrated by an approved calibration laboratory within 12 months of commencing work.

PART II - PRODUCTS

All products specified in this section shall fulfill requirements indicated in PG-3 Code, Article 510-Capas Granulares ("Granular Aggregate Courses"), and requirements indicated in this section, whichever is stricter.

2.1 ARTIFICIAL BALLAST (Zahorra artificial)

Clean, coarsely graded natural gravel, crushed limestone or a combination of thereof, meeting PG-3 Chapter 510. To be used as base and sub-base in asphalt pavements, and where indicated in drawings. Particle sizes to adjust to the following:

Table 510.1

	ZA-40 SUB-BASE COURSE	ZA-25 BASE COURSE
UNE	Sieve % accumulated	Sieve % accumulated
40	100	--
25	75-100	100
20	60-90	75-100
10	45-70	50-80
5	30-50	35-60
2	16-32	20-40
400 µm	6-20	8-22
80 µm	0-10	0-10

Percentage of material passing through the no. 80 microns sieve shall be less than 2/3 of those passing through the no. 400 microns sieve.
Plasticity index to be 0. Module of elasticity (plaste loading test NLT-375 to be 80 MPa minimum for subbase and 100 MPa minimum for base.

PART III - EXECUTION

Execution of work specified in this section for artificial ballast base and sub-base shall fulfill requirements indicated in PG-3 Code, Article 510.3 “Works Execution”, and requirements indicated in this section, whichever is stricter.

3.1 AGGREGATE BASE COURSE: Construct the graded aggregate ZA-20 base course on a prepared subgrade or previously constructed ZA-40 sub-base course, as indicated. Provide line and grade stakes for control. Place grade stakes in lanes parallel to the centerline of areas to be paved and space for string lining or other control methods. The base course shall consist of aggregate processed, deposited, spread, and compacted on a prepared surface. The Contractor shall be responsible for protection of completed areas against detrimental effects. Recondition, reshape, and re compact areas damaged by freezing, rainfall, or other weather conditions.
3.2 PREPARATION OF UNDERLYING COURSE: Prior to constructing the aggregate base course, the underlying course shall be cleaned of all foreign substances. The surface of the underlying course or subgrade shall meet specified compaction and surface tolerances. The underlying course shall conform to Section 31 23 00.00 20 EXCAVATION AND FILL .

3.3 MIXING OF MATERIALS: Mix aggregates in a stationary or traveling plant. Proportion aggregates by weight or volume in such quantities that specified gradation, liquid limit, and plasticity index requirements are met after the base course has been placed and compacted. Incorporate, during the mixing operation, water in quantities sufficient to provide the necessary moisture content for the specified compaction. Mixing operations shall produce satisfactory uniform blending and the method of discharging into trucks shall not produce segregation.

3.4 PLACING: Do not dump mixed materials in piles, but place on prepared subgrade or subbase in layers of uniform thickness with a spreader. When a compacted course 15 cm (6 in) in thickness is required, place material in a single layer. When a compacted course in excess of 15 cm (6 in) is required, place material in layers of equal thickness. Do not exceed 15 cm (6 in) or have less than 7.5 cm (3 in) in thickness for any compacted layer. Place layers so that when compacted, they will be true to grades or levels required with the least possible surface disturbance. Where the base course is constructed in more than one layer, clean previously constructed layers of loose and foreign matter. Maintain material water content during the placing period to obtain the compaction specified. Make adjustments in placing procedures or equipment to obtain true grades, to minimize segregation and degradation, to reduce or increase water content, and to insure a satisfactory base course.

3.4.1 Stationary-Plant Method: Mix aggregates, binder material and water until a uniform homogeneous mixture is obtained. Do not dump materials in piles; place in layers of essentially uniform thickness, not to exceed 15 cm (6 in) after compaction, by an approved spreader. Tail gate spreading will be acceptable only with permission, under conditions such as where space limitations prohibit use of the spreader.

3.4.2 Windrow Traveling-Plant Method: Place aggregates and binder materials in windrows of such cross section and proportions that, when picked up, mixed, and redeposited in windrows, the finished mixture shall conform to the specified requirements. Do not exceed the rated capacity of the traveling plant with the size of the windrow of the combined materials. Add water, in quantity sufficient to provide the necessary moisture content for compacting, to the aggregates at the time of mixing. Mix materials uniformly by the traveling plant, deposit in windrows of uniform cross section, and spread in a layer of uniform thickness to the required contour and grades.

3.5 COMPACTING AND FINISHING: Immediately following the placing, spread the finished mixture uniformly in a layer and bring to optimum moisture content. The loose thickness and the surface of the layer shall be such that the specified density and the required thickness shall be obtained after compaction. Compact the layer with steel-faced, vibrating or pneumatic-tired rollers, or other suitable compacting equipment or combinations thereof. Continue compacting until the layer is compacted through the full depth to a field density of at least 100 percent of the maximum density at optimum moisture content for the base ZA-25 and 98% for the sub-base ZA-40, tested in accordance with UNE 103503 (PG-3, Art. 500.3.3) . In areas not accessible to rollers or compactors, compact the mixture with mechanical hand tampers. If the mixture is excessively moistened by rain, aerate by blade graders, or other suitable equipment. Aerate until the moisture content of the material is that needed to obtain the required density. Finish the surface of the layer by a combination of rolling and blading. Final surface shall be smooth and free from waves, irregularities, and ruts or soft yielding spots.

3.6 PROOF ROLLING: On the center 7.5 meters (25 feet) of taxiways and on the center 30 meters (100 feet) of runways, in addition to compacting the base course to the required density, proof roll the top surface of the completed base course by

making eight coverages with a heavy rubber-tired roller having four tires with each tire loaded to 13,500 Kg. (30,000 pounds) or more and inflated to at least 10.5 Kg/cm^2 (150 psi). Make four coverages over other areas to be paved, excluding the runway over-runs, blast protection areas, and shoulders. A coverage is defined as one application of one tire print over each point in the surface of the designated area. When under the action of the proof rolling, the base course yields, pumps, or otherwise fails, remove, replace with suitable materials, and recompact materials in the base course or in the underlying layers indicated to be unsatisfactory. The speed of the roller shall not exceed 8 Km per hour (5 miles per hour). Obtain approval upon completion of the proof rolling of the base course.

3.7 FINISHING AT EDGES OF BASE COURSE: Place earth or other approved materials along the edges of the base course in such quantity that it will compact to the thickness of the course being constructed. When the course is being constructed in two or more layers, place material to the thickness of each layer. In each operation, allow at least a 30 cm (1 foot) width of the shoulder to be rolled and compacted simultaneously with the rolling and compacting of each layer.

3.7 FIELD QUALITY CONTROL: Approve materials and material sources in advance of the use of such materials in the work. Replace base where samples are removed.

3.7.1 Sampling

3.7.1.1 Aggregates at the Source: Prior to production and delivery of aggregates, take at least one initial sample in accordance with NLT-148 (PG-3, Art. 533.9.1)**.** Collect each sample by taking three incremental samples at random from the source material to make a composite sample of not less than 23 Kg. Repeat above sampling when source of material is changed or when unacceptable deficiencies or variations from specified grading of materials are found in testing.

3.7.1.2 During Construction: Take one random sample from each 100 tons of completed course material, but not less than one random sample per day's run. Take samples in accordance with NLT-148 (PG-3, Art. 533.9.1).

3.7.1.3 Sample Identification: Place each sample in a clean container, securely fastened to prevent loss of material. Tag each sample for identification and with the following information:

Contract No.
Sample #_____ Quality
Date of Sample
Sampler
Source
Intended Use
For Testing

3.7.2 Testing:

3.7.2.1 Aggregates Test each sample of base course material without delay. Make gradation tests from each sample in accordance with NLT-150 (PG-3, Art. 533.9.1). Make sieve analysis on material passing the UNE 0.08 sieve in accordance with UNE-EN 933-10**.**

3.7.2.2 Smoothness Tests: Test with a 3 meter straightedge, applied parallel with and at right angles to the center line of the paved area. Correct deviations in the surface in excess of 10 mm by loosening, adding or removing material, reshaping, watering, and compacting. The smoothness requirements specified herein apply only to the top layer when base course is constructed in more than one layer.

3.7.2.3 Field Density Tests: UNE 103503. Take one test for each 400 square meters of each layer of base course.

3.7.2.4 Laboratory Density Tests: In accordance with UNE 103510.

3.7.2.5 Thickness Tests: Measure thickness of base course at intervals such that there will be a depth measurement for at least each 400 square meters of complete base course. Make depth measurements by test holes, at least 75 mm in diameter, through the base course. Where base course deficiency is more than 13 mm, correct by scarifying, adding mixture of proper

gradation, reblading, and recompacting. Where the measured thickness is more than 13 mm thicker than indicated, consider it as the indicated thickness plus 13 mm for determining the average. The average thickness is the average of the depth measurements and shall not underrun the thickness indicated.

3.8 MAINTENANCE: After construction is completed, maintain the base course throughout, except where portion of the succeeding course is under construction thereon. Maintenance includes drainage, rolling, shaping, and watering, as necessary, to maintain the course in proper condition. Correct deficiencies in thickness, composition, construction, smoothness, and density, which develop during the maintenance, to conform to the requirements specified herein. Maintain sufficient moisture by light sprinkling with water at the surface to prevent a dusty condition.

***** END OF SECTION *****

SECTION 32 12 10

BITUMINOUS TACK COATS AND PRIME COATS

PART 1 - GENERAL

1.1 REFERENCES

The publications listed below form a part of this specification to the extent referenced. The publications are referred to in the text by the basic designation only.

1.1.1. NORMAS DE ENSAYO DEL CENTRO DE ESTUDIOS DE CARRETERAS Y EL LABORATORIO DE GEOTECNIA DEL CEDEX (NLT)

NLT 121	Toma de Muestras de los Materiales Bituminosos

1.1.2. MINISTERIO DE FOMENTO (MF)

MF PG-3, Ast. 212	Pliego de Prescripciones Técnicas Generales para Obras de Carreteras y Puentes. Betunes Fluidificados para Riegos de Imprimacion.

1.1.3. MINISTERIO DE TRABAJO Y ASUNTOS SOCIALES (MTAS)

MTAS-ORD	Reglamento de Seguridad e Higiene en el Trabajo de la Industria de la Construcción

1.2 SUBMITTALS

Submit the following in accordance with Section 01 33 00, "SUBMITTAL PROCEDURES."

a. Product Data

b. Emulsified asphalt

Submit temperature viscosity relationship.

1.3 ENVIRONMENTAL REQUIREMENTS

Apply the prime coat only when the surface is dry or contains moisture not in excess of the amount that will permit uniform distribution and the desired penetration. Apply the prime coat only when the ambient temperature is 10 degrees C or above and when the temperature has not been below 1.7 degrees C for 12 hours immediately prior to application, unless otherwise directed.

1.4 SAFETY REQUIREMENTS

Perform the work in accordance with MTAS-ORD safety regulations.

1.5 PLANT, EQUIPMENT, MACHINES AND TOOLS

1.5.1 General Requirements

Plant, equipment, machines and tools used in the work are subject to approval and must be maintained in satisfactory working condition and safe operating condition at all times. Calibrated equipment such as asphalt distributors, scales, batching equipment, spreaders and similar equipment, shall have been recalibrated by an approved calibration laboratory within 12 months prior to commencing work and every six months thereafter, by such laboratory from the date of recalibration, during the term of the contract.

1.5.2 Bituminous Distributor

Bituminous distributor shall have pneumatic tires of such width and number that the load produced on the base surface shall not exceed 295 kg per 25 mm of tire width. The bituminous distributor shall be designed and equipped to distribute the bituminous material uniformly at even heat on variable widths of surface at readily determined and controlled rates from 0.23 to 9.05 liters per square meter, with a pressure range of 172.4 to 517.1 kPa and an allowable variation not to exceed 5 percent from any specified rate. Distributor equipment shall include a separate power unit for the bitumen pump, full-circulation spray bars, tachometer, pressure gauges, volume-measuring devices, adequate heaters for heating the materials to the proper application temperature, a thermometer for reading the temperature of the tank contents, and a hose and spray nozzle attachment for applying bituminous material to spots unavoidably missed by the distributor and to areas inaccessible to the distributor. The distributor shall be equipped to circulate and agitate the bituminous material during the heating process.

1.5.3 Heating Equipment for Storage Tanks

The equipment for heating the bituminous material shall be steam, electric or hot oil heaters. Steam heaters shall consist of steam coils and equipment for producing steam, so designed that the steam cannot get into the material. An armored thermometer with a temperature range from 4.4 to 204.4 degrees C shall be fixed to the tank so that the temperature of the bituminous material may be determined at all times.

1.5.4 Power Brooms and Power Blowers

Use power brooms and power blowers suitable for cleaning the surfaces to which the bituminous coat is to be applied.

1.6 WEATHER LIMITATIONS

Apply bituminous coat only when the surface to receive the bituminous coat is dry. Apply bituminous coat only when the atmospheric temperature in the shade is 10 degrees C (50 degrees F) or above and when the temperature has not been below 2 degrees C (35 degrees F) for the 12 hours prior to application, unless otherwise directed by the Contracting Officer.

1.7 DELIVERY, STORAGE, AND HANDLING

Inspect the materials delivered to the site for contamination and damage. Unload and store the materials with a minimum of handling.

PART 2 - PRODUCTS

2.1 BITUMINOUS MATERIAL

2.1.1 Emulsified Asphalt

MF PG-3, "Emulsiones Asfálticas" Type EAR-1.

Characteristics	Regulation NLT	EAR-1 Min	Max Viscosity Saybolt
Furol at 25ºC	138	-	50
Water content	137	-	40
Residual asphalt content	139	60	-
Sedimentation	140	-	5
Stability(35cm3 Cl2CA 0,02N)	141	60	-
Penetration (25ºC; 100g.;5s)		130	200
	124	60	100
Ductility	126	40	-

PART 3 - EXECUTION

3.1 SURFACE PREPARATION

Immediately before applying the tack coat, remove loose material dirt, and other objectionable material from the surface to be coated. After the cleaning operation and prior to the application of the tack coat, examine the area to be coated. Ensure that the area is fit to receive the bituminous coating material.

3.2 APPLICATION

Immediately following the surface preparation, apply the bituminous material by means of the bituminous distributor. Apply the bituminous material at a pressure range of 172.4 to 517.1 kPa within the temperature limits specified herein, and at neither the rate of not less than 0.91 liter nor more than 1.36 liters of bituminous material per square meter. Apply the bituminous material so that uniform distribution is obtained over the entire surface to be treated. Unless the distributor is equipped to obtain satisfactory results at the junction of previous and subsequent applications, spread building paper on the surface of the applied material for a sufficient distance back from the ends of each application, so that flow from the sprays may be started and stopped on the paper, and so that all sprayers will operate at full force on the surface to be treated. Immediately after the application, remove the building paper and apply bituminous material to spots missed by the distributor.

3.2.1 Application Temperature for Emulsified Asphalt

Between 23.9 and 54.4 degrees C.

3.3 TRAFFIC CONTROLS

Keep traffic off surfaces freshly treated with bituminous material. Provide sufficient warning signs and barricades so that traffic will not travel over freshly treated surfaces.

-- End of Section --

SECTION 32 12 11

BITUMINOUS SURFACE TREATMENT

PART I - GENERAL

1.1 GENERAL REQUIREMENTS: The work includes providing a single bituminous surface treatment on existing pavement surface. The bituminous surface treatment shall consist of a single application of bituminous material covered with mineral aggregate and rolled to a smooth, even textured surface. Rolling operations shall be accomplished with pneumatic tired rollers; steel-wheeled rollers may be used in a supplementary capacity only.

1.2 REFERENCES: The publications listed below form a part of this specification to the extent referenced. The publications are referred to in the text by the basic designation only. The latest edition of the referenced publications shall govern.

1.2.1 AMERICAN SOCIETY FOR TESTING AND MATERIALS (ASTM):

ASTM C 29/C 29M	Unit Weight and Voids in Aggregate
ASTM C 88	Soundness of Aggregates by Use of Sodium Sulfate or Magnesium Sulfate
ASTM C 131	Resistance to Degradation of Small-Size Coarse Aggregate by Abrasion and Impact in the Los Angeles Machine
ASTM C 136	Sieve Analysis of Fine and Coarse Aggregates
ASTM D 75	Sampling Aggregates
ASTM D 140	Sampling Bituminous Materials
ASTM D 448	Sizes of Aggregate for Road and Bridge Construction
ASTM D 946	Penetration-Graded Asphalt Cement for Use in Pavement Construction
ASTM D 977	Emulsified Asphalt
ASTM D 1139	Crushed Stone, Crushed Slag, and Gravel for Single or Multiple Bituminous Surface Treatments
ASTM D 1369	Quantities of Materials for Bituminous Surface Treatments
ASTM D 1664	Coating and Stripping of Bitumen-Aggregate Mixtures
ASTM D 2027	Cutback Asphalt (Medium-Curing Type)
ASTM D 2028	Cutback Asphalt (Rapid-Curing Type)
ASTM D 2397	Cationic Emulsified Asphalt

ASTM D 3381	Viscosity Graded Asphalt Cement for Use in Pavement Construction

1.2.2 NORMAS DE ENSAYO DEL LABORATORIO DE CARRETERAS Y GEOTECNIA DEL MOPU (NLT):

NLT-121	Toma de Muestras de Materiales Bituminosos
NLT-124	Penetracion de Materiales Bituminosos
NLT-126	Ductilidad de Materiales Bituminosos
NLT-130	Solubilidad en Disolventes Organicos de Materiales Bituminosos
NLT-137	Agua en Emulsion Bituminosos
NLT-138	Viscosidad Saybolt de Emulsiones Bituminosos
NLT-140	Sedimentacion en las Emulsiones Bituminosos
NLT-142	Tamizado de las Emulsiones Bituminosos

1.2.3 CENTRO DE PUBLICACIONES DEL MINISTERIO DE FOMENTO (MF):

PG-3, Art. 540	Pliego de Prescripciones Tecnicas Generales para Obras de Carreteras y Puentes. Tratammientos Superficiales con Lechada Bituminosa
PG-3, Art. 213	Pliego de Prescripciones Tecnicas Generales para Obras de Carreteras Y Puentes. Emulsiones Asfalticas

1.2.4 CORPS OF ENGINEERS (COE):

COE EM-385-1-1	Safety and Health Requirements Manual

1.3 SUBMITTALS: Submit the following in accordance with Section 01 33 00, titled "SUBMITTALS PROCEDURES."

1.3.1 Manufacturer's Catalog Data: Provide manufacturer's descriptive catalog data for the following:

a. Cutback asphalt
b. Asphalt cement
c. Submit the temperature-viscosity relationship of the cutback asphalt and asphalt cement.

1.3.2 Test Reports: Provide copies of test reports, indicating compliance with the contract requirements, for the following:

a. Aggregate
b. Bituminous material

1.3.3 Samples: Provide material samples of the following:

a. Aggregate
b. Bituminous material

1.3.3.1 From each source of supply, submit a 3.79 liter (1 gallon) sample of bituminous material and a 22.68 Kg (50 pound) sample of aggregate for each aggregate source.

1.4 DELIVERY AND STORAGE: Inspect the materials delivered to the site for contamination and damage. Unload and store the materials with a minimum of handling. Store aggregates in such a manner as to prevent segregation and contamination.

1.5 WEATHER LIMITATIONS: Apply the bituminous surface treatment only when the surface is dry or contains moisture not in excess of the amount that will permit niform distribution and the desired adhesion. Apply the bituminous surface treatment only when the atmospheric temperature is above 15.5^{o} C (60° F) in the shade and when the pavement surface temperature is 15.5^{o} C (60° F) or higher, unless otherwise directed. Apply the bituminous surface treatment only when the wind velocity will not prevent the uniform application of the cover aggregate.

PART II - PRODUCTS

2.1 MATERIALS

2.1.1 Aggregate: Mineral aggregate shall conform to ASTM D 1139, aggregate size 9; shall consist of crushed stone, crushed gravel, or crushed slag; shall be free from adherent films of clay or dust; and shall be of such nature that a thorough coating of the bituminous material used in the work will not strip off when tested in accordance with ASTM D 1664. The aggregate shall be sufficiently free of moisture to enable it to be readily coated with bituminous material. The gradation of the aggregates shall conform to the following:

GRADATION OF AGGREGATES

Percent by Weight Passing Square Mesh Laboratory Sieve (ASTM D 448)

Sieve Size	Percent Passing %
1-inch (25.0 mm)	-
3/4-inch (19.0 mm)	-
1/2-inch (12.5 mm)	-
3/8-inch (9.5 mm)	100
No. 4 (4.75 mm)	85-100
No. 8 (2.36 mm)	10-40
No. 16 (1.18 mm)	0-10
No. 50 (.300 mm)	0-5

2.1.2 Bituminous Materials:

2.1.2.1 Cutback Asphalt: Rapid curing cutback asphalt shall conform to ASTM D 2028, Designation RC-250.

2.1.2.2 Emulsified Asphalt: Rapid-setting emulsified asphalt shall conform to ASTM D 977, Grade RS-1 or RS-2; or MOPU PG-3, Article 213, Type ECL-1.

2.1.2.3 Asphalt Cement: Asphalt cement shall conform to ASTM D 946, Penetration Grade 200-300 or ASTM D 3381, Viscosity Grade AC-10.

2.1.3 Crack Sterilant: Bromacil, diuron, monuron-TCA, or prometon. Apply crack sterilant in liquid form, and at highest allowable concentration rate indicated on the label.

2.1.4 Crack Sealant: FS SS-S-1401 or a mixture of slurry seal aggregate passing the No. 8 sieve, slurry seal emulsified asphalt at 20 percent by dry weight of aggregate, and sufficient water to allow the mixture to flow into the crack.

2.2 CONSTRUCTION EQUIPMENT: Provide equipment dependable and adequate for the purpose intended and properly maintained in satisfactory and safe operating condition at all times. Discontinue the use of equipment which fails to produce satisfactory work and replace with satisfactory equipment. Calibrated equipment such as asphalt distributors, scales, batching equipment, spreaders and similar equipment, shall have been calibrated by an approved calibration laboratory within 12 months prior to commencing work and every 6 months thereafter, by such laboratory from the date of recalibration, during the term of the contract.

2.2.1 Bituminous Distributor: The bituminous distributor shall be designed and equipped to distribute the bituminous material uniformly at even heat on variable widths of surface at readily determined and controlled rates from 0.23 to 9.05 liters per square meter (0.05 to 2.0 gallons/yd^2), with a pressure range of 1.72 to 5.2 Kg.cm^2 (25 to 75 psi) and an allowable variation not to exceed 5 percent from any specified rate. Distributor equipment shall include a separate power unit for the bitumen pump, full-circulation spray bars, tachometer, pressure gauges, volume-measuring devices, adequate heaters for heating the materials to the proper application temperature, a thermometer for reading the temperature of the tank contents, and a hose and spray nozzle attachment suitable for applying bituminous material manually to spots unavoidably missed by the distributor and to areas inaccessible to the distributor. The distributor shall be equipped to circulate and agitate the bituminous material during the heating process.

2.2.2 Single Pass Surface Treatment Machine: The surface treatment machine shall be capable of distributing the bituminous material uniformly at even heat and in controlled amounts and immediately spreading aggregates uniformly in controlled amounts in a single pass operation over the surface to be sealed.

2.2.3 Heating Equipment for Storage Tanks: The equipment for heating the bituminous material shall be steam, electric, or hot oil heaters. Steam heaters shall consist of steam coils and equipment for producing steam, so designed that the steam cannot get into the material. An armored thermometer with a range from 37.8^o C (100° F) to 148.9^o C (300° F) shall be fixed to the tank so that the temperature of the bituminous material may be determined at all times.
2.2.4 Cleaning and Auxiliary Equipment: ASTM D 3910.

2.2.5 Crack Sealing Equipment: Truck or trailer mounted pressure applicators for dispensing hot or cold applied sealing materials. Equip with nozzles of size and shape needed to convey the sealing materials into the crack opening.

2.2.6 Aggregate Spreading Equipment: Adjustable and capable of spreading aggregate at controlled amounts per square meter.

2.2.7 Power Rollers: Self-propelled tandem and three-wheel type rollers, weighing not less than 4.54 metric tons (5 tons) and suitable for rolling bituminous pavements. The wheels of the rollers shall be equipped with adjustable scrapers. The rollers shall be equipped with water tanks and sprinkling apparatus for keeping the wheels wet in order to prevent adherence of the bituminous material to the wheels.

2.2.8 Self-propelled Pneumatic-tired Rollers: The rollers shall have a total compacting width of not less than 1.52 meters (5 feet). The gross weight shall be adjustable within 3,572 to 6,250 kg/m^2 (200 to 350 psi) of compacting width.

2.2.9 Broom Drags: Brooms mounted on a frame, designed to spread fine aggregate uniformly over the surface of a bituminous pavement, and equipped with pull plates for towing. Towing equipment shall have pneumatic tires.

2.2.10 Brooms and Blowers Power type and suitable for cleaning bituminous pavement surfaces.

PART III - EXECUTION

3.1 CONSTRUCTION PROCEDURE:

3.1.1 Surface Preparation: Immediately before applying the bituminous material, clean the surface of all loose material, dirt, vegetation, paint, rubber deposits, oil, grease, and other objectionable material. When approved, high-pressure water may be used for the removal of traffic paint and for cleaning surface. Remove water puddles by sweeping. Allow the surface to dry after flushing. Obtain surface preparation approval prior application of bituminous surface treatment.

3.1.2 Crack Preparation: Prior to surface cleaning, sterilize, clean, and seal cracks 0.6 cm (1/4 in) wide and larger.

3.1.2.1 Cleaning: Clean and blow out cracks using compressed air.

3.1.2.2 Sterilizing: Apply crack sterilant in accordance with manufacturer's instructions. Saturate crack to the point of runoff.

3.1.2.3 Sealing: Fill cracks 0.6 cm (1/4 in) wide and larger with crack sealant flush to the surface; remove excess crack sealant from pavement surface. Permit crack sealant to cure prior to surface cleaning.

3.1.3 Oil Removal: Remove surface oil and grease by scrubbing with an approved detergent and water. Flush surface free of detergent.

3.1.4 Protective Coverings: Prior to slurry sealing, apply protective coverings over utility covers, ground mounted light fixtures including bases, curbs, and gutters. After slurry sealing, remove protective coverings.

3.1.5 Application of Bituminous Material: Apply the bituminous material with a bituminous distributor at temperature, pressure, and rate within the limits specified in TABLE I herein. Distribute the bituminous material uniformly over the surface to be treated. Spread building paper on the surface a sufficient distance back from the ends of each application so that the flow through the nozzles may be started and stopped on the paper and so that all nozzles will be operating properly on the surface being treated. Remove and dispose of the building paper in a satisfactory manner. Treat all spots missed by the distributor with bituminous material from a pressure hose prior to the application of the mineral aggregate. During all applications, protect the surfaces of the adjacent buildings, structures, and trees in a manner to prevent their being spattered or marred.

3.1.5.1 Application Temperature of Cutback Asphalt: As necessary to provide an application viscosity between 40 and 120 centistokes, kinematic or 20 and 60 seconds, Saybolt Furol.

3.1.5.2 Application Temperature of Emulsified Asphalt: Application temperatures shall be within the following ranges:

RS-1: 21.1 - 60° C (70-140° F)
RS-2: 51.7 - 85° C (125-185° F)
CRS-1: 51.7 - 85° C (125-185° F)
CRS-2: 51.7 - 85° C (125-185° F)

3.1.5.3 Application Temperature of Asphalt Cement: As necessary to provide an application viscosity between 40 and 120 centistokes, kinematic or 20 and 60 seconds, Saybolt Furol.

3.1.6 Spreading and Rolling of Aggregates: Immediately following the application of bituminous material, spread the aggregates uniformly over the bituminous material with spreading equipment at a rate within the limits specified in TABLE I herein. Spread aggregates evenly by hand on all areas missed by the spreader. Operate trucks spreading aggregates backwards, so that the bituminous material will be covered ahead of the truck wheels. Backspot or sprinkle additional aggregate over areas having insufficient cover by hand whenever necessary. Roll the surface immediately after sufficient aggregate is spread to prevent pick-up of the bituminous material. Continue rolling and back-spotting until no more aggregate can be worked into the surface and a smooth thoroughly compacted surface is obtained. In all places not accessible to the rollers, secure the aggregate with tampers. Remove aggregates that become coated or mixed with dirt or any other foreign material, replace with clean aggregate, and reroll as necessary.

3.1.6.1 Brooming and Rolling: Immediately following the application of cover aggregate, begin the rolling operations. Accomplish rolling with pneumatic-tired rollers. Use steel wheeled rollers in a supplementary capacity only. Operate the

rollers at a speed that will not displace the aggregate. Broom drag the aggregate after the initial rolling if the aggregate is not properly distributed and keyed into the bituminous materials. Sweep and remove surplus aggregate off the surface not less than 24 hours or more than 4 days after rolling is completed.

TABLE I
APPLICATION RATES FOR BITUMINOUS MATERIAL AND AGGREGATE

a. Emulsified Asphalt:

QUANTITY OF MATERIAL PER SQUARE YARD OF SURFACE

Material	Unit	Quantity
Aggregate	Pounds	15 - 20
Bituminous Material	Gallons	0.15 - 0.25

QUANTITY OF MATERIAL PER SQUARE METER OF SURFACE

Material	Unit	Quantity
Aggregate	Kilograms	8 - 11
Bituminous Material	Liters	0.57 - 0.95

b. Asphalt Cement and Cutback Asphalt:

QUANTITY OF MATERIAL PER SQUARE YARD OF SURFACE

Material	Unit	Quantity
Aggregate	Pounds	15 - 20
Bituminous Material	Gallons	0.15 - 0.25

QUANTITY OF MATERIAL PER SQUARE METER OF SURFACE

Material	Unit	Quantity
Aggregate	Kilograms	8 - 14
Bituminous Material	Liters	0.57 - 0.95

3.2 The range of values for aggregate and bituminous material shall be adjusted for the project as directed by the Contracting Officer. Bids shall be based on the mean of the values in the table. The aggregate weights shown in the table are those of aggregates having a specific gravity of 2.65. If the specific gravity of the aggregate to be used is other than 2.65, appropriate adjustments shall be made in the number of kilograms of aggregate required per square meter (pounds of aggregate required per square yard) to ensure a constant volume of aggregate per square meter (square yard) of treatment.

3.3 PROTECTION: Keep all traffic off surfaces freshly treated with bituminous material. Provide sufficient warning signs and barricades so that traffic will not travel over freshly treated surfaces. Protect the treated areas from traffic for at least 24 hours after final application of bituminous material and aggregate, or for such time as necessary to prevent picking up. Immediately prior to opening to traffic, roll the entire treated area with a self-propelled pneumatic-tired roller.

***** END OF SECTION *****

SECTION 32 12 17

HOT MIX BITUMINOUS BITUMINOUS PAVEMENT

PART I - GENERAL

1.1 REFERENCES: The publications listed below form a part of this specification to the extent referenced. The publications are referred to in the text by the basic designation only. The latest edition of the referenced publications shall govern.

1.1.1 AMERICAN SOCIETY FOR TESTING AND MATERIALS (ASTM):

ASTM C29/C29M	Unit Weight and Voids in Aggregate

1.1.2 UNA NORMA ESPANOLA (UNE):

UNE 13043	Aggregates For Bituminous Mixtures And Surface Treatments For Roads, Airfields And Other Trafficked Areas.
UNE-EN 933-1	Tests For Geometrical Properties Of Aggregates - Part 1: Determination Of Particle Size Distribution - Sieving Method.
UNE-EN 933-2	Test For Geometrical Properties Of Aggregates. Part 2: Determination Of Particle Size Distribution. Test Sieves, Nominal Size Of Apertures.
UNE-EN 933-5	Test For Geometrical Properties Of Aggregates. Part 5: Determination Of Percentage Of Crushed And Broken Surfaces In Coarse Aggregate Particles.
UNE-EN 933-3/A1	Tests For Geometrical Properties Of Aggregates - Part 3: Determination Of Particle Shape - Flakiness Index.
UNE-EN 1097-2	Tests For Mechanical And Physical Properties Of Aggregates - Part 2: Methods For The Determination Of Resistance To Fragmentation.
UNE-EN 933-8	Tests For Geometrical Properties Of Aggregates. Part 8: Assessment Of Fines. Sand Equivalent Test.
UNE-EN 1097	Tests For Mechanical And Physical Properties Of Aggregates - Part 1: Determination Of The Resistance To Wear (Micro-Deval).

1.1.3 NORMAS DE ENSAYO DEL LABORATORIO DE CARRETERAS Y GEOTECNIA DEL MOPU (NLT):

NLT-121	Toma de Muestras de Materiales Bituminosos.
NLT-122	Densisdad Relativa de Materiales Bituminosos.
NLT 148	Toma de Muestras de Roca, Escorias, Grava, Arena, Filler y Bloques de Piedra Empleados como Materiales de Construccion de Carreteras.
NLT 149	Resistencia al Desgaste de los Aridos Por Medio de la Maquina de los Angeles
NLT 150	Analisis Granulometrico de Aridos Gruesos y Finos.

NLT-151	Analisis Granulometricos del Fill Mineral.
NLT 152	Material que Pasa el Tamiz 0.080 UNE en Los Aridos.
NLT-153	Densidad Relativa y Absorcion de Aridos Gruesos.
NLT-154	Densidad Relativa y Absorcion de Aridos Finos.
NLT-155	Densidad Relativa del Filler y Materiales Similares.
NLT 156	Densidad Aparente de los Aridos
NLT-157	Densidad Aparente del Filler.
NLT-158	Estabilidad de los Aridos a la Accion de las Soluciones de Sulfato Sodico o Magnesico.
NLT-159	Resistencia a la Deformacion Plastica De Mezclas Bituminosas empleando el Aparato Marshall.
NLT-162	Efecto del Agua sobre la Cohesion de Mezclas Bituminosas Compactadas.
NLT-165	Análisis granulométrico de los áridos extraídos de mezclas bituminosas.
NLT-168	Densidad y Huecos en Mezclas Bituminosas Compactadas.
NLT-174	Pulimento Acelerado de los Aridos.
NLT-172	Aridos. Determinación de la limpieza superficial.
NLT-176	Densidad aparente del polvo mineral.
NLT-311	Densidad Maxima de Compactacion.
NLT-354	Indice de Lajas y Agujas.

1.1.4 CENTRO DE PUBLICACIONES DEL MINISTERIO DE OBRAS PUBLICAS Y URBANISMO(MOPU):

PG-3, Art. 540-542	Pliego de Prescripciones Tecnicas Generales para Obras de Carreteras y Puentes. Mezclas Bituminosas

1.1.5 CORPS OF ENGINEERS (COE):

COE EM-385-1-1	Safety and Health Requirements Manual

1.2 SUBMITTALS: Submit the following in accordance with Section 01 30 00, titled "SUBMITTALS PROCEDURES".

1.2.1 Design Data:

1.2.1.1 Job-mix formula: Submit a job-mix formula, prepared within one year of submittal, for approval, by the Government, prior to preparing and placing the bituminous mixture. Design mix using procedures contained in Art. 542 of MF PG3. Formulas shall indicate physical properties of the mixes as shown by tests made by a commercial laboratory approved by the Contracting Officer, using materials identical to those to be provided on this project. Submit formulas with material samples. Job-mix formula for each mixture shall be in effect until modified in writing by the Contractor and approved by the Contracting Officer. Provide a new job-mix formula for each source change.

1.2.1.2 Required Data: Job-mix formula shall show the following:

a. Source and proportions, percent by weight, of each ingredient of the mixture;

b. Correct gradation, the percentages passing each size sieve listed in the specifications for the mixture to be used, for the aggregate and mineral filler from each separate source and from each different size to be used in the mixture and for the composite mixture;

c. Amount of material passing the UNE 0.080 sieve determined by dry sieving;

d. Number of blows of hammer compaction per side of molded specimen;

e. Temperature viscosity relationship of the asphalt cement;

f. Stability, flow, percent voids in mineral aggregate, percent air voids, unit weight;

g. Asphalt absorption by the aggregate;

h. Effective asphalt content as percent by weight of total mix;

I. Temperature of the mixture immediately upon completion of mixing;

j. Asphalt viscosity grade and/or penetration range; and

k. Curves for the binder and wearing courses.

1.2.1.3 Charts: Plot and submit, on a grain size chart, the specified aggregate gradation band, the job-mix gradation and the job-mix tolerance band.

1.2.1.4 Selection of Optimum Asphalt Content: Base selection on percent of total mix and the average of values at the following points on the curves for each mix:

a. Stability: Peak
b. Unit Weight: Peak
c. Percent Air Voids: Median

1.2.2 Test Reports:

a. Specific gravity test of asphalt
b. Coarse aggregate tests
c. Weight of slag test
d. Percent of crushed pieces in gravel
e. Fine aggregate tests
f. Specific gravity of mineral filler
g. Bituminous mixture tests

1.2.3 Samples:

a. Aggregate: Submit 10 Kg. sample of each gradation of aggregate from each source.

b Mineral Filler: Submit 10 Kg. sample of mineral filler.

c. Asphalt Cement: Submit 1 Kg. sample of asphalt cement.

1.2.3.1 All samples shall be submitted with the job-mix formula.

1.2.4 Certificates:

a. Bituminous Material: Submit for each shipment of bituminous material used in the mix.

1.3 DELIVERY, STORAGE, AND HANDLING: Inspect materials delivered to the site for damage and store with a minimum of handling. Store aggregates in such a manner as to prevent segregation, contamination, or intermixing of the different aggregate sizes.

1.4 ENVIRONMENTAL CONDITIONS: Place bituminous mixture only during dry weather and on dry surfaces. Place courses only when the surface temperature of the underlying course is greater than 7° C for course thicknesses greater than 2.5 cm (1 in) and 15° C for course thicknesses 2.5 cm or less.

1.5 CONSTRUCTION EQUIPMENT: Calibrated equipment, such as scales, batching equipment, spreaders and similar equipment, shall have been calibrated by a calibration laboratory approved by the Contracting Officer within 12 months of commencing work.

1.5.1 Mixing Plant: Design, coordinate, and operate the mixing plant to produce a mixture within the job-mix formula tolerances and to meet the requirements and plant requirements specified herein. The plant shall be a batch type, continuous mix type or drum-dryer mixer type, and shall have sufficient capacity to handle the new bituminous construction. Minimum plant capacity shall be 65 tons per hour. The mixing plant and equipment shall remain accessible at all times for inspecting operation, verifying weights, proportions and character of materials, and checking mixture temperatures.

1.5.1.1 Cold Aggregate Feeder: Provide plant with a feeder or feeders capable of delivering the maximum number of aggregate sizes required in their proper proportion. Provide adjustment for total and proportional feed and feeders capable of being locked in any position. When more than one cold elevator is used, feed each elevator as a separate unit and install individual controls integrated with a master control.

1.5.1.2 Dryer: Provide rotary drum-dryer which continuously agitates the mineral aggregate during the heating and drying process. When one dryer does not dry the aggregate to specified moisture requirements, provide additional dryers.

1.5.1.3 Plant Screens and Bins for Batch and Continuous Mix Plants: Use screen to obtain accurate gradation and allow no bin to contain more than 10 percent oversize or undersize. Inspect screens each day prior to commencing work for plugged, worn, or broken screens. Clean plugged screens and replace worn or broken screens with new screens prior to beginning operations. Divide hot aggregate bins into at least three compartments arranged to ensure separate and adequate storage of appropriate fractions of the aggregate.

1.5.1.4 Testing Laboratory: Provide a testing laboratory for control and acceptance testing functions during periods of mix production, sampling and testing, and whenever materials subject to the provisions of these specifications are being supplied or tested. The laboratory shall provide adequate equipment, space, and utilities as required for the performance of the specified tests.

1.5.2 Paving Equipment:

1.5.2.1 Spreading Equipment: Self-propelled electronically controlled type, unless other equipment is authorized, by the Contracting Officer. Equip spreading equipment of the self-propelled electronically controlled type with hoppers, tamping or vibrating devices, distributing screws, electronically adjustable screeds, and equalizing devices. Capable of spreading hot bituminous mixtures without tearing, shoving, or gouging and to produce a finished surface of specified grade and

smoothness. Operate spreaders, when laying mixture, at variable speeds between 1.5 and 15 meters (5-45 ft) per minute. Design spreader with a quick and efficient steering device; a forward and reverse traveling speed; and automatic devices to adjust to grade and confine the edges of the mixture to true lines. The use of a spreader that leaves indented areas or other objectionable irregularities in the fresh laid mix during operations is prohibited.

1.5.2.2 Rolling Equipment: Self-propelled pneumatic-tired rollers supplemented by three-wheel and tandem type steel wheel rollers. The number, type and weight of rollers shall be sufficient to compact the mixture to the required density without detrimentally affecting the compacted material. Rollers shall be suitable for rolling hot-mix bituminous pavements and capable of reversing without backlash. Pneumatic-tired rollers shall be capable of being operated both forward and backward without turning on the mat, and without loosening the surface being rolled. Equip rollers with suitable devices and apparatus to keep the rolling surfaces wet and prevent adherence of bituminous mixture. Vibratory rollers especially designed for bituminous concrete compaction may be used provided rollers do not impair stability of pavement structure and underlying layers. Repair depressions in pavement surfaces resulting from use of vibratory rollers.

1.5.2.2.1 Rollers shall be self-propelled, single or dual vibrating drums, and steel drive wheels, as applicable; equipped with variable amplitude and separate controls for energy and propulsion.

1.5.2.3 Hand Tampers: Minimum weight of 11 Kg. (25 pounds) with a tamping face of not more than 320 cm^2 (50 square in).

1.5.2.4 Mechanical Hand Tampers: Commercial type, operated by pneumatic pressure or by internal combustion.

PART II - PRODUCTS

2.1 AGGREGATES: Grade and proportion aggregates and filler so that combined mineral aggregate conforms to specified grading.

2.1.1 Coarse Aggregates: UNE 13043, except as modified herein. At least 75 percent by weight of aggregate retained on the UNE 100 sieve shall have two or more fractured faces. Percentage of wear, Los Angeles test, except for slag, shall not exceed 40 in accordance with NLT-149. Soundness test is required in accordance with NLT-148; after 5 cycles, loss shall not be more than 12 percent when tested with sodium sulfate or 18 percent when tested with magnesium sulfate.

2.1.2 Fine Aggregate: UNE 13043, except as modified herein. Fine aggregate shall be produced by crushing stone, slag or gravel that meets requirements for wear and soundness specified for coarse aggregate. Where necessary to obtain the gradation of aggregate blend or workability, natural sand may be used. Quantity of natural sand to be added shall be approved by the Contracting Officer and shall not exceed 15 percent of weight of coarse and fine aggregate and material passing the UNE 0.80 sieve.

2.1.3 Mineral Filler: Nonplastic material meeting the requirements of NLT-141.

2.2 ASPHALT CEMENT: MOPU PG-3, Article 211.1 "Betunes Asfalticos", penetration B 60/70.

2.3 GRADATION OF AGGREGATES: NLT-150. Aggregate shall have a gradation within the limits designated in Table I and shall not vary from the low limit on one sieve to the high limit on the adjacent sieve or vice versa, but grade uniformly from coarse to fine. Table I is based on aggregates of uniform specific gravity and the percentages passing the various sieves are subject to appropriate correction when aggregates of varying specific gravities are provided. When materials of different specific gravities are provided, make satisfactory arrangements for separate stock piles, controlled distribution, and other operations necessary to maintain the specific gravity of the mixture constant and uniform.

TABLE I
GRADATION OF AGGREGATES

TOTAL PERCENT PASSING (BY WEIGHT)

UNE Sieve Size (mm)	S20 Binder Course	D12 Wearing Course
25	100	-
20	80-95	100
12.5	65-80	80-95
10	60-75	72-87
5	43-58	50-65
2.5	30-45	35-50
0.63	15-25	18-30
0.32	10-18	13-23
0.16	6-13	7-15
0.080	3-7	4-8

2.4 Quantity of Bituminous Material: Mix asphalt cement with aggregates of corresponding mixes in the following proportions:

ASPHALT CEMENT PERCENT BY WEIGHT OF TOTAL MIX

Binder Course	Wearing Course
4-8	5-9

2.5 COMPOSITION OF MIXTURE: Gradation of mineral aggregate shall be as specified herein. The percentage of bituminous material provided in the bituminous mixtures shall be within the limits specified. Mixtures shall have the following physical properties:

Test Property	Values
Stability	Not less than 810 Kg. (1800 pounds)
Flow (0.25 mm)	Not more than 5.08 nor less than 10.16.
Percent Air Voids	Not less than 4 nor more than 9 for binder, leveling and base course; not less than 1.5 nor more than 2 for wearing course
Percent Voids in Mineral Aggregates	See Table II

TABLE II

MINIMUM PERCENT VOIDS IN MINERAL AGGREGATE (VMA)

UNE Sieve Designation (mm)	Minimum VMA Sieve (Percent)
5	18
10	16
12.5	15
20	14
25	13

2.5.1 Index of Retained Strength: NLT-162, 65 or greater.

2.6 VARIATIONS FROM FORMULA: Variations from the approved job-mix formula shall not exceed the following, and in no case shall the job-mix formula, with tolerances applied, fall outside the general limits for aggregate gradation and bituminous material specified herein:

Aggregate	Percent (%) Tolerance (+/-)
12.5 mm and larger	8%
10.0 mm and 5 mm	7%
2.5 mm and 1.25 mm	6%
0.63 mm and 0.32 mm	5%
0.125 mm	4%
0.080 mm	3%
Asphalt Cement	0.5%
Temperature of Mixture as discharged	6 degrees C

2.7 SOURCE QUALITY CONTROL: Use materials for testing that are identical to materials to be provided in this project. Employ a commercial laboratory approved by the Contracting Officer to perform testing.

2.7.1 Tests: Perform testing in accordance with the following:

a. Specific Gravity Test of Asphalt: NLT-122
b. Coarse Aggregate Tests:
   (1) Bulk Specific Gravity: NLT-153
   (2) Abrasion Loss: NLT-149
c. Weight of Slag Test: NLT-354 Indice de Lajas y Agujas ASTM C 29/C 29M
d. Percent of Crushed Pieces in Gravel: Count by observation and weight
e. Fine Aggregate Tests:
   (1) Bulk Specific Gravity: NLT-168
   (2) Soundness Loss: NLT-158
f. Specific Gravity of Mineral Filler: NLT-155
g. Bituminous Mixture Tests:
   (1) Bulk Specific Gravity: NLT-168
   (2) Theoretical Maximum Specific Gravity: NLT-311
   (3) Index of Retained Strength: NLT-162

2.7.2 Specimens: NLT-159 for the making and testing of bituminous specimens with the following exceptions:

a. Compaction: Apply 75 blows of the hammer to each flat face of the specimens.

b. Curves: Plot curves for the binder, and wearing courses to show the effect on the test properties of at least four different percentages of asphalt on the unit weight, stability, flow, air voids, and voids in mineral aggregate; each point on the curves shall represent the average of at least four specimens.

c. Cooling of Specimen: After compaction is completed, allow the specimen to cool in air to the same temperature approximately as that of the water, 25° C, to be used in the specific gravity determination.

PART III - EXECUTION

3.1 PREPARATION:

3.1.1 Mixing: Produce bituminous mixture in a plant as specified herein.

3.1.2 Preparation of Mineral Aggregates: Store different size aggregate in separate stockpiles so that different sizes will not mix. Stockpile different-sized aggregates in uniform layers by use of a clam shell or other approved method so as to prevent segregation. The use of bulldozers in stockpiling of aggregate or in feeding aggregate to the dryer is prohibited. Feed aggregates into the cold elevator by means of separate mechanical feeders so that aggregates are graded within requirements of the job-mix formulas and tolerances specified. Regulate rates of feed of the aggregates so that moisture content and temperature of aggregates are within tolerances specified herein. Dry and heat aggregates to the temperature necessary to achieve the mixture determined by the job mix formula within the job tolerance specified. Provide adequate dry storage for mineral filler.

3.1.3 Preparation of Bituminous Mixture: Accurately weigh aggregates and dry mineral filler and convey into the mixer in the proportionate amounts of each aggregate size required to meet the job-mix formula. Introduce required amount of asphalt into the mixer at a temperature not to exceed 163° C (325° F) so that the asphalt can mix uniformly with the aggregate. In batch mixing, after aggregates and mineral filler have been introduced into the mixer and mixed for not less than 15 seconds, add asphalt by spraying or other approved methods and continue mixing for a period of not less than 20 seconds, or as long as required to obtain a homogeneous mixture.

3.1.3.1 The time required to add or spray asphalt into the mixer will not be added to the total wet-mixing time provided the operation does not exceed 10 seconds and a homogeneous mixture is obtained. When a continuous mixer is employed, mixing time shall be more than 35 seconds to obtain a homogeneous mixture. Additional mixing time, when required, will be as directed by the Contracting Officer. Temperature of the mixture at the time of discharge shall not exceed 162° C. Temperature of the aggregate and mineral filler in the mixer shall not exceed 176° C when asphalt is added. When mixture is prepared in a twin-pugmill mixer, volume of the aggregates, mineral filler, and asphalt shall not extend above tips of mixer blades when blades are in a vertical position. Overheated and carbonized mixtures, or mixtures that foam or show indication of free moisture, will be rejected. When free moisture is detected in batch or continuous mix plant produced mixtures, waste the mix and withdraw the aggregates in the hot bins immediately and return to the respective stockpiles; for drum-dryer mixer plants, waste the mix, including that in surge or storage bins that is affected by free moisture.

3.1.4 Transportation of Bituminous Mixtures: Transport bituminous material from the mixing plant to the paving site in trucks having tight, clean, smooth beds that have been coated with a minimum amount of concentrated solution of hydrated lime and water or other approved coating to prevent adhesion of the mixture to the truck. Petroleum products will not be permitted for coating truck. If air temperature is less than 15° C or if haul time is greater than 30 minutes, cover each load with canvas or other approved material of ample size to protect the mixture from the loss of heat. Make deliveries so that the spreading and rolling of all the mixture prepared for one day's run can be completed during daylight, unless adequate approved artificial lighting is provided. Deliver mixture to area to be paved so that the temperature at the time of dumping into the spreader is within the range specified herein. Reject loads that are below minimum temperature, that have crusts of cold unworkable material, or that have been wet excessively by rain. Hauling over freshly laid material is prohibited.

3.1.5 Surface Preparation of Underlying Course: Prior to the laying of the asphalt concrete, clean underlying course of foreign or objectionable matter with power blowers or power brooms, supplemented by hand brooms and other cleaning methods where necessary. Remove grass and other vegetative growth from existing cracks and surfaces.

3.1.6 Spraying of Contact Surfaces:

3.1.6.1 Spray contact surfaces of compacted aggregate sub-base pavement with a thin coat of emulsified asphalt to act as an anti-stripping agent, conforming to Section 02743, titled "BITUMINOUS PRIME COAT" prior to placing the bituminous mixture. Application rate shall be as specified.

3.1.6.2 Spray contact surfaces of previously constructed pavement with a thin coat of emulsified asphalt to act as an anti-stripping agent, conforming to Section 02744, titled "BITUMINOUS TACK COAT" prior to placing the bituminous mixture. Application rate shall be as specified.

3.1.6.2.1 Re-apply a thin coat of emulsified or cutback asphalt to previously placed primed coats when surface has become excessively dirty and cannot be cleaned or when primed surface has cured to the extent that it has lost all bonding effect.

3.2 PLACEMENT:

3.2.1 Machine Spreading: The range of temperatures of the mixtures at the time of spreading shall be between 121° C and 149° C. Bituminous concrete having temperatures less than minimum spreading temperature when dumped into the spreader will be rejected. Adjust spreader and regulate speed so that the surface of the course is smooth and continuous without tears and pulling, and of such depth that, when compacted, the surface conforms with the cross section, grade, and contour indicated. Unless otherwise directed, begin the placing along the centerline of areas to be paved on a crowned section or on the high side of areas with a one-way slope. Place mixture in consecutive adjacent strips having a minimum width of 3 meters (10 ft) except where the edge lanes require strips less than 3 meters to complete the area. Construct longitudinal joints and edges to true line markings. Establish lines parallel to the centerline of the area to be paved, and place string lines coinciding with the established lines for the spreading machine to follow.Provide the number and location of the lines needed to accomplish proper grade control. When specified grade and smoothness requirements can be met for initial lane construction by use of an approved long ski-type device of not less than 9 meters (30 ft) in length and for subsequent lane construction by use of a short ski or shoe, in-place string lines for grade control may be omitted. Place mixture as nearly continuous as possible and adjust the speed of placing as needed to permit proper rolling.

3.2.2 Shoveling, Raking, and Tamping After Machine-Spreading: Shovelers and rakers shall follow the spreading machine. Add or remove hot mixture and rake the mixture as required to obtain a course that when completed will conform to requirements specified herein. Broadcasting or fanning of mixture over areas being compacted is prohibited. When segregation occurs in the mixture during placing, suspend spreading operation until the cause is determined and corrected. Correct irregularities in alinement left by the spreader by trimming directly behind the machine. Immediately after trimming, compact edges of the course by tamping laterally with a metal lute or by other approved methods. Distortion of the course during tamping is prohibited.

3.2.3 Hand-Spreading in Lieu of Machine-Spreading: In areas where the use of machine spreading is impractical, spread mixture by hand. The range of temperatures of the mixtures when dumped onto the area to be paved shall be between 122° C and 157° C. Mixtures having temperatures less than minimum spreading temperature when dumped onto the area to be paved will be rejected. Spread hot mixture with rakes in a uniformly loose layer of a thickness that, when compacted, will conform to the required grade, thickness, and smoothness. During hand spreading, place each shovel full of mixture by turning the shovel over in a manner that will prevent segregation. Do not place mixture by throwing or broadcasting from a shovel. Do not dump loads any faster than can be properly handled by the shovelers and rakers.

3.3 COMPACTION OF MIXTURE: Compact mixture by rolling. Begin rolling as soon as placement of mixture will bear rollers. Delays in rolling freshly spread mixture shall not be permitted. Start rolling longitudinally at the extreme sides of the lanes and proceed toward center of pavement, or toward high side of pavement with a one-way slope. Operate rollers so that each trip overlaps the previous adjacent strip by at least 30 cm (1 ft). Alternate trips of the roller shall be of slightly different lengths. Conduct tests for conformity with the specified crown, grade and smoothness immediately after initial rolling. Before continuing rolling, correct variations by removing or adding materials as necessary. If required, subject course to diagonal rolling with the steel wheeled roller crossing the lines of the previous rolling while mixture is hot and in a compactible condition. Speed of the rollers shall be slow enough to avoid displacement of hot mixture. Correct displacement of mixture immediately by use of rakes and fresh mixture, or remove and replace mixture as directed. Continue rolling until roller marks are eliminated and course has a density of at least 96 percent but not more than 100 percent of that attained in a laboratory specimen of the same mixture prepared in accordance with NLT-160. During rolling, moisten wheels of the rollers enough to prevent adhesion of mixture to wheels.

3.3.1 Operation of rollers shall be by competent and experienced operators. Provide sufficient rollers for each spreading machine in operation on the job and to handle plant output. In places not accessible to the rollers, compact mixture thoroughly with hot hand tampers. Skin patching of an area after compaction is prohibited. Remove mixture that becomes mixed with foreign materials or is defective and replace with fresh mixture compacted to the density specified herein. Roller shall pass over unprotected edge of the course only when laying of course is to be discontinued for such length of time as to permit mixture to become cold.

3.4 JOINTS: Joints shall present the same texture and smoothness as other portions of the course, except permissible density at the joint may be up to 2 percent less than the specified course density. Carefully make joints between old and new

pavement or within new pavements in a manner to ensure a thorough and continuous bond between old and new sections of the course. Vertical contact surfaces of previously constructed sections that are coated with dust, sand, or other objectionable material shall be painted with a thin coat of bituminous material to act as an anti-stripping agent, conforming to Section 02744, titled "BITUMINOUS TACK COAT", just before placing fresh mixture. Application rate shall be as specified.

3.4.1 Transverse: Roller shall pass over unprotected end of freshly laid mixture only when laying of course is to be discontinued. Except when an approved bulkhead is used, cut back the edge of previously laid course to expose an even, vertical surface for the full thickness of the course. Paint with a thin coat of bituminous material to act as an anti-stripping agent, conforming to Section 32 12 10, titled "BITUMINOUS TACK AND PRIME COATS", just before placing fresh mixture.. Application rate shall be as specified. Rake fresh mixture against joints, thoroughly tamp with hot tampers, smooth with hot smoothers, and roll. Transverse joints in adjacent lanes shall be offset a minimum of 60 cm (2 feet).

3.4.2 Longitudinal Joints: Space 15 cm (6 in) apart. Do not allow joints to coincide with joints of existing pavement or previously placed courses. Spreader screed shall overlap previously placed lanes 5 to 7.5 cm (2 to 3 in) and be of such height to permit compaction to produce a smooth dense joint. With a lute, push back mixture placed on the surface of previous lanes to the joint edge. Do not scatter mix. Remove and waste excess material. When edges of longitudinal joints are irregular, honeycombed, or poorly compacted, cut back unsatisfactory sections of joint and expose an even vertical surface for the full thickness of the course. When required, rake fresh mixture against joint, thoroughly tamp with hot tampers, smooth with hot smoothers, and roll while hot.

3.5 FIELD QUALITY CONTROL The Contractor shall normally conduct all sampling and testing at his expense, as stated in the Quality Control section. There may be certain special occasions where the Government will conduct sampling and testing.

3.5.1 Sampling:

3.5.1.1 Aggregates At Source: Prior to production and delivery of aggregates, take at least one initial sample in accordance with NLT-148 from each stockpile. Collect each sample by taking three incremental samples at random from the source material to make a composite sample of not less than 23 Kg (50 pounds). Repeat the sampling when the material source changes or when testing reveals unacceptable deficiencies or variations from the specified grading of materials.

3.5.1.2 Cold Feed Aggregate Sampling: Take two samples daily from the belt conveying materials from the cold feed. Collect materials in three increments at random to make a representative composite sample of not less than 23 Kg (50 pounds). Take samples in accordance with NLT-148.

3.5.1.3 Coarse and Fine Aggregates Take a 23 Kg (50-pound) sample from the cold feed at least once daily for sieve analyses and specific gravity tests. Additional samples may be required to perform more frequent tests when analyses show deficiencies, or unacceptable variances or deviations. The method of sampling is as specified herein for aggregates.

3.5.1.4 Mineral Filler: NLT-151. Take samples large enough to provide ample material for testing.

3.5.1.5 Pavement and Mixture: Take plant samples for the determination of mix properties and field samples for thickness and density of the completed pavements. Furnish tools, labor and material for samples, and satisfactory replacement of pavement. Take samples and tests at not less than frequency specified hereinafter and at the beginning of plant operations; for each day's work as a minimum; each change in the mix or equipment; and as often as directed. Accomplish sampling in accordance with NLT-121.

3.5.2 Testing:

3.5.2.1 Aggregates:

a. Gradation: NLT-150
b. Mineral Filler Content: NLT-151
c. Abrasion: NLT-149 for wear (Los Angeles test). Perform one test initially prior to incorporation into the work and each time the source is changed.

3.5.2.2 Bituminous Mix: Test one sample for each 100 tons, or fraction thereof, of the uncompacted mix for extraction in accordance with NLT-150 and NLT-152. Test one sample for each 100 tons or fraction thereof for stability and flow in accordance with NLT-158. Test one sample for each material blend for index of retained strength in accordance with NLT-162

3.5.2.3 Pavement Courses: Perform the following tests:

a. Density: For each 100 tons of bituminous mixture placed, determine the representative laboratory density by averaging the density of four laboratory specimens prepared in accordance with NLT-168. Samples for laboratory specimens shall be taken from trucks delivering mixture to the site; record in a manner approved by the Contracting Officer the project areas represented by the laboratory densities. From each representative area recorded, determine field density of pavement by averaging densities of 10 cm (4 in) diameter cores obtained from leveling, binder, and wearing courses; take one core for each 1000 square meters or fraction thereof of course placed. Determine density of laboratory prepared specimens and cored samples in accordance with NLT-311, as applicable. Separate pavement layers by sawing or other approved means. Maximum allowable deficiency at any point, excluding joints, shall not be more than 2 percent less than the specified density for any course. The average density of each course, excluding joints, shall be not less than the specified density. Joint densities shall not be more than 2 percent less than specified course densities and are not included when calculating average course densities. When the deficiency exceeds the specified tolerances, correct each such representative area or areas by removing the deficient pavement and replacing with new pavement.

b. Thickness: Determine thickness of binder and wearing courses from samples taken for the field density test. The maximum allowable deficiency at any point shall not be more than 6 mm (1/4 in) less than the thickness for the indicated course. Average thickness of course or of combined courses shall be not less than the indicated thickness. Where a deficiency exceeds the specified tolerances, correct each such representative area or areas by removing the deficient pavement and replacing with new pavement.

c. Smoothness: Straightedge test the compacted surface courses as work progresses. Apply straightedge parallel with and at right angles to the centerline after final rolling. Unevenness of the course shall not vary more than 6 mm (1/4 in) in 3 meters (10 feet); Correct each portion of the pavement showing irregularities greater than that specified.

d. Finished Grades: Finish grades of each course placed shall not vary from the finish elevations, profiles, and cross sections indicated by more than 12.5 mm (1/2 in). Finished surface of the course will be tested by the Contracting Officer by running lines of levels at intervals of 7.5 meters (25 feet) longitudinally and transversely to determine elevations of completed pavement. Within 45 days after completion of final placement, perform a level survey at the specified grid spacing and plot the results on a plan drawn to the same scale as the drawings. Elevations not in conformance with the specified tolerance shall be noted on the plan in an approved manner. The survey shall be performed by a registered land surveyor. The Contracting Officer will inform the Contractor in writing of paved areas that fail to meet the final grades indicated within the specified tolerances. Correct deficient paved areas by removing existing work and replacing with new materials that meet the specifications. Skin patching for correcting low areas is prohibited.

e.Finish Surface Texture of Wearing Course: Visually check final surface texture for uniformity and reasonable compactness and tightness. Final wearing course with a surface texture having undesirable irregularities such as segregation, cavities, pulls or tears, checking, excessive exposure of coarse aggregates, sand streaks, indentations, ripples, or lack of uniformity shall be removed and replaced with new materials.

3.6 PROTECTION: Do not permit traffic, including heavy equipment, on pavement until surface temperature has cooled to at least 48° C. Measure surface temperature by approved surface thermometers or other satisfactory methods.

***** END OF SECTION *****

SECTION 32 17 23.00 20

PAVEMENT MARKINGS

PART I - GENERAL

1.1 REFERENCES: The publications listed below form a part of this specification to the extent referenced. The publications are referred to in the text by the basic designation only. The latest edition of the referenced publications shall govern.

1.1.1 CENTRO DE PUBLICACIONES DEL MINISTERIO DE OBRAS PUBLICAS Y URBANISMO (MOPU):

PG-3, Art. 700	Pliego de Prescripciones Tecnicas Generales para Obras de Carreteras y Puentes. Marcas Viales

1.1.2 UNA NORMA ESPAÑOLA (UNE):

UNE-EN 1424	Road Marking Materials. Premix Glass Beads

1.2 SUBMITTALS: Submit the following in accordance with Section, titled 01 33 00, "Submittal Procedures."

1.2.1 Manufacturer's Catalog Data: Provide manufacturer's descriptive catalog data for the following:

a. Reflective media for roads and streets.
b. Paints for roads and streets.

1.2.2 Instructions: Provide manufacturer's installation instructions for the following:

a. Reflective media for roads and streets.
b. Paints for roads and streets.

1.2.3 Statements:

a. Construction equipment list.

1.2.4 Factory Test Reports: Provide report from sampling and testing made in accordance with paragraph entitled "Sampling and Testing" for the following:

a. Reflective media for roads and streets.
b. Paints for roads and streets.

1.2.5 Certificates: Provide manufacturer's certification of conformance with the referenced publications and standards for the following:

a. Reflective media for roads and streets.
b. Paints for roads and streets.

1.3 DELIVERY AND STORAGE: Deliver paints, paint materials and thermoplastic compound materials in original sealed containers that plainly show the designated name, specification number, batch number, color, date of manufacture, manufacturer's directions, and name of manufacturer. Provide storage facilities at the job site for maintaining materials at temperatures recommended by the manufacturer. Make available paint stored at the project site or segregated at the source

for sampling not less than 30 days prior to date of required approval for use to allow sufficient time for testing. Notify the Contracting Officer when paint is available for sampling.

1.4 WEATHER LIMITATIONS: Apply paint to clean, dry surfaces, and unless otherwise approved, only when air and pavement temperatures are above 4.4 degrees C (40 degrees F) for oil-based materials, 10 degrees C (50 degrees F) for water-based materials, and less than 35 degrees C (95 degrees F). Maintain paint temperature within these same limits.

PART II - PRODUCTS

2.1 MATERIALS: Provide materials conforming to the requirements specified herein.

2.1.1 Paints for Roads and Streets: MF PG-3, Art. 700 Traffic grade, color as selected.

2.1.2 Reflective Media for Roads and Streets: MF PG-3, Art. 700.

2.2 EQUIPMENT: Machines, tools, and equipment used in the performance of the work shall be approved by the Contracting Officer and maintained in satisfactory operating condition.

2.2.1 Paint Obliteration Equipment: Paint obliteration equipment shall be of a standard product used to completely remove existing road markings from bituminous asphalt cement pavement, while affecting minimal damage to the pavement.

2.2.2 Paint Applicator:

2.2.2.1 Hand Operated Equipment: Provide hand-operated push-type applicator machine of a type commonly used for application of paint to pavement surfaces. Paint applicator machine shall be acceptable for marking small street and parking areas. Applicator machine shall be equipped with the necessary paint tanks and spraying nozzles, and shall be capable of applying paint uniformly at coverage specified.

2.2.2.2 Self-propelled or Mobile-Drawn Equipment: Provide self-propelled or mobile-drawn pneumatic spraying machine with suitable arrangements of atomizing nozzles and controls to obtain the specified results. Provide machine having a speed during application capable of applying the stripe widths indicated at the paint coverage rate specified herein and of even uniform thickness with clear-cut edges. Provide equipment used for marking streets and highways capable of placing the prescribed number of lines at a single pass as solid lines, intermittent lines, or a combination of solid and intermittent lines using a maximum of three different colors of paint as specified. Provide paint applicator with paint reservoirs or tanks of sufficient capacity and suitable gages to apply paint in accordance with requirements specified. Equip tanks with suitable air-driven mechanical agitators. Equip spray mechanism with quick-action valves conveniently located, and include necessary pressure regulators and gages in full view and reach of the operator. Install paint strainers in paint supply lines to ensure freedom from residue and foreign matter that may cause malfunction of the spray guns. The paint applicator shall be readily adaptable for attachment of an air-actuated dispenser for the reflective media approved for use. Provide pneumatic spray guns for hand application of paint in areas where the mobile paint applicator cannot be used.

2.2.2.3 Portable Application Equipment: The portable applicator shall be defined as hand-operated equipment, specifically designed for placing special markings such as crosswalks, stopbars, legends, arrows, and short lengths of lane, edge and centerlines.

2.2.3 Reflective Media Dispenser: Attach dispenser for applying the reflective media to the paint dispenser and operate automatically and simultaneously with the paint applicator through the same control mechanism. Use dispenser capable of adjustment and designed to provide uniform flow of reflective media over the full width of the stripe at the rate of coverage specified herein at all operating speeds of the paint applicator to which it is attached.

PART III - EXECUTION

3.1 SURFACE PREPARATION:

3.1.1 Pavement Surface: Where applicable, allow new pavement surfaces to cure for a period of not less than 30 days before application of marking materials. Thoroughly clean surfaces to be marked before application of the paint. Remove dust, dirt, and other granular surface deposits by sweeping, blowing with compressed air, rinsing with water, or a combination of these methods as required. Remove rubber deposits, existing paint markings, residual curing compounds, and other coatings adhering to the pavement by water blasting. Scrub affected areas, where oil or grease is present on old pavements to be marked, with several applications of trisodium phosphate solution or other approved detergent or degreaser and rinse thoroughly after each application. After cleaning oil-soaked areas, seal with shellac or primer recommended by the manufacturer to prevent bleeding through the new paint. Do not commence paint application or roadway reflector installation work in any area until pavement surfaces are dry and clean and have been inspected and approved by the Contract Performance Assessment Representative (PAR).

3.1.1.1 Where ordered, existing painted road markings shall be completely obliterated and removed, resulting in a clean and clear surface to receive
new markings.

3.1.2 Concrete and Cementitious Surface: Remove dirt, grease, and oil. Wash new and existing uncoated surfaces with a solution composed of 0.2 liter trisodium phosphate, 0.1 liter household detergent, and 6.4 liters of warm water. Then rinse thoroughly with fresh water. Wash existing coated surfaces with a suitable detergent and rinse thoroughly. For large areas, water blasting may be used. Paint and loose particles shall be removed by wire brushing. Efflorescence shall be removed by scraping or wire brushing followed by washing with a 5 to 10 percent by weight aqueous solution of hydrochloric (muriatic) acid. Do not allow acid to remain on the surface for more than five minutes before rinsing with fresh water. Do not acid clean more than 0.4 square meter of surface, per workman, at one time. For surfaces to receive textured coating, remove existing coatings including soundly adhered coatings if recommended by textured coating manufacturer. Repair or fill mortar joints and minor defects, including but not limited to spalls, in accordance with manufacturer's recommendations and prior to coating application. Latex coatings may be applied to damp surfaces, but not to surfaces with droplets of water. Do not apply epoxies to damp surfaces. Allow surfaces to cure a minimum of 30 days before painting.

3.1.3 Early Painting of Asphalt Pavements: For asphalt pavement systems requiring painting application at less than 30 days, apply the paint and beads at half the normal application rate, followed by a second application at the normal rate after 30 days.

3.2 APPLICATION:

3.2.1 Rate of Application - Paint:

3.2.1.1 Non-Reflective Markings: Apply paint evenly to the pavement area to be coated at a rate of 2.5 (+/- 5) square meters per liter (105 (+/- 5) square feet per gallon).

3.2.1.2 Reflective Markings: Apply paint evenly to the pavement area to be coated at a rate of 2.5 (+/- 5) square meters per liter (105 (+/- 5) square feet per gallon). Apply glass spheres uniformly to the wet paint on road and street pavement at a rate of 0.71 Kg. of glass spheres per liter (+/- 5) (6 (+/- 5) pounds of glass spheres per gallon).

3.2.1.3 Painting: Apply paint pneumatically with approved equipment at rate of coverage specified herein. Provide guidelines and templates as necessary to control paint application. Take special precautions in marking numbers, letters, and symbols. Manually paint numbers, letters, and symbols. Sharply outline all edges of markings. The maximum drying time requirements of the paint specifications will be strictly enforced, to prevent undue softening of bitumen, and pickup, displacement, or discoloration by tires of traffic. Discontinue painting operations if there is a deficiency in drying of the markings until cause of the slow drying is determined and corrected.

3.2.2 Roadway Reflectors: Install roadway reflectors in accordance with manufacturers written instructions.

3.3 FIELD TESTING AND INSPECTION:

3.3.1 Sampling and Testing: As soon as the materials are available for sampling, obtain by random selection from the sealed containers, two quart samples of each batch in the presence of the Contracting Officer. Accomplish adequate mixing prior to sampling to ensure a uniform, representative sample. A batch is defined as that quantity of material processed by the manufacturer at one time and identified by number on the label. Clearly identify samples by designated name, specification number, batch number, project contract number, intended use, and quantity involved. Test samples by an approved laboratory. If a sample fails to meet specification, replace the material in the area represented by the samples and retest the replacement material as specified above. Submit copy of the test results to the Contracting Officer. Include in the report of test results a listing of any specification requirements not verified by the test laboratory. At the discretion of the Contracting Officer, additional samples provided may be tested by the Government for verification.

3.3.2 Inspection: Examine material at the job site to determine that it is the material referenced in the report of test results or certificate of compliance. A certificate of compliance shall be accompanied by test results substantiating conformance to the specified requirements.

3.3.2.1 Surface Preparations and Application Procedures: Surface preparations and application procedures will be examined by the Contract Performance Assessment Representative (PAR) to determine conformance with the requirements specified. Approve each separate operation prior to initiation of subsequent operations.

3.4 TRAFFIC CONTROL AND PROTECTION: Place warning signs near the beginning of the work site and well ahead of the work site for alerting approaching traffic from both directions. Place small markers along newly painted lines to control traffic and prevent damage to newly painted surfaces. Mark painting equipment with large warning signs indicating slow-moving painting equipment in operation.

***** END OF SECTION *****

SECTION 33 40 01

STORM DRAINAGE

PART I - GENERAL

1.1 REFERENCES: The publications listed below form a part of this specification to the extent referenced. The publications are referred to in the text by the basic designation only.

1.1.1 AMERICAN NATIONAL STANDARDS INSTITUTE (ANSI):

ANSI A14.3	Ladders - Fixed; Safety Requirements

1.1.2 UNA NORMA ESPAÑOLA (UNE):

UNE-EN 1452-3:	Plastics piping systems for water supply and for buried and above-ground drainage and sewerage under pressure - Unplasticized poly(vinyl chloride) (PVC-U) - Part 3: Fittings (ISO 1452-3:2009, corrected version 2010-03-01).
UNE-EN 13476-3	Plastics Piping Systems For Non-Pressure Underground Drainage And Sewerage - Structured-Wall Piping Systems Of Unplasticized Poly(Vinyl Chloride) (PVC-U), Polypropylene (PP) And Polyethylene (PE) - Part 3: Specifications For Pipes And Fittings With Smooth Internal And Profiled External Surface And The System, Type B**.**
UNE-EN 13598-1	Plastics Piping Systems For Non-Pressure Underground Drainage And Sewerage - Unplasticized Poly(Vinyl Chloride) (PVC-U), Polypropylene (PP) And Polyethylene (PE) - Part 1: Specifications For Ancillary Fittings Including Shallow Inspection Chambers.
UNE-EN 13598-2	Plastics Piping Systems For Non-Pressure Underground Drainage And Sewerage - Unplasticized Poly(Vinyl Chloride) (PVC-U), Polypropylene (PP) And Polyethylene (PE) - Part 2: Specifications For Manholes And Inspection Chambers In Traffic Areas And Deep Underground Installations.
UNE 53174	Plastics. Specifications For Adhesives For Cemented Jointing Of Unplasticized Polyvinyl Chloride Pipes And Fittings Used For Pressure And Non-Pressure Fluids Pipelines.
UNE 53114	Materiales Plasticos. Accesorios Inyectados De Poli (Cloruro De Vinilo) No Plastificado Para Evaluacion De Aguas Pluviales Y Residuales. Para Union Con Adhesivo Y Junta Elastica, Caracteristicas Y Metodos De Ensayo
UNE-ENV 1452-6	Plastics Piping Systems For Water Supply - Unplasticized Poly (Vinyl Chloride) (Pvc-U) - Part 6: Guidance For Installation.
UNE-EN 1916	Concrete Pipes And Fittings, Unreinforced, Steel Fibre And Reinforced.
UNE-EN 1917	Concrete Manholes And Inspection Chambers, Unreinforced, Steel Fibre And Reinforced.
UNE-EN 1561	Founding. Grey Cast Irons.
UNE-EN 1563	Founding - Spheroidal Graphite Cast Irons.

UNE-EN 1401-1	Plastics Piping Systems For Non-Pressure Underground Drainage And Sewerage - Unplasticized Poly(Vinyl Chloride) (PVC-U) - Part 1: Specifications For Pipes, Fittings And The System.
UNE-EN 639	Common Requirements For Concrete Pressure Pipes Including Joints And Fittings.
UNE-EN 642	Prestressed Concrete Pressure Pipes, Cylinder And Non-Cylinder, Including Joints, Fittings And Specific Requirement For Prestressing Steel For Pipes.
UNE-EN 681-1	Elastomeric Seals - Material Requirements For Pipe Joint Seals Used In Water And Drainage Applications - Part 1: Vulcanized Rubber.
UNE-EN 10025-2	Hot Rolled Products Of Structural Steels - Part 2: Technical Delivery Conditions For Non-Alloy Structural Steels.
UNE-EN 287-1	Qualification test of welders - Fusion welding - Part 1: Steels.
UNE-EN 10111	Continuously Hot Rolled Low Carbon Steel Sheet And Strip For Cold Forming - Technical Delivery Conditions.
UNE-EN 10130	Cold Rolled Low Carbon Steel Flat Products For Cold Forming - Technical Delivery Conditions.
UNE 36092	Steel Welded Fabric For Concrete Reinforcing.
UNE 36094	Steel Wire And Strand For Prestessed Concrete.
UNE-EN 124	Gully Tops And Manhole Tops For Vehicular And Pedestrian Areas. Design Requirements, Type Testing, Marking, Quality Control.

1.1.3 FEDERAL SPECIFICATIONS (FS):

A-A-203	Paper, Kraft, Untreated for Type I

1.1.4 CENTRO DE PUBLICACIONES DEL MINISTERIO DE FOMENTO(MF):

PG-3, Arts. 400-421	Pliego de Prescripciones Tecnicas Generales para Obras de Carreteras y Puentes. Drenaje
MF PPTGTSP	Pliego de Prescripciones Técnicas Generales para Tuberías de Saneamiento de Poblaciones.
NTE-ISA	Instalaciones de Salubridad y Alcantarillado.
NTE-EFL	“Estructuras de Fabrica de Ladrillo".
NTE-RPE	"Revestimiento de Paramentos Enfoscados".

1.1.5 ASOCIACIÓN NACIONAL DE FABRICANTES DE CEMENTO ESPAÑOLES (ANDECE)**:**

Manual Para la Instalación de Tubos de Hormigón y Prevención de Riesgos Laborales.

1.1.6 JEFATURA DEL ESTADO (MADRID, SPAIN)

Ley 31/1995	Ley de Prevención de Riesgos Laborales
R. D. 604	Disposiciones Minimas de Seguridad y Salud en las Obras de Construccion

1.1.7 MINISTERIO DE TRABAJO Y ASUNTOS SOCIALES (MTAS)

MTAS 1	Ordenanza de Seguridad e Higiene en el Trabajo
MTAS-ORD	Reglamento de Seguridad e Higiene en el Trabajo en la Industria de la Construcción

1.1.8 U.S. ARMY CORPS OF ENGINEERS (USACE):

EM 385-1-1	Safety - Safety and Health Requirements Manual

1.2 DEFINITIONS

1.2.1 Granular Pipe Bedding: A dense, well-graded aggregate mixture of sand, gravel, or crushed stone (mixed individually, in combination with each other, or with suitable binder soil) placed on a subgrade to provide a suitable foundation for pipe. Granular bedding material may also consist of poorly graded sands or gravels where fast draining soil characteristics are desired.

1.2.2 Hard Material: Weathered rock, dense consolidated deposits, or conglomerate materials (excluding man made materials such as concrete) which are not included in the definition of "rock" but which usually require the use of heavy excavation equipment, ripper teeth, or jack hammers for removal.

1.2.3 In-Situ Soil: Existing in place soil.

1.2.4 Lift: A layer (or course) of soil placed on top of subgrade or a previously prepared or placed soil in a fill or backfill.

1.2.5 Porous Fill: A granular soil material having a large void ratio when placed and compacted, allowing a free flow of fluid to or from the surrounding soil, with no more than 10% of the material passing the 1.27 cm. (1/2-inch) Sieve.

1.2.6 Refill: Material placed in excavation to correct overcut in depth.

1.2.7 Rock: Solid homogeneous interlocking crystalline material with firmly cemented, laminated, or foliated masses or conglomerate deposits, neither of which can be removed without systematic drilling and blasting, drilling and the use of expansion jacks or feather wedges, or the use of backhoe-mounted pneumatic hole punchers or rock breakers; also large boulders, buried masonry, or concrete other than pavement exceeding 1 cubic yard in volume. Removal of "hard material" will not be considered rock excavation because of intermittent drilling and blasting that is performed merely to increase production.

1.2.8 Topsoil: In natural or undisturbed soil formations, the fine-grained, weathered material on the surface or directly below any loose or partially decomposed organic matter. Topsoil may be a dark-colored, fine, silty, or sandy material with a high content of well decomposed organic matter, often containing traces of the parent rock material. Gradation and material requirements specified herein apply to all topsoil references in this contract. The material shall be representative of productive soils in the vicinity.

1.2.9 Unyielding Material: Rock rib, ridge, rock protrusion, or soil with cobbles in the trench bottom requiring a covering of finer grain material or special bedding to avoid bridging in the pipe or conduit.

1.2.10 Unsatisfactory Material: In-Situ soil or other material which can be identified as having insufficient strength characteristics or stability to carry intended loads in the trench without excessive consolidation or loss of stability. Also backfill material which contains refuse, frozen material, large rocks, debris, soluble particles, and other material which could damage the pipe or cause the backfill not to compact. Materials classified as PT, OH, or OL by ASTM D 2487 are unsatisfactory.

1.2.11 Unstable Material: Material in the trench bottom which lacks firmness to maintain alignment and prevent joints from separating in the pipe, conduit, or appurtenance structure during backfilling. This may be material otherwise identified as satisfactory which has been disturbed or saturated.

1.3 SUBMITTALS: Submit the following in accordance with Section 01 33 00, titled "SUBMITTAL PROCEDURES."

1.3.1 Manufacturer's Catalog Data: Provide manufacturer's descriptive catalog data for the following:

a. Concrete piping including fittings and jointing materials.

b. Subsurface drainage piping including fittings and jointing materials.

1.3.2 Drawings:

a. Pre-cast concrete manhole.
b. Pre-cast/brick catch basin.
c. Metal items (Manhole/catch basin frames & lid/grating).

1.3.3 Certificates:

a. Pipeline and fittings, including factory-applied linings and joint materials.
b. Cast-iron frames, covers, and gratings.
c. Precast concrete manhole/catch basin sections.

1.3.3.1 Submit certificates attesting that tests set forth in each applicable referenced publication have been performed, whether specified in that publication to be mandatory or otherwise and that production control tests have been performed at the frequency or intervals specified in the publication. Other tests shall have been performed within 3 years of the date of submittal of certificates on the same type, class, grade, and size of material as is being provided for the project.

1.4 DELIVERY, STORAGE, AND HANDLING:

1.4.1 Delivery and Storage:

1.4.1.1 Piping: Inspect materials delivered to site for damage; store with minimum of handling. Store materials on site in enclosures or under protective coverings. Store rubber gaskets and PVC pipes under cover out of direct sunlight. Do not store materials directly on the ground. Keep inside of pipes and fittings free of dirt and debris. Store PVC pipe in such a manner as to prevent sagging or bending. Keep solvent cement away from heat, spark, and open flame.

1.4.1.2 Metal Items: Check upon arrival; identify and segregate as to types, functions, and sizes. Store off the ground in a manner affording easy accessibility and not causing excessive rusting or coating with grease or other objectionable materials.

1.4.1.3 Cement, Aggregates, and Reinforcement: Store as specified in Sections 03 33 00 “Cast-in-Place Architectural Concrete”, and 32 11 24 “Graded Crushed Aggregate Base Course for Flexible Pavement”.

1.4.2 Handling: Handle pipe, fittings, and other accessories in a manner to ensure delivery to the trench in sound undamaged condition. Carry, do not drag pipe to trench. Always position PVC pipe and fittings so that identifying markings are readily visible to inspection when installed.

PART II - PRODUCTS

2.1 PIPELINE AND CULVERT MATERIALS:

2.1.1 Concrete Piping:

2.1.1.1 Concrete Pipe and Fittings: Concrete storm drainage and culvert pipe shall be nonreinforced concrete pipe conforming to UNE. Fittings and specials shall conform to the applicable requirements specified for the pipe and shall be of the same strength as the pipe. Cement used in manufacturing pipe and fittings shall be conforming to applicable UNE.

2.1.1.2 Jointing Materials for Concrete Piping: Rubber gasket joints shall conform to applicable UNE. In lieu of rubber gasket joints, make joints in concrete pipe with fiber gaskets and 1-to-2 portland cement mortar.

2.1.2 Polyvinyl Chloride PVC Plastic Piping:

2.1.2.1 Polyvinyl Chloride PVC Plastic Pipe and Fittings: Plastic storm drainage and culvert pipe shall be Polyvinyl Chloride PVC Plastic Pipe, Schedule 80 conforming to applicable UNE.

2.1.2.2 Jointing Materials for Polyvinyl Chloride PVC Plastic Piping:

a. Flexible Elastomeric Seal, UNE 53114.
b. Solvent Cement, UNE 53174.

2.1.3 Subsurface Drainage Piping and Materials:

2.1.3.1 Concrete Drain Tile: Conforomming to applicable UNE, standard-quality.

2.1.3.1.1 Requirements Governing Piping: Cement for concrete pipe shall be Type II conforming to applicable UNE. Use non-perforated fittings of the same material and strength, where necessary, that conform to the applicable specifications specified for fittings.

2.2 RIP-RAP CHANNEL LINER:

2.2.1 Bedding Material: Consisting of sand, gravel, or crushed rock, well graded, with a maximum particle size of 5 cm.(2 inches). Material shall be composed of tough, durable particles. Fines passing the No. 200 standard sieve shall have a plasticity index less than six.

2.2.2 Grout: Composed of cement, water and sand mixed in proportions of one part portland cement to two parts of sand, sufficient water to produce a workable mixture. Mix Grout in a concrete mixer. Mixing time shall be sufficient to produce a mixture having a consistency permitting gravity flow into the interstices of the rip-rap with limited spading and brooming.

2.2.3 Rock: Rock fragments sufficiently durable to ensure permanence in the structure and the environment in which it is to be used. Rock fragments shall be free from cracks, seams, and other defects that would increase the risk of deterioration from natural causes. The size of the fragments shall be such that no individual fragment exceeds an average diameter of 20.0 cm (8 in), and no less than 10 cm (4 in). No more than 10 percent of the mixture, by weight, shall consist of fragments having an average diameter of less than 10 cm (4 in). Specific gravity of the rock shall be a minimum of 1.12 Kg. (2.50 pounds). The inclusion of more than trace quantities of dirt, sand, clay, and rock fines will not be permitted.

2.3 CONCRETE MATERIALS: Provide as specified in Section 03 33 00.

2.4 MISCELLANEOUS MATERIALS:

2.4.1 Pre-cast Concrete and Associated Materials:

2.4.1.1 Pre-cast Concrete Manhole/Catch Basin Sections: Precast concrete manhole/catch basin risers, base sections, and tops shall conform to NTE ISA. Base and first riser shall be monolithic. Top section shall be conical.

2.4.1.2 Gaskets and Connectors: Gaskets for joints between manhole/catch basin sections shall conform to applicable UNE. Resilient connectors for making joints between manhole/catch basin and pipes entering and or exiting shall conform to applicable UNE as specified in PG-3.

2.4.2 Mortar: Mortar for pipe joints, connections to other drainage structures, brick or block construction shall conform to applicable UNE as specified in PG-3, except the maximum placement time shall be 1 hour. The quantity of water in the mixture shall be sufficient to produce a stiff workable mortar. Water shall be clean and free of harmful acids, alkalies, and organic impurities. The mortar shall be used within 30 minutes after the ingredients are mixed with water. The inside of the joint shall be wiped clean and finished smooth. The mortar head on the outside shall be protected from air and sun with a proper covering until satisfactorily cured.

2.4.3 Brick: Brick shall conform to applicable UNE as specified in PG-3. Mortar for jointing and plastering shall consist of one part Portland cement and two parts fine sand. Lime may be added to the mortar in a quantity not more than 25 percent of the volume of cement. The joints shall be filled completely and shall be smooth and free from surplus mortar on the inside of the structure. Brick structures shall be plastered with 10 mm (1/2 inch) of mortar over the entire outside surface of the walls. For square or rectangular structures, brick shall be laid in stretcher courses with a header course every sixth course.

2.4.4 Metal Items:

2.4.4.1 Frames, Covers for Manholes: NTE ISA and EN 124. Cast iron with the word "STORM" in high relief on the cover and provided
with holes for lifting. Provide ductile cast iron covers class 400 (acceptable load > 400 kN) for areas subject to traffic; provide class 125 (acceptable load > 125 kN) type for covers installed in seeded areas. Provide class 125 type for covers installed in walkways.

2.4.4.2 Frames and Gratings for Catch Basins: Grating shall be ductile cast iron and secured to the frame with removable clips conforming to applicable UNE in PG-3. Frames and gratings shall be capable of supporting 400 Kg/m2 distributed load and a 1500 kg concentrated load. Weight, shape, size, and waterway opening for grates and curb inlets shall be as indicated.

2.4.4.3 Drainage Structure Steps: Zinc-coated steel, conforming to ANSI A14.3. As an option, plastic or rubber coating pressure-molded to the steel may be used. Plastic coating shall conform to applicable UNE, copolymer polypropylene. Rubber shall conform to applicable UNE, except shore A durometer hardness shall be 70 plus or minus 5. For catch basins, steel sump ladder rungs as indicated may be used in lieu of cast-iron steps; rungs shall be zinc-coated after fabrication. Aluminum steps or rungs will not be permitted. Steps are not required in manholes or catch basins less than 4 feet deep.

PART III - EXECUTION

3.1 INSTALLATION OF PIPELINES AND APPURTENANT CONSTRUCTION:

3.1.1 General Requirements for Installation of Pipelines: These requirements shall apply to pipeline installation except where specific exception is made under paragraph entitled "Special Requirements."

3.1.1.1 Location: The work required under this section shall be located as indicated on the contract delivery order and/or drawings.

3.1.1.2 Earthwork: Perform earthwork operations in accordance with Section 31 23 00.00 20 “Excation and Fill”.

3.1.1.3 Pipe Laying and Jointing: Inspect each pipe and fitting before and after installation; remove those found defective from site and replace with new. Provide proper facilities for lowering sections of pipe into trenches. Lay pipe with the bell ends in the upgrade direction. Adjust spigots in bells to produce a uniform space. Blocking or wedging between bells and spigots will not be permitted. Replace by one of the proper dimensions any pipe or fitting that does not allow sufficient space for proper caulking or installation of joint material. At the end of each workday, close open ends of pipe temporarily with wood blocks or bulkheads. Provide batterboards not more than 7.5 m. (25 feet) apart in trenches for checking and ensuring that pipe invert elevations are as indicated. Laser beam method may be used in lieu of batterboards for the same purpose.

3.1.1.4 Connections to Existing Lines: Notify the contract Performance Assesment Representative (PAR) in writing at least 10 days prior to date that connections are to be made. Obtain approval of the PAR before interrupting service. Conduct work so that there is minimum interruption of service on existing line.

3.1.2 Special Requirements:

3.1.2.1 Installation of Concrete Piping: Install pipe and fittings in accordance with paragraph entitled "General Requirements for Installation of Pipelines" of this section. and with the provisions for rubber gasket jointing and jointing procedures in Manual Para la Instalación de Tubos de Hormigón y Prevención de Riesgos Laborales. Make joints with the gaskets previously specified for joints with this piping. Clean and dry surfaces receiving lubricants, cements, or adhesives. Affix gaskets to pipe not more than 24 hours prior to the installation of the pipe. Protect gaskets from sun, blowing dust, and other deleterious agents at all times. Before installation of the pipe, inspect gaskets and remove and replace loose or improperly affixed gaskets. Align each pipe section with the previously installed pipe section, and pull the joint together. If, while pulling the joint, the gasket becomes loose and can be seen through the exterior joint recess when the pipe is pulled up to within one inch of closure, remove the pipe and remake the joint.

3.1.2.2 Installation of PVC Plastic Piping: Install pipe and fittings in accordance with the " Manual Para la Instalación de Tubos de Hormigón y Prevención de Riesgos Laborales" (Handbook for the Installation of Concrete Pipes and Safety Risks Prevention) from ANDECE and with the requirements of applicable UNE as specified in PG-3 for laying and joining pipe and fittings. Make joints with the gaskets specified for joints with this piping; assemble in accordance with the requirements of applicable UNE as specified in PG-3 for assembly of joints. Make joints to other pipe materials in accordance with the recommendations of the plastic pipe manufacturer.

a. Jointing: Cut the pipe square with saws or pipe cutters designed specifically for this material; protect pipe and fittings from serrated holding devices and abrasion. Remove burrs from inside and outside pipe edges. Wipe off all dust, dirt, and moisture from surfaces to be cemented with a clean, dry rag or paper towel. Remove gloss and oily film from the pipe and matting socket with clean steel wool, fine abrasive paper, chemical cleaner, or primer. In case of conflicting solvent cement instructions, instructions of the cement manufacturer should be followed. Use a natural bristle of nylon brush of adequate size (usually at least 1/2 the pipe diameter) or an applicator supplied with the can of cement in the fitting socket completely covering the pipe joining surfaces only. Heavy or excessive applications of cement may become an obstruction inside the piping. Quickly apply a heavy even coat of cement to the outside of the pipe. Make sure that the coated distance on the pipe is equal to the depth of the fitting socket. Make the joint as quickly as possible after application of the cement and before the cement dries. Insert the pipe into the fitting socket turning the pipe slightly to ensure even distribution of cement. Make sure that the pipe is inserted to the full depth of the socket. Remove excess solvent cement from the exterior of the joint with a clean, dry cloth. Reasonable handling of the assembly is permissible after 2 month. Do not attempt to disturb the pipefitting joint until after the cement has set; damage to the joint and loss of fit may result. Should the cement dry partially before joint is made up, reapply cement before assembling. Allow 15 min for join to develop good handling strength.

3.1.2.3 Installation of Subsurface Drainage Piping: Laying and jointing shall be in accordance with paragraph entitled "General Requirements for Installation of Piping" of this section, except as specified hereinafter, and with the additional requirements specified hereinafter.

a. Laying and Jointing: The laying of pipe and tile shall proceed upgrade from the lower end of the line, and shall have a uniform pitch to the outlets. Lay drain tile with 0.31 to 0.6 cm (1/8 to 1/4 in) open joints. Joints between the tiles shall be covered with one thickness of the jointing material specified; material shall overlap the joint not less than 10 cm (4 in) on each side and shall cover the tile for not less than the upper half or more than the upper two-thirds of the circumference of the tile. Lay perforated concrete pipe without filling the pipe joints, but with positive provision for centering each section of pipe in the bell of the placed section.

3.1.3 Manhole and Catch Basin Construction: Construction shall be of brick or pre-cast concrete segmental blocks, complete with frames and covers or gratings and with fixed galvanized steel ladders where indicated. Construct base slab of cast-in-place concrete or use pre-cast concrete base sections. Make inverts in cast-in-place concrete and pre-cast concrete bases with a smooth-surfaced semi-circular bottom conforming to the inside contour of the adjacent drainage sections. For changes in direction of drains and entering branches into the manhole, make a circular curve in the manhole invert of as large a radius as manhole size will permit. For cast-in-place concrete construction, either pour bottom slabs and walls integrally or key and bond walls to bottom slab. For pre-cast concrete construction, make joints between sections with the gaskets specified for this purpose; install in the manner specified for installing joints in concrete piping. Give a smooth finish to inside joints of pre-cast concrete manholes and catch basins. Parging will not be required for pre-cast concrete manholes. Cast-in-place concrete work shall be in accordance with the paragraph entitled, "Concrete Work." Brick work shall be in accordance with the paragraph entitled, “Brick wall”. Make joints between concrete manholes and pipes entering manholes with the resilient connectors specified for this purpose; install in accordance with the recommendations of the connector manufacturer. Where a new manhole is constructed on an existing line, remove existing pipe as required to construct the manhole. Cut existing pipe so that the pipe ends are approximately flush with the interior face of manhole wall, but not protruding beyond into the manhole. Use resilient connectors as specified for pipe connectors to concrete manholes.

3.1.4 Concrete Work: Perform cast-in-place concrete work in accordance with Section 03 33 00, titled “CAST-IN-PLACE ARCHITECTURAL CONCRETE".

3.1.5 Up-rise Manhole, Drainage Grate, and Valve or Meter Cover: Structures shall be adjusted to new grade by using materials similar to that used in the original construction . Adjustment of valve boxes and meter boxes shall be made using methods provided by the manufacturer of the box.

3.1.6 Brickwork: Brickwork to fabricate catch basins and to rise up utilities shall conform to applicable UNE as specified in PG-3 for standard size. Cement mortar shall be mixed in accordance with NTE-FFL to obtain type mortar required. The mortar shall be used within 30 minutes after ingredients are mixed with water. Lay brick in running bond. Completely fill joints between bricks with mortar. Form bed joints of a thick layer of mortar slightly furrowed. Place brick carefully without disturbing brick previously laid. Dry or butt joints will not be permitted. Carry masonry up level and plumb. Furnish and use story poles or gage rods throughout the work. Changes in coursing or bonding after the work is started will not be permitted. Do not carry one section of the wall up in advance of the others. Step back unfinished work for joining with new work. Toothing will not be permitted. Check heights of masonry to maintain the level of the wall. Handle masonry units with care to avoid chipping, cracking, and spalling of faces and edges. Upon completion of masonry work and before cleaning, cut out defective mortar joints and tuck point joints and all holes solidly with pre-hydrated mortar. Clean exposed masonry surfaces with clear water and stiff fiber brushes and rinse with clear water. Where stains, mortar, or other soil remain, continue scrubbing with warm water and detergent.

3.1.6.1 Exterior Finish:

a. Surface Preparation: Clean wall surfaces of all projections, and other foreign matter. Wet surfaces thoroughly with a fine fog spray of clean water to procure a uniformly moist condition.

b. Workmanship: Apply finishing mortar coat of 2 cm thickness to the total surface.

3.1.7 Culvert Construction:

3.1.7.1 Rip-Rap Channel Liner: Construct rip-rap rock protection on bedding material in areas indicated on contract drawing, Plate #4 to the lines and thicknesses specified to dissipate stream energy and prevent channel erosion. Place single layer of rip-rap in mortar bedding and mortar all joints.

3.1.7.2 Preparation: Trim and dress indicated areas to conform to cross sections, lines and grades shown within a tolerance of 3 cm (0.l ft).

3.1.7.3 Bedding Placement: Spread bedding material uniformly to a thickness of at least 7.5 cm (3 in) on prepared subgrade as indicated. Compaction of bedding is not required. Finish bedding to present even surface free from mounds and windrows.

3.1.7.4 Stone Placement: Place rock for rip-rap on prepared bedding material to produce a well graded mass with the minimum practicable percentage of voids in conformance with lines and grades indicated. Distribute larger rock fragments, with dimensions extending the full depth of the rip-rap throughout the entire mass and eliminate "pockets" of small rock fragments. Rearrange individual pieces by mechanical equipment or by hand as necessary to obtain the distribution of fragment sizes specified above. For grouted rip-rap, hand-place surface rock with open joints to facilitate grouting and do not fill smaller spaces between surface rock with finer material. Finished thickness of rip-rap channel liner shall average 20.0 cm (8 in).

3.1.7.5 Grouting: Prior to grouting, wet rip-rap surfaces. Grout rip-rap in successive longitudinal strips, approximately 3 m (10 ft) in width, commencing at the lowest strip and working up the slope. Distribute grout to place of final deposit and work into place between stones with brooms, spades, trowels, or vibrating equipment. Take precautions to prevent grout from penetrating bedding layer. Protect and cure surface for a minimum of 7 days.

3.1.8 Metal Work:

3.1.7.1 Workmanship and Finish: Perform metal work so that workmanship and finish will be equal to the best practice in modern structural shops and foundries. Form iron to shape and size with sharp lines and angles. Do shearing and punching so that clean true lines and surfaces are produced. Make castings sound and free from warp, cold shuts, and blow holes that may impair their strength or appearance. Give exposed surfaces a smooth finish with sharp well-defined lines and arises. Provide rabbets, lugs, and brackets wherever necessary for fitting and support.

3.1.8.2 Field Painting: After installation, clean cast-iron frames, covers, gratings, and steps not buried in masonry or concrete to bare metal of mortar, rust, grease, dirt, and other deleterious materials and apply a coat of bituminous paint.

3.2 BACKFILLING & COMPACTION:

3.2.1 Backfill as specified in Section 31 23 00.00 20, titled "EXCAVATION AND FILL".

3.3 FIELD QUALITY CONTROL:

3.3.1 Field Tests and Inspections: The Contracting Officer will conduct field inspections and witness field tests specified in this section. The Contractor shall perform field tests and provide labor, equipment, and incidentals required for testing, except that water and electric power needed for field tests, where required, will be furnished by the Government. Be able to produce evidence, when required, that each item of work has been constructed properly in accordance with the drawings and specifications.

3.3.2 Pipeline Testing: Check each straight run of pipeline for gross deficiencies by holding a light in a manhole; it shall show a practically full circle of light through the pipeline when viewed from the adjoining end of line.

3.3.3 Field Tests for Concrete: Field testing requirements are covered in Section 03 33 00, titled "CAST-IN-PLACE ARCHITECTURAL CONCRETE".

***** END OF SECTION *****

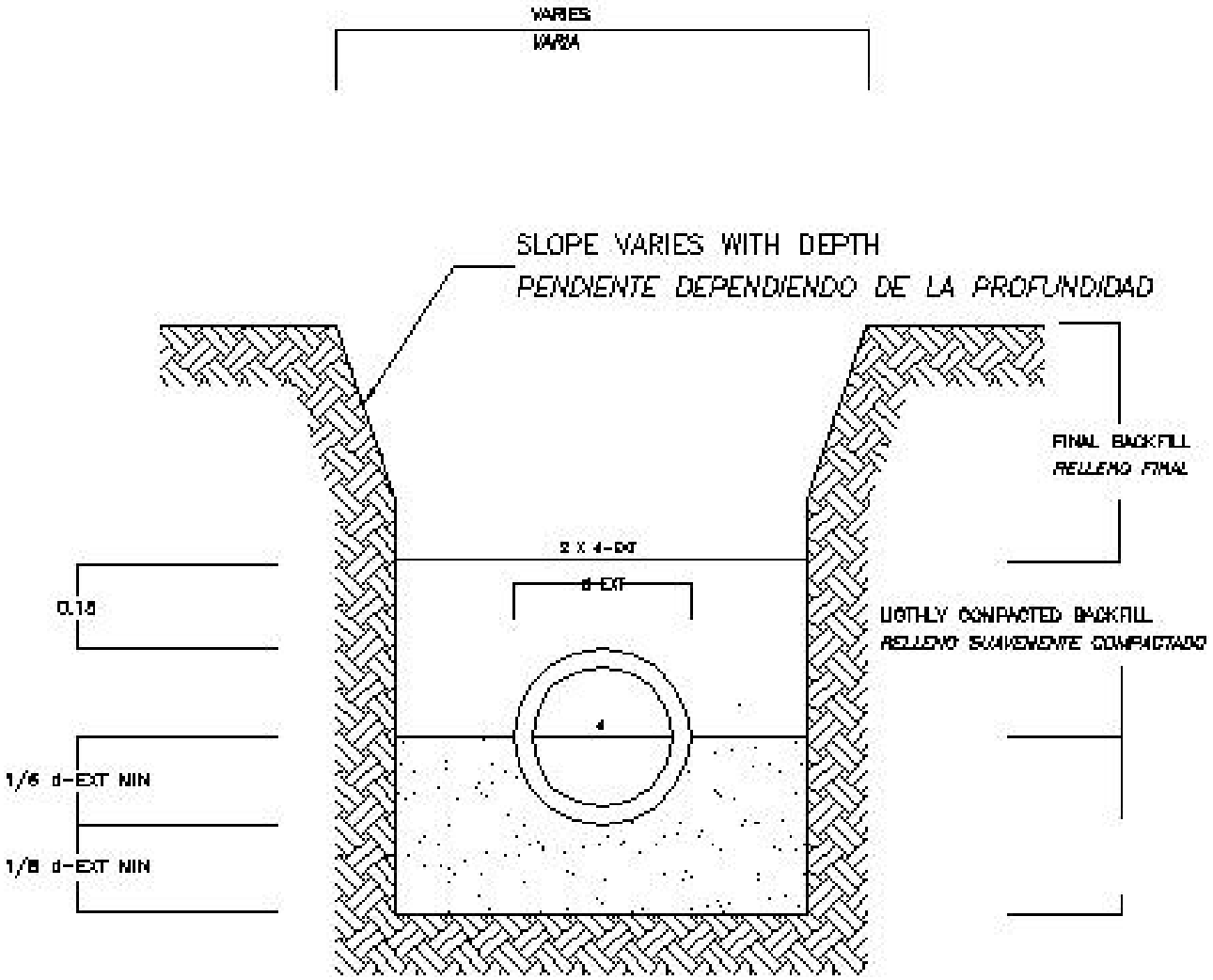

STORM DRAINAGE PIPE DETAIL

DETALLE DE TUBERIA DE DESAGUE PLUVIAL

DEPARTMENT OF THE NAVY NAVFACENGCOM

NAVAL STATION ROTA, SPAIN

PLATE#1

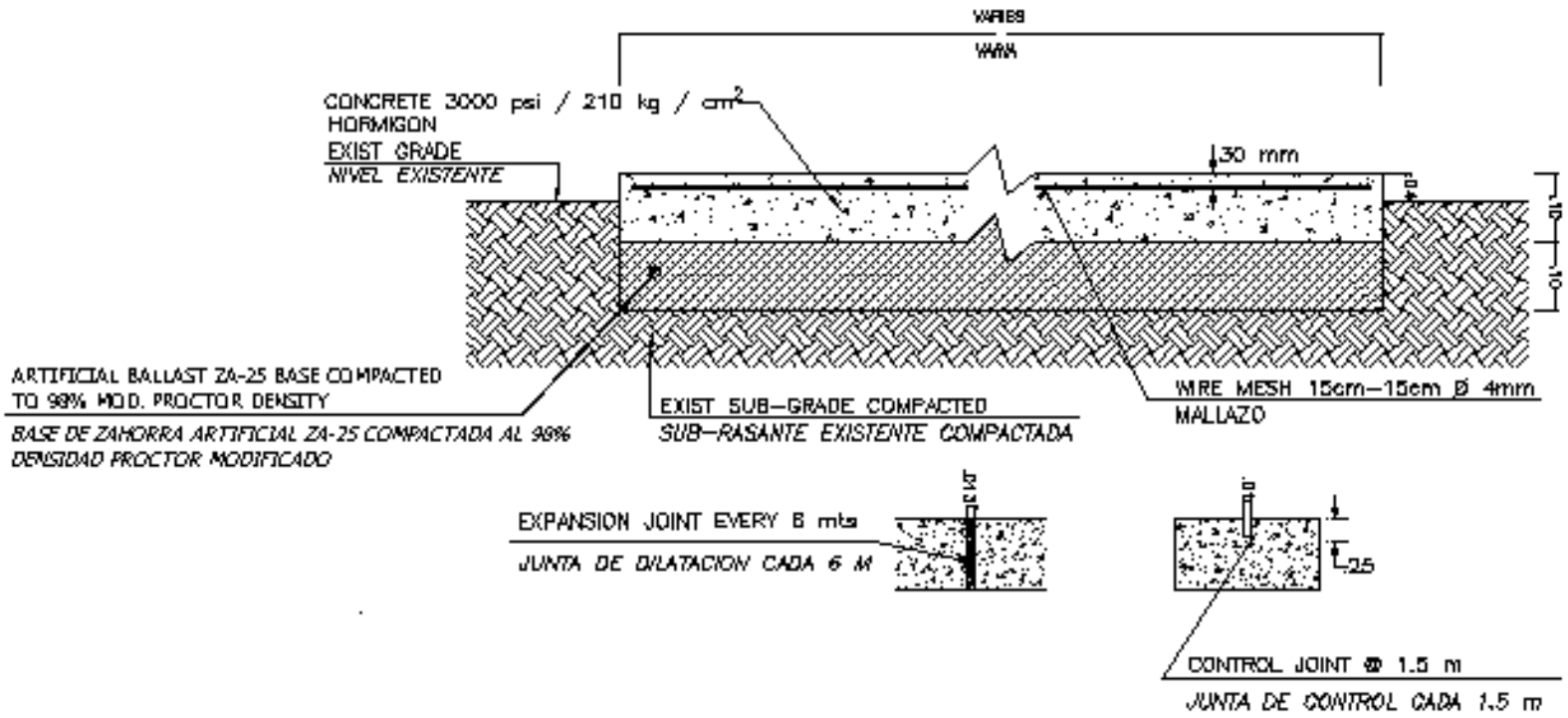

CONCRETE SIDEWALK DETAIL (TYPICAL)
DETALLE DE ACERA DE HORMIGON (TIPICA)

DEPARTMENT OF THE NAVY NAVFACENGCOM
NAVAL STATION ROTA, SPAIN

PLATE # 18

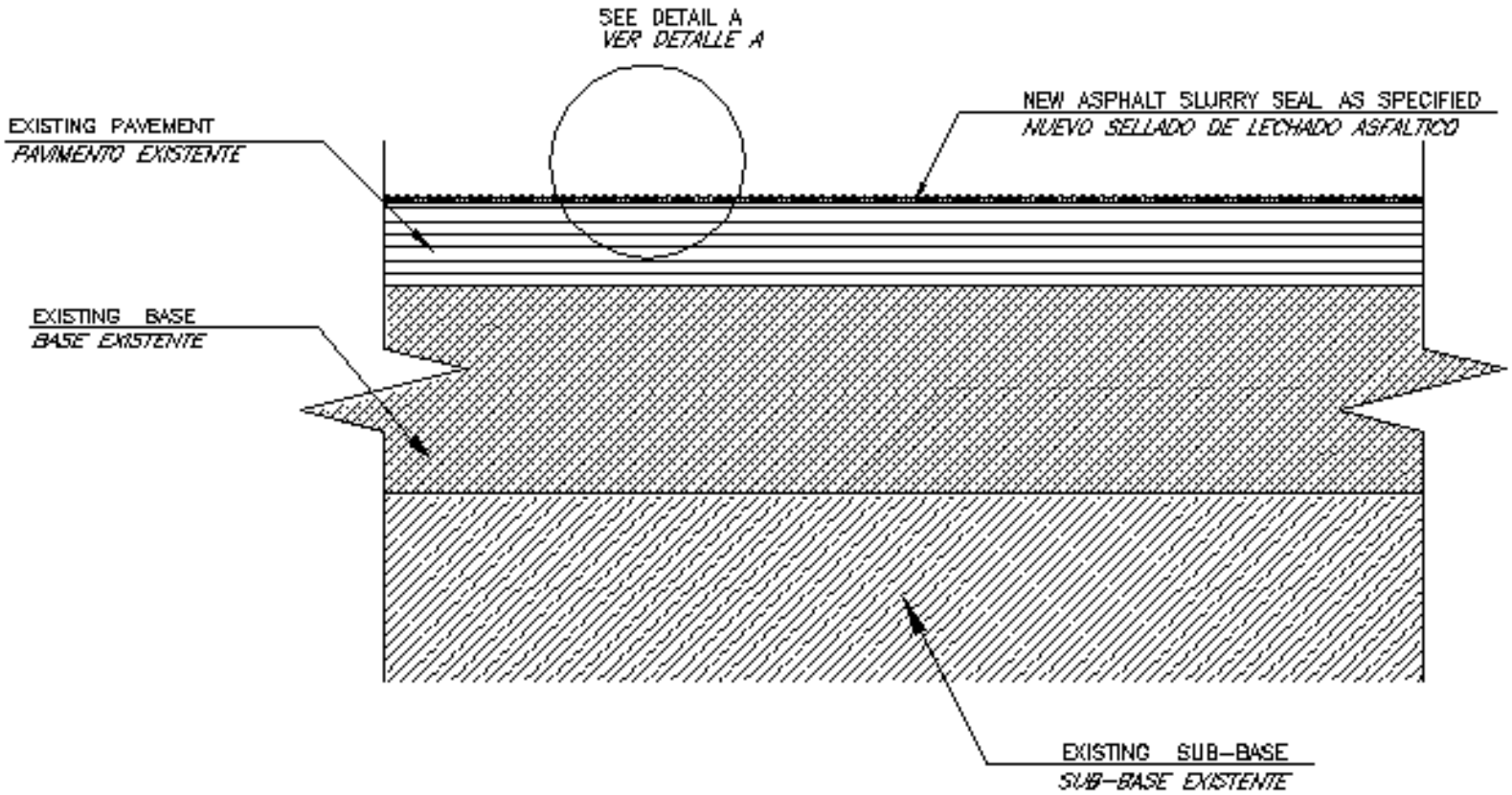

BITUMINUOS ASPHALT PAVEMENT SLURRY SEAL DETAIL (TYPICAL)

DETALLE DE LECHADA BITUMINOSA SOBRE PAVIMENTO ASFALTICO (TIPICO)

DETAIL A
DETALLE A

DEPARTMENT OF THE NAVY NAVFACENGCOM

NAVAL STATION ROTA, SPAIN

PLATE # 17

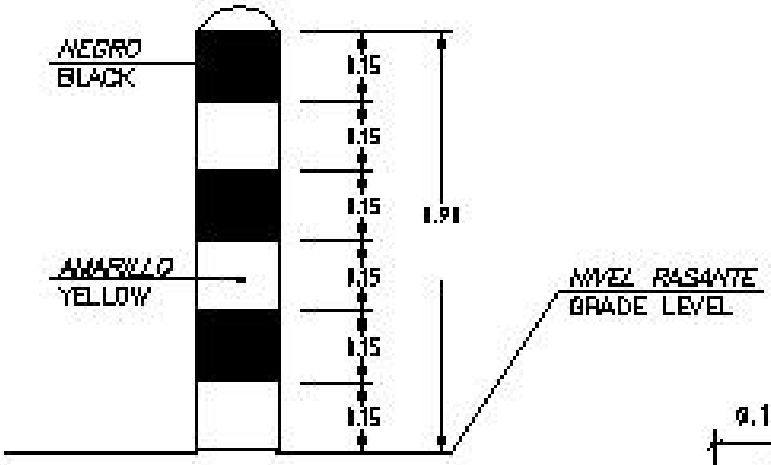

DETALLE DE PINTURA

PAINT DETAIL

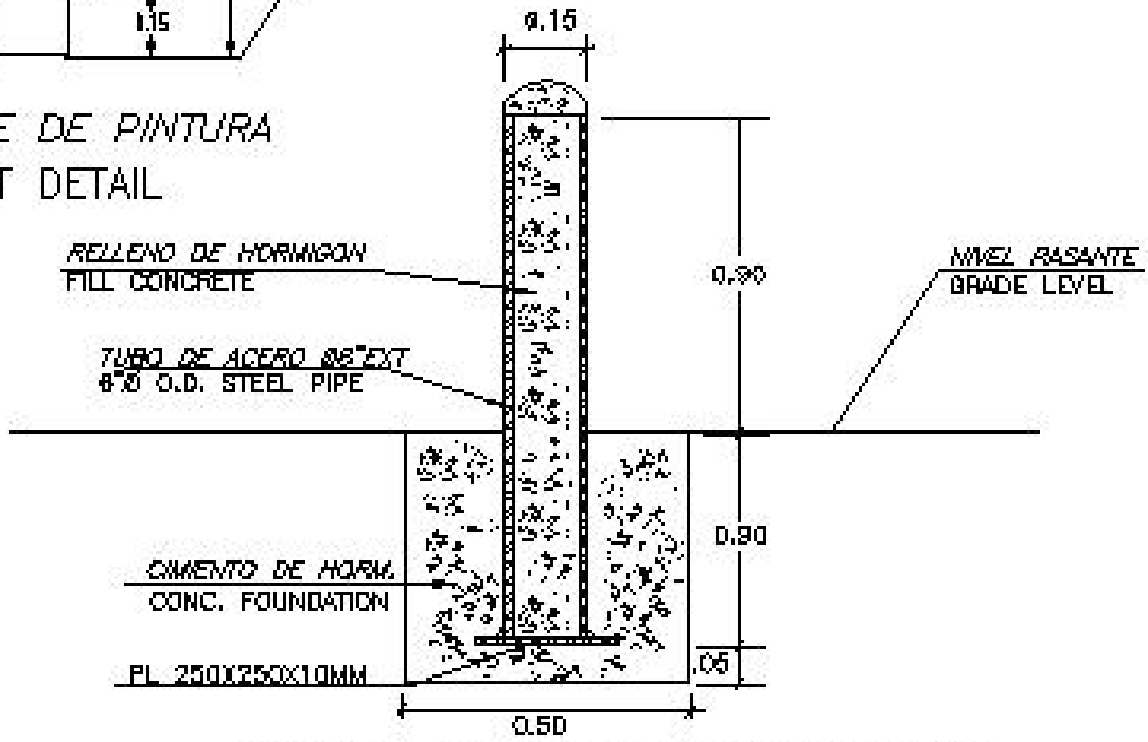

DETALLE DE POSTE DE PROTECCION

GUARD POST DETAIL

SIN ESCALA
NO SCALE

DEPARTMENT OF THE NAVY NAVAL STATION ROTA, SPAIN	NAVFACENGCOM
	PLATE# 16

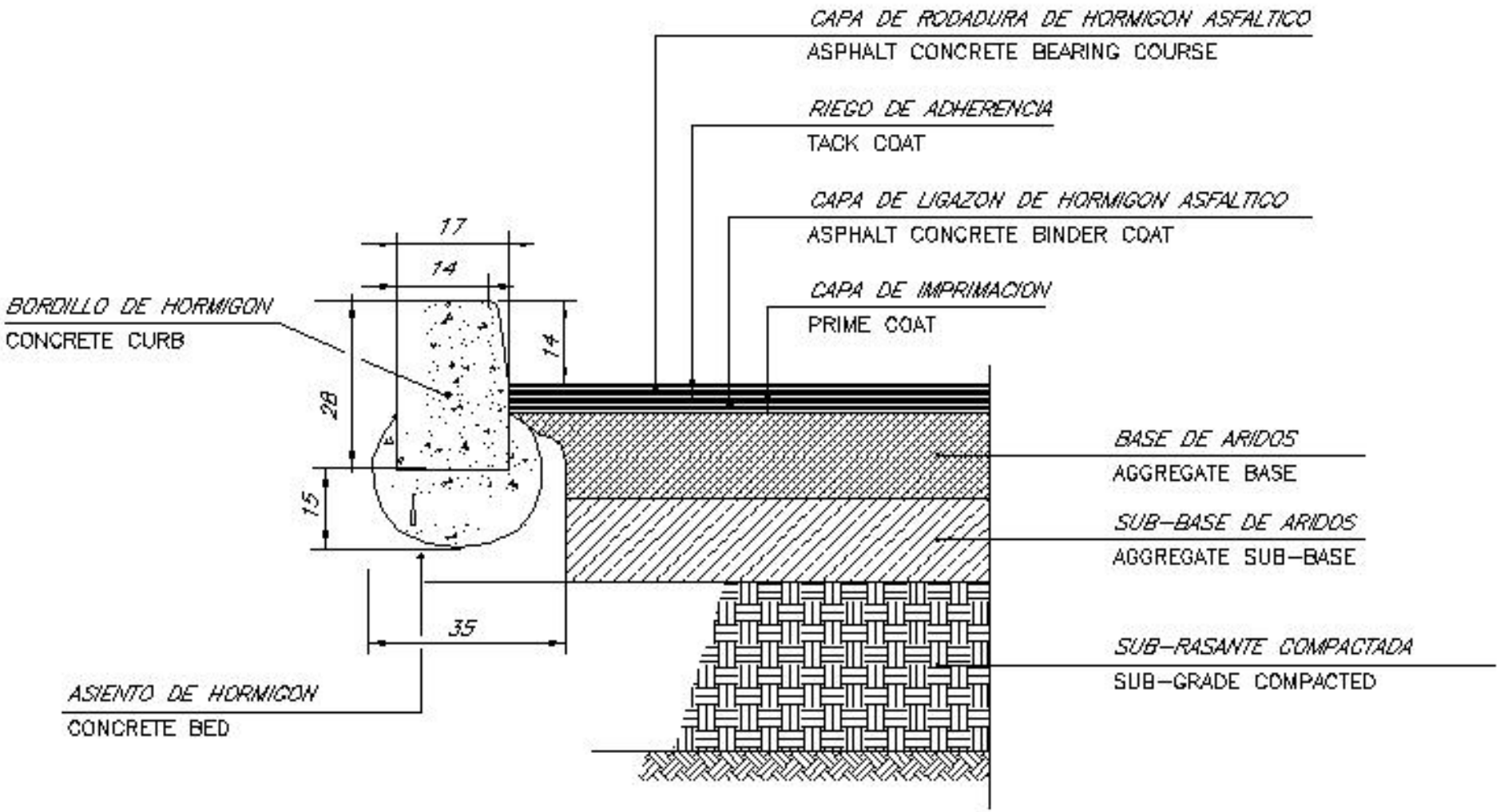

DETALLE DE BORDILLO

CURB DETAIL

SIN ESCALA
NO SCALE

DEPARTMENT OF THE NAVY NAVFACENGCOM
NAVAL STATION ROTA, SPAIN

PLATE# 15

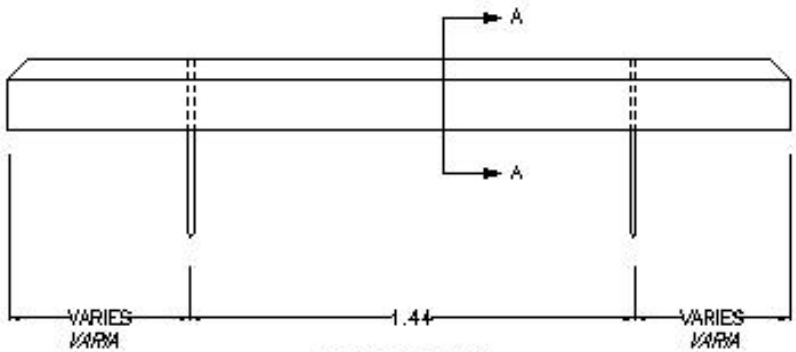

ELEVATION
ALZADO

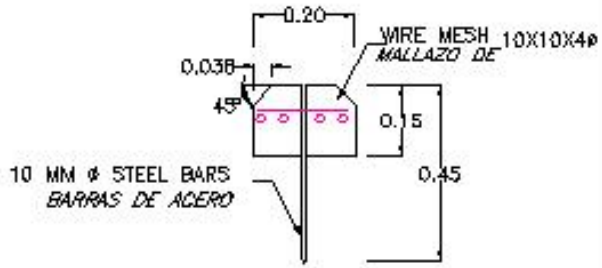

CONCRETE WHEEL STOP DETAIL (TYPICAL)
DETALLE DE PARAGOLPES DE HORMIGON (TIPICO)

DEPARTMENT OF THE NAVY NAVFACENGCOM
NAVAL STATION ROTA, SPAIN

PLATE# 14

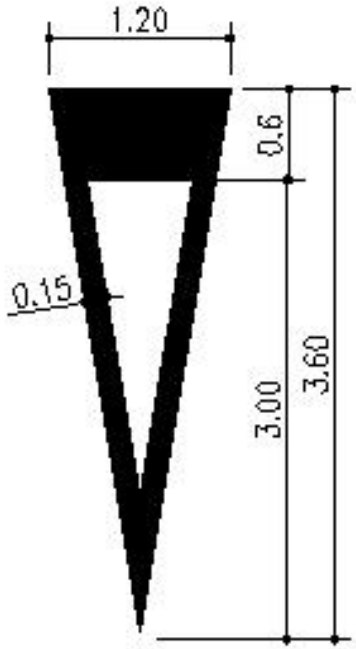

LINE WIDTH SHALL BE THE SAME AS ROAD LINES (4").
EL ANCHO DE LINEA SERA LA MISMA QUE ANCHO DE LAS LINEAS DE CARRATERA (10 cm.).

YIELD MARKING (TYICAL)
MARCA DE CEDA EL PASO (TIPICO)

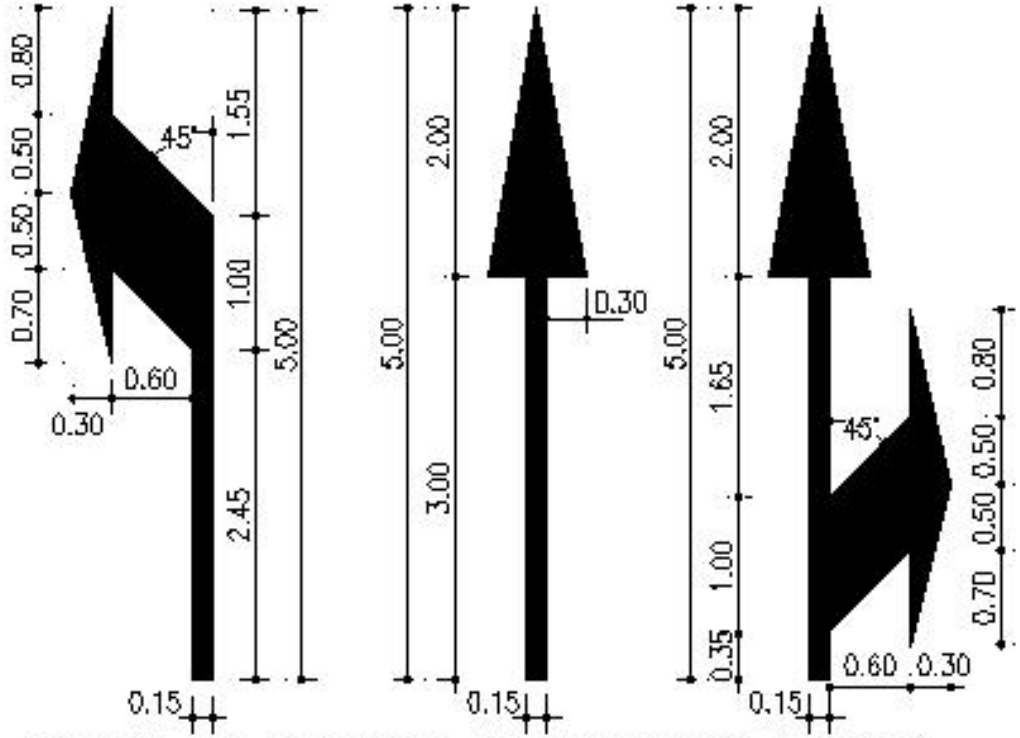

MARCAS DE FLECHAS DE DIRECCION (TIPICO)

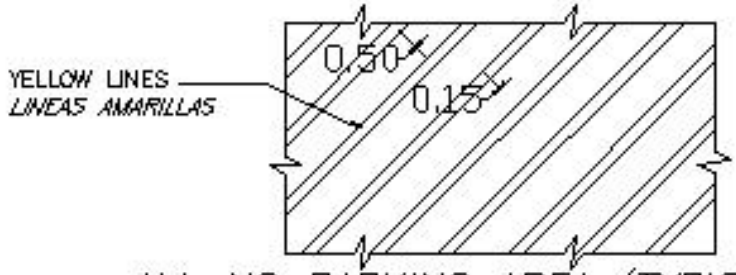

ALL NO PARKING AREA (TYPICAL)
AREA DE NO APARCAR (TIPICO)

BITUMINOUS ASPHALT PAVEMENT PAINT MARKINGS DETAILS (TYPICAL)
DETALLE DE MARCA DE PINTURA EN PAVIMENTO ASFALTICO (TIPICO)

DEPARTMENT OF THE NAVY NAVFACENGCOM
NAVAL STATION ROTA, SPAIN

PLATE# 13

NO PARKING

LETTERS SHALL BE NO MORE THAN 18" TALL
LAS LETRAS DE NO SERAN MAS ALTAS DE 45 cm

LETTERS SHALL HAVE SAME WIDTH AS ROAD LINES (4").
LAS LETRAS TENARAN EL MISMO ANCHO QUE LAS LINEAS DE CARRETERA (10 cm.)

LETTERS SHALL BE SPACED PROPORTIONATE TO EACH OTHER
LAS LETRAS ESTARAN ESPACIADAS PROPORCIONALMENTE

NO PARKING MARKING (TYPICAL)
MARCA DE NO APARCAR (TIPICO)

HANDICAP PARKING SIGN (TYPICAL)
SIMBOLO DE APARCAMIENTO DE MINUSVALIDOS (TIPICO)

LETTERS SHALL HAVE SAME WIDTH AS ROAD LINES (4").
LAS LETRAS TENARAN EL MISMO ANCHO QUE LAS LINEAS DE CARRETERA (10 cm.)

LETTERS SHALL BE SPACED PROPORTIONATE TO EACH OTHER
LAS LETRAS ESTARAN ESPACIADAS PROPORCIONALMENTE

STOP MARKING (TYPICAL)
MARCA DE PARADA (TIPICO)

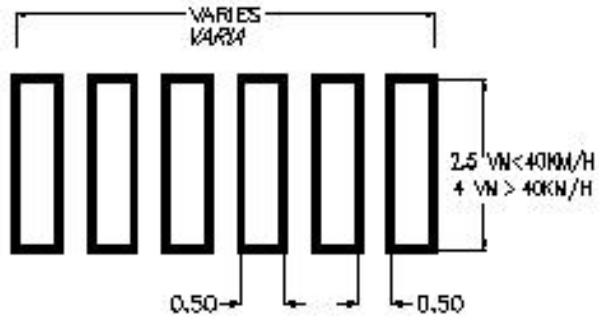

CROSSWALK MARKING (TYPICAL)
MARCA DE PASO DE CEBRA (TIPICO)

BITUMINOUS ASPHALT PAVEMENT PAINT MARKING DETAILS (TYPICAL)
DETALLE DE MARCAS DE PINTURA EN PAVIMENTO ASFALTICO (TIPICO)

DEPARTMENT OF THE NAVY NAVFACENGCOM
NAVAL STATION ROTA, SPAIN

PLATE# 12

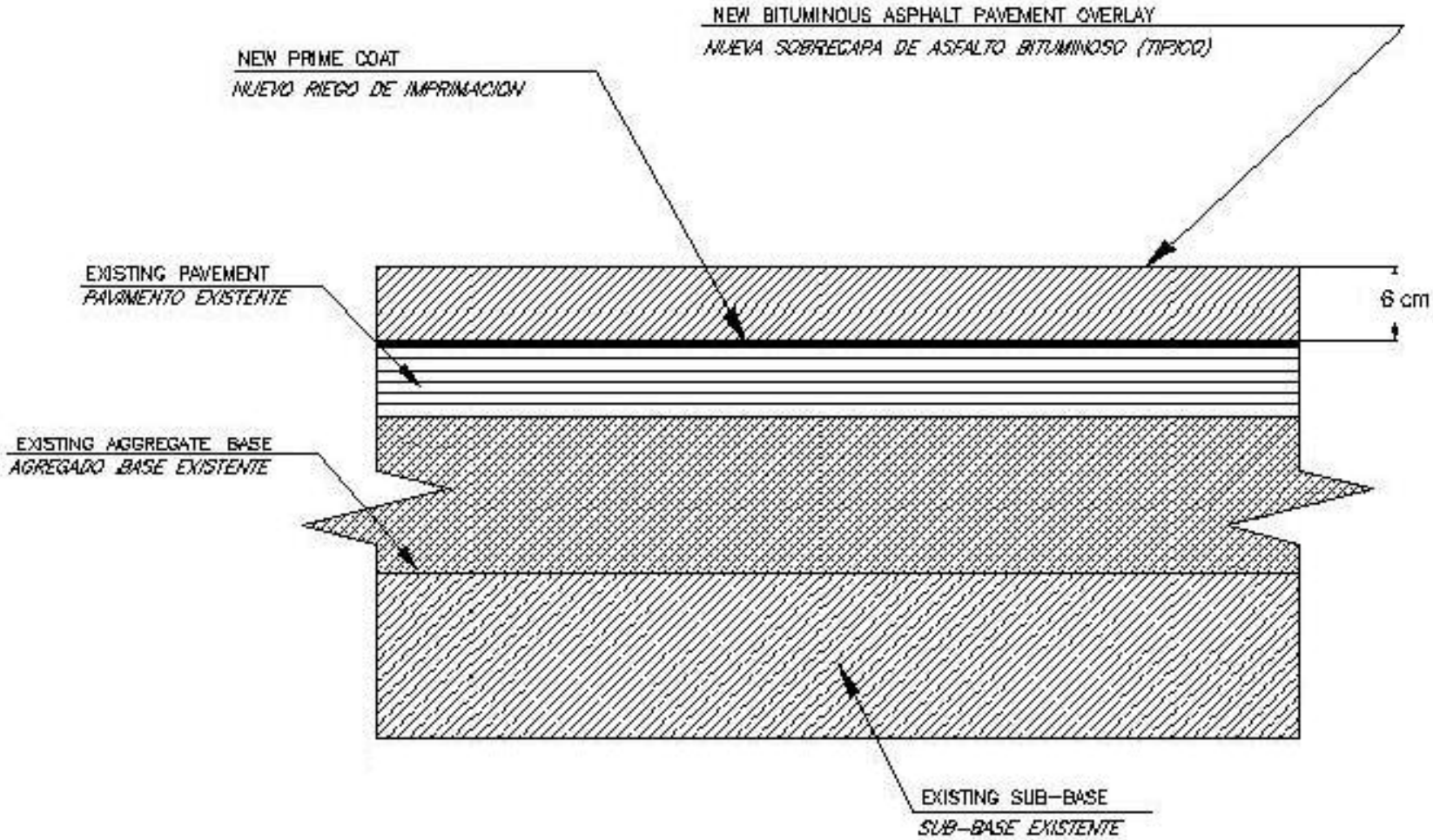

BITUMINUOS ASPHALT PAVEMENT OVERLAY DETAIL (TYPICAL)
DETALLE SOBRE CAPA EN PAVIMENTO ASFALTICO (TIPICO)

DEPARTMENT OF THE NAVY NAVFACENGCOM
NAVAL STATION ROTA, SPAIN

PLATE# 11

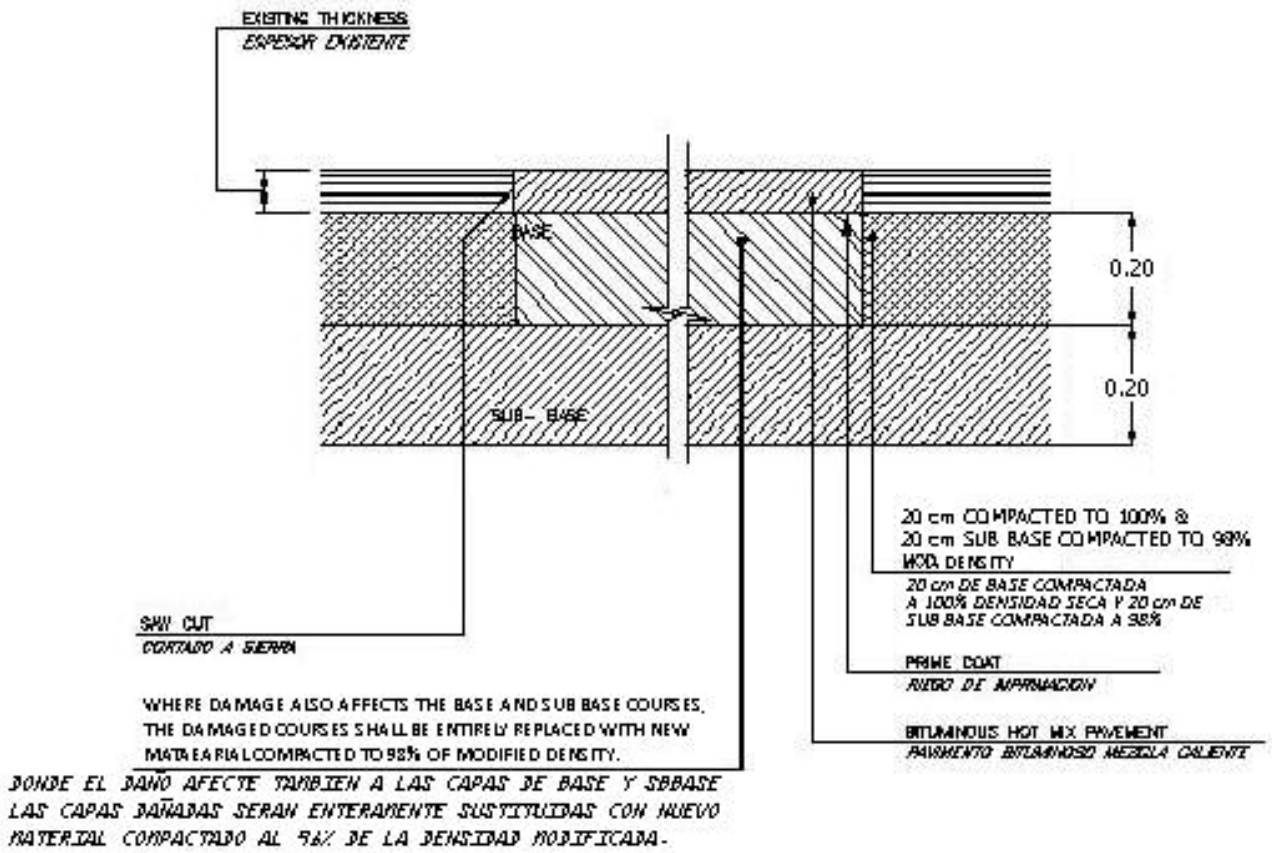

REPAIR DAMAGED PAVEMENT DETAIL (TYPICAL)
DETALLE TIPICO DE REPARACION DE PAVIMENTO

DEPARTMENT OF THE NAVY NAVFACENGCOM
NAVAL STATION ROTA, SPAIN

PLATE# 10

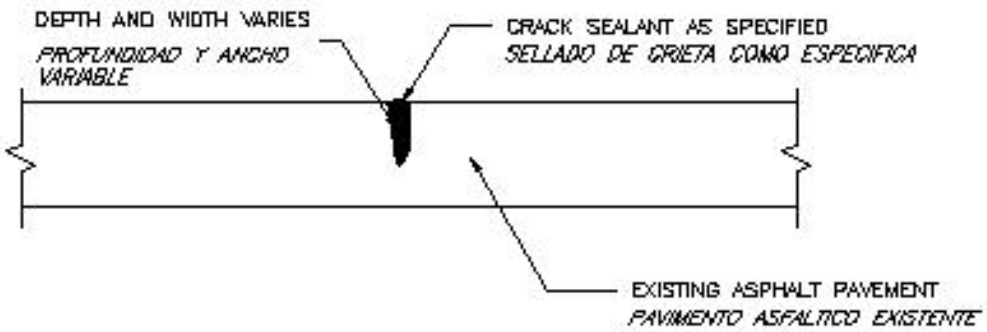

BITUMINOUS ASPHALT PAVEMENT CRACK SEALING DETAIL (TYPICAL)

DETALLE DE SELLADO DE GRIETAS EN PAVIMENTO ASFALTICO (TIPICO)

DEPARTMENT OF THE NAVY NAVFACENGCOM

NAVAL STATION ROTA, SPAIN

PLATE# 9

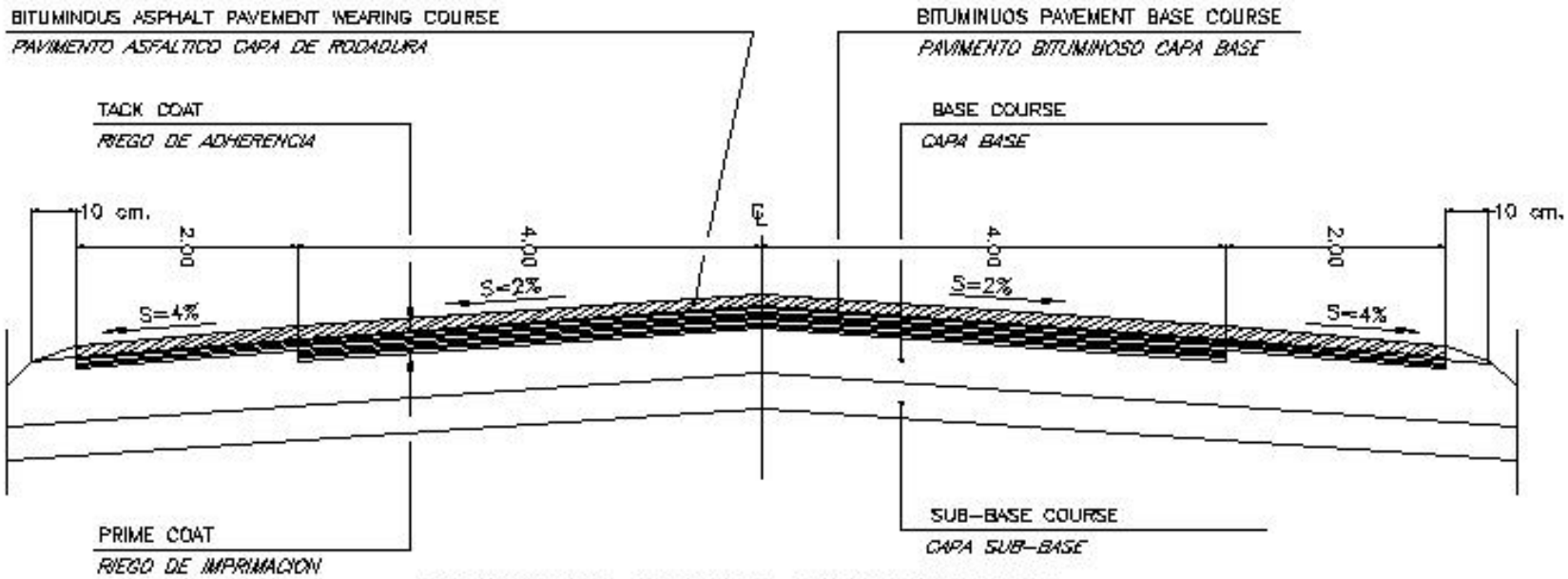

BITUMINOUS ASPHALT PAVEMENT ROAD
CROSS SECTION DETAIL (TYPICAL)

DETALLE DE SECCION DE CARRETERA
DE PAVIMENTO ASFALTICO (TIPICA)

DEPARTMENT OF THE NAVY NAVFACENGCOM
NAVAL STATION ROTA, SPAIN

PLATE# 8

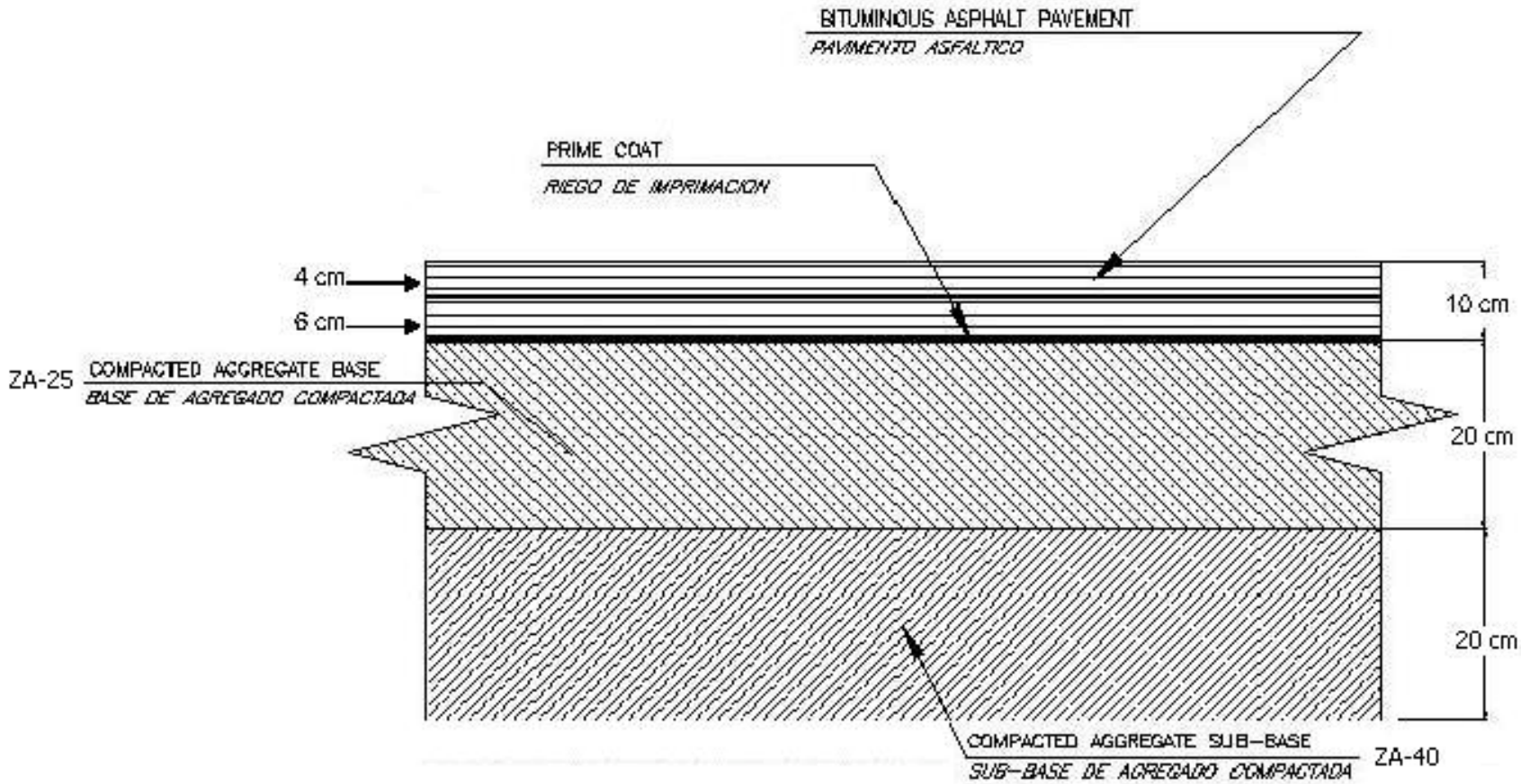

BITUMINOUS ASPHALT PAVEMENT DETAIL (TYPICAL)

DETALLE DE PAVIMENTO ASFALTICO (TIPICA)

DEPARTMENT OF THE NAVY NAVFACENGCOM

NAVAL STATION ROTA, SPAIN

PLATE# 7

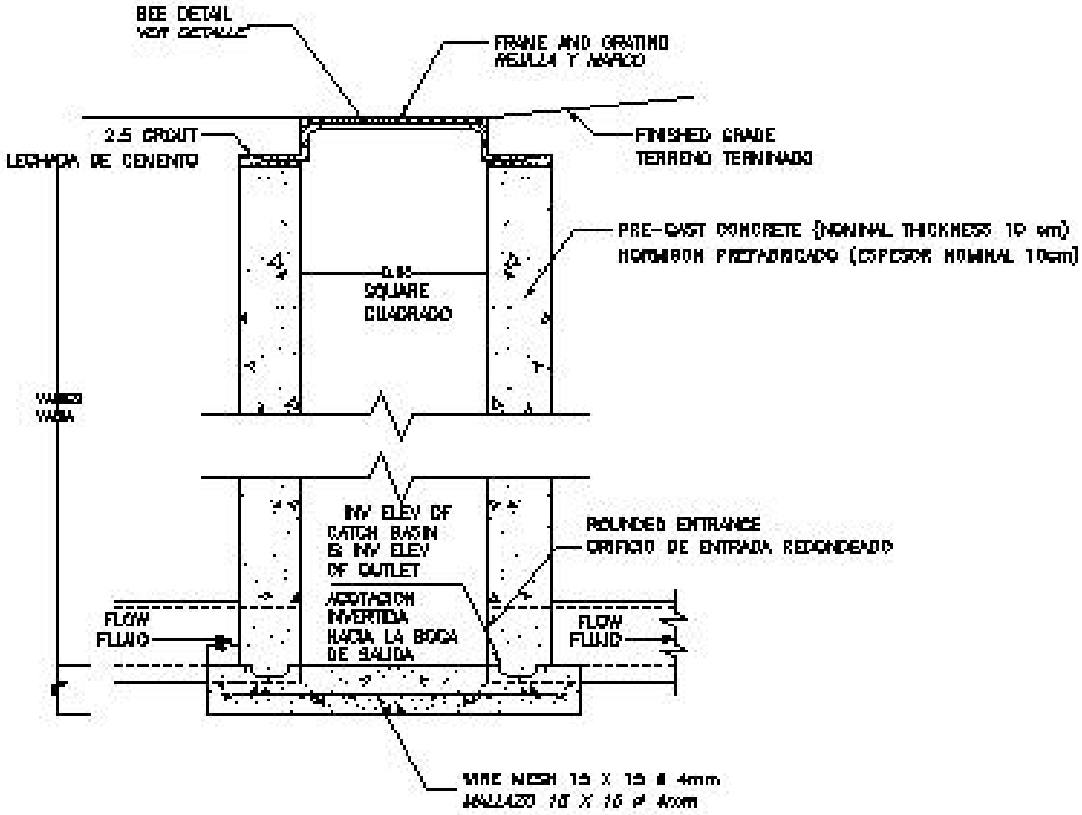

STORM DRAINAGE CATH BASIN DETAIL (TYPICAL)

DETALLE DE SUMIDERO (TIPICO)

NOTE: PRE-CAST CATH BASIN SHALL CONFORM TO ASTM-C-478

NOTA: LAS SECCIONES DE LOS SUMIDEROS CUMPLIRAN CON LA NORMA ASTM-C-478

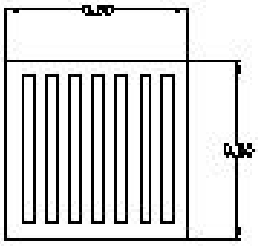

GRATING DETAIL
DETALLE DE REJILLA

DEPARTMENT OF THE NAVY NAVFACENGCOM

NAVAL STATION ROTA, SPAIN

PLATE# 6

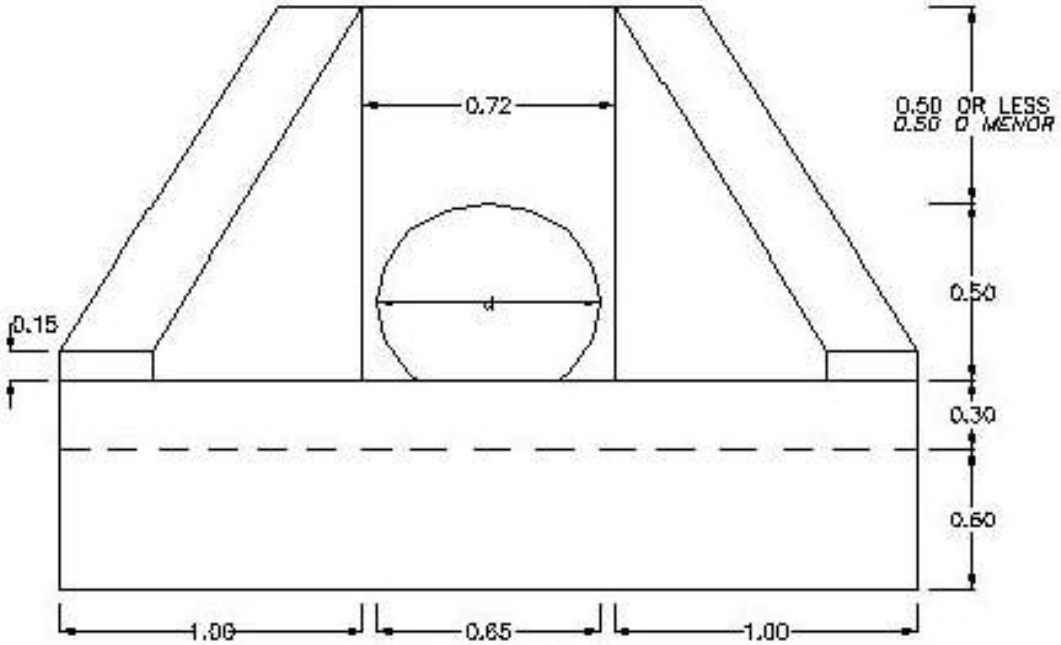

ELEVATION
ALZADO

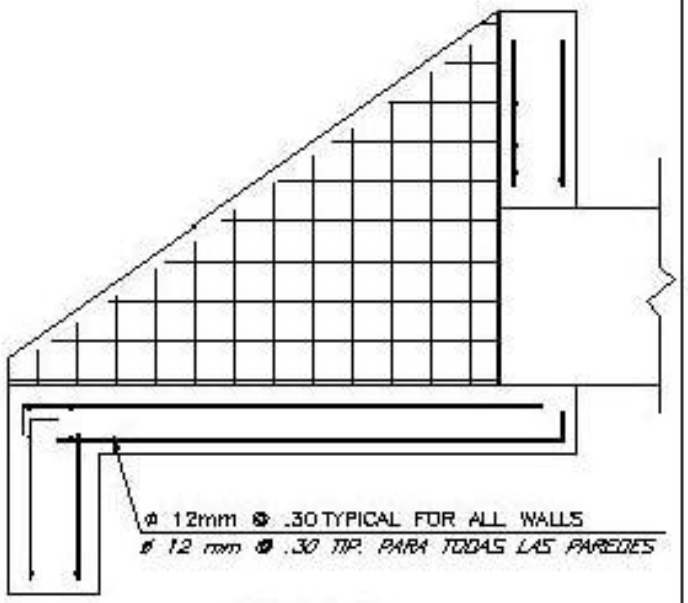

SECTION
SECCION

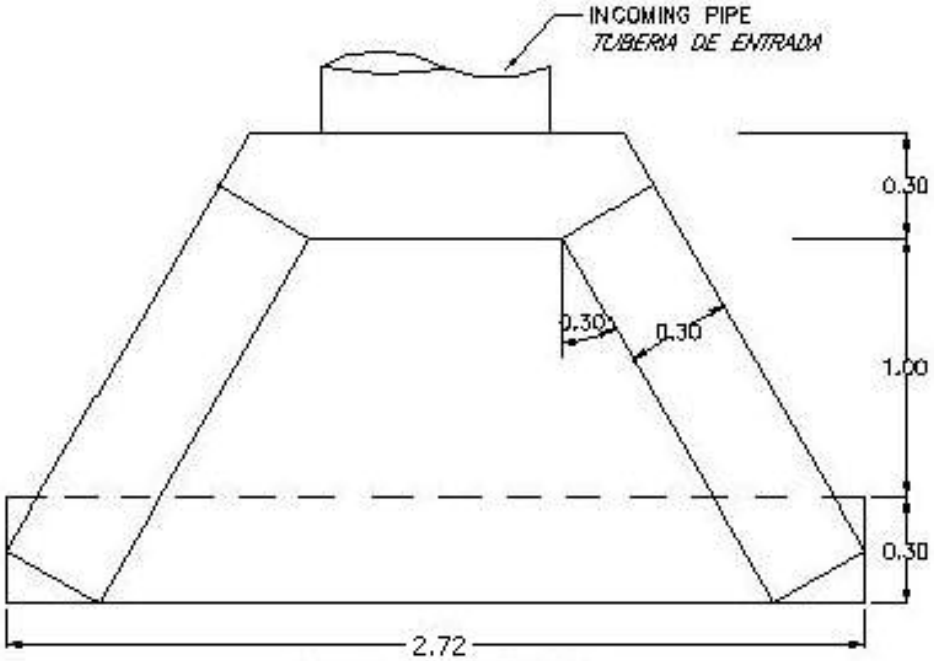

PLAN / *PLANTA*

STORM DRAINAGE HEADWALL DETAIL (TYPICAL)

DETALLE DE MURO REMATE DE CUNETA (TIPICO)

DEPARTMENT OF THE NAVY NAVFACENGCOM

NAVAL STATION ROTA, SPAIN

PLATE# 5

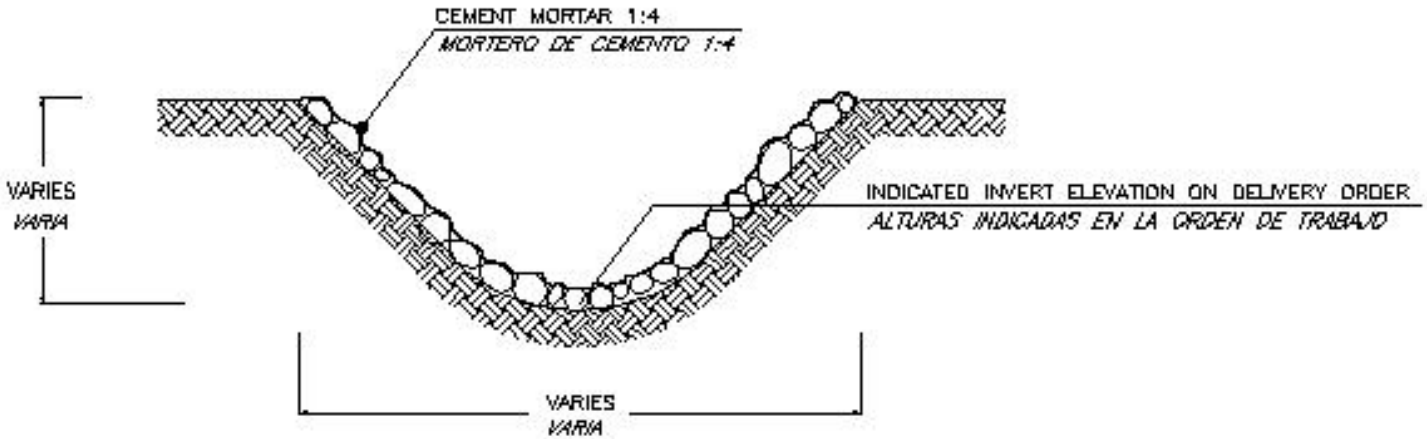

DIMENSIONS AS SPECIFIED ON DELIVERY ORDER
DIMENSIONES COMO ESPECIFIQUE LA ORDEN DE TRABAJO

RIP–RAP STORM DRAINAGE CHANNEL LINING (TYPICAL)
DETALLE DE ENCACHADO DE CUNETA (TIPICO)

NOTE:
NOTA:

RIP RAP AGGREGATE SIZE: 10cm – 18cm
(NO STONE SHALL HAVE A DIMENSION LESS THAN 10cm)

TAMAÑO DEL ENCACHADO: 10cm – 18cm
(LA PIEDRA NO SERA MENOR DE 10cm)

AVERAGE RIP-RAP LINER THICKNESS SHALL BE 18cm.
ESPESOR MEDIO DEL ENCACHADO SERA DE 18cm.

DEPARTMENT OF THE NAVY NAVFACENGCOM
NAVAL STATION ROTA, SPAIN

PLATE# 4

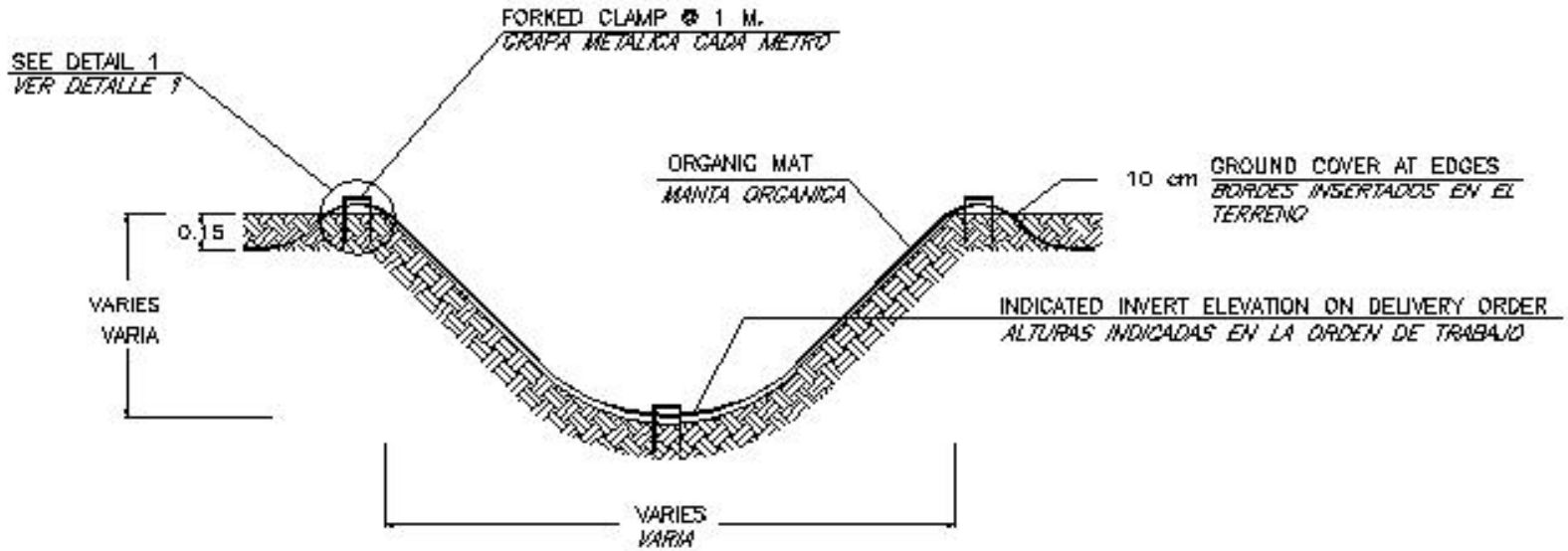

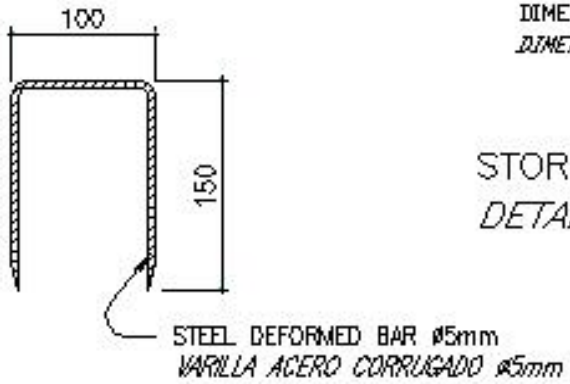

STORM DRAINAGE CHANNEL (TYPICAL)

DETALLE DE CUNETA (TIPICO)

FORKED CLAMP DETAIL (1)

DETALLE DE GRAPA METALICA

SCALE 1 : 100 DIMENSIONS IN MILLIMETERS

ESCALA DIMENSIONES EN MILIMETROS

DEPARTMENT OF THE NAVY NAVFACENGCOM

NAVAL STATION ROTA, SPAIN

PLATE# 3

NOTE:
NOTA:

1. CROWN OF INLET AND OUTLET TO BE SAME ELEVATION
2. *IGUAL ACOTACION DE LAS TUBERIAS DE ENTRADAS Y SALIDA*

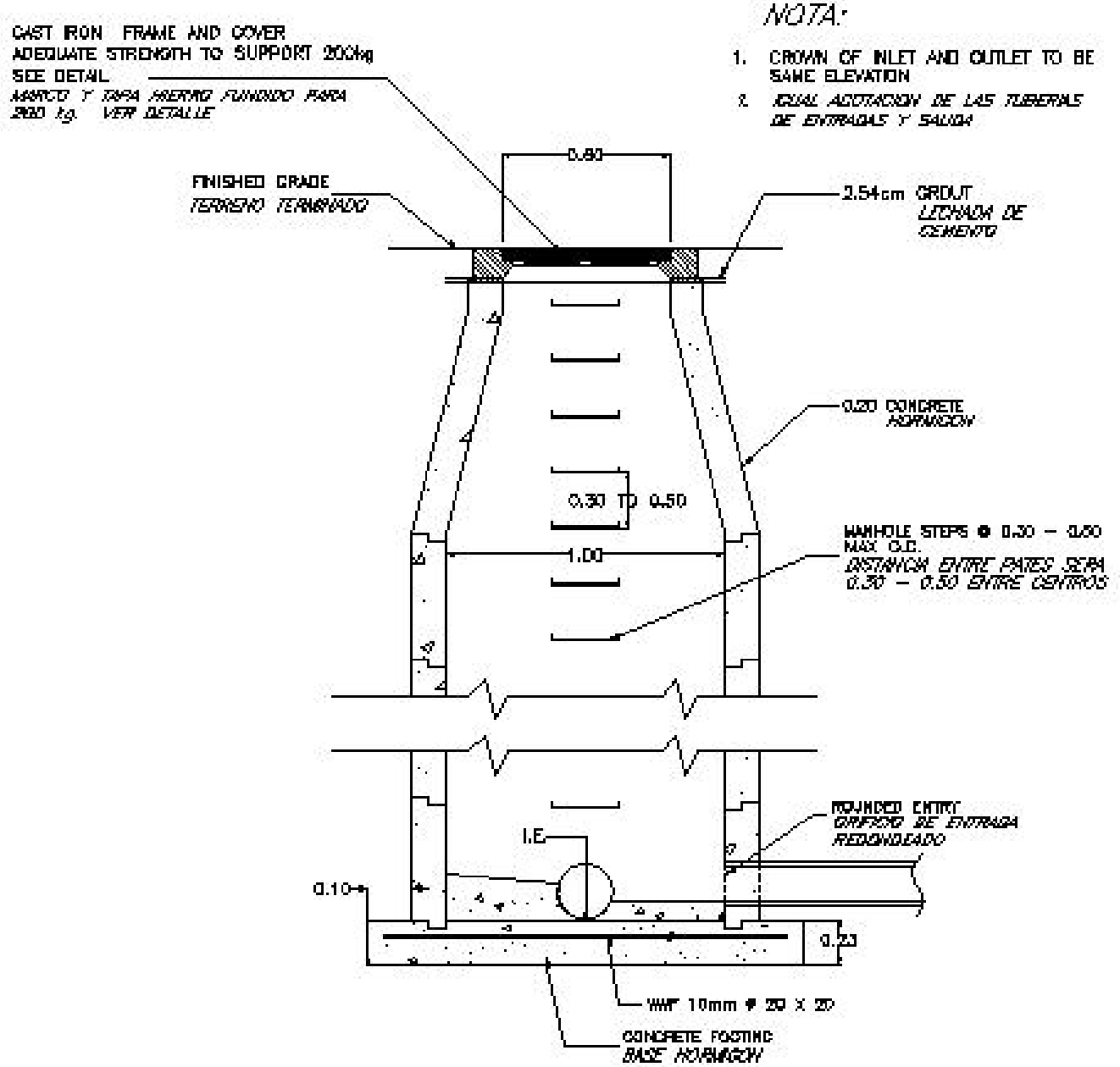

STORM SEWER MANHOLE DETAIL (TYICAL)
DETALLE DE ARQUETA DE COLECTOR DE AGUA (TIPICA)

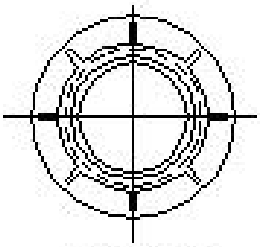

COVER DETAIL
DETALLE DE TAPA

DEPARTMENT OF THE NAVY — NAVFACENGCOM
NAVAL STATION ROTA, SPAIN

PLATE # 2

1. *CUBIERTA EXISTENTE – LIMPIAR Y REMOVER TODA LA GRAVA SUELTA*
   EXISTING ROOF – CLEAN AND REMOVE ALL LOOSE GRAVEL

2. *FORMAR PENDIENTE CON HORMIGON CELULAR PEND. MIN. 1,5% – JUNTAS @ 9.00m2*
   FORM SLOPE WITH CELULAR CONCRETE MIN. SLOPE 1,5% – JOINTS @ 9.00 SQ.m

3. *MORTERO DE NIVELACION – ESPESOR MIN. 1.5cm*
   LEVELLING MORTAR – MINIMUM THICKNESS 1.5cm

4. *IMPRIMAR CON ASFALTO*
   PRIME WITH ASPHALT

5. *REFORZAR CON TELA ASFALTICA VOLVIENDOLA SOBRE LA CAZOLETA*
   REINFORCE WITH ASPHALT SHEET TURNED INTO THE ROOF DRAIN SUMP

6. *IMPERMEABILIZAR CON DOS LAMINAS ASFALTICAS LA ULTIMA ACABADA EN SBS GRANULADO*
   WATEERPROOF WITH TWO ASPHALT SHEET LAYERS TOP ONE WITH SBS GRANULATE FINISH

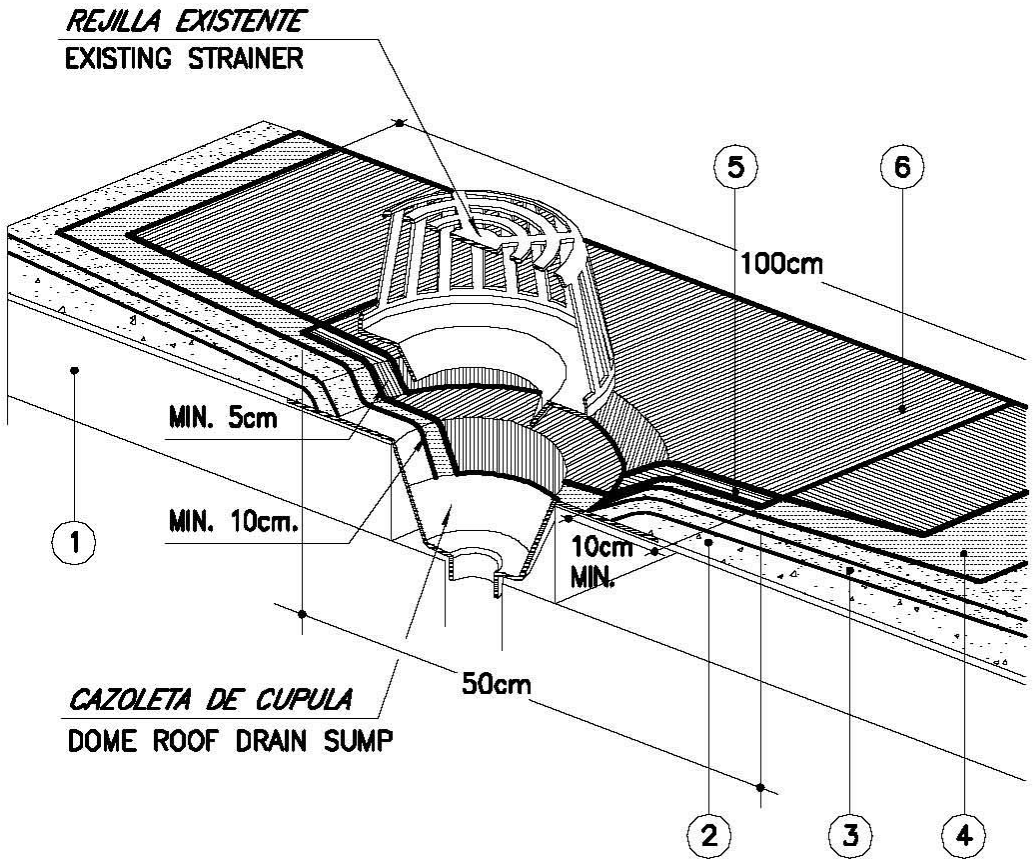

SUMIDERO EN CUBIERTA DE SBS GRANULADO
SBS GRANULATE SHEET ROOFING DRAIN

ESTE DETALLE ES APLICABLE TAMBIEN A OTROS TIPOS DE CUBIERTA
THIS DETAIL APLIES ALSO TO OTHER TYPES OF ROOFING

DEPARTMENT OF THE NAVY — NAVAL FACILITIES ENGINEERING COMMAND

NAVAL STATION ROTA, SPAIN

PLATE No. 16

1. *FORMAR PENDIENTE CON HORMIGON CELULAR*
   FORM SLOPE WITH CELLULAR SLOPE

2. *MORTERO DE NIVELACION*
   LEVELING MORTAR

3. *FORMAR CONTRAPENDIENTES*
   FORM CRICKETS

4. *IMPRIMAR CON ASFALTO*
   PRIME WITH ASPHALT

5. *IMPERMEABILIZAR CON DOS LAMINAS ASFALTICAS LA ULTIMA ACABADA EN SBS GRANULADO*
   WATERPROOF WITH TWO ASPHALT SHEET LAYERS TOP ONE WITH SBS GRANULATED FINISHED

6. *REFORZAR CON TELA ASFALTICA ACABADA EN SBS GRANULADO*
   REINFORCE WITH ASPHALT SHEET SBS GRANULATE FINISHED

7. *SELLAR CON MASILLA CAUCHO-SILICONA*
   SEAL WITH SILICONE RUBBER MASTIC

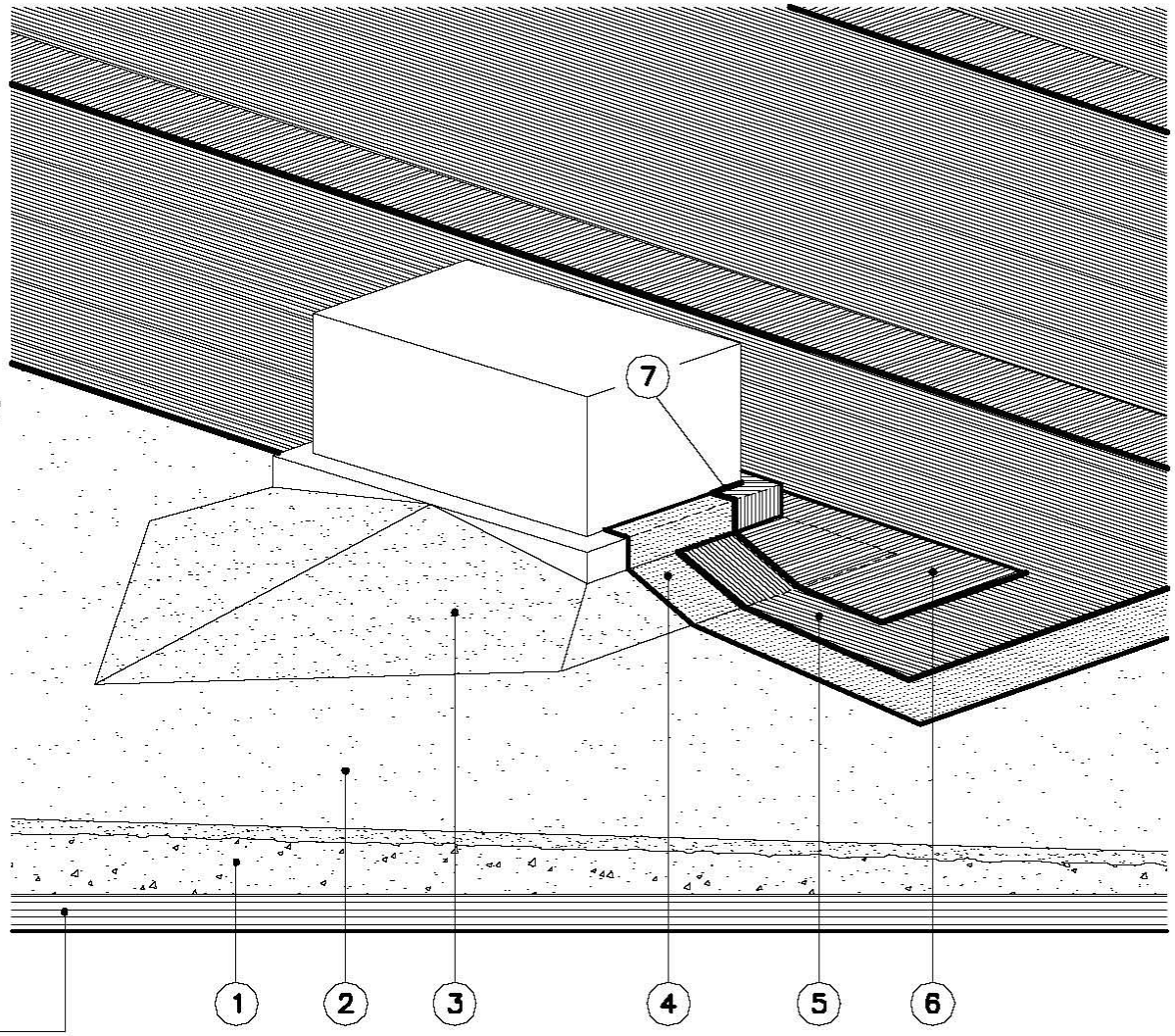

CUBIERTA EXISTENTE
EXISTING ROOF

ENCUENTROS DE EQUIPOS ELEVADOS SOBRE BASES CON CUBIERTAS DE SBS GRANUL
JUNCTION OF EQUIPMENT SUPPORTED ON PADS WITH SBS GRANULATED SHEET ROOFING

DEPARTMENT OF THE NAVY — NAVAL FACILITIES ENGINEERING COMMAND

NAVAL STATION ROTA, SPAIN

PLATE No. 15

1. *SELLAR CON MASILLA DE CAUCHO SILICONA*
   SEAL WITH SILICONE RUBBER MASTIC
2. *FORMAR PENDIENTE CON HORMIGON CELULAR*
   FORM SLOPE WITH CELLULAR SLOPE
3. *MORTERO DE NIVELACION*
   LEVELING MORTAR
4. *IMPRIMAR CON ASFALTO*
   PRIME WITH ASPHALT
5. *IMPERMEABILIZAR CON DOS LAMINAS ASFALTICAS LA ULTIMA ACABADA EN SBS GRANULADO*
   WATERPROOF WITH TWO ASPHALT SHEET LAYERS TOP ONE WITH SBS GRANULATED FINISH.
6. *ENVOLVER LA TUBERIA CON TELA ASFALTICA*
   WRAP THE PIPE WITH ASPHALT SHEET
7. *PROTEGER CON UNA PIEZA DE TELA ASFALTICA*
   PROTECT WITH A PIECE OF ASPHALT SHEET
8. *SELLAR CON MASILLA DE CAUCHO SILICONA*
   SEAL WITH SILICONE RUBBER MASTIC
9. *COLLARIN CON PARAGUAS ESTANCO DE CHAPA METALICA*
   DRAW BAND WITH WATERTIGHT SHEET METAL UMBRELLA
10. *SELLAR CON MASILLA DE CAUCHO SILICONA*
    SEAL WITH SILICONE RUBBER MASTIC

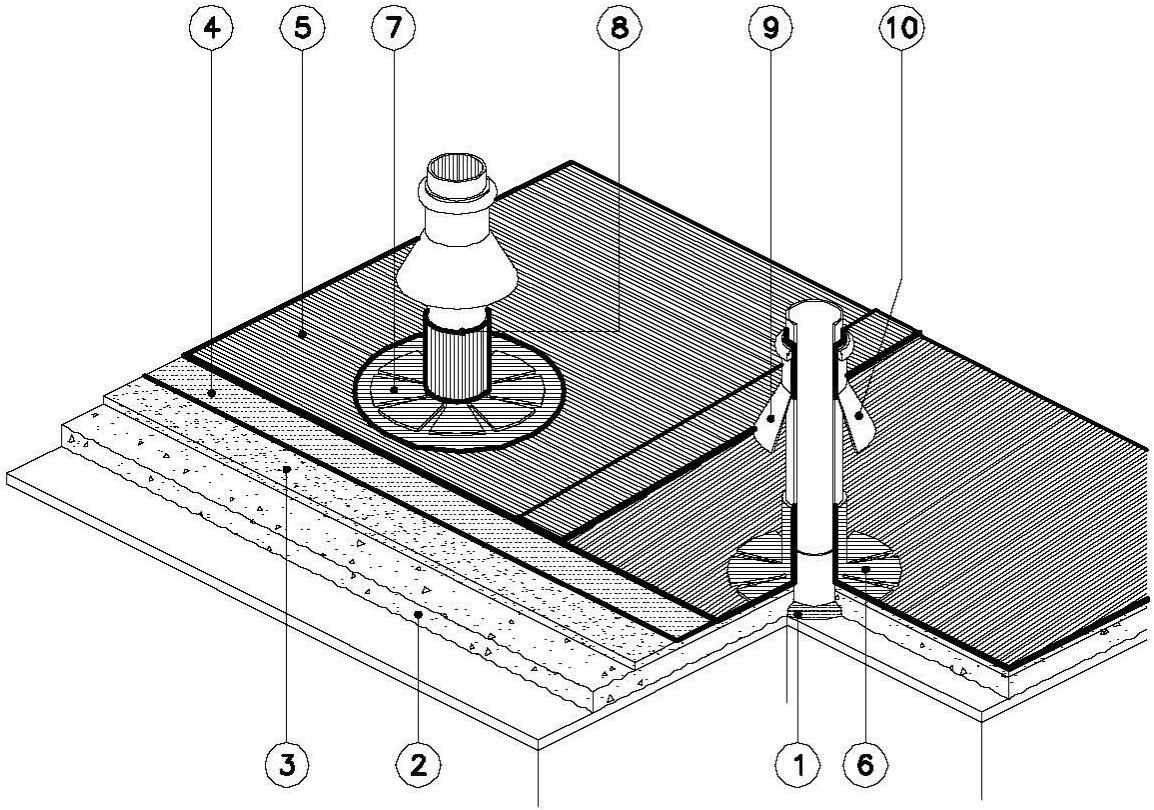

ENCUENTRO DE TUBERIAS CON CUBIERTAS DE SBS GRANULADO
JUNCTION OF PIPES WITH SBS GRANULATED SHEET ROOFING

ESTE DETALLE ES APLICABLE TAMBIEN A OTROS TIPOS DE CUBIERTA
THIS DETAIL APLIES ALSO TO OTHER TYPES OF ROOFING

DEPARTMENT OF THE NAVY — NAVAL FACILITIES ENGINEERING COMMAND

NAVAL STATION ROTA, SPAIN

PLATE No. 14

1. *LIMPIAR Y QUITAR TODA LA GRAVA SUELTA*
   CLEAN AND REMOVE ALL LOOSE GRAVEL

2. *FORMAR PENDIENTE CON HORMIGON CELULAR – PEND. MIN. 1% CON JUNTAS @ 9.00m2 Y ACABADO CON 1.5cm CON MORTERO DE REGULARIZACION.*
   FORM SLOPE WITH CELULAR CONCRETE – 1.5% MIN. SLOPE WITH JOINTS @ 9.00 SQ.m FINISH WITH 1.5cm LEVELING MORTAR

3. *ENFOSCAR PERIMETRALMENTE EL PETO Y FORMAR MEDIA CAÑA CON MORTERO DE CEMENTO*
   PERIMETRAL PLASTER THE PARAPET WALL AND FORM HALF-ROUND WITH CEMENT MORTAR

4. *IMPRIMAR CON ASFALTO*
   PRIME WITH ASPHALT

5. *IMPERMEABILIZAR CON LAMINA ASFALTICA POLIMERICA*
   WATERPROOF WITH POLYMERIC ASPHALT SHEET

6. *COLOCAR TELA ASFALTICA AUTOPROTEGIDA CON SBS GRANULADO*
   PLACE SELF PROTECTED ASPHALT SHEET WITH SBS GRANULATED FINISH

7. *COLOCAR PLACA DE AISLAMIENTO RIGIDO*
   PLACE RIGID INSULATION BOARD

8. *COLOCAR CAPA SEPARADORA ANTIPUNZANTE DE FIBRA SINTETICA*
   PLACE PUNCH-RESISTANT SEPARATION LAYER OF SYNTHETIC FIBER

9. *COLOCAR GRAVA SUELTA*
   PLACE LOOSE GRAVEL

10. *REEMPLAZAR ALBARDILLAS DAÑADAS. (Ver plano normalizado de OICC no. 312)*
    REPLACE DAMAGE COPING (See OICC standard dwg. no. 312)

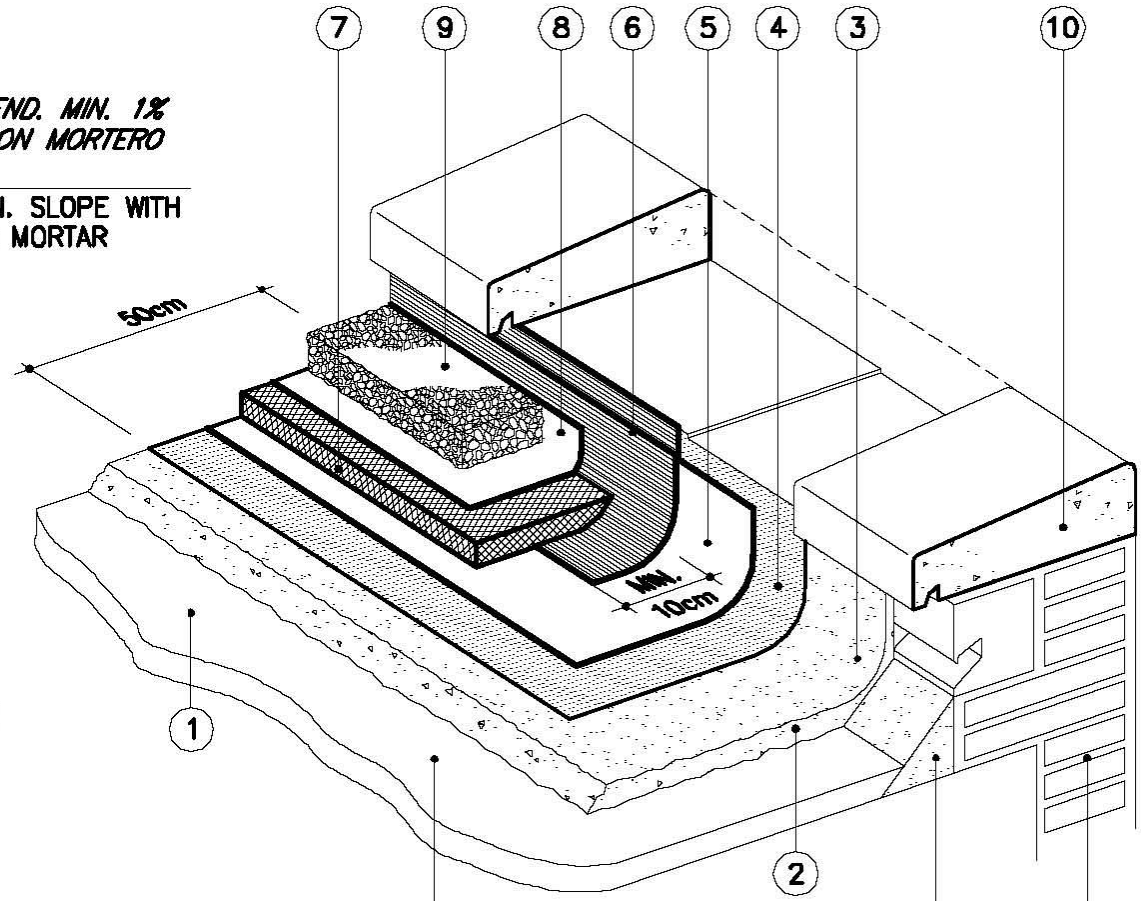

CHAFLAN DE CEMENTO EXISTENTE
EXISTING CEMENT CANT

CUBIERTA EXISTENTE
EXISTING ROOF

PETO EXISTENTE
EXISTING PARAPET WALL

INSTALACION DE CUBIERTA INVERTIDA
INVERTED ROOFING INSTALLATION

DEPARTMENT OF THE NAVY — NAVAL FACILITIES ENGINEERING COMMAND

NAVAL STATION ROTA, SPAIN

PLATE No. 13

1. *CUBIERTA EXISTENTE – LIMPIAR Y REMOVER TODA LA GRAVA SUELTA*
   EXISTING ROOF – CLEAN AND REMOVE ALL LOOSE GRAVEL

2. *REEMPLAZAR ALBARDILLAS DAÑADAS VER PLANO NORMALIZADO DE OICC No.308*
   REPLACE DAMAGED COPING – SEE OICC STANDARD DWG. No. 308

3. *FORMAR PENDIENTE CON HORMIGON CELULAR – PEND. MIN. 1% CON JUNTAS @ 9.00m2*
   FORM SLOPE WITH CELULAR CONCRETE – 1.5% MIN. SLOPE WITH JOINTS @ 9.00 SQ.m

4. *MORTERO DE NIVELACION – ESPESOR MIN. 1.5cm*
   LEVELLING MORTAR – MINIMUM THICKNESS 1.5cm

5. *IMPRIMAR CON ASFALTO*
   PRIME WITH ASPHALT

6. *IMPERMEABILIZAR CON LAMINA ASFALTICA*
   WATEERPROOF WITH ASPHALT SHEET

7. *REMATAR CON LAMINA ASFALTICA AUTOPROTEGIDA CON SBS GRANULADO*
   PLACE WITH SELF-PROTECTED ASPHALT SHEET **SBS GRANULATED**

8. *VOLVER LAMINA ASFALTICA SOBRE PETO EXISTENTE MINM. 2cm*
   TURN DOWN ASPHALT SHEET ON EXIST. PARAPET MIN. 2cm.

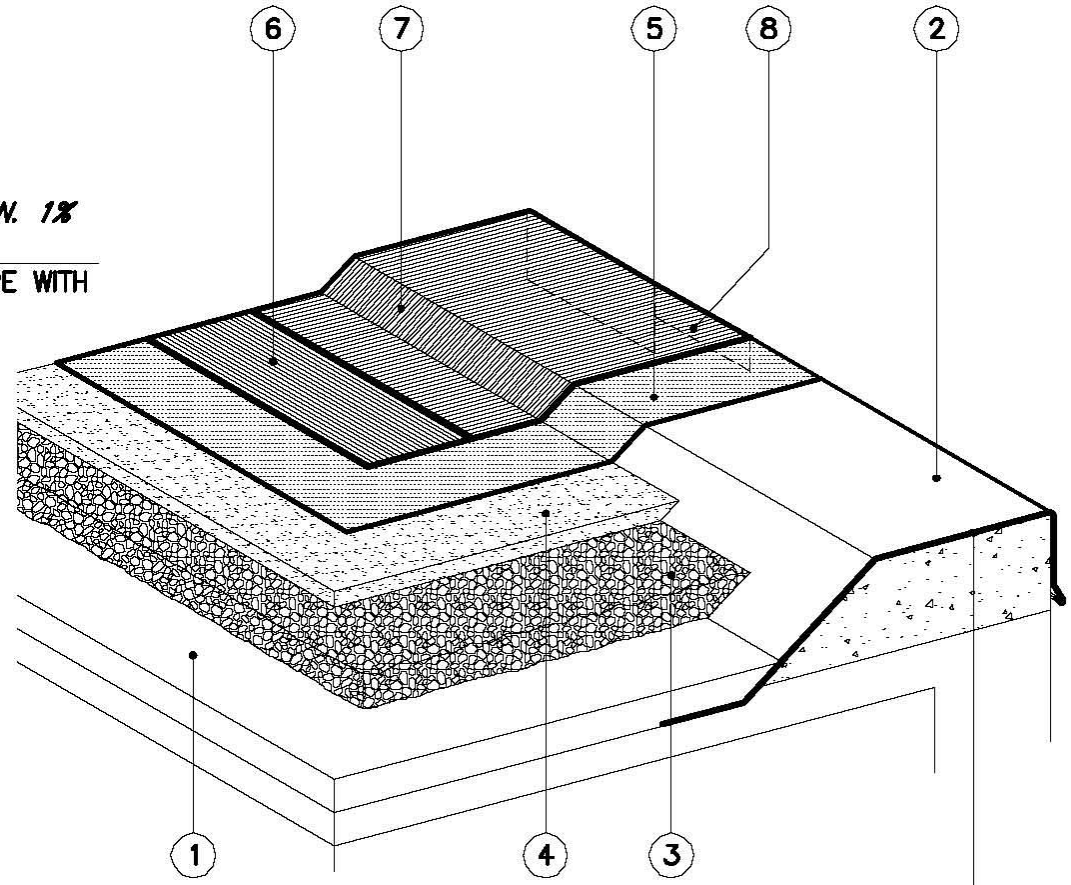

GUARDA AGUAS METALICO EXISTENTE
EXISTING METALICO EXISTENTE

SUBSTITUCION DE CUBIERTA ASFALTICA MULTICAPA POR CUBIERTA EN *SBS GRANUL.*
REPLACEMENT OF BITUMINOUS BUILT-UP ROOFING BY SBS GRANULATE **SHEET FINISHED**

ESTE DETALE ES APLICABLE A OTROS TIPOS DE CUBIERTA
THIS DETAIL APPLIES ALSO TO OTHER TYPES OF ROOFING

DEPARTMENT OF THE NAVY — NAVAL FACILITIES ENGINEERING COMMAND

NAVAL STATION ROTA, SPAIN

PLATE No. 12

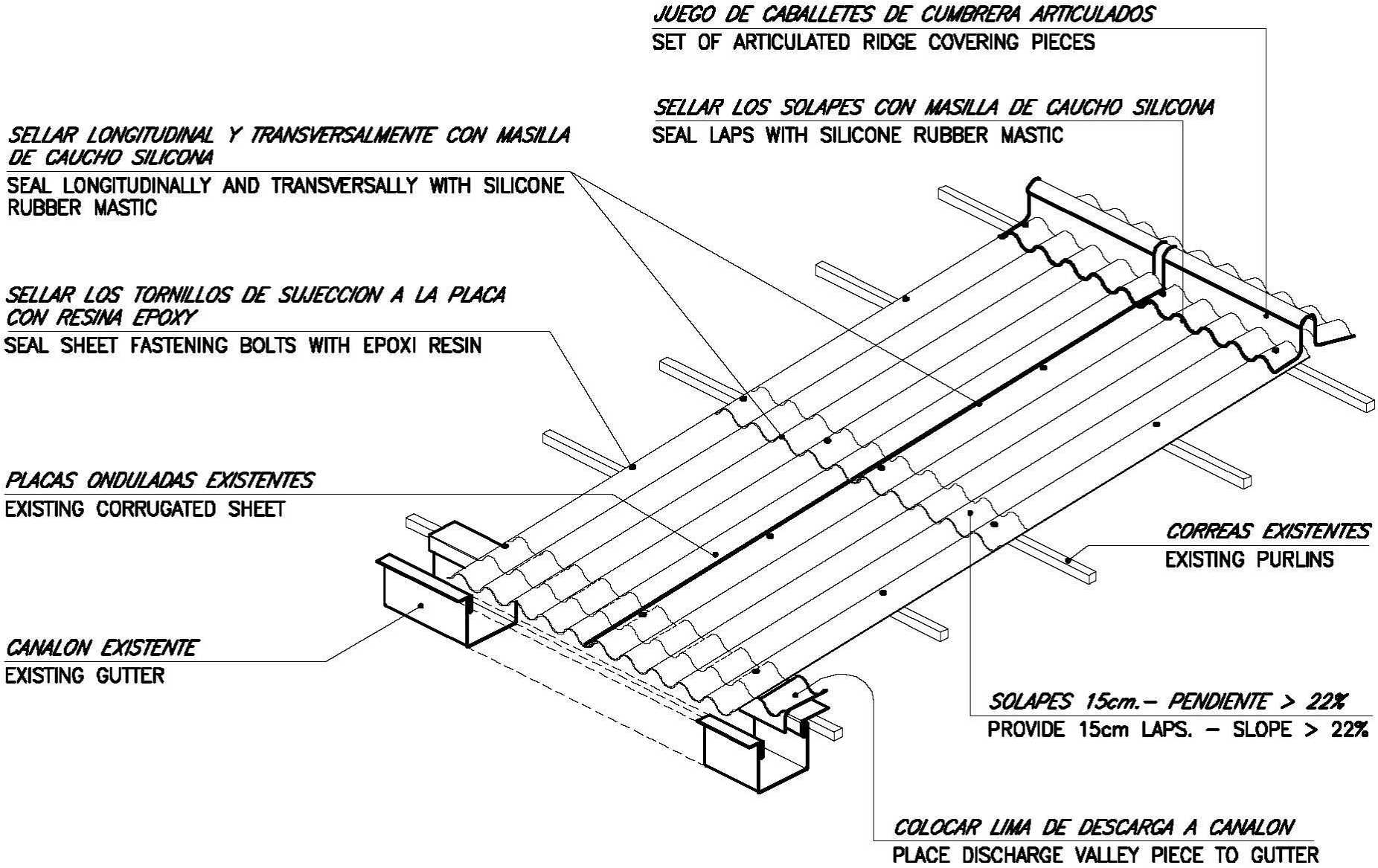

SELLADO DE CUBIERTA DE PLACAS ONDULADAS
CORRUGATED SHEET ROOFING SEALED

DEPARTMENT OF THE NAVY — NAVAL FACILITIES ENGINEERING COMMAND

NAVAL STATION ROTA, SPAIN

PLATE No. 11

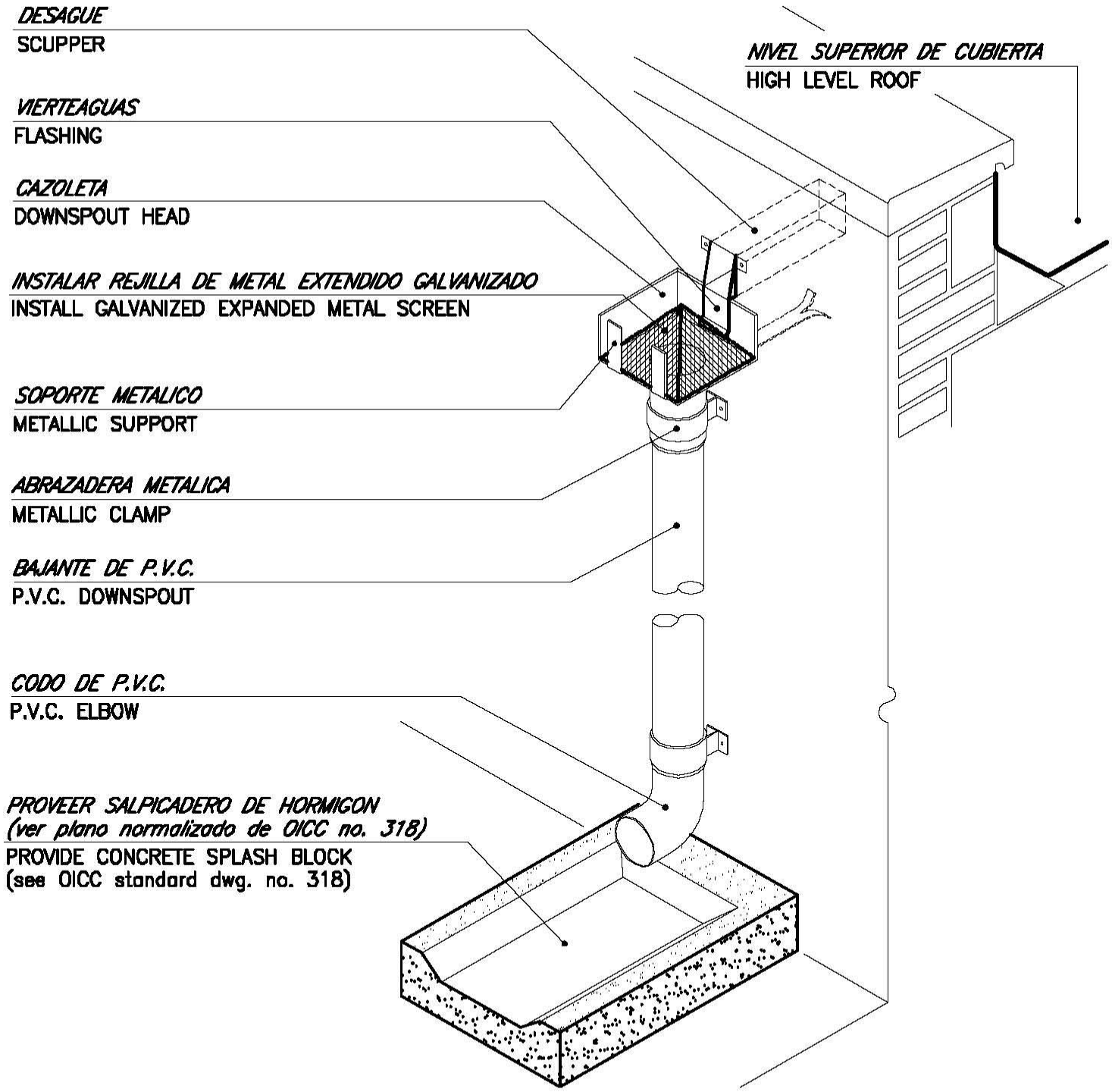

INSTALACION DE REJILLAS EN CAZOLETAS Y SALPICADEROS A PIE DE BAJANTES

INSTALLATION OF SCREENS IN DOWNSPOUT HEADS AND SPLASH BLOCKS AT TOE OF DOWNSPOUT

ESTE DETALLE ES APLICABLE TAMBIEN A OTROS TIPOS DE CUBIERTA

THIS DETAIL APLIES ALSO TO OTHER TYPES OF ROOFING

DEPARTMENT OF THE NAVY — NAVAL FACILITIES ENGINEERING COMMAND

NAVAL STATION ROTA, SPAIN

PLATE No. 10

1. *JUNTA DE DILATACION ESTANCA CON RELLENO DE ESPUMA DE POLIURETANO COMPRESIBLE*
   WATERTIGHT EXPANSION JOINT WITH COMPRESSIBLE *POLYETHYLENE FOAM FILLER*

2. *ENFOSCADO DE MORTERO A AMBOS LADOS DE LA JUNTA*
   MORTAR GROUND ON BOTH SIDES OF JOINT

3. *FORMAR PENDIENTE CON HORMIGON CELULAR*
   FORME SLOPE WITH CELLULAR SLOPE

4. *MORTERO DE NIVELACION FRATASADO. DOSIFICACION 1:6*
   FLOATED LEVELING MORTAR. MIX PROPORTION 1:6

5. *IMPRIMAR CON ASFALTO*
   PRIME WITH ASPHALT

6. *REFORZAR CON LAMINA ASFALTICA POLIMERICA*
   REINFORCE WITH POLYMERIC ASPHALT SHEET

7. *IMPERMEABILIZAR CON TELA ASFALTICA ACABADA EN SBS GRANULADA*
   WATERPROOF WITH ASPHALT SHEET SBS GRANULATED FINISHED

8. *SELLAR JUNTA CON MASILLA*
   SEAL JOINT WITH MASTIC

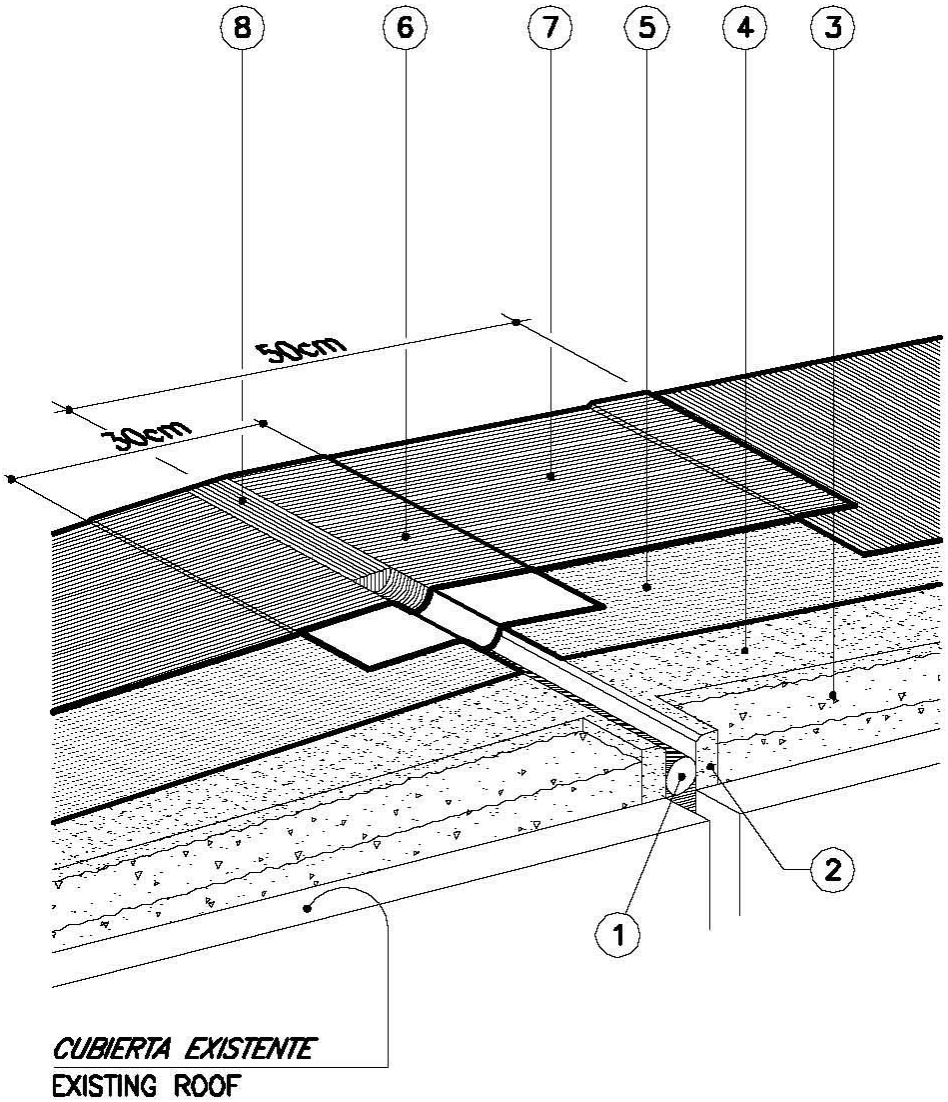

JUNTA DE DILATACION EN CUBIERTA DE SBS GRANULADA
EXPANSION JOINT IN SBS GRANULATED SHEET ROOFING

ESTE DETALLE APLICA TAMBIEN A OTROS TIPOS DE CUBIERTA
THIS DETAIL APPLIES ALSO TO OTHER TYPES OF ROOFING

DEPARTMENT OF THE NAVY — NAVAL FACILITIES ENGINEERING COMMAND

NAVAL STATION ROTA, SPAIN

PLATE No. 9

1. *LIMPIAR Y QUITAR TODA LA GRAVA SUELTA*
   CLEAN AND REMOVE ALL LOOSE GRAVEL

2. *FORMAR PENDIENTES CON HORMIGON CELULAR – PEND. MIN. 1.5% CON JUNTAS @ 9.00m2 Y ACABADO CON 1.5cm CON MORTERO DE REGULARIZACION.*
   FORM SLOPE WITH CELULAR CONCRETE – 1.5% MIN. SLOPE WITH JOINTS @ 9.00 SQ.m FINISH WITH 1.5cm LEVELLING MORTAR

3. *IMPRIMAR CON ASFALTO*
   PRIME WITH ASPHALT

4. *ENFOSCAR PERIMETRALMENTE EL PETO Y FORMAR MEDIA CAÑA CON MORTERO DE CEMENTO*
   PERIMETRAL PLASTER THE PARAPET WALL AND FORM HALF–ROUND WITH CEMENT MORTAR

5. *IMPERMEABILIZAR CON TELA ASFALTICA*
   WATERPROOF WITH ASPHALT SHEET

6. *REMATAR CON CAPA DE TELA ASFALTICA ACABADA EN SBS GRANULADO*
   PLACE TOP LAYER OF ASPHALT SHEET SBS GRANULATED FINISH

7. *REEMPLAZAR ALBARDILLAS DAÑADAS. (Ver plano normalizado de OICC no. 312)*
   REPLACE DAMAGE COPING (See OICC standard dwg. no. 312)

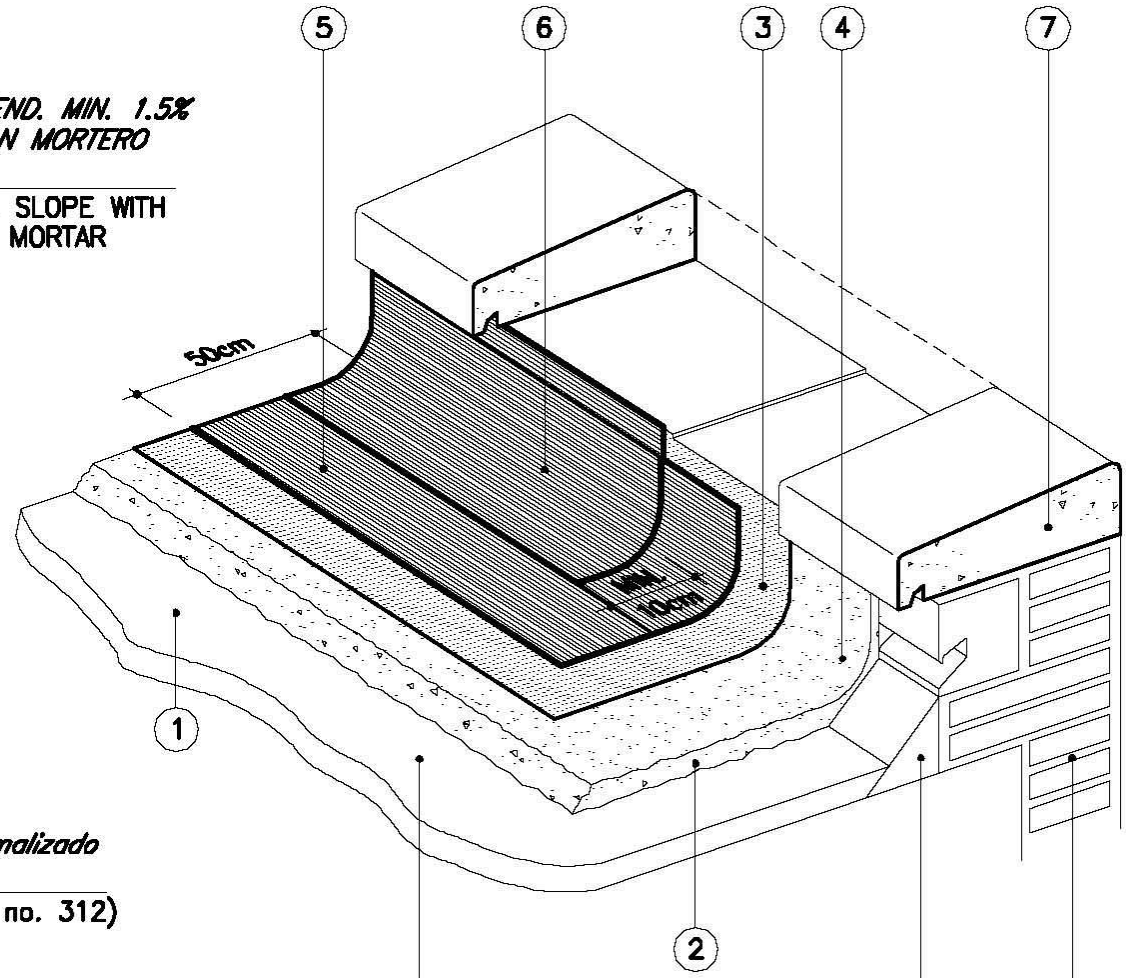

CHAFLAN DE CEMENTO EXISTENTE
EXISTING CEMENT CANT

CUBIERTA EXISTENTE
EXISTING ROOF

PETO EXISTENTE
EXISTING PARAPET WALL

INSTALACION DE CUBIERTA DE SBS GRANULADO – DETALLE DE PETO
INSTALATION OF SBS GRANULATED SHEET FINISH ROOFING – PARAPET WALL DETAIL

ESTE DETALLE TAMBIEN ES APLICABLE A OTROS TIPOS DE CUBIERTA
THIS DETAIL APPLIES ALSO TO OTHER TYPES OF ROOFING

DEPARTMENT OF THE NAVY — NAVAL FACILITIES ENGINEERING COMMAND

NAVAL STATION ROTA, SPAIN

PLATE No. 8

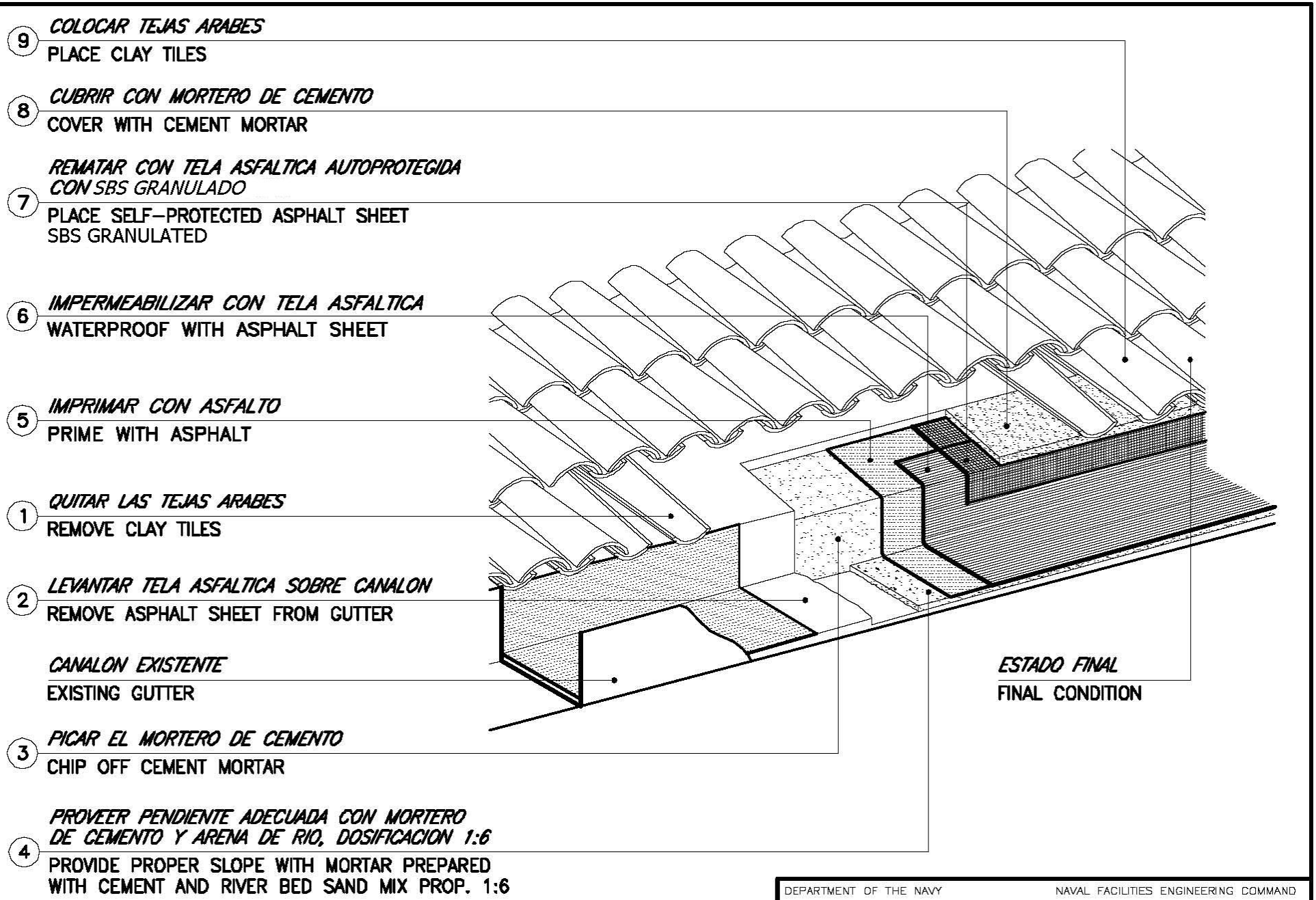

ENCUENTRO DE CUBIERTA DE TEJA ARABE CON CANALON
JUNCTION OF CLAY TILE ROOFING WITH GUTTER

DEPARTMENT OF THE NAVY — NAVAL FACILITIES ENGINEERING COMMAND

NAVAL STATION ROTA, SPAIN

PLATE No. 7

1. *QUITAR LAS TEJAS NECESARIAS (PRIMERA FILA)*
   REMOVE CLAY TILES AS REQUIRED (FIRST ROW)

2. *SENTAR LAS TEJAS CANALES CON MORTERO DE CEMENTO*
   SET CLAY TILES ON CEMEMT MORTAR

3. *HACER MURETE DE LADRILLO A PANDERETE CON MORTERO DE CEMENTO*
   SET A CONTINUOUS ROW OF HOLLOW TILES WITH CEMENT MORTAR

4. *TENDER MORTERO DE CEMENTO CON ARISTAS REDONDEADAS Y FORMANDO MEDIA CANA.*
   SET CEMENT MORTAR WITH ROUND ARRISES AND FORMING HALF–ROUND.

5. *IMPRIMAR CON ASFALTO Y COLOCAR DOS LAMINAS ASFALTICAS LA ULTIMA ACABADA EN SBS GRANULADO*
   PRIME W/ ASPHALT AND APPLY TWO ASPHALT SHEET LAYERS TOP ONE WITH SBS GRANULATED FINISHED.

6. *ABRIR ROZA*
   CUT GROVE

7. *COLOCAR VIERTEAGUAS DE CHAPA GALVANIZADA CON MORTERO DE CEMENTO EMPOTRADO EN ROZA*
   SET GALVANIZED SHEET METAL FLASHING INTO THE GROOVE WITH CEMENT MORTAR.

8. *CERRAR LA ROZA CON MORTERO DE CEMENTO*
   CLOSE GROVE WITH CEMENT MORTAR

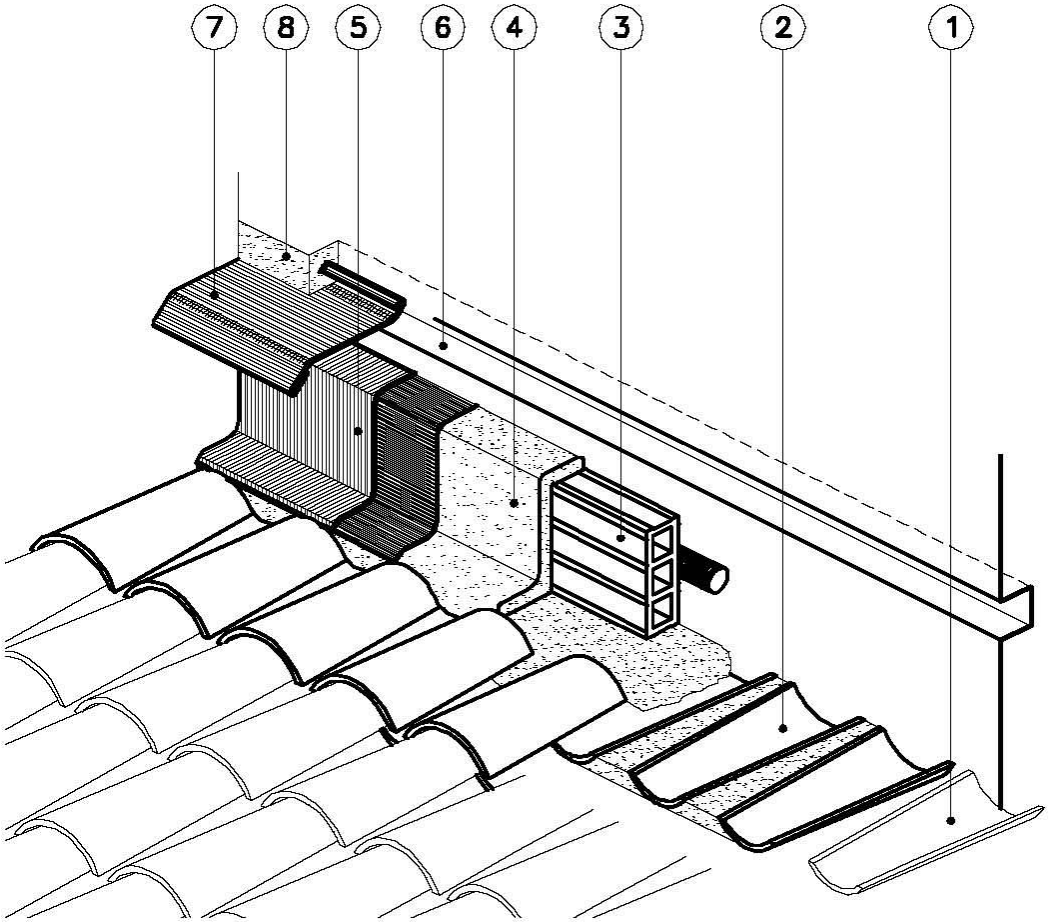

ENCUENTRO DE CUBIERTA DE TEJA ARABE CON PARAMENTO VERTICAL EN JUNTA DE DILATACION

JUNCTION OF CLAY ARABIC TILE ROOFING WITH VERTICAL SURFACES IN EXPANSION JOINT

ESTE DETALLE ES APLICABLE TAMBIEN A CUALQUIER TIPO DE ENCUENTRO ENTRE CUBIERTA Y MURO CON JUNTA DE DILATACION

THIS DETAIL ALSO APPLIES TO ANY TYPE OF MEETING BETWEEN ROOF AND VERTICAL SURFACE WITH EXPANSION JOINT.

DEPARTMENT OF THE NAVY — NAVAL FACILITIES ENGINEERING COMMAND

NAVAL STATION ROTA, SPAIN

PLATE No. 6

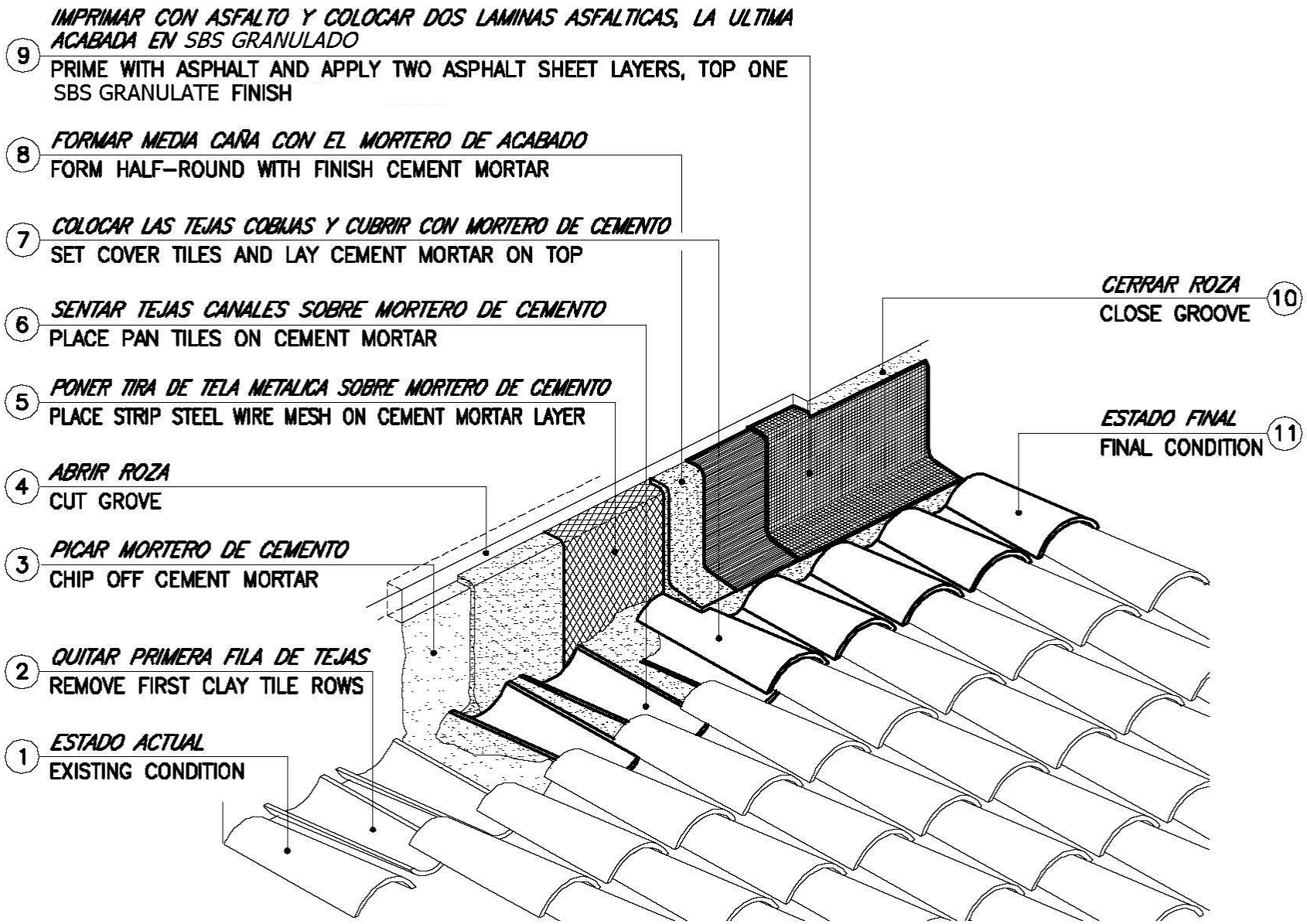

ENCUENTRO DE CUBIERTA DE TEJA ARABE CON PARAMENTO VERTICAL
JUNCTION OF CLAY TILE ROOFING WITH VERTICAL SURFACES

ESTE DETALLE ES APLICABLE TAMBIEN A CUALQUIER TIPO DE ENCUENTRO ENTRE CUBIERTA Y MURO SIN JUNTA DE DILATACION

THIS DETAIL ALSO APPLIES TO ANY TYPE OF MEETING BETWEEN ROOF AND VERTICAL SURFACES WITHOUT EXPANSION JOINT

DEPARTMENT OF THE NAVY — NAVAL FACILITIES ENGINEERING COMMAND

NAVAL STATION ROTA, SPAIN

PLATE No. 5

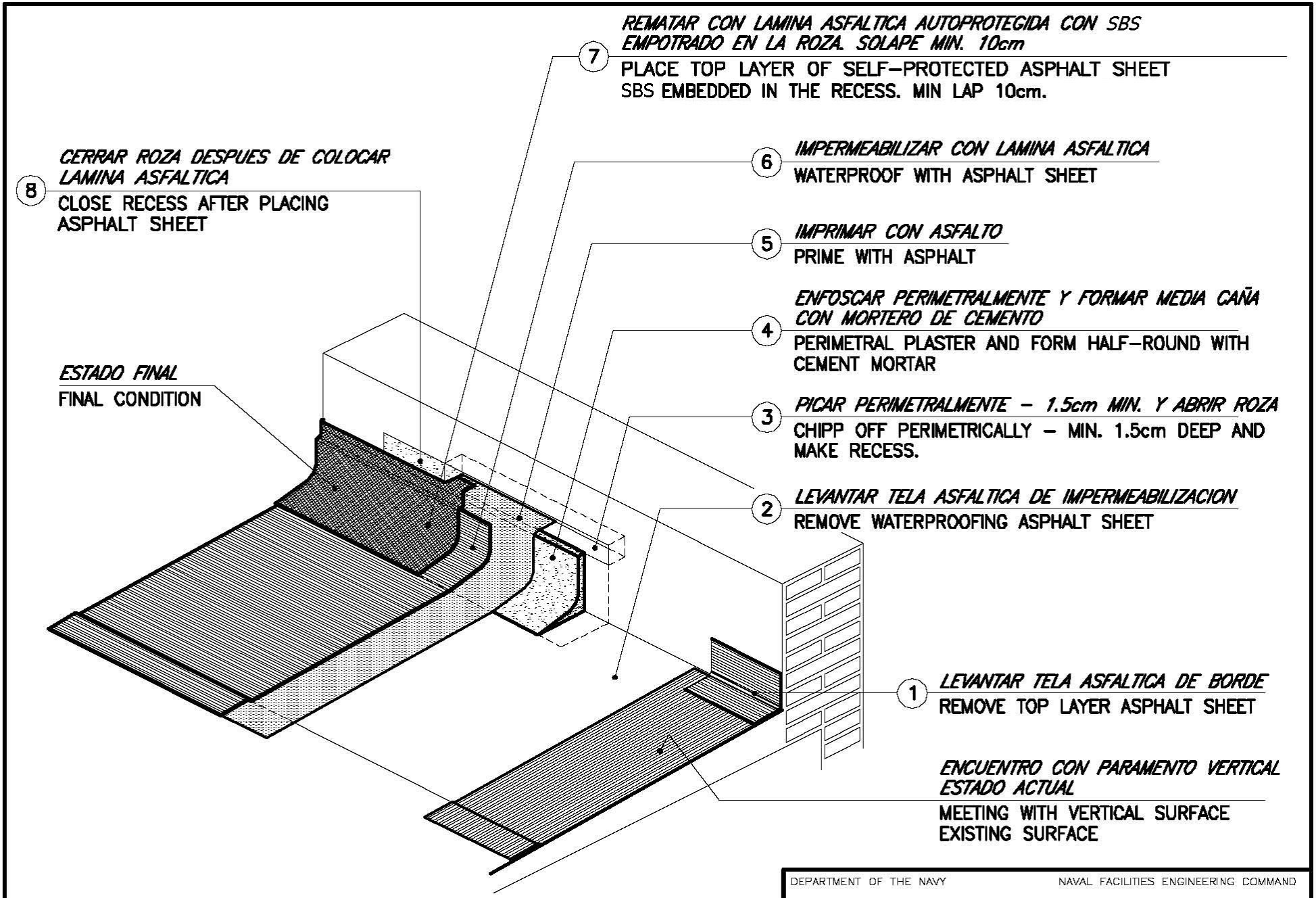

ENCUENTRO DE CUBIERTA EN SBS CON PARAMENTO VERTICAL

JUNCTION OF SBS ROOFING WITH VERTICAL SURFACES

DEPARTMENT OF THE NAVY — NAVAL FACILITIES ENGINEERING COMMAND

NAVAL STATION ROTA, SPAIN

PLATE No. 4

"A" *ENCUENTRO LONGITUDINAL DE PLACA CON PARAMENTO VERTICAL*
LONGITUDINAL MEETING WITH VERTICAL SURFACES

"B" *COLOCACION DE LIMA DE CIERRE*
PLACEMENT OF CLOSURE HIP SHAPE

ESTADO FINAL
EXISTING CONDITION

4 *CERRAR ROZA DESPUES DE COLOCAR BABERO*
CLOSE RECESS AFTER PLACING FLASHING

COLOCAR BABERO DE LAMINA ASFALTICA ACABADA EN SBS GRANULADO ADHERIDO A LA PLACA ONDULADA
3 PLACE FLASHING OF ASPHALT SHEET WITH SBS GRANULATE FINISH BONDED TO CORRUGATED SHEET.

2 *IMPRIMAR CON ASFALTO*
PRIME WITH ASPHALT

1 *ABRIR ROZA*
MAKE RECESS

ESTADO ACTUAL
FINAL CONDITION

SOLAPE 25cm – PEND.<22%
25cm LAP – SLOPE <22%

5 *SELLAR LOS TORNILLOS DE SUJECION DE LA PLACA CON RESINA EPOXI*
SEAL SHEET FASTENING BOLTS WITH EPOXY RESIN

6 *SELLAR LONGITUDINALMENTE CON MASILLA DE CAUCHO SILICONA*
SEAL LONGITUDINALLY WITH SILICONE RUBBER MASTIC

4 *SELLAR SOLAPES CON MASILLA DE CAUCHO SILICONA*
SEAL LAPS W/ SILICONE RUBBER MASTIC

3 *CERRAR ROZA DESPUES DE COLOCAR LIMA DE CIERRE*
CLOSE RECESS AFTER PLACING CLOSURE HIP SHAPE

1 *ABRIR ROZA*
MAKE RECESS

ESTADO ACTUAL
EXISTING CONDITION

2 *COLOCAR LIMA DE CIERRE EMPOTRADA EN LA ROZA*
PLACE CLOSURE HIP PIECE EMBEDDED IN THE RECESS

REPARACION EN CUBIERTAS DE PLACAS ONDULADAS
REPAIR OF CORRUGATED SHEET ROOFING

DEPARTMENT OF THE NAVY — NAVAL FACILITIES ENGINEERING COMMAND

NAVAL STATION ROTA, SPAIN

PLATE No. 3

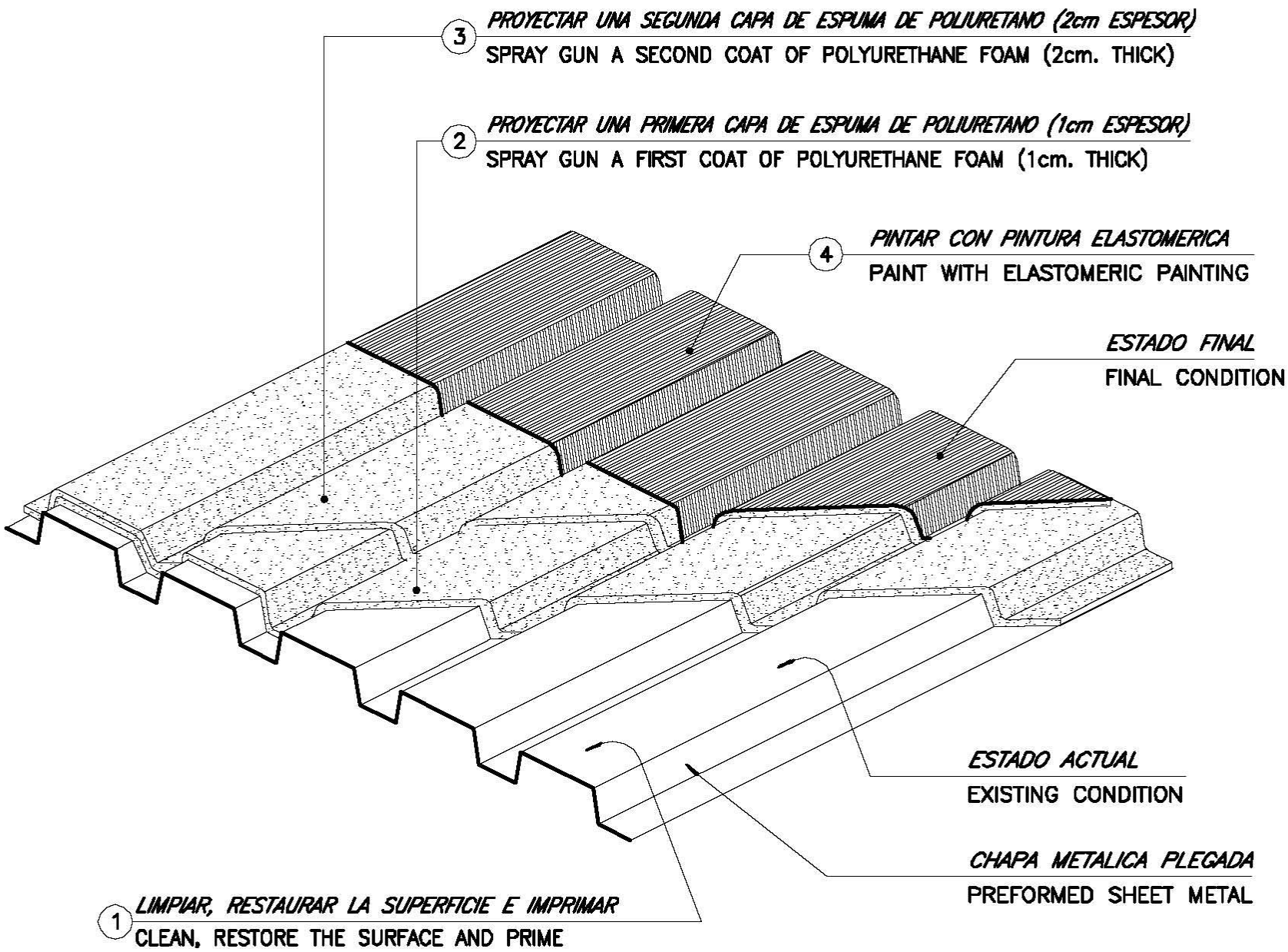

RECUBRIMIENTO DE CHAPA METALICA PLEGADA CON ESPUMA DE POLIURETANO

SPRAYED POLYURETHANE FOAM ON PREFORMED SHEET METAL ROOFING

DEPARTMENT OF THE NAVY — NAVAL FACILITIES ENGINEERING COMMAND

NAVAL STATION ROTA, SPAIN

PLATE No. 2

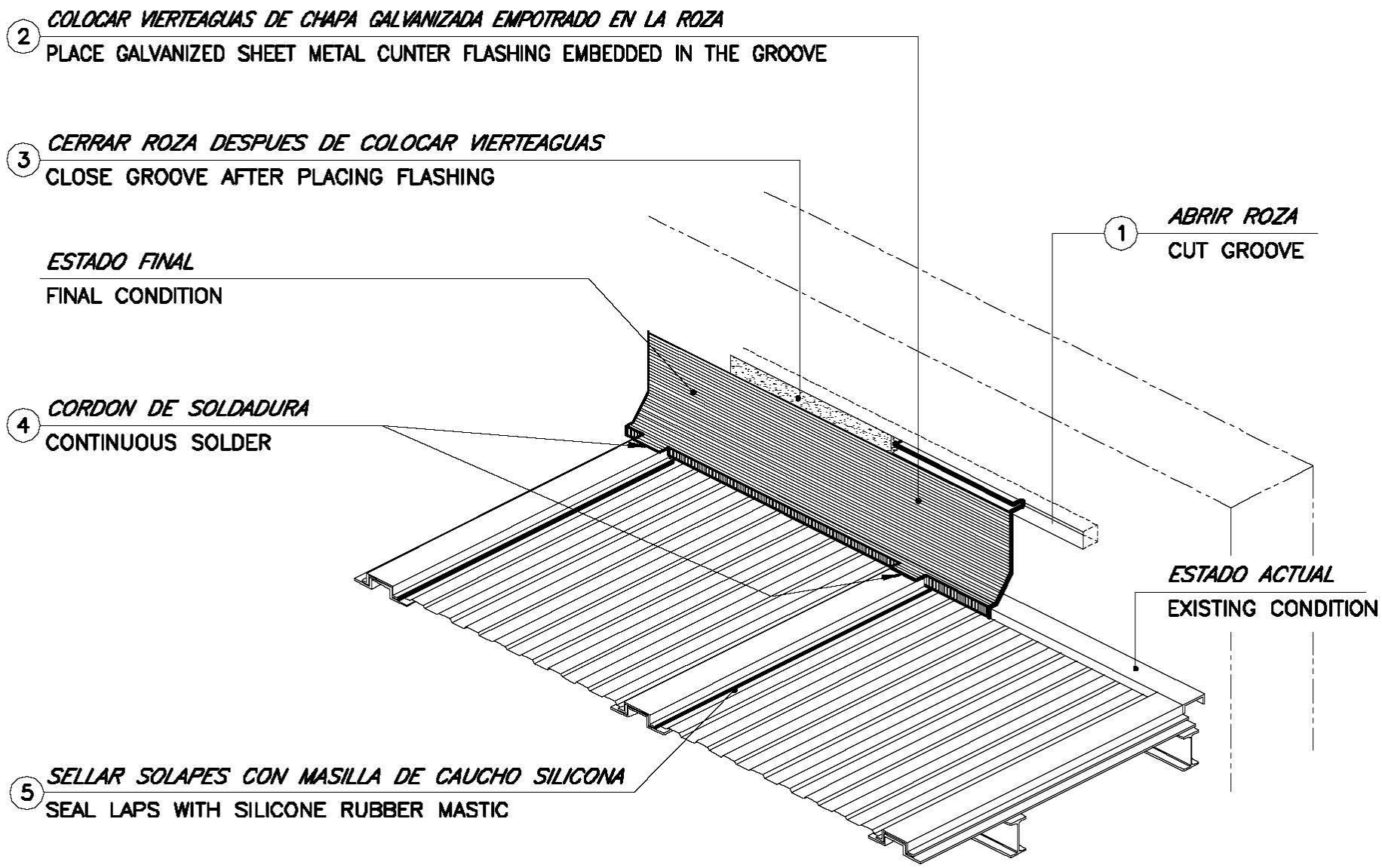

ENCUENTRO DE CUBIERTA DE CHAPA PLEGADA CON PARAMENTO VERTICAL
JUNCTION OF PREFORMED SHEET METAL ROOFING WITH VERTICAL SURFACES

DEPARTMENT OF THE NAVY — NAVAL FACILITIES ENGINEERING COMMAND

NAVAL STATION ROTA, SPAIN

PLATE No. 1