Dima Primary School Improvements

Mkinga District, Tanga Region, Tanzania
TZ-HA-2014-22524
FY14/15

Revised 4 January 2016

TECHNICAL REQUIREMENTS

Contents

1. PROJECT DESCRIPTION 6
1.1 GENERAL 6
1.2 SCOPE OF PROJECT 7
2. PROJECT OBJECTIVES 9
2.1 MISSION STATEMENT 9
2.2 FACILITY FUNCTION 9
2.3 PROJECT SPECIFIC PRIORITIES 9
2.4 APPROPRIATE DESIGN 10
2.5 WORKFLOW PROCESS 10
3. EXISTING SITE CONDITIONS 10
3.1 NATURAL CONSTRAINTS 10
3.2 MAN-MADE CONSTRAINTS 11
3.3 SITE DEVELOPMENT REQUIREMENTS 11
4. BUILDING REQUIREMENTS 12
4.1 ROOM REQUIREMENTS 12
4.2 EXTERIOR CHARACTER 12
4.3 DRY VENTILATED IMPROVED PIT (VIP) LATRINES 12
5. ROOM REQUIREMENTS 13
5.1 LATRINES 13
5.2 CLASSROOM RENOVATIONS 14
6. GENERAL WORK REQUIREMENTS 16
6.1 REFERENCE STANDARDS 16
6.2 WORK REQUIREMENTS 16
6.3 DESIGN GUIDANCE 17
6.4 PERFORMANCE TECHNICAL SPECIFICATIONS 17
6.5 SUBMITTALS 17
6.6 CONSTRUCTION GUIDANCE 20
6.7 CERTIFICATIONS, LICENSES, PERMITS, FEES, ETC. 20
6.8 COORDINATION 20
6.9 VEGETATION CONTROL 20
6.10 RESPONSIBILITY OF MATERIALS 21
6.11 SAFETY AND INSPECTION 21
6.12 SPILL CONTAINMENT PLAN 22
6.13 SPECIAL SITE CONDITIONS 22
6.14 CLEANING 22
7. ENGINEERING SYSTEMS REQUIREMENTS 23

A10 FOUNDATIONS 23
A1010. Standard Foundations 23
A1030. Slab On Grade 23
B10 SUPERSTRUCTURE 23
B1010. Floor Construction 24
B1020. Roof Construction 24
B1030. Wall Construction 24
B20 EXTERIOR ENCLOSURE 24
B2010. Exterior Walls 24
B2020. Exterior Windows 24
B2030. Exterior Doors 25
B30 ROOFING 25
B3010. Roof Coverings 25
C10 INTERIOR CONSTRUCTION 25
C1010. Partitions 25
C1030. Specialties 26
C1040. Interior Doors 26
C20 STAIRS 26
C2010. Stair Construction 26
C30 INTERIOR FINISHES 26
C3010. Wall Finishes 26
C3020. Floor Finishes 27
C3030. Ceiling Finishes 27
C3040. Interior Coatings And Special Finishes 27
D50 ELECTRICAL 27
D5010. Electrical Service And Distribution 27
D5020. Lighting And Branch Wiring 27
D5030. Communications And Security 28
D5040. Other Electrical Services 28
G10 SITE PREPARATION 28
G1010. Site Clearing 29
G1020. Site Earthwork 29
G1030 1.5. Disposal 29
G20 SITE IMPROVEMENTS 29
G2040. Site Development 29
8. PERFORMANCE TECHNICAL SPECIFICATION 29
SECTION A10: FOUNDATIONS [6/07] 30
A10 General 30
A1010 Standard Foundations 32

A1020 Slab On Grade 32
A1030 Elevated Floor Slabs 33
A1040 Concrete 33
SECTION B10: SUPERSTRUCTURE [06/07] 36
B10 General 36
B1010 Construction Components 36
B1020 Wood 37
B1030 Unit Masonry 37
B1050 Steel 39
SECTION B20: EXTERIOR ENCLOSURE [04/07] 41
B20 General 41
B2010 Exterior Walls 41
B2020 Exterior Windows 42
B2030 Exterior Doors 43
SECTION B30: ROOFING [04/07] 44
B30 General 44
B3010 Steep Slope Roof Systems 44
B3020 Low Slope Roof Systems 45
B3030 Flashings & Trim 46
SECTION C10: INTERIOR CONSTRUCTION [06/07] 46
C10 General 46
C1010 Partitions 46
C1040 Interior Doors 47
SECTION C20: STAIRS [8/06] 48
C20 General 49
C2010 Stair Construction 49
SECTION C30: INTERIOR FINISHES [04/07] 49
C30 General 49
C3010 Wall Finishes 49
C3020 Floor Finishes 50
C3030 Ceiling Finishes 51
C3040 Interior Painting And Special Finishes 52
SECTION D50: ELECTRICAL [08/06] 55
D50 General 55
D5010 Electrical Service And Distribution 57
D5020 Lighting And Branch Wiring 58
D5040 Other Electrical Services 58
SECTION F10: Special Construction [08/06] 58
F1010 Pre-Engineered Buildings 58

SECTION G10: SITE PREPARATION 60
G10 General 60
G1010 Site Clearing 61
G1020 Site Demolition & Relocations 62
G1030 Site Earthwork 63
G1040 Hazardous Waste Remediation 64
SECTION G30: SITE CIVIL/MECHANICAL UTILITIES [08/06] 65
G30 General 65
SECTION G40: SITE ELECTRICAL UTILITIES [06/07] 65
G40 General 65
G4010 Electrical Distribution 68
9. Photos 69
Site Sketch. 81

1. PROJECT DESCRIPTION

1.1 GENERAL

This is a design-build construction project to provide improvements to the Dima Primary School. The GPS coordinates are: -4.909722, 38.982222. The scope of work includes:

- Building 1, provide and install three (3) new doors to match existing and repair/refinish twenty four (24) existing windows including new wire screens. Patch and paint all interior walls. Color to match existing.
- Building 1, provide and install a water catchment system to include new gutters and one 20,000 liter tank.
- Building 1, finishing exposed masonry on the North and West exterior sides. Provide one coat of primer and two coats of paint. Color to match existing and be approved by headmaster.
- Building 1, add concrete stairs in two locations in accordance with site sketch. Minimum width is 0.7 meters, and maximum rise per stair is 0.3 meters. Patch concrete floors in all rooms and veranda.
- Building 1, remove and replace entire roof including trusses and sheathing. Remove and replace supports, as needed, to ensure they are level. Install and paint gypsum board ceiling.
- Building 2, provide and install one (1) new door to match existing and repair/refinish seven (7) existing windows including new wire screens. Patch and paint all interior and exterior walls. Color to match existing.
- Building 2, add concrete stairs in two locations in accordance with site sketch. Minimum width is 0.7 meters, and maximum rise per stair is 0.3 meters. Patch concrete floors in all rooms and veranda.
- Building 2, remove and replace entire roof including trusses and sheathing.
- Provide and install twelve (12) new dry-pit latrines, four (4) male and eight (8) female.

All designs, site selection, methods of construction, and approvals shall be coordinated, approved, and compliant with the Ministry of Education, Ministry of Public Works, Ministry of Health, via the NAVFAC EURAFSWA project manager or Contracting Officer's Representative.

School representatives are as follows:
Mr. Yohana Paul Rua, +255 718 262 576
Mr. Hussein Hamisi Joga, +255 718 865 294
Mr. Mrisho, Head teacher, +255 712 403 592

Design-Build Procedure

The Design-Build procurement method consists of a design phase and construction phase. The construction phase shall start only after acceptance of the contractor's design and all preconstruction submittals.

The **design shall be developed by qualified design professionals**, either consistently employed in the contractor's company or working for a design firm hired by the contractor for the purpose of this project.

Design Acceptance and Construction Authorization

The construction cannot start until all submittals required by this contract are received and reviewed by the US Government and shown to meet the requirements of these Technical Requirements and

the RFP package. The acceptance of the design and authorization to start construction will be issued by the NAVFAC EURAFSWA project manager or Contracting Officer's Representative (COR).

Bid Guidance

This project is separated into distinct portions of work, referred to as Contract Line Item Number (CLIN). The contactor shall provide prices for each CLIN in accordance with the following delineation. Some or all of the work may be included in the final award.

- CLIN 1: Provide and install 12 dry-pit latrines, 4 male, 8 female.
- CLIN 2: Provide and install a complete 20,000 liter water catchment system on Building 1, provide all interior and exterior renovations on Buildings 1 and 2 in accordance with this PTS.
- CLIN 3: Remove and replace the entire roof structure on Buildings 1 and 2 in accordance with this PTS.

1.2 SCOPE OF PROJECT

Furnish all necessary design, labor materials and supervision to provide complete and usable classroom facilities including, but not limited to: Foundations, Superstructure, Exterior Enclosure, Roof System, Interior Construction, Plumbing Systems, Site Improvements and Other Work as required.

The work will include the following:

Demolition

Demolish, remove, and dispose of existing roof structures on Buildings 1 and 2.

Renovation

Building 1: Renovate 3 doors and 24 windows, as noted. Patch holes in interior concrete floor and veranda, which may require sawing concrete floor and installing 75-100mm thick concrete, rather than just a thin concrete screed. Add veranda steps. Patch and paint interior walls. Patch and paint exterior wall.

Building 2: Renovate 1 door and 7 windows, as noted. Patch holes in interior concrete floor and veranda. Add veranda steps. Patch and paint interior walls.

Construction

Provide and install new doors, door ventilations, and windows where they currently do not exist. Contractor to field verify door, door ventilation, and window dimensions prior to construction. Exterior doors shall open outward and have high quality, heavy duty handles and latches shall be provided to facilitate opening and closing. All doors shall be fabricated with an approved durable material suitable for heavy use in a school environment and shall have independently keyed, locking hardware. Doors and windows shall have all necessary hardware (locking mechanism, bolt, lock or latch) required to allow for locking to provide security to the building while still allowing adequate means of egress in case of emergency, and shall be in accordance with the legal building standards in Tanzania.

Furnish and install a complete and usable water catchment system for the Building 1 roof, with one (1), 20,000L SIM storage tank. Tank shall be situated at suggested location with actual location to be confirmed in writing by local school leaders. Tank shall have a concrete slab foundation and necessary that meets the technical criteria outlined in this document. The water outlet shall be secured with a strut embedded in the foundation such that the outlet will not break under normal use.

Provide and install 12-stall ventilated improved pit latrines (4 male, 8 female) designed in accordance with the requirements of the Tanzania Ministry of Heatlh, Ministry of Education, the Ministry of Public Works, and this Performance Work Statement. Construction shall be steel reinforced concrete with CMU block walls and partitions. Roof shall be 22 gauge corrugated sheet metal. The dry pit latrine shall be construction in an area as noted on the sketch and to be confirmed in writing with local

school leaders. The site must be completely fenced and secured during construction. If pit excavation depth exceeds 4 feet (1.2 meters), an excavation plan shall be submitted to the COR and PM.

Remove and replace entire roof including trusses and sheathing on Building 1. Roof shall be insulated 20 gage metal deck. Remove and replace roof supports, as needed, to ensure they are level. Install and paint gypsum board (or equivalent) ceiling in all rooms in Building 1.

Sitework

Re-grading may be required for this site due to the slope. Latrine site must be approved in writing by the Contracting Officer's Representative (COR) prior to the start of construction.

Project Sign

Contractor shall provide a painted project sign. The sign shall be constructed of wood and be supported by wooden or metal posts. The paint shall be water resistant and display the following: Project name shall appear at the top center in 76mm (3 inch) tall capital block letters. Below the title the host nation and American flags. And below the flags in 38mm (1.5 inch) lettering in sentence case letters the text shown. Refer to example below.

DIMA SCHOOL IMPROVEMENTS

In cooperation with the Tanzanian Government, funding for this project is provided by the U.S. Government.

Dedication Sign

Provide a project dedication plaque at the project site at least 2 weeks prior to project completion. No later than 4 weeks prior to the planned project completion, the Contractor shall contact the Contracting Officer or Contracting Officer's Representative regarding final wording for the dedication plaque. The Contractor shall provide a proof of the plaque for approval prior to manufacturing the plaque. The approximate size of the plaque shall be approximately 400 mm x 500 mm. The plaque shall be constructed of sheet metal with a water resistant coating and affixed directly to the building at a location approved by the facility administrator and the Contracting Officer (or Contracting Officer's Representative) to provide optimal visibility. The plaque shall have a frame around it. The frame material shall be wood and be approved by the Contracting Officer prior to installation. Refer to example below.

KUFANYA KAZI KWA MANUFAA YA BAADAYE KWA WATU WA TANZANIA

MRADI ……. NI ZAWADI KUTOKA KWA WATU WA MAREKANI KWA WATU WA TANZANIA

AFYA NA USITAWI
DAY MONTH,YEAR

WORKING TOGETHER FOR THE FUTURE BENEFITS FOR THE PEOPLE OF TANZANIA

THESE SCHOOL IMPROVEMENTS ARE A GIFT FROM THE PEOPLE OF THE UNITED STATES TO THE PEOPLE OF TANZANIA

DAY MONTH, YEAR
HEALTH AND PROSPERITY

Project Duration
The design period is 90 days, which commences upon contract award. The construction period is 450 days. The full period of performance is 720 days after contract award.

2. PROJECT OBJECTIVES

2.1 MISSION STATEMENT
The purpose of the project is to provide school improvements and a new water catchment system to serve the school student and teachers and local inhabitants of the nearby village. The project will address the lack of suitable latrines based on the number of students at the school, effectively doubling the latrines on site. The project will provide increased school security with new doors and windows and renovated doors and windows.

2.2 FACILITY FUNCTION
The facility must be sufficient to provide a suitable environment for education, based on local codes and standards unless otherwise specified herein.

2.3 PROJECT SPECIFIC PRIORITIES
The following items are of primary importance to the user of the facility.

Sustainable Design
Integrate sustainable principles into the design, development and construction of the project. Reduce the total cost of ownership of the facility using a whole building, life-cycle approach. Provide integrated sustainable design strategies and features to minimize the energy consumption of the facilities; conserve resources; minimize adverse effects to the environment; and improve occupant productivity, health, and comfort. Recommended FRP construction method for the addition has

minimal maintenance requirement. No cracking or spalling possible in the walls, so the structure will resist the effects of the expansive soil.

Energy Conservation
Not applicable

2.4 APPROPRIATE DESIGN
The design is to maintain an indigenous character. As much as possible, materials are to be available locally to promote the local economy and to take advantage of the skills and experience of local trades-persons. Construction methods are to be in-line with those used locally to take advantage of the skills and experience of local trades-persons.

2.5 WORKFLOW PROCESS

Hours Of Operation
The work of this contract is to be done during the hours of 0800-1700 Monday – Friday. Minimize the effect of noise and dust from site work by performing site work during hours of the day and/or days of the week when students are not present. If needs arise to work other than normal hours, coordinate with the facility, and obtain approval from the US Government Contracting Officer Representative (COR).

Staffing/Occupancy
The classroom facility shall serve approximately **250** students, 150 of which are female.

Contract Milestones
The key contract milestones are summarized in the following table:

a	Concept Design	90 days after award
b	Pre-construction submittal completion	180 days after award
c	Notice to Proceed with Construction (NTPC)	Upon acceptance of all submittals
d	Construction	450 days from NTPC
e	Final Inspection	Within 2 months of work completion
f	Benficial Occupancy Date (BOD) Release	Work acceptance (after punch list)
g	Warranty	1 year from BOD date

3. EXISTING SITE CONDITIONS

3.1 NATURAL CONSTRAINTS
Consider all of the following natural constraints in the design of the facility and its location and orientation within the proposed site:

Topography:
Minimize the need for cut and fill operations.

Vegetation / Landscaping:
Protect existing vegetation.

Climatology (Solar orientation, etc.):
Design to take advantage of prevailing wind direction and solar orientation to naturally moderate the interior temperature of the latrines. There must be sufficient daylighting levels conducive to safe access and use.

Reference Geotechnical Soils Report if applicable.
Design foundations and structural components of the buildings in accordance with geotechnical soils report information and local code requirements. Provide geotechnical engineering services if no current report exists for the site, and site specific conditions and/or FRP manufacturer requires one.

Hydrographic Survey if applicable:
There is no requirement for a hydrographic survey at this site.

3.2 MAN-MADE CONSTRAINTS

Existing Vehicular Access and Circulation:
Indicate any existing vehicular access to the site.

Site Utilities:
Verify the location and capacity of all existing utilities on site prior to the start of construction activities.

Site Drainage & Storm Water Runoff (hydrology):
Verify that the facility can be constructed without negative impact from storm water runoff to the adjacent area of the site.

Existing Buildings:
There is an existing school building adjacent to the project site. Construction activities shall not adversely impact the structural integrity of the adjacent building.

Fencing:
There is no fencing or walls on this site.

Adjacent Land Use, Cultural Resources (historical, archeological):
Verify that the proposed facility is compatible with adjacent land and that there is no significant impact on existing cultural resources.

3.3 SITE DEVELOPMENT REQUIREMENTS

Site Plan – Facility Footprint
Provide a scaled drawing with dimensions showing the development of the site including location of the all new and existing structures. Concept drawings with dimensions showing the development of the site have been included in this performance work statement.

Parking and Service Access:
Indicate any proposed vehicular parking and service access areas.

Pedestrian Access and Circulation:
Indicate all proposed paths, sidewalks, steps, etc.

Recreational and Outdoor Activity Areas:
Not required.

Landscaping:
Not required.

Utilities:
Indicate the location of the connection to any community utility system planned or under development at the time of award in accordance with this document and local requirements.

Site Drainage & Storm Water Runoff:
Indicate all proposed drainage channels.

Site Clearing:
Indicate areas of site clearing as required to construct the project in accordance with this document and local requirements.

Construction Access / Lay down Area:
Indicate areas of material storage, construction vehicle parking and temporary security fencing.

Signage:
Indicate the location of the construction sign and any other signage required by local authorities.

4. BUILDING REQUIREMENTS

4.1 ROOM REQUIREMENTS
Refer to the sketch for additional information and to further define design intent. It is the responsibility of the Contractor to submit final construction documents based on site constraints and requirements of the Ministry of Education that may not be sufficiently defined below.

Space Name	# of spaces	Ideal Width (cm)	Ideal Width (cm)	Unit SQM (Net)	Total SQM (Net)	Ceiling Height (cm)	Special Features
Classroom Renovations	4	Various	Various	Various	210	280	Chalkboard each room
				Subtotal Net Area	210		
				TOTAL GROSS AREA	**210**		

4.2 EXTERIOR CHARACTER
Colors of doors and windows shall be selected by the Ministry of Education, via submittal.

4.3 DRY VENTILATED IMPROVED PIT (VIP) LATRINES
One 12-stall dry VIP latrine facility shall be built in proximity of school. Exact position is to be determined in order to guarantee proper ventilation and easy access. Special attention shall be provided to make sure the VIP facility is placed downwind of the school facilities, preferably where the soil has good drainage. The doorway of the VIP latrine shall face the prevailing winds. The latrine facilities shall be located at least 20 m away from any other surrounding construction. Separate male/female access to be implemented. Design life for the latrines shall be a minimum of 10 years

for 200 users per year. The minimum depth of latrine shall be 2 meters. The base shall be elevated above level ground by at least 100 millimeters. Floor shall be sloped towards the hole at a 5% grade to facilitate cleaning. The squat hole shall be no more than 250 millimeters in any direction. The ventilation pipe shall have a minimum interior diameter of 150 millimeters. The pipe shall be of PVC material. The pipe shall have a fly screen installed of a stainless steel material or equivalent corrosion-resistant material capable of withstanding extreme rainfall, sunlight, and high temperatures. The mesh aperture of the screen shall be no more than 1.2 millimeters by 1.5 millimeters. The location of the pipe shall be such that it is clear of tall trees or buildings and at least 0.5 meters above the highest point of the roof. In order to determine suitability of location of latrines, conduct a geotechnical survey to ensure soil characteristics are suitable and groundwater depth is suitable.

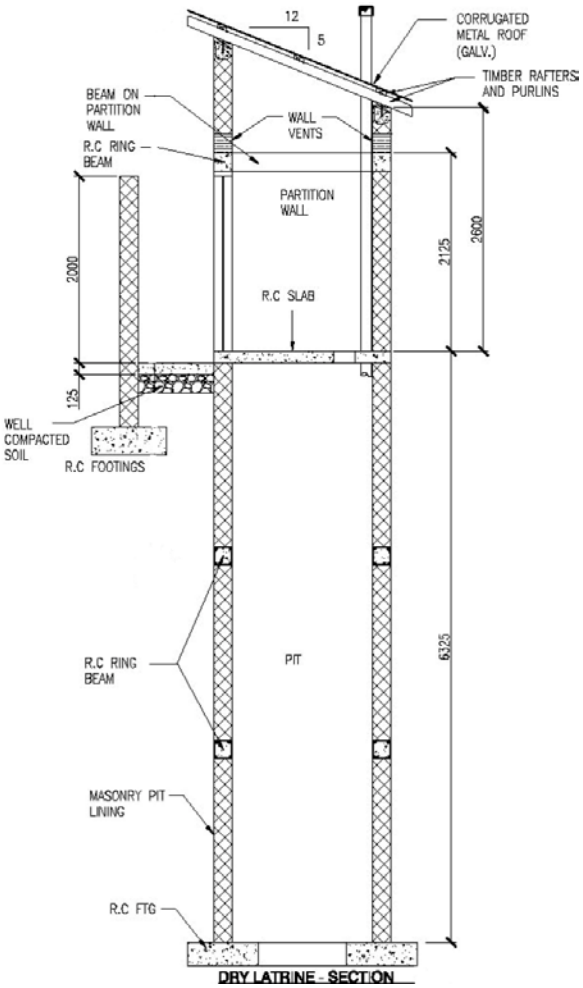

DRY LATRINE - SECTION

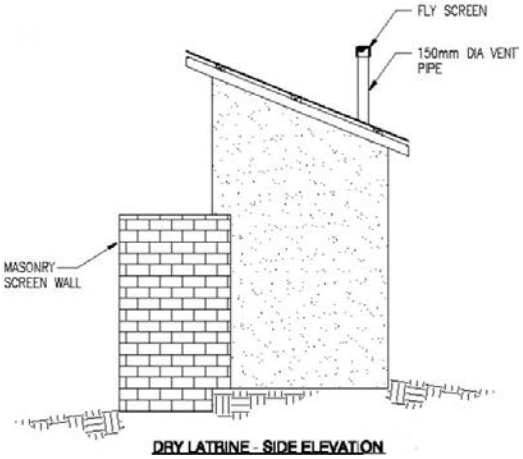

DRY LATRINE - SIDE ELEVATION

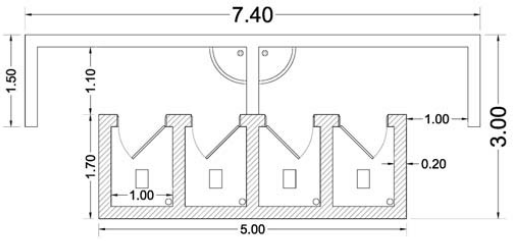

Dry VIP Latrine - FLOOR PLAN

5. ROOM REQUIREMENTS

5.1 LATRINES

Actual dimensions must conform to requirements of the Ministry of Health and the Ministry of Education. The concept drawings serve as a guide to further define design intent. It is the responsibility of the Contractor to submit final construction documents based on site constraints and requirements of the Ministry of Education, Ministry of Public Works, and Ministry of Health that may not be sufficiently defined below. The dimensions listed in the concept drawings should only serve as a guide, and the Contractor shall design according to all requirements as appropriate. Required depths of the dry pit latrines shall be the responsibility of the Contractor.

Function	Special Dimensions	Acoustics	Occupancy	Access	Other
Sanitation			12	4 M/8 F	
Uniformat Level 4	**Uniformat Title**	**Description**	**Qty**	**Size**	**Remarks**
B201001	Unit Masonry	Cement block			Exterior Walls
C101001	Unit Masonry	Partitions of Cement block			Partitions and Interior Walls
C103005	Interior Specialty Doors Systems	Toilet Stall Doors	12		With all hardware - Hinges, Locks, Latches, Knobs, Trim
C301001	Plaster Wall Finishes	Cement Plaster Wall Finish			Portland cement plaster wall finish
C302009	Hardeners and Sealers	Concrete Floor Finish			Pigmented concrete floor with 2 coats of hardener/sealer
C303002	Ceiling Finishes	Exposed Structure			Primer and 2 Finish Coats, colors to be selected by the Ministry of Education

C304004	Plaster Finishes	Wall and Ceiling Finish Coatings			Primer and 2 Finish Coats
D201001	Water Closets	Turkish style toilets	12		1 stall each

5.2 CLASSROOM RENOVATIONS

Building 1

Function	Special Dimensions	Acoustics	Occupancy	Access	Other
Education					
Uniformat Level 4	**Uniformat Title**	**Description**	**Qty**	**Size**	**Remarks**
B201001	Unit Masonry	Cement block			Exterior Walls
C101001	Unit Masonry	Partitions of Cement block			Partitions and Interior Walls
C301001	Plaster Wall Finishes	Cement Plaster Wall Finish			Portland cement plaster wall finish
C302009	Hardeners and Sealers	Concrete Floor Finish			Pigmented concrete floor with 2 coats of hardener/sealer
C303002	Ceiling Finishes	Exposed Structure			Primer and 2 Finish Coats, colors to be selected by the Ministry of Education
C304004	Plaster Finishes	Wall and Ceiling Finish Coatings			Primer and 2 Finish Coats
B201002	Exterior Louvers and Screens	Exterior Enclosure	24		Repair/replace window frames and louvers. Daylighting/air flow will confirm to MoE requirements.
B2030	Exterior Doors	Exterior Enclosure	3		With all hardware - hinges, locks, latches, knobs, trim, integral assembly
B1020	Roof Construction	Exterior Enclosure			Remove and replace existing, with complete integral assembly
	Water catchment system		1	20,000L	Provide complete system including foundation, gutters

Building 2

Function	Special Dimensions	Acoustics	Occupancy	Access	Other
Education					
Uniformat Level 4	**Uniformat Title**	**Description**	**Qty**	**Size**	**Remarks**
B201001	Unit Masonry	Cement block			Exterior Walls
C101001	Unit Masonry	Partitions of Cement block			Partitions and Interior Walls
C301001	Plaster Wall Finishes	Cement Plaster Wall Finish			Portland cement plaster wall finish
C302009	Hardeners and Sealers	Concrete Floor Finish			Pigmented concrete floor with 2 coats of hardener/sealer
C303002	Ceiling Finishes	Exposed Structure			Primer and 2 Finish Coats, colors to be selected by the Ministry of Education
C304004	Plaster Finishes	Wall and Ceiling Finish Coatings			Primer and 2 Finish Coats
B201002	Exterior Louvers and Screens	Exterior Enclosure	7		Repair/replace window frames and louvers. Daylighting/air flow will confirm to MoE requirements.
B2030	Exterior Doors	Exterior Enclosure	1		With all hardware - hinges, locks, latches, knobs, trim, integral assembly
B1020	Roof Construction	Exterior Enclosure			Remove and replace existing, with complete integral assembly

6. GENERAL WORK REQUIREMENTS

The work shall include a complete design and drawing package that meets all the requirements identified in this document. Contractor shall provide full design of the facility to include site drawings, structural drawings, architectural drawings, electrical drawings, plumbing drawings, mechanical drawings, and all calculations and details required to validate the design. The design shall meet all requirements of these Technical Requirements and the RFP package. Drawings to be as described in this document and as required to communicate the design to the US Government, final users,

contractor's staff and sub-contractors. Material selection, specifications and installation to be as described in the Engineering Systems Requirements (ESR) and the Performance Technical Specification (PTS) included in this document. The Engineering Systems Requirements (ESR) and the Performance Technical Specification (PTS) are a guideline for the design package. If an item in the project design is included in the ESR/PTS, the requirements of the ESR/PTS and applicable local codes shall govern. If an item in the project design is NOT included in the ESR/PTS, the requirements of applicable local codes shall govern. It is the Contractor's responsibility to identify and include all of these requirements in their proposal at the time of award.

6.1 REFERENCE STANDARDS

Construction shall be in accordance with sound construction practices, and shall conform to the latest revision/edition of the codes, criteria, and standards referenced below except as otherwise indicated by these Technical Requirements.

The Design shall comply with applicable codes, ordinances and regulations of the Republic of Tanzania and those of the Ministry of Education and Vocational Training and the Ministry of Health, governing the erection of structures for public use.

Any material installed that does not meet the requirements of the following Performance Technical Specification (PTS) and/or applicable codes, ordinances and regulations will be removed and reinstalled at Contractor's expense.

6.2 WORK REQUIREMENTS

The building construction and the site development as described from Part 1 through 5 shall be in accordance to the specifications provided in the following Parts 7 and 8. All the engineering system requirements described in the Part 7 are more detailed in the corresponding Part 8.

Special attention shall be paid to develop and adhere to the **STRUCTURAL DESIGN**, to adhere to the manufacturer's recommendations and the requirements of this PTS for the structural support and design of the pre-fabricated classroom building construction.

6.3 DESIGN GUIDANCE

Design shall be in accordance with sound design and engineering practices, manufacturer's specifications, and shall conform to the latest revision/edition of the codes, criteria, and standards referenced below except as otherwise indicated by this Technical Requirements. Design shall also comply with applicable codes, ordinances and regulations of the Republic of Tanzania governing life/safety, fire protection, building construction, and sanitation systems in effect during this contract, except where specifically stated herein.

The advisory provisions of all codes, requirements, and standards shall be mandatory; substitute words such as "shall", "must", or "required" for words such as "should", "may", or "recommended," wherever they appear. The results of these wording substitutions incorporate these code and standard statements as requirements. Reference to the "authority having jurisdiction" shall be interpreted to mean "Contracting Officer". Comply with the required and advisory portions of the current edition of the standard at the time of contract award.

The Government's intent is that all structures will be cast in place concrete frames with masonry infill walls. However, the last two sections of this document, in many instances, give multiple options for material and processes and may be applicable to construction, depending on the design approach proposed by the Contractor. It is the intent to give the contractor's designer freedom to use one or multiple options in the design, based upon sound design and engineering practices, requirements of the project, availability of materials and local labor skill sets. Once an option is selected for the project, all requirements outlined in the PTS for that option are to be incorporated in the design.

6.4 PERFORMANCE TECHNICAL SPECIFICATIONS

The specifications for this project are requirements based, meaning that the technical details of how to meet this requirement are not included in the PTS.

The contractor shall determine the technical requirements for satisfying these specifications and present them as part of the design package.

The contractor's design shall provide the technical requirements for the project and the contractor shall be responsible for ensuring their design meets all specifications presented in this SOW.

6.5 SUBMITTALS

Submittals consist of:

- Concept Design
- Final Design (including structural design calculations identifying the code used for the structural design)
- Construction Schedule
- Cost Proposal/Schedule of Materials
- Safety Plan
- Quality Control Plan
- Interim / construction submittals
- Completion submittals

The Government shall review each submittal and provide written comments to the contractor. In the event the contractor does not concur with the Government comments, the contractor shall notify the Government in writing of the reasons for the non-concurrence. Any deviations to this Performance Technical Statement must be duly identified on the submittal to the COR.

Concept Design

A concept sketch has been included in this RFP. The concept design is intended to assure all lay-out requirements are clearly met before the full design is developed. It identifies site preparation, including items to be removed and to be kept. It provides the basic architectural design, including plans, elevations and sections. Any deviations to the concept design must be submitted with your proposal. The Government shall review the concept design submission for compliance to these Technical Requirements and the RFP package and provide written comments to the contractor prior to award. The concept design shall be submitted **90** calendar days after the award date.
The concept design shall include the following drawings:

- Site Plan (identifying existing items to remain and new items)
- Floor Plans of new structures
- Exterior Elevations of new structures
- Sections of new structures
- **List of final design documents to be submitted**, to include an explanation of any documents listed below but not required

Final Design

The final design shall be submitted within 90 calendar days after the review of the concept design submittal is complete and comments are returned to the contractor. The final design shall incorporate all the comments from the US Government. In the event the contractor does not concur with the US Government comments, the contractor shall notify the contracting officer in writing of the reasons for the non-concurrence. The final design shall meet all the requirements identified in these Technical Requirements and the RFP package. Below is a baseline list of submittal requirements for this project. Additional submittals shall be transmitted as required by subsequent sections of this performance technical specification.

- Civil Drawings
- Site Demolition Plan
- Site Plan
- Grading Plan
- Utility Plan
- Architectural Drawings
- Floor Plans
- Roof Plans
- Room Finish Schedule
- Door and Window Schedules
- Exterior Elevations
- Building Sections
- Wall Sections
- Enlarged Plans
- Reflected Ceiling Plans
- Interior Elevations
- Stair Plan and Sections
- Door and Window Details
- Miscellaneous Details
- Structural Drawings
- Structural Notes/Basis of Design
- Pier Plan/Schedule
- Foundation Plan
- Floor and Roof Framing Plans
- Lateral-Force Resisting System
- Sections and Details
- Structure Calculation
- Mechanical Drawings
- Mechanical Plans
- Schematic Diagrams
- Equipment Schedules
- Miscellaneous Details
- Plumbing Drawings
- Plumbing Plans
- Plumbing Schedule
- Plumbing Riser Diagrams
- Miscellaneous Details
- Electrical Drawings
- Notes, Legends, Symbols List
- Distribution Switchboard Scheme
- Grounding System Plan
- Single Line Diagrams
- Floor Plans, power and lighting
- Circuit/breaker size calculation
- Miscellaneous Details
- Blackboard Product Data and Mounting

Elapsed timelines may be considered depending on which option is awarded, if any.

Construction Schedule

Within the timeframe allowed for the final design submission, the contractor shall prepare and submit a schedule of construction where the different work segments are identified and associated to the timeframe set for completion and includes percentage of completion. The construction progress schedule percentage completion determines the construction progress and will be used to prepare the invoices for payment.

Cost Proposal / Schedule of Materials

The Contractor shall submit a detailed Cost Proposal / Schedule of Materials broken down by construction activities with units and quantities. Costs for contingencies are not allowed in the proposals. Any unforeseen conditions or changes requested by the US Government after award will be handled via contract modification.

Safety Plan

Within the timeframe allowed for the final design submission, the Contractor will prepare and submit a Safety Plan describing procedures to be performed to ensure the safety of personnel and equipment on the job site. At a minimum, the safety plan must address types of personnel protective equipment to be used by personnel, types and frequencies of safety inspections, and the activities for which you will be submitting an activity hazard analysis (AHA). Include an accident prevention plan conforming to EM 385 -1-1 Appendix A, and training utilized to familiarize employees with safety policies and practices. Ensure the Site Safety and Health Officer (SSHO) has completed the 30-hour OSHA

Construction online safety course, or equivalent. The course providers can be found here: https://www.osha.gov/dte/outreach/training_providers.html. Completion certificate is a required submittal.

Demolition Plan

For all work where there is demolition or non-destructive removal of components of an existing facility, within the timeframe allowed for the final design submission, the Contractor will prepare and submit a Demolition Plan describing procedures to be performed to ensure the safety of personnel and equipment on the job site. The demolition plan must comply with EM 385 -1-1 Section 23, Demolition.

Quality Control Plan

Within the timeframe allowed for the final design submission, the Contractor will prepare and submit a Quality Control Plan describing personnel, procedures, tests and installation techniques to be performed to ensure the quality required by these Technical Requirements and the design is obtained.

Upon final acceptance of the design by the U.S. Government and approval of all submittals required by this section, the contractor shall be authorized to proceed with construction in writing. No construction work is authorized to start prior to the acceptance of the complete final submittal package.

Interim / construction submittals

During construction, the Contractor is required to submit:

- Bi-weekly work progress report with photos
- Monthly work man-hours report
- Test results as required per the contract
- At least 10 days prior to installation of all electrical components, plumbing fixtures, windows and doors and associated hardware, a sample (or catalog photo) must be shown to the KO or COR for acceptance.
- Possible construction schedule changes
- Possible design changes
- Invoices in accordance to work progress describing

Completion submittals

Once construction is complete but before the final invoice is paid, the Contractor is required to submit:

- Final as-built drawings
- Operations and maintenance plan
- A telephone contact number available for the duration of the warranty period

6.6 CONSTRUCTION GUIDANCE

Construction shall start after the submittal acceptance is issued by NAVFAC EURAFSWA Project Manager.

Construction shall be in accordance with sound construction practices, and shall conform to the latest revision/edition of the codes, criteria, and standards referenced below except as otherwise indicated by the Request for Proposal.

Construction shall also comply with applicable codes, ordinances and regulations of the Republic of Tanzania governing life/safety, fire protection, building construction, plumbing systems, electrical systems and sanitation systems in effect during this contract, except where specifically stated herein. Any material installed that does not meet the requirements of this document and/or applicable codes, ordinances and regulations will be removed and reinstalled at Contractor’s expense.

6.7 CERTIFICATIONS, LICENSES, PERMITS, FEES, ETC.

The Contractor shall be responsible for determining and paying all fees associated with, and obtaining any required permits for this project including, but not necessarily limited to permits for on-site and off-site hauling, demolition/disposal, storm water discharge, construction activity, utilities, road improvements, communications, etc.

The contractor is responsible for acquiring any required certifications (licensing). Coordinate all permit requirements with the Contracting Officer. Submit all completed permit application material, and associated back-up material, required to operate facilities, to the Contracting Officer for approval prior to agency submission.

Contractor shall be responsible for complying with environmental laws, regulations and requirements.

6.8 COORDINATION

All coordination with the local, regional, national authorities shall be the responsibility of the contractor.

The Contracting Officer shall be notified of any disputes between agencies or approvals that will affect Contract Completion or Contract Price.

6.9 VEGETATION CONTROL

The Contractor shall control vegetation within the work area during construction by treating with an approved herbicide/soil sterilizant and removing dead material as directed by the herbicide manufacturer's instructions. Treated material is to be removed to an off-site location as directed by the contracting officer.

The Contractor shall control the vegetation on staging and access areas of the site during construction by cutting so that the vegetation does not exceed 6 inch (15 cm) in height. Cut material is to be removed to an authorized off-site location. Contractor shall leave staging and access areas clean and in original condition at end of project.

6.10 RESPONSIBILITY OF MATERIALS

All materials delivered to the construction site shall remain in the ownership and responsibility of Contractor. Contractor will be responsible to safeguard the possession and condition of the material until US Government takes possession of the completed project.

Material that is not intended to become part of the project shall not be delivered, placed, retained nor stored on the project site.

All refuse or salvaged materials shall become the property of the Contractor and shall be properly disposed of at an authorized off-site location, in accordance with applicable regulations.

6.11 SAFETY AND INSPECTION

The contractor shall be responsible for a safe and hygienic work environment both on the project site and at off-site locations where work is done in conjunction with this project.

The contractor shall be responsible for the protection of all grounds, vegetation and improvements that exist and are to remain after the project is complete; with-in the project work areas, adjacent to the project work areas and along the common route of access to the site, outside of the work areas.

The Contractor shall be responsible to have any damage caused by Contractor's employees, equipment or sub-contractors repaired and restored to pre-damage condition, as approved by the PM, at no cost to the Government.

The Contractor shall be responsible for adequate and safe traffic control in work areas and along the common route of access to the site outside of the work areas. Traffic control shall include; Contractor's workforce traffic, vehicular traffic interfacing with Contractor's traffic and pedestrian traffic interfacing with Contractor's traffic. Traffic controls shall include; signage, barriers, pavement markings and traffic control personnel.

The Contractor shall comply with all applicable safety regulations of the Republic of Tanzania, including all required record keeping.

The Contractor shall maintain a first aid station on the jobsite as required by EM-385, which includes hardhats for all workers, an eye wash station, a first aid kit, safety vests, and potable drinking water.

The Contractor shall provide and maintain in working order during the entire construction period, such fire protective equipment and devices as required by applicable safety standards and as deemed necessary and suitable for any possible class or type of fires. Extinguishers shall be non-freeze type of not less than ten pound (5kg) capacity each.

Provide protection against rain, wind, or heat so as to maintain all work, materials, apparatus, and fixtures, incorporated in the work or stored on the site, free from injury or damage. At the end of the day's work, cover all new work likely to be damaged.

Contractor shall acquaint themselves with the location of utilities, which may be encountered or be affected by work, and shall be responsible for damage caused by neglect to provide proper precautions or protection thereof. Contractor shall contact local authorities to locate any utility, if necessary.

Provide, erect and maintain all required barricades, of sufficient size and strength necessary for protection of material storage, as well as to prevent accidents to the public and the workmen at the job site.

Watchmen will not be provided by the US Government. Contractor will be held responsible for loss or injury to persons or property where work is involved, and shall take such precautionary measures as they may deem necessary to protect their own interest.

Injuries to any person and damage to any property not belonging to the Contractor shall be reported immediately to the COR.

6.12 SPILL CONTAINMENT PLAN

While working the Contractor is liable for the containment, cleanup and disposal of all Contractor spills (equipment breakdowns, wash ups, clean ups of construction materials, etc.) in compliance with the rules and regulations of the Republic of Tanzania.

Contractor shall reimburse any third party for damage resulting from a spill and for costs incurred by the third party to clean up and dispose of waste at no cost to the Government.

Contractor's representative must have a copy of the spill clean up procedure and supplies on-hand equipment to control a spill.

When a spill occurs, Contractor's representative must notify the COR, comply with the contingency spill plan and complete, and file spill incident report within 24 hours of incident.
Contractors shall have, on the job site, spill cleanup materials and equipment to handle spills up to 5 gallons. At a minimum the Contractor's spill response kit should contain the following:

- Oil Absorbents

- Cellulose Socks
- Latex Gloves
- Dust Masks
- Disposal Bags or Containers
- Hand Wipes

Contractor shall identify the cleanup materials and equipment that they will have on the job site. The COR will be the sole judge of acceptability of Contractor's cleanup materials and equipment.

6.13 SPECIAL SITE CONDITIONS

Confine all operations, equipment, apparatus and storage of materials, to the immediate area of work to the greatest possible extent.

Contractor shall ascertain, observe and comply with all rules and regulations in effect on the project site, including, but not limited to parking and traffic regulations, use of walks, security restrictions, hours of allowable ingress and egress.

6.14 CLEANING

Contractor shall keep premises free of accumulations of surplus materials and rubbish caused by their operations. Combustible rubbish shall be removed from the premises each day. Burning of rubbish on premises is not permitted.

In addition, the Contractor shall perform final cleaning to remove all foreign matter, spots, soil and construction dust, so as to put the project in a complete and finished condition ready for acceptance and use intended.

All waste areas and storage areas will be cleaned up to the COR's satisfaction. All excess materials will be removed from the site and the Contractor will leave the premises free of debris and excess waste materials.

7. ENGINEERING SYSTEMS REQUIREMENTS

The contractor shall ensure the engineering plans are designed by licensed professional engineers as required. This includes, but is not limited to, the foundation, structural system, and electrical system. Contractor may be asked to submit proof of engineer licensure.

NOTE: This is an American document, and this note is to define the way in which numbers are presented herein:
1,000 = one thousand
3,500 = three-thousand five-hundred
1.08 = one and eight hundredths
0.1 = one-tenth

A10 FOUNDATIONS

System Description

Provide the building foundation system in accordance with the building codes and authority having jurisdiction. Foundation shall be designed to suit subsurface conditions, and shall be capable of transmitting all building loads to the ground. In addition, design the structure in accordance with the building codes and authority having jurisdiction. Load combinations shall include but not be limited to all applicable dead loads, roof live loads, floor live loads, wind loadings, and seismic loading.

General
The Contractor shall commission the services of a geotechnical engineer registered as a Professional Engineer in accordance with the authority having jurisdiction. Subsurface soil information, including a geotechnical report, are not included in this RFP. As a minimum, the successful bidder's Geotechnical Engineer shall perform an adequate number of borings to the required depth, and supplementary laboratory classification of soils encountered, on the building site to support the foundation design. A site-specific seismic ground motion study is not required, unless it is required to develop the spectral accelerations to adequately design the structure for the seismic loads.

A1010. STANDARD FOUNDATIONS
See "System Description" above. The foundation construction is anticipated to be reinforced cast-in-place concrete continuous footings at walls and spread footings at columns and pilasters, but may include any foundation system meeting the requirements of this section. [Do not use timber footings or wood foundations.

A1030. SLAB ON GRADE
Provide standard concrete slab on grade. Where slab on grade is below the existing adjacent exterior grade, provide a perimeter drainage system to remove ground water from the area immediately adjacent to the building[s]. Provide perimeter insulation.

B10 SUPERSTRUCTURE
System Description
Provide the building framing system in accordance with the building codes and authorities having jurisdiction. In addition, design the structure in accordance with the building codes and authority having jurisdiction. Load combinations shall include but not be limited to all applicable dead loads, roof live loads, floor live loads, wind loadings, and seismic loading.

B1010. FLOOR CONSTRUCTION
The floor construction is anticipated to be reinforced cast-in-place concrete slabs on removable forms, but may include any structural framing system meeting the requirements of this RFP. The floor is anticipated to be supported by reinforced concrete columns and beams, but may be supported by any structural system meeting the requirements of this RFP.

B1020. ROOF CONSTRUCTION
The roof construction is anticipated to be wood frame but may include any structural framing system meeting the requirements of this section. The roof deck is anticipated to be supported by reinforced concrete columns and beams, but may be supported by any structural system meeting the requirements of this RFP.

B1030. WALL CONSTRUCTION
The wall construction is anticipated to be reinforced cast-in-place columns and perimeter beams, with non-structural masonry infill, but may include any structural framing system meeting the requirements of this RFP.

B20 EXTERIOR ENCLOSURE
System Description
This system consists of the exterior facing of the facility, which includes all vertical and horizontal exterior closure such as exterior walls, exterior windows, and exterior doors. This system excludes roofing (See System B30, Roof). Structural frame elements at exterior such as columns, beams, load bearing exterior walls, spandrels, etc., are included in Superstructure, with only the applied exterior finishes (i.e., paint stucco, etc.) being included here. Finishes to the inside face of walls which are not an integral part of the wall construction will be included in System C30, Interior finishes.

B2010. EXTERIOR WALLS

The primary exterior material of the buildings shall be cast-in-place concrete with unit masonry infill wall systems as described in System B10, Superstructure faced on all exposed surfaces with painted stucco.

B201001. Balcony Walls, Guard Rails & Handrails

At any accessible horizontal surface, such as a floor, deck, veranda or roof, that is more than 30 inches (75 cm) above an adjacent surface, provide fall protection in the form of walls and/or guardrails. The walls and/or guardrails shall be 42 inches (100 cm) in height above the horizontal surface. Provide complete concrete and masonry walls and/or non-corrosive metal railing systems including anchors and attachment sleeves and fasteners. Balcony walls shall match the exterior walls of the building. Railing shall be ornamental to harmonize with the building.

At any stair into a building, between floors or that is a part of exterior walkways, provide handrails extending from 12 inches (30 cm) beyond the top step and 12 inches (30cm) beyond the bottom step. The walls and/or handrails shall be 32 inches (80 cm) in height above the nose of the steps. Provide complete concrete masonry walls and/or non-corrosive metal railing systems including anchors and attachment sleeves and fasteners. Handrail walls shall match the exterior walls of the building. Railing shall be ornamental to harmonize with the building.

Walls and rails shall be designed in such a way that a 4 inch (10cm) sphere can not pass through any point in the wall or rail.

B201002. Exterior Coatings

Provide field applied exterior coatings (paints, etc.) for all items that are not prefinished, and to prefinished items when required to provide a color other than a standard prefinished color.

B2020. EXTERIOR WINDOWS

As much as practical, windows shall be provided in each area of the building that is regularly occupied, to enhance the working environment, without compromising visual acuity and comfort. Natural daylighting is preferred.

B202001. Exterior Windows

Exterior windows shall be aluminum, plastic or hollow metal. Operable windows shall be provided with an integral insect screen.

B202002. Exterior Wall Vents

Provide open block vents with insect screens as required.

B201003. Exterior Louvers & Screens

Provide exterior louvers and screens, where required, that match the finish of the windows and detailed to integrate with the architecture of the building, as appropriate to the design of the building.

B2030. EXTERIOR DOORS

Provide hollow metal door assemblies at the exterior door openings. Provide door hardware as required to hang, swing, lock and operate doors.

B30 ROOFING

System Description

Roof systems shall be watertight and compatible with facility function, construction, and service conditions. Provide complete roof system design and construction services for the entire new facility roof system, including all ancillary and incidental work necessary for a complete, new, watertight roof system installation.

Design Submittal Requirements: roof plan, method of drainage, standard details and details unique to the project, wind load calculations and requirements.

Roofing systems shall be designed to resist wind uplift as indicated in System B10, Superstructure.

B3010. ROOF COVERINGS

B301001. Steep Slope Roofing Systems

Steep slope roofing systems (4:12 or greater) are preferred over low slope roofing systems, where practical. Steep slope roofing systems that are acceptable include metal, slate, concrete tiles, clay tiles, and asphalt shingles.

B301002. Low Slope Roofing Systems

Low slope roofing systems (Less than 4:12) that are acceptable include metal, slate, concrete tiles, clay tiles, and asphalt shingles. Low slope roofing systems that are acceptable include aggregate surfaced four-ply built-up roofing, three-ply built-up roofing systems with modified bitumen cap sheet surfacing or three-ply modified bitumen roofing.

C10 INTERIOR CONSTRUCTION

System Description

Interior construction includes interior partitions, interior doors, and specialties.
Provide durable construction appropriate to the buildings use.

C1010. PARTITIONS

All interior partitions shall be unit masonry.

C101001. Interior Guardrails

At any accessible horizontal surface, such as a floors and balconies, that are more than 30 inches (75 cm) above an adjacent surface, provide fall protection in the form of walls and/or guardrails. The walls and/or guardrails shall be 42 inches (100 cm) in height above the horizontal surface. Provide complete concrete and masonry walls and/or non-corrosive metal railing systems including anchors and attachment sleeves and fasteners. Balcony walls shall match the interior partitions of the building. Railing shall be ornamental to harmonize with the building.
At any stair provide handrails extending from 12 inches (30 cm) beyond the top step and 12 inches (30cm) beyond the bottom step. The walls and/or handrails shall be 32 inches (80 cm) in height above the nose of the steps. Provide complete concrete masonry walls and/or non-corrosive metal railing systems including anchors and attachment sleeves and fasteners. Handrail walls shall match the interior partitions of the building. Railing shall be ornamental to harmonize with the building. Walls and rails shall be designed in such a way that a 4 inch (10cm) sphere can not pass through any point in the wall or rail.

C101002. Interior Screens

Provide screen walls where required to prohibit view.

C1030. SPECIALTIES

C103001. Toilet Compartments And Accessories

Provide toilet compartments in all toilet rooms with more than one water closet. Provide toilet accessories as indicated in Section 3, “Room Requirements” portion of this RFP.

C103005. Toilet Compartments Doors

Provide toilet compartments in all toilet rooms with an exterior weather resistant door of wood or hollow metal. All door frames shall be wood or hollow metal to match the doors. Provide door hardware as required to hang, swing, lock and operate doors. All wood shall be naturally insect resistant or treated to be insect resistant.

C1040. INTERIOR DOORS

C104001. Standard Interior Doors

All interior doors shall be hollow metal. All interior door frames shall be hollow metal to match the doors. Provide door hardware as required to hang, swing, lock and operate doors.

C104002. Glazed Interior Doors

Provide vision glazing in doors where it is required by the “Room Requirements” portion of this RFP, or it is deemed advantageous to be able to see through the door, either for safety of pedestrian traffic, or other functional reason.

C20 STAIRS

System Description

If required due to site elevation variations, provide stairs, including stair construction and stair finishes in accordance with the building codes and authority having jurisdiction. Provide as required to provide access and egress from the building from above or below grade level floors. Stairs shall meet all requirements of the International Building Code.

C2010. STAIR CONSTRUCTION

C201001. Interior And Exterior Stairs

Interior stairs shall be constructed of cast-in-place concrete.
Exterior stairs shall be constructed of cast-in-place reinforced concrete.
Concrete is an acceptable finish for exterior stairs.

C201002. Fire Escape Stairs

Design fire escapes of the type and arrangement in accordance with the building codes and authority having jurisdiction.

C201090. Handrails, Guardrails, And Accessories

Provide handrails and guardrails as described herein.
Handrails and guardrails shall be painted steel, galvanized steel, stainless steel, pre-finished aluminum, pre-finished steel or wood. Handrails and guardrails shall present a smooth, unbroken surface throughout the length of the stair.
Handrails and guardrails shall be finished to withstand extreme wear conditions.

C30 INTERIOR FINISHES

System Description

Interior finishes include wall finishes, floor finishes, wall base finishes, and ceiling finishes.
Provide aesthetically pleasing, functional, durable finishes appropriate to the buildings use. Acoustic properties of materials, as well as durability and ease of maintenance, shall be considered during material selection. Maximize the use of sustainable materials.
See “Room Requirements” for specific requirements on “Interior Finishes.”

C3010. WALL FINISHES

Interior wall finish materials shall be painted cement plaster, ceramic tile or natural marble.
All interior wall finishes shall be as indicated in the “Room Requirements” portion of this RFP.

C3020. FLOOR FINISHES

Primary floor finish shall be ceramic tile except as indicated in the “Room Requirements” portion of this RFP. Edges of tile work not against a wall, including changes in floor height, shall be finished with a rounded factory tile edge. If edge tile needs to be cut, place cut edges toward grout line.
Exposed concrete floors shall be coated with a sealer appropriate to the function of the space.

C3030. CEILING FINISHES

Ceiling finishes shall be as indicated in the “Room Requirements” portion of this RFP.
Exposed structural systems shall be painted.

C3040. INTERIOR COATINGS AND SPECIAL FINISHES

Paint all interior exposed wood or metal items.

D50 ELECTRICAL

System Description

Provide an interior electrical system consisting of Service Entrance Wiring and Equipment, Distribution and Lighting Panel boards, Dry Type Transformers, Conduits, Feeder and Branch Circuits, Motor Control Equipment, Lighting and Branch Wiring, Communications, Security and Alarm Systems, Emergency Lighting and Power, and Grounding, including accessories and devices as necessary and required for a complete and usable system. The interior distribution system shall consist of insulated conductors in conduit. This section covers installations out to the building 1.5 meter (5 foot) line.

General System Requirements

Provide an Electrical System complete in place, tested and approved, as specified throughout this RFP, as needed for a complete, usable and proper installation. All equipment shall be installed per the criteria of Section D50 and the manufacturer’s recommendations. Where the word “should” is used in the manufacturer’s recommendations, substitute the word “shall”.

D5010. Electrical Service And Distribution

D501001. Main Transformers

Main transformer(s) are defined in Section G40, *Site Electrical Utilities*.

D501002. Service Entrance Equipment

All service into the facility shall be underground.
Provide a main distribution panel switchgear as service equipment. Provide each service entrance with digital metering.

D501003. Interior Distribution Transformers

Provide dry type transformers to step down secondary voltages for general purpose outlets and other low voltage equipment.

D501004. Panelboards

Provide distribution and branch circuit panelboards to serve loads as required.

D501005. Enclosed Circuit Breakers

Provide enclosed circuit breakers.

D5020. Lighting And Branch Wiring

Provide electrical connections for all systems requiring electrical service.
Provide lighting and general purpose receptacles throughout all spaces as required.
Provide a ceiling mounted power receptacle in each classroom for a video projector. **NOTE: the projectors are not included in this contract.**
Provide 8 floor mounted receptacles in each classroom. Design to coordinate with student desk arrangement. **NOTE: desks are not included in this contract.**
Provide dedicated circuits and connections for the following special outlets: all ceiling projectors and all floor outlets.

D502001. Branch Wiring

All branch wiring shall be insulated conductors in conduit.

D502002. Lighting Equipment

Provide a complete lighting system consisting of exit and emergency lighting and area lighting consisting of fluorescent, incandescent and/or high intensity discharge lighting including switches and dimming systems. Lighting must be sufficient to meet lumen or foot-candle requirements of the Ministry of Education.

D502003. Finish Trim

Provide escutcheons or other finish trim where conduits penetrate visible, finish wall surfaces.

D5030. Communications And Security

Not provided

D503001. Telecommunications Systems

Not Provided

D503002. Public Address Systems

Not Provided

D503003. Intercommunications Systems

Not Provided

D503004. Television Systems

Not Provided

D503005. Security Systems

Not Provided

D5040. Other Electrical Services

D504001. General Construction Items (Electrical)

Provide General Construction Items (Electrical) including, but not necessarily limited to, all connections, fittings, boxes and associated equipment needed by this and other sections of this RFP as required for a complete and usable system.

D504002. Emergency Lighting And Power
Provide power and wiring for emergency lights and exit lights throughout the facility as required by the Ministry of Education in Tanzania.

D504003. Grounding Systems
Provide a complete grounding system for the facility electrical systems.

G10 SITE PREPARATION

System Description
The site preparation system consists of site clearing, and earthwork necessary to ready the site for other work associated with the project.
Develop the project site and perform all off-site work necessary to meet the requirements of the project, local codes, reference standards, technical specifications and performance criteria.
A topographic survey of the existing site has not been performed. Prior to starting work, the Contractor is to obtain all topographic survey data required to provide a quality final design.
A geotechnical survey of the existing site has not been performed. Prior to starting work, the Contractor shall evaluate the RFP data, obtain and evaluate all additional data as required to support the design and construction.
The Contractor shall inspect excavations and soil/groundwater conditions throughout construction.
The Contractor shall be responsible for performing pre-construction and periodic site visits throughout construction to assess site conditions. The Contractor, with the concurrence of the Contracting Officer, shall update the excavation, sheeting, shoring and dewatering plans as construction progresses to reflect actual site conditions and shall submit the updated plan informing the Contracting Officer of the status of the plan and an accounting of Contractor adherence to the plan; specifically addressing any present or potential problems.
Minimize the impact of construction activity on operations and neighboring facilities.
Identify and obtain all permits to comply with all national, regional, and local regulatory requirements associated with this work. Contractor shall determine correct permit fees and pay said fees. Copies of all permits, and permit applications shall be forwarded to the Contracting Officer.

G1010. SITE CLEARING

G101001. Clearing
All plant material removed from the project site shall be disposed of off-site.
Burning will not be allowed.

G1020. SITE EARTHWORK

G102001. Grading
Finished grade shall slope away from buildings at 1:10 for a distance of 6 feet (3 m) from building.
Finish floor elevations for new facilities shall be 12 inch (30 cm) minimum above the highest adjacent finished grade.

G102002. Blasting
Blasting will not be permitted.

G102003. Compaction
Compact fill material to near density of existing site.

G102004. Slope Stabilization
Provide slope stabilization through appropriate grading and site design for a minimum slope of 1:2.

G1030 1.5. DISPOSAL
All waste materials shall become the property of the Contractor and shall be transported, disposed of and/or recycled off site.

G20 SITE IMPROVEMENTS

System Description
The site improvements system consists of landscaping and other exterior site development work related to this project.

Provide site improvements as required to make a useable facility that meets functional and operational requirements and blends into the existing environment. Identify and obtain all permits to comply with all federal, and local regulatory requirements associated with this work. Minimize the impact of construction activity on operations and neighboring facilities.

Locate new site improvements at locations indicated on the drawings in another part of this RFP. If specific locations are not provided, site the improvements to develop appropriate and positive relationships with other facilities and to conform to existing development patterns.

Refer to Site Analysis and Building Requirements Sections for additional site improvement functional program information.

G2040. SITE DEVELOPMENT
G204001. Freestanding Walls & Gates

Provide boundary/security walls as indicated on the drawings in another part of this RFP.
Provide boundary/security walls constructed of plaster faced unit masonry to match construction and finish and color of exterior walls of building.
Provide ornamental gates of wrought iron along with associated hardware.

8. PERFORMANCE TECHNICAL SPECIFICATION

NOTE: This is an American document, and this note is to define the way in which numbers are presented herein:
1,000 = one thousand
3,500 = three-thousand five-hundred
1.08 = one and eight hundredths
0.1 = one-tenth

SECTION A10: FOUNDATIONS [6/07]

A10 GENERAL
1.1 Design Guidance

1.1.1 Provide the design and installation in accordance with this Performance Technical Specification.

1.1.2 In the absence of design guidance from the authority having jurisdiction, the Design A&E shall design according the following:

1.1.2.1 Load combinations in accordance with the approved authority having jurisdiction shall be used in design. Load combinations should include all loads to which the building will be subjected to. In the absence of a governing building code the following load combinations shall be used:

1.1.2.1.1 Strength Design:
1.4(D+F)
1.2(D+F+T)+1.6(L+H)+0.5(Lr or S or R)
1.2D+1.6(Lr or S or R)+(L or 0.8W)
1.2D+1.6W+L+0.5(Lr or S or R)
1.2D+1.0E+L+0.2S
0.9D+1.6W+1.6H
0.9D+1.0E+1.6H

1.1.2.1.2 Allowable Stress Design:
(D+F)
D+H+F+L+T
D+H+F+(Lr or S or R)
D+H+F+0.75(L+T)+0.75(Lr or S or R)
D+H+F+(W or 0.7E)
D+H+F+0.75(W or 0.7E)+0.75L+0.75(Lr or S or R)
0.6D+W+H
0.6D+0.7E+H

1.1.2.1.3 Where:
D = Dead Load
E = Earthquake Load

F = Load to fluids with well defined pressures and maximum heights
H = Load to lateral earth pressure, ground water pressure, or pressure over bulk materials
L = Live Load
Lr = Roof live load
R = Rain Load
S = Snow Load
T = Self straining force
W = Wind load

1.1.2.1.4 Dead Loads
Dead loads consist of the weight of all materials of construction incorporated into the building including, but not limited to, walls, floors, roofs, ceilings, stairways, built-in partitions, finishes, cladding, and other similarly incorporated architectural and structural items, and fixed service equipment including the weight of cranes.
In determining dead loads for purposes of design, the actual weights of materials and constructions shall be used provided that in the absence of definite information, values approved by the authority having jurisdiction shall be used.
In determining dead loads for purposes of design, the weight of fixed service equipment, such as plumbing stacks and risers, electrical feeders, and heating, ventilating, and air conditioning systems shall be included.
1.1.2.1.5 Live Loads
Live loads for occupancies shall be in accordance with the authority having jurisdiction.
Live loads shall not be less than the following:
Occupancy: Classroom
Uniform Live load: 1.92 kN/m2
Concentrated Live Load: 4.45 kN
Occupancy: Corridor
Uniform Live load: 4.79 kN/m2
Concentrated Live Load: 4.45 kN
Occupancy: Office Space
Uniform Live load: 2.4 kN/m2
Concentrated Live Load: 8.9 kN
Occupancy: Roof
Uniform Live load: 0.96 kN/m2
1.1.2.1.6 Importance Factors
Importance Factors for design shall be in accordance with the approved authority having jurisdiction.
1.1.2.1.7 Wind Exposure
Wind design and corresponding exposure category shall be in accordance with the approved authority having jurisdiction.
1.1.2.1.8 Earthquake Loads
Earthquake Loads shall be generated in accordance with locally approved authority having jurisdiction.

1.2 Construction Guidance

1.2.1 The Contractor shall provide all plant, labor, material, and equipment necessary to provide, deliver and place exterior walls to form exterior enclosure as specified herein.

1.3 General Requirements

1.3.1 Earthwork shall be performed in accordance with means and methods in compliance with the laws and building codes of the authority having jurisdiction.

1.3.2 Geotechnical Report
1.3.2.1 The Contractor-provided geotechnical engineer, shall be experienced with soil conditions in the region where the project site is located. The geotechnical engineer shall evaluate the RFP data, obtain and evaluate all additional data as required to support the design and construction, and prepare a Geotechnical Report.
1.3.2.2 Subsurface Soils Information
1.3.2.2.1 The data included in this RFP are intended for proposal preparation and preliminary design only. Contractor shall perform, at his expense, such subsurface

exploration, investigation, testing, and analysis as his Designer of Record deems necessary for the design and construction of the foundation system.

1.3.2.2.2 Prior to the Foundation Work Design submittal include a Contractor Geotechnical Report (electronically submitted) for review and record keeping purposes. The report shall become the property of the Government. Geotechnical reports generated during construction, such as pile driving results and analysis, shall be provided to the Contracting Officer (electronically submitted) for record keeping purposes.

1.3.2.3 Contractor-Provided Geotechnical Report

1.3.2.3.1 Submit a Geotechnical report, electronically submitted, based upon Government-provided subsurface investigation data and all additional field and laboratory testing accomplished at the discretion of the Contractor's Geotechnical Engineer. The Geotechnical Report shall include the following:

The project site description, vicinity map and site map.

Results of all the field and laboratory testing, Contractor-provided.

Engineering analysis, discussion and recommendations addressing:

Settlement

Bearing Capacity

Foundation selection and construction considerations (shallow, deep, special); dimensions, and installation procedures.

Site preparation (earthwork procedures and equipment), compaction requirements, building slab preparation (as applicable), soil sensitivity to weather and equipment, and groundwater influence on construction

Sheeting and shoring considerations, as applicable

Pavement design parameters, actual or assumed, including recommended thicknesses and materials, be for design or for proposed modifications to the RFP provided pavement design only

Haul routes and stockpile locations for earthwork, as applicable

Calculations to support conclusions and recommendations

Recommendations shall be presented on a structure-by-structure basis

1.3.2.3.2 The Geotechnical Report shall be signed by a Geotechnical Engineer registered with the jurisdiction having authority.

1.3.2.3.3 The submitted report shall be accomplished by a cover letter identifying any recommendations of the report proposed to be adopted into the design which are interpreted by the Contractor as either conflicting with or being modifications to the Geotechnical or Pavement related requirements of the RFP.

1.3.2.4 Geotechnical Site Data required in Design Drawings

1.3.2.4.1 The Contractor's final design drawings shall include the Government-provided subsurface data presented in the RFP as noted below, as well as any additional borings and laboratory test result data performed by the Contractor.

Logs of Borings and related summary of laboratory test results and groundwater observations.

The locations of all borings shall be indicated on the drawings. The applicable design drawings shall be revised to reference the Contractor's Geotechnical Report as being a basis for design.

A1010 STANDARD FOUNDATIONS

1.1 Provide sheeting and shoring as required. Sheeting and shoring plans shall be signed by the Contractor's geotechnical/structural engineer.

1.2 Termite Control Barrier System

1.2.1 Formulate and apply termiticide in accordance with the manufacturer's label directions. The termiticide label shall bear evidence of registration by the appropriate requirements of the host country.

1.2.2 Apply termiticide to the soil that will be covered by or lie immediately adjacent to the building(s) and structure(s), providing a protective barrier against subterranean termites.

1.2.3 Applicator(s) shall be licensed or certified the host country, as applicable.

1.2.4 To maintain resistance to termites, complete the system and do not disturb, penetrate or damage during the remaining contract time period. Provide Manufacturer's Guidance for performing a visual assessment of the installed system to ensure the system provides the designed termite physical barrier.

A101001 Wall Foundations

1.1 Provide concrete foundation walls as required in accordance with the requirements of this section and other portions of this RFP.
1.2 Concrete footings for walls must have a minimum thickness of 12 inches (305mm) and a minimum width of 18 inches (460mm).

A101002 Column Foundations And Pile Caps

1.1 Provide concrete column foundations or pile caps and grade beams as required in accordance with the requirements of this section and other portions of this RFP.
1.2 Concrete column footings must have a minimum thickness of 12 inches (305mm) and a minimum width of 18 inches (460mm).

A101003 Foundation Drainage

1.1 If required, perimeter drainage system shall be provided to remove water away from the foundation of the facility and to be deposited in the storm sewerage system of the site. Pipe for the foundation drainage system shall be of the type specified, shall be perforated, and shall be of a size sufficient to remove water from the foundation successfully. Provide one, or a combination of more than one, of the following types of pipe:

Corrugated Polyethelene (PE) Drainage Pipe

Acrylonitrile-Butadiene-Styrene (ABS) Pipe

Polyvinyl Chloride (PVC) Pipe
Installation shall include wrapping the pipe with filter fabric sock and careful bedding of the pipe with appropriate fill material to ensure that the pipe does not become filled with the bedding material.

A1020 SLAB ON GRADE

1.1 Provide standard concrete slab on grade to meet the required loading requirement in accordance with the requirements of this section and other portions of this RFP.
1.2 Floor slab on grade shall be designed and constructed so that any settlement of the floor slab shall not result in harmful distortion of the floor, or vertical misalignment of the floor with other building components (doorways, trenches, etc.).

A102001 Concrete Slabs On Grade

1.1 Concrete floor slabs on ground must be reinforced and shall have a thickness of not less than 100mm. Vapor retarders shall not be less than 0.25mm thick. Minimum reinforcing shall be #10 reinforcing bars at 405mm on center or 152x152xMW18.7xMW18.7 welded wire reinforcing (do not use roll type). The slab reinforcing shall be placed on firm supports approximately 1/3 the slab depth from the top of slab with a minimum cover of 38mm. Fiber reinforcing in the concrete mix shall not be considered as replacing the steel reinforcing.
1.2 For concrete floor slabs on ground, the maximum length of any continuous placement shall be 30.5m between construction or expansion joints. Within any placement, the maximum spacing between control joints shall be 7.6m in each direction. Slab reinforcing shall not continue through construction and control joints.

A102002 Slab On Grade Insulation

1.1 Provide only thermal insulating materials recommended by manufacturer for perimeter insulation. Provide either cellular glass or extruded preformed cellular polystyrene block thermal insulations.
1.2 The thickness of insulation and thermal resistance value shall be sufficient to meet the applicable building codes in accordance with the local jurisdiction having authority.

A1030 ELEVATED FLOOR SLABS

1.1 Concrete for floor construction must have a 28 day compressive strength of 24MPa in accordance with compressive strength cylinder tests as approved by authority having local jurisdiction. Maximum concrete slump shall be 100mm unless a high water reducing admixture has been used; in which case the maximum concrete slump can be increased to 200mm.

1.2 The following maximum water-cement ratios must apply to all structural concrete:

Compressive Strength	Without AE	With AE
20.7MPa	0.58	0.50
24.1MPa	0.54	0.48
27.6MPa	0.50	0.45

Where, AE = Air Entrainment

1.3 Proportions of materials for concrete shall be established to provide:

1.3.1 Workability and consistency to permit concrete to be worked readily into forms and around reinforcement under conditions of placement to be employed, without segregation or excessive bleeding.

1.3.2 Resistance to any special exposure conditions.

1.3.3 Conformance with the specified compressive strength requirements.

A1040 CONCRETE

1.1 The work shall be performed as described herein. The work consists of providing shallow wall foundations, building slabs and veranda slabs and all other building components designed by the Contractor to be reinforced concrete.

1.2 Provide a difference in height between 15cm (6 in) and 17.5cm (7 in) from adjacent grade and the veranda slab.

1.3 Provide a difference in height between 15cm (6 in) and 17.5cm (7 in) from the veranda slab and the floor slab.

1.4 The construction documents for structural concrete construction shall include:

The specified compressive strength of concrete at the stated ages or stages of construction for which each concrete element is designed.

The specified strength or grade of reinforcement.

The size and location of structural elements, reinforcement, and anchors.

Anchorage length of reinforcement and location and length of lap splices.

A104001 Concrete Materials

1.1 Cement shall be Portland cement and acceptable with locally approved authority having jurisdiction.

1.2 Locally available aggregates shall be provided in accordance with locally approved authority having jurisdiction. Aggregates provided shall produce concrete of adequate strength and durability in accordance with requirements of this RFP and locally approved authority having jurisdiction. Nominal maximum size of aggregate shall not be larger than:

1/5 the narrowest dimension between sides of forms, nor

1/3 the depth of the slab, nor

3/4 the minimum clear spacing between individual reinforcing bars or wires, bundles of bars, individual tendons, bundled tendons, or ducts.

1.3 Water used in mixing concrete shall be clean and free from injurious amounts of oils, acids, alkalis, salts, organic materials or other substances that are deleterious to concrete or steel reinforcement

1.4 Sand used in mixing concrete shall be clean and free of chlorides or other substances that would cause reduced durability of the finished concrete and/or deterioration of the steel reinforcement. Beach sand used in a concrete mix shall be thoroughly washed and free of salts and chlorides.

1.5 Steel reinforcement shall be deformed reinforcement, except plain reinforcement is permitted for spirals or prestressing steel. Reinforcing shall have a minimum yield strength of 413 MPa (413,685 kN/m2). The yield strength shall be taken as the stress corresponding to a strain of 0.35%.

1.6 Admixtures shall be in compliance with locally approved authority having jurisdiction.

A104002 Concrete Formwork

1.1 Forms shall result in a final structure that conforms to the shapes, lines, and dimensions of the members as required by the design drawings and specifications.

1.2 Forms shall be substantially tight to prevent leakage of material.

1.3 Forms shall be properly braced or tied together to maintain position and shape.

1.4 Design of formwork shall consider: rate and method of placing concrete; construction loads – including vertical, horizontal, and impact loads.
1.5 Forms shall be removed in such a manner as not to impair safety and serviceability of the structure. Concrete exposed by form removal shall have sufficient strength not to be damaged by removal operation.

A104002 Concrete Reinforcement

1.1 Reinforcing bars with standard hooks shall meet the following dimensional requirements:

1.1.1 180 degree bend plus 4xbar diameter extension, but not less than 2.5 inches (65mm)

1.1.2 90 degree bend plus 12xbar diameter extension at free end of bar.

1.1.3 For stirrups and tie hooks:

1.1.3.1 #16 bars and smaller, 90 degree bend plus 6xbar diameter extension at free end of bar

1.1.3.2 #19, #22, and #25 bars, 90 degree bend plus 12xbar diameter extension at free end of bar

1.1.3.3 #25 bar and smaller, 135 degree bend plus 6xbar diameter extension at free end of bar

1.2 Diameter of bend measured on the inside of the bar, other than for stirrups and ties in sizes #10 through #16 shall not be less than the values shown in the table below.
1.3 Inside diameter of bend for stirrups and ties shall not be less than 4xbar diameters for #16 bar and smaller. For bars larger than #16, diameter of bend shall be in accordance with table below.

Bar size	Minimum Diameter
#10 through #25	6 x bar diameters
#29, #32, #36	8 x bar diameters
#43 and #57	10 x bar diameters

1.4 All reinforcement shall be bent cold.
1.5 Reinforcement partially embedded in concrete shall not be field bent.

A104003 Placing Concrete Reinforcement

1.1 Reinforcement shall be accurately placed and adequately supported before concrete is placed and shall be secured against displacement.
1.2 The minimum clear distance between parallel bars in a layer shall be equal to the diameter of the bar, but not less than 1 inch (25mm).
1.3 Where parallel reinforcement is placed in two or more layers, bars in the upper layers shall be placed directly above bars in the bottom layer with clear distance between layers not less than 1 inch (25mm).
1.4 In spirally reinforced or tied reinforced compression members, clear distance between longitudinal bars shall not be less than 1.5 x bar diameter nor less than 1.5 inches (38mm).
1.5 Clear distance limitation between bars shall apply also to the clear distance between a contact lap splice and adjacent splices or bars.
1.6 In walls or slabs other than concrete joist construction, primary flexural reinforcement shall not be spaced farther than three times the wall or slab thickness, or farther apart than 18 inches (455mm).
1.7 At the time concrete is placed, reinforcement shall be free from mud, oil, or other nonmetallic coatings that decrease bond.
1.8 The following minimum concrete cover shall be provided for reinforcement:

a. Concrete cast against and permanently exposed to earth

	3”	75mm

b. Concrete exposed to earth or weather:

#19 bar through #57 bars	2”	50mm
#16 bars and smaller	1.5”	38mm

c. Concrete not exposed to weather or in contact with ground:

Slabs, walls, and joists:		
#43 and #57 bars	1.5”	38mm
#36 bars and smaller	.75”	19mm
d. Beams, columns:		
Primary reinforcement, ties, stirrups, spirals	1.5”	38mm
e. Shells, folded plate members:		
#19 bar and larger	0.75”	19mm
#16 bar and smaller	0.5”	13mm

A104004 Concrete Mixing

1.1 All concrete shall be mixed until there is a uniform distribution of materials and shall be discharged completely before mixer is recharged.

1.1 Job mixed concrete shall be mixed in a batch mixer approved by the locally approved authority having jurisdiction. The mixer shall be rotated at a speed as recommended by the manufacturer. The mixing shall be continued for at least 1-1/2 minutes after all materials are in the drum. A detailed record shall be kept to identify the number of batches produced, proportions of materials used, approximate location of final deposit in structure and the time and date of mixing and placing.

A104005 Concrete Conveying

1.1 Concrete shall be conveyed from mixer to place of final deposit by methods that will prevent separation or loss of materials. Conveying equipment shall be capable of providing a supply of concrete at site of placement without separation of ingredients and without interruptions sufficient to permit loss of plasticity between successive increments.

A104006 Concrete Depositing

1.1 Concrete shall be deposited as nearly as practical in its final position to avoid segregation due to rehandling or flowing. Placing of concrete shall be performed at such a rate that concrete is at all times plastic and flows readily into spaces between reinforcement. Concrete that has partially hardened or been contaminated by foreign materials shall not be deposited in the structure. Retempered concrete that has been remixed after initial set shall not be used. Placing of concrete shall be continuous until placing of panel or section, as defined by its boundaries or predetermined joints is completed. Top surfaces of vertically formed lifts shall be generally level. All concrete shall be thoroughly consolidated by suitable means during placement and shall be thoroughly worked around reinforcement and embedded fixtures and into corners of forms.

A104007 Concrete Curing

1.1 Curing of concrete shall be performed in accordance with the locally approved authority having jurisdiction. At a minimum concrete shall be maintained above 50˚F (10˚C) and in a moist condition for at least the first 7 days after placement.

A104008 Hot Weather Concrete

1.1 Concrete placement operations in hot weather conditions shall be performed in accordance with the locally approved authority having jurisdiction. During hot weather, proper attention shall be given to ingredients, production methods, handling, placing, protection, and curing to prevent excessive concrete temperatures or water evaporation that could impair required strength or serviceability of the member or structure.

A104009 Concrete Construction Joints

1.1 Location of construction joints shall be as approved by the Engineer responsible for the design and the locally approved authority having jurisdiction.

A104010 Concrete Testing

1.1 Concrete shall be tested by field technicians qualified in accordance with the locally approved authority having jurisdiction. Tests shall be performed on fresh concrete at the job site; prepare specimens required for curing under field conditions; prepare specimens required for testing in the laboratory, and record the temperature of the fresh concrete when preparing specimens for strength tests. Technicians qualified in accordance with the locally approved authority having jurisdiction shall perform laboratory tests.

1.2 Sampling shall be performed at the rate required by the jurisdiction having authority. If not specified, samples for strength tests of each class of concrete placed each day shall be taken not less than once a day, nor less than once for each 115 m3 of concrete, nor less than once for each 460 m2 of surface area for slabs or walls.
1.3 On a given project, if total volume of concrete is such that frequency of testing required would be less than five strength tests for a given class of concrete, tests shall be made from at least five randomly selected batches or from each batch if fewer than five batches are used.

-- End of Section –

SECTION B10: SUPERSTRUCTURE [06/07]

B10 GENERAL

1.1. Design Submittal

1.1.1 Provide the design and installation in accordance with Section 6 General Work Requirements.

1.2. Construction Submittals

1.2.1 The Contractor shall provide all plant, labor, material, and equipment necessary to provide, deliver and place exterior walls to form exterior enclosure as specified herein.

B1010 CONSTRUCTION COMPONENTS

1.1 Structural frame elements may include columns, girders, beams, trusses, joists, moment frames, shear walls, and/or bracing. See Section B20, *Exterior Enclosure*, for additional requirements for exterior walls used as load-bearing walls or shear walls.
1.2 Provide structural interior walls as required in accordance with the requirements of this section and other portions of this RFP. See Section C10, *Interior Construction*, for additional requirements.
1.3 Provide floor decks as required in accordance with the requirements of this section and other portions of this RFP.
1.4 Provide roof deck as required in accordance with the requirements of this section and other portions of this RFP.
1.5 Provide canopies as required in accordance with the requirements of this section and other portions of this RFP.

B1020 WOOD

1.1 The design and construction of structural elements or systems constructed partially or wholly of wood or wood based products shall be performed in accordance with the locally approved authority having jurisdiction.
1.2 The moisture content of lumber must not exceed 19 percent for dimensional lumber or 25 percent for timbers at the time of delivery to the site. For other lumber products the moisture content must be in accordance with the standard under which the product is produced.
1.3 The minimum thickness of wood structural panels used for horizontal or vertical diaphragms must be 1/2 inch (12.7mm).
1.4 All wood framed walls must be anchored to foundations with galvanized anchors as needed to resist the design forces. Anchors for exterior walls, interior load bearing walls and shear walls must not be less than 12.7 diameter embedded anchor bolts, expansion bolts, or adhesive anchor system with 4 inch (100mm) embedment spaced a maximum of 120cm on center. Anchors for interior non-bearing, non-shearwall partitions must not be less than 10mm diameter embedded anchor bolts, expansion anchors, or adhesive anchor systems with 4 inch (100mm) embedment spaced a maximum of 48 inches(120cm) on center, or with 1/8 inch(3.7mm) diameter powder actuated fasteners spaced at 6 inches(610mm) on center.
1.5 Trusses and glued laminated members shall be designed and constructed using machine graded or machine evaluated lumber.
1.6 Plant fabricated metal plate connected wood trusses must be produced and certified in accordance with the locally approved authority having jurisdiction.
1.7 All wood must be of a naturally insect resistant variety or treated for termite resistance.

B1030 UNIT MASONRY

1.1 General

1.1.1 The design and construction of structural elements or systems constructed partially or wholly of masonry products shall be performed in accordance with the locally approved authority having jurisdiction.

1.1.2 The work shall be performed as described herein. The work consists of providing masonry structural and non-bearing walls as required to enclose the programmed spaces and as required by the construction documents.

1.1.3 The contractor shall provide all plant, labor, and equipment necessary to provide, deliver and place plastered masonry walls ready for painting.

1.1.4 Empirical Design Of Masonry Shall Be Prohibited.

1.2 Unit Masonry Materials

1.2.1 Masonry units shall be cements block, fired clay block or fired brick.

1.2.2 All concrete masonry shall have a specified compressive strength of not less than 1500 psi (10.3 Mpa).

1.2.3 All clay masonry must have a specified compressive strength of not less than 1000 psi (6.9 Mpa).

1.2.4 Masonry units used on exterior walls shall be nominal 8 inches (20cm) thick.

1.2.5 Masonry units used on interior walls unsupported for more than 9 foot (3m) shall be 6 inches (15cm) thick.

1.2.6 Masonry units used on all other interior walls shall be 10cm thick.

1.2.7 Mortar shall consist of a mixture of cement materials, sand and water. Mixture shall be formed by Portland cement, hydrated lime or lime putty and wet loose aggregates. All components shall be properly batched in volume.

1.2.8 Fluid concrete for reinforced masonry and grade beams shall be coarse grained type and shall consist of a gravel mixture with the following proportions: one part Portland cement, 1/4 part slanted lime, 3 parts sand and 3 parts fine gravel passing 1/2 inch (12 mm) sieve. It shall reach a 28 day minimum compressive strength of 2500 psi (17.2 MPa).

1.2.9 All reinforcing bars, unless noted on the plans, shall be deformed bars. Reinforcing bars 1 inch (25 mm) in diameter and smaller shall be high strength helically deformed bars, with minimum yield strength of 60 ksi (413 MPa).

1.3 Unit Masonry Placement

1.3.1 Blocks dimensions will be as required obtain thickness and types of indicated walls and will be subjected to specified tolerances in accordance with locally approved authority having jurisdiction.

1.3.2 Lay the first course in a full bed of mortar for the full width of the unit. Lay succeeding courses in running bond unless otherwise indicated. Form bedjoints by applying the mortar to the entire top surfaces of the inner and outer face shells. Form head joints by applying the mortar for a width of about 1/2 inch (1 cm) to the ends of the adjoining units. The mortar shall be of such thickness that it will be forced out of the joints as the units are placed in position.

1.3.3 Where anchors, bolts, and ties occur within the cells of the units, place metal lath in the joint at the bottom of such cells and fill the cells with mortar or grout as the work progresses. Do not dampen concrete masonry units before or during laying.

1.3.4 All walls shall be constructed using running bond construction.

1.3.5 Masonry unit foundation walls below grade shall be filled solid with grout.

1.3.6 Provide vertical control joints in masonry walls in accordance with locally approved authority having jurisdiction. The location of vertical control joints in masonry shall be clearly shown on construction documents.

1.3.7 Horizontal joint reinforcing may be used in conjunction with reinforcing bars to meet minimum prescriptive reinforcing requirements in lightly loaded walls. Joint reinforcing must not be considered to resist computed stresses.

1.3.8 Where vertical reinforcement occurs, fill cores solid with grout. Lay units in such a manner as to preserve the unobstructed vertical continuity of cores to be filled. Embed the adjacent webs in mortar to prevent leakage of grout. Remove mortar fins protruding from joints before grout is placed. Minimum clear dimensions of vertical cores shall be 2 inches by 3 inches (5 by 7.5 cm). Position reinforcing accurately as indicated. As masonry work progresses, secure vertical reinforcing in place at vertical intervals not to exceed 160 bar diameters. Use puddling rod or vibrator to consolidate the grout. Minimum clear distance between masonry and vertical reinforcement shall be not less than 1/2 inch (12 mm). Unless indicated or specified otherwise, form splices by lapping bars not less than 40 bar diameters and wire tying them together.

1.3.9 Unless indicated otherwise, extend partitions from the floor to the bottom of the floor or roof construction above. Structurally bond or anchor walls and partitions to each other and to concrete walls, beams, and columns to meet all seismic restraint requirements.

1.3.10 Securely anchor nonloadbearing partitions and interior walls to the construction above as indicated and in a manner that provides lateral stability while permitting unrestricted deflection of construction above. Completely embed anchors in mortar joints.

1.4 Unit Masonry Finishing

1.4.1 Coat all exposed masonry surfaces with standard plaster finish smooth and prepared for painting. Plaster to consist of a rough coat of 1:3 cement-coarse sand mortar, body coat of 1:4 cement-sand plaster and a finish coat of cement.

1.5 Storage And Handling

1.5.1 Handle masonry units to avoid chipping and breaking. Deliver cement and lime in unbroken bags, barrels, or other sealed containers. Protect masonry units from contact with the soil and from rain. Keep cement dry. Store and handle cement to prevent inclusion of foreign materials. Store aggregates in a manner to avoid contamination or segregation.

1.6 Bracing And Scaffolding

1.6.1 Provide all bracing and scaffolding necessary for masonry work. Design bracing to resist wind pressure as required by local code.

1.7 Inspection

1.7.1 Inspection for structural masonry shall be performed in accordance with locally approved authority having jurisdiction.

1.8 Field Quality Control

1.8.1 Verify that all materials used for the work conform to the requirements of this specification. Verification shall include:

Certification of load bearing masonry units.
Certification of reinforcing steel bars, trusses, and horizontal joint reinforcing.
Certification of pre-mixed mortar
Witnessing and approval of grout slump tests.
Ensure that all masonry surfaces and joints are level and plumb.
Ensure that no exposed masonry is broken or cracked.
Ensure that all masonry is clean and free from efflorescence.

B1050 STEEL

1.1 General

1.1.1 The design and construction of structural elements or systems constructed partially or wholly of steel products shall be performed in accordance with the locally approved authority having jurisdiction.

1.1.2 The work shall be performed as described herein. The work consists of providing steel structural elements as required to complete the superstructure as required by the construction documents.

1.1.3 The contractor shall provide all plant, labor, and equipment necessary to provide, deliver and place the superstructure ready for painting.

1.2 Structural Steel Materials

1.2.1 Structural steel columns and beams shall have a minimum yield strength of 50 ksi (345 MPa).

1.2.2 Miscellaneous steel shapes and members shall have a minimum yield strength of 36 ksi (248 MPa).

1.2.3 Hollow structural tubes and pipes shall have a minimum yield strength of 42 ksi (290 MPa).

1.2.4 All structural steel exposed to the weather must adequately be protected to prevent corrosion. Structural steel to be galvanized shall be galvanized after fabrication where possible. Repair damage to galvanized coatings with zinc rich paint for galvanizing damaged by handling, transporting, cutting, welding, or bolting.

1.2.5 Steel form decks must be a minimum 0.016 inch (.4mm) thick.

1.2.6 Roof and composite decks must be a minimum 0.035 inch (0.9mm) thick.

1.2.7 Minimum thickness of cold formed steel framing members to be welded shall be 0.06 inch (1.5mm) thick.

1.3 Steel Assembly

1.3.1 Structural steel shall be fabricated in accordance with locally approved authority having jurisdiction with the modifications and additional requirements specified herein, and as indicated on the approved shop drawings. Structural material shall be fabricated and assembled in the shop to the greatest extent possible. Shearing, flame cutting, and chipping shall be done carefully and accurately. Assembled pieces shall be taken apart, if necessary, for the removal of burrs and shavings produced by the reaming operation. Parts shall be secured by bolts, insofar as practicable, to prevent damage in shipment and handling.

1.3.2 The Contractor shall submit complete structural design calculations for the new structure, verified and signed by an engineer registered on the appropriate rolls of the locally approved authority having jurisdiction. The proposed design shall be in accordance with the locally approved authority having jurisdiction, and applicable seismic technical norms. Structural steel frames shall be accurately assembled to the lines and elevations indicated. The various members forming parts of a completed frame or structure after being assembled shall be aligned and adjusted accurately before being fastened. Fastening of splices of compression members shall be done after the abutting surfaces have been brought completely into contact. Bearing surfaces and surfaces that will be in permanent contact shall be cleaned before the members are assembled.

1.3.3 Any single panel point of the lower chord of exposed roof joists or trusses or any point along the length of exposed primary structural members supporting roofs over manufacturing, storage, and warehousing, or maintenance shops must be capable of safely supporting a suspended concentrated load of 2 klbf (8.9 kN) in addition to dead loads. For all other occupancies, a concentrated load of 200 lbf (0.89 kN) must be used instead of 2 klbf (8.9 kN).

1.3.4 Splices will be permitted only as indicated by the Engineer of Record. All erection bolts used in welded construction may be tightened securely and left in place; if erection bolts are removed, the holes shall be filled with plug welds. Bracing, adequacy of temporary connections, alignment, and the removal of paint on surfaces adjacent to field welds shall be in accordance with the locally approved authority having jurisdiction. Field connections, high-strength bolted construction-assembly, and welded construction shall be as hereinbefore specified. Welding for redrilling will not be permitted. Holes shall not be enlarged more than 1/8 inch (2 mm) greater than the specified hole size without approval of the Engineer of Record.

1.4 Connections

1.4.1 Provide anchor bolts, chemical fasteners or other connections, between the structural steel and concrete. Anchor bolts and anchors shall be correctly located and built into connecting work. Bolts and anchors shall be preset by the use of templates or other methods as may be required to locate the anchor bolts and other connections accurately. Chemical fasteners shall be installed in accordance with manufacturer’s instructions reported in the technical catalogue.

1.4.2 All connections shall be designed using a minimum safety factor of 2.0 with no increase in allowable working stresses. Shop connections shall be welded unless otherwise indicated. Field connections shall be bolted, except where welded connections are indicated. Bolts shall be driven

accurately into the holes without damaging the thread. Bolt heads shall be protected from damage during driving. Bolt heads and nuts shall rest squarely against the metal. Submit complete structural design calculations for all connections, verified and signed by an engineer registered in the country and locality where the project is located. The procedures for the welding method employed, the appearance and quality of welds made, the qualification of welders, and the methods used in correcting welding work shall be in accordance with the locally approved authority having jurisdiction.

1.4.3 All cold formed steel framed walls must be anchored to foundations with galvanized anchors as needed to resist design forces.

1.4.4 Anchors for framed exterior walls, framed interior load bearing walls, and framed shear walls shall not be less than 1/2 inch (12.7 mm) diameter embedded anchor bolts, expansion bolts, or adhesive anchor system with 4 inch (100mm) embedment spaced a maximum 48 inches (120 cm) on center.

1.4.5 Anchors for framed interior non-bearing, non shear wall partitions shall not be less than 1/2 inch (12mm) diameter embedded anchor bolts, expansion anchors, or adhesive anchor systems with 4 inch (100mm) diameter powder actuated fasteners spaced at 610mm on center.

1.4.6 Cold formed steel members must be connected with screw fasteners or by welding. The use of pneumatic nailing is not permitted.

1.5 Painting

1.5.1 Shop prime paint all steelwork, except surfaces of steel to be encased in concrete, surfaces to be welded, or contact surfaces to be bolt connected.

1.5.2 After inspection and approval, and before leaving the shop, all steelwork specified to be painted shall be cleaned before application of the shop coat of paint.

1.5.3 Heavy rust shall be removed. Oil, grease and similar contaminants shall be removed. Steel surfaces, unless otherwise specified hereinafter, shall be given one shop coat of rust-inhibiting primer.

1.5.4 Paint shall be applied thoroughly and evenly to dry, clean surfaces by brushing, dipping, or other approved method to provide a continuous minimum thickness of 0.0016 inch (0.040 mm) for the prime coat.

1.5.5 All bare metal, structural steel members, steel plates, welded connections and other metal components assembled or fabricated in the field, whether or not exposed to view, shall receive one coat of rust inhibiting primer coat and two enamel coats, as indicated by the Designer of Record.

1.5.6 Steel members affected by welding operation shall be brushed clean to bare metal and provided with field coating as specified above.

Surfaces to receive sprayed-on fireproofing shall be cleaned and prepared in accordance with the fireproofing manufacturer's recommendations.

-- End of Section –

SECTION B20: EXTERIOR ENCLOSURE [04/07]

B20 GENERAL

1.1. Design Submittal

1.1.1 Provide the design and installation in accordance with Section 6 General Work Requirements.

1.2. Construction Submittals

1.2.1 The Contractor shall provide all plant, labor, material, and equipment necessary to provide, deliver and place exterior walls to form exterior enclosure as specified herein.

B2010 EXTERIOR WALLS

1.1 Exterior wall construction shall consist of a non-structural plaster exterior skin with a unit masonry back-up wall and a non-structural plaster interior skin to provide a protective finish on the inside face of exterior walls.

1.2 Exterior wall construction shall be used for exterior enclosure, balcony walls and on-site screen walls.

B201001 Unit Masonry

1.1 Masonry units shall be cements block, fired clay block or fired brick.
1.2 Masonry units used on exterior walls shall be 8 inch (20 cm) thick.
1.3 The Contractor shall provide #4 (13 mm) steel reinforcement bars within the masonry walls at 32 inch (812 mm) intervals horizontally. These bars shall run vertically from the perimeter grade beam to the top ring beam, and all cells which the bars pass through shall be filled solid with concrete or grout. Bars may be spliced to facilitate installation. Additionally for every 2nd masonry course vertically the Contractor shall provide horizontal reinforcement embedded in the mortar of the horizontal joints, run continuously from column to column. This may be 2 - #2 (6mm) wires or truss or ladder reinforcing manufactured for this purpose. Any variation from these reinforcing requirements must be approved by the Contracting Officer or COR prior to material purchase.
1.4 Coat all exposed masonry surfaces with standard plaster finish smooth and prepared for painting. Plaster to consist of a rough coat of 1:3 cement-coarse sand mortar, body coat of 1:4 cement-sand plaster and a finish coat of cement.

B201002 Guardrails And Handrails

1.1 Design guardrails to resist uniform loads of 50 #/lf (7 kg/m) or a point load of 200# (91kg). Design anchorage connections to resist total load acting on the connection.
1.2 Toprail, intermediate rail and post material to be 1.5 inch (4 cm) diameter. Provide series 300 stainless steel pipe collars.
1.3 Design guardrail system so that there is no opening large enough for a 4 inch (10 cm) sphere to pass through.
1.4 Steel guardrails shall be hot-dip galvanized, shop primed shop painted for exterior applications. Factory coat all metal railings, except ornamental metals such as brass, bronze, stainless steel and nickel-silver, with a high performance coating with a minimum coating thickness of 1.2 mils (.03 mm).
1.5 Wood guardrails shall be of pre-finished natural hardwood in oak, walnut, or ash. Wood shall be coated with hard acrylic finish to withstand indentations.

B201003 Exterior Painting And Special Coatings

1.1 Painting practices shall comply with sound application and handling practices, and shall conform to the latest revision/edition of applicable codes, ordinances and regulations of the Republic of Kenya governing life/safety, fire protection and construction, in effect during this contract, except where specifically stated herein. Any material installed that does not meet the requirements of this Performance Technical Specification (PTS) and/or applicable codes, ordinances and regulations will be removed and reinstalled at Contractor's expense.
1.2 Remove dirt, splinters, loose particles, grease, oil, and other foreign matter and substances deleterious to coating performance as specified for each substrate before application of paint or surface treatments. Oil and grease shall be removed prior to mechanical cleaning. Cleaning shall be programmed so that dust and other contaminants will not fall on wet, newly painted surfaces. Exposed ferrous metals such as nail heads on or in contact with surfaces to be painted with water-thinned paints, shall be spot-primed with a suitable corrosion-inhibitive primer capable of preventing flash rusting and compatible with the coating specified for the adjacent areas.
1.3 The surfaces of wood doors, windows, frames and trim shall receive three coats of pigmented alkyd enamel paint. Apply one coat to all surfaces of wood prior to installation and two coats to exposed surfaces after installation. Prior to applying second coat spot touch-up first coat where wood is left uncoated due to cutting, drilling or other damage as a result of installation work.

B2020 EXTERIOR WINDOWS

1.1 Standard windows shall be in compliance with local Building Codes.
1.2 Windows shall be provided with sills on the exterior and stools on the interior of the opening. Sills shall be special shape or cut unit masonry or precast concrete. Positively slope sills away from windows. Window stools shall be slate or solid polymer.
1.3 Exterior windows shall consist of operable sash used singly and in multiples. Include operating hardware, non-corroding framed metal screens and security grilles. Provide jamb support for larger windows where recommended by manufacturer.

B202001 Standard Window Systems

1.1 Steel Windows shall be solid hot-rolled steel shape welded frames and mullions. Provide chemically cleaned and primed galvanized frames ready for field applied final paint finish. Provide glazing beads and tapes, steel framed screens with aluminum mesh, hardware, locks, and clear glazing.
1.2 Aluminum Windows shall be manufacturer's standard extruded shapes, welded frames and mullions. Exposed aluminum surfaces shall be factory finished with an architectural anodized coating or a high-performance organic coating. Coating shall have a total dry film thickness of 1.2 mils (.03 mm). Provide glazing beads and tapes, aluminum framed screens with aluminum or vinyl mesh, hardware, locks, and clear glazing.
1.3 Plastic Windows shall be integral colored or co-extruded color PVC, welded and reinforced corners with reinforcing members. Provide glazing beads and tapes, aluminum framed screens with aluminum or vinyl mesh, hardware, locks, welded sill, anchors, and clear glazing.
1.4 Wood Windows shall consist of standard milled shapes. All surfaces (exposed and concealed) shall be factory primed with a standard wood primer coating. Exposed surfaces shall be field finished with a high-performance organic coating. Wood Windows shall consist of complete units including frame, sash, glazing beads and tapes, glass, aluminum framed screens with aluminum or vinyl mesh, hardware, locks, and clear glazing.
1.5 Glazing to be minimum 1/8 inch (3 mm) clear, tempered glass. Provide thicker glazing if required by the manufacturer for the given application.

B202002 Louvered Windows

1.1 Provide louvers for window or vent openings as shown. Provide aluminum framed screens with aluminum or vinyl mesh, hardware, and anchors.

B202003 Screens

1.1 Screens for windows shall be standard aluminum or reinforced vinyl mesh insect screen fabric with aluminum screen frames.

B202004 Roll Shutters

1.1 Roll shutters shall be factory finished, aluminum slats with continuous over-head housing, frame and tracks. Roll shutter shall be capable of being locked in a closed position by a non-key device.

B202005 Exterior Wall Vents

1.1 Provide open block for vent openings as required. Provide aluminum framed screens with aluminum or vinyl mesh over block opennings, hardware, and anchors.

B2030 EXTERIOR DOORS

1.1 Exterior doors shall be standard duty hollow steel doors and frames. Door frames shall have welded corners. Knockdown door frames are not permitted.
1.2 See Section B203004, EXTERIOR DOOR HARDWARE, for door hardware requirements.
1.3 Doors shall be hung true and plumb.
1.4 Factory apply commercial quality primer to six sides of wood doors.
1.5 Factory apply commercial quality galvanized (zinc) finish to six sides of metal doors.

B203001 Standard Doors Systems

1.1 Hollow metal (steel) doors shall be manufacturer's standard duty hollow metal door, prepared for installation of hardware. Field paint metal door per paragraph B201003 EXTERIOR PAINTING AND SPECIAL COATINGS over factory applied primer over galvanized finish.
1.2 Wood stile and rail doors shall be manufacturer's heavy duty quality, constructed with solid, premium or custom grade lumber. Solid exterior wood doors are only allowed where facility design, overhangs and porches eliminate direct rain/moisture contact from wind driven rain. Wood doors shall be factory primed with a wood sealer coating six sides. Manufacturer's primer and field painting shall be compatible with finish system in the paragraph B201003 EXTERIOR PAINTING AND SPECIAL COATINGS.
1.3 Flush wood doors shall be manufacturer's heavy duty quality, constructed with solid, premium or custom grade lumber. Solid exterior wood doors are only allowed where facility design, overhangs and porches eliminate direct rain/moisture contact from wind driven rain. Wood doors shall be factory primed with a wood sealer coating six sides. Manufacturer's primer and field painting shall be

compatible with finish system in the paragraph B201003 EXTERIOR PAINTING AND SPECIAL COATINGS.

B203002 Door Frames

1.1 Form standard steel frames with welded corners for installation in exterior walls. Form stops and beads of 20 gage steel.
1.2 Anchor all metal frames with a minimum of three jamb anchors and base steel anchors per frame jamb, zinc-coated or painted with rust-inhibitive paint, not lighter than 18 gage. Mortar infill frames.
1.3 Anchor all wood frames with a minimum of three sets of 3 inch (8 cm) finish nails with frame shims at each anchor point.
1.4 Form standard wood frames from similar species to wood doors for installation in exterior walls. Form stops as one piece with jamb rails.

B203003 Exterior Door Hardware

1.1 Size hinges to match door size, but in no case less than 4 1/2 x 4 1/2 inches (11 cm x 11 cm), with anti-friction bearing hinges. Use two hinges for doors 60 inches (1.5 m) or less in height and one additional hinge for each additional 30 inches (.75 m), or fraction thereof, in door height.
1.2 Locks and latches shall be commercial grade.
1.3 Furnish three keys for each lock set.
1.4 Lock trim shall be commercial grade cast, forged or heavy wrought construction.
1.5 Knobs and roses shall be commercial grade.
1.6 Provide top and bottom rain drips for all exterior doors that open to the outside, where the door swing area is not covered by an overhang.
1.7 Provide door louvers as required for ventilation. Louvers shall be of the manufacturer's standard design and shall transmit a minimum of 35 percent free air. Louver shall be stationary, sight-proof type, and have insect screens.

B203004 Exterior Door Hardware Finishes

1.1 Provide door hardware with one of the following finish systems to match the interior door hardware:

1.1.1 Satin stainless steel finish,

1.1.2 Satin chromium plated finish over brass or bronze, except hinges which shall be satin stainless steel.

1.1.3 Hardware for aluminum doors shall be finished to match the doors.

1.1.4 Satin bronze finish, except hinges which shall be satin bronze plated finish.

B203005 Other Exterior Specialty Doors

1.1 Provide other exterior specialty doors where required. Provide special function exterior doors and gates and assemblies required for the proper operation and functioning of the facility. Exterior doors system may include factory-finished or painted doors and frames.
- End of Section –

SECTION B30: ROOFING [04/07]

B30 GENERAL

1.1. Design Submittal

1.1.1 Provide the design and installation in accordance with Section 6 General Work Requirements.

1.2. Construction Submittals

1.2.1 The Contractor shall provide all plant, labor, material, and equipment necessary to provide, deliver and place a complete leak-free roof system as specified herein.

B3010 STEEP SLOPE ROOF SYSTEMS

1.1 Roof systems with a slope greater than 2:12 are to be considered a steep slope roof system.
1.2 Slope conversions from low slope to steep slope roofing systems must specifically address temporary waterproofing protection where new framing connections penetrate the existing low slope system.

B301002 Roof Tiles

1.1 Provide a complete roof system consisting of tile roofing, support purlins and fasteners as recommended and required by the roofing manufacturer. Roofing design shall meet deflection requirements per building code.
1.2 Clay tile shall be machine-formed natural clay tiles, kiln-fired to vitrification and free from surface imperfections. Provide specially shaped units as required to provide watertight installation and closure. Form fastening holes prior to firing.
1.3 Concrete tile shall be molded or extruded, interlocking concrete roofing tile units, and specially shaped as required to provide a watertight installation and closure. Provide with cast-in anchor lugs, transverse weather checks and fastening holes.
1.4 Sheet metal flashing and trim shall be fabricated of 20 oz. Copper, lead-coated copper or stainless steel.
1.5 Mortar set tile.

B301003 Metal Roof Panels

1.1 Provide a complete roof system consisting of metal roof panels, support purlins, closure strips and fasteners as recommended and required by the roofing manufacturer. Roofing design shall meet deflection requirements per building code.
1.2 Metal roofing panels shall be aluminum-zinc coated steel or aluminum corrugated panels formed at the manufacturing plant. Panel thickness shall be 22 gauge. The minimum gauge for aluminum panels shall be 20-gauge or greater. Roofing design shall meet deflection requirements per building code.
1.3 Treat exposed cut edges with coating compatible with the factory applied aluminum-zinc coating for corrosion protection.
1.4 Roofing system shall be designed to obtain a wind uplift resistance appropriate for wind conditions experienced at the construction site.
1.5 Provide other sheet metal flashings, trim moldings, closure strips, caps and other preformed metal panel accessories, of the same material, thickness and finish as roofing panels. Provide molded closure strips of closed-cell or solid-cell synthetic rubber, neoprene, or polyvinyl chloride premolded to match configurations of preformed metal panels.
1.6 Provide concealed fasteners for attaching panels to structural supports and to adjoining panels as approved and in accordance with printed manufacturer's recommendations.

B301004 Concrete Roof Panels

1.1 Provide a complete roof system consisting of corrugated fiber-reinforced concrete panels, support purlins and fasteners as recommended and required by the roofing manufacturer. Roofing design shall meet deflection requirements per building code.
1.2 Provide support strips under roofing panels at bearing/fastening points. Support strips shall have one surface shaped to match corrugations of roofing panels.
1.3 Roofing system shall be designed to obtain a wind uplift resistance appropriate for wind conditions experienced at the construction site.
1.4 Place roofing panels with a 4 inch (10 cm) side lap and a 6 inch (15 cm) end lap. Lap to create a shingling effect between panels to direct water downward toward eve edges.
1.5 Provide corrosion resistant fasteners that will securely attach roofing panels to sub-surface framing without chemically reacting with or physically damaging the roofing panels or framing members.
1.6 Place fasteners in top of corrugation ridges away from water path.
1.7 Place fasteners so that the primary connection to the structure is along the top edge of the panel which will be covered by the next lapped roofing panel.
1.8 Place fasteners at intermediate support to allow panels to resist strong winds. Minimize fasteners in exposed areas of roof panels to reduce leak points.

B3020 Low Slope Roof Systems

1.1 Roof systems with a slope of 2:12 or less are to be considered a low slope roof system.
1.2 Slope conversions from low slope to steep slope roofing systems must specifically address temporary waterproofing protection where new framing connections penetrate the existing low slope system.

1.3 Roofing system shall be designed to obtain a wind uplift resistance appropriate for wind conditions experienced at the construction site.

B302001 Built-Up Asphalt Roofing (Aggregate Surfaced)

1.1 Provide a complete built-up roof system consisting of glass felt, asphalt bitumen, and aggregate surfaced or modified bitumen cap sheet, support, flashings and fasteners as recommended and required by the roofing manufacturer. Roofing design shall meet deflection requirements per building code.
1.2 Standard roofing asphalt
1.3 Felt Base Sheet shall be un-perforated asphalt-saturated felts, No. 30 or heavier.
1.4 Ply Felt shall be un-perforated asphalt-saturated felts, No. 30 or heavier.
1.5 Ventilating Base Sheet shall be un-perforated asphalt-saturated felts, No. 30 or heavier.
1.6 Flashing Felt shall be SBS Modified Base Sheet, with combined polyester and glass fiber reinforcing, and a thickness of 130 mils.
1.7 SBS Bitumen Cap Sheet with combined polyester and glass fiber reinforcing, and a thickness of 130 mils.
1.8 Utilize primer as required by roofing manufacturer.
1.9 Asphalt Roof Cement as required by roofing manufacturer.
1.10 Aggregate as recommended by roofing manufacturer.
1.11 Provide metal fasteners of copper, aluminum or stainless steel, compatible with materials to be penetrated. Fasteners shall be of sufficient length to achieve appropriate embedment or penetration into the substrate below.
1.12 Metal flat discs or caps of zinc-coated steel not less than 28 gage and not less than 35 mm (1 3/8 inches) in diameter.
1.13 Traffic Pads shall be preformed reprocessed rubber, compatible with the roof membrane, 1/4 inch (6.35 mm) minimum thickness, to protect roof from foot traffic.

B3030 FLASHINGS & TRIM

B303001 Flashing And Sheet Metal

1.1 This paragraph covers the requirements for flashing and sheet metal work including scuppers, and splash pans. Flashing and sheet metal shall be provided in accordance with roof manufacturer's printed installation instructions.
1.2 Materials
Furnish sheet metal items in 2.44 to 3.05 meter (8 to 10 foot) lengths. Sheet metal items include the following: gutters, including hangers; downspouts; counter-flashings; gravel stops and fascias; cap, valley, stepped, base and eave flashings and related accessories. Materials to include:

1.2.1 Copper, Sheet and Strip - cold-rolled temper.

1.2.2 Lead-Coated Copper Sheet

1.2.3 Lead Sheet - Minimum weight 4 pounds per square foot (.19 kPa).

1.2.4 Steel Sheet, Zinc-Coated (Galvanized) - Galvanized steel items shall have a baked-on, factory applied finish of polyvinylidene fluoride or an equivalent fluorocarbon coating with a minimum thickness of 0.8 to 1.3 mils.

1.2.5 Stainless Steel - Type 302 or 304, 2D finish, fully annealed, dead-soft temper.

1.2.6 Aluminum Alloy Sheet and Plate

1.2.7 Aluminum alloy, Extruded Bars, Rods, Shapes, and Tubes

1.2.8 Solder – Standard Lead-Zinc Solder

1.2.9 Asphalt Primer

1.2.10 Fasteners - Fasteners shall be of the same or compatible metal with the item being fastened. Stainless steel fasteners shall be used to fasten dissimilar materials.

B301002 Gutters And Downspouts

1.1 Provide gutters and downspouts compatible with roofing material and finish. Concealed (interior) gutters and downspouts are prohibited. The primary and secondary drainage systems shall be sized per applicable Plumbing and Building Codes. Gutters and downspouts shall be zinc-coated, galvanized steel.

B301003 Roof Openings And Supports

1.1 Provide flashings for roof openings and supports specified below:
1.2 When existing pitch pans cannot be avoided and must be utilized, insure pitch pan is a preformed pan with minimum 4-inch (100 mm) height and 2-inch (50 mm) flange with 2-inch (50 mm) clearance on all sides of the penetration. Fill bottom 1/3 with non-shrink grout. Fill remainder with pourable elastomeric sealer sloped to drain. For round penetrations, provide a metal umbrella cap clamped to the penetration.
1.3 Assure all penetration flashings extend minimum 8 inches (200 mm) above the finished roof surface.

-- End of Section –-

SECTION C10: INTERIOR CONSTRUCTION [06/07]

C10 GENERAL

1.1. Design Submittal

1.1.1 Provide the design and installation in accordance with Section 6 General Work Requirements.

1.2. Construction Submittals

1.2.1 The Contractor shall provide all plant, labor, material, and equipment necessary to provide, deliver and place exterior walls to form interior construction as specified herein.

C1010 PARTITIONS

1.1 Partition wall construction shall consist of a unit masonry back-up wall with non-structural plaster skin on each face of the wall to provide a protective finish.
1.2 Partition wall construction shall be used for full and partial height interior walls.

C101001 Unit Masonry

1.1 Masonry units shall be cements block made of lightweight or normal weight aggregate, fired clay block or fired brick.
1.2 Masonry units used on interior walls shall be 8 inch (10 cm) thick.
1.3 Coat all exposed masonry surfaces with standard plaster finish smooth and prepared for painting. Plaster to consist of a rough coat of 1:3 cement-coarse sand mortar, body coat of 1:4 cement-sand plaster and a finish coat of cement.
1.4 Provide #4 (1/2 inch) (13 mm) reinforcing bars and horizontal joint reinforcement in masonry walls at the following minimums:

1.4.1 In structural walls: 24 inches (60 cm) vertical and 48 inches (120 cm).

1.4.2 In non-structural walls at 48 inches (120 cm) vertical and 80 inches (200 cm)

1.4.3 The contractor shall provide additional seismic reinforcement as required for the project.

C101002 Handrails

1.1 Design guardrails to resist uniform loads of 50 #/lf (7 kg/m) or a point load of 200# (91kg). Design anchorage connections to resist total load acting on the connection.
1.2 Toprail, intermediate rail and post material to be 1.5 inch (4 cm) diameter. Provide series 300 stainless steel pipe collars.
1.3 Design guardrail system so that there is no opening large enough for a 4 inch (10 cm) sphere to pass through.
1.4 Steel guardrails shall be hot-dip galvanized, shop primed shop painted for exterior applications. Factory coat all metal railings, except ornamental metals such as brass, bronze, stainless steel and nickel-silver, with a high performance coating with a minimum coating thickness of 1.2 mils (.03 mm).
1.5 Wood guardrails shall be of pre-finished natural hardwood in oak, walnut, or ash. Wood shall be coated with hard acrylic finish to withstand indentations.

C101003 Interior Painting And Special Coatings

1.1 Provide and apply interior painting and special coatings in accordance with Section C3040, INTERIOR PAINTING AND SPECIAL FINISHES (of C30 INTERIOR FINISHES).

C1040 INTERIOR DOORS

1.1 Interior doors shall be standard duty hollow steel doors and frames. Door frames shall have welded corners. Knockdown door frames are not permitted.
1.2 See Section C103004, INTERIOR DOOR HARDWARE, for door hardware requirements.
1.3 Doors shall be hung true and plumb.
1.4 Factory apply commercial quality wood primer to six sides of wood doors that are to receive a painted finish.
1.5 Factory apply commercial quality wood sealer to six sides of wood doors that are to receive a clear finish.
1.6 Factory apply commercial quality galvanized (zinc) finish to six sides of metal doors.
1.7 Maximum door undercut shall not exceed 3/4 inch (19 mm).

C104001 Standard Doors Systems

1.1 Hollow metal (steel) doors shall be manufacturer's standard duty hollow metal door, prepared for installation of hardware. Field paint metal door per paragraph C101003 "Interior Painting And Special Coatings" over factory applied primer over galvanized finish.
1.2 Wood stile and rail doors shall be manufacturer's heavy duty quality, constructed with solid, premium or custom grade lumber. Solid exterior wood doors are only allowed where facility design, overhangs and porches eliminate direct rain/moisture contact from wind driven rain. Wood doors shall be factory primed with a wood sealer coating six sides. Manufacturer's primer and field painting shall be compatible with finish system in the paragraph C101003 "Interior Painting And Special Coatings".
1.3 Flush wood doors shall be manufacturer's heavy duty quality, constructed with solid, premium or custom grade lumber. Solid exterior wood doors are only allowed where facility design, overhangs and porches eliminate direct rain/moisture contact from wind driven rain. Wood doors shall be factory primed with a wood sealer coating six sides. Manufacturer's primer and field painting shall be compatible with finish system in the paragraph C101003 "Interior Painting And Special Coatings".

C104002 Door Frames

1.1 Form standard steel frames with welded corners for installation in interior masonry walls. Form stops and beads of 20 gage steel.
1.2 Anchor all metal frames with a minimum of three jamb anchors and base steel anchors per frame jamb, zinc-coated or painted with rust-inhibitive paint, not lighter than 18 gage. Mortar infill frames.
1.3 Form standard wood frames from similar species to wood doors for installation in interior masonry walls. Form stops as one piece with jamb rails.
1.4 Anchor all wood frames with a minimum of three sets of 3 inch (8 cm) finish nails with frame shims at each anchor point.

C104003 Interior Door Hardware

1.1 Size hinges to match door size, but in no case less than 4 1/2 x 4 1/2 inches (11 cm x 11 cm), with anti-friction bearing hinges. Use two hinges for doors 60 inches (1.5 m) or less in height and one additional hinge for each additional 30 inches (.75 m), or fraction thereof, in door height.
1.2 Locks and latches shall be commercial grade.
1.3 Furnish three keys for each lock set.
1.4 Lock trim shall be commercial grade cast, forged or heavy wrought construction.
1.5 Knobs and roses shall be commercial grade.
1.6 Provide top and bottom rain drips for all exterior doors that open to the outside, where the door swing area is not covered by an overhang.
1.7 Provide door louvers as required for ventilation. Louvers shall be of the manufacturer's standard design and shall transmit a minimum of 35 percent free air. Louver shall be stationary, sight-proof type. Metal louver frames shall be 20-gage steel with louver blades minimum 24 gage.
1.8 Provide mop plates on all doors in rooms that have a mop-able floor finish.

C104004 Interior Door Hardware Finishes

1.1 Provide door hardware with one of the following finish systems to match the exterior door hardware:

1.1.1 Satin stainless steel finish.

1.1.2 Satin chromium plated finish over brass or bronze, except hinges which shall be satin stainless steel.

1.1.3 Hardware for aluminum doors shall be finished to match the doors.

1.1.4 Satin bronze finish, except hinges which shall be satin bronze plated finish.

C104005 Other Interior Specialty Doors

1.1 Provide other interior specialty doors where required. Provide special function interior doors and gates and assemblies required for the proper operation and functioning of the facility. Interior doors system may include factory-finished or painted doors and frames.

- End of Section –

SECTION C20: STAIRS [8/06]

C20 GENERAL

1.1. Design Submittal

1.1.1 Provide the design and installation in accordance with Section 6 General Work Requirements.

1.2. Construction Submittals

1.2.1 The Contractor shall provide all plant, labor, material, and equipment necessary to provide, deliver and place all required stairs.

C2010 STAIR CONSTRUCTION

C201001 Interior And Exterior Stairs

1.1 Provide cast-in-place concrete stairs as required. Design load shall not be less than 4.8 kPa (100 PSF) for live load, and 136 kg (300 pounds) for concentrated loads. Provide interior or exterior concrete steps and stair with non-slip finish. Provide steel guard and handrails as necessary.

C201002 Stair Handrails, Guardrails, And Accessories

1.1 Design handrails in accordance with the local regulations. Provide the same size rail and post. Factory coat all metal railings (except for ornamental metals such as brass, bronze, stainless steel, and nickel-silver) with a high performance coating, with a minimum coating thickness of 1.2 mils unless otherwise noted.

1.1.1 Provide 1.5 inch (38 mm) diameter steel handrails, including inserts in concrete, steel pipe or structural tubing. Railings shall be hot-dip galvanized and shop painted for exterior applications and primed and shop painted for interior applications.

1.1.2 Provide 1.5 inch (38 mm) diameter aluminum pipe railing. Railings shall be coated with a high performance coating or anodized.

1.1.3 Provide 1.5 inch (38 mm) diameter ornamental railings. Provide anchorage and fasteners as recommended by the product manufacturer.

1.1.4 Provide 1.5 inch (38 mm) diameter wood handrails. Provide wood handrails of pre-finished natural hardwood. Wood shall be coated with hard acrylic finish to withstand indentations.

-- End of Section --

SECTION C30: INTERIOR FINISHES [04/07]

C30 GENERAL

1.1. Design Submittal

1.1.1 Provide the design and installation in accordance with Section Z10 General Performance Technical Specification.

1.2. Construction Submittals

1.2.1 The Contractor shall provide all plant, labor, material, and equipment necessary to provide, deliver and place interior finishes to form exterior enclosure as specified herein.

C3010 WALL FINISHES

1.1 Interior wall finishes shall be moisture and mildew resistant, easily maintained, and suitable in accordance with industry standards for the architectural surface being finished. For painted wall finishes, refer to C3040 “INTERIOR PAINTING AND SPECIAL COATINGS”.

C301001 Plaster Wall Finishes

1.1 Veneer plaster shall be cement plaster veneer finish on concrete or masonry. Refer to Section C3040 for paint system.
1.2 Portland cement plaster base coat, gray portland cement.
1.3 Portland cement plaster finish coat, gray portland cement. Factory-mixed finish coat according to the manufacturer’s instructions.

C3020 FLOOR FINISHES

Refer to C3040 “INTERIOR PAINTING AND SPECIAL FINISHES” for painted floor coatings.
1.2 Provide tile floor systems as required in moist and clean locations such as toilets, kitchens, laboratories, etc. Install tile systems in accordance with manufacturer’s instructions. Coordinate with ceramic accessories for modularity. Include all trim pieces, caps, stops, and returns to complete installation.
1.3 Provide samples of tile manufacturer’s full range of colors and styles to COR for selection. Tile shall be a minimum of one grade above manufacturer’s base grade.
1.4 Colored grout for tile floor system shall be factory sanded Portland cement, Latex-portland cement, or Epoxy. Provide tile joint grout sealer on white, light colored areas that are routinely exposed to water and liquid cleaning materials, entrance areas, and areas that require a high degree of stain resistance, and as required by the manufacturer. Provide chemical resistant epoxy resin for kitchens and other areas where high resistance to staining and absorption are required.
1.5 Mortar for tile floor system shall be Portland cement, Latex-portland cement, or Epoxy.
1.6 Floor tile is to be matt finished, non-slip, fired clay mosaic tile flooring.
1.7 Tile shall be placed in a mortar bed. Grout tile joints once tiles are placed and grout bed has dried.
1.8 Slope tile floors to drains or to exterior room doors.

C302001 Ceramic Tile Floor Systems

1.1 Ceramic Mosaic Wall Tile shall be a minimum of 1/4 inch (6mm) thick and installed from floor to ceiling, unless otherwise noted.
1.2 Floor tile shall be glazed, matte glazed or unglazed finish.
1.3 Porcelain wall tile shall be through color, polished or unpolished. Refer to project program for tile type, pattern, and surface texture. Install from floor to ceiling, unless otherwise noted.
1.4 Provide Designer accent tile, accent strips and accessory ceramic tile shapes as an integral part of the ceramic wall tile system.

C302002 Ceramic Glazed Tile Floor

1.1 Ceramic glazed floor tiles shall be a minimum of 5/16 inch (8mm) thick with a minimum of 1/8 inch (3mm) grout width with cushioned edge. Tile shall have a 0.5 to 3.0 percent water absorption rate. Do not use in areas where there is excessive water or grease and oils such as kitchens, dining facilities, toilets, showers, shower drying rooms, building entrance areas, and in industrial and maintenance facilities.

C302003 Ceramic Mosaic Unglazed Floor Tiles

1.1 Ceramic Mosaic unglazed floor tiles shall be a minimum of 1/4 inch (6mm) thick with a maximum of 1/16 inch (1.6mm) grout width with cushioned edge. Tile shall have less than a 0.5 percent water absorption rate. Use in toilets, showers and shower drying rooms and locker rooms.

C302004 Porcelain Floor Tile

1.1 Porcelain floor tiles shall be a minimum of 5/16 inch (8mm) thick with a maximum of 1/4 inch (6mm) grout width with cushioned edge. Tile shall have a minimum breaking strength of 300 pounds (136kg) and a maximum absorption rate of 0.5%. Use in lobbies, corridors, toilets, kitchens, dining facilities, and other areas with minimal maintenance requirements, high resistance to staining, absorption and high durability requirements. Tile shall be color through, impervious, unglazed or glazed finish with an unpolished, semi-polished, polished, or textured surface.

C302005 Quarry Floor Tile

1.1 Quarry floor tiles shall be a minimum of 1/2 inch (12.7mm) thick tiles with a maximum of 1/4 inch (6mm) grout width. Tile shall have a minimum breaking strength of 350 pounds (158kg) and a maximum absorption rate of 3%. Use in lobbies, corridors, kitchens, dining facilities, and other areas with high durability requirements. Use grout release for darker pigmented grout colors. Tile shall have a maximum of 3.0 percent water absorption rate. Non-slip, abrasive grain or textured surface required for tile in areas where there is excessive water or grease and oils. Tile shall consist of semi-vitreous, vitreous or clay material with smooth or textured surface and unglazed finish.

C302006 Terrazzo Floor Finishes

1.1 Provide terrazzo, bonded to concrete, consisting of a terrazzo topping over an underbed. Use in all general areas requiring terrazzo. Where structural movement is anticipated which may injure the terrazzo, use the sand cushion (floating) method.

1.2 Resinous terrazzo flooring shall be an epoxy terrazzo system.

C302007 Masonry And Stone Flooring

1.1 Unit masonry flooring system and coordinating base shall be fired red clay brick, or chemical resistant brick unit masonry flooring.

1.2 Natural Stone Flooring and coordinating base shall be of marble, granite, or travertine.

1.3 Aggregate Stone Tile and coordinating base shall be a composite of marble or granite.

1.4 Install stone floor and base in accordance standard practices and with the recommendations of the supplier applicable to the type of stone being installed.

C302008 Wall Base Finishes

1.1 Wall base for transition between floor and wall shall coordinate with the adjacent flooring for color, material match and modularity.

1.2 Stone and marble wall base shall coordinate with the adjacent flooring for color, material match and modularity and shall be 4 inch (89 mm) and 3/4 inch (19 mm) thick.

1.3 Tile base shall coordinate with the adjacent ceramic wall and floor tile for color, material match and modularity. Include all pre-manufactured trim pieces, special shapes, caps, stops, and returns to provide a complete installation.

C302008 Stair Finishes

1.1 Finishes for stair treads shall coordinate with the adjacent wall and floor finishes for color, material match and modularity. (Refer to C302001 through C302007.) Provide treads with textured, slip resistant, surfaces or raised patterns and visually impaired nosing inserts as required.

C302009 Hardeners And Sealers

1.1 Harden and seal concrete floors in accordance with the finished floor manufacture requirements. Utilize other methods of concrete curing if the floor finish manufacturer does not recommend a chemical hardener or sealer. Concrete floors that can utilize a hardener-sealer and will be exposed to traffic shall receive a minimum of two coats of hardener-sealer curing agent for dust protection. These

hardener-sealer-cured floors shall be finished with a curing agent that shall penetrate the concrete to permanently seal the floor against moisture and the penetration of contaminants. The curing agent shall be non-toxic, non-flammable, and non-combustible and shall be installed in accordance with the manufacturer's printed instructions. The finished floor shall be dust-free.
1.2 Colored concrete floors shall include a colored pigment either applied as a topical dye; or a concrete topping with integral color pigment; or a dry shake pigment application, as required by the project program. Concrete floor shall be trowel applied in a pattern, or shall include grit for slip resistance.

C3030 CEILING FINISHES

1.1 Refer to C3040 "Interior Painting And Special Coatings" for painted ceiling finishes.

C303001 Acoustical Ceiling Tiles And Panels

1.1 All acoustical ceiling panels shall be 24 inch by 48 inch (610 mm by 1220 mm), with a minimum light reflectance of .75 (except as noted), flame spread resistant and smoke development resistant. All acoustical ceiling panels shall have minimum 60% recycled content. Provide square edge except as noted.

1.1.1 For typical open office areas, conference rooms, classrooms, provide non-asbestos mineral composition acoustical ceiling panels with factory-applied standard washable painted finish or with factory-applied plastic membrane-faced vinyl. Provide square edge in all locations to receive acoustical panels.

1.1.2 For typical humid areas such as toilets, and kitchens, provide non-asbestos mineral or glass composition acoustical ceiling panels bonded with ceramic, moisture resistant thermo-setting resin, or other moisture resistant material with factory-applied standard washable painted finish; and recycled content: minimum of 40%.

1.1.3 For areas with very high humidity, heavy soiling, or staining, impact abrasion, such as laundry rooms, or maintenance shops, provide steel or aluminum faces with white baked on enamel finish, and non-asbestos mineral composition absorbent backing.
1.2 Provide standard exposed suspended acoustical ceiling grid. Grid shall be 24 inch by 48 inch (610mm by 1220mm) aluminum or steel non-corroding intermediate-duty standard grid system for lay-in acoustical panels. Finish shall be factory applied white baked enamel. Hang grid system as recommended by manufacturer but with no less than 0.106 inch (2.7mm) diameter wires, or with one by 3/16 inch (4.76mm) galvanized steel straps. Use composition 302 or 304, condition annealed stainless steel, 0.106 inches (2.7mm) in diameter over high humidity areas such as toilets, kitchens, and laundry rooms.

C303002 Plaster Ceiling Finishes

1.1 Plaster ceilings shall be cement plaster veneer finish on concrete or masonry. Refer to Section C3040 for paint system.
1.2 Portland cement plaster base coat, gray portland cement.
1.3 Portland cement plaster finish coat, gray portland cement. Factory-mixed finish coat according to the manufacturer's instructions.
1.4 Suspension system shall be steel materials with galvanized coating, aluminum coating, or a 55% aluminum-zinc coating. Provide primary suspended ceiling framing spaced at maximum 48 inches (1220mm) on center and secondary framing spaced at maximum 16 inches (400mm) on center, unless otherwise noted.

C3040 INTERIOR PAINTING AND SPECIAL FINISHES

1.1 The following coatings are applied directly to all surfaces of interior construction.
1.2 Paints used on this project shall be lead free.

C304001 Painting Systems Per Substrate

1.1 Painting practices shall comply with sound application and handling practices, and shall conform to the latest revision/edition of applicable codes, ordinances and regulations of the Republic of Kenya governing life/safety, fire protection and construction, in effect during this contract, except where specifically stated herein. Any material installed that does not meet the requirements of this

Performance Technical Specification (PTS) and/or applicable codes, ordinances and regulations will be removed and reinstalled at Contractor's expense.
1.2 Remove dirt, splinters, loose particles, grease, oil, and other foreign matter and substances deleterious to coating performance as specified for each substrate before application of paint or surface treatments. Oil and grease shall be removed prior to mechanical cleaning. Cleaning shall be programmed so that dust and other contaminants will not fall on wet, newly painted surfaces. Exposed ferrous metals such as nail heads on or in contact with surfaces to be painted with water-thinned paints, shall be spot-primed with a suitable corrosion-inhibitive primer capable of preventing flash rusting and compatible with the coating specified for the adjacent areas.
1.3 All coats on a particular substrate, or a paint system, must be from a single manufacturer.
1.4 The surfaces of wood doors, windows, frames and trim shall receive three coats of alkyd enamel paint. Apply one coat to all surfaces of wood prior to installation and two coats to exposed surfaces after installation. Prior to applying second coat spot touch-up first coat where wood is left uncoated due to cutting, drilling or other damage as a result of installation work.

C304002 Concrete Finishes

1.1 New and uncoated existing concrete surfaces:

One (1) coat latex filler/primer

Two (2) coats pigmented latex paint
1.2 Existing, previously painted, concrete surfaces:

Two (2) coats pigmented latex paint
1.3 New and uncoated existing concrete surfaces in toilets, food-preparation, food-serving, restrooms, laundry areas, shower areas, areas requiring a high degree of sanitation, and other high humidity areas unless otherwise specified, (Fill all holes in masonry surface):

One (1) coat latex filler/primer

One (1) coat pigmented alkyd paint

One (1) coat pigmented epoxy paint
1.4 Existing, previously painted concrete surfaces in toilets, food-preparation, food-serving, restrooms, laundry areas, shower areas, areas requiring a high degree of sanitation, and other high humidity areas unless otherwise specified, (Fill all holes in masonry surface):

One (1) coat pigmented alkyd paint

One (1) coat pigmented epoxy paint
1.5 New and uncoated existing, existing, previously painted concrete floors:

One (1) coat pigmented latex floor paint

or

One (1) coat pigmented epoxy paint.

C304003 Concrete Masonry Finishes

1.1 New and uncoated existing concrete masonry:

One (1) coat latex filler/primer

Two (2) coats pigmented latex paint
1.2 Existing, previously painted concrete masonry:

Two (2) coats pigmented latex paint
1.3 New and uncoated existing concrete masonry units in toilets, food-preparation, food-serving, restrooms, laundry areas, shower areas, areas requiring a high degree of sanitation, and other high humidity areas unless otherwise specified, (Patch imperfections and fill all masonry surface voids with block filler):

One (1) coat latex filler/primer

One (1) coat pigmented alkyd paint

One (1) coat pigmented epoxy paint
1.4 Existing, previously painted concrete masonry units in toilets, food-preparation, food-serving, restrooms, laundry areas, shower areas, areas requiring a high degree of sanitation, and other high

humidity areas unless otherwise specified, (Patch imperfections and fill all masonry surface voids with block filler):

One (1) coat pigmented alkyd paint

One (1) coat pigmented epoxy paint

C304004 Plaster Finishes

1.1 New and uncoated plaster:

One (1) coat latex filler/primer

Two (2) coats pigmented latex paint

1.2 Existing, previously painted plaster:

Two (2) coats pigmented latex paint

1.3 New and uncoated existing plaster in toilets, food-preparation, food-serving, restrooms, laundry areas, shower areas, areas requiring a high degree of sanitation, and other high humidity areas unless otherwise specified, (Patch imperfections and fill all masonry surface voids with block filler):

One (1) coat latex filler/primer

One (1) coat pigmented alkyd paint

One (1) coat pigmented epoxy paint

1.4 Existing, previously painted plaster in toilets, food-preparation, food-serving, restrooms, laundry areas, shower areas, areas requiring a high degree of sanitation, and other high humidity areas unless otherwise specified, (Patch imperfections and fill all masonry surface voids with block filler):

One (1) coat pigmented alkyd paint

One (1) coat pigmented epoxy paint

C304005 Metal Finishes

1.1 New steel/ferrous surfaces not otherwise specified:

Two (2) coats pigmented alkyd paint

1.2 Existing, previously painted steel/ferrous surfaces not otherwise specified:

One (1) coat pigmented alkyd paint

1.3 New steel/ferrous surfaces in toilet, food preparation, food serving, restrooms, shower areas and areas requiring a high degree of sanitation and other high humidity areas not otherwise specified except floors, hot metal surfaces, and new prefinished equipment:

One (1) coat pigmented alkyd paint

One (1) coat pigmented epoxy paint

1.4 Existing, previously painted steel/ferrous surfaces in toilet, food preparation, food serving, restrooms, shower areas and areas requiring a high degree of sanitation and other high humidity areas not otherwise specified except floors, hot metal surfaces, and new prefinished equipment:

One (1) coat pigmented epoxy paint

1.5 New and Existing, previously painted miscellaneous non-ferrous metal surfaces not otherwise specified:

Two (2) coats pigmented alkyd paint.

1.6 New and Existing, previously painted miscellaneous galvanized doors not otherwise specified:

Two (2) coats pigmented alkyd paint.

C304006 Interior Wood Finishes

1.1 New and existing, uncoated wood and plywood not otherwise specified:

One (1) coat latex wood primer

Two (2) coats pigmented latex enamel paint

1.2 Existing, previously painted wood and plywood not otherwise specified:

Two (2) coats pigmented latex enamel paint

1.3 New and existing, previously finished or stained wood and plywood, except floors; natural finish or stained:

Stain uniformly to desired hue

One (1) coat clear wood sealer/primer

One (1) coat clear, polyurethane finish
1.4 New and existing, uncoated wood timbers:

One (1) coat latex wood primer

One (1) coat solid body penetrating wood stain

One (1) coat solid body penetrating wood stain

(Apply after installation to exposed surfaces. Prior to applying final coat spot touch-up first coat where wood is left uncoated due to cutting, drilling or other damage as a result of installation work.)
1.5 New and Existing, previously finished or stained wood floors; natural finish or stained:

Stain uniformly to desired hue

One (1) coat clear wood sealer/primer

Two (2) coats clear, polyurethane finish
1.6 New and Existing, uncoated wood surfaces in toilets, food-preparation, food-serving, restrooms, laundry areas, shower areas, areas requiring a high degree of sanitation, and other high humidity areas not otherwise specified:

One (1) coat latex wood primer

Two (2) coats pigmented epoxy paint
1.7 Existing, previously painted wood surfaces in toilets, food-preparation, food-serving, restrooms, laundry areas, shower areas, areas requiring a high degree of sanitation, and other high humidity areas not otherwise specified:

Two (2) coats pigmented epoxy paint
1.8 New and existing uncoated wood doors:

One (1) coat latex wood primer

Two (2) coats pigmented latex enamel paint

-- End of Section –

SECTION D50: ELECTRICAL [08/06]

D50 GENERAL

1.1 Narrative

This section includes the construction of interior electrical systems. This section covers installations inside the facility and out to the 5-feet (1.5 m) line. See Section G40, *Site Electrical*, for continuation of systems beyond the 5-feet (1.5 m) line.

1.2 Design Guidance

Provide design and installation in accordance with Section 6 General Work Requirements. The Designer of Record is responsible for approving the submittals listed below.

1.3 Construction Submittals

Provide product and operation and maintenance data for all equipment and fixtures to the COR.

1.4 Qualifications, Certifications, and Test Plans

Qualifications, certifications, and Test Plans indicated herein shall be submitted 45 calendar days prior to the expected date of execution. Notify the Contracting Officer 14 calendar days prior to all testing. Submit test results within 7 calendar days of completion of testing.

1.4.1 Qualified Testing Organization

1.4.1.1 Contractor shall engage the services of a qualified testing organization to provide inspection, testing, calibration, and adjustment of the electrical distribution system and equipment listed in paragraph entitled "Acceptance Tests and Inspections" herein.

1.4.1.2 Organization shall be independent of the supplier, manufacturer, and installer of the equipment. The organization shall be a first tier subcontractor.

1.4.1.3 Submit name and qualifications of organization. Organization shall have been regularly engaged in the testing of electrical materials, devices, installations, and systems for a minimum of 5 years.

1.4.1.4 The organization shall have a calibration program, and test instruments used shall be calibrated in accordance with local government criteria.

1.4.1.5 Submit name and qualifications of the lead engineering technician performing the required testing services.

1.4.1.6 Include a list of three comparable jobs performed by the lead engineering technician with specific names and telephone numbers for reference.

1.4.1.7 Testing, inspection, calibration, and adjustments shall be performed by the lead engineering technician, certified by local government with a minimum of 5 years' experience inspecting, testing, and calibrating electrical distribution and generation equipment, systems, and devices.

1.4.2 Qualified Worker

1.4.2.1 Provide in accordance with local government criteria.

1.4.2.2 Qualified workers shall be allowed to be assisted by helpers on a 1 to 1 ratio, provided such helpers are registered in recognized apprenticeship programs.

1.4.2.3 Submit a certification confirming to local government criteria for qualified workers.

1.4.4 Material Standards

1.4.4.1 Ensure service support and provide manufacturer's nameplate in accordance with PTS Section 6 General Work Requirements.

1.4.4.2 Provide arc flash warning labels.

1.4.4.3 Provide laminated plastic nameplates for each switchboard, switchgear, panelboard, equipment enclosure, motor controller, relay, and switch. Each nameplate must identify the function and, when applicable, the position. Provide melamine plastic nameplates, 0.125 inch (3 mm) thick, white with black center core. Surface shall be matte finish. Corners shall be square. Accurately align lettering and engrave into the core. Minimum size of nameplates shall be 1 inch by 2.5 inches (25mm by 65 mm). Lettering shall be a minimum of 0.25 inch (6.35 mm) high normal block style.

1.4.5 Factory Testing

The COR reserves the right to witness all factory testing. The manufacturer shall have a calibration program that assures that all applicable test instruments are maintained within rated accuracy.

1.4.6 Electrical System Startup And Testing

1.4.6.1 Submit test plans for approval. The test plans shall be tailored to the systems provided.

1.4.6.2 The test plan shall list make and model and provide functional description of the test instruments and accessories and shall describe the setup of the tests to be conducted.

1.4.6.3 Test instruments shall be capable of measuring and recording or displaying test data at a higher resolution and greater accuracy than specified for the equipment's performance.

1.4.7 Factory Trained Engineer

Provide a factory trained engineer to supervise start-up and testing as required in referenced specifications.

1.4.8 Performance Verification Testing

1.4.8.1 The Contractor shall show by demonstration in service that all circuits and devices are in operating condition. Tests shall be such that each item of control equipment will function not less than five times.

1.4.8.2 The Contractor shall provide all necessary test equipment, tools, fuel, load banks, etc., labor, and materials for testing. As a minimum, all systems shall be tested in accordance with manufacturer's recommendations. Additional testing requirements for the various systems are described with those systems, hereinafter.

1.4.8.3 The Contractor shall assure that all applicable test instruments are maintained within rated accuracy. Dated calibration labels shall be visible on all test equipment.

1.4.8.4 Submit a separate electrical field test plan in accordance with manufacturer's recommendations and that conforms to local government criteria for each piece of electrical distribution equipment and/or system requiring performance verification testing.

1.4.8.5 The following items identify specific test requirements. Additional test requirements may be required by national or local government codes or manufacturer.

1.4.8.5.1 Panelboards - Field test each GFI and AFI circuit breaker with a certified outlet circuit tester to verify correct operation.

1.4.8.5.2 Motor control centers – Test motor control centers and motor starters in accordance with local government criteria.

1.4.8.5.3 Transient Voltage Surge Suppressors (TVSS)

Inspect for physical damage and compare nameplate data with the drawings and specifications, if applicable. Verify from the nameplate data that the TVSS equipment is appropriate for the system voltage.

Verify lead length between the TVSS equipment and the circuit connection is less than one foot (305 mm).

Verify wiring between the TVSS equipment and the circuit connection does not include high-inductance coils or sharp bends.

Confirm circuit breaker used for TVSS circuit connection is sized in accordance with TVSS manufacturer's requirements.

Ensure TVSS equipment is grounded in accordance with TVSS manufacturer's requirements. Check the ground lead on each device for individual attachment to the ground bus or electrode.

Check tightness of connections.

For TVSS equipment with visual indications of proper operation, verify that it displays normal operating characteristics.

1.4.8.5.4 Busway – Conduct standard tests for busway in accordance with local government criteria.

1.4.8.5.5 Receptacles – Test GFI receptacles with a certified outlet circuit tester to verify correct operation.

1.4.8.5.6 Lighting - Aim any photocell switches and locate light level sensors in accordance with the manufacturer's recommendations. Verify that equipment operates in accordance with user's requirements and in accordance with manufacturer's recommendations. Fluorescent lamps on electronic dimming ballast control shall be burned in at full light output for 100 hours before dimming.

1.4.8.5.10 Electronic Security Systems (ESS) – Test ESS in accordance with local government criteria requirements.

1.4.8.5.11 Grounding systems - Test the grounding system in accordance with local government criteria.

1.4.8.5.12 Lightning protection - Upon completion of the installation, Contractor shall furnish the local government acceptance for the system.

1.4.8.5.13 Emergency lighting - Test emergency lighting that is intended for means of egress in accordance with local government criteria. Confirm the emergency lighting system operates for a minimum of 90 minutes and emergency illumination satisfies local government criteria specified levels.

1.4.9 Acceptance Tests And Inspections

1.4.9.1 The COR reserves the right to witness all Acceptance Tests and Inspections, review data, and request other such additional inspections and repeat tests as necessary to ensure that the system and provided services conform to the stated requirements.

1.4.9.2 The qualified testing organization shall provide the acceptance tests and inspections test plan and perform the acceptance tests and inspections.

1.4.9.3 Test methods, procedures, and test values shall be performed and evaluated in accordance with local government criteria, the manufacturer's recommendations, and paragraph entitled "Field Quality Control" of each applicable specification section.

1.4.9.4 Tests identified as optional in local government criteria are not required unless otherwise specified.

1.4.9.5 Equipment shall be placed in service only after completion of required tests and evaluation of the test results have been completed.

1.4.9.6 Contractor shall supply to the testing organization complete sets of shop drawings, settings of adjustable devices, and other information necessary for an accurate test and inspection of the system prior to the performance of any final testing.

1.4.9.7 Perform acceptance tests and inspections on Automatic Transfer Switches, and Switchgear.

D5010 ELECTRICAL SERVICE AND DISTRIBUTION

D501001 Main Transformers

Pad mounted distribution transformers shall be in accordance with Section G40: Site Electrical Utilities.

D501002 Service Entrance Equipment

When a switchboard or switchgear is required, the Designer of Record shall utilize equipment that meets the local government criteria.

D501003 Interior Distribution Transformers

1.1 When required provide interior distribution transformers.
1.2 Mount interior distribution transformers on floors in non-public spaces or on wall mounted platforms.

D501004 Panelboards

1.1 Panelboards shall comply with the local government criteria.
1.2 Panelboards for non-linear loads shall meet the local government criteria, including heat rise tested, except with the neutral assembly installed and carrying 200 percent of the phase bus current during testing.
1.3 Provide molded case circuit breakers in accordance with the local government criteria.
1.4 Provide ground fault circuit interrupting circuit breakers in accordance with the local government criteria.
1.5 Provide arc fault circuit breakers in accordance with the local government criteria.

D501005 Enclosed Circuit Breakers

1.1 Provide molded case circuit breakers in accordance with the local government criteria. Provide with solid neutral when grounded conductor is present.

D501006 Motor Control Centers

1.1 Motor control centers shall comply with the local government criteria.
1.2 Provide disconnecting means capable of being locked out for machines and other equipment to prevent unexpected startup or release of stored energy in accordance with the local government criteria.
1.3 When Variable Frequency Drives are required, the Designer of Record shall utilize equipment that meets the local government criteria.

D501007 Other Service And Distribution

1.1 Transient voltage surge supressors (tvss)
1.2 Busway shall comply with the local government criteria.

D5020 LIGHTING AND BRANCH WIRING

D502001 Branch Wiring

1.1 Provide wiring and connections for special outlets where required.
1.2 All homerun circuits must contain no more than 3 phase conductors.
1.3 Switches shall comply with the local government criteria.

D502002 Lighting Equipment

1.1 Installation shall meet requirements of manufacturer’s recommendations and the additional requirements for severe seismic disturbance. Fixture support wires shall conform with the local government criteria, galvanized regular coating, soft temper.

D502003 Ballasts

1.1 Electronic ballasts shall include a 5-year warranty.

D5040 OTHER ELECTRICAL SERVICES

D504001 General Construction Items (Electrical)

D504002 Emergency Lighting And Power

1.1 Emergency Lighting

1.1.1 When an emergency generator is required, the Designer of Record shall utilize equipment that meets the local government criteria.

1.1.2 When an Automatic Transfer Switch is required, the Designer of Record shall utilize equipment that meets the local government criteria.

1.1.3 When a UPS system is required, the Designer of Record shall utilize equipment that meets the local government criteria.

D504003 Grounding Systems

Provide a complete grounding system for all electrical as required by the Engineer of Record.

-End of Section-

SECTION F10: SPECIAL CONSTRUCTION [08/06]

F1010 PRE-ENGINEERED BUILDINGS

1.1 Narrative

1.1.1 A Structural Insulated Panel (SIP) is defined as a product comprising of insulating material sandwiched by two (2) structural skins. Acceptable skin materials shall consist of fiber reinforced composite panels. Wood is <u>not</u> acceptable as a structural skin, and thus Oriented Strand Board (OSB) panels shall not be used. Acceptable insulating materials shall consist of Expanded Polystyrene Foam (EPS), Extruded Polystyrene Foam (XPS), Polyurethane Foam or any approved material. Commercially available products are designated by various trade names such as Fiber Composite Panels (FRP), Structural Composite Insulated Panels (SCIP), Composite Structural Insulated Panels (CSIP), etc. Include fasteners, anchors, doors and frames, vents, screens and gasketing.

1.2 Design Guidance

1.2.1 The classroom building shall conform to dimensions outlined in this performance technical specification, suitable to house six (6) separate classrooms. with an interior ceiling height of at least 2.74m from a tiled finished floor. Contractor shall propose an overall building length, width and eave height necessary to meet these requirements.

1.2.2 Building shall be completely waterproof, air and watertight, corrosion and chemical resistant, lightweight, and environmentally aesthetic. Building shall comply with all applicable fire system and egress requirements.

1.2.3 Building provided shall be the end product of one manufacturer to achieve standardization for appearance.

1.2.4 Building shall be designed to sustain superimposed loads for load combinations specific to the site conditions in accordance with but not limited to the following:

a. Design loads:

-Dead load of building, live load, wind load and seismic per sections A20 of this PTS.

b. During installation of the composite FRP structure, a concentrated load should not be applied on any portion of the roof that exceeds manufacturer's recommendations. The concentrated load shall not be applied to the roof if other loads are present.

c. Any stresses produced by site-specific load conditions or building geometry.

d. Average Rvalue of the assembled building shall be minimum of R-15.

1.3 Construction Submittals

1.1.1 Provide the design and installation in accordance with Section 5 General Work Requirements, in addition:

A. Concept Design

1. Plan and section views of latrine building layout
2. Building design loading and assumptions
3. Foundation design
4. Flooring Options
5. Interior, exterior and flooring color options

B. Product Data:
1. Resin, glass reinforcing, insulation material specifications.

C. Shop Drawings:
1. Include plans and elevations, fabrication details indicating laminate thickness and section depths and widths, location of openings and equipment supports, size and location of anchor bolts, and gasketing details.

1.4 Fabrication and Assembly

1.4.1 Factory-assemble complete building component panels. Flanges between adjacent panels shall be factory bonded together with structural adhesive. Seal exterior edges of adjacent panels with color matched silicon sealant. Bond any attachments with glass fibers and resin from interior of panel. Resin seal any cut or drilled edges.
1.4.2 Furnish and install anchors, doors, gasketing as required. Structure shall be a permanently fused building assembly, yielding a watertight, one-piece facility.

1.5 Installation

1.5.1 Examine structural surface to receive building for acceptable installation conditions. Do not start installation unless acceptable conditions are provided.
1.5.2 Field erect panels in accordance with manufacturer's instructions, specifications and approved submittals. Flanges between adjacent panels shall be connected and gasketed in accordance with manufacturer’s requirements. Use washers to avoid localized stresses. Seal exterior edges of adjacent panels with color matched silicon sealant.
1.5.3 Install continuous neoprene gasket between perimeter anchoring flange and where panels rest on supporting structure. Resin seal cut or drilled edges. Repair damaged panels.
1.5.4 Store and protect on manufacturer's site, project site, during shipment and during installation to prevent warping and fracturing.
1.5.5 Contractor is responsible for overall project coordination. All interface, compatibility and design considerations concerning any materials not furnished by the FRP manufacturer are to be considered and coordinated by the Contractor.

--End of Section—

SECTION G10: SITE PREPARATION

G10 GENERAL

1.1 Design Guidance

1.1.1 Provide the design and installation in accordance with Section 6 General Work Requirements.

1.2 Construction Guidance

1.2.1 The Contractor shall provide all plant, labor, material, and equipment necessary to prepare the project site for construction activities as specified herein.

1.3 Ownership Of Demolition Materials

1.3.1 All demolition materials and appurtenances shall be properly disposed and in accordance with all applicable regulations. Maximize the use of deconstruction and recycling services.

1.4 Hazardous Materials

1.3.1 Before demolition can commence, any hazardous materials shall be abated in accordance with the requirements herein.

1.5 Demolition Plan

1.5.1 The Contractor shall provide a proposed demolition plan and work/outage schedule outlining demolition work activities, facility outages and utility outages. The Contractor shall obtain approval from the Contracting Officer for the proposed demolition plan and work/outage schedule prior to demolition activities.

1.6 Protection Of Persons

1.6.1 Where pedestrian and driver safety is endangered in the area of removal work, use traffic barricades with flashing lights.

1.7 Protection Of Existing Items

1.7.1 Protect existing buildings, facilities and other work that is to remain in place, be reused, or remain the property of the owner. At no additional expense to the US government, repair all items that are damaged during performance of the work to their original condition, or replace with new. Do not overload pavements to remain.

1.8 Dust Control

1.8.1 Prevent the spread of dust and debris to interiors of buildings or onto pavements and avoid the creation of a nuisance or hazard in the surrounding area. Do not use water for dust control if it results in hazardous or objectionable conditions such as, but not limited to, ice, flooding, or pollution. Sweep pavements as often as necessary to control the spread of debris.

1.9 Noise Control

1.9.1 Make the maximum use of low-noise emission products. Keep noise levels to the lowest level as practical. Coordinate and schedule loud noise production with adjacent work functions to minimize interruption of critical activities. Schedule work hours to minimize disruption of nearby residential areas.

1.10 Geotechnical Data

1.10.1 A current geotechnical report for the project site is not available. At the contractor's discretion and as the design process requires, provide subsurface investigation and a geotechnical report to facilitate the completion of the design. Subsurface investigation shall not interfere with current owner operations and activities at the project site.

1.10.2 Prior to the civil and structural design submit the Geotechnical Report (an Adobe Acrobat PDF version on CD and two printed copies) for review and record keeping purposes. The report shall become the property of the Government. Geotechnical reports generated during construction shall be provided to the Contracting Officer (an Adobe Acrobat PDF version and two printed copies) for record keeping purposes.

1.10.3 Contractor-Provided Geotechnical Report shall include the following as it relates to all elements of the specific design:

- 1.10.3.1 The project site description, vicinity map and site map.
- 1.10.3.2 Results of all the field and laboratory testing.
- 1.10.3.3 Engineering analysis, discussion and recommendations addressing:
  - 1.10.3.3.1 Settlement
  - 1.10.3.3.2 Bearing Capacity
  - 1.10.3.3.3 Foundation considerations
  - 1.10.3.3.4 Site preparation (earthwork procedures and equipment), compaction requirements, building slab preparation (as applicable), soil sensitivity to weather and equipment, and groundwater influence on construction.
- 1.10.3.4 The Geotechnical report shall be signed by a registered Geotechnical Engineer.
- 1.10.3.5 The submitted report shall be accomplished by a cover letter identifying any recommendations of the report proposed to be adopted into the design which are interpreted

by the Contractor as either conflicting with or being modifications to the Geotechnical or Pavement related requirements of this RFP.

G1010 SITE CLEARING

1.1 The Contractor shall clear all trees, shrubs, brush and vegetation necessary for construction of the project. Clearing includes the felling, trimming, and cutting of trees into sections.
1.2 During clearing, demolition and construction activities, preserve and protect trees, shrubs and vegetation not directly impacted by the construction.
1.3 Any trees required to be removed shall be remove and dispose of to a depth of at least 18 inches (450 mm) below ground surface. Fill depressions with satisfactory material and compact. Mound fill 2 inches (50 mm) above adjacent surface to allow for settling when not part of a subbase.
1.4 Remove stumps to a depth of at least 450 mm (18 inches) below ground surface and grind stumps 450 to 750 mm (18 to 30 inches) below ground surface. Fill depressions with satisfactory material and compact. Mound fill 50 mm above adjacent surface to allow for settling when not part of a subbase.
1.5 Within the clearing limits, remove and dispose of all logs, shrubs, brush, matted roots, roots larger than 2 inches (50 mm) in diameter, and other debris to a depth of at least 18 inches (450 mm) below ground surface. Fill depressions made by grubbing with satisfactory material and compact to make the new surface conform to the adjacent surface of the ground.
1.6 Trim trees to remain of dead branches 1 inch (25 mm) or more in diameter. Neatly cut limbs and branches to be trimmed close to the bole of the tree or main branches.
1.7 Material Disposal:

1.7.1 During hauling, prevent spillage on roads, or adjacent areas.

1.7.2 Material is to be removed to an off-site location as directed by the contracting officer.

1.7.3 Where burning is permitted, adhere to the applicable governmental, and local regulations.

G1020 SITE DEMOLITION & RELOCATIONS

1.1 Demolition work shall include the demolition, removal and legal disposal of existing construction as required to accommodate the new construction. Contractor shall take care to prevent damage to existing construction, utilities, and other items not scheduled for demolition and shall repair such damage to the satisfaction of the Contracting Officer and at no additional cost to the Government.
1.2 Do not begin demolition until the Demolition Plan has been approved by and authorization is received from the Contracting Officer.
1.3 Whenever possible, all items demolished shall be salvaged or recycled in lieu of being disposed of as waste. All items to be demolished which are not salvageable or reused, shall become the property of the Contractor and shall be removed from project site. The Government will not be responsible for the condition, loss of, or damage to, such property after contract award. Materials and equipment shall not be viewed by prospective purchasers or sold on the site.
1.4 Remove and store materials and equipment identified to be reused or relocated to prevent damage. Reinstall as the work progresses.
1.5 Materials and equipment identified to be salvaged are to be removed by the Contractor and will remain the property of the facility. Deliver salvaged items to a storage site on the facility in accordance with instructions of the Contracting Officer.
1.6 All demolition materials not identified for reuse or salvage and demolition rubbish and debris shall be properly disposed and in accordance with all applicable regulations.
1.7 Rubbish and debris shall be removed from the construction site daily. Materials that cannot be removed daily shall be stored in an area as directed by the contracting officer and removed from the construction site as soon as practical.
1.8 Maximize the use of deconstruction and recycling services.
1.9 Before demolition can commence, any hazardous materials shall be abated in accordance with governmental and local requirements.
1.10 The Contractor shall obtain approval from the Contracting Officer for the proposed demolition plan and work/outage schedule prior to demolition activities.

G102001 Building Mass Demolition

1.1 For portions of the building to remain, protect building interior, materials, and equipment from weather at all times.
1.2 Perform demolition of substructure, superstructure, exterior closure, roofing, interior construction, interior finishes, mechanical systems, electrical systems, equipment, and other non-hazardous building items as specified herein.
1.3 For occupied buildings ensure openings to the exterior are secured by the end of the work shift.
1.4 For removal and re-roofing projects, remove only as much roofing as can be recovered by the end of the work shift.
1.5 The owner shall remove all uncontaminated furnishings and equipment from the work area prior to the start of the work.

G102002 Hazardous Components Abatement

1.1 Perform demolition of hazardous materials including; asbestos containing material, lead based paint, mercury, LLR (low level radiation) materials, ODS (ozone depleting substances), PCB (polychlorinated biphenyl), animal droppings, mold, mold spores, and any material contaminated by any of these, as specified herein and to comply with all applicable governmental and local regulations.
1.2 Prior to starting work, conduct any additional testing that may be needed to provide a final design and to comply with all applicable governmental and local regulations.

G102003 Aboveground Site Demolition

1.1 Remove concrete and asphaltic concrete paving and slabs as required for construction of project. Remove the existing aggregate base in areas to receive new pavement to the depth of the proposed pavement section below new finish grade. Remove the existing aggregate base in areas not to receive new pavement to a depth of 8 inches (200 mm) below existing adjacent grade. Provide neat sawcuts at limits of pavement removal; protect sawcuts so that new pavement will butt against the existing without feathering.
1.2 Remove aboveground storage tanks as indicated.

G102004 Underground Site Demolition

1.1 Remove existing utilities and terminate in accordance with government and local regulations covering the specific utility. Disturbance to utilities can not cause a failure to utilities to remain operational, unless a planned outage is approved by the contracting officer and coordinated with on-site personnel.
1.2 Protect existing utilities to remain. Where removal of existing utilities and pavement is required, provide approved barricades, temporary covering of exposed areas, and temporary services or connections. Repair damage to existing utilities to remain at no additional expense to the government.
1.3 Perform underground storage tank removal work as indicated.

G102005 Fencing Relocation

1.1 Replace fencing displaced during site clearing work. Remove old concrete post foundations and replace with new concrete at new location. Repair relocated items that are damaged or replace damaged items with new undamaged items as approved by the Contracting Officer and at no additional expense to the government.

G102008 Site Cleanup

1.1 Remove rubbish and debris from the project site daily; do not allow accumulations inside or outside the building(s) or on pavements. Store materials that cannot be removed daily in areas specified by the Contracting Officer.

G1030 SITE EARTHWORK

1.1 This section includes the design and construction requirements for earthwork and grading related to construction of the roadways, parking, paved areas and other related sitework. Refer to Section A10 for earthwork related to construction of structures, including building, footings, foundations, retaining walls, slabs, tanks, and utility appurtenances.

G103001 Grading

1.1 Establish finish floor elevations so that the floor is a minimum of 4 inches (10cm) above highest grade adjacent to the building. Provide a slope away from the building of 1:10 for a distance of 5 feet (150cm) from all sides of the building.
1.2 The Contractor shall preserve natural topographic features to minimize the impact on the existing drainage patterns at and adjacent to the site.
1.3 Finish grading shall provide drainage towards new and existing drainage features. Finish grading shall not result in low spots that hold water or that direct runoff towards new or existing facilities and/or site amenities.

G103002 Common Excavation

1.1 The Contractor shall preserve natural topographic features to minimize cut and fill requirements. Re-use suitable excavation material as fill material as needed. All unsuitable material and surplus excavation shall become the property of the Contractor and shall be diposed of as specified above.

G103003 Rock Excavation

1.1 Blasting is not allowed.
1.2 Requests for additional compensation shall not be made by the Contractor for degree of hardness or difficulty encountered in removal of material. All unsuitable material and surplus excavation shall become the property of the Contractor and shall be disposed of as specified above.

G103004 Fill & Borrow

1.1 Where sufficient topsoil and satisfactory materials are not available on the project site, provide suitable borrow materials.
1.2 Remove unsatisfactory soil materials from the site as specified above and replace with satisfactory soil materials.
1.3 Soils that are determined as clean fill via testing shall be backfilled and compacted in accordance with these requirements.

G103005 Compaction

1.1 Hand compact fill material in 6 inch (15cm) lifts. Compact to a density similar to native soil.

G103006 Soil Stabilization

1.1 Provide soil stabilization to prevent erosion on slopes less than 1:2 and loose soil. Apply and install geosynthetics in accordance with the manufacturer's written instructions or natural woven mats with 12 inch (30cm) rot resistant wood stakes. Drive or cut off stakes to within 1/2" 10mm) of grade.

G103007 Slope Stabilization

1.1 Provide soil stabilization to prevent erosion on slopes greater than 1:2. Design and install manufactured gabions, or geogrids, or natural rock anchors in accordance with the manufacturer's written instructions.

G103008 Shoring

1.1 Provide sheeting, shoring, bracing, cribbing and underpinning in excavations and trenches deeper than 4 feet (120cm), where sides of excavation are greater than a 1:2 slope, in accordance with all government and local codes and requirements.
1.2 Provide structural shoring for slopes greater than 1:2 to protect existing structures.

G103009 Temporary Dewatering

1.1 The design of the temporary dewatering system shall account for soil conditions, rainfall, fluctuations in the groundwater elevations and the potential settlement impact on adjacent facilities due to dewatering. While the excavation is open, the water level shall be maintained continuously, at least 1.0 foot (0.30 m) below the working level.
1.2 French drains, sumps, ditches or trenches will not be permitted within 3 feet (1m) of the foundation of any structure without written approval of the contracting officer.

G103010 Temporary Erosion & Sediment Control

1.1 Develop and implement temporary erosion and sediment control measures prior to or in conjunction with commencement of earthwork in accordance with government and local erosion and sediment control regulations. Place natural woven mats with 12 inch (30cm) wood stakes.

1.2 Maintain temporary erosion control measures throughout the project until areas are fully stabilized.

G103011 Other Site Earthwork

1.1 During sitework, if any historic artifacts are encountered, or if indications of that the site may have cultural significance, discontinue work in that area and notify the contracting officer immediately.

G1040 HAZARDOUS WASTE REMEDIATION

1.1 Perform excavation of contaminated soil and/or groundwater in accordance with all government and local codes and requirements. Select methods and equipment to minimize disturbance to areas beyond the limits of the excavation area. Material that becomes contaminated as a result of the Contractor's operations shall be removed and disposed of at no additional cost to the Government. Where excavation extends into groundwater levels, dewatering methods shall be employed on a localized basis to facilitate excavation operations. Water generated by dewatering during excavation shall be collected and tested in accordance with the ESR and the approved work plan.
1.2 Water that contains contaminants above levels allowed by government and local authorities shall be removed or treated in accordance with all government and local codes and requirements.
1.3 Non-contaminated water may be disposed of on-site.
1.4 Soils determined to be contaminated must be stockpiled in a way that contains water runoff or protects soil from rain or water flow, and shall be disposed of as soon as practical in accordance with all government and local codes and requirements.
1.5 Soils that are determined to contain contaminants below levels allowed by government and local authorities may be used as clean fill.
1.6 In the event of a spill or release of hazardous substances, pollutant, contaminant or oil, notify the Contracting Officer immediately. Containment actions shall be taken immediately to minimize the effect of any spill or leak. Clean up shall be performed at the Contractor’s expense in accordance with all government and local codes and requirements.
1.7 All contaminated waste materials shall become the property of the Contractor and shall be transported, disposed of in accordance with all government and local codes and requirements.
-- End of Section –

SECTION G30: SITE CIVIL/MECHANICAL UTILITIES [08/06]

G30 GENERAL

1.1 Design Guidance

1.1.1 Provide the design and installation in accordance with Section 6 General Work Requirements.

1.2 Construction Guidance

1.2.1 The Contractor shall provide all plant, labor, material, and equipment necessary to provide, deliver and place exterior walls to form exterior enclosure as specified herein.

1.3 Definitions

1.3.1 Sanitary sewer: any pipe, conduit, open ditch or channel that carries sewage and excludes storm, surface water, and ground water.

1.3.2 Storm sewer: any pipe, conduit, open ditch or channel that conveys rainwater, surface water, subsurface water and similar liquid wastes.

1.3.3 Waste: the discharge from any fixture, appliance, area or appurtenance that does not contain fecal matter.

1.3.4 Sewage: any liquid waste containing animal or vegetal matter in suspension or solution, including liquid containing chemicals in solution.

1.4 Quality Assurance

1.4.1 Materials and assemblies installed in the work shall be inspected and found to be in compliance with industry standards and these specifications prior to acceptance of the work.

1.4.2 Items found not to be in compliance shall be removed or corrective measures taken, to assure compliance with the referenced standard.

1.4.3 The Contractor shall perform field tests and provide labor, equipment and incidentals required for testing.

1.5 Materials

1.5.1 All materials shall be new, and shall bear the label of standardizing agency whenever standards have been established and label service is normally and regularly furnished by the agency.

1.5.2 All equipment provided shall be listed and labeled suitable for the specified purpose, environment, and application and installed in accordance with manufacturer's recommendations.

1.5.3 The Contractor shall only use materials that conform to the practices of the local construction industry for each particular construction discipline.

1.5.4 Materials selected in this contract shall meet appropriate designated standards, or have been tested and found suitable for their specified purpose.

1.6 Additional Work

1.6.1 Provide such other labor and materials as are required for a complete and usable system in accordance with the requirements of the criteria listed, regardless of whether such materials and associated labor are called for elsewhere in this RFP.

SECTION G40: SITE ELECTRICAL UTILITIES [06/07]

G40 GENERAL

1.1. Narrative

1.1.1 This section covers installations exterior to the facility up to the five foot line. See Section D50, *Electrical*, for continuation of systems into the building.

1.2. Design Guidance

Provide the design and installation in accordance with Section 6 General Work Requirements. The Designer of Record is responsible for approving the submittals listed below.

1.3. Construction Guidance

Provide product and operation and maintenance data for all equipment and fixtures to the COR. Provide certification that all adjustable protective device settings have been set in accordance with the coordination study for the as-built equipment and configuration.

1.4 Qualifications, Certifications, and Test Plans

Qualifications, certifications, and Test Plans indicated herein shall be submitted 45 calendar days prior to the expected date of execution. Notify the Contracting Officer 14 calendar days prior to all testing. Submit test results within 7 calendar days of completion of testing.

1.4.1 Qualified Testing Organization

1.4.1.1 Contractor shall engage the services of a qualified testing organization to provide inspection, testing, calibration, and adjustment of the electrical distribution system and equipment listed in paragraph entitled "Acceptance Tests and Inspections" herein.

1.4.1.2 Organization shall be independent of the supplier, manufacturer, and installer of the equipment. The organization shall be a first tier subcontractor.

1.4.1.3 Submit name and qualifications of organization. Organization shall have been regularly engaged in the testing of electrical materials, devices, installations, and systems for a minimum of 5 years.

1.4.1.4 The organization shall have a calibration program, and test instruments used shall be calibrated in accordance with local government criteria.

1.4.1.5 Submit name and qualifications of the lead engineering technician performing the required testing services.

1.4.1.6 Include a list of three comparable jobs performed by the lead engineering technician with specific names and telephone numbers for reference.

1.4.1.7 Testing, inspection, calibration, and adjustments shall be performed by the lead engineering technician, certified by local government with a minimum of 5 years' experience inspecting, testing, and calibrating electrical distribution and generation equipment, systems, and devices.

1.4.2 Qualified Worker

1.4.2.1 Provide in accordance with local government criteria.

1.4.2.2 Qualified workers shall be allowed to be assisted by helpers on a 1 to 1 ratio, provided such helpers are registered in recognized apprenticeship programs.

1.4.2.3 Submit a certification confirming to local government criteria for qualified workers.

1.4.3 Qualified High Voltage Electrician

All workers on high voltage electrical crews shall have 5 years experience working medium voltage systems on similar projects involving the same or higher voltage.

1.4.4 Qualified Cable Splicer (High Voltage Cable)

1.4.4.1 Certification shall include the training, and experience of the individual on the specific type and classification of medium voltage cable to be provided under this contract.

1.4.4.2 In order to establish the cable splicer's competency, the Contractor shall be required to submit the following 30 calendar days prior to commencement of the splice/termination:

1.4.4.2.1 Documentation to verify that the individual has completed a splice and or termination of the type to be installed under this contract.

1.4.4.2.2 Documentation that said splice/termination has been tested and passed in accordance with local government criteria requirements. Test results shall be included.

1.4.4.2.3 A statement of the number of years in which the individual has been splicing/terminating high voltage cable.

1.4.5 Qualified Cable Splicer (Telecommunications)

Certification shall include the training, and experience of the individual on specific type and classification of telecommunications cable to be provided under this contract.

1.4.8 Material Standards

1.4.8.1 Ensure service support and provide manufacturer's nameplate.

1.4.8.2 Provide warning labels for each enclosure of electrical equipment, including substations, pad-mounted transformers, pad-mounted switches, pad-mounted sectionalizing termination cabinets, and switchgear

1.4.8.3 Warning labels shall identify the enclosure as 1) containing energized electrical equipment and 2) an arc flash hazard.

1.4.9 Factory Testing

The COR reserves the right to witness all factory testing. The manufacturer shall have a calibration program that assures that all applicable test instruments are maintained within rated accuracy.

1.4.10 Electrical System Startup and Testing

1.4.10.1 Submit test plans for approval. The test plans shall be tailored to the systems provided.

1.4.10.2 The test plan shall list make and model and provide functional description of the test instruments and accessories and shall describe the setup of the tests to be conducted. Test instruments shall be capable of measuring and recording or displaying test data at a higher resolution and greater accuracy than specified for the equipment's performance.

1.4.10.3 Factory Trained Engineer

1.4.10.3.1 Provide a factory trained engineer to supervise start-up and testing as required in referenced specifications.

1.4.10.4 Performance Verification Testing

1.4.10.4.1 The Contractor shall show by demonstration in service that all circuits and devices are in operating condition. Tests shall be such that each item of control equipment will function not less than five times. The Contractor shall provide all necessary test equipment, tools, fuel, load banks, etc., labor, and materials for testing. As a minimum, all systems shall be tested in

accordance with manufacturer's recommendations. Additional testing requirements for the various systems are described with those systems, hereinafter. The Contractor shall assure that all applicable test instruments are maintained within rated accuracy. Dated calibration labels shall be visible on all test equipment.

1.4.10.4.2 Submit a separate electrical field test plan in accordance with manufacturer's recommendations and that conforms to local government criteria for each piece of Electrical Distribution Equipment and/or System requiring Performance Verification Testing.

1.4.10.4.3 The following items identify specific test requirements. Additional test requirements are contained in the applicable [local government criteria].

Cable – Test cable in accordance with the manufacturer's recommendations and local government criteria. Adhere to precautions and limits as specified in the applicable local government criteria for the specific cable.

Grounding - Test ground systems in accordance with the manufacturer's recommendations and local government criteria.

Site Lighting - Contractor's Quality Control (CQC) representative shall perform a field survey of site lighting systems in accordance with local government criteria for acceptance. Show that the lighting system operates in accordance with the user's requirements and is in accordance with designed levels. Provide certification that the measured lighting levels conform to the design requirements and the requirements of the Ministry of Education.

1.4.10.5 Acceptance Tests and Inspections

The Qualified Testing Organization shall provide the Acceptance Tests and Inspections test plan and procedures and perform the acceptance tests and inspections. Test methods, procedures, and test values shall be performed and evaluated in accordance with local government requirements, the manufacturer's recommendations, and paragraph entitled "Field Quality Control" of each applicable specification section. Tests identified as "optional" are not required unless otherwise specified. Equipment shall be placed in service only after completion and evaluation of required tests and of the test results have been completed. Contractor shall supply to the testing organization complete sets of shop drawings, settings of adjustable devices, and other information necessary for an accurate test and inspection of the system prior to the performance of any final testing.

G4010 ELECTRICAL DISTRIBUTION

G401001 Substations

1.1 When secondary unit substations are required, the Engineer of Record shall utilize equipment that meets the local government criteria.

G401002 Transformers

1.1 When transformers are required, the Engineer of Record shall utilize equipment that meets the local government criteria.

G401003 Switches, Controls And Devices

1.1 When switches or control devices are required, the Engineer of Record shall utilize equipment that meets the local government criteria.

G401004 Overhead Electric Conductors

Power line conductors shall be strung in accordance with manufacturer's standard sag and tension recommendations.

G401005 Towers, Poles, Crossarms And Insulators

1.1 Wood poles shall comply with the local government criteria. Pressure treat poles in accordance with the local government criteria. The quality of each pole shall be ensured with a wood quality control brand on each piece or by an approved inspection agency report.

1.2 Concrete poles shall comply with the local government criteria loadings for distribution poles.

1.3 The size of poles required, class, height and other data, shall be determined by the designer of record to meet requirements of the pole line. Crossarms shall be wood, steel or fiberglass in

accordance with industry and local standards. Insulators, cutouts and associated equipment shall be determined by the Engineer of Record to meet system requirements.

G401006 Underground Electric Conductors

Route underground cables to minimize splices. Cable pulling tensions shall not exceed the maximum pulling tension recommended by the cable manufacturer. High voltage cable termination shall be suitable for the location installed and meet the local government criteria.

G401007 Ductbanks, Manholes, Handholes And Raceways

Concrete manholes and handholes shall be standard type pre-cast concrete. Composite/Fiberglass handholes shall be polymer concrete reinforced with a heavy weave fiberglass reinforcing as indicated. Load ratings of manholes and handholes shall be suitable for the location installed.

G401008 Grounding Systems

Provide a complete grounding system within the electrical distribution systems.

G401010 Cathodic Protection Systems

Cathodic protection systems shall be in accordance with the local government criteria.

G401011 Equipment Requirements For Coastal And High Humidity Areas

Provide exterior equipment designed for coastal and high humidity areas.

G403002. Cables and Wiring

Provide cabling as required by the respective category of communication system between the connection point and building entrance facilities.

G403003. Ductbanks, Manholes And Handholes

Provide a direct buried system for site telecommunications and security.

G403004. Other Communication and Alarm

NOT USED

G403005. Grounding Systems

Provide a complete grounding system for all electrical systems.

-- End of Section --

9. Photos

Inside
on
Under
In front of
Outside
Behind

Site Sketch.

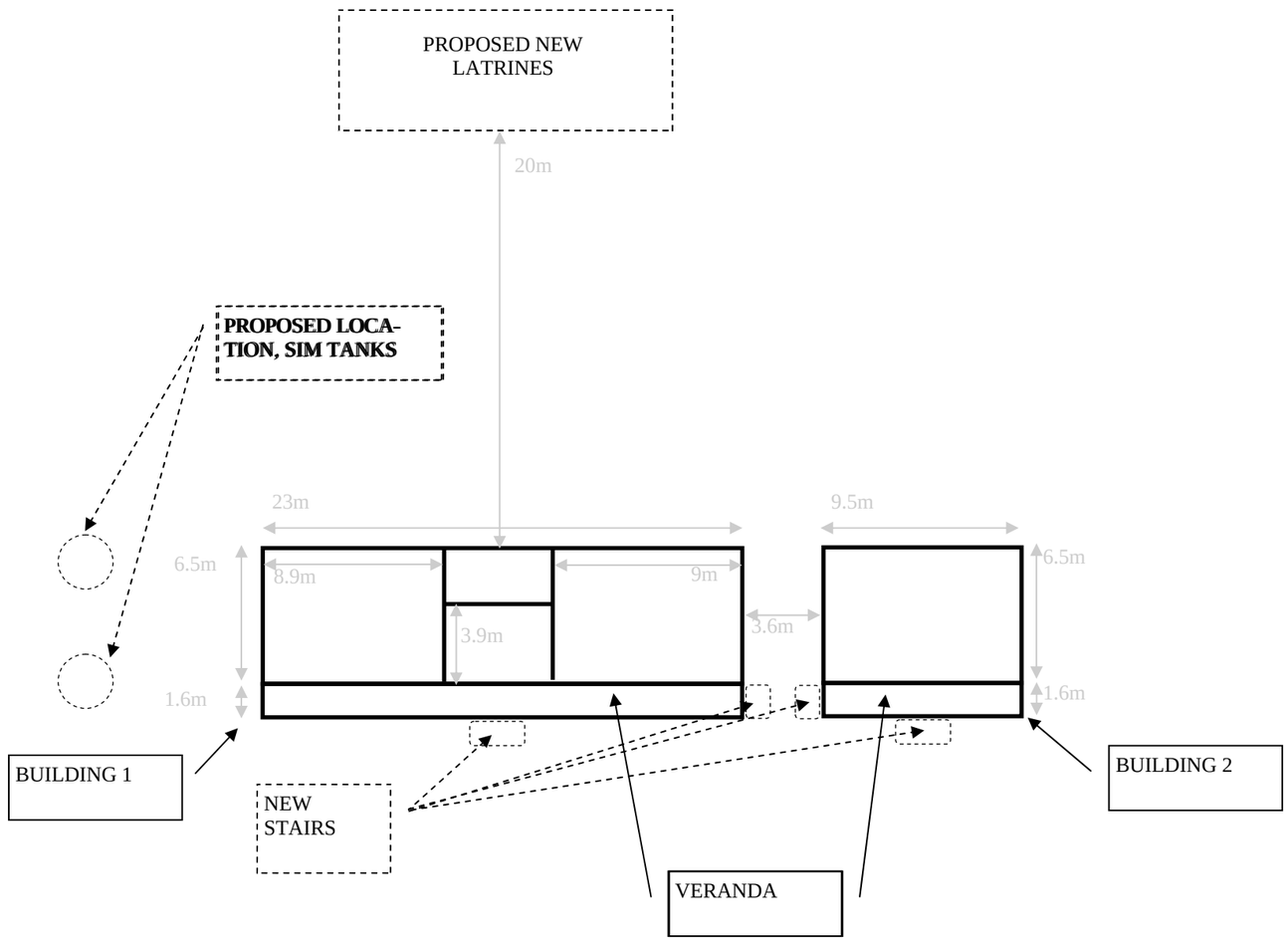

DIMA SITE SKETCH, MKINGA DISTRICT, TANGA REGION, TANZANIA
NOT TO SCALE
LATITUDE/LONGITUDE: (-4.9097, 38.9822)
SKETCH COMPLETED BY LT TIMOTHY PALIK, J-44, CJTF-HOA
21 APRIL 2015

NOTES:

- CONTRACTOR TO FIELD VERIFY ALL DIMENSIONS
- CONFIRM IN WRITING LOCATIONS FOR NEW WATER CATCHMENTS AND NEW LATRINES.

BUILDING 1

- FINISH OF BUILDING EXTERIOR: PATCH, PRIME, AND PAINT TO MATCH EXISTING FINISH
- PROVIDE NEW STEPS AT VERANDA AS SHOWN
- PATCH CONCRETE VERANDA
- PATCH ALL CONCRETE FLOORS
- PATCH AND PAINT ALL INTERIOR WALLS
- PROVIDE AND INSTALL THREE (3) NEW EXTERIOR DOORS
- REFINISH TWENTY-FOUR (24) EXISTING WINDOWS, PROVIDE NEW WIRE SCREENS FOR EACH
- PROVIDE AND INSTALL NEW ROOF SYSTEM TO INCLUDE TRUSSES AND ROOF PANELS

BUILDING 2

- PATCH, PRIME, AND PAINT EXTERIOR TO MATCH BUILDING 1
- PROVIDE NEW STEPS AT VERANDA AS SHOWN
- PATCH CONCRETE FLOORS
- PROVIDE AND INSTALL NEW ROOF SYSTEM TO INCLUDE TRUSSES AND ROOF PANELS
- REFINISH SEVEN (7) EXISTING WINDOWS AND ONE (1) EXISTING DOOR. PROVIDE NEW WIRE SCREENS FOR EACH WINDOW.

NEW WATER CATCHMENT

- PROVIDE AND INSTALL ONE COMPLETE 20,000 LITER WATER CATCHMENT SYSTEM. PROVIDE AND INSTALL GUTTERS ON BUILDING ONE.
- LOCATION IS TO BE CONFIRMED IN WRITING BY SCHOOL REPRESENTATIVE

NEW LATRINES

- PROVIDE AND INSTALL TWELVE (12) NEW VIP LATRINES, FOUR (4) BOYS AND EIGHT (8) GIRLS.
- LOCATION IS TO BE CONFIRMED IN WRITING BY SCHOOL REPRESENTATIVE