ENGINEERING SERVICE CENTER
Port Hueneme, California 93043-4370

TECHNICAL MANUAL

FIELD TEST HANDLING EQUIPMENT OPERATIONS & MAINTENANCE

VOLUME II
REVISION ~

DRAFT June 8, 2011

UNCLASSIFIED

Distribution authorized to U.S. Government agencies only; Administrative/Operational Use.
Other requests for this document shall be referred to Naval Facilities Engineering Service Center.

[This page intentionally left blank]

RECORD OF CHANGES

REVISION	DATE	TITLE AND/OR BRIEF DESCRIPTION	APPROVED BY

[This page intentionally left blank]

TABLE OF CONTENTS

RECORD OF CHANGES ..... A
TABLE OF CONTENTS i
LIST OF TABLES iv
FOREWORD v
8.0 CHAPTER 8 - PARTS LIST 1
8.1 INTRODUCTION 1
8.2 MAJOR FTHE SYSTEM ASSEMBLIES 1
8.3 MAINTENANCE PARTS LIST 2
8.3.1 Shipboard Maintenance Parts 2
8.3.2 Depot Maintenance Parts 8
8.3.3 Consumable Items 15
8.3.4 List of Manufacturers 15
9.0 CHAPTER 9 - MOBILIZATION 21
9.1 INTRODUCTION 21
9.2 SCOPE 21
9.3 PREREQUISITE ACTIVITIES 21
9.4 TOOLS AND TEST/SUPPORT EQUIPMENT 21
9.5 CONSUMABLE ITEMS 21
9.6 EQUIPMENT PREPARATION 21
9.6.1 Visual Inspection 22
9.7 DECK INSTALLATION 22
9.7.1 Deck Layout 22
9.7.2 Major Unit Deck Installation Sequence 23
9.7.3 Deck Installation Considerations 23
9.7.4 Major Unit Deck Mechanical Installation Procedures 25
9.7.5 FTHE System Assemblies Utility Service Connections 28
9.7.6 Umbilical Routing Procedures 43
9.7.7 Hydraulic System Start-Up Preparation 49
9.8 LOAD TEST 52
9.8.1 Static Lift Test 52
9.8.2 Dynamic Load Test 53

9.8.3 Pre-Calibration Procedures **54**
9.9 FTHE FUNCTIONAL TESTS **54**
9.9.1 Docking Head Tension **55**
9.9.2 ROV Tension **55**
9.9.3 ROV Altitude **56**
9.9.4 Bottom Keeping **57**
10.0 DEMOBILIZATION 59
10.1 INTRODUCTION **59**
10.2 TOOLS AND TEST/SUPPORT EQUIPMENT **59**
10.3 CONSUMABLE LIST **59**
10.4 FTHE REMOVAL FROM DECK **59**
10.4.1 Deck Layout **59**
10.4.2 FTHE Removal from Ship **59**
10.5 FTHE STORAGE PREPARATION **61**
10.5.1 General Maintenance Procedures **62**
10.5.2 Specific Maintenance Procedures **63**
10.6 SHIPPING CONFIGURATION **67**
10.6.1 Nominal Weights **67**
APPENDIX A – FTHE OPERATIONAL CHECKS & PROCEDURES A-1
A-1.0 Overview A-1
A-2.0 FTHE Ground Bond Testing Procedures A-1
A-3.0 FTHE Start-Up & Shut-Down Procedures A-7
A-4.0 FTHE Checks for Deploying Vehicle A-14
A-5.0 FTHE Checks for Recovering Vehicle A-15
A-6.0 FTHE Deployment Procedures A-16
A-7.0 FTHE Recovery Procedures A-17
APPENDIX B – FTHE DRAWING PACKAGE B-1
APPENDIX C – FTHE MATERIAL SAFETY DATA SHEETS C-1
APPENDIX D – FTHE COMPONENT MANUFACTURER LITERATURE D-1
ATTACHMENT 1 – FTHE TEST PLANS
ATTACHMENT 2 – FTHE ENGINEERING DOCUMENTATION

LIST OF FIGURES

Figure 9-1 FTHE Deck Layout on *M/V INDEPENDENCE* 22
Figure 9-2 FTHE Electrical Cable Paths & Connection Locations 30
Figure 9-3 HC Gas Bottle Rack 34
Figure 9-4 FTHE Hydraulic Hose Paths & Connection Locations 39
Figure 9-5 LW Prep for Umbilical Routing 44
Figure 9-6 HC Flying Head Top Compression Weldment 45
Figure 9-7 HC Lower Sheave Cable Guide Removal 45
Figure 9-8 Umbilical Route on Docking Head, J-Box Insertion 48
Figure 9-9 Installing Docking Head Overboarding Sheave 48
Figure 9-10 Cursor Assembly During Umbilical Routing 49
Figure 9-11 LCI-90 Tension Reading vs. HC System Accumulator Gas Pressure 51
Figure 9-12 A-Frame with Test Load Partially Raised Off the Deck 52
Figure 9-13 A-Frame with Test Load Raised and Latched into the Docking Head 53
Figure 9-14 A-Frame with Test Load Luffed Outboard 53

LIST OF TABLES

Table 8-1 Major FTHE System Assemblies....1
Table 8-2 Shipboard Maintenance Parts List....3
Table 8-3 Depot Maintenance Parts List....8
Table 8-4 Consumable Items List....15
Table 8-5 List of Manufacturers....15
Table 9-1 List of Activities Required Prior to Mobilizing the FTHE....21
Table 9-2 FTHE Offshore Component List....23
Table 9-3 A-Frame Assembly Rigging Equipment Requirements....26
Table 9-4 Fasteners & Specifications for Deck Installation....27
Table 9-5 FTHE Electrical Enclosure Labels and Locations....29
Table 9-6 FTHE Electrical Cable Connections....30
Table 9-7 Electronics Cabinet Subassembly Cable Connections....32
Table 9-8 HC Gas Reclamation Nitrogen Hose Connections....35
Table 9-9 Boost Accumulator Gas Pressure Charge for A-Frame Load Range....36
Table 9-10 Umbilical Winch / Levelwind Hydraulic Interconnection....39
Table 9-11 A-Frame Hydraulic Hose Interconnection....40
Table 9-12 UW & LW Upper Case Drain Fitting Locations....40
Table 9-13 Cooling Water Hose Connections....43
Table 9-14 Umbilical Winch/HPU Hydraulic System Initial Pressure Settings....50
Table 9-15 HC System Nominal Relief Pressure Settings....50
Table 9-16 LCI-90 Tension Reading vs. HC System Accumulator Gas Pressure....51
Table 10-1 FTHE Demobilization....59
Table 10-2 Storage Preparation Maintenance Tasks....61

FOREWORD

The technical manual's maintenance contractor for this manual is GPA Technologies, Inc.

This technical manual has been developed in a large part based upon the original equipment manufacturer (DYNACON - Job No. 707) technical manual, assembly drawings, and electrical and hydraulic schematics. Additional information was developed through initial operating experience by General Dynamics - Advanced Information Systems (GDAIS), where a follow-on Operation & Maintenance Manual A128297-2 was developed and submitted to NFESC with delivery of the FTHE system. In many instances, whole sections of text have been lifted from their documents and included in this work.

This FOREWORD is to provide proper credit due to previous efforts on the O&M development.

Designed and Manufactured by:

DYNACON, Inc.
831 Industrial Blvd.
Bryan, Texas 77803-2008
Telephone (979) 823-2690
Facsimile (979) 823-0947

DYNACON 707 System Procured and Tested by:

General Dynamics
Advanced Information Systems
Carolina Corporate Center
P.O. Box 26002
Greensboro, NC 27420-6002

DYNACON 1088 System Procured and Tested by:

GPA Technologies, Inc.
2368 Eastman Ave., Ste #8
Ventura, CA 93001

[This page intentionally left blank]

8.0 CHAPTER 8 - PARTS LIST

8.1 INTRODUCTION

This chapter lists the major FTHE System Assemblies, shipboard and depot maintenance parts subject to repair or replacement, and consumables required when performing corrective maintenance on the FTHE. The following information is found in this chapter:

- List of major FTHE System Assemblies (Table 8-1)
- List of major shipboard maintenance parts (Table 8-2)
- List of depot maintenance parts (Table 8-3)
- List of consumable items (Table 8-4)
- List of manufacturers and their addresses (Table 8-5)

8.2 MAJOR FTHE SYSTEM ASSEMBLIES

A list of the major FTHE System Assemblies and their serial numbers are provided in Table 8-1. For specific detailed engineering and component support literature refer to Chapter 2 - Engineering and Manufacturing Documentation.

Table 8-1 Major FTHE System Assemblies

NAME OF UNIT	SERIAL NUMBER
Umbilical Winch	**1088101-W**
Levelwind Assembly	**1088102-LW**
Electro-Hydraulic Power Unit	**1088103-EHPU**
A-Frame	707105 AFLR, 707105 AFLL
Docking Head	707106 DH
Cursor	707107 C
Heave Compensator	707108 HC
Local Control (Pedestal)	707113 LC
Remote Control (Control Van)	707114 CC

8.3 MAINTENANCE PARTS LIST

8.3.1 Shipboard Maintenance Parts

This section lists the Shipboard Maintenance Parts List, where the below matrix lists codes and their definition. The "ID TAG #" column in Table 8-2, in an effort to aid the maintainer when searching for a spare part, uses a naming convention that matches the spare part to the piece of equipment it belongs to:

CODE	DEFINITION
AF	A-Frame
CVP	Control Van Panel (Control Station – Remote)
DCV	Manual DCV Station
HC(GI)	HC Gas Intensifier
HC(HV)	HC High Voltage Enclosure (ENC8)
HC(LV)	HC Low Voltage Enclosure (ENC9)
HPU(HV)	HPU High Voltage Enclosure (ENC102)
HPU(LBC)	HPU Power Isolation Enclosure (ENC101)
HPU(LV)	HPU Low Voltage Enclosure (ENC103)
LW	Levelwind
PC	Computer
PED	Pedestal (Control Station – Local)
SI	Signal Interface Enclosure (ENC10)
UWA	Umbilical Winch Assembly

Table 8-2 Shipboard Maintenance Parts List

Item	Used On	ID/ Tag Number	Description	Manufacturer	Source Code	Part Number	Qty	Location
52	Heave Comp	CV-7, CV-8	Check Valve	SUN	SH	CKCB-XCN-ECI, FREA LAN-4.00-GPM	1	SEA-1
93	A-Frame	AC1,2	Accelerometer	Summit Industries	SI	23203A-B015-R005-T004	1	SEA-1
94	Electronic	CB6 HC(HV)	Circuit Breaker, 0.5 Amp	Siemens	SC	5SX2305-8	1	SEA-1
95	Electronic	CB7, CB8 HC(HV)	Circuit Breaker, 2 Amp	Siemens	SC	5SX2202-8	1	SEA-1
96	Electronic	CB9 HC(HV)	Circuit Breaker, 6 Amp	Siemens	SC	5SX2306-8	1	SEA-1
97	Control 2	CH1:PED, CH5: CVP	Control Handle	Sundstrand	SE2	MCH51AB-1174 KO-2992	1	SEA-1
98	Control 2	CH1,3,4	Control Handle	JR Merritt	JM	PR04-101-6032	1	SEA-1
100	HPU	F6: HC(HV)	fuse 3 Amp	Littlefuse	LC	3AG-3A, 250V	2	SEA-1
101	HPU	F2: HPU(HV)	20 Amp Fuses	Littlefuse	LC	3AG-20A, 32v	10	SEA-1
104	HC & HPU	F5: HC(LV) HPU?	Fuse, 2 Amp, 250V	Littlefuse	LC	3AG-2A, 250V	10	SEA-1
105	Heave Comp	F7: HC(LV)	Fuse, 15 Amp, 32V	Littlefuse	LC	3AG-15A, 32V	8	SEA-1
106	Heave Comp	K29: HC(LV)	Relay	Idec	IC	RH3B-UL-DC12V	0	SEA-1
118	HC/Control 2	LT13-16,21,22,34,35,36: CVP LT29 to LT33: HC(HV)	Indicator Light Bulb, 28V	Dialight	DC1	ML757	18	SEA-1
119	Control 2 & Heave Comp	LT-13,14,34: CVP LT24: HC(HV)	Green Lens	Dialight	DC1	125-1132-403	1	SEA-1
120	Control 2	LT15,16,21,22: CVP	Amber Lens	Dialight	DC1	125-1133-403	2	SEA-1
130	Heave Comp	PM2: HC(HV)	Power Monitor	Siemens	SC	3UG3063-1AR7	1	SEA-1
131	Control 1	PS1	Power Supply	Computer Products	DY	NFS110-7602	1	SEA-1
132	Control 1	PS2	Power Supply - 12/12	Power One	VI	DGP12U5D12	1	SEA-1
134	Heave Comp	PS4: HC(LV)	Converter DC-DC	Power One	AE2	DFA20E24D15	1	SEA-1
135	AF & HC	SC1: AF, SC2: HC(LV)	Signal Conditioner	API	AP	438/GDF-24VAC	0	SEA-1
136	Electronic	SC3: SI	Signal Conditioner	Dataforth	FL	DSCA39-07	1	SEA-1
137	PED	SW1, SW3: PED	Toggle Switch	MicroSwitch	HW	1TL1-7	1	SEA-1
138	Heave Comp	SW10: HC(HV)	Toggle Switch	MicroSwitch	HW	2TL1-7	1	SEA-1
139	Electronic	SW2, SW4: PED & CVP	Toggle Switch	MicroSwitch	HW	2TL1-70	1	SEA-1
140	Electronic	SW11: HC(HV)	Toggle Switch	MicroSwitch	HW	1TL1-3	4	SEA-1
142	Control 1	T2	Transformer	Acme	AE1	TA-2-81326	0	SEA-1
154	Heave Comp	SOV-20	Solenoid Valve	Delta	DV	DES2G00HC25S (Delta 85050002)	1	SEA-1
189	All	---	Varistors	Mouser Electronics		576-V130LA10AP	6	SEA-1

Item	Used On	ID/ Tag Number	Description	Manufacturer	Source Code	Part Number	Qty	Location
647	HPU "1088"		Control Handle	DYNACON		DYN-9005-10	2	SEA-1
651	winch "1088"		Contactor	Allen Bradley		100-D180ED11	1	SEA-1
655	HPU "1088"		Fuse, 1 Amp	Littlefuse		3AG-1A	5	SEA-1
657	LW "1088"		Relay	Idec		RH4B-UL-AC24V	1	SEA-1
658	HPU "1088"		Contactor	Allen Bradley		100-K12KJ10	1	SEA-1
659	LW "1088"		Relay	Idec		RH2B-UL-AC24V	1	SEA-1
660	LW "1088"		Relay	Idec		RH3B-UL-DC12V	1	SEA-1
663	HPU "1088"		NC Contact	SIEMENS		52BAJ	1	SEA-1
664	HPU "1088"		NO Contact	SIEMENS		52BAK	1	SEA-1
665	HPU "1088"		Protective Boot	SIEMENS		52AABA	2	SEA-1
666	HPU "1088"		Bias/Counterbalance Board	DYNACON		DY98003-01	1	SEA-1
667	LW "1088"		Level wind Control Board	DYNACON		DY96001-102-03	1	SEA-1
668	HPU "1088"		Phase Monitor with Socket and Hold Down Kit	Motor Saver		201-A, 0T08, 98A535	1	SEA-1
669	HPU "1088"		Power Supply	Lamda		DSP60-5	1	SEA-1
670	HPU "1088"		Power Supply	Lamda		DSP60-12	1	SEA-1
671	LW "1088"		Power Supply	Lamda		DSP10-12	1	SEA-1
672	LW "1088"		Power Supply	Lamda		DSP100-24	1	SEA-1
677	LW "1088"		Temperature Switch	Nason		HT19B45R/HR	1	SEA-1
678	LW&W "1088"		Sensor, proximity	Efector		IME 2020-FBOA	2	SEA-1
679	LW "1088"		Sensor, levelwind	DYNACON		DY97002-120-04	1	SEA-1
680	LW "1088"		Sensor, proximity	Efector		IME 3015-FNKG	1	SEA-1
683	Electronic	SC-4	Signal Conditioner, signal interface enclosure	Delta		VC2124, s/n VC24102524 & VC24102523	1	SEA-1
105A	Electronic	F1: PED, F1: CVP	Fuse, 0.5 Amp, 32V	Littlefuse	LC	"311", 32V, 5A	9	SEA-1
105C	Electronic	---	Fuse, 0.5 Amp	Littlefuse		0.5 Amp, 250V, FAST, 312	5	SEA-1
105D	Electronic	LCI display	Fuse, 0.5 Amp	Littlefuse		0.5 Amp, 250V, SLOW, GMA	3	SEA-1
146A	A-Frame	XS11	Sensor, proximity	IFM Efector	IE	IG5381 (IGA3008-ANKG)	1	SEA-1
6	Heave Comp	FB-1	Filler-Breather Cap	Flow Ezy	FE	AB-1010-3	1	SEA-2
21	A-Frame	PRV-2 / PRRV-1: HPU	Pressure Reducing Valve	SUN	SH	PBHB-LAN-HCL	1	SEA-2
47	Heave Comp	BV-17 & BV-18	Ball Valve, 1/4"NPT, 1/4 turn, 3000psi	Whitey	VF	SS-33VF4 (SS-33PF4, New)	1	SEA-2
51	Heave Comp	CV-6	Check Valve	Denison	DH	C5V12-611-B1	1	SEA-2
53	Heave Comp	CV-9	Check Valve	SUN	SH	CXHA-XCN-IAL (valve & plate)	1	SEA-2

Item	Used On	ID/ Tag Number	Description	Manufacturer	Source Code	Part Number	Qty	Location
55	Heave Comp	FCV-5, FCV-6	Flow Control Valve	Rego	RP	MF-250SBC	1	SEA-2
60	Heave Comp	NV-5	Needle Valve	Parker	PK2	N400S	1	SEA-2
61	Heave Comp		Pressure Switch	U.E.C.C.		10F12	1	SEA-2
65	Heave Comp		Pressure Switch	U.E.C.C.		10F14	1	SEA-2
67	Heave Comp	PSH-9,10	Pressure Switch	IFM Efector	IE	7000	3	SEA-2
68	Heave Comp	PSH-5,9	Pressure Switch	IFM Efector	IE	7002	0	SEA-2
76	Heave Comp		Cable, Pressure Switch	IFM Efector		E18003	1	SEA-2
77	Heave Comp	SOV-7,18	Solenoid Valve	Delta		DG-S4D-00-HC-25-S	1	SEA-2
79	Heave Comp	SOV-17	Solenoid Operated Valve	Hydraforce	HF	SV58-25-6TS-P-24AG	2	SEA-2
85	Heave Comp	CV-10 TO CV-15: HC(GI)	Check Valve	Circle Seal	CS	2349R-3PP	3	SEA-2
88	Heave Comp	PSH-7,8	Pressure Switch	Barksdale	BK	9675-3	1	SEA-2
92	Heave Comp	SOV-13,14,15,16: HC(GI)	Solenoid Valve	Circle Seal	CS	SV10T 32P4P43	0	SEA-2
146	Control 1	---	PCI Board	National Instrmnts	NI	184359C-06 PCI-7041-MZA-6040E	1	SEA-2
601	winch "1088"		Check Valve w/body	SUN		CXCD-XDN, GAL	1	SEA-2
606	winch "1088"		Shuttle Valve	SUN		CSAZ-XXN	1	SEA-2
607	winch "1088"		Check Valve	SUN		CXCD-XCN	1	SEA-2
608	winch "1088"		Pressure Reducing Valve	SUN		PBFB-LNN	1	SEA-2
609	winch "1088"		Flow Control Valve	SUN		NCEB-LCN	1	SEA-2
611	HPU & UW		Pressure Reducing Valve	SUN		PBDB-LAN	1	SEA-2
612	winch "1088"		Pressure Reducing Valve	SUN		PBFB-LAN	1	SEA-2
614	HPU "1088"		Pressure Gauge	DYNACON		DYN600WS	1	SEA-2
615	HPU		Pressure Gauge	DYNACON		DYN7500WS	1	SEA-2
616	HPU "1088"		Pressure Gauge	DYNACON		DYN3000WS	1	SEA-2
617	HPU		Pressure Gauge	DYNACON		DYN5000WS	1	SEA-2
618	HPU & UW		Pressure Gauge	DYNACON		DYN60WS	1	SEA-2
620	HPU "1088"		Check Valve w/body	SUN		CXAD-XCN, AAJ	1	SEA-2
626	HPU "1088"		Check Valve	SUN		CXFA-XCN	1	SEA-2
627	HPU "1088"		Check Valve	SUN		CXHA-XCN	1	SEA-2
628	HPU "1088"		Pressure Reducing Valve	SUN		PBHB-LAN	1	SEA-2
629	HPU	RV-1	Relief Valve	SUN		RPEC-LWN	1	SEA-2
630	HPU "1088"		Loop Flushing Valve	SUN		DSCH-XGN	1	SEA-2
631	HPU "1088"		Relief Valve	SUN		RPCC-LQN	1	SEA-2
632	HPU "1088"		Shuttle Valve	SUN		CSAX-XXN	1	SEA-2

Item	Used On	ID/ Tag Number	Description	Manufacturer	Source Code	Part Number	Qty	Location
633	HPU "1088"		Relief Valve with Body	SUN		RDBA-LSN, AEJ	1	SEA-2
637	HPU "1088"		Startup Valve with Body	SUN		NQEB-XAN, ZBS	1	SEA-2
646	HPU "1088"		Current Transducer	American Aerospace		1003AM2-200-B	1	SEA-2
648	HPU "1088"		Control Handle Boot	Sundstrand		K22078	2	SEA-2
650	HPU "1088"		Control Handle Boot	JR Merritt		14009	2	SEA-2
676	HPU "1088"		Winch Drum Encoder	Hagglunds		378 5036-801	1	SEA-2
L-17	A-Frame	SOV-5: DCV	Solenoid Valve	Delta	DV	DF-S3A-00HC-25-S	1	SEA-2
L-43	A-Frame	SHV-1: AF	Shuttle Valve	DYNACON	DY	2994369	1	SEA-2
L-51	Electronic	---	POV Flange Seal Kit	---		Many O-Rings	4	SEA-2
Tape	All	---	Tape, All Weather	Densyl		---	2	SEA-2
122	Heave Comp	MS3: HC(HV)	Contactor / Starter, 150HP w/ Overload Relay	Siemens	SC	3TF5322-OAK6 / 3RB-1257-OKM00D	1	SEA-3
205	HPU/HC		Filter, Heat Exchanger Screen	GROCO		WSA-1001	2	SEA-3
602	winch "1088"		Filter	Hydac		0660D010BH4HC	2	SEA-3
603	winch "1088"		Filter	Donaldson		P16-7186	1	SEA-3
613	winch "1088"		Solenoid Valve	Delta		DF-S3A-00-HC-25	1	SEA-3
619	HPU "1088"		Check Valve	Dunham Bush		DBCV-20-02	1	SEA-3
622	HPU "1088"		Filter	Hydac		0330D010BH4HC	2	SEA-3
623	HPU "1088"		Filter	Zinga		LE-10	2	SEA-3
624	HPU "1088"		Filter	Hydac		0240D010BH4HC	4	SEA-3
625	HPU "1088"		Filter	Donaldson		P16-5332-432-140	2	SEA-3
635	HPU "1088"		Strainer	Flow Ezy		50-1 1/2-200	4	SEA-3
641	winch "1088"	MANF-103	Servo valve with Sub plate	Moog, DYNACON		078-219C	1	SEA-3
642	winch "1088"	MANF-104	Servo valve with Sub plate	Moog, DYNACON		062F-154C	1	SEA-3
644	HPU "1088"		Proportional Electric Reducing/Relieving Valve	Hydraforce		TS10-36A-6T-N-24DG	1	SEA-3
645	HPU "1088"		Spool Valve, pilot operated	Hydraforce		EP10-S35T-8TD-N-230	1	SEA-3
681	Winch	ENC-5	pressure relief valve	Parker		HM1-05-12MP	1	SEA-3
682	Heave Comp		seal, cyl upper w/wiper	Poly Seal		37505000BLIP, D5000wiper	1	SEA-3
99	Control 1	DSP-1	Line Monitor	Measurement Technology	MT	LCI-90, s/n 707, 091	0	CAB-2
200	Electronic	---	Connector, 60Amp, 3phY, 120/208VAC	Hubbell		560P9W	0	CAB-2
201	Electronic	---	Connector, 60Amp, 3ph, 250VAC	Hubbell		460P9W	1	CAB-2
202	Control 1	---	Connector, 100Amp, 125/250VAC	Mennekes		AH4100P12W	1	CAB-2

Item	Used On	ID/ Tag Number	Description	Manufacturer	Source Code	Part Number	Qty	Location
204	Electronic	---	Receptacle, Bulkhead, 100 Amp, 125/250VAC & connector	Arrow Hart		AH4100P12W	1	CAB-2
220	Control 1	NI DAC	Circuit Board 1385663	National Instruments	NI	185681G-01	1	CAB-2
221	Control 1	NI DAC	Circuit Board 13940AD	National Instruments	NI	1875766G-01	1	CAB-2
222	Control 1	NI DAC	Circuit Board	CM		151008, CM-DA-04 v.1.0	1	CAB-2
C-1	Heave Comp	ACC-13,14	Repair Kit	Parker		50930851	1	CAB-2
L-30	Control 1	DSP-2	Line Monitor Repeater	Measurement Technology	MT	LCI-90R	1	CAB-2
A-11	Test Shape	---	Altimeter with mount	Simrad		937-20770000, s/n 9905093	---	CAB-3
A-21	Test Shape	---	Altimeter with mount	Simrad		974-70230000, s/n 0803051	---	CAB-3
EC	Test Shape	---	Electronic Canister	---		---	1	CAB-3
ECEC	Test Shape	---	Electronic Canister End Cap	---		---	1	CAB-3
ECIR	Test Shape	---	Electronic Canister Inner Rack	---		---	1	CAB-3
LVDT	Test Shape	---	Electronic Displacement Rod "LVDT"	RDR Electronic Ltd		SSD4000/321A, s/s 98943	1	CAB-3
SC4	Test Shape	---	Power Converter	Action Pak		1-43com5153	1	CAB-3
---	Heave Comp	---	Hydraulic Oil	---		---	1	Blue box
---	All	---	Lube, red, grease	Mystic		---	50	Blue box

8.3.2 Depot Maintenance Parts

This section contains the Depot Maintenance Parts List. The list is provided for completeness but corrective maintenance procedures for these parts are not provided in this document.

Table 8-3 Depot Maintenance Parts List

Item	Used On	ID/ Tag Number	Description	Manufacturer	Source Code	Part Number	Qty	Location
L-3	HC	CBV-5,7	Counterbalance Valve	SUN	SH	CBGA-LAN & HCM/S	5	DEPOT-
17	HPU	PG-3,4,5,6	Pressure Gauge	Dynacon	DY	DYN7500WS	1	DEPOT-1
19	HPU	PG-8,9,10	Pressure Gauge	Dynacon	DY	DYN5000WS	6	DEPOT-1
24	HPU	RV-1	Relief Valve	SUN	SH	RPEC-LWN-FEJ/S	1	DEPOT-1
32	various	TSH-1,2,3,4,5,6	Temperature Switch	Barksdale		ML1H-H202S	1	DEPOT-1
133	HC	PS3	Power Supply	Siemens	SC	6EP1334-2BA00	1	DEPOT-1
141	Control 1	T1 & T3	Transformer	Acme	AE1	TA-2-81213	1	DEPOT-1
142	Control 1	T2	Transformer	Acme	AE1	TA-2-81326	1	DEPOT-1
143	Control 1	T4	Transformer	Acme	AE1	TA-2-81325	1	DEPOT-1
147	Control 1	CCA1: PC	PCI Board	National Instruments	NI	185214E-05 PCI-7030-6030E	1	DEPOT-1
148	Control 1	MODEL ACE-925A	Power Supply	Cyber Research	CR	PWR 925A	1	DEPOT-1
150	Control 1	20 GB	Hard Drive	Cyber Research	CR	MSI-HDI WD200	1	DEPOT-1
151	Control 1	CCA3: PC	PCI Board	National Instruments	NI	185681C-01 CCA-PCI 6527	1	DEPOT-1
155	All	Most SOV	Solenoid, #3GS66	Delta Power		D-HC-25	4	DEPOT-1
162	Power	---	Receptacles	Cooper		AJ67 2"	1	DEPOT-1
182	Electronic	---	PCI Board	National Instruments	NI	188654A-01 CCA,PCI-7041 I/O BOARD	1	DEPOT-1
622	HPU 1088		Filter	Hydac		0330D010BH4HC	1	DEPOT-1
CB-1	All	SOV	Solenoid Connector, 4 Wire Cable 12'	---		---	5	DEPOT-1
CB-2	All	SOV	Solenoid Connector, 3 Wire Cable 12'	---		---	3	DEPOT-1
CB-3	Electronic	---	Wire, 16ACW	---		SPEC 474 CABLE, FTINU-3	6	DEPOT-1
CB-4	Electronic	---	Wire, 18AWG/4	---		E54661, AWM, 20327,	3	DEPOT-1
E-1	Electronic	---	Wrap, 1-1/4 "	Flexo Wrap		FWN 1.25 BK 25FT	1	DEPOT-1
E-2	Electronic	---	Wire, 20AWG	Carol		C2524AE111240S Wire or AWM 2092	1	DEPOT-1
E-3	Electronic	---	Wire, 22AWG	Olympic Wire		307-8 22AWG	1	DEPOT-1
E-4	All	Most SOV	Connector Spacers	Hirschmann		730801-002	100	DEPOT-1
E-5	Electronic	---	Connecter Kits	ITT Cannon		71468	2	DEPOT-1

E-6	All	Most SOV	Connectors	Hirschmann		5100 1080000 14AGDM	10	DEPOT-1
H-1	HC	PX-1,2,3	Pressure Transducer	Data Instruments/Honeywell		XP05KPS1C1G	2	DEPOT-1
HBL	All	---	Water Proof Cable Fitting, 1/2"	---		Generic	9	DEPOT-1
L-30	Control 1	DSP-2	Line Monitor Repeater	Measurement Technology	MT	LCI-90R	1	DEPOT-1
N-1	HC	---	Nitrogen Compressor Cooling hose w/fins	Bauer		0 76980	1	DEPOT-1
N-2	HC	---	Nitrogen Compressor Cooling hose w/fins	Bauer		0 76981	1	DEPOT-1
N-3	HC	---	Nitrogen Compressor Cooling hose w/fins	Bauer		0 76982	1	DEPOT-1
N-4	HC	---	Nitrogen Compressor Cooling hose w/fins	Bauer		0 76983	1	DEPOT-1
RC-1	All	---	Cable Repair Sleeve	Raychem		Q60536	5	DEPOT-1
RC-2	All	---	Cable Splicing Kit	3M		Scotch cast 82-F2	1	DEPOT-1
Tape	All	---	Tape, All Weather	Densyl		1 Case, Various Width	4	DEPOT-1
32	various	TSH-1,2,3,4,5,6	Temperature Switch	Barksdale	BK	ML1H-H202S	1	DEPOT-2
50	HC	CP-3	Coupling	Rotex	DY	---	1	DEPOT-2
58	HC	LG-2	Level Gauge (Alum)	Lube Devices	LD	G617-12-B-1	1	DEPOT-2
59	HC	LS-2, 1	Level Switch	Gems	GS	30288	1	DEPOT-2
62	HC	PG-14	Pressure Gauge	Dynacon	DY	DYN600WS	1	DEPOT-2
64	HC	PR-1	Pressure Regulator	Haskell	DY	PR22A11A3C111	1	DEPOT-2
67	HC	PSH-9,10	Pressure Switch	IFM Efector	IE	7020	0	DEPOT-2
70	HC	RV-4,5	Relief Valve (Spring)	Swagelok [Nupro?]	VF	117-R3A-K1-F	0	DEPOT-2
72	HC	RV-6	Relief Valve	SUN	SH	RPIC-LAN & IAN	1	DEPOT-2
73	HC	RV-11	Relief Valve	SUN	SH	RPEC-LEN-FAJ	1	DEPOT-2
77	HC	SOV-7,18	Solenoid Valve	Delta	DV	DG-S4D-00-HC-25-S	0	DEPOT-2
80	HC	STR-5	Suction Strainer	Zinga	ZI	SS-400-0-0	2	DEPOT-2
84	HC	BV-25, BV-26	Ball Valve	Swagelok	VF	SS-45F8	2	DEPOT-2
163	Power	---	Receptacles	Cooper		AR1042	1	DEPOT-2
186	HC	SVV-2	Connector Assembly	---		KPT00F14-A71	1	DEPOT-2
187	HC	---	Servo Valve Refurbished	Moog		D664-372K	1	DEPOT-2
BX-1	All	---	O-Rings	---		C-LS4844	6	DEPOT-2
C-1	HC	CYL-13,14	Seal, Piston and Cylinder	Parker		50930851	1	DEPOT-2
L-29	HC	SVV-2	---	German DCV (Parker)		DIDW69B9NJP	1	DEPOT-2
L-32	HC	BV-32	Ball Valve, Stainless	Swagelok		SS-44F4	1	DEPOT-2
L-44	A-Frame	Cursor Shaft	I-Gluide Polyemer Bushing	iGUS		TFI-3235-32	0	DEPOT-2

L-48	Electronic	---	Hardware	Gerrert		1139675 M12-1.75x75 12.9SHCS	0	DEPOT-2
6	HC	FB-1	Filler-Breather Cap	Flow Ezy	FE	AB-1010-3	1	DEPOT-3
10	HC	HX-1,2	Anode, Zink	American Indust Heat Transfer	PHMS	301-0003	0	DEPOT-3
56	HC	FL-12	Filter	Zinga	ZI	LE-10	2	DEPOT-3
57	HC	HP-4	Hydraulic Pump	Barnes	BH	G20W-2-X15V1B12A61	1	DEPOT-3
66	HC	PRV-4,5	Pressure Reducing Valve	SUN	SH	PBDB-LAN & ECH	2	DEPOT-3
81	HC	STR-6	Suction Strainer	Zinga	ZI	SS-120-0-0	2	DEPOT-3
152	HC	FL-14	Filter	Hydac		0660D005BN4HC	4	DEPOT-3
165	HC	FL-15,16	filter, nitrogen	Donaldson		P165041	6	DEPOT-3
168	Generator	Quinn	Radial Seal Filter	CAT		6I 2510 AIR FILTER	3	DEPOT-3
501	winch 1088	---	duct, flexable	Americ		Bag-0-duct-1225	1	DEPOT-3
11A	All	11A	O-Rings	Parker		---	1	DEPOT-3
A1	A-Frame	DCV-1	Stack Valve for A-Frame	Hawe		(Big Alpha/Numeric String)	1	DEPOT-3
BR	A-Frame	---	Cursor Latch Arm Bearing	iGUS		TFI-3235-32	1	DEPOT-3
COM-1	Test Shape	---	Compensator Assembly	---		Compensator Assembly	1	DEPOT-3
DCV-2	A-Frame	DCV-2	Directional Control Valve	Danfoss		1576906	1	DEPOT-3
L-10	A-Frame	NV-1	Needle Valve	SUN	SH	NFFC-LGN/LAM/S	1	DEPOT-3
L-13	A-Frame	PRV-2	Pressure Reducing Valve	SUN	SH	PBDB-LAN & ECI	1	DEPOT-3
L-15	A-Frame	RV-2,3	Relief Valve	SUN	SH	RPGC-LAN & CAM	2	DEPOT-3
L-18	A-Frame	DCV-1	DCV Seal Kit	Hawe	DY	DS7700-52	3	DEPOT-3
L-19	A-Frame	DCV-1	DCV Seal Kit	Hawe	DY	DS7700-32	2	DEPOT-3
L-20	A-Frame	DCV-1	DCV Seal Kit	Hawe	DY	DS7700-51	1	DEPOT-3
L-21	A-Frame	DCV-1	DCV Seal Kit	Hawe	DY	DS7700-31	1	DEPOT-3
L-22	A-Frame	HM-4,5	Cursor Winch Motor	Rexroth	BR	A2FE90/61W-NZL01	1	DEPOT-3
L-23	A-Frame	Cursor Latch	Latch Indicator Cable	Cable Craft	TC	184-LTT-2-42"	1	DEPOT-3
L-24	A-Frame	Cursor Latch	Latch Indicator Cable	Cable Craft	TC	184-LTT-2-58"	1	DEPOT-3
L-25	A-Frame	Cursor Latch	Latch Indicator Cable	Cable Craft	TC	184-LTT-2-80"	1	DEPOT-3
L-26	A-Frame	Cursor Latch	Latch Indicator Cable	Cable Craft	TC	184-LTT-2-115"	1	DEPOT-3
L-27	A-Frame	Docking Head	Shock Absorber	NAPA/Monroe	LN	65404	4	DEPOT-3
L-5	A-Frame	CPRV-1	Cross Port Relief Valve	SUN	SH	RPIE-LWN-YIN/S	2	DEPOT-3
L-7	A-Frame	CYL-3,4,5,6	Docking Head Swing Cylinder	Parker	PK2	4:CBB-2HLTS24A X 30"	0	DEPOT-3
L-8	A-Frame	CYL-7,8,9,10,17,18,19,20	Docking Head Latch Cylinder	Martner	DY	BMC-1502	3	DEPOT-3
36	A-Frame	FY05MM4331-Zero Press	Hose Assembly, A Frame Interconnect	Dayco	PK1	MX20-BW20-20FJ-20FJ (480") (40ft)	1	DEPOT-4
37	A-Frame	FY05MM4318-LARS Press	Hose Assembly, A Frame Interconnect	Dayco	PK1	CE20-BW20-20FJ-20FJ (480") (40ft)	1	DEPOT-4

38	A-Frame	FY05MM4329-Return	Hose Assembly, A Frame Interconnect	Dayco	PK1	MX16-HY16-16FJ-16FJ (480") (40ft)	1	DEPOT-4
36X	A-Frame	FY05MM4345	Hose Assembly, A Frame	Dayco		345	1	DEPOT-4
38A	Electronic	FY05MM4961	Hose Assembly	Dayco		F721TC0606-16-16-16-48 (4ft)	1	DEPOT-4
39A	Electronic	FY05MM44xx	Hose Assembly	Dayco		NH24-BW24-24FJ-24FJ(144")(12ft)	2	DEPOT-4
41A	Electronic	FY05MM43xx	Hose Assembly	Dayco		MX16-HY16-16FJ-16FJ (144in)(12ft)	1	DEPOT-4
8	HC	FL-1,2,3,4,8,9,10,11	Filter	Donaldson	DC	P164166 [P16-4174?]	6	DEPOT-5
161	A-Frame	POV-1	Pilot Operated Valve	Compact Controls	DY	CP713-1-B-16S-C-150-S2	1	DEPOT-5
167	Generator	Quinn	Radial Seal Filter	CAT		6I 2509 AIR FILTER	3	DEPOT-5
169	FILTER CART	FILTER CART	Filter	PARKER		927584 WR RN	1	DEPOT-5
170	Filter Cart	Filter Cart	Filter	Parker		924450 10C ON	1	DEPOT-5
171	Filter Cart	Filter Cart	Filter	Donaldson		P169553	5	DEPOT-5
638	LW 1088		Split Nut Acme, 3 3/4 - 1 1/2 Acme	DYNACON		M721XL-2006-11	2	DEPOT-5
639	winch 1088		Brake Pads	Dellner		319771-2	1	DEPOT-5
640	winch 1088		Brake Pads	Dellner		319237-2	1	DEPOT-5
169B	Filter Cart	Filter Cart	Filter	Donaldson		P169555	6	DEPOT-5
170B	Filter Cart	Filter Cart	Filter	Donaldson		P169553	4	DEPOT-5
46	HC	BV-33	Ball Valve	Nibco		580-70	1	DEPOT-6
47	HC	BV-17 & BV-18	Ball Valve, 1/4"NPT, 1/4 turn, 3000psi	Whitey	VF	SS-33VF4 (SS-33PF4, New)	2	DEPOT-6
48	HC	BV-19 & BV-30	Ball Valve	Swagelok	VF	SS-44F6	1	DEPOT-6
54	HC	FB-2	Filler-Breather	Vescor	VC	5227	1	DEPOT-6
61	HC		Pressure Switch	U.E.C.C.		10F12	1	DEPOT-6
63	HC	PG-19	Gauge, 30psi	McMaster Carr	MM	3850K3	1	DEPOT-6
65	HC		Pressure Switch	U.E.C.C.		10F14	1	DEPOT-6
69	HC	RV-4,5	Relief Valve (Body)	Swagelok [Nupro?]	VF	SS-4R3A5	2	DEPOT-6
71	HC	RV-4,5,7,8,9,10	Relief Valve (Vent Protector)	Swagelok [Nupro?]	VF	SS-MD-4	4	DEPOT-6
74	HC	RV-12	Relief Valve	Circle Seal	CS	D559B-6M-15	1	DEPOT-6
75	HC	SG-2	Level Gauge	Lube Devices	LD	LSP-151-06-02	1	DEPOT-6
76	HC		CABLE, PRESSURE SWITCH	IFM Efector		E18003	1	DEPOT-6
78	HC	SOV-9,10,11,12,19	Solenoid Valve	Delta	DV	DF-S3A-00HC-25-S	2	DEPOT-6
86	HC	NV-3,4	Needle Valve	Whitey	VF	SS-1RF4	1	DEPOT-6
89	HC	RV-7,8,9,10	Relief Valve (valve)	Swagelok [Nupro?]	VF	SS-4R3A5-F	2	DEPOT-6
90	HC	RV-7,8,9,10	Relief Valve (Spring)	Swagelok [Nupro?]	VF	177-R3A-K1-F	4	DEPOT-6

164	Docking Head	---	Seal, oil	JC Clipper		14133LUP	4	DEPOT-6
173	All	---	Cotter Pins, 1/8 X 1.5, s/s	---		98355A150	10	DEPOT-6
174	All	---	Cotter Pins, 3/16 X 3, s/s	---		Generic	20	DEPOT-6
175	HC	---	Roller Bearing	Torrington		HJ-14817848	0	DEPOT-6
176	HC	---	Bearing Ring	Torrington		IR-12814848	0	DEPOT-6
180	A-Frame	---	Light Fixture with Mount, marine grade	North Star Lighting		SFM474H120H-PL	2	DEPOT-6
181	A-Frame	---	Light Bulb Metal Halide 250Watt	Phillips		MH250/U	4	DEPOT-6
185	Control 1	---	Flat Panel Monitor, 19" NEMA	CyRAQ		CyRAQ 19C Series Display	1	DEPOT-6
500	HC	GB-1 THRU 11	Ball Valve	DynaQuip		VMB2-A9 X 1/4 VALVE	1	DEPOT-6
202X	All	---	Pressure Plug	SUN		XNOA XXN	3	DEPOT-6
L-1	A-Frame	CBV-2	Counterbalance Valve	SUN	SH	CBCA-LAN & YEJ	1	DEPOT-6
L-12	A-Frame	PRRV-4	Pressure Reducing / Relieving	SUN	SH	PPDB-LBN & ECI	1	DEPOT-6
L-14	A-Frame	PRV-3	Pressure Reducing Valve	SUN	SH	PBDB-LBN & ECI	1	DEPOT-6
L-2	A-Frame	CBV-3,4	Dual Counterbalance Valve	SUN	SH	CBEA-LAN	5	DEPOT-6
L-32	HC	BV-30	Ball Valve, Stainless	Swagelok		SS-44F4	1	DEPOT-6
L-4	HC	CBV-6,8	Counterbalance Valve	SUN	SH	CBGH-LJN & HCM/S	5	DEPOT-6
L-42	HC	HPU Pump Filters	Filter Pressure Indicator	Donaldson	DC	P166603	1	DEPOT-6
L-46	HC	ACCUM	Repair Kit	Parker		46807D0099	3	DEPOT-6
203bp	Electronic	---	Receptacle, Bulkhead, pin, 200Amp, 600VAC	Pyle-National		mod. 1	1	Drawer 10
203bs	Electronic	---	Receptacle, Bulkhead, socket, 200Amp, 600VAC	Pyle-National		mod. 1	1	Drawer 10
203p	Electronic	---	Connector, pin insert, 200Amp, 600VAC	Pyle-National		mod. 1	1	Drawer 10
203s	Electronic	---	Connector, socket insert, 200Amp, 600VAC	Pyle-National		mod. 1	1	Drawer 10
98	Control 2	CH2,3,4: PED	Control Handle	JR Merritt	JM	PR04-101-6032	2	Drawer 7
COM-1	Test Shape	---	Compensator Assembly	---		Compensator Assembly	1	HAZMAT
	A-Frame	BV-6,7,8	Ball Valve	Worcester		3/4H446YBSE		
	A-Frame	GB-4,5	Gear Box	O&K		F55/148/XX/MB		
	A-Frame	SHV-1	Shuttle Valve	Grenson		ASH-06-2		
	HC	ACC-3	Accumulator Seal Kit	Parker		---		
	HC	CYL-15,16	Ball Valve Actuation Cylinders	Martner		BMX-1506		
	HC	POV-2,3	Pilot Operated Valve	Zaytran		TVNRO-3200		
	HC	POV-4	Pilot Operated Valve	Zaytran		TVNRC-3200		
	HC	RV-13	Relief Valve	Rexroth		DBDH 6G1X/315/12		
	HC	BV-9,11	Ball Valve, 3"	Stauff		BBVF27480001M		
	HC	BV-10	Ball Valve, 1"	Stauff		BBV21160001		

45	HC	BV-12 to 16,20,22 to 29, BV-TF, BV-GB1 & GB2	Ball Valve, 1/2"NPT, 1/4 turn, 3600psi	Warren	MM			
49	HC	BV-31	Ball Valve, 1/2"NPT, 3-Way, 1/4 turn	Swagelok	VF	SS-44XER-2C		
	HC	BV-32	Ball Valve	Swagelok				
82	not used							
91	not used							
40	HC	TD-1,4	Transducer, 48 inch	Tempsonic	WP	RHT0480UR251A01	1	---
L-38	HC	TD-2,3	Transducer 62 inch	Tempsonic	WP	RHT0620UR251A01	2	---
604	winch 1088		Level wind Hydraulic Motor	Charlynn		112-1060	1	---
621	---		Spider	Rotex		502-075100-0002	1	---
636			Strainer	Zinga		SS-300-0-0	2	---
643	HPU 1088	SOV-105,106	Solenoid Valve	Hydraforce		SV58-24-6-TD-P-24AG	1	---
649	HPU 1088		Control Handle	JR Merritt		PRO412014	1	---
661			Switch, oil level	DYNACON		DYN-9005-02	1	---
662			Relay, overload	Allen Bradley		193-EEJF	1	---
673			Pressure Switch	United Electric		10F12M511	2	---
674			Pressure Switch	United Electric		10F14M511	2	---
675			Diamond Screw Encoder	Dynapar		HR62510240J01	1	---

[This page intentionally left blank]

8.3.3 Consumable Items

A list of the consumable items required to perform troubleshooting, corrective maintenance, mobilization, and demobilization procedures for the FTHE is provided in Table 8-4. These consumable items are not supplied with the FTHE but are identified to aid in the required maintenance of the FTHE.

Table 8-4 Consumable Items List

DESCRIPTION	MODIFIER	QTY	PURPOSE
Workman's Gloves	Water/Oil Resistant	AR	Maintenance
Towels	Disposable, Box	AR	Maintenance
Oil Absorbent Pads	16" x 20", Box of 50	AR	Maintenance
Tie Wraps	12", 24", and 31" Sizes	AR	Maintenance
Shock Cord Tie-Downs	Assorted Lengths, 12" to 36"	10 each	Maintenance
Grease Fitting Cap	McMaster-Carr (PN 1098K14)	1 Pkg. (100 per)	Maintenance
Desiccant Bag	McMaster-Carr (PN 2189K18)	1 Pkg. (5 per)	Long Term Storage

8.3.4 List of Manufacturers

The "Source Location Codes" which appear in Table 8-2 and Table 8-3 are listed in alphabetical order (Table 8-5) and map appropriately to a list of manufacturers and their addresses.

Table 8-5 List of Manufacturers

MFG. LOCATION CODE	NAME/ADDRESS
AE1	ACME Electric 4815 West 5th Street, Lumberton, NC 28358 Phone: 800-334-5214 Fax: 910-739-0024
AE2	Allied Electronics Los Angeles, CA www.alliedelec.com Phone: 800-433-5700
AP	Absolute Process Instruments, Inc. 1220 American Way, Libertyville, IL 60048 Phone: 800-942-0315 or 847-918-3510
BH	Barnes Hydraulic Pumps (Hydraulic Systems Division, Haldex Group) 300 International Parkway, Sunrise, FL 33325 Phone: 800-432-6413
BK	Barksdale, Inc. 3211 Fruitland Ave., Los Angeles, CA 90058-0843 www.barksdale.com Phone: 800-835-1060 Fax: 323-589-3463

Table 8-5 List of Manufacturers - *continued*

MFG. LOCATION CODE	NAME/ADDRESS
BR	Bosch Rexroth Corporation 5150 Prairie Stone Parkway, Hoffman Estates, IL 60192
CR	Cyber Research, Inc. 25 Business Park Drive, Branford, CT 06405 www.cyberresearch.com Phone: 800-341-2525
CS	Circle Seal Controls, Inc. 2301 Wardlow Circle, Corona, CA 92880 www.circle-seal.com Phone: 951-270-6200
DC1	Dialight Corporation (Roxboro Manufacturing Plant) 315 Industrial Drive, Roxboro, NC 27573 www.dialight.com
DC2	Donaldson Company, Inc. P.O. Box 1299, Minneapolis, MN 55440 www.donaldson.com
DY	Dynacon, Inc. 831 Industrial Blvd., Bryan, TX 77803 Phone: 979-823-2690
DH	Denison Hydraulics Inc 14249 Industrial Parkway, Marysville, OH 43040 Phone: 937-644-3915 www.denisonhydraulics.com
DV	Delta Valve USA 857 West, South Jordan Parkway, Suite 100 South Jordan, UT 84095 www.deltavalve.com
FE	Flow Ezy Filters Phone: 800-237-0165 www.flowezyfilters.com
FL	FLW 3505 Cadillac Ave - Bldg E, Costa Mesa, CA 92626 Phone: 714-751-7512 www.flw.com
GS	Gems Sensors Inc. One Cowles Road, Plainville, CT 06062-1198 Phone: 800-378-1600 www.gemsensors.com
HF	HYDRAFORCE, Inc. 500 Barclay Blvd., Lincolnshire, IL 60069 Phone: 800-682-6875

Table 8-5 List of Manufacturers - *continued*

MFG. LOCATION CODE	NAME/ADDRESS
HS	Hamilton Sundstrand Corporation 1 Hamilton Rd., Windsor Locks, CT 06096-1010 Phone: 860-654-6000 Fax: 860-654-2399
HW	Honeywell Sensing & Control 11 West Spring St., Freeport, IL 61032 Phone: 800-537-6945 Fax**:** 815-235-6545 www.honeywell.com/sensing/tr
IC	IDEC Corporation 1175 Elko Drive, Sunnyvale, CA 94089-2209 www.idec.com Phone: 800-262-4332
IE	IFM Efector, Inc. 805 Springdale Drive, Exton, PA 19341 Phone: 800-441-8246 Fax: 800-329-0436
JM	J.R. Merritt Controls, Inc. 55 Sperry Ave., Stratford, CT 06615 www.jrmerritt.com Phone: 800.333.JRMC
LC	Littlefuse Corp. 800 East Northwest Highway, Des Plaines, IL 60016 www.littlefuse.com Phone: 847-824-1188
LD	Lube Devices, Inc. 1864 Nagle Ave., P.O. Box 1810, Manitowoc, WI 54221 Phone: 920-682-6877 Fax: 920-684-7210
LN	Local NAPA Auto Parts Store
MC	Magnatrol Valve Corporation P.O. Box 17, Hawthorne, NJ 07507 www.magnatrolcom Phone: 973-427-4341
ME	Marshall Engineered Products Company 3056 Walker Ridge Drive, Suite C, Grand Rapids, MI 49544 www.mepcolk.co Phone: 800-516-2321
MG	Moog Inc. Industrial Controls Division 300 Jamison Road, East Aurora, NY 14052 USA www.moog.com Phone: 800-272-6664 Fax : 716 687 7910
MM	McMaster-Carr 9630 Norwalk Blvd., Santa Fe Springs, CA 90670-2932 Phone: 562-692-5911

Table 8-5 List of Manufacturers - *continued*

MFG. LOCATION CODE	NAME/ADDRESS
MT	Measurement Technology NW 4211 24th Avenue West, Seattle, WA 98199 www.mtnw-usa.com Phone: 206-634-1308 Fax: 206-634-1309
NI	National Instruments Corporation 11500 N Mopac Expressway, Austin, TX 78759-3504 www.ni.com
OS	O'Donnell South 20300 South Vermont Ave., Suite 245, Torrance, CA 90502 Phone: 310-781-2255 Fax: 310-781-9174
PK1	Parker - Hose Products Division 30240 Lakeland Blvd. Wickliffe, OH 44092 Phone: 440-943-5700 Fax: 440-943-3129
PK2	Parker Product Information Center 8940 Tyler Blvd., Mentor, OH 44060 www.parker.com Phone: 800-272-7537
RH	Rineer Hydraulics 331 Breesport, San Antonio, TX 78216 Phone: 210-341-6333 Fax: 210-341-1231
RP	Rego Products 100 Rego Drive, Elon College, NC 27244 Phone: 336-449-7707 Fax: 336-449-6594
SC	Siemens Corporation - Citicorp Center 153 East 53rd Street, New York, NY 10022-4611 www.usa.siemans.com
SE1	State Electric 1977 Congressional Dr., St. Louis, MO 63146 www.state-electric.com Phone: 866-354-0063
SE2	Sunstrand Electric Company, Inc. 1616 Berkley Street, Elgin, IL 60123 www.sunstrand.com Phone: 847-742-0266
SH	Sun Hydraulics Corporation 1500 West University Parkway Sarasota, FL 34243 www.sunhydraulics.com Phone: 941-362-1200
SI	Summit Industries, Inc. 4545 Gateway Circle Dayton, OH 45440-1711

Table 8-5 List of Manufacturers - *continued*

MFG. LOCATION CODE	NAME/ADDRESS
TC	Tuthill Corporation 8500 South Madison, Burr Ridge, IL 60527 Phone: 630-382-4900 Fax: 630-382-4900
VC	Vescor Corporation 50 North River Street, South Elgin, IL 60177 Phone: 847-742-7270
VF	Ventura Fluid System Technologies, Inc 325 Balboa Circle, Camarillo, CA 93012 www.swagelok.com/ventura Phone: 805-384-1060 Fax: 805-384-1060
VI	Varigon Inc. Westlake Village, CA www.varigoninc.com Phone: 818-735-5494 Fax: 818-735-5499
VV	Vonberg Valve, inc. 3800 Industrial Avenue, Rolling Meadows, IL 60008-1085 www.vonberg.com Phone: 847-259-3800
WP	West Coast Plastics Equipment, Inc. 6122 W. Washington Blvd., Culver City, CA 90232 www.westcoastplastics.com Phone: 800-392-8569 Fax: 310-837-4947
WS	Westburne Supply 726 Cacique St., Santa Barbara, CA 93103 Phone: 714-491-0992 Fax: 805-962-0622
ZI	Zinga Industries Inc. 2400 Zinga Drive, Reedsburg, WI 53959-9450 Phone: 608-524-4200 Fax: 608-524-4220

[This page intentionally left blank]

9.0 CHAPTER 9 - MOBILIZATION

9.1 INTRODUCTION

This chapter describes the prerequisite activities, unpacking/unloading/inspecting operations, tools and test/support equipment, and installation procedures for mobilizing FTHE system on M/V INDEPENDENCE. It describes the electrical, hydraulic, and pneumatic considerations in this endeavor and lists various initial pressure settings/readings for the FTHE. It also lists the recommended parts and specifications required for deck installation.

9.2 SCOPE

Mobilization of the FTHE is to be conducted only at dockside in a harbor or in protected waters where support services for lifting equipment and utilities will be available for this effort.

9.3 PREREQUISITE ACTIVITIES

A list of the items that must be accomplished prior to mobilizing is provided in Table 9-1.

Table 9-1 List of Activities Required Prior to Mobilizing the FTHE

ACTIVITY	QTY	PURPOSE	WHEN
Install the FTHE Control Computer Hardware in Electronics Cabinet	1 Cabinet	Installation is easier if done prior to mobilization	1 month prior to mobilization
Order Nitrogen	11 Bottles	9 for Bottle Rack plus 2 spares	1 week prior
Inspect Shipboard Spares	2 Boxes	Verify items and quantity	3 months prior
Test Hydraulic Oil	2 Kits	Check the quality of the hydraulic oil in the HPU and the Heave Compensator – Replace if tests indicate replacement is necessary	2 months prior (NOTE: This is not required during the initial installation)
Order Hydraulic Oil (AR)	550 gallons	Replacement oil (if required)	1 month prior
Assemble Dunnage	As Required	12 x 12 timber blocks 3 feet long to support A-Frame during assembly	1 month prior

9.4 TOOLS AND TEST/SUPPORT EQUIPMENT

A list of tools and test/support equipment required to perform troubleshooting, corrective maintenance, mobilization, and demobilization procedures for the FTHE is provided in Volume I, Table 7-1. Spare Parts determined appropriate for supporting at-sea operations is packaged in SEA 1 & 2 boxes, where updates are kept current with laminated lists in each box.

9.5 CONSUMABLE ITEMS

A list of the consumable items required to perform troubleshooting, corrective maintenance, mobilization, and demobilization procedures for the FTHE is provided in Table 8-4.

9.6 EQUIPMENT PREPARATION

This section describes the equipment preparation procedures that apply to the FTHE.

9.6.1 Visual Inspection

Inspect all equipment for handling damage that would inhibit the successful operation of the equipment. Inspect all hose fittings (hydraulic, nitrogen, and water) to be clean and in good condition (including gaskets/o-rings where applicable) prior to connecting to appropriate equipment. Inspect all electrical cable connectors for bent, missing, or corroded pins and then repair/replace as necessary. Perform a fresh water wash down of FTHE system to remove any dust and dirt that accumulated during storage period. Perform corrective action as required before installation. Clean any rust from cylinder rods with a Scotch-Brite pad.

9.7 DECK INSTALLATION

The FTHE System was modified by NFESC to suite operations from M/V INDEPENDENCE, where a few enclosures were relocated on the equipment in order to optimize operational effectiveness with the deck layout space available.

Installation on M/V INDEPENDENCE deck is accomplished with the following general tasks:

- Move the FTHE system from storage location at Building 1394 to mobilization dock area, arranged to best support crane lifting operations for load-out sequence.
- Mark the deck for accurate location of major equipment corners prior to load-out.
- Lift the FTHE major components onto the deck in proper location (see Figure 9-1 Deck Layout) and then secure the components to the deck following guidance from Table 9-4.
- Complete all required hydraulic, pneumatic, and electrical system connections.
- Perform all inspections and start-up procedures to ensure proper operational readiness.

9.7.1 Deck Layout

The FTHE deck layout for M/V INDEPENDENCE is shown in Figure 9-1.

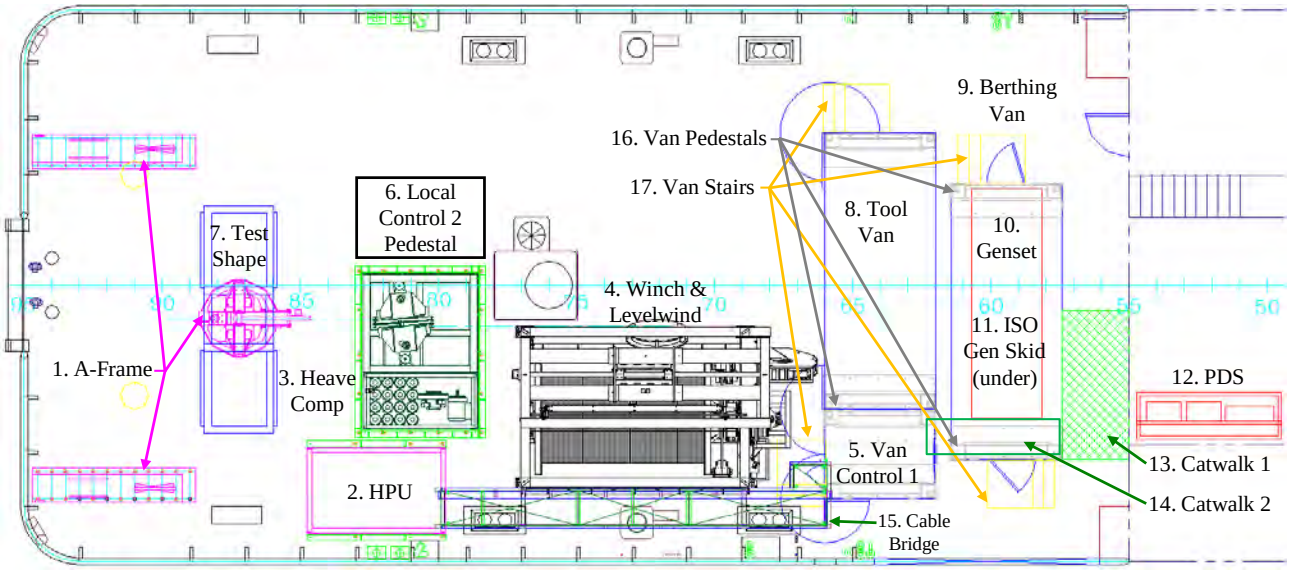

Figure 9-1 FTHE Deck Layout on *M/V INDEPENDENCE*

9.7.2 Major Unit Deck Installation Sequence

Equipment loaded onto the deck is installed in three groups in the following sequence:

1. Control Vans
2. FTHE
3. Vehicles and Packages

   Major items required for mobilization onto the M/V INDEPENDENCE vessel are identified in Table 9-2, with equipment locations shown in Figure 9-1 Deck Layout and the items numbered to correspond to Figure 9-1.

Table 9-2 FTHE Offshore Component List

ITEM	EQUIPMENT	SIZE	WEIGHT
1.	A-Frame (with catwalk & braces)	142” L x 320” W	71,000 lbs
2.	Hydraulic Power Unit (HPU)	121” L x 87” W	13,350 lbs
3.	Heave Compensator (HC)	108” L x 75” W	36,000 lbs
4.	Umbilical Winch (UW) & Level Wind (LW)	146” L x 258” W	110,000 lbs (w/ umbilical)
5.	Control 1 Van	95.5” L x 77” W	4,000 lbs
6.	Local Control 2 Pedestal Booth	100” L x 57” W	4,800 lbs
7.	Test Shape	197” L x 59” W	11,700 lbs (empty) 42,000 lbs (max)
8.	Tool Van (LVV)	240” L x 96” W	12,000 lbs
9.	Berthing Van	240” L x 96” W	19,000 lbs
10.	Genset (CAT Model XQ400-3456)	200” L x 61” W	20,000 lbs
11.	Genset ISO skid	240” L x 96” W	3,200 Lbs
12.	Power Distribution System (PDS)	126” L x 41” W	800 lbs
13.	Catwalk 1 (01 Level to Genset Skid)		
14.	Catwalk 2 (Genset Skid to Control 1)		
15.	Cable Bridge (with cable & hose)	346” L x 60” W	4,000 lbs
16.	Van Pedestals	98” L x 30” W	1,300 lbs/pair
17.	Van Stairs	58” L x 36” W	430 lbs/each

9.7.3 Deck Installation Considerations

The FTHE System general installation procedures should be accomplished with the same basic considerations for each major unit as indicated in the succeeding paragraphs.

CAUTION

The crane used to place the system components on the deck should have a lifting capacity rating sufficient to lift each component in accordance with operational requirements.

CAUTION

It is recommended that a spreader bar be used with hoist apparatus when lifting the storage winch in order to prevent lift lines from contacting and possibly damaging flange surface areas.

NOTE

Prior to lifting the system components and placing them on the ship's deck, it is desirable to attach tag lines to corners of the component frame to provide a greater degree of handling control and accurate positioning. Tag lines should be of sufficient length to allow handlers to remain clear of the component.

9.7.3.1 General Lifting Recommendations

1. Attach a lifting sling and/or spreader bar assembly to the desired component base frame.
   - Connect a crane lifting hook to the lifting sling and/or spreader bar.
   - Position the assembly over the top of the component frame. Lower the assembly to a level that will permit lift lines to be connected to each lifting eye.
   - Connect the lift lines to the corresponding lifting eyes on the component frame.

WARNING

All personnel both on deck and ashore should stand clear of system components during hoist operations.

2. Slowly raise the lifting sling and/or spreader bar assembly until the wire rope legs become taut and all slack is removed.
3. Lift the component winch several inches off the shipping surface and check the integrity of all lifting lines and connections.
4. Position and place the component onto the ship's deck in the desired position.

CAUTION

Each component frame base is equipped with mounting eyes through which hex head screws are inserted in order to secure the component to the ship's deck plates. All mounting eyes must be used to ensure that each component is properly secured to the ship's deck. Failure to use all mounting eyes could result in damage to the components and/or ship's deck due to torque generated by FTHE System operations.

CAUTION

Excessive bolt length could damage insert sealing cap allowing moisture to enter the frame tubing.

NOTE

It is recommended that hex head screws used for securing component frames to deck plates have a minimum shaft length sufficient to allow for washer thickness, deck plate thickness, and a minimum of 1-inch thread engagement.

NOTE

It is recommended that the lifting apparatus remain attached while components are secured to the ship's deck. The following procedures list the steps required to secure system components to the ship's deck by bolting them to previously installed customer supplied deck plates.

5. Secure the component frame to the ship's deck according to the following steps:
   - Place a lock washer and flat washer onto the shaft of a hex head screw.
   - Insert a hex head screw with washers into each mounting eye and tighten according to torque requirements listed in Table 9-4.
6. Lower the lifting sling and/or spreader bar assembly until the rope legs become slack.
7. Disconnect the lift lines from each lifting eye.
8. Move the lifting sling and/or spreader bar assembly away from the component. Store the lifting sling and/or spreader bar assembly according to operational requirements.

9.7.4 Major Unit Deck Mechanical Installation Procedures

This section describes the deck installation procedures, from forward to aft, and specific crane lifting operations that apply to the FTHE units. Refer to paragraph 9.7.4.6 for the recommended parts and specifications for deck installation.

9.7.4.1 Umbilical Winch/Levelwind Installation

The Umbilical Winch System consists of the Umbilical Winch Assembly and the Levelwind Assembly. The Levelwind Assembly and the Umbilical Winch Assembly are installed first due to their close proximity to the Control Van that was previously installed. The units are lifted into place by crane together as one assembly. When this is completed, the base frames are bolted the vessel deck using steel angles.

9.7.4.2 Heave Compensator Installation

Placement and alignment of the Heave Compensator is critical. Previously placed Umbilical Winch/Levelwind will align the centerline of the umbilical to route approximately 5-1/2 inches to the starboard side of the ship's crane base. Placement must be checked to verify that the centerline of the umbilical's route is also parallel to the ship's centerline. When this is completed, the base frame is bolted the vessel deck using steel angles.

9.7.4.3 HPU Installation

The next unit to be installed on the deck is the HPU Assembly. Care must be taken in lifting operations due to tight space constraint between starboard gunwale and the HC. When the HPU load-out has been completed, the base frame is bolted the vessel deck using steel angles.

9.7.4.4 A-Frame Installation

The A-Frame is normally stored fully assembled by Building 1394, ready for mobilization. However, if there is a need for disassembly and re-assembly to perform maintenance and/or painting, then follow the procedures outlined in paragraph 9.7.4.4.1.

In order to keep the legs restrained during mobilization, special A-Frame foot spreader bars shall be attached prior to moving and load-out on the vessel.

A-Frame load-out may be accomplished with either one crane (75 ton nominal) with a spreader bar or two cranes (50 tons each) working together. For reference, the lift is 73,000 pounds. The A-Frame is lowered onto the deck and the base plates are adjusted hydraulically, if required, using the foot spreader hydraulics. The anchor bolts are lubricated with Marine-Kopr (Table 5-3, Item 10) and inserted through the A-Frame Assembly base plates and into the deck mounting plates. The anchor bolts are torqued to 200 ft-lbs in accordance with Table 9-4.

9.7.4.4.1 A-Frame Pre-Assembly

The following procedure assumes the A-Frame has been broken down into major components and is ready for re-assembly. Table 9-3 provides rigging equipment requirements for assembly. The Docking Head should be laid on its side and supported by dunnage. The port and starboard A-Frame legs are positioned next to it and then bolted together. Once the bolts are properly torqued, the hydraulic lines and hoses are connected between the starboard A-Frame leg and the Docking Head Assembly.

Table 9-3 A-Frame Assembly Rigging Equipment Requirements

ASSEMBLY	SHACKLE SIZE	SHACKLE QTY REQ	WEIGHT (APPROX)	DUNNAGE	INSTRUCTIONS
Base Weldment	N/A	N/A	4 Tons Each	N/A	Strap to choke around base weldment
Leg Assembly	1" (1.5" max. pin diameter)	3	7 Tons Each	Two places: 46" + height of each leg	Chain falls with slings required to level out legs for mounting
Docking Head General Assembly	7/8" (1" max. pin diameter)	2	12 Tons	**Docking Head Cross Member Weldment:** 46" height (2' x 13') **Docking Head Assembly:** 31" height (2' long, min.)	Strap to rotate Docking Head Assembly 90° from ground (2 individual hooks required)

Table 9-3 A-Frame Assembly Rigging Equipment Requirements - *continued*

TACKLE REQUIREMENTS			
ASSEMBLY	**ITEM**	**QTY**	**DESCRIPTION**
Base Weldment	Strap	1	4 Ton capacity in choke mode 12' length, minimum
Leg Assembly	Chain Falls	1	2 Ton capacity 10' lifting capability
	Sling	2	2 Ton capacity 20' length, minimum
Docking Head General Assy.	Strap	2	12 Ton capacity in choke mode 12' length, minimum

9.7.4.5 Operator Control Stations

9.7.4.5.1 Local Control

The Local Control is on a pedestal and located in the Control Booth (designated Control 2). It is positioned to provide FTHE Operator with an uninterrupted view of the entire aft working deck. The base frame is to be welded to deck after positioning per the Deck Layout.

9.7.4.5.2 Control Van

The remote computer control station should have been installed in the Control Van's electronics cabinet prior to load-out per Table 9-1. If not, then it should be installed during mobilization.

9.7.4.6 Recommended Parts and Specifications Required for Deck Installation

The required fasteners and associated torque values to install the FTHE units to the ship's deck are provided in Table 9-4. Fasteners used to secure equipment to deck shall be replaced annually.

Table 9-4 Fasteners & Specifications for Deck Installation

REQUIREMENT	LW TO UW	UW & LW TO BASE ANGLE	HPU TO BASE ANGLE	HC TO BASE ANGLE	N/A
Number of Hex Head Bolts	16	19	4	4	
No. of Hex Nuts	16	0	4	4	
No. of Lock Washers	32	19	4	4	
No. of Flat Washers	32	19	8	8	
Bolt Description (Zinc Coated Cap Screw)	1-8 UNC x 3-½" long	1-8 UNC x 2-¼" long	1-8 UNC x 2-¼" long	1-8 UNC x 2-¼" long	
Fastener Material Grade	5 or Better	5 or Better	5 or Better	5 or Better	
Torque Level (Lubricated)	200 ft-lbs	200 ft-lbs	200 ft-lbs	200 ft-lbs	

Table 9-4 Fasteners & Specifications for Deck Installation - *continued*

REQUIREMENT	N/A	UW & LW ANGLE TO DECK	HPU ANGLE TO DECK	HC ANGLE TO DECK	A-FRAME FOOT TO DECK
Number of Hex Head Bolts		19	8	16	48 Total (24 Per Side)
No. of Lock Washers		19	8	16	48
No. of Flat Washers		19	8	16	48 (square)
Bolt Description (Zinc Coated Cap Screw)		1-8 UNC x 2-½" long	1-8 UNC x 2-½ " long	1-8 UNC x 2-½ " long	1-8 UNC x 5 " long
Fastener Material Grade		Grade 8	Grade 8	Grade 8	Grade 8
Torque Level (Lubricated)		200 ft-lbs	200 ft-lbs	200 ft-lbs	200 ft-lbs

9.7.5 FTHE System Assemblies Utility Service Connections

After major FTHE System Assemblies are properly installed onboard ship, various utility services (electrical, hydraulic oil, pneumatic, and cooling water) must be connected. Performing the umbilical cable routing procedures and HC system pressure settings are also required.

WARNING

DANGER TO PERSONNEL! Prior to startup of Umbilical Winch System, ensure all personnel remain clear of the Umbilical Winch & Levelwind Assembly and the umbilical cable path.

WARNING

DANGER TO PERSONNEL! Prior to placing the Control Van (remote control station) in the enabled mode, ensure the Winch PAY-OUT/HAUL-IN joysticks at both the Local Control and Control Van panel are in the **NEUTRAL** position.

CAUTION

POSSIBLE EQUIPMENT DAMAGE! Prior to operation of the Umbilical Winch System, all installation procedures, hydraulic connections, and electrical connections must be completed for the entire system.

CAUTION

POSSIBLE EQUIPMENT DAMAGE! After FTHE initial startup, verify that minimum acceptable hydraulic system pressure levels are reached.

NOTE

The Umbilical Winch and operational functions may be stopped at any time by depressing the HPU STOP push button located on the Local Control Panel or the Control Van Panel (remote control) or the HPU Assembly High Voltage Enclosure.

9.7.5.1 Electrical Interconnection Hook-Ups

9.7.5.1.1 Electrical Considerations

Under normal operating conditions, the FTHE system poses no electrical hazards to personnel or equipment. However, the FTHE system does use voltages that are potentially lethal or hazardous should an accident or improper actions occur.

9.7.5.1.2 Electrical Connections

Electrical power cables for the FTHE System need to be routed appropriately (see

Figure 9-2) and connected to their respective enclosures after FTHE installation. The FTHE electrical enclosures have been assigned short acronyms for labeling and are listed for reference in Table 9-5.

Table 9-5 FTHE Electrical Enclosure Labels and Locations

LABEL	DESCRIPTION	LOCATION
ENC101	HPU Power Isolation	HPU forward, starboard side
ENC102	HPU High Voltage Enclosure	HPU aft, starboard side
ENC103	HPU Low Voltage Enclosure	
ENC104	Local Control Panel (Pedestal)	Deck Operator Van
ENC105	Levelwind Enclosure	HPU aft, port side
JB106	Winch J-Box	LW port, forward side
ENC107	Levelwind Control Panel	UW port, forward end
ENC5	Control Van Panel (Remote)	Control Van electronics cabinet
ENC7	HC Gas Intensifier Enclosure	HC starboard, aft side
ENC8	HC High Voltage Enclosure	HC aft, starboard side
ENC9	HC Low Voltage Enclosure	HC starboard, aft side
ENC10	Signal Conditioning Interface Enclosure	Control Van electronics cabinet
ENC11	A-Frame Accelerometer Enclosure	A-Frame Docking Head (top)
ENC12	Heave Compensator Accelerometer Enclosure	HC Flying Head
ENC13	A-Frame Load Pin J-Box	DCV Station, forward
ENC14	PDS Main Circuit Breaker Enclosure	PDS forward end
ENC15	PDS Transfer Switch Enclosure 2	PDS middle enclosure
ENC16	PDS Transfer Switch Enclosure 1	PDS aft end
ENC17	Test Shape Electronics Interface Enclosure	Control Van electronics cabinet
ENC18	NFESC Control Van Enclosure (break-out box)	Control Van aft, port side
ENC19	NFESC Control Van J-Box (slip ring cables)	Control Van aft, port side

Each cable connection is labeled according to the electrical enclosure origin and the electrical enclosure destination as listed in Table 9-6.

Table 9-6 FTHE Electrical Cable Connections

ORIGIN			DESTINATION			CABLE LENGTH (FT)
ENCLOSURE	CONN.	LABEL (CABLE #)	ENCLOSURE	CONN.	LABEL (CABLE #)	
ENC14 (PDS)	LI, L2, L3	**HPU PWR**	ENC101	P101/J101	**HPU PWR**	**140**
ENC103	J5/P5	(68)	ENC104	Hard Wired	(68)	75
ENC103	J51/P51	(1)	**ENC18** (ENC5)	P54/J54	(1)	90
ENC103	J41/P41	(3)	A-Frame JB-3	P2/J2	(3)	60
ENC103	J42/P42	(4)	ENC9	P39/J39	(4)	50
ENC103	J107/P107	(5)	ENC105	P108/J108	(5)	60
ENC103	J52/P52	(2)	**ENC18** (ENC10)	P55/J55	(2)	90
ENC105	Hardwired	ENC105	JB-106	P109/J109	P109/J109	—
ENC14 (PDS)	LI, L2, L3	**HC PWR**	ENC8	P60/J60	**HC PWR**	**140**
ENC9	J58/P58	(6)	**ENC18** (ENC10)	P53/J53	(6)	100
ENC9	J57/P57	(7)	**ENC18** (ENC5)	P56/J56	(7)	100
ENC13		(8)	**ENC18** (ENC5)		(8)	62
SR-1	J4		**ENC19** (ENC17)			
SR-1	J6		**ENC19** (ENC17)			
Genset		**PDS PWR**	**ENC15** (PDS TSW-2)		**PDS PWR**	

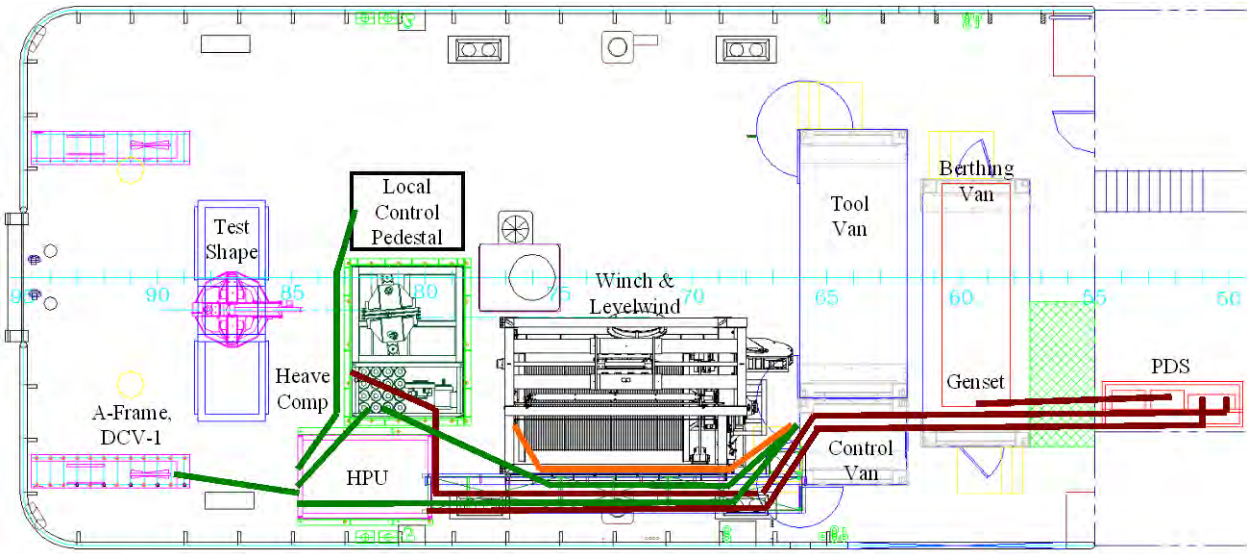

Figure 9-2 FTHE Electrical Cable Paths & Connection Locations

9.7.5.1.3 Electrical Power Continuity Checks

The FTHE requires 480 VAC, 60 Hz, 3-phase power and is provided from portable service generator(s) via Power Distribution System (PDS) transfer switches and circuit breakers. The HPU requires 300 Amp power and the Heave Compensator requires 250 Amp power.

The electrical cables and connectors should all be checked for damage after handling for mobilization. All connector pins should be checked for signs of corrosion after storage and cleaned as needed.

Perform the following procedures for conducting FTHE electrical system continuity checks for validating proper installation.

a. Ensure generator supplying power to FTHE PDS is OFF and secured. Tag-out Generator Main Power Switch to prevent inadvertent start-up during electrical continuity checks.
b. Open the PDS Transfer Switch (TS2) panel door and visually check that the Normal (A) & Emergency (B) switches are in OFF position. If not, then use the manual switch handle (yellow Hubbell tool stored on inside of panel) to turn switches OFF.
c. Check continuity of connection from Generator to PDS Transfer Switch (TS2). Using a Digital Multimeter with about 12' leads, check for tone on each of the three phases at bus bars of Generator and "Normal" side (top) of transfer switch. Check each bus to ensure there is conductivity to only one (e.g.: no shorts).
d. Check continuity of power cables from PDS Main Power Transfer Switch Panel to both the HPU and Heave Compensator. Using a Digital Multimeter, check for tone on all of the cable conductors by touching leads to corresponding connector pin on each end of cable. Also check the other two connector pins to ensure there is conductivity to only one (e.g.: no shorts).
e. Connect the power cables from PDS Main Power Transfer Switch Panel to both the HPU's Power Isolation Enclosure (ENC101) and the Heave Compensator's High Voltage Enclosure (ENC8).
f. Check to ensure the power switches are in OFF position at the Power Isolation Enclosure (ENC101) & Heave Compensator High Voltage Enclosure (ENC8).
g. Open the PDS Main Power Transfer Switch Panel and ensure that the circuit breakers for the HPU (300 Amp), HC (250 Amp) and Spare (30 Amp) are all in the OFF position.
h. Close the PDS Transfer Switch (TS2) enclosure door and secure. Ensure that the exterior Transfer Switch toggle is in the NORMAL POWER position.
i. Perform portable Generator start-up procedure (may differ depending on rental unit), follow the instructions from the manufacturer's operation manual.
j. Once the Generator has been started and warmed-up, check the panel meters to ensure correct voltage of 480VAC & frequency of 60Hz, adjust as needed.
k. Check that the PDS Transfer Switch (TS2) panel's NORMAL POWER green indicator lamp is on. Also check the Shark 100 panel meter to ensure correct readings for voltage of 480VAC and frequency of 60Hz.
l. Open the PDS Main Power Transfer Switch Panel and turn the HPU (300 Amp) circuit breaker ON. Then close and secure the enclosure door.
m. At the HPU Power Isolation Enclosure (ENC101) turn power switch to ON.

n. Have assistant push HPU #1 START button on the HPU High Voltage Enclosure (ENC103) while you stand at forward end of HPU to watch for rotation of HPU #1 motor with hand on the Power Isolation Enclosure (ENC101) power switch. If the motor's fan turns counterclockwise, then immediately turn power switch OFF. Correct by re-terminating the generator cable conductors in the PDS Transfer Switch (TS2) by switching two leads. If HPU motor turns clockwise, then the power cables were terminated properly.

9.7.5.1.4 Electronics Cabinet Subassemblies

The Control Van electronic subassemblies should be installed into the cabinet and electrically connected to the UPS, and in turn, the UPS to receptacle power. The UPS should not be connected to the Control Van receptacle until after the Control Van has received its 208 VAC power. The electrical power and signal cable connections must be completed prior to the start-up and operation of the FTHE System and are provided in Table 9-7.

Table 9-7 Electronics Cabinet Subassembly Cable Connections

CONNECTION FROM		CARRYING	CONNECTION TO
Control Van Panel [ENC5]	Terminal Board TB1 and TB4	Signal	Signal Interface Enclosure [ENC10 (P10)], via Control Van Enclosure [ENC18]: UW Slip Rings, HC Low Voltage Enclosure [ENC9], & A-Frame Load Pin J-Box [ECL13]
Control Panel	120 VAC	Power	UPS Receptacle
Monitor	120 VAC	Power	UPS Receptacle
Computer	Processor Card	Signal	Monitor
Computer	NI7041/6040E	Signal	Signal Interface Enclosure [ENC10 (STB1)]
Computer	NI6527	Signal	Signal Interface Enclosure [ENC10 (STB2)]
Computer	NI6527	Signal	Signal Interface Enclosure [ENC10 (STB3)]
Computer	NI6034E	Signal	Test Shape Electronics Interface Enclosure [ENC17 (Multifunction DAQ Breakout)]
Computer	Processor Card	Signal	Keyboard
Computer	Processor Card	Signal	Trackball
Computer	120 VAC	Power	UPS Receptacle
Signal Interface Enclosure [ENC10]	J10, J1 & J2	Signal	Control Van Panel [ENC5] & via Control Van Enclosure [ENC18]: HC Low Voltage Enclosure [ENC9], and A-Frame Load Pin J-Box [ECL13]
Signal Interface Enclosure	120 VAC	Power	UPS Receptacle
Test Shape Signal Interface	U1, U2 & U3	Signal	Umbilical Winch (UW) Slip Ring via Control Van J-Box [ENC19]
Test Shape Signal Interface	120 VAC	Power	UPS Receptacle
UPS	120 VAC	Power	Control Van Power Receptacle

9.7.5.2 Pneumatic Interconnection Hook-Ups

9.7.5.2.1 Pneumatic Considerations

Working in and around high-pressure machinery and the associated hoses and connections requires specific safety warnings to be addressed. The HC System stores nitrogen as a low-pressure gas, but through the use of an intensifier (compressor) raises it to a high operational pressure. As part of this system, the Servo Accumulator (ACC-3) must be precharged to a specific pressure (Table 9-9) depending on the various vehicle/package weights required for FTHE operations. Eventually, nitrogen pressure will decrease to a point where it must be replaced. Nitrogen gas is added to the system using external supply bottles.

Various personnel and equipment safety considerations when operating with high pressure gas are provided in **WARNING** and **CAUTION** statements that follow:

WARNING

DANGER TO PERSONNEL! Always shut down and decompress complete system prior to performing any compressor maintenance.

WARNING

DANGER TO PERSONNEL! Always disconnect the system from the main supply prior to performing any maintenance on the compressor system with electric motor drive.

WARNING

DANGER TO PERSONNEL! Never repair pressure lines by soldering or welding.

WARNING

DANGER TO PERSONNEL! Never open any hydraulic outlet valves (allowing hydraulic oil to vent to the atmosphere) when the system is under pressure but not completely connected. The highly pressurized emerging gas can cause serious accidents.

CAUTION

POSSIBLE EQUIPMENT DAMAGE! Low nitrogen pressure can have an adverse effect on FTHE system operations. At the commencement of each mobilization, check for nitrogen leaks at all fittings and couplings using soapy water or spraying with leak test spray. Repair any leaks found by tightening joints or replacing faulty components.

CAUTION

All connecting hoses must be in satisfactory condition with threads undamaged. Carefully inspect the interface of hose-to-hose fittings for rubber scoring and replace if damaged. When the rubber is scored, water can enter and attack the wire gauze causing rust, thereby compromising personnel and system safety.

CAUTION

Do not allow the nitrogen gas bottles to drop below 500 psig to prevent the entrance of moisture and ambient air into the bottles.

9.7.5.2.2 HC Assembly Gas Reclamation System

The HC Assembly Gas Reclamation System uses nine 2,250 psig low-pressure nitrogen storage bottles (GB-8 to GB-16) to provide a sufficient quantity of nitrogen to allow the HC Assembly to operate properly. In turn, the intensifier (compressor) uses five 3,500 psig high-pressure nitrogen receiver bottles (GB-3 to GB-7) for accepting the high-pressure nitrogen it creates. The 14 nitrogen gas bottles used for operations are located in the HC Gas Bottle Rack on the upper level of HC Assembly and their locations are identified in Figure 9-3 (plan view, with starboard side of ship at top and aft on right).

Two gas bottles (GB-1 & GB-2) are labeled in the rack, however, these two bottles are actually located in lower level next Servo Accumulator (ACC-3) for which they are connected. These two slots in Gas Bottle Rack are now filled with spare storage gas bottles (GB-17 & GB-18).

Note: The intensifier (compressor) requires a minimum of 500 psig at HDR-20 to operate.

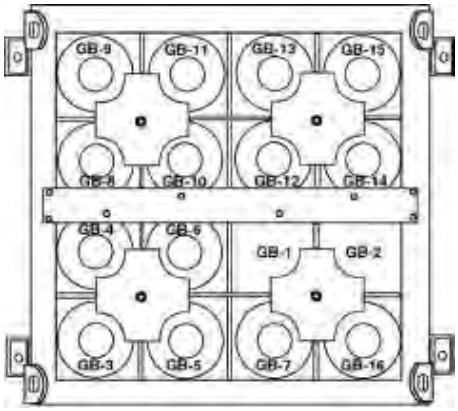

Figure 9-3 HC Gas Bottle Rack

9.7.5.2.3 Pneumatic Connections

The nine storage bottles are connected to low-pressure header (HDR-20) and the five receiver bottles are connected to high-pressure header (HDR-21) in the HC Gas Bottle Rack. Once the HC Gas Bottle Rack is secured within its position in the HC Assembly, four nitrogen lines must be connected to the HC Assembly. All HC Gas Reclamation nitrogen hose connections are listed in Table 9-8.

Table 9-8 HC Gas Reclamation Nitrogen Hose Connections

LOW PRESSURE		HIGH PRESSURE	
HDR-20	CONNECTION	HDR-21	CONNECTION
Hose 119	GB-8	Hose 128	GB-3
Hose 120	GB-9	Hose 129	GB-4
Hose 121	GB-10	Hose 130	GB-5
Hose 122	GB-11	Hose 131	GB-6
Hose 123	GB-12	Hose 132	GB-7
Hose 124	GB-13	BV-22	Hose 110
Hose 125	GB-14	BV-25	Hose 112
Hose 126	GB-15	BV-26	Hose 113
Hose 127	GB-16	BV-27	Hose X
BV-29	Hose 6 from PG-12	BV-28	Hose X
BV-TF	Hose 7 from BV-18	N/A	N/A
BV-23	Hose 8 from CV-14 & CV-15	N/A	N/A

9.7.5.2.4 Adding Nitrogen to Gas Reclamation System from an External Source

Eventually the nitrogen will decrease in pressure through leaks or natural attrition and must be replaced. To add nitrogen to the HC Assembly Gas Reclamation System from an external source, perform the following procedures:

a. Perform start-up procedures for the Heave Compensator system.

b. At the Local Control Panel (Pedestal - ENC104), flip the HEAVE COMP toggle switch to the "UNLOCK" position.

c. At the HC High Voltage Enclosure (ENC8), turn the power switch to ON.

d. Ensure HC Flying Head Assembly is bottomed-out by pressing COMPENSATOR toggle switch to LOWER on the HC High Voltage Enclosure (ENC8) until main cylinders CYL-15 & CYL-16 are fully retracted.

e. Secure the HC from operating by flipping the HEAVE COMP toggle switch on Local Control Panel (Pedestal - ENC104) to LOCK position, close switch cover and tag-out the Pedestal Control Panel with “DO NOT OPERATE”. Visually confirm that both ball valves BV-9 & BV-11 are closed. Close ball valve BV-32.

f. At the HC High Voltage Enclosure (ENC8), press the COMPENSATOR toggle switch to LOWER and decrease the receiver bottles pressure to 500-600 psig.

g. Close all but one of the nitrogen storage bottles in the Bottle Rack.

h. Ensure low-pressure nitrogen ball valve BV-TF, mounted on the Bottle Rack low-pressure Header (HDR-20), is closed along with ball valves BV-17 and BV-18.

i. Disconnect the hose from BV-TF where it connects above BV-18.

j. Connect the external nitrogen bottle through a hydraulic jumper hose to BV-TF hose using a number 4 male, 37 degree Joint Industry Council (JIC) fitting.

k. Open BV-TF and slowly open the external nitrogen bottle valve.

l. At the HC High Voltage Enclosure (ENC8), press the COMPENSATOR toggle switch to RAISE and increase the receiver bottles pressure until the external storage bottle pressure has dropped to between 500 and 600 psig.

m. Once the system has come to equilibrium (500-600 psig), close the external nitrogen bottle valve and close ball valve BV-TF.

n. If more of a nitrogen charge is needed, connect a new fully-charged external nitrogen bottle and repeat the steps **j** through **m**.

o. When completed charging system with external nitrogen bottles, reconnect the line from ball valve BV-TF to ball valve BV-18.

p. Open all gas storage bottles, ball valve BV-32, and resume normal operations.

9.7.5.2.5 HC Boost Pressure Precharge Procedure

The HC Servo Accumulator (ACC-3) precharge pressure is referred to as "Boost Pressure" and is read from Boost Accumulator Gas Pressure gauge on aft gauge panel above HC High Voltage Enclosure. The HC Servo Accumulator (ACC-3) and nitrogen gas bottles (GB-1 & GB-2) need to be precharged to an initial pressure that is 10% below the HC hydraulic system pressure which is based upon the anticipated A-Frame load range, see Table 9-9.

Table 9-9 Boost Accumulator Gas Pressure Charge for A-Frame Load Range

A-FRAME LOAD RANGE	HC HYD. OIL PRESSURE	BOOST ACCUMULATOR GAS PRESSURE
5,000 to 24,000 lbs	2,200 psig	1,980 psig
24,000 to 34,000 lbs	2,500 psig	2,250 psig

CAUTION

If the umbilical is reeved on the HC sheaves and the Flying Head was not left in lowest position, the following procedure will cause the umbilical to slack. Ensure personnel in area are aware of this prior to lowering HC Flying Head.

NOTE

The HC Boost Accumulator Gas Pressure cannot be changed to accommodate different A-Frame Assembly weight loads *until* the hydraulic oil in accumulators ACC-1 and ACC-2 has been completely drained and the nitrogen pressure reduced to 0 psig.

To adjust proper HC Boost Accumulator Gas Pressure for A-Frame load range, precharge the HC Servo Accumulator (ACC-3) and gas bottles (GB-1 & GB-2) with nitrogen by performing the following steps:

a. Perform start-up procedures for the Heave Compensator system.

b. At the Local Control Panel (Pedestal - ENC104), flip the HEAVE COMP toggle switch to the "UNLOCK" position.

c. At the HC High Voltage Enclosure (ENC8), turn the power switch to ON.

d. Ensure HC HPU motor is secured by verifying the HPU RUNNING lamp is out and then tag-out the HC's HPU START button with "DO NOT OPERATE".

e. Ensure the hydraulic oil OPEN LOOP SYSTEM PRESSURE gauge reads 0 psig.

f. Ensure HC Flying Head Assembly is bottomed-out by pressing COMPENSATOR toggle switch to LOWER on the HC High Voltage Enclosure (ENC8) until main cylinders CYL-15 & CYL-16 are fully retracted.

g. Secure the HC from operating by flipping the HEAVE COMP toggle switch on Local Control Panel (Pedestal - ENC104) to LOCK position, close switch cover and tag-out the Pedestal Control Panel with "DO NOT OPERATE". Visually confirm that both ball valves BV-9 & BV-11 are closed. Close ball valve BV-32.

h. Verify that the ball valves BV-38 (on GB-1) and BV-39 (on GB-2) are open, located aft inside cage by Servo Accumulator 3 (ACC-3).

i. At the upper level bottle rack, close all but one of the receiver bottle valves.

j. Slowly open BV-14, located on forward top of the Hydraulic Panel, which will release pressure from the one high-pressure nitrogen receiver bottle (previous step) to gas bottles GB-1 and GB-2 via header HDR-16.

k. At the HC High Voltage Enclosure (ENC8), hold the COMPENSATOR toggle switch to RAISE position until the Boost Accumulator Gas Pressure gauge shows the desired pressure, determined by the A-Frame load range shown in Table 9-7. Release the toggle switch, which turns off the intensifier (HC compressor).

l. Close BV-14, located on top forward end of the Hydraulic Panel.

m. Close ball valves BV-38 (on gas bottle GB-1) and BV-39 (on gas bottle GB-2) if the HC system is not going into immediate use.

n. Return the receiver bottles to their normal operating pressure using the intensifier and holding the COMPENSATOR toggle switch to LOWER position.

o. At the upper level bottle rack, open all the receiver bottle valves.

p. Open ball valve BV-32, located on the HC Hydraulic Panel forward end.

q. Refill the HC Main Cylinders (CYL-13 & CYL-14) with hydraulic oil and then balance the cylinders and their accumulators (ACC-1 & ACC-2) to 50% of travel.

9.7.5.3 Hydraulic Interconnection Hook-Ups

9.7.5.3.1 Hydraulic Considerations

Working in and around high-pressure machinery, the associated hoses and connections requires specific safety warnings to be addressed. The FTHE System utilizes high operational hydraulic pressures where special caution needs to be exercised. Various personnel and equipment safety considerations when operating with high pressure hydraulic systems are provided in WARNING and CAUTION statements that follow:

WARNING

Always shut down HPU power, isolate specific line(s) by shutting valves, and depressurize hydraulic system prior to performing any maintenance.

WARNING

Never repair pressure lines by soldering or welding.

WARNING

Never open any hydraulic outlet valves (allowing hydraulic oil to vent to the atmosphere) when the system is under pressure but not completely connected. Highly pressurized, emerging oil can cause serious accidents.

CAUTION

Low HPU Charge Pressure (less than 350 psi) can have an adverse effect on the HPU pumps. At the commencement of each power-up, check the Charge Pressure gauge to ensure it reads ~370 psi, otherwise press STOP button and perform trouble shooting to correct.

CAUTION

All hydraulic connecting lines must be in satisfactory condition, with no visible damage or leaks. Carefully inspect the interface of hose connections and interconnecting fittings for damage or leaks. Repair any leaks found by tightening joints or replacing faulty components.

9.7.5.3.2 Hydraulic Connections

The hydraulic hose connections for all FTHE major units must be completed prior to start-up and operation of the Umbilical Winch System and A-Frame Assembly (Figure 9-4). The hoses are kept off the deck by utilizing cable/hose trays from Control Van to HPU and HPU to A-Frame.

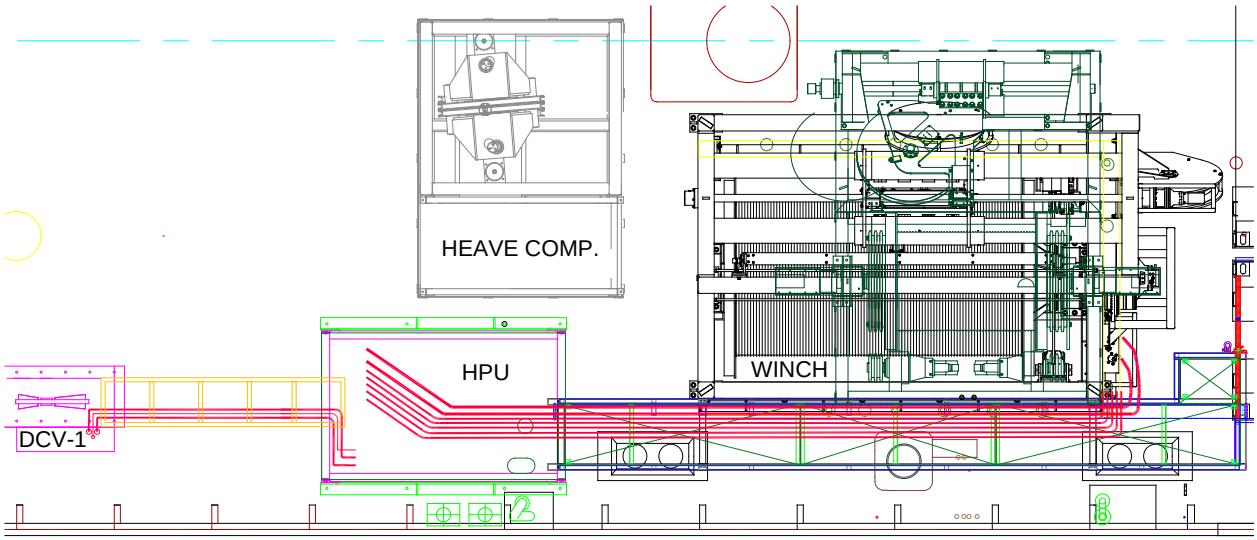

Figure 9-4 FTHE Hydraulic Hose Paths & Connection Locations

9.7.5.3.3 Umbilical Winch / Levelwind Hydraulic Interconnection

The Umbilical Winch / Levelwind System hose interconnections are shown in Figure 9-4 and listed in Table 9-10.

Table 9-10 Umbilical Winch / Levelwind Hydraulic Interconnection

HOSE ORIGIN	HOSE LABEL	HOSE DESTINATION
HPU Manifold (STORAGE WINCH CASE)	UW Case	QD-103C/QD-103N
HPU Manifold (STORAGE WINCH A)	UW Port A	QD-101P/QD-101S
HPU Manifold (STORAGE WINCH B)	UW Port B	QD-102P/QD-102S
HPU Manifold (LEVELWIND PRESS.)	LW Press.	QD-110C/QD-110N
SW-1 QD (LW Hyd Panel, port, aft side)	LW Return	QD-109N/QD-109C
HPU Manifold (LEVELWIND ZERO PRESS)	LW Zero Press.	QD-108N/QD-108C
Winch Motor Case Drain	UW Drain	QD-104N/QD-104C

9.7.5.3.4 A-Frame Hydraulic Interconnection

The A-Frame hydraulic hose interconnections, from HPU to the A-Frame Assembly Manual DCV Station, are shown in Figure 9-4 and listed in Table 9-11. This mobilization effort assumes the A-Frame assembly is moved as one unit, with all interconnecting hydraulic lines between legs and Docking Head intact.

Table 9-11 A-Frame Hydraulic Hose Interconnection

HOSE ORIGIN	HOSE LABEL	HOSE DESTINATION
HPU MANF-101 (LARS PRESS. label)	LARS Press.	FL-11 QD (Manual DCV Station)
DCV-1 QD (Manual DCV Station)	LARS Return	HPU Manifold HDR-102 (LARS RETURN label)
HPU Reservoir RES-101 (LARS ZERO PRESSURE label)	LARS Zero Press.	HDR-7 QD (Manual DCV Station)

NOTE

Launch and Recovery System (LARS) is a term used interchangeably by the manufacturer to refer to the FTHE system as a whole (refer to Appendix 9, DD No. 707-0000-01, Launch and Recovery System General Arrangement) and at other times, the A-Frame Assembly (and Manual DCV Station) itself. The term LARS as used in Table 9-11 (with hydraulic hoses labeled as such) refers to the A-Frame Assembly (and Manual Station DCV-1).

9.7.5.3.5 Hydraulic System Oil Replacement

9.7.5.3.5.1 Umbilical Winch and Levelwind Oil Replacement Procedure

If the Umbilical Winch and Levelwind have had all oil reservoirs and cases drained, then the following steps to replace hydraulic oil must be accomplished prior to startup.

Table 9-12 UW & LW Upper Case Drain Fitting Locations

EQUIPMENT	DESIGNATION	FLOW LINE ID	NUMBER OF DRAINS
Umbilical Winch Pumps	HP-101A	15	1
	HP-102A	26	1
Levelwind / Auxiliary Pumps	HP-101B	9	1
	HP-012B	11	1
Umbilical Winch Hydraulic Motor Case Drain	HM-101C	25	1

Reference: Hydraulic Schematic 1088-8331-01 for flow line ID locations.

NOTE

All hydraulic fluid should be passed through a 10-micron filter prior to commencing each FTHE System mobilization.

a. Remove the upper case drain fittings as listed in Table 9-12.

b. Remove dirt, grease, or other contaminants from the surface areas surrounding the upper case drain openings and from the upper case drain fittings.

c. Fill pump and motor cases through the **upper** case drain openings with hydraulic fluid. It is recommended that all hydraulic fluid be passed through a 10 micron filter.

d. Reinstall and tighten case drain lines and tighten all fittings where required.

e. Loosen suction lines at the respective pump inlet.

f. Using a 10-micron filter cart, fill the power unit reservoir until fluid reaches the loosened hoses at the respective pump inlet(s). Tighten the hoses and continue filling the reservoir, ensuring that the reservoir fluid level has reached the "HIGH" mark on the applicable sight level gauge.

g. Recheck pump and motor case fluid levels.

9.7.5.3.5.2 HC Hydraulic Oil Replenishment Procedure

Replenishment of the hydraulic oil in closed loop system of the HC Flying Head cylinders (CYL-13 & CYL-14) and accumulators (ACC-1 & ACC-2) is required during mobilization. Periodic flush and fill of this oil is recommended after every 2 weeks of continuous operations in order to prevent degradation of oil that may reduce operational effectiveness.

For this operation the receiver bottles will need pressure reduced to only 100-200 psi, which if at operational charge will result in appreciable nitrogen being vented. Therefore, it may be necessary to replace the nitrogen lost from the flush, such that replacement storage bottles should be available to complete procedure.

CAUTION

The HC Flying Head will be moved during these procedures. Ensure all personnel are clear of HC *prior* to moving Flying Head. Also check that Flying Head path is clear and no loose tools or foreign materials are on HC.

NOTE

The HC Boost Accumulator Gas Pressure cannot be changed to accommodate different A-Frame Assembly weight loads *until* the hydraulic oil in accumulators ACC-1 and ACC-2 has been completely drained and the nitrogen pressure reduced to 0 psig.

The following procedures assume the umbilical is *NOT* installed on HC and can be performed without utilizing the Control Van computer.

1. Ensure BV-9 and BV-11 are closed. This is required to ensure the flying head does not inadvertently move.
2. Open the valves on the Receiver Bottles.
3. Open the valves on the Storage Bottles.
4. Ensure BV25-28 are open.
5. Ensure BV-12, 13, 15, and 16 are open.
6. Ensure BV-22 and BV-23 are open.
7. Turn on the power switch to the Heave Compensator
8. Set the pressure in the receiver bottles to 100-200 psi.

a. To increase pressure, open BV-24 to transfer gas from storage bottles.
b. To lower pressure, hold the intensifier operation switch to the LOWER position until 500 psi is achieved in receiver bottles, and then loosen a hose fitting to one receiver bottle venting nitrogen until 100-200 psi is achieved.

9. Remove the pin securing the actuators to BV-9 and 11 so the valves can be actuated manually.
10. Open BV-10, located on the HC Hydraulic Panel top aft end.
11. Move BV-31 to the drain position.
12. Open BV-30 to allow the oil from the cylinders to vent to the reservoir. This will lower the flying head if it is not landed.
13. Manually, open BV-9 slowly. The oil inside accumulator ACC-1 will vent to the reservoir. There is a possibility that it may raise the docking head, but it will lower again.
14. Manually, slowly open BV-11. The oil inside accumulator ACC-2 will vent to the reservoir. There is a possibility that it may raise the docking head, but it will lower again.
15. Start the Heave Compensator HPU.
16. Close ball valve BV-32, then switch BV-31 from drain to fill. This will fill the accumulators and then the flying head will rise.
17. Before the head reaches full stroke (approximately 42 inches), move BV-31 back to drain. This will drain the cylinders, lowering the flying head and then drain the accumulators.
18. Allow 2 minutes after the flying head lands for the accumulators to empty.
19. Manually close BV-9 and 11.
20. Move BV-31 to fill. Just before flying head reaches full stroke, move BV-31 back to drain.
21. Repeat step 20 several times to dilute the dirty oil with clean oil
22. Fill the cylinders near full again and close BV-30.
23. Manually open BV-9. The flying head will lower, pumping the cylinder oil into ACC-1. If the flying head does not lower, the pressure in the accumulator is too high and must be reduced. See step 8b.
24. When the flying head has landed, close BV-9.
25. Open BV-30 to raise the flying head filling cylinders again. Close BV-30 when near full.
26. Manually open BV-11. The flying head will lower, pumping the cylinder oil into ACC-2.
27. When the flying head has landed, close BV-11.
28. Move BV-31 handle horizontal to its neutral position.
29. The oil level in the cylinder/accumulator circuit has now been flushed and filled. If the computer is available, ACC-1 and 2 accumulator pistons should both be at approximately 20% if done correctly. If not, repeat from step 11.

30. Increase the pressure in the receiver bottles to 500 psi by opening BV-24 until the pressure is achieved.
31. Close BV-10, located on the HC Hydraulic Panel top aft end.
32. Reinstall the pins securing the actuating cylinders to BV-9 and BV-11.
33. Verify using the checklists that all valves are in the correct position for operation or shutdown, depending the next evolution.

9.7.5.4 Cooling Water Hose Connections

Cooling water should run continuously when the FTHE system is operating and secured when the FTHE is secured. The cooling water hose connections for both the HPU and the HC must be completed prior to start-up and operation of the applicable FTHE system. To prevent damage to the HPU and HC heat exchangers, they should be drained during cold weather idle periods when temperatures are anticipated to approach or drop below freezing. The cooling water hose connections are listed in Table 9-13.

Table 9-13 Cooling Water Hose Connections

UNIT	SUPPLY	IN	CONNECTION	OUT	DESTINATION
HPU	Ship	PSH-4	HX-1	Discharge	Overboard
HC	Ship	SOV-6	HX-2	Discharge	Overboard

9.7.6 Umbilical Routing Procedures

9.7.6.1 Umbilical Reeve Considerations

9.7.6.1.1 Bend Radius and Outer Jacket Protection

The core of the umbilical cable has fiber optic cables running through it and they can be damaged if the bend radius of the umbilical cable is less than 20-inches. The exterior of the umbilical cable consists of a hytrel jacket that while inherently strong, will chafe if the cable is drawn over sharp edges or rough surfaces.

9.7.6.1.2 Number of Personnel

The task of routing the umbilical cable, lower strength termination, and lower E/O junction box (hereafter referred to as strength termination and J-box, respectively) is a difficult one and requires a work force of at least eight to ten personnel to accomplish. Specific tasks involve: the Deck Supervisor responsible for overall task, the FTHE Operator at the Local Control to pay out cable as required, an Operator at the Levelwind Hydraulic Panel to control the levelwind drive assembly, and approximately six personnel to route the umbilical cable.

9.7.6.1.3 Umbilical Cable Routing

In brief summary, the umbilical cable is taken from the Umbilical Winch drum, passes through the Levelwind, through the HC sheaves, over the Docking Head Sheave, and finally terminates to the lower termination on Test Shape or Vehicle.

WARNING

Death or injury can result when working around operating machinery or from falls from high elevations while routing the umbilical cable. To prevent death or injury, keep back from immediate contact with operating machinery and pay attention to safe footing when working at high elevations.

CAUTION

DO NOT allow the umbilical cable to be subjected to a bend radius of less than 20 inches or pass over sharp bends or rough surfaces. Otherwise damage to the umbilical cable can occur.

CAUTION

The umbilical termination and J-Box can be damaged if handled incorrectly. Be extra careful when passing off the J-Box while reeving umbilical around the sheaves.

9.7.6.2 Umbilical Route on Levelwind

To begin routing the umbilical cable on the Levelwind, perform the following steps:

a. Remove the tie-down strap holding the strength termination and J-box to the winch drum.
b. Operate the umbilical winch drum to pay out approximately 30 feet of cable.
c. Drive the Levelwind either left or right until the LW Sheave is immediately above the last cable wrap.
d. Remove the LW bolt-on cheek plate (DD 1088-2003-03, Items 3) from the side of the LW sheave. (See Figure 9-6).

Figure 9-5 LW Prep for Umbilical Routing

e. Insert the umbilical cable into and around the sheave and reinstall the cheek plate, making sure the cable is between the LW sensor guide pins. Torque the 5/8-11UNC bolts to 110 ft-lbs lubricated (Marine-Kopr, Table 5-3, Item 10).

9.7.6.3 Umbilical Reeving on Heave Compensator

The following procedures should be performed to properly reeve the umbilical onto the Heave Compensator's sheaves.

To route the umbilical through the HC Assembly, perform the following steps:

a. Open the forward and aft HC Assembly lower level access doors.

b. Remove flying head top compression weldment (DD 0707-7001-03, Item 10). Use deck crane to lift from padeye at top of weldment. (See Figure 9-6).

Figure 9-6 HC Flying Head Top Compression Weldment

c. Remove lower sheave cable guides (DD 0707-7001-01, Item 20). (See Figure 9-7).

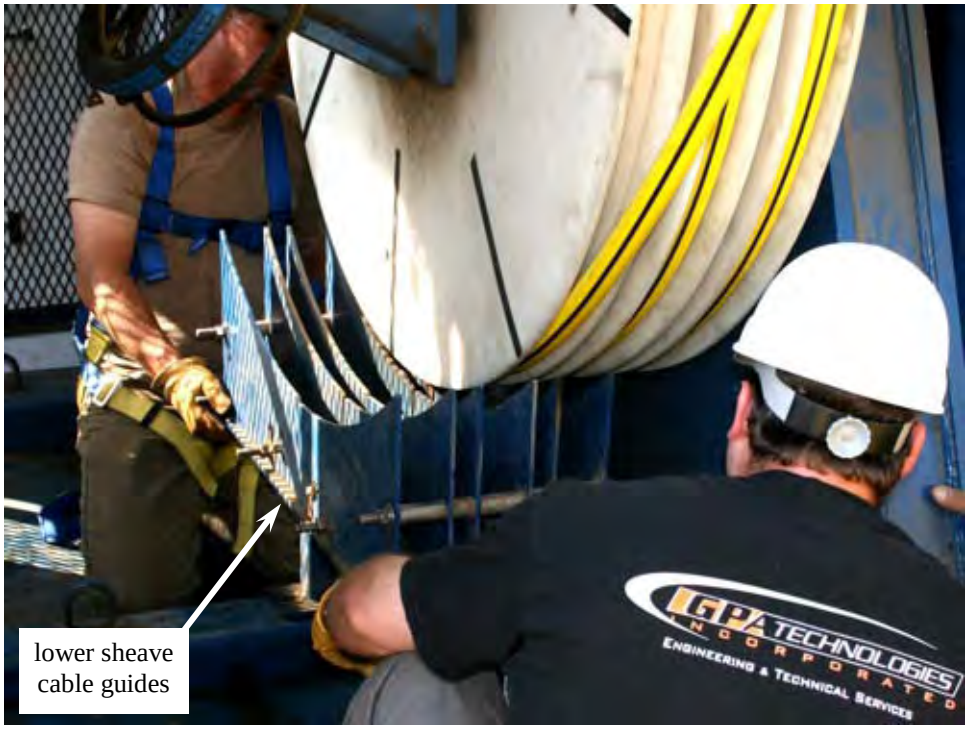

Figure 9-7 HC Lower Sheave Cable Guide Removal

d. Pay out umbilical cable as required keeping in mind the bend radius requirement.

e. Position at least two personnel in the upper level of the HC Assembly ready to receive the J-box and cable.

f. Securely attach a rope to the J-box and pass the rope under the bottom, starboard sheave and on up to the upper level personnel.

g. Pull the J-box/cable up and over the top, starboard sheave and back down to the bottom of the HC Assembly.

h. Guide the umbilical cable into the bottom-middle sheave and again pass the rope/J-box to the upper level personnel.

i. Pull the J-box/cable up and over the top, port sheave and back down to the bottom of the HC Assembly.

j. Guide the umbilical cable into the bottom-port sheave and exit the HC Assembly through the aft access door.

k. Reinstall the flying head top compression weldment with mounting hardware.

l. Reinstall the lower sheave cable guides with mounting hardware.

m. Close and secure the forward and aft HC Assembly lower level access doors.

9.7.6.4 Umbilical Route on the Docking Head Sheave

a. Various methods may be used to route the umbilical on the docking head sheave; however, it is recommended that it be done in conjunction with installing the sheave.

b. Other items to be removed, in order to allow adequate space for the umbilical strength termination and J-box to route through, include the fairing weldment and inner side plates (DD 0707-6003-01, Items 6 and 44 consecutively).

c. The A-frame should be in vertical position, with the cursor located below on the aft deck.

d. While personnel stationed aft of HC pull on umbilical to prevent slack, operator of umbilical winch pays out until approximately 30-ft of cable is available on aft deck to enable rigging for lift to docking head.

e. Attach sling to umbilical in two places with 5-ft distance between, in order to ensure the minimum bend radius is not compromised during lift. (See

Figure 9-8). Note how J-box is rigged with rope to the umbilical strength termination for protecting the interconnecting cable and terminations from damage during procedures.

f. Deck crane operator lifts the umbilical to docking head, while umbilical winch operator pays out, with several personnel pulling on umbilical aft of HC in order to maintain tension and prevent slack in route back to winch.

g. Personnel on the docking head platform direct the J-box and umbilical strength termination between the overboard sheave cheek plates and through docking head ring.

h. Once the J-box and umbilical strength termination are carefully lowered to the deck, the umbilical is secured above the overboarding sheave assembly, ensuring the umbilical is safe from sharp edges and potential pinch points during the sheave installation.

Figure 9-8 Umbilical Route on Docking Head, J-Box Insertion

i. The docking head overboarding sheave is rigged with a strap in the groove, then lifted with deck crane and installed. (See Figure 9-9).

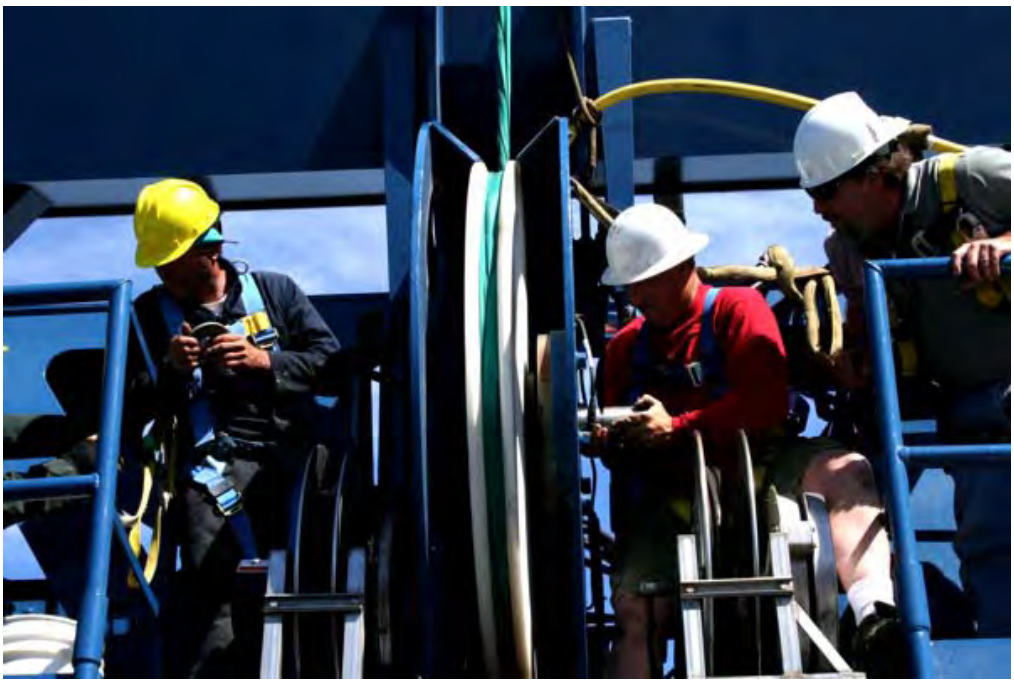

Figure 9-9 Installing Docking Head Overboarding Sheave

j. The umbilical is carefully placed into the sheave groove after the overboarding sheave has been installed, along with replacing fairing weldment and sheave inner side plates.

9.7.6.5 Umbilical Route through the Cursor

a. Disassemble Cursor's cable guide and cable guide cap (Appendix 9, DD 0707-5001-01, Cursor Assembly, Items 2 and 3).

b. With A-frame still in vertical position from docking head sheave routing; raise cursor off the aft deck about 5-ft high to enable routing J-box and umbilical strength termination.

c. Umbilical winch operator hauls in slowly to lift the J-box and umbilical strength termination off back deck, with personnel guiding them to prevent damage, and then lowers them through the Cursor center hole.

d. Position at least two personnel appropriately to receive the J-box and umbilical strength termination, pulling enough umbilical through for making connection to the Test Shape or Vehicle termination.

e. Reinstall the Cursor's cable guide and guide cap on Cursor Assembly. (See Figure 9-10). Note in Figure the rigging of Cursor's heavy items to the Docking Head frame above.

Figure 9-10 Cursor Assembly During Umbilical Routing

9.7.7 Hydraulic System Start-Up Preparation

The *"FTHE System Power-Up Procedure"* in Appendix A should be followed when the FTHE system is powered-up for operation. A brief list of start-up checks are as follows:

- Verify that all connections are correct and tight
- Startup the HPU

- Check the power lamp
- Check the pressure gauges
- Check for leaks
- Shutdown, as required, and correct any problems

9.7.7.1 FTHE Initial Pressure Settings

CAUTION

Pressure settings are factory preset and unless a malfunction clearly indicates degraded equipment performance at start-up, these values *should not* need to be adjusted.

9.7.7.2 Umbilical Winch/HPU Hydraulic System Initial Pressure Settings

Refer to Appendix 10, DD No. 0707-8001-01, Winch/Levelwind/HPU Hydraulic Schematic and Table 9-14 for the Umbilical Winch/HPU Hydraulic System initial pressure settings.

Table 9-14 Umbilical Winch/HPU Hydraulic System Initial Pressure Settings

DESCRIPTION	PRESSURE (PSI)
Winch Pump HP-1A and HP-2A, “A” Port	4,200
Winch Pump HP-1A and HP-2A, “B” Port	2,500
Charge Pump HP-1A and HP-2A	350
Open Loop Circuit, Levelwind Circuit, and Auxiliary Circuit	3,000
O & K Gearbox Brake Release Pressure	218
Compensator Pump HP-3 Charge Pressure	300
Compensator Pump HP-3	3,000
Tank Nitrogen Pressure Relief Setting	5

9.7.7.3 HC Initial Pressure Settings

9.7.7.3.1 HC System Nominal Relief Pressure Settings

The HC System nominal relief pressure settings are listed in Table 9-15.

Table 9-15 HC System Nominal Relief Pressure Settings

DESCRIPTION	PRESSURE (PSI)
Standby Pressure Setting	300
Maximum Pressure Setting	3,000
Tank Overpressure Setting	5

9.7.7.3.2 LCI-90 Tension Reading vs. HC System Gas Pressure

The LCI-90 Tension Reading vs. HC System Accumulator Gas Pressure is shown graphed in Figure 9-11 and selected individual tension values are listed in Table 9-16. The tension reading is taken from either the Pedestal or Control Van Panel LCI-90 display and represents that for a given load at the A-Frame Assembly (vehicle/package and umbilical cable weight), the HC System gas pressure required to offset the total weight.

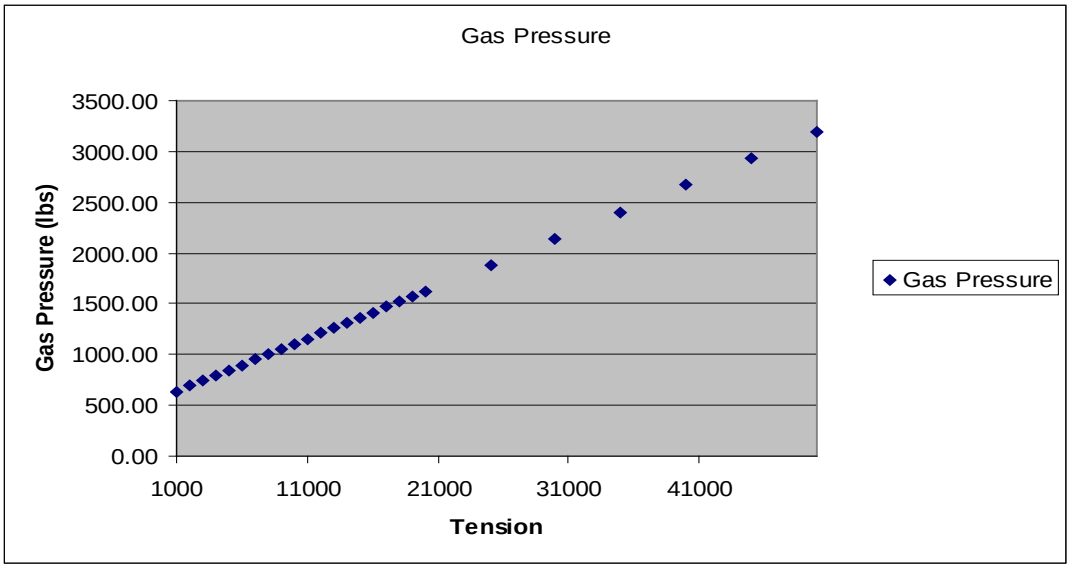

Figure 9-11 LCI-90 Tension Reading vs. HC System Accumulator Gas Pressure

Table 9-16 LCI-90 Tension Reading vs. HC System Accumulator Gas Pressure

TENSION READING (LBS)	ACCUMULATOR GAS PRESSURE (PSIG)*
7,000	950
8,000	1,000
9,000	1,050
10,000	1,100
11,000	1,150
12,000	1,200
13,000	1,250
14,000	1,300
15,000	1,350
16,000	1,425
17,000	1,475
18,000	1,525
19,000	1,575
20,000	1,625
25,000	1,875
30,000	2,150
35,000	2,400
40,000	2,675
45,000	2,925
50,000	3,200

* Pressure rounded to nearest 25 psig

9.8 LOAD TEST

A static lift and dynamic load (luffing) test is required prior to commencing FTHE operations.

WARNING

LIFTING AND MOVING HAZARDS! The load test involves operating equipment to raise, lower, and move heavy equipment on the after deck. Death, injury, or equipment damage is possible if not done safely. All personnel must be aware of action to be taken in order to maintain a safe operation. The FTHE Operator should be the only person on the aft deck. All other personnel/observers should watch from the pier.

9.8.1 Static Lift Test

The Static Lift Test is performed while the ship is dockside, configuring the Test Shape for maximum load of 42,500 lbs (1.25 x SWL). The Test Shape is to be placed on the aft deck centered under the A-Frame while in vertical position. The sequence of testing is as follows:

a. Tension the umbilical to approximately 2000 - 3000 pounds.

b. Lower the Cursor slowly until it latches with the Test Shape.

c. Place the umbilical winch in the constant tension mode.

d. Using the cursor winch assembly, raise the load approximately one foot off the aft deck and hold for 5 minutes as shown in Figure 9-12.

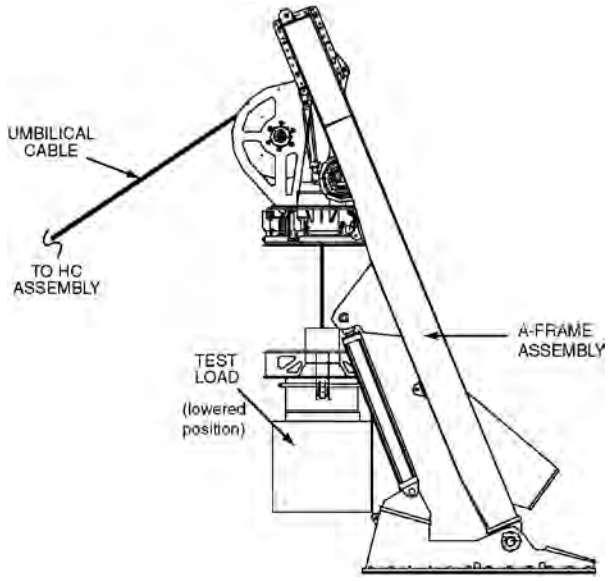

Figure 9-12 A-Frame with Test Load Partially Raised Off the Deck

e. Using the cursor winch assembly, raise the Test Shape until it latches with the Docking Head as shown in Figure 9-13.

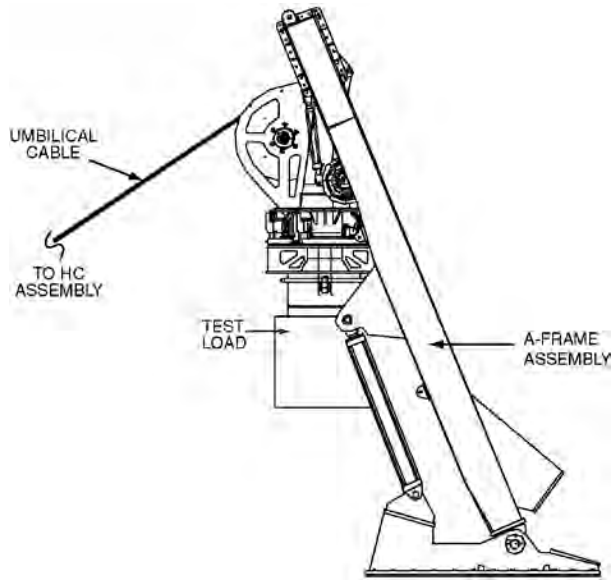

Figure 9-13 A-Frame with Test Load Raised and Latched into the Docking Head

9.8.2 Dynamic Load Test

The Dynamic Load Test is performed while the ship is dockside, usually immediately following the Static Load Test, with Test Shape configured for maximum load of 42,500 lbs (1.25 x SWL). Sequence of testing is as follows:

a. With Test Shape latched to the Docking Head, luff the A-Frame fully outboard as shown in Figure 9-14, and hold in this position for 5 minutes.

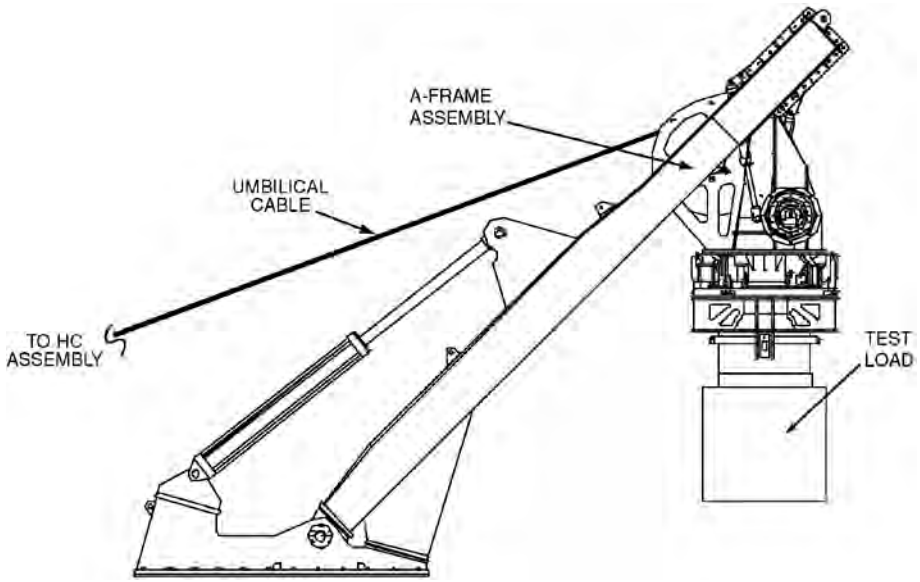

Figure 9-14 A-Frame with Test Load Luffed Outboard

b. Unlatch the Cursor from the Docking Head and lower the test load until it is approximately midway between the Docking Head and the surface of the water.

c. Disable constant tension.

d. Pay out on the cursor winch only enough until the cables are visibly slack.

e. Secure HPU-1 and HPU-2 for 10 minutes simulating a loss of power to the HPU. This also tests the Umbilical Winch brake holding capabilities.

f. Resume power to HPU-1 and HPU-2.

CAUTION

Do not haul-in the cursor cables too far creating slack in the umbilical cable. This may cause a loose wrap on the umbilical winch drum.

g. Remove only the slack in the cursor winch cables.

h. Haul in on the cursor winch until the tension on the umbilical cable is approximately 2000 - 3000 pounds.

i. Place the umbilical winch in the constant tension mode.

j. Haul in on the cursor winch to raise the load until it latches in the Docking Head.

k. Luff the A-Frame Assembly fully inboard.

l. Unlatch the Cursor Assembly from the Docking Head and lower Test Shape to the deck.

9.8.3 Pre-Calibration Procedures

Pre-calibration procedures include precharging the Servo Accumulator (ACC-3) and the gas bottles (GB-1 and GB-2) and HC hydraulic oil replenishment. To perform the pre-calibration procedures, perform the following steps:

a. Perform the HC Boost Pressure Precharge Procedure (section 9.7.5.2.5).

b. Perform the HC Hydraulic Oil Replenishment Procedure (section 9.7.5.3.5.2).

9.9 FTHE FUNCTIONAL TESTS

The FTHE System is initially calibrated during the Calibration Cruise. Unless specific maintenance is done to alter those conditions, the FTHE system should operate within approved parameters. The objective of the functional tests is to verify the integrated FTHE operations in “Auto Passive” mode and “Active” mode, which includes Docking Head Tension, ROV Tension, ROV Altitude, and Bottom Keeping.

9.9.1 Docking Head Tension

The purpose of testing Docking Head Tension control is to verify the operation of Docking Head Tension control. The expected outcome is decreased tension variability due to wave action with the average HC Flying Head position maintained at mid-stroke. Perform the following steps for Docking Head Tension test:

a. Operate FTHE in the Auto Passive mode so that the vehicle is at a depth of approximately 100 feet.

b. At the Control Van Panel, select the Heave Compensator position for display.

c. At the Control Van Panel, begin data logging.

d. At the Control Van Panel, select Docking Head Tension mode.

e. Initiate the Active "Docking Head Tension" mode.

f. Allow the FTHE system to operate for approximately 3 minutes.

g. At the Control Van Panel, transition to Auto Passive mode.

h. At the Control Van Panel, stop data logging.

i. Review recorded tension data to ensure tension control in the Docking Head Tension mode is less variable (± 1,500 lbs of actual line tension) than in Auto Passive mode.

j. Repeat steps a through i at the Shallow Site Depth minus 100 ft.

k. Repeat steps a through i at the Long Scope Depth minus 100 ft.

9.9.2 ROV Tension

The purpose of testing ROV Tension control is to verify the operation of ROV Tension control. The expected outcome is decreased tension variability due to wave action with the HC Flying Head position maintained at 25% to 75% of total travel. To perform ROV Tension calibration testing, perform the following steps:

a. Operate in Auto Passive mode so that the vehicle is in a short scope deployment.

b. At the Control Van Panel, select the Heave Compensator Position for display.

c. At the Control Van Panel, begin data logging.

d. At the Control Van Panel, pre-select ROV Tension mode.

e. Initiate the Active "ROV Tension" mode.

f. Allow the FTHE system to operate for approximately 3 minutes.

g. At the Control Van Panel, transition to Auto Passive mode.

h. At the Control Van Panel, stop data logging.

i. Review recorded tension data to ensure tension control in ROV Tension mode is less variable (± 1,500 lbs. of actual line tension) than in the Auto Passive mode.

j. Repeat steps a through j at the Shallow Site Depth minus 100 ft.

k. Repeat steps a through j at the Long Scope Depth minus 100 ft.

9.9.3 ROV Altitude

The purpose of testing ROV Altitude control is to verify the operation of ROV Altitude control. The expected outcome is to control the vehicle altitude above the sea floor in response to surface wave action or change in operator directed commands. To perform ROV Altitude calibration testing, perform the following steps:

a. Operate in Auto Passive mode so that the vehicle is 40 ft from the sea floor.

b. At the Control Van Panel, select the Vehicle Altitude for display.

c. At the Control Van Panel, begin data logging.

d. At the Control Van Panel, select Active “ROV Altitude” mode.

e. Wait approximately 1 minute and ensure that vehicle altitude is being maintained at 40 feet, ± 4 inches (average).

f. Change the commanded altitude to 30 ft.

g. Wait approximately 1 minute and ensure that the vehicle altitude is being maintained at 30 feet, ± 4 inches (average).

h. Change the commanded altitude to 40 ft.

i. Wait approximately 1 minute and ensure that the vehicle altitude is being maintained at 40 feet, ± 4 inches (average).

j. At the Control Van Panel, stop data logging.

k. At the Control Van Panel, begin data logging for ordered altitude testing.

l. At the Control Van Panel, select Active “ROV Altitude” mode.

m. Wait approximately 1 minute and ensure that vehicle altitude is being maintained at 40 feet.

n. Request an ordered altitude change at the consol to decrease the altitude approximately 10 feet.

o. Wait approximately 1 minute and ensure that the vehicle altitude is being maintained at 30 feet.

p. Request an ordered altitude change from the student at the consol to increase the altitude approximately 10 feet.

q. Wait approximately 1 minute and ensure that the vehicle altitude is being maintained at 40 feet.

r. At the Control Van Panel, stop data logging.

s. At the Control Van Panel, transition to the Auto Passive mode.

t. Review recorded altitude data to ensure that the vehicle altitude is being maintained.

u. Repeat steps a through t at the Shallow Site Depth minus 100 ft.

v. Repeat steps a through t at the Long Scope Depth minus 100 ft.

9.9.4 Bottom Keeping

The purpose of testing Bottom Keeping control is to verify the operation of Bottom Keeping control. The expected outcome is to control the heave compensator on the vehicle (maintain 0.0 ± 8.0 inches) to prevent vehicle movement off the sea floor in response to surface wave action. To perform ROV Altitude calibration testing, perform the following steps:

a. Ensure the vehicle is mated to a package.

b. Operate in Auto Passive mode so that vehicle/package is 40 ft from the sea floor.

c. At the Control Van Panel, select ROV Altitude for display.

d. At the Control Van Panel, begin data logging.

e. At the Control Van Panel, select Active “ROV Altitude” mode.

f. Wait about 1 minute and ensure that vehicle altitude is being maintained at 40 feet.

g. Decrease ROV Altitude command to slowly lower the vehicle to an altitude of one foot. (Ordered altitude control may be used.)

h. At the Control Van Panel, select Active “Bottom Keeping” mode.

i. Wait approximately 3 minutes and ensure that the vehicle heave compensator is being maintained at 0 ± 11 inches.

j. At the Control Van Panel, stop data logging.

k. Use the Control Van Panel joystick to raise the vehicle/package off the ocean floor to a safe operating altitude (40 ft).

l. At the Control Van Panel, transition to the Auto Passive mode.

m. Review recorded vehicle heave compensator position data to ensure that the vehicle heave compensator position is being maintained at 0.0 ± 8.0 inches.

n. Repeat steps a. through t at the Long Scope Depth.

[This page intentionally left blank]

10.0 DEMOBILIZATION

10.1 INTRODUCTION

This chapter describes the tools and support equipment, removal procedures, and packing/crating/loading procedures for removing the FTHE major units from the ship's deck. It also describes the electrical, hydraulic, and pneumatic considerations in this endeavor and provides a list of the various tasks that must be accomplished when the FTHE is stored for extended periods of time.

10.2 TOOLS AND TEST/SUPPORT EQUIPMENT

A list of tools and test/support equipment required to perform troubleshooting, corrective maintenance, mobilization, and demobilization procedures are provided in Table 7-1.

10.3 CONSUMABLE LIST

A list of the consumable items required to perform troubleshooting, corrective maintenance, mobilization, and demobilization procedures are provided in Table 8-4.

10.4 FTHE REMOVAL FROM DECK

10.4.1 Deck Layout

The FTHE deck layout is shown in Figure 9-1.

10.4.2 FTHE Removal from Ship

The general sequence for removing the FTHE major units from the ship's deck is listed in Table 10-1. Ensure the A-Frame is in vertical position prior to de-energizing FTHE system.

Table 10-1 FTHE Demobilization

STEP	TITLE	DESCRIPTION	REMARKS
1	Fresh Water Wash-Down	Wash all FTHE with fresh water to remove salt deposits.	This can be done prior to demobilization.
2	Un-reeve Umbilical Cable	Perform the following disassembly procedures to allow the lower strength termination and junction box to pass freely through the various FTHE Assemblies. Disassemble cursor bell mouth. Remove fairings around Docking Head Sheave Assembly overboarding sheave. Remove the HC Lower Head Assembly lower sheave cable guides. Remove the HC Flying Head Assembly block. Remove the Levelwind Assembly sheave cheek plate. Remove the Levelwind Assembly plate covering the triggering rollers. Securely attach the lower strength termination and J-box to the winch drum umbilical cable lays with rope.	The umbilical cable is hauled in on the winch drum as required. The Levelwind drive assembly must be constantly controlled to ensure orderly, tight wraps on the umbilical winch drum. **NOTE** If the Control Van electrical control cables have been removed, connect a jumper wire between TB1-230 and TB1-231 in the HPU Low Voltage Enclosure (ENC103). This removes the Control Van Emergency Stop Switch from the circuit and allows operation of the HPU Assembly and Umbilical Winch System. Cover the umbilical cable ends with plastic bags and securely seal with tape.

Table 10-1 FTHE Demobilization - *continued*

STEP	TITLE	DESCRIPTION	REMARKS
3	Prepare A-Frame for removal	Lift Cursor until locked in the Docking Head. Luff A-Frame to vertical position.	FTHE power cannot be removed until this operation is complete.
		WARNING ELECTRICAL SHOCK! Death or injury may result from contact with high voltage power. Ensure HPU and HC Assembly AC Power circuit breakers and the ship's generator AC Power circuit breaker are OPEN to prevent electrical shock and possible death. **WARNING** ELECTRICAL SHOCK! The UPS contains its own energy source (battery) and the UPS AC output terminals may be live even when the UPS is not connected to an AC power supply. Ensure the UPS is completely OFF. (See Remarks column for procedure.)	
4	Disconnect All Electrical Cables from the Control Van and PDS	Ensure all cables are labeled. Disconnect, remove, and lay cables straight on after deck. Cover cable ends with plastic bags and secure with tape. Neatly coil cables, place on wooden pallets, and secure in place.	To ensure UPS is completely OFF: with the UPS ON and receiving utility power, press and hold the ON/OFF/STANDBY button for one second (an alarm will beep once briefly after the time has passed); then unplug UPS. This includes Power, Control, and Slip Ring cables. Need tie-wraps, plastic bags, tape, & wooden pallets.
5	Depressurize HC System	Nitrogen, hydraulics, and water.	Ensure ship's cooling water is secured. (Do not forget to bleed HC hydraulic supply tank.)
6	Lock A-Frame Cylinder Valves	Preparation for uncoupling hydraulics.	BV-6 and BV-7
7	Disconnect All Hydraulic Lines	Disconnect and plug all hydraulic hoses and cap hydraulic fittings on the FTHE.	Need oil absorbent pads and a 5-gallon bucket to collect oil spills.

Table 10-1 FTHE Demobilization - *continued*

STEP	TITLE	DESCRIPTION	REMARKS
8	Remove Umbilical Winch Assembly	Remove mounting bolts from base plate and have crane remove Umbilical Winch Assembly to the pier.	May require pry bar to help remove from base plates.
9	Remove A-Frame	Ensure A-Frame is in vertical position. Remove base plate bolts and lift to pier. Have the crane attach lifting straps.	If storing upright and assembled
10	Prepare HC Assembly for Removal	Ensure HC accumulators have been bled to 0 psig, the cylinders are fully bottomed, and the flying head assembly is locked in place by closing BV-9 and BV-11. Open BV-10.	
11	Remove HC Assembly	Unbolt from deck. Replace bolts in frame. Place on pier. Lower into horizontal position and lift onto truck.	
12	Remove HPU	Unbolt from support frame and unstrap from deck. Have crane place on pier.	
13	Remove Control Booth	Cut welds from base frame to deck. Have crane place on pier.	Ensure all internal items, windows and doors are secured prior to lift.

10.5 FTHE STORAGE PREPARATION

A list of the maintenance tasks to be performed when the FTHE system is to be stored for extended periods of time is listed in Table 10-2.

Table 10-2 Storage Preparation Maintenance Tasks

EQUIPMENT	ACTIVITY	PROCEDURE
All FTHE	Wash Down FTHE System	10.5.1.1
All FTHE	Grease FTHE Components	10.5.1.2
All FTHE	Cover FTHE for Storage	10.5.1.3
All FTHE	Cap All Electrical Connectors	10.5.1.4
All FTHE	Cap All Hydraulic Connections	10.5.1.5
HC Assembly	Cap All Nitrogen Connections	10.5.1.6
Umbilical Winch Gear Box	Preserving the Gear Box	10.5.2.1.1
Umbilical Winch Gear Box	Reactivating the Gear Box	10.5.2.1.2
Umbilical Winch Drum Shaft	Inspect Umbilical Winch Drum Shaft for Corrosion	10.5.2.1.3
Levelwind Gear Box	Preserving the Gear Box	10.5.2.2.1
Levelwind Gear Box	Reactivating the Gear Box	10.5.2.2.2
Levelwind Guide Bar	Inspect Levelwind Guide Bars for Corrosion	10.5.2.2.3
HC Assembly Hydraulic Cylinder Rods and Hinge Pins	Inspect Hydraulic Cylinder Rods and Hinge Pins for Corrosion	10.5.2.3.1

Table 10-2 Storage Preparation Maintenance Tasks - *continued*

Compressor/Intensifier	General Considerations	10.5.2.3.2.1
Compressor/Intensifier	Preparations	10.5.2.3.2.2
Compressor	Preserving the Compressor	10.5.2.3.2.2.1
Compressor Electric Motor	Preserving the Electric Motor	10.5.2.3.2.2.2
Compressor	Preventative Maintenance During Storage	10.5.2.3.2.2.3
Compressor	Change Lube Oil	10.5.2.3.2.2.4
Compressor	Reactivating the Compressor/Intensifier	10.5.2.3.2.2.5
UPS	Battery Charging	10.5.2.4.1.1.1

10.5.1 General Maintenance Procedures

General maintenance procedures for long-term storage that apply to all of the FTHE system are described in the following paragraphs. Unless otherwise stated, all maintenance is done when the FTHE system is secured.

10.5.1.1 Wash Down FTHE System

To wash down the FTHE, perform the following steps:

a. Ensure all electrical enclosures and junction box covers are securely fastened.
b. Ensure all electrical connectors, hydraulic connections, and nitrogen connections and their respective hoses are properly capped.
c. Wipe up any standing hydraulic oil or grease with rags and dispose of contaminated rags in accordance with local procedures.
d. Wash the FTHE with clean fresh water to remove all salt deposits, dust, and dirt.
e. Allow the FTHE to air dry, or to hasten the process, use low pressure air to remove puddles and excess moisture.

10.5.1.2 Grease FTHE Components

Refer to “Grease Fittings” procedures in paragraph 5.1.2.3 and grease the FTHE components listed in Table 5-2.

10.5.1.3 Cover FTHE for Storage

The FTHE should be covered to protect it from dust and dirt. Plastic sheeting may be used to cover the unit if it is certain that no condensation will form under it.

10.5.1.4 Cap All Electrical Connectors

All electrical connectors at enclosure panels, junction boxes, and the cables themselves, must have their protective caps installed to prevent dirt and moisture from entering the connectors. Prior to installing caps, inspect (and repair as necessary) all pins/sockets. Insert desiccant (moisture-absorbing) bags inside all enclosures prior to tightly securing all enclosure doors.

10.5.1.5 Cap All Hydraulic Connections

All hydraulic hose connections and quick disconnect hose connections must be capped to prevent the inadvertent introduction of dirt into the system as well as the accidental discharge of

hydraulic oil. Prior to installing caps, inspect (and repair as necessary) all connector gaskets and O-Rings.

10.5.1.6 Cap All Nitrogen Connections

The nitrogen hose connectors for both the low pressure header and the high pressure header must be capped to prevent dust, dirt, and moisture from contaminating the nitrogen lines. The five high pressure receiver nitrogen bottles must be capped as well. Prior to installing caps, ensure hose is free of all debris. Inspect connector threads for damage and repair/replace as necessary.

10.5.2 Specific Maintenance Procedures

Specific maintenance procedures for long term storage that apply to various individual FTHE Assemblies are described in the following paragraphs. Unless otherwise stated, all maintenance is done when the FTHE system is secured.

10.5.2.1 Umbilical Winch Assembly

The specific maintenance procedures found in this paragraph apply only to the Umbilical Winch Assembly. For long term storage general maintenance procedures that also apply to the Umbilical Winch Assembly, see section 10.5.1.

10.5.2.1.1 Protect the Upper & Lower Sheaves

When the winch is to be stored for long duration in outdoor coastal environment, the Upper and Lower Sheaves should have their axles grease and a protective plastic taped over the sheave grooves to prevent wear or contamination that may damage umbilical on next operation.

10.5.2.1.2 Inspect Umbilical Winch Drum Shaft for Corrosion

To inspect the umbilical winch drum shaft for corrosion, perform the following steps:

a. Remove the protective cover, if used, from the umbilical winch drum and inspect drum shaft for corrosion.
b. If corrosion is discovered, use a Scotch-Brite™ pad and rag to remove all traces of corrosion.
c. Apply a barrier of hydraulic oil by rubbing the affected area with a rag soaked in hydraulic oil.
d. Install protective cover, if used, over the umbilical winch drum and fasten in place.

10.5.2.2 Levelwind Assembly

The specific maintenance procedures found in this paragraph apply only to the Levelwind Assembly. For long term storage general maintenance procedures that also apply to the Levelwind Assembly (refer to section 10.5.1).

10.5.2.2.1 Preserving the Gear Box

The long term storage preserving requirements for the Levelwind Assembly gear box (GB-102) are the same as those for the Umbilical Winch Assembly (paragraph **Error! Reference source not found.**).

10.5.2.2.2 Reactivating the Gear Box

The long term storage reactivating requirements for the Levelwind Assembly gear box are the same as those for the Umbilical Winch Assembly (paragraph **Error! Reference source not found.**).

10.5.2.2.3 Inspect Levelwind Assembly Guide Bars for Corrosion

To inspect the Levelwind Assembly guide bars for corrosion, perform the following steps:

a. Remove the protective cover, if used, from the guide bars and inspect guide bars for corrosion.
b. If corrosion is discovered, use a Scotch-Brite™ pad and rag to remove all traces of corrosion.
c. Recoat Levelwind Assembly guide bars with grease.
d. Install protective cover, if used, over the guide bars and fasten in place.

10.5.2.3 HC Assembly

10.5.2.3.1 Inspect Hydraulic Cylinder Rods and Hinge Pins for Corrosion

To inspect the hydraulic cylinder rods and hinge pins for corrosion, perform the following steps:

a. Remove the protective cover, if used, from the HC Assembly and inspect all hydraulic cylinder rods and hinge pins for corrosion.
b. If corrosion is discovered, use a Scotch-Brite™ pad and rag to remove all traces of corrosion.
c. Apply a barrier of hydraulic oil by rubbing the affected area with a rag soaked in hydraulic oil.
d. Install protective cover, if used, over the guide bars and fasten in place.

10.5.2.3.2 Compressor/Intensifier

10.5.2.3.2.1 General Considerations

When the compressor/intensifier is to be out of service for more than three months, it should be stored inside and preserved in accordance with the following instructions.

Make sure the compressor/intensifier is kept indoors in a dry, dust-free room. Plastic sheeting may be used to cover the unit if it is certain that no condensation will form under it. However, even then, the unit should be cleaned externally when the unit is operated quarterly as described in Preventative Maintenance During Storage.

10.5.2.3.2.2 Preparations

Before preserving the compressor/intensifier, run it to normal operating temperature and when it reaches the specified service pressure, continue running the unit for approximately 10 more minutes. Then perform the following:

a. Check all pipes, filters, and valves (also safety valves) for leakage. (Threads of pipe connectors should be lubricated with an anti-seize lubricant (Table 5-3, Item 7.)
b. Tighten all couplings, as required.

c. After 10 minutes, open the filling valves or the outlet valve and run the compressor at the set minimum pressure (pressure maintaining valve, 2,175 ± 145 psig or current value) for approximately 5 minutes, and then turn unit OFF.
d. Shut the system down and completely drain off all separators and filters. Close filling valves/outlet valve.
e. Remove filter heads and lubricate threads with lithium grease (Table 5-3, Item 9).

Preserving the Compressor

To preserve the compressor/intensifier, perform the following steps:

a. Turn the compressor/intensifier on again and slowly pour 2 cu-in. of synthetic lubricating oil (Table 5-3, Item 10) into the inlet port while the compressor is running. If the inlet port is in a horizontal position, use a hose pipe.
b. After pouring the oil into the inlet port, run the unit for approximately 5 minutes and then turn it OFF.
c. Place the dust cap onto the inlet port.
d. Close the shut-off valve.

Preserving the Electric Motor

When the electric motor is to be out of service for more than six months, it should be preserved in accordance with the following instructions to avoid motor damage.

a. The motor must be stored in a warm, clean, and dry environment.
b. To ensure that the integrity of the winding insulation has been maintained, use a Megger when the unit is operated quarterly as described in Preventative Maintenance During Storage (paragraph 10.5.2.3.2.2.3). Record the Megger readings and immediately investigate any significant drop in insulation resistance readings.
c. Do not lubricate bearings during storage. Excessive grease can damage insulation quality.
d. Loosen/remove the drive belt to minimize bearing load, which will prevent bearing damage due to continuous loading at one point during storage.

Preventative Maintenance During Storage

To observe preventative maintenance during storage, run the compressor by performing the following steps:

a. Remove the dust cap from the inlet port.
b. Open the filling valves or the outlet valve and let the unit run for approximately 5 minutes until air/gas flows out of the valve and oil is visible in the sight glass of the oil pressure regulating valve.
c. Stop the compressor.
d. Open the condensate drain valves, depressurize the unit, and then close drain valves again.
e. Replace the dust cap on the inlet port.

Change Lube Oil

After a prolonged storage, the oil will age in the compressor and must be drained and replaced by fresh oil. Perform the following steps:

a. After changing the oil, run the compressor as described in Preventative Maintenance During Storage (paragraph 10-5.2.3.2.2.3).

b. Check the lubrication of the compressor when putting the unit in operation once every three months or when turning the compressor.

Reactivating the Compressor/Intensifier

To reactivate the compressor/intensifier, perform the following steps:

a. Remove the dust cap from the inlet port.
b. Check that the oil level of the compressor is between the lower and upper level marks on the sight glass.
c. To avoid any possibility of condensation inside the motor, do not operate unit until the motor has come to room temperature for the room in which it will operate.
d. Run the compressor with open filling valves or outlet valve for approximately 5 minutes to ensure the unit has had a chance to warm up.
e. Check the oil flow through the oil pressure regulating valve sight glass. Ensure there are not air bubbles.
f. After 5 minutes, close the filling valves or the outlet valve and run the unit up to final pressure until the final pressure safety valve relieves.
g. Check the inter-pressure safety valves for leakage.
h. Establish the cause of any fault from the troubleshooting table in Chapter 6.
i. Stop the system when running properly. The compressor is now ready for normal operation.

10.5.2.4 Operator Control Station – Remote

10.5.2.4.1 Electronics Cabinet – UPS

10.5.2.4.1.1 Preventative Maintenance During Storage

Battery Charging

The batteries must be charged quarterly when the UPS is stored for long periods of time. To charge the UPS batteries, perform the following steps:

CAUTION

POSSIBLE EQUIPMENT DAMAGE! The UPS batteries will suffer a permanent loss of capacity if they are left in a discharged condition for an extended period of time. Never allow the UPS batteries to remain in a discharged condition for an extended period of time.

NOTE

After the UPS is plugged into the wall outlet and begins charging the batteries, it will not supply power to its AC outlets. Refer to the Tripp Lite Power Protection Owner's Manual, "Quick Installation" section located in the FTHE Component Literature Manual, Section: "Other" for more detailed operating instructions.

a. Plug the UPS into a wall outlet and allow it to charge batteries for a minimum of 12 hours.
b. Unplug the UPS from the wall outlet and return to storage.

10.6 SHIPPING CONFIGURATION

10.6.1 Nominal Weights

The FTHE system major units and related assemblies are shipped as independent units according to their nominal weights. Refer to Chapter 2 for the FTHE nominal weights.

[This page intentionally left blank]

APPENDIX A – FTHE OPERATIONAL CHECKS & PROCEDURES

A-1.0 OVERVIEW

This appendix provides a copy of the checks for deploying/recovering the vehicle, FTHE power-up/shut-down procedures, FTHE inspection sheet, applicable MSDS, the manufacturer's general arrangement and assembly drawings, hydraulic and electrical schematic drawings, control panel drawings, and other drawings and sketches.

A-2.0 FTHE GROUND BOND TESTING PROCEDURES

Each time the FTHE system is installed aboard the ship, a Ground Bond Test is to be performed to verify that a properly installed, low impedance, ground connection exists between all electrically powered equipment and the ship ground plane (hull).

CAUTION

ALL ELECTRICAL POWER MUST BE REMOVED FROM EQUIPMENT PRIOR TO PERFORMING THIS TEST.

FTHE Equipment To Be Tested

The following FTHE equipment is to have a Ground Bond Test performed after completion of installation, but before any electrical power is applied:

Heave Compensator	Hydraulic Power Unit
Winch and Level Wind	Power Distribution Unit
FTHE Generator	ROV Generator
ESSAC Power Van	NFESC Control Van

Ground Bond Test Equipment Setup

The Ground Bond test set will vary somewhat dependent upon manufacturer, features, and capacity, however the critical parameters are provided below along with specified settings:

TABLE 1 – SPECIFIED SETTINGS

TEST PARAMETER	VALUE	PURPOSE
Test Current	25-Amps	Sets Test Circuit Current
Maximum Limit (current)	100 mΩ	Sets Maximum (Fail) Resistance
Minimum Limit (current)	0 mΩ	Set Minimum (Open Circuit) Resistance
Dwell	60.0 seconds	Test Duration

GROUND BOND TESTING

The Ground Bond test determines whether the safety (equipment) ground circuit of the item under test is of sufficiently low resistance that it can adequately handle electrical fault currents if the item should ever become defective. A low impedance ground system is critical in ensuring that in case of electrical failure, a circuit breaker on the input power line will act quickly to protect personnel from any serious electrical shock.

GROUND BOND TEST PERFORMANCE

The Ground Bond Test is performed using a Ground Bond test set. The test set applies a test current, supplied by the test set, across the CURRENT and Return connections. By measuring the small voltage drop across the SENSE+ and SENSE- connections, the test set is able to provide a milliohm readout of the resistance of the test circuit.

TABLE 2 - TEST CONNECTIONS

TEST COMPONENT	CURRENT CONNECTION	RETURN CONNECTION	SENSE+ CONNECTION	SENSE- CONNECTION	EQUIP. GROUND CABLE CONN
Heave Compensator	High Voltage Panel (ENC-8) Mounting Stud	Disconnected Gnd Cable	High Voltage Panel (ENC-8) Mounting Stud	Disconnected Gnd Cable	Gnd Cable Disconnected from Gnd Bus
	High Voltage Panel (ENC-8) Mounting Stud	Ship Hull	High Voltage Panel (ENC-8) Mounting Stud	Ship Hull	Gnd Cable Connected to Gnd Bus
Hydraulic Power Unit	High Voltage Panel (ENC-1) Mounting Stud	Disconnected Gnd Cable	High Voltage Panel (ENC-1) Mounting Stud	Disconnected Gnd Cable	Gnd Cable Disconnected from Gnd Bus
	High Voltage Panel (ENC-1) Mounting Stud	Ship Hull	High Voltage Panel (ENC-1) Mounting Stud	Ship Hull	Gnd Cable Connected to Gnd Bus
Level Wind and Winch	High Voltage Panel (ENC-4) Mounting Stud	Disconnected Gnd Cable	High Voltage Panel (ENC-4) Mounting Stud	Disconnected Gnd Cable	Gnd Cable Disconnected from Gnd Bus
	High Voltage Panel (ENC-4) Mounting Stud	Ship Hull	High Voltage Panel (ENC-4) Mounting Stud	Ship Hull	Gnd Cable Connected to Gnd Bus
	Winch FWD Gnd Stud	Disconnected Gnd Cable	Winch FWD Gnd Stud	Disconnected Gnd Cable	Gnd Cable Disconnected from Gnd Bus
	Winch FWD Gnd Stud	Ship Hull	Winch FWD Gnd Stud	Ship Hull	Gnd Cable Connected to Gnd Bus

TABLE 2 - TEST CONNECTIONS - *continued*

TEST COMPONENT	CURRENT CONNECTION	RETURN CONNECTION	SENSE+ CONNECTION	SENSE- CONNECTION	EQUIP. GROUND CABLE CONN
Power Distribution Unit	Center High Voltage Panel (ENC-15) Mounting Stud	Disconnected Gnd Cable	Center High Voltage Panel (ENC-15) Mounting Stud	Disconnected Gnd Cable	Both Gnd Cables Disconnected from Enclosures
	Center High Voltage Panel (ENC-15) Mounting Stud	Ship Hull	Center High Voltage Panel (ENC-15) Mounting Stud	Ship Hull	Both Gnd Cable Connected
FTHE Generator	Generator Gnd Stud	Disconnected Gnd Cable	Generator Gnd Stud	Disconnected Gnd Cable	Gnd Cable Disconnected from Gnd Stud
	Generator Gnd Stud	Ship Hull	Generator Gnd Stud	Ship Hull	Gnd Cable Connected to Gnd Stud
ROV Generator	Generator Gnd Stud	Disconnected Gnd Cable	Generator Gnd Stud	Ship Hull	Gnd Cable Disconnected from Gnd Stud
	Generator Gnd Stud	Ship Hull	Generator Gnd Stud	Ship Hull	Gnd Cable Connected to Gnd Stud
ESSAC Power Van	Van Frame	Disconnected Gnd Cable	Van Frame	Ship Hull	Gnd Cable Disconnected from Gnd Stud
	Van Frame	Ship Hull	Van Frame	Ship Hull	Gnd Cable Connected to Gnd Stud

GROUND BOND TEST SETUP

To perform the Ground Bond test, follow the steps provided below:

1. Connect power to the test set.
2. Install the test leads as follows:
   a. Connect the red current lead (heavy wire) to the red CURRENT binding post
   b. Connect the black current lead (heavy wire) to the black RETURN binding post
   c. Connect the red sensing lead to the SENSE+ binding post
   d. Connect the black sensing lead to the SENSE- binding post
3. Verify that the SAFETY INTERLOCK module has been plugged into the SIGNAL INPUT port on the back of the test set.
4. Turn on the test set power switch. After 3-seconds the screen will indicate programmed test parameters. Desired test parameters are:

60.0 sec.	Test duration is set for 60.0 seconds
25.00 A	Current during test will be 25.0 Amps
100 mΩ	Maximum milliohm value is 100 mΩ

   If the parameter are not as listed above, consult the test set Operations and Service manual for changing the settings.
5. Connect the test leads to the equipment to be tested as specified in Table 1.
6. When ready to test, momentarily depress the TEST pushbutton. The tester will apply the test current (25.00 Amps) for the duration of the test (60.0 seconds) then automatically shut off.
7. To view the test results, press the bottom soft key. A screen will appear that shows results similar to this:

Test Results (PASS or FAIL)	
Settings	Results
25.00A	25.03A
100 mΩ	10 mΩ
0 mΩ	60.0 s
60.0 s	

8. Record test results on the Test Record sheet provided.
9. Press the EXIT soft button to return to the test screen and perform the next test.
10. When testing is complete, turn off the test set power switch. Remove and safeguard the SAFETY INTERLOCK module to prevent loss. Disconnect and package the power cord and test leads.

TABLE 3 - GROUND BOND TEST RECORD **Date:**

Test Component	Test Current Connection	Test Return Connection	Equip. Ground Cable Conn	Test Current	Milliohm Value	Test Duration	Pass or Fail	Initial
Heave Compensator	High Voltage Panel (ENC-8) Mounting Stud	Disconnected Gnd Cable	Gnd Cable Disconnected from Gnd Bus	25-Amps	26 mΩ	60-Seconds	PASS	
	High Voltage Panel (ENC-8) Mounting Stud	Ship Hull	Gnd Cable Connected to Gnd Bus	25-Amps	12 mΩ	60-Seconds	PASS	
Hydraulic Power Unit	High Voltage Panel (ENC-1) Mounting Stud	Disconnected Gnd Cable	Gnd Cable Disconnected from Gnd Bus	25-Amps	13 mΩ	60-Seconds	PASS	
	High Voltage Panel (ENC-1) Mounting Stud	Ship Hull	Gnd Cable Connected to Gnd Bus	25-Amps	8 mΩ	60-Seconds	PASS	
Level Wind and Winch	High Voltage Panel (ENC-4) Mounting Stud	Disconnected Gnd Cable	Gnd Cable Disconnected from Gnd Bus	25-Amps	14 mΩ	60-Seconds	PASS	
	High Voltage Panel (ENC-4) Mounting Stud	Ship Hull	Gnd Cable Connected to Gnd Bus	25-Amps	7 mΩ	60-Seconds	PASS	
	Winch FWD Gnd Stud	Disconnected Gnd Cable	Gnd Cable Disconnected from Gnd Bus	25-Amps	8 mΩ	60-Seconds	PASS	
	Winch FWD Gnd Stud	Ship Hull	Gnd Cable Connected to Gnd Bus	25-Amps	4 mΩ	60-Seconds	PASS	

TABLE 3 - GROUND BOND TEST RECORD - *continued* **Date:**

Test Component	Test Current Connection	Test Return Connection	Equip. Ground Cable Conn	Test Current	Milliohm Value	Test Duration	Pass or Fail	Initial
Power Distribution Unit	Center High Voltage Panel (ENC-15) Mounting Stud	Disconnected Gnd Cable	Both Gnd Cables Disconnected from Enclosures	25-Amps	12 mΩ	60-Seconds	PASS	
	Center High Voltage Panel (ENC-15) Mounting Stud	Ship Hull	Both Gnd Cables Connected	25-Amps	5 mΩ	60-Seconds	PASS	
FTHE Generator	Generator Gnd Stud	Disconnected Gnd Cable	Gnd Cable Disconnected from Gnd Stud	25-Amps	12 mΩ	60-Seconds	PASS	
	Generator Gnd Stud	Ship Hull	Gnd Cable Connected to Gnd Stud	25-Amps	8 mΩ	60-Seconds	PASS	
ROV Generator	Generator Gnd Stud	Disconnected Gnd Cable	Gnd Cable Disconnected from Gnd Stud	25-Amps	9 mΩ	60-Seconds	PASS	
	Generator Gnd Stud	Ship Hull	Gnd Cable Connected to Gnd Stud	25-Amps	3 mΩ	60-Seconds	PASS	
ESSAC Power Van	Van Frame	Disconnected Gnd Cable	Gnd Cable Disconnected from Gnd Stud					
	Van Frame	Ship Hull	Gnd Cable Connected to Gnd Stud					

A-3.0 FTHE START-UP & SHUT-DOWN PROCEDURES

Every time the FTHE system is to be operated, there are procedures and critical inspections that shall be conducted to confirm system readiness, to prevent equipment damage, and to ensure safe operations.

FTHE Prestart Inspections

Prior to powering up FTHE systems, the following Prestart Inspection Sheets shall be checked-off and signed by qualified inspector.

Table 1 FTHE Prestart Inspection Sheets (Unpowered)

FTHE PRESTART INSPECTION SHEET 1				
DATE / TIME		**INSPECTOR**		**SIGNATURE**
√	ITEM	ACTION	LOCATION	NOTES
FTHE CONTROL PEDESTAL				
	HC Switch	Verify HC switch in the LOCKED position	Lower right panel quadrant	Locks the Heave Compensator from operating
A-FRAME				
	Ball Valves (BV) BV-6 and BV-7	Verify ball valves OPEN	A-Frame, Main Cylinders	Ball valves used to isolate hydraulic oil between A-Frame cylinders and hydraulic headers.
	BV-8	Verify ball valve OPEN (handle vertical)	Under the DCV Station	
	A-Frame System Deck Area and DCV Station	Check for loose hoses, oil leaks or unusual conditions. Ensure no objects are on stops.	A-Frame, lower	The DCV Station is the local control for all operations of the A-Frame and Cursor.
	A-Frame DCV Station Controls	Move control levers to ensure range of motion	DCV Station, Top controls	Hydraulic control levers should be checked for proper lubrication
	A-Frame J-Box (JB-3) control cable connector	Verify cable/connector tightness	Manual DCV Station, forward end	Connector must be screwed in all the way to ensure proper contact of conductors.
	Load Pin connector	Verify cable connector tightness	DCV Station ECL13	
	Swing Frame and Cursor	Check for loose hoses, oil leaks or unusual conditions.	A-Frame Docking Head Platform	A-Frame Docking Head Platform *inspection required at least once per week.*
	Load Pin connector	Verify cable connector tightness	Swing Frame ECL11	*Inspection required at least once per week.*
	Cursor Winch Payout Limit Switch XS11	Verify switch-arm free for movement and inspect rope quality	Swing Frame Cursor	*Inspection required at least once per week.*

FTHE PRESTART INSPECTION SHEET 2				
DATE / TIME		**INSPECTOR**		**SIGNATURE**
√	ITEM	ACTION	LOCATION	NOTES
HYDRAULIC POWER UNIT (HPU)				
	Cooling water	Inspect and clean strainers	Behind HPU manifold, aft	Also check HC strainer prior to turning on the cooling water.
	Cooling water	Turn on & verify discharge	Overboard	
	LG-101	Verify oil visible in gauge	HPU Tank	Level Gauge preferably 4/5 full.
	HPU Low Voltage Enclosure (ENC103) connectors	Verify all cable/connector for tightness	Under (ENC103), aft, starboard side	
	Power Switch (ENC101)	Verify the power switch is in the OFF position	Fwd Center (ENC101)	
	Grounds	Verify clean & tightness	Fwd, Stbd	
	General hydraulic inspection	Check for loose hoses/leaks	Entire subsystem	
UMBILICAL WINCH AND LEVELWIND ASSEMBLY				
	Slip Ring connectors J4 & J6	Verify cable/connector tightness, ESAC Van or NFESC Control Van (ENC19)	Aft center on UW	
	UW Drum Count electrical connector	Verify cable/connector tightness	JB-106 fwd port on UW hyd. panel	
	UW Grounds	Verify clean & tightness	FWD PORT	
	UW Mtr Dist. hoses	Verify hose connector tight	UW fwd-stbd	
	Umbilical	Verify tight wraps and umbilical path free to travel	UW Drum & LW Sheave	
	Levelwind assembly	Verify free to travel	LW Sheave Sensor	Bottom of LW Sheave, hold umbilical to move (guide) pins back and forth. Adjust (ENC107) if umbilical is not centered vertically after power-up.
	Levelwind Carriage Assembly, Guide Bars, and Drive ACME Screw & diamond screw	Verify Guide Bars and ACME Drive Screw &diamond screw sufficiently greased	LW upper level	
	(ENC105)	Verify cable connector tightness	LW fwd-stbd upper level	
	General hydraulic inspection	Check for loose hoses/leaks	Entire subsystem	

FTHE PRESTART INSPECTION SHEET 3				
DATE / TIME		**INSPECTOR**		**SIGNATURE**
√	ITEM	ACTION	LOCATION	NOTES
HEAVE COMPENSATOR (HC)				
LOWER LEVEL				
	Power Switch	Verify the power switch is in the OFF position	High Voltage Panel (ENC8)	Indicator lamp should be off
	BV-9 & BV-11 (hyd.) control by CYL-15&16	Verify valves are CLOSED (handles in low position)	Base of ACC-1 and ACC-2	Ball valves used to isolate hydraulic oil to Main Cylinders CYL-13 & 14
	Intensifier oil level	Verify oil level midrange in sight glass (orange color)	Intensifier, aft	Oil reservoir for Intensifier
	LG-2	Verify oil level in site-tube	Storage Tank, port-fwd	Level Gauge, about 2/3 full (compare to marker line)
	Cooling Water	Inspect and clean strainer	Fwd-stbd below Storage Tank	Should do with HPU strainer check, prior to turning on cooling water
	Cooling Water	Turn ON & verify discharge		Flow gage should show >10GPM
	BV-10 (hydraulic)	Verify valve OPEN (**blue** handle, horizontal)	HC Hyd Panel, top-aft	Ball valve used to cross connect between HDR-12 and HDR-13
	BV-30 & BV-31 (hydraulic)	Verify valves are CLOSED (**red** handles horizontal)	HC Hyd Panel, middle-aft	Note: HANDLES REMOVED
	BV-32 (hydraulic)	Verify valve CLOSED (BLACK handle horizontal)	HC Hyd Panel, bottom-aft	Flying Head back-up lock valve (will be opened just prior to ops)
	BV-22 & BV-23	Verify valves are OPEN (**green** handle horizontal)	HC Hyd Panel, top-fwd	Isolates the Intensifier
	BV-29	Verify valve CLOSED (**red** handle, horizontal)	HC Hyd Panel, top-fwd	Isolates the Storage Bottles
	BV-12, BV-13, BV-15, BV-16	Verify valves are OPEN (**green** handles horizontal)	HC Hyd Panel, top-fwd	HDR-11: Ball valves used to isolate ACC-1 and ACC-2
	BV-24, BV-25, BV-26, BV-27, and BV-28	Verify valves are OPEN (**yellow** handles horizontal)	HC Hyd Panel, top-fwd	HDR-11: Ball valves used to isolate high press N2 receiver bottles
	BV-20	Verify valve CLOSED (**red** handle, horizontal)	HC Hyd Panel, bottom-fwd	Isolates the gas makeup bottles GMB-1, GMB-2 and GMB-3
	BV-TF	Verify valve CLOSED (**red** handle, horizontal)	HC Hyd Panel, bottom-fwd	Used for initial N2 charge of the Storage Tank, ACC-3, GB-1& GB-2
	BV-14, BV-GB1 and BV-GB2	Verify valves are OPEN (**green** handle horizontal)	HC Hyd Panel, bottom-fwd	HDR-16: Used for initial N2 charge of ACC-3, GB-1& GB-2
	BV-17 & BV-18	Verify valves are CLOSED (**red** handle, horizontal)	HC Hyd Panel, bottom-middle	Located below HDR 16, used with BV-TF to charge Storage Tank
	BV-38 & BV-39	OPEN both valves, turning handles in vertical position	HC aft, center	Top of GB-1 & GB-2
	General hydraulic inspection	Check for loose hoses/leaks	Entire system	
	Check Cable Ground	Check for loose connection	Entire system	

FTHE PRESTART INSPECTION SHEET 4				
DATE / TIME		**INSPECTOR**		**SIGNATURE**
√	ITEM	ACTION	LOCATION	NOTES
HEAVE COMPENSATOR (HC)				
UPPER LEVEL				
	GB-8, GB-9, GB-10, GB-11, GB-12, GB-13, GB-14, GB-15, GB-16, GB-17 & GB-18	OPEN valves on all eleven N2 Storage Bottles	N2 Bottle Rack, located on top of each bottle	Ball valves used to isolate N2 Storage Bottles. Open valves fully and then rotate handle back ¼ turn
	BV-33, BV-34, BV-35, BV-36 & BV-37	OPEN valves on all 5 blue N2 Receiver Bottles	N2 Bottle Rack, located on top of each bottle	Ball valves used to isolate N2 Receiver Bottles. Open valves fully, handles in vertical position
	BV-21	Verify OPEN (**green** handle vertical)	Gas Intensifier Panel, by red alarm horn	Ball valve used (in series with BV-22) to isolate high pressure N2 between receiver gas bottles and Intensifier
	Flying Head	Verify freedom to travel	Upper Level	
	General pneumatic inspection	Check all connection fittings and valves for leaks (listen for hiss)	Entire system Upper & Lower	Use soapy water to spray on connection points to visually see leaks form bubbles

Heave Compensator Valve Color Key:

Green - OPEN during operations

Red - CLOSED during operations

Yellow - Changes during operations

FTHE System Start-Up Procedures

The FTHE System Start-Up Procedures should be performed whenever the FTHE system is started in preparation for operation. Ensure that all personnel in the operation area are aware that system is about to be powered up and will move to appropriate safe zones if not wearing PPE (hard hats, steel toe boots, etc.).

Table 2 FTHE System Power-Up Procedures

FTHE SYSTEM POWER-UP PROCEDURES SHEET 1			
DATE / TIME		INSPECTOR	SIGNATURE
√	ITEM	ACTION	
UTILITIES			
	Cooling Water	Ensure that cooling water strainers are clean on both the HPU and HC. Ensure that cooling water is hooked up to both the HPU & HC, turn on water and then check the cooling water hose for proper discharge.	
	Electrical Power	Ensure Generator is OFF and all electrical cables and grounds are properly connected	
POWER DISTRIBUTION SYSTEM			
	Circuit Breakers	Open the PDS Main Power Transfer Switch Panel and ensure that the TWO circuit breakers for the HPU are in the OFF position, and the HC, and Spare are in the OFF position.	
	TS-2 Switch	Ensure the Transfer Switch toggle is in the NORMAL POWER position.	
	Genset Start-Up	Perform portable Generator start-up procedure by following the instructions from the manufacturer's operation manual.	
	Genset Warm-Up	Once the Generator has been started, check the panel meters to ensure correct voltage of 480VAC and frequency of 60Hz, adjust as needed.	
	TS-2 Indicators	Check that the PDS Transfer Switch (TS2) panel's NORMAL POWER green indicator lamp is on. Also check the Shark 100 panel meter to ensure correct readings for voltage of 480VAC and frequency of 60Hz.	
	Circuit Breakers	Open the PDS Main Power Transfer Switch Panel and turn ON both the HPU (225 & 250 Amp) circuit breakers. Turn ON the HC (225 Amp) circuit breaker. CHECK ALL GROUND CONNECTIONS.	
	Generator Set	Check all circuit breakers and grounds on both Gen Sets.	
HYDRAULIC POWER UNIT			
	HPU Power Switch	Turn the High Voltage switch at Power Isolation (ENC101) to ON.	
	Power Lamp	Verify power "OK" lamp at High Voltage Enclosure (ENC102) is illuminated.	
	Alarm Lamps	Verify Low Oil Level & High Oil Temperature alarm lamps are not lighted.	
	Heating Lamp	Hydraulic oil "Heating" lamp may be illuminated if oil temperature is low.	
	#1 START	Depress HPU #1 START button (High Voltage Panel) (ENC102)	
	#1 Running Lamp	Verify HPU #1 "Running" lamp is illuminated. (ENC102)	
	#1 Charge Gauge	Verify #1 Charge Pressure is about 390 psi, *otherwise* hit STOP & check.	

FTHE SYSTEM POWER-UP PROCEDURES SHEET 2			
DATE / TIME		INSPECTOR	SIGNATURE
√	ITEM	ACTION	
HYDRAULIC POWER UNIT - *continued*			
	#2 START	Depress HPU #2 START button (High Voltage Panel) (ENC102)	
	#2 Running Lamp	Verify HPU #2 "Running" lamp is illuminated. (ENC102)	
	#2 Charge Gauge	Verify #2 Charge Pressure is about 380 psi, *otherwise* hit STOP & check.	
	#1 Open Loop Gage	Verify #1 Auxiliary Pressure is approximately 3,000 psig	
	#2 Open Loop Gage	Verify #2 Auxiliary Pressure is approximately 3,000 psig	
	LW Pressure Gage	Verify Return Header Pressure is approximately 25 psig (max)	
	HPU System	Visually observe HPU for hydraulic oil leaks.	
	UW & AF	Visually observe Winch and A-Frame for hydraulic oil leaks.	
HEAVE COMPENSATOR			
	HC Power Switch	Move HC Power Breaker to ON (High Voltage Panel) (ENC8)	
	Power Lamp	Verify AC Power "OK" lamp is illuminated (ENC8).	
	Alarm Lamps	Verify Low Oil Level & High Oil Temperature alarm lamps are not lighted.	
	Boost Accum. Gas Press. Gage	Verify Boost Accumulator Gas Pressure is between 1,850 to 2,500 psig, depending on load. If not in range, then correct *prior* to starting system.	
	Intensifier	Verify Intensifier is operational by toggling Compensator – Raise & Lower	
	HC START	Depress the HC START button (High Voltage Panel) (ENC8)	
	Running Lamp	Verify HC "Running" lamp is illuminated (ENC8).	
	Open Loop Gage (& Boost Gas)	Verify Open Loop System Pressure at approximately 2,000 psig. Note: Boost Accum. Gas Press. will increase to same pressure.	
	Main Cyl Rod Gage	**Note:** Main Cylinders Rod End Pressure at 0 psig until HC mode active	
	Cooling Gage	*NOT USED*	
	Tank Press. Gage	Verify Tank Pressure is approximately 5 psi (maximum).	
	Storage Gas Gage	Verify Storage Bottles Gas Pressure is between 1,000 to 2,300 psig.	
	HC System	Visually observe HC for hydraulic oil leaks and listen for N2 leaks.	
	BV-32	***AFTER LAUNCH,*** Open BV-32 THEN CLOSE BV-10 just prior to activation of HC	
CONTROL VAN ELECTRONICS RACK			
	UPS Power	Depress and hold the UPS ON/OFF/STAND-BY button until the power LED is illuminated and an audible "beep" occurs (approximately 1 sec).	
	Test Shape Pwr	Turn the Test Shape Enclosure power switch to ON	
	Computer Power	Open the computer panel door, press the POWER button to "l" (ON), observe the POWER LED is lighted and the monitor illuminates.	
	Software Start	Visually observe that the computer automatically launches the *host.exe* application that provides the GUI display.	

FTHE System Shut-Down Procedures

The FTHE System Shut-Down Procedures should be followed whenever the FTHE system is secured from operation.

Table 3 FTHE System Shut-Down Procedures

DATE / TIME		INSPECTOR	SIGNATURE
√	ITEM	ACTION	
Heave Compensator - NOTE: Secure HC **prior to** recovering Test Shape onboard with A-Frame			
	HC System	Verify that all FTHE activities are complete and Flying Head is bottomed.	
	HC LOCK Switch	On Control Pedestal, flip "Heave Comp" toggle switch to LOCK position	
	BV-32	Close valve BV-32, handle horizontal (HC Hydraulic Panel – Lower Level)	
	HC STOP	Depress the HC STOP button (High Voltage Panel)	
	HC Power Switch	Move HC Power Breaker to OFF (High Voltage Panel)	
HEAVE COMPENSATOR - *Procedures after recovery and Test Shape secured to deck*			
	N2 Bottle Valves	Close valves BV-38 & BV-39 on top of GB-1 & GB-2 (lower level, aft)	
	BV-23	Close valve BV-23 (HC Hydraulic Panel – Lower Level)	
	BV-10	Open valve BV-10 to equalize hydraulic pressure between HDR-12 & HDR-13	
	High Pres. Valves	Close valves BV-22, BV-24, BV-25, BV-26, BV-27 & BV-28 (High Pressure)	
	N2 Bottle Valves	Close valves on all N2 cylinders in the Gas Bottle Rack (HC upper level)	
	HC System	Visually observe HC for hydraulic oil leaks and listen for N2 leaks.	
HYDRAULIC POWER UNIT			
	FTHE System	Verify that all FTHE operations are complete.	
	#1 STOP	Depress HPU #1 STOP button (ENC102)	
	#2 STOP	Depress HPU #2 STOP button (ENC102)	
	HPU Power Switch	Turn High Voltage switch at Power Isolation Enclosure (ENC101) to OFF.	
	HPU System	Visually observe HPU for hydraulic oil leaks.	
	UW, LW & AF	Visually observe Winch, Levelwind, and A-Frame for hydraulic oil leaks.	
A-FRAME			
	BV-8	Close BV-8 (to secure Swing Frame)	
	BV-6 & BV-7	Close BV-6 & BV-7 (to secure Luff)	
CONTROL VAN ELECTRONICS CABINET			
	Computer OFF	Depress "CTRL-ALT-DEL" keys simultaneously on the Remote Control keyboard and select "Shutdown" with the cursor.	
	Test Shape OFF	Depress the Test Shape Enclosure power switch to OFF	
	UPS OFF Button	Depress and hold the UPS ON/OFF/STAND-BY button until the power LED extinguishes and an audible "beep" occurs.	
UTILITIES			
	Electrical Power	Shut off breakers in PDS Main Breaker Panel and Genset Power Switch	
	Cooling Water	Turn off the cooling water to both the HPU and HC.	

A-4.0 FTHE CHECKS FOR DEPLOYING VEHICLE

The following commands/items may be heard over the headphones and those specifically directed (or pertain) to the FTHE Operator are highlighted in yellow.

Start GUIs
Establish Comms with Deck
Ensure ground strap is on vehicle
Apply instrument power
Establish telemetry … conduct Console start-up
Install tag lines to vehicle
Enable Swing Frame and line up with vehicle
Place 2,000 psi tension on umbilical/vehicle
Unlatch Docking Head and lower Cursor to vehicle
Ensure Cursor is latched to vehicle Lift Ring
Note Comps and analog signals
Power note heading AHRS heading and INU heading
Enable Data-Logger-WTMS
Enable constant tension
Unstrap vehicle
Unstrap manipulators
Disable Swing Frame
Raise Cursor/vehicle to the Docking Head (ensure locked in the Docking Head)
Remove tag lines
Remove ground strap
Luff out vehicle
Zeroize FTHE umbilical counter
Enable Thrusters
Apply utility power (3-phase)
Turn on vehicle's HPUs

- WTMS HPUs @ 2,500 psi / WROV HPU @ 1,500 psi
- Extend DVL arm

Unlatch Cursor from Docking Head and lower vehicle to approximate 35-feet depth
Turn on WTMS; CTD; Altimeter; DVL; WTM inform INS (DVL)
Disable constant tension of umbilical
Payout Cursor Winch to slack cables
Unlatch Cursor and raise Cursor to Docking Head
Place WTMS in Heading Auto Modify
Vehicle Heave Comp fully raised; manual mode
Request remote control of the Winch
Lower vehicle to desired altitude
Turn on FTHE Heave Comp/Manual Passive

A-5.0 FTHE CHECKS FOR RECOVERING VEHICLE

The following commands/items may be heard over the headphones and those specifically directed (or pertain) to the FTHE Operator are highlighted in yellow.

Shut off FTHE Heave Comp and lock cylinders
Docking: Exit NAV mode; manual: SK; depth; heading; reduce 1,500 psi pressure
Adjust vehicle's heading transverse to ship; AHRS; INU; ship
Recover to a depth of 35 feet
Place vehicle Heave Comp in manual
Command vehicle Heave Comp down
Retract DVL arm
Disable remote control of the Winch
Unlatch Docking Head
Lower Cursor to vehicle
Ensure Cursor is locked to vehicle locking ring
Place FTHE in constant tension
Place WTMS into heading manual
Power off all lights on WTMS & WROV
Power off WTMS and WROV APS and FLS
Power off WMTS and WROV ASP Trays
Hydraulics off, power off Manipulator Arms and Master Controller
Lift vehicle to the Docking Head
Ramp down hydraulics and secure
WTMS: heading – manual
Open 3-phase power relay, turn off utility power
Disable Swing Frame
Luff in vehicle
Stop data logger and archive on vehicle cameras
Enable Swing Frame
Apply ground strap
Apply tag lines
Adjust saw horses if needed
Unlatch Cursor from the Docking Head and lower to sawhorses
Strap down vehicle
Serial sensors off: WTMS: DVL, INU, ALT. CTD: WROV: AHRS, DVL, ALT
Secure cameras
Note Comps
Secure vehicle instrument power
Disable constant tension
Unlatch Cursor and raise Cursor to the Docking Head
Reduce tension on the umbilical to 600 lbs
Communicate to crew:
Shut off FTHE, FTHE generator, and ship's cooling water supply to FTHE

A-6.0 FTHE DEPLOYMENT PROCEDURES

Prerequisite: All startup inspections and procedures must be completed prior to start!

DECK LEADER (DL) PREPARATIONS

- Establish Communications with all manned stations (perform radio check)
- Request permission from the Bridge to deploy the Test Shape
- Direct Control #2 (C2) to launch the Test Shape following below procedures

FTHE OPERATOR DEPLOYMENT PROCEDURES

1) **C2 HAUL-IN ON WINCH TO 2000 – 3000 LBS** winch tension
2) **C2 ENABLE SWING FRAME** – Level as required
3) **HAUL-IN ON CURSOR WINCH AND OPEN CURSOR LATCHS ON DOCKING HEAD**
4) DL confirms all 4 indicators unlatched
5) **PAY-OUT ON CURSOR WINCH** down to Test Shape
6) Ensure **Cursor Latch *lamp*** is on, indicating the cursor latches are engaged (DL confirms)
7) DL directs Deck Crew to remove tie downs
8) **C2 ENABLE CONSTANT TENSION** and verify **Winch Brake Release *lamp*** is on
9) **C2 HAUL-IN ON CUSOR WINCH** to Docking Head
10) DL confirms all 4 indicators latched
11) **C2 DISABLE SWING FRAME**
12) Deck Crew to recover tag lines as soon as Cursor is confirmed locked in Docking Head
13) **C2 LUFF OUT A-FRAME**
14) **C2 HAUL-IN ON CURSOR WINCH AND OPEN CURSOR LATCHS ON DOCKING HEAD**
15) DL confirms all 4 indicators unlatched
16) **C2 PAY-OUT ON CURSOR WINCH TO 35-FT DEPTH**
17) **C2 DISABLE CONSTANT TENSION**
18) **C2 ENABLE SWING FRAME**
19) **C2 PAY-OUT ON CURSOR WINCH UNTIL LOAD INCREASES** (on winch tension display)
20) **C2 UNLATCH ROV CURSOR** (*hold* lever until green light out)
21) **C2 HAUL-IN ON CURSOR WINCH** to Docking Head (DL confirms 4 latched)
22) **C2 PAY-OUT ON WINCH TO 100-FT DEPTH**
23) **C3 START HEAVE COMP**
24) **C3 OPEN BV-32** (on HC Hydraulic Panel)
25) **C2 UNLOCK HEAVE COMP**
26) **C3 RAISE FLYING HEAD TO MID-STROKE** (ENC8)
27) **C1 ACTIVATE AUTO-PASSIVE**
28) **C2 PAY-OUT ON WINCH AS DIRECTED BY C1**

A-7.0 FTHE RECOVERY PROCEDURES

DECK LEADER (DL) PREPARATIONS

- DL is informed by Control #1 (C1) that tests are complete and ready to recover

FTHE OPERATOR RECOVERY PROCEDURES

1) **C1 PUT HEAVE COMP IN MANUAL-PASSIVE**
2) **C2 HAUL-IN ON WINCH TO 100-FT DEPTH**
3) **C3 LOWER COMPENSATOR** until **Accumulator Gas Pressure** is 600psi
4) DL verifies **HC Flying Head** is in full down position
5) **C2 LOCK HEAVE COMP**
6) **C3 SHUT DOWN HEAVE COMP** (**STOP *button*** on Enclosure ENC8)
7) **C3 CLOSE BV-32** (on HC Hydraulic Panel)
8) **C2 HAUL-IN ON WINCH TO 35-FT DEPTH**
9) **C2 HAUL-IN ON CURSOR WINCH AND OPEN CURSOR LATCHES ON DOCKING HEAD**
10) DL confirms all 4 indicators unlatched
11) **C2 PAY-OUT ON CURSOR WINCH UNTIL LOAD INCREASES** (on winch tension display)
12) **C2 HAUL-IN ON CURSOR WINCH TO REDUCE WINCH TENSION TO 2000 – 3000 LBS**
13) **C2 ENABLE CONSTANT TENSION** and verify **Winch Brake Release *lamp*** is on
14) **C2 HAUL-IN ON CURSOR WINCH** to Docking Head
15) DL confirms all 4 indicators latched
16) **C2 DISABLE SWING FRAME**
17) **C2 LUFF IN A-FRAME**
18) **C2 ENABLE SWING FRAME** – Level as required
19) **C2 HAUL-IN ON CURSOR WINCH AND OPEN CURSON LATCHES ON DOCKING HEAD**
20) DL confirms all 4 indicators unlatched
21) **C2 PAY-OUT on Cursor Winch** to Test Shape
22) **C2 DISABLE CONSTANT TENSION**
23) **C2 PAY-OUT ON CURSOR WINCH** to Lower Test Shape to Deck
24) DL directs Deck Crew to secure Test Shape to deck
25) **C2 UNLATCH ROV LATCHES** (*hold* lever until green light is out)
26) **C2 HAUL-IN ON CURSOR WINCH** (DL confirms all 4 indicators latched)
27) DL communicates to all stations that recovery is complete
28) Perform Shut-Down Procedures
29) Perform wash down of equipment (Test Shape, Cursor, etc.)

[This page intentionally left blank]

APPENDIX B – FTHE DRAWING PACKAGE

This appendix provides the manufacturer's general arrangement and assembly drawings, hydraulic and electrical schematic drawings, control panel drawings, and other drawings. The Dynacon Drawing Package (and updated red-lines as appropriate) is printed in hard copy on B-size sheets (11" x 17") and bound in separate binder. A drawing index is provided as follows:

FTHE GENERAL ARRANGEMENT & ASSEMBLY DRAWINGS

DWG NO.	REV	DRAWING NAME
0707-0000-01	Rev -	Launch and Recovery System General Arrangement
0707-0000-04	Rev B	A-Frame Ship Interface (2 Sheets)
0707-0000-13	Rev A	A-Frame Deck Loads (3 Sheets)
0707-0000-14	Rev -	Heave Compensator Deck Loading (2 Sheets)
1088-0005-01	Rev -	Storage Winch & OHRALW 12,815-FT Capability Deck Load (2 Sheets)
1088-1001-01	Rev A	Winch and Levelwind General Assembly (2 Sheets)
1088-1001-02	Rev -	Winch Assembly (3 Sheets)
1088-1003-01	Rev A	Winch Drum Assembly (3 Sheets)
1088-1004-02	Rev -	Winch Drum Spring Applied Brake Assembly
1088-1004-03	Rev -	Winch Drum Pressure Applied Brake Assembly
1088-1006-05	Rev -	Winch Drum Shroud Assembly (Left Side)
1088-1006-06	Rev -	Winch Drum Shroud Assembly (Right Side)
1088-1006-33	Rev -	Levelwind Platform Assembly
1088-1006-50	Rev -	Umbilical Winch Cable Guard Assembly
1088-1007-51	Rev -	Winch Assembly Forward Tie-Down Weldment
1088-1007-52	Rev -	Winch Assembly Port Short Tie Down Weldment
1088-1007-53	Rev -	Winch Assembly Port Long Tie Down Weldment
1088-1007-54	Rev -	Winch Assembly Starboard Tie Down Weldment
1088-2001-01	Rev -	Levelwind Assembly (3 Sheets)
1088-2001-02	Rev -	Levelwind General Assembly (2 Sheets)
1088-2001-10	Rev -	Winch Drum Spray Bar (Flared with Fittings)
1088-2003-01	Rev -	Levelwind Sheave Assembly (2 Sheets)
0377-2008-02	Rev B	Levelwind Sensor *[Item 14 of 1088-2003-01]*
1088-2003-02	Rev -	Sheave Assembly
1088-2005-01	Rev -	Levelwind Drive Assembly (3 Sheets)
1088-2005-25	Rev -	Diamond Screw Assembly (2 Sheets)
1088-2005-47	Rev -	Diamond Screw Anti-Rotate Track Assembly
1088-2006-01	Rev -	Levelwind Carriage Assembly

FTHE GENERAL ARRANGEMENT & ASSEMBLY DRAWINGS - *continued*

DWG NO.	REV	DRAWING NAME
1088-3001-01	Rev -	Hydraulic Power Unit General Assembly (5 Sheets)
1088-3001-02	Rev -	Hydraulic Power Unit Tie Down Weldment
1088-3003-01	Rev -	Hydraulic Power Unit Oil Reservoir Assembly (3 Sheets)
1088-3005-01	Rev -	Hydraulic Power Unit Pump Train Assembly
1088-3007-80	Rev -	Hydraulic Power Unit Platform Assembly
0707-5001-01	Rev -	Cursor Assembly (4 Sheets)
0707-5003-01	Rev -	Lift Winch Assembly (Left)
0707-5003-11	Rev -	Lift Winch Assembly (Right)
0707-5007-30	Rev -	ROV Interface Catch Ring Weldment
0707-5007-35	Rev -	ROV Interface Plate Underbelly Bars
0707-5007-40	Rev -	Heave Compensator Platform
0707-6001-01	Rev -	A-Frame General Assembly (2 Sheets)
0707-6001-03	Rev -	Docking Head General Assembly (2 Sheets)
0707-6003-01	Rev -	Docking Head Sheave Assembly (2 Sheets)
0707-6006-02	Rev -	Catch and Latch Assembly (2 Sheets)
0707-6006-50	Rev -	Docking Head Cushion Assembly
0396-6007-34	Rev -	A-Frame Base Plate
0396-6007-35	Rev -	A-Frame Base Mounting Plate
0707-6007-53	Rev -	Docking Head Platform Weldment (4 Sheets)
0707-7000-01	Rev A	Heave Compensator General Arrangement
1088-7001-01	Rev -	Lower Turning Sheave Assembly
0707-7001-01	Rev -	Heave Compensator General Assembly (4 Sheets)
0707-7001-02	Rev -	Heave Compensator Lower Head Assembly
0707-7001-03	Rev -	Heave Compensator Flying Head Assembly
0707-7001-05	Rev A	Cylinder/Valve Accumulator/Manifold Assembly (2 Sheets)
0707-7007-60	Rev -	Heave Compensator Gas Bottle Rack Assembly
0707-7101-01	Rev -	Heave Compensator Guard Installation *Missing*
1088-7101-01	Rev -	Upper Turning Sheave Assembly
396-6004-01	Rev -	Heel Pin Bronze Bushing (FTHE A-Frame)
396-6004-02	Rev -	Heel Pin Bushing (FTHE A-Frame)
396-6004-04	Rev -	Cylinder Pin Bronze Bushing (FTHE A-Frame)
396-6007-34	Rev -	A-Frame Base Plate
396-6007-35	Rev -	A-Frame Base Mounting Plate

FTHE HYDRAULIC SCHEMATIC DRAWINGS

DWG NO.	REV	DRAWING NAME
1088-8002-02	Rev -	Hydraulic Power Unit Valve Panel Assembly
1088-8331-01	Rev A	Dual Hydraulic Power Unit Hydraulic Schematic Diagram (3 Sheets)
1088-8339-01	Rev A	Dual Hydraulic Power Unit Component Specification (10 Sheets)
1088-8339-02	Rev A	Dual Hydraulic Power Unit Flow Line Schedule (3 Sheets)
1088-8339-03	Rev A	Dual Hydraulic Power Unit Fittings Schedule (5Sheets)
1088-8339-10	Rev -	Dual Hydraulic Power Unit Hydraulic Component Settings (2 Sheets)
1088-8211-01	Rev A	Winch System Hydraulic Schematic Diagram
1088-8219-01	Rev A	Winch System Component Specification (7 Sheets)
1088-8219-02	Rev A	Winch System Flow Line Schedule (2 Sheets)
1088-8219-03	Rev A	Winch System Fittings Schedule (3Sheets)
1088-8219-10	Rev -	Winch System Component Settings (2 Sheets)
0707-8101-01	Rev C	A-Frame/Docking Head/Cursor Hydraulic Schematic
0707-8109-01	Rev A	Hydraulic Diagram Component Specification (7 Sheets)
0707-8109-02	Rev A	A-Frame/Docking Head/Cursor Flow Line Schedule (8 Sheets)
0707-8109-03	Rev B	Hydraulic Schematic Diagram Fittings Schedule (6 Sheets)
0707-8109-10	Rev -	Hydraulic Diagram Component Settings (2 Sheets)
0707-8201-01	Rev C	Heave Compensator Hydraulic Schematic
0707-8209-01	Rev B	Heave Compensator Component Specification (15 Sheets)
0707-8209-02	Rev B	Heave Compensator Flow Line Schedule (6 Sheets)
0707-8209-03	Rev B	Hydraulic Schematic Diagram Fittings Schedule (8 Sheets)
0707-8209-10	Rev -	Hydraulic Diagram Component Settings (3 Sheets)
0707-8000-01	Rev A	Heave Compensator Hydraulic Component Layout
0707-8301-01	Rev C	Gas Reclamation Pump Gas Circuit
0707-8309-01	Rev B	Gas Reclamation Component Specification (3 Sheets)
0707-8309-02	Rev A	Gas Reclamation Pump Gas Circuit Flow Lines (3 Sheets)
0707-8309-03	Rev A	Gas Reclamation Fittings Schedule (3 Sheets)
0707-8309-10	Rev -	Hydraulic Diagram Component Settings (2 Sheets)

FTHE PANEL DRAWINGS

DWG NO.	REV	DRAWING NAME
0707-8002-10	Rev -	Heave Compensator Pressure Gauge Panel
1088-8032-01	Rev -	Hydraulic Power Unit Gauge Panel
1088-9002-02	Rev -	HPU Start Panel
0707-9002-02	Rev -	Control Room Panel (2 Sheets)
0707-9002-03	Rev -	Compensator HPU Start Panel (2 Sheets)
1088-9002-04	Rev A	Local Control Enclosure
1088-9002-07	Rev -	Levelwind Control Enclosure

FTHE ELECTRICAL SCHEMATIC DRAWINGS

DWG NO.	REV	DRAWING NAME
0707-9000-01	Rev B	A-Frame / Winch Electrical Block Diagram
1088-9000-01	Rev A	Winch Electrical Block Diagram (2 Sheets)
0707-9000-02	Rev B	Heave Compensator System Electrical Block Diagram
1088-9001-02	Rev B	Winch System High Voltage Enclosure Electrical Diagram
1088-9001-03	Rev B	Low Voltage Enclosure Electrical Diagram (2 Sheets)
1088-9001-04	Rev B	Local Control Electrical Diagram
0707-9001-04	Rev B	Control Cabin Panel Electrical Diagram
1088-9001-05	Rev A	Levelwind Enclosure Electrical Schematic
1088-9001-06	Rev A	Winch Junction Box Wiring Diagram
1088-9001-07	Rev A	Levelwind Control Enclosure Diagram
0707-9001-06	Rev B	A-Frame Junction Boxes Electrical Diagram
0707-9001-07	Rev D	Heave Compensator Low Voltage Electrical Diagram
0707-9001-08	Rev B	Heave Compensator High Voltage Enclosure Electrical Diagram
0707-9001-09	Rev B	Gas Intensifier Electrical Schematic
0707-9001-10	Rev B	Computer Interface & Signal Condition Enclosure Electrical Diagram (3 Sht)
DYN-9600-01	Rev K	Electro-Active Levelwind Control PC Board *[PCB102]*
1088-9009-01	Rev A	Electrical System Component Specification (14 Sheets)
1088-9009-02	Rev A	Electrical System Fittings Specification (2 Sheets)
1088-9009-03	Rev A	Electrical System Wire Specification (2 Sheets)
1088-9009-10	Rev -	Electrical System Component Specification (5 Sheets)
624-6003-35	Rev -	Docking Head Load Pin

NFESC & CONTRACTOR DRAWINGS SINCE FTHE DELIVERY

Other drawings and sketches relating to the FTHE System since delivery from DYNACON, but not necessarily referred to in the technical manual, are listed below.

DWG NO.	REV	DRAWING NAME
176-1508-00	Rev 2	EOSR Installation For General Dynamics (2 Sheets)
A113882	Rev -	Umbilical Assembly - Terminated (10 Sheets)
SDA113882	Rev A	Umbilical Assembly - Terminated - Schematic Diagram
A128310	N/A	Reel Mounting Welding and Machining DWT (2 Sheets)
A128311	Rev U1	HC Drip Awning DWT
A128312	Rev U1	HPU Drip Awning DWT
A128313	Rev A	Cable Running Sheet (8 Sheets)
A128319	Rev -	Docking Head Sheave Flaring Modification
A305428	-	Dataline Umbilical Cable Specification Sh3et
3B Filters	N/A	How to Order
3B Filters	N/A	Service Instructions (2 Sheets)
S8312SN	N/A	Filter Assembly
	Rev –	Connector & Cable Part Number Master List
1025-015-02	Rev -	FTHE A-Frame IRC-1 Power Feed
AF-01-D100	Rev -	FTHE A-Frame Base Heel Pin Keeper Bar
AF-01-D101	Rev -	A-Frame Shims
AF-01-D102	Rev -	Existing A-Frame Modifications
AF-02-D100	Rev -	A-Frame Double Acting Brace Assembly
1008-EJ2-001	Rev -	FTHE Cable Bridge and Walkway
CL-01-D103	Rev 1	Docking Collar Assembly Drawing
CL-01-D500	Rev 1	Umbilical Termination Clevis
CL-01-D700	Rev 1	Heave Compensator Assembly Drawing
CL-01-D702	Rev 1	LVDT Rotation-to-Vertical Motion Converter

NFESC & CONTRACTOR DRAWINGS SINCE FTHE DELIVERY - *continued*

DWG NO.	REV	DRAWING NAME
CL-01-D900	Rev 1	Test Shape Frame Assembly
CL-01-D901	Rev 1	Test Shape Top Frame Weldment
CL-01-D902	Rev 1	Test Shape Bottom Frame Weldment
CL-02-D800	Rev 1	Heave Compensator Catwalk & Ladder Cage Assembly
CL-02-D802	Rev 1	Heave Compensator Catwalk Assembly
CL-02-D805	Rev 1	Heave Compensator Ladder Cage Assembly
CL-02-D806	Rev 1	Cabinet Mounting Bracket Weldment and Assembly
CL-03-D500	Rev 1	Catwalk Modification Assembly Drawing
CL-03-D501	Rev 1	Right Cursor Catwalk Assembly
CL-03-D502	Rev 1	Center Cursor Catwalk Assembly
CL-03-D503	Rev 1	Left Cursor Catwalk Assembly
CL-04-D400	Rev 1	Access Step Assembly
CL-05-D100	Rev -	FTHE Transfer Switch Rack Assembly (PDS)
CL-05-D101	Rev -	FTHE Transfer Switch Rack
CL-05-D102	Rev -	PDS Pierside Stabilizer
CL-06-D100	Rev -	FTHE Video Camera System Schematic
63060-001	Rev 0	SCE Control Can, End Cap I/O (FTHE Test Shape Electronic Bottle)
63062-001	Rev 0	SCE Control Can Assembly (FTHE Test Shape Electronic Bottle)
63094-001	Rev A	SCE Control Can Internal Assembly (FTHE Test Shape Electronic Bottle)
A096-101	Rev –	SEACON MINR-4FOSM-CCPL-PBOF Assembly
A097-101	Rev –	SEACON MINR-6FO-FCRL Assembly
5999-1435-0013	Rev –	Burton Cable Assembly 5999-1435-0013
5999-1436-C015	Rev –	Burton Cable Assembly 5999-1436-C015
5999-1437-C008	Rev –	Burton Cable Assembly 5999-1437-C008

APPENDIX C – FTHE MATERIAL SAFETY DATA SHEETS

Material Safety Data Sheets (MSDS) of all identified potentially hazardous materials to be used for operation of the Field Test Handling Equipment have been compiled and provided in this appendix. An index list of these Material Safety Data Sheets (MSDS) is as follows:

ITEM	DESCRIPTION
1	Alvania™ RL Grease 3
2	Chevron Delo® Grease EP
3	Dow Corning(R) 4 Electrical Insulating Compound
4	Lubriplate® Gear Shield Extra Heavy (AEROSOL)
5	Mobil Delvac 1230
6	Marine-Kopr, Marine Anti-seize Compound by Jet-Lube
7	Mystik® JT-6® Hi-Temp Grease, No. 2
8	Mystik® JT-6® Multi-purpose Grease, No. 2
9	Nuvair™ 751
10	Royal Purple Ltd. Max Gear®
11	Royal Purple Ltd. Wire Rope Lubricant
12	Chevron RANDO HD ISO 68, Hydraulic Fluid

[This page intentionally left blank]

Material Safety Data Sheet

1. MATERIAL AND COMPANY IDENTIFICATION

Material Name : **Alvania Grease RL 3**
Uses : Automotive and industrial grease.

Manufacturer/Supplier : **SOPUS Products**
PO BOX 4427
Houston, TX 77210-4427
USA
MSDS Request : 877-276-7285

Emergency Telephone Number
Spill Information : 877-242-7400
Health Information : 877-504-9351

2. COMPOSITION/INFORMATION ON INGREDIENTS

The highly refined mineral oil contains <3% (w/w) DMSO-extract, according to IP346.
A lubricating grease consisting of highly-refined mineral oil and additives.

3. HAZARDS IDENTIFICATION

Emergency Overview

Appearance and Odour : Brown. Semi-solid. Slight hydrocarbon.

Health Hazards : High-pressure injection under the skin may cause serious damage including local necrosis.
Safety Hazards : Not classified as flammable but will burn.
Environmental Hazards : Not classified as dangerous for the environment.

Health Hazards : Not expected to be a health hazard when used under normal conditions.

Health Hazards
Inhalation : Under normal conditions of use, this is not expected to be a primary route of exposure.
Skin Contact : Prolonged or repeated skin contact without proper cleaning can clog the pores of the skin resulting in disorders such as oil acne/folliculitis.
Eye Contact : May cause slight irritation to eyes.
Ingestion : Low toxicity if swallowed.
Other Information : High-pressure injection under the skin may cause serious damage including local necrosis. Used grease may contain harmful impurities.

Signs and Symptoms : Local necrosis is evidenced by delayed onset of pain and tissue damage a few hours following injection. Oil acne/folliculitis signs and symptoms may include formation of black pustules and spots on the skin of exposed areas. Ingestion may result in nausea, vomiting and/or diarrhoea.

Aggravated Medical Condition	:	Pre-existing medical conditions of the following organ(s) or organ system(s) may be aggravated by exposure to this material: Skin.
Environmental Hazards	:	Not classified as dangerous for the environment.
Additional Information	:	Under normal conditions of use or in a foreseeable emergency, this product does not meet the definition of a hazardous chemical when evaluated according to the OSHA Hazard Communication Standard, 29 CFR 1910.1200.

4. FIRST AID MEASURES

General Information	:	Not expected to be a health hazard when used under normal conditions.
Inhalation	:	No treatment necessary under normal conditions of use. If symptoms persist, obtain medical advice.
Skin Contact	:	Remove contaminated clothing. Flush exposed area with water and follow by washing with soap if available. If persistent irritation occurs, obtain medical attention. When using high pressure equipment, injection of product under the skin can occur. If high pressure injuries occur, the casualty should be sent immediately to a hospital. Do not wait for symptoms to develop. Obtain medical attention even in the absence of apparent wounds.
Eye Contact	:	Flush eye with copious quantities of water. If persistent irritation occurs, obtain medical attention.
Ingestion	:	In general no treatment is necessary unless large quantities are swallowed, however, get medical advice.
Advice to Physician	:	Treat symptomatically. High pressure injection injuries require prompt surgical intervention and possibly steroid therapy, to minimise tissue damage and loss of function. Because entry wounds are small and do not reflect the seriousness of the underlying damage, surgical exploration to determine the extent of involvement may be necessary. Local anaesthetics or hot soaks should be avoided because they can contribute to swelling, vasospasm and ischaemia. Prompt surgical decompression, debridement and evacuation of foreign material should be performed under general anaesthetics, and wide exploration is essential.

5. FIRE FIGHTING MEASURES

Clear fire area of all non-emergency personnel.

Flash point	:	> 200 °C / 392 °F (COC)
Upper / lower Flammability or Explosion limits	:	Typical 1 - 10 %(V)(based on mineral oil)
Auto ignition temperature	:	> 320 °C / 608 °F
Specific Hazards	:	Hazardous combustion products may include: A complex mixture of airborne solid and liquid particulates and gases (smoke). Carbon monoxide. Unidentified organic and inorganic compounds.

Suitable Extinguishing Media	:	Foam, water spray or fog. Dry chemical powder, carbon dioxide, sand or earth may be used for small fires only.
Unsuitable Extinguishing Media	:	Do not use water in a jet.
Protective Equipment for Firefighters	:	Proper protective equipment including breathing apparatus must be worn when approaching a fire in a confined space.

6. ACCIDENTAL RELEASE MEASURES

Avoid contact with spilled or released material. For guidance on selection of personal protective equipment see Chapter 8 of this Material Safety Data Sheet. See Chapter 13 for information on disposal. Observe all relevant local and international regulations.

Protective measures	:	Avoid contact with skin and eyes. Use appropriate containment to avoid environmental contamination. Prevent from spreading or entering drains, ditches or rivers by using sand, earth, or other appropriate barriers.
Clean Up Methods	:	Shovel into a suitable clearly marked container for disposal or reclamation in accordance with local regulations.

7. HANDLING AND STORAGE

General Precautions	:	Use local exhaust ventilation if there is risk of inhalation of vapours, mists or aerosols. Properly dispose of any contaminated rags or cleaning materials in order to prevent fires. Use the information in this data sheet as input to a risk assessment of local circumstances to help determine appropriate controls for safe handling, storage and disposal of this material.
Handling	:	Avoid prolonged or repeated contact with skin. Avoid inhaling vapour and/or mists. When handling product in drums, safety footwear should be worn and proper handling equipment should be used.
Storage	:	Keep container tightly closed and in a cool, well-ventilated place. Use properly labelled and closeable containers. Storage Temperature: 0 - 50 °C / 32 - 122 °F
Recommended Materials	:	For containers or container linings, use mild steel or high density polyethylene.
Unsuitable Materials	:	PVC.
Additional Information	:	Polyethylene containers should not be exposed to high temperatures because of possible risk of distortion.

8. EXPOSURE CONTROLS/PERSONAL PROTECTION

Occupational Exposure Limits

Material	Source	Type	ppm	mg/m3	Notation
Oil mist, mineral	ACGIH	TWA(Mist.)		5 mg/m3	
Oil mist, mineral	ACGIH	STEL(Mist.)		10 mg/m3	

Additional Information	:	Due to the product's semi-solid consistency, generation of mists and dusts is unlikely to occur.
Exposure Controls	:	The level of protection and types of controls necessary will vary depending upon potential exposure conditions. Select controls based on a risk assessment of local circumstances. Appropriate measures include: Adequate ventilation to control airborne concentrations. Where material is heated, sprayed or mist formed, there is greater potential for airborne concentrations to be generated.
Personal Protective Equipment	:	Personal protective equipment (PPE) should meet recommended national standards. Check with PPE suppliers.
Respiratory Protection	:	No respiratory protection is ordinarily required under normal conditions of use. In accordance with good industrial hygiene practices, precautions should be taken to avoid breathing of material. If engineering controls do not maintain airborne concentrations to a level which is adequate to protect worker health, select respiratory protection equipment suitable for the specific conditions of use and meeting relevant legislation. Check with respiratory protective equipment suppliers. Where air-filtering respirators are suitable, select an appropriate combination of mask and filter. Select a filter suitable for combined particulate/organic gases and vapours [boiling point >65 °C (149 °F)].
Hand Protection	:	Where hand contact with the product may occur the use of gloves approved to relevant standards (e.g. Europe: EN374, US: F739) made from the following materials may provide suitable chemical protection: PVC, neoprene or nitrile rubber gloves. Suitability and durability of a glove is dependent on usage, e.g. frequency and duration of contact, chemical resistance of glove material, glove thickness, dexterity. Always seek advice from glove suppliers. Contaminated gloves should be replaced. Personal hygiene is a key element of effective hand care. Gloves must only be worn on clean hands. After using gloves, hands should be washed and dried thoroughly. Application of a non-perfumed moisturizer is recommended.
Eye Protection	:	Wear safety glasses or full face shield if splashes are likely to occur.
Protective Clothing	:	Skin protection not ordinarily required beyond standard issue work clothes.
Monitoring Methods	:	Monitoring of the concentration of substances in the breathing zone of workers or in the general workplace may be required to confirm compliance with an OEL and adequacy of exposure controls. For some substances biological monitoring may also be appropriate.
Environmental Exposure Controls	:	Minimise release to the environment. An environmental assessment must be made to ensure compliance with local environmental legislation.

9. PHYSICAL AND CHEMICAL PROPERTIES

Appearance	:	Brown. Semi-solid.
Odour	:	Slight hydrocarbon.
pH	:	Not applicable.
Initial Boiling Point and Boiling Range	:	Data not available
Dropping point	:	> 180 °C / 356 °F
Flash point	:	> 200 °C / 392 °F (COC)
Upper / lower Flammability or Explosion limits	:	Typical 1 - 10 %(V) (based on mineral oil)
Auto-ignition temperature	:	> 320 °C / 608 °F
Vapour pressure	:	< 0.5 Pa at 20 °C / 68 °F (estimated value(s))
Density	:	Typical 900 kg/m3 at 15 °C / 59 °F
Water solubility	:	Negligible.
n-octanol/water partition coefficient (log Pow)	:	> 6 (based on information on similar products)
Kinematic viscosity	:	Not applicable.
Vapour density (air=1)	:	> 1 (estimated value(s))
Evaporation rate (nBuAc=1)	:	Data not available

10. STABILITY AND REACTIVITY

Stability	:	Stable.
Conditions to Avoid	:	Extremes of temperature and direct sunlight.
Materials to Avoid	:	Strong oxidising agents.
Hazardous Decomposition Products	:	Hazardous decomposition products are not expected to form during normal storage.

11. TOXICOLOGICAL INFORMATION

Basis for Assessment	:	Information given is based on data on the components and the toxicology of similar products.
Acute Oral Toxicity	:	Expected to be of low toxicity: LD50 > 5000 mg/kg , Rat
Acute Dermal Toxicity	:	Expected to be of low toxicity: LD50 > 5000 mg/kg , Rabbit
Acute Inhalation Toxicity	:	Not considered to be an inhalation hazard under normal conditions of use.
Skin Irritation	:	Expected to be slightly irritating. Prolonged or repeated skin contact without proper cleaning can clog the pores of the skin resulting in disorders such as oil acne/folliculitis.
Eye Irritation	:	Expected to be slightly irritating.
Respiratory Irritation	:	Inhalation of vapours or mists may cause irritation.
Sensitisation	:	Not expected to be a skin sensitiser.
Repeated Dose Toxicity	:	Not expected to be a hazard.
Mutagenicity	:	Not considered a mutagenic hazard.
Carcinogenicity	:	Product contains mineral oils of types shown to be non-carcinogenic in animal skin-painting studies. Highly refined mineral oils are not classified as carcinogenic by the International Agency for Research on Cancer (IARC). Other components are not known to be associated with carcinogenic effects.
Reproductive and Developmental Toxicity	:	Not expected to be a hazard.

Additional Information : Used grease may contain harmful impurities that have accumulated during use. The concentration of such harmful impurities will depend on use and they may present risks to health and the environment on disposal. ALL used grease should be handled with caution and skin contact avoided as far as possible. High pressure injection of product into the skin may lead to local necrosis if the product is not surgically removed.

12. ECOLOGICAL INFORMATION

Ecotoxicological data have not been determined specifically for this product. Information given is based on a knowledge of the components and the ecotoxicology of similar products.

Acute Toxicity : Poorly soluble mixture. May cause physical fouling of aquatic organisms. Expected to be practically non toxic: LL/EL/IL50 > 100 mg/l (to aquatic organisms) (LL/EL50 expressed as the nominal amount of product required to prepare aqueous test extract). Mineral oil is not expected to cause any chronic effects to aquatic organisms at concentrations less than 1 mg/l.

Mobility : Semi-solid under most environmental conditions. Floats on water. If it enters soil, it will adsorb to soil particles and will not be mobile.

Persistence/degradability : Expected to be not readily biodegradable. Major constituents are expected to be inherently biodegradable, but the product contains components that may persist in the environment.

Bioaccumulation : Contains components with the potential to bioaccumulate.

Other Adverse Effects : Product is a mixture of non-volatile components, which are not expected to be released to air in any significant quantities. Not expected to have ozone depletion potential, photochemical ozone creation potential or global warming potential.

13. DISPOSAL CONSIDERATIONS

Material Disposal : Recover or recycle if possible. It is the responsibility of the waste generator to determine the toxicity and physical properties of the material generated to determine the proper waste classification and disposal methods in compliance with applicable regulations. Do not dispose into the environment, in drains or in water courses.

Container Disposal : Dispose in accordance with prevailing regulations, preferably to a recognised collector or contractor. The competence of the collector or contractor should be established beforehand.

Local Legislation : Disposal should be in accordance with applicable regional, national, and local laws and regulations.

14. TRANSPORT INFORMATION

US Department of Transportation Classification (49CFR)

This material is not subject to DOT regulations under 49 CFR Parts 171-180.

IMDG
This material is not classified as dangerous under IMDG regulations.

IATA (Country variations may apply)
This material is not classified as dangerous under IATA regulations.

15. REGULATORY INFORMATION

The regulatory information is not intended to be comprehensive. Other regulations may apply to this material.

Federal Regulatory Status

Notification Status

EINECS	All components listed or polymer exempt.
TSCA	All components listed.
DSL	All components listed.

Comprehensive Environmental Release, Compensation & Liability Act (CERCLA)

Alvania Grease RL 3 ()	Reportable quantity: 100 lbs
Zinc naphthenate (12001-85-3)	

SARA Hazard Categories (311/312)
No SARA 311/312 Hazards.

SARA Toxic Release Inventory (TRI) (313)

Zinc naphthenate (12001-85-3)	1.00%

State Regulatory Status

California Safe Drinking Water and Toxic Enforcement Act (Proposition 65)

This material does not contain any chemicals known to the State of California to cause cancer, birth defects or other reproductive harm.

New Jersey Right-To-Know Chemical List

Zinc naphthenate (12001-85-3)	Listed.

16. OTHER INFORMATION

NFPA Rating (Health, Fire, Reactivity)	:	0, 1, 0
MSDS Version Number	:	7.0
MSDS Effective Date	:	07/07/2008
MSDS Revisions	:	A vertical bar (|) in the left margin indicates an amendment from the previous version.
MSDS Regulation	:	The content and format of this MSDS is in accordance with the OSHA Hazard Communication Standard, 29 CFR 1910.1200.
MSDS Distribution	:	The information in this document should be made available to all who may handle the product.
Disclaimer	:	The information contained herein is based on our current knowledge of the underlying data and is intended to describe the product for the purpose of health, safety and environmental requirements only. No warranty or guarantee is expressed or implied regarding the accuracy of these data or the results to be obtained from the use of the product.

[image]

Material Safety Data Sheet

SECTION 1 PRODUCT AND COMPANY IDENTIFICATION

Chevron Delo® Grease EP

Product Use: Grease

Product Number(s): CPS235208, CPS235209, CPS235211, CPS235212

Synonyms: Chevron Delo® Grease EP NLGI 0, Chevron Delo® Grease EP NLGI 00, Chevron Delo® Grease EP NLGI 1, Chevron Delo® Grease EP NLGI 2

Company Identification

Chevron Products Company

a division of Chevron U.S.A. Inc.

6001 Bollinger Canyon Rd.

San Ramon, CA 94583

United States of America

www.chevronlubricants.com

Transportation Emergency Response

CHEMTREC: (800) 424-9300 or (703) 527-3887

Health Emergency

Chevron Emergency Information Center: Located in the USA. International collect calls accepted. (800) 231-0623 or (510) 231-0623

Product Information

email : lubemsds@chevron.com

Product Information: (800) LUBE TEK

MSDS Requests: (800) 414-6737

SECTION 2 COMPOSITION/ INFORMATION ON INGREDIENTS

COMPONENTS	CAS NUMBER	AMOUNT
Highly refined mineral oil (C15 - C50)	Mixture	60 - 100 %weight
Zinc dialkyldithiophosphate	68649-42-3	1 - 5 %weight
Olefin Sulfide	Confidential	0.5 - 2 %weight

SECTION 3 HAZARDS IDENTIFICATION

****

EMERGENCY OVERVIEW

- HARMFUL TO AQUATIC ORGANISMS. MAY CAUSE LONG-TERM ADVERSE EFFECTS IN THE AQUATIC ENVIRONMENT

****

IMMEDIATE HEALTH EFFECTS

Eye: Not expected to cause prolonged or significant eye irritation.

Skin: Contact with the skin is not expected to cause prolonged or significant irritation. Contact with the skin is not expected to cause an allergic skin response. Not expected to be harmful to internal organs if absorbed through the skin. High-Pressure Equipment Information: Accidental high-velocity injection under the skin of materials of this type may result in serious injury. Seek medical attention at once should an accident like this occur. The initial wound at the injection site may not appear to be serious at first; but, if left untreated, could result in disfigurement or amputation of the affected part.

Ingestion: Not expected to be harmful if swallowed.

Inhalation: Not expected to be harmful if inhaled. Contains a petroleum-based mineral oil. May cause respiratory irritation or other pulmonary effects following prolonged or repeated inhalation of oil mist at airborne levels above the recommended mineral oil mist exposure limit. Symptoms of respiratory irritation may include coughing and difficulty breathing.

SECTION 4 FIRST AID MEASURES

Eye: No specific first aid measures are required. As a precaution, remove contact lenses, if worn, and flush eyes with water.

Skin: No specific first aid measures are required. As a precaution, remove clothing and shoes if contaminated. To remove the material from skin, apply a waterless hand cleaner, mineral oil, or petroleum jelly. Then wash with soap and water. Discard contaminated clothing and shoes or thoroughly clean before reuse.

Ingestion: No specific first aid measures are required. Do not induce vomiting. As a precaution, get medical advice.

Inhalation: No specific first aid measures are required. If exposed to excessive levels of material in the air, move the exposed person to fresh air. Get medical attention if coughing or respiratory discomfort occurs.

Note to Physicians: In an accident involving high-pressure equipment, this product may be injected under the skin. Such an accident may result in a small, sometimes bloodless, puncture wound. However, because of its driving force, material injected into a fingertip can be deposited into the palm of the hand. Within 24 hours, there is usually a great deal of swelling, discoloration, and intense throbbing pain. Immediate treatment at a surgical emergency center is recommended.

SECTION 5 FIRE FIGHTING MEASURES

FIRE CLASSIFICATION:

OSHA Classification (29 CFR 1910.1200): Not classified by OSHA as flammable or combustible.

NFPA RATINGS: Health: 0 Flammability: 1 Reactivity: 0

FLAMMABLE PROPERTIES:

Flashpoint: (Cleveland Open Cup) 200 °C (392 °F) Minimum

Autoignition: No data available

Flammability (Explosive) Limits (% by volume in air): Lower: Not Applicable Upper: Not Applicable

EXTINGUISHING MEDIA: Use water fog, foam, dry chemical or carbon dioxide (CO_2) to extinguish flames.

PROTECTION OF FIRE FIGHTERS:

Fire Fighting Instructions: This material will burn although it is not easily ignited. For fires involving this material, do not enter any enclosed or confined fire space without proper protective equipment, including self-contained breathing apparatus.

Combustion Products: Highly dependent on combustion conditions. A complex mixture of airborne solids, liquids, and gases including carbon monoxide, carbon dioxide, and unidentified organic compounds will be evolved when this material undergoes combustion.

SECTION 6 ACCIDENTAL RELEASE MEASURES

Protective Measures: Eliminate all sources of ignition in vicinity of spilled material.

Spill Management: Clean up spills immediately, observing precautions in Exposure Controls/Personal Protection section. Stop the source of the release if you can do it without risk. Contain release to prevent further contamination of soil, surface water or groundwater. Clean up spill as soon as possible, observing precautions in Exposure Controls/Personal Protection. Use appropriate techniques such as applying non-combustible absorbent materials or pumping. Where feasible and appropriate, remove contaminated soil. Place contaminated materials in disposable containers and dispose of in a manner consistent with applicable regulations.

Reporting: Report spills to local authorities and/or the U.S. Coast Guard's National Response Center at (800) 424-8802 as appropriate or required.

SECTION 7 HANDLING AND STORAGE

Precautionary Measures: Keep out of the reach of children.

General Handling Information: Avoid contaminating soil or releasing this material into sewage and drainage systems and bodies of water.

Static Hazard: Electrostatic charge may accumulate and create a hazardous condition when handling this material. To minimize this hazard, bonding and grounding may be necessary but may not, by themselves, be sufficient. Review all operations which have the potential of generating and accumulating an electrostatic charge and/or a flammable atmosphere (including tank and container filling, splash filling, tank cleaning, sampling, gauging, switch loading, filtering, mixing, agitation, and vacuum truck operations) and use appropriate mitigating procedures. For more information, refer to OSHA Standard 29 CFR 1910.106, 'Flammable and Combustible Liquids', National Fire Protection Association (NFPA 77, 'Recommended Practice on Static Electricity', and/or the American Petroleum Institute (API) Recommended Practice 2003, 'Protection Against Ignitions Arising Out of Static, Lightning, and Stray Currents'.

Container Warnings: Container is not designed to contain pressure. Do not use pressure to empty container or it may rupture with explosive force. Empty containers retain product residue (solid, liquid, and/or vapor) and can be dangerous. Do not pressurize, cut, weld, braze, solder, drill, grind, or expose such containers to heat, flame, sparks, static electricity, or other sources of ignition. They may explode and cause injury or death. Empty containers should be completely drained, properly closed, and promptly returned to a drum reconditioner or disposed of properly.

SECTION 8 EXPOSURE CONTROLS/PERSONAL PROTECTION

GENERAL CONSIDERATIONS:

Consider the potential hazards of this material (see Section 3), applicable exposure limits, job activities, and other substances in the work place when designing engineering controls and selecting personal protective equipment. If engineering controls or work practices are not adequate to prevent exposure to harmful levels of this material, the personal protective equipment listed below is recommended. The user should read and understand all instructions and limitations supplied with the equipment since protection is usually provided for a limited time or under certain circumstances.

ENGINEERING CONTROLS:

Use in a well-ventilated area.

PERSONAL PROTECTIVE EQUIPMENT

Eye/Face Protection: No special eye protection is normally required. Where splashing is possible, wear safety glasses with side shields as a good safety practice.

Skin Protection: No special protective clothing is normally required. Where splashing is possible, select protective clothing depending on operations conducted, physical requirements and other substances in the workplace. Suggested materials for protective gloves include: Neoprene, Nitrile Rubber, Silver Shield, Viton.

Respiratory Protection: No respiratory protection is normally required.

If user operations generate an oil mist, determine if airborne concentrations are below the occupational exposure limit for mineral oil mist. If not, wear an approved respirator that provides adequate protection from the measured concentrations of this material. For air-purifying respirators use a particulate cartridge.

Use a positive pressure air-supplying respirator in circumstances where air-purifying respirators may not provide adequate protection.

Occupational Exposure Limits:

Component	Agency	TWA	STEL	Ceiling	Notation
Highly refined mineral oil (C15 - C50)	ACGIH	5 mg/m3	10 mg/m3	--	--
Highly refined mineral oil (C15 - C50)	OSHA Z-1	5 mg/m3	--	--	--

Consult local authorities for appropriate values.

SECTION 9 PHYSICAL AND CHEMICAL PROPERTIES

Attention: the data below are typical values and do not constitute a specification.

Color: Blue

Physical State: Semi-solid

Odor: Petroleum odor

pH: Not Applicable

Vapor Pressure: <0.01 mmHg Maximum @ 100 °C (212 °F)

Vapor Density (Air = 1): >1 Minimum

Boiling Point: >260°C (500°F) Minimum

Solubility: Soluble in hydrocarbons; insoluble in water

Melting Point: 240°C (464°F) (Min)

Specific Gravity: 0.91 @ 15.6°C (60.1°F) / 15.6°C (60.1°F)

Viscosity: 15 mm2/s @ 100°C (100°F) Minimum

Evaporation Rate: No data available

SECTION 10 STABILITY AND REACTIVITY

Chemical Stability: This material is considered stable under normal ambient and anticipated storage and handling conditions of temperature and pressure.

Incompatibility With Other Materials: May react with strong acids or strong oxidizing agents, such as chlorates, nitrates, peroxides, etc.

Hazardous Decomposition Products: None known (None expected)

Hazardous Polymerization: Hazardous polymerization will not occur.

SECTION 11 TOXICOLOGICAL INFORMATION

IMMEDIATE HEALTH EFFECTS

Eye Irritation: The eye irritation hazard is based on evaluation of data for similar materials or product components.

Skin Irritation: The skin irritation hazard is based on evaluation of data for similar materials or product components.

Skin Sensitization: The skin sensitization hazard is based on evaluation of data for similar materials or product components.

Acute Dermal Toxicity: The acute dermal toxicity hazard is based on evaluation of data for similar materials or product components.

Acute Oral Toxicity: The acute oral toxicity hazard is based on evaluation of data for similar materials or product components.

Acute Inhalation Toxicity: The acute inhalation toxicity hazard is based on evaluation of data for similar materials or product components.

ADDITIONAL TOXICOLOGY INFORMATION:

This product contains petroleum base oils which may be refined by various processes including severe solvent extraction, severe hydrocracking, or severe hydrotreating. None of the oils requires a cancer warning under the OSHA Hazard Communication Standard (29 CFR 1910.1200). These oils have not been listed in the National Toxicology Program (NTP) Annual Report nor have they been classified by the International Agency for Research on Cancer (IARC) as; carcinogenic to humans (Group 1), probably carcinogenic to humans (Group 2A), or possibly carcinogenic to humans (Group 2B). These oils have not been classified by the American Conference of Governmental Industrial Hygienists (ACGIH) as: confirmed human carcinogen (A1), suspected human carcinogen (A2), or confirmed animal carcinogen with unknown relevance to humans (A3).

SECTION 12 ECOLOGICAL INFORMATION

ECOTOXICITY

This material is expected to be harmful to aquatic organisms and may cause long-term adverse effects in the aquatic environment. The product has not been tested. The statement has been derived from the properties of the individual components.

ENVIRONMENTAL FATE

This material is not expected to be readily biodegradable. The product has not been tested. The statement has been derived from the properties of the individual components.

SECTION 13 DISPOSAL CONSIDERATIONS

Use material for its intended purpose or recycle if possible. Oil collection services are available for used oil recycling or disposal. Place contaminated materials in containers and dispose of in a manner consistent with applicable regulations. Contact your sales representative or local environmental or health authorities for approved disposal or recycling methods.

SECTION 14 TRANSPORT INFORMATION

The description shown may not apply to all shipping situations. Consult 49CFR, or appropriate Dangerous Goods Regulations, for additional description requirements (e.g., technical name) and mode-specific or quantity-specific shipping requirements.

DOT Shipping Description: PETROLEUM LUBRICATING GREASE; NOT REGULATED AS A HAZARDOUS MATERIAL FOR TRANSPORTATION UNDER 49 CFR

Additional Information:NOT HAZARDOUS BY U.S. DOT. ADR/RID HAZARD CLASS NOT APPLICABLE.

IMO/IMDG Shipping Description: PETROLEUM LUBRICATING GREASE; NOT REGULATED AS DANGEROUS GOODS FOR TRANSPORT UNDER THE IMDG CODE

ICAO/IATA Shipping Description: PETROLEUM LUBRICATING GREASE; NOT REGULATED AS DANGEROUS GOODS FOR TRANSPORT UNDER ICAO

SECTION 15 REGULATORY INFORMATION

EPCRA 311/312 CATEGORIES: 1. Immediate (Acute) Health Effects: NO

2. Delayed (Chronic) Health Effects: NO

3. Fire Hazard: NO

4. Sudden Release of Pressure Hazard: NO

5. Reactivity Hazard: NO

REGULATORY LISTS SEARCHED:

01-1=IARC Group 1	03=EPCRA 313
01-2A=IARC Group 2A	04=CA Proposition 65
01-2B=IARC Group 2B	05=MA RTK
02=NTP Carcinogen	06=NJ RTK
	07=PA RTK

The following components of this material are found on the regulatory lists indicated.

Zinc dialkyldithiophosphate	03, 06

CHEMICAL INVENTORIES:

All components comply with the following chemical inventory requirements: AICS (Australia), DSL (Canada), EINECS (European Union), ENCS (Japan), IECSC (China), PICCS (Philippines), TSCA (United States).

One or more components does not comply with the following chemical inventory requirements: KECI (Korea).

NEW JERSEY RTK CLASSIFICATION:

Under the New Jersey Right-to-Know Act L. 1983 Chapter 315 N.J.S.A. 34:5A-1 et. seq., the product is to be identified as follows: PETROLEUM OIL (Grease)

WHMIS CLASSIFICATION:

This product is not considered a controlled product according to the criteria of the Canadian Controlled Products Regulations.

SECTION 16 OTHER INFORMATION

NFPA RATINGS: Health: 0 Flammability: 1 Reactivity: 0

HMIS RATINGS: Health: 1 Flammability: 1 Reactivity: 0

(0-Least, 1-Slight, 2-Moderate, 3-High, 4-Extreme, PPE:- Personal Protection Equipment Index recommendation, *- Chronic Effect Indicator). These values are obtained using the guidelines or published evaluations prepared by the National Fire Protection Association (NFPA) or the National Paint and Coating Association (for HMIS ratings).

LABEL RECOMMENDATION:

Label Category : GREASE 1 - GRS1

REVISION STATEMENT: This revision updates the following sections of this Material Safety Data Sheet: 15

Revision Date: JUNE 01, 2011

ABBREVIATIONS THAT MAY HAVE BEEN USED IN THIS DOCUMENT:

TLV - Threshold Limit Value	TWA - Time Weighted Average
STEL - Short-term Exposure Limit	PEL - Permissible Exposure Limit
	CAS - Chemical Abstract Service Number
ACGIH - American Conference of Government Industrial Hygienists	IMO/IMDG - International Maritime Dangerous Goods Code
API - American Petroleum Institute	MSDS - Material Safety Data Sheet
CVX - Chevron	NFPA - National Fire Protection Association (USA)
DOT - Department of Transportation (USA)	NTP - National Toxicology Program (USA)
IARC - International Agency for Research on Cancer	OSHA - Occupational Safety and Health Administration

Prepared according to the OSHA Hazard Communication Standard (29 CFR 1910.1200) and the ANSI MSDS Standard (Z400.1) by the Chevron Energy Technology Company, 100 Chevron Way, Richmond, California 94802.

The above information is based on the data of which we are aware and is believed to be correct as of the date hereof. Since this information may be applied under conditions beyond our control and with which we may be unfamiliar and since data made available subsequent to the date hereof may suggest modifications of the information, we do not assume any responsibility for the results of its use. This information is furnished upon condition that the person receiving it shall make his own determination of the suitability of the material for his particular purpose.

Material Safety Data Sheet

SECTION 1 PRODUCT AND COMPANY IDENTIFICATION

Chevron Rando® HD

Product Use: Hydraulic Oil

Product Number(s): CPS273277, CPS273278, CPS273279

Synonyms: Rando® HD ISO 32, Rando® HD ISO 46, Rando® HD ISO 68

Company Identification

Chevron Products Company

a division of Chevron U.S.A. Inc.

6001 Bollinger Canyon Rd.

San Ramon, CA 94583

United States of America

www.chevronlubricants.com

Transportation Emergency Response

CHEMTREC: (800) 424-9300 or (703) 527-3887

Health Emergency

Chevron Emergency Information Center: Located in the USA. International collect calls accepted. (800) 231-0623 or (510) 231-0623

Product Information

email : lubemsds@chevron.com

Product Information: (800) LUBE TEK

MSDS Requests: (800) 414-6737

SECTION 2 COMPOSITION/ INFORMATION ON INGREDIENTS

COMPONENTS	CAS NUMBER	AMOUNT
Highly refined mineral oil (C15 - C50)	Mixture	90 - 100 %weight

SECTION 3 HAZARDS IDENTIFICATION

IMMEDIATE HEALTH EFFECTS

Eye: Not expected to cause prolonged or significant eye irritation.

Skin: Contact with the skin is not expected to cause prolonged or significant irritation. Not expected to be harmful to internal organs if absorbed through the skin. High-Pressure Equipment Information: Accidental high-velocity injection under the skin of materials of this type may result in serious injury. Seek medical attention at once should an accident like this occur. The initial wound at the injection site may not appear to be serious at first; but, if left untreated, could result in disfigurement or amputation of the affected part.

Ingestion: Not expected to be harmful if swallowed.

Inhalation: Not expected to be harmful if inhaled. Contains a petroleum-based mineral oil. May cause respiratory irritation or other pulmonary effects following prolonged or repeated inhalation of oil mist at airborne levels above the recommended mineral oil mist exposure limit. Symptoms of respiratory irritation may include coughing and difficulty breathing.

SECTION 4 FIRST AID MEASURES

Eye: No specific first aid measures are required. As a precaution, remove contact lenses, if worn, and flush eyes with water.

Skin: No specific first aid measures are required. As a precaution, remove clothing and shoes if contaminated. To remove the material from skin, use soap and water. Discard contaminated clothing and shoes or thoroughly clean before reuse.

Ingestion: No specific first aid measures are required. Do not induce vomiting. As a precaution, get medical advice.

Inhalation: No specific first aid measures are required. If exposed to excessive levels of material in the air, move the exposed person to fresh air. Get medical attention if coughing or respiratory discomfort occurs.

Note to Physicians: In an accident involving high-pressure equipment, this product may be injected under the skin. Such an accident may result in a small, sometimes bloodless, puncture wound. However, because of its driving force, material injected into a fingertip can be deposited into the palm of the hand. Within 24 hours, there is usually a great deal of swelling, discoloration, and intense throbbing pain. Immediate treatment at a surgical emergency center is recommended.

SECTION 5 FIRE FIGHTING MEASURES

Leaks/ruptures in high pressure system using materials of this type can create a fire hazard when in the vicinity of ignition sources (eg. open flame, pilot lights, sparks, or electric arcs).

FIRE CLASSIFICATION:

OSHA Classification (29 CFR 1910.1200): Not classified by OSHA as flammable or combustible.

NFPA RATINGS: Health: 0 Flammability: 1 Reactivity: 0

FLAMMABLE PROPERTIES:

Flashpoint: (Cleveland Open Cup) 190 °C (374 °F) (Min)

Autoignition: No Data Available

Flammability (Explosive) Limits (% by volume in air): Lower: Not Applicable Upper: Not Applicable

EXTINGUISHING MEDIA: Use water fog, foam, dry chemical or carbon dioxide (CO_2) to extinguish flames.

PROTECTION OF FIRE FIGHTERS:

Fire Fighting Instructions: This material will burn although it is not easily ignited. For fires involving this material, do not enter any enclosed or confined fire space without proper protective equipment, including self-contained breathing apparatus.

Combustion Products: Highly dependent on combustion conditions. A complex mixture of airborne solids, liquids, and gases including carbon monoxide, carbon dioxide, and unidentified organic compounds will be evolved when this material undergoes combustion.

SECTION 6 ACCIDENTAL RELEASE MEASURES

Protective Measures: Eliminate all sources of ignition in vicinity of spilled material.

Spill Management: Stop the source of the release if you can do it without risk. Contain release to prevent further contamination of soil, surface water or groundwater. Clean up spill as soon as possible, observing precautions in Exposure Controls/Personal Protection. Use appropriate techniques such as applying non-combustible absorbent materials or pumping. Where feasible and appropriate, remove contaminated soil. Place contaminated materials in disposable containers and dispose of in a manner consistent with applicable regulations.

Reporting: Report spills to local authorities and/or the U.S. Coast Guard's National Response Center at (800) 424-8802 as appropriate or required.

SECTION 7 HANDLING AND STORAGE

Precautionary Measures: DO NOT USE IN HIGH PRESSURE SYSTEMS in the vicinity of flames, sparks and hot surfaces. Use only in well ventilated areas. Keep container closed.

General Handling Information: Avoid contaminating soil or releasing this material into sewage and drainage systems and bodies of water.

Static Hazard: Electrostatic charge may accumulate and create a hazardous condition when handling this material. To minimize this hazard, bonding and grounding may be necessary but may not, by themselves, be sufficient. Review all operations which have the potential of generating and accumulating an electrostatic charge and/or a flammable atmosphere (including tank and container filling, splash filling, tank cleaning, sampling, gauging, switch loading, filtering, mixing, agitation, and vacuum truck operations) and use appropriate mitigating procedures. For more information, refer to OSHA Standard 29 CFR 1910.106, 'Flammable and Combustible Liquids', National Fire Protection Association (NFPA 77, 'Recommended Practice on Static Electricity', and/or the American Petroleum Institute (API) Recommended Practice 2003, 'Protection Against Ignitions Arising Out of Static, Lightning, and Stray Currents'.

Container Warnings: Container is not designed to contain pressure. Do not use pressure to empty container or it may rupture with explosive force. Empty containers retain product residue (solid, liquid, and/or vapor) and can be dangerous. Do not pressurize, cut, weld, braze, solder, drill, grind, or expose such containers to heat, flame, sparks, static electricity, or other sources of ignition. They may explode and cause injury or death. Empty containers should be completely drained, properly closed, and promptly returned to a drum reconditioner or disposed of properly.

SECTION 8 EXPOSURE CONTROLS/PERSONAL PROTECTION

GENERAL CONSIDERATIONS:

Consider the potential hazards of this material (see Section 3), applicable exposure limits, job activities, and other substances in the work place when designing engineering controls and selecting personal protective equipment. If engineering controls or work practices are not adequate to prevent exposure to harmful levels of this material, the personal protective equipment listed below is recommended. The user should read and understand all instructions and limitations supplied with the equipment since protection is usually provided for a limited time or under certain circumstances.

ENGINEERING CONTROLS:

Use in a well-ventilated area.

PERSONAL PROTECTIVE EQUIPMENT

Eye/Face Protection: No special eye protection is normally required. Where splashing is possible, wear safety glasses with side shields as a good safety practice.

Skin Protection: No special protective clothing is normally required. Where splashing is possible, select protective clothing depending on operations conducted, physical requirements and other substances in the workplace. Suggested materials for protective gloves include: 4H (PE/EVAL), Nitrile Rubber, Silver Shield, Viton.

Respiratory Protection: No respiratory protection is normally required.

If user operations generate an oil mist, determine if airborne concentrations are below the occupational exposure limit for mineral oil mist. If not, wear an approved respirator that provides adequate protection from the measured concentrations of this material. For air-purifying respirators use a particulate cartridge.

Use a positive pressure air-supplying respirator in circumstances where air-purifying respirators may not provide adequate protection.

Occupational Exposure Limits:

Component	Agency	TWA	STEL	Ceiling	Notation
Highly refined mineral oil (C15 - C50)	ACGIH	5 mg/m3	10 mg/m3	--	--
Highly refined mineral oil (C15 - C50)	OSHA Z-1	5 mg/m3	--	--	--

SECTION 9 PHYSICAL AND CHEMICAL PROPERTIES

Attention: the data below are typical values and do not constitute a specification.

Color: Yellow

Physical State: Liquid

Odor: Petroleum odor

pH: Not Applicable

Vapor Pressure: <0.01 mmHg @ 37.8 °C (100 °F)

Vapor Density (Air = 1): >1

Boiling Point: 315°C (599°F)

Solubility: Soluble in hydrocarbon solvents; insoluble in water.

Freezing Point: Not Applicable

Specific Gravity: 0.86 - 0.9 @ 15.6°C (60.1°F) / 15.6°C (60.1°F)

Density: 0.86 kg/l - 0.87 kg/l @ 15°C (59°F)

Volatile Organic

Compounds (VOC) : <2.1 %weight

Viscosity: 32 cSt @ 40°C (104°F) (Min)

SECTION 10 STABILITY AND REACTIVITY

Chemical Stability: This material is considered stable under normal ambient and anticipated storage and handling conditions of temperature and pressure.

Incompatibility With Other Materials: May react with strong acids or strong oxidizing agents, such as chlorates, nitrates, peroxides, etc.

Hazardous Decomposition Products: None known (None expected)

Hazardous Polymerization: Hazardous polymerization will not occur.

SECTION 11 TOXICOLOGICAL INFORMATION

IMMEDIATE HEALTH EFFECTS

Eye Irritation: The eye irritation hazard is based on evaluation of data for similar materials or product components.

Skin Irritation: The skin irritation hazard is based on evaluation of data for similar materials or product components.

Skin Sensitization: No product toxicology data available.

Acute Dermal Toxicity: The acute dermal toxicity hazard is based on evaluation of data for similar materials or product components.

Acute Oral Toxicity: The acute oral toxicity hazard is based on evaluation of data for similar materials or product components.

Acute Inhalation Toxicity: The acute inhalation toxicity hazard is based on evaluation of data for similar materials or product components.

ADDITIONAL TOXICOLOGY INFORMATION:

This product contains petroleum base oils which may be refined by various processes including severe solvent extraction, severe hydrocracking, or severe hydrotreating. None of the oils requires a cancer warning under the OSHA Hazard Communication Standard (29 CFR 1910.1200). These oils have not been listed in the National Toxicology Program (NTP) Annual Report nor have they been classified by the International Agency for Research on Cancer (IARC) as; carcinogenic to humans (Group 1), probably carcinogenic to humans (Group 2A), or possibly carcinogenic to humans (Group 2B). These oils have not been classified by the American Conference of Governmental Industrial Hygienists (ACGIH) as: confirmed human carcinogen (A1), suspected human carcinogen (A2), or confirmed animal carcinogen with unknown relevance to humans (A3).

SECTION 12 ECOLOGICAL INFORMATION

ECOTOXICITY

48 hour(s) EC50: >1000 mg/l (Daphnia magna)

96 hour(s) LC50: >1000 mg/l (Oncorhynchus mykiss)

This material is not expected to be harmful to aquatic organisms.

ENVIRONMENTAL FATE

Ready Biodegradability: This material is not expected to be readily biodegradable. The biodegradability of this material is based on an evaluation of data for the components or a similar material.

SECTION 13 DISPOSAL CONSIDERATIONS

Use material for its intended purpose or recycle if possible. Oil collection services are available for used oil recycling or disposal. Place contaminated materials in containers and dispose of in a manner consistent with applicable regulations. Contact your sales representative or local environmental or health authorities for approved disposal or recycling methods.

SECTION 14 TRANSPORT INFORMATION

The description shown may not apply to all shipping situations. Consult 49CFR, or appropriate Dangerous Goods

Regulations, for additional description requirements (e.g., technical name) and mode-specific or quantity-specific shipping requirements.

DOT Shipping Description: PETROLEUM LUBRICATING OIL, NOT REGULATED AS A HAZARDOUS MATERIAL FOR TRANSPORTATION UNDER 49 CFR

Additional Information:NOT HAZARDOUS BY U.S. DOT. ADR/RID HAZARD CLASS NOT APPLICABLE.

IMO/IMDG Shipping Description: PETROLEUM LUBRICATING OIL; MAY BE REGULATED AS DANGEROUS GOODS FOR TRANSPORT UNDER THE IMDG CODE

ICAO/IATA Shipping Description: PETROLEUM LUBRICATING OIL; NOT REGULATED AS DANGEROUS GOODS FOR TRANSPORT UNDER ICAO TI OR IATA DGR

SECTION 15 REGULATORY INFORMATION

EPCRA 311/312 CATEGORIES: 1. Immediate (Acute) Health Effects: NO

2. Delayed (Chronic) Health Effects: NO

3. Fire Hazard: NO

4. Sudden Release of Pressure Hazard: NO

5. Reactivity Hazard: NO

REGULATORY LISTS SEARCHED:

01-1=IARC Group 1	03=EPCRA 313
01-2A=IARC Group 2A	04=CA Proposition 65
01-2B=IARC Group 2B	05=MA RTK
02=NTP Carcinogen	06=NJ RTK
	07=PA RTK

No components of this material were found on the regulatory lists above.

CHEMICAL INVENTORIES:

All components comply with the following chemical inventory requirements: AICS (Australia), DSL (Canada), ENCS (Japan), IECSC (China), KECI (Korea), PICCS (Philippines), TSCA (United States).

One or more components is listed on ELINCS (European Union). Secondary notification by the importer may be required. All other components are listed or exempted from listing on EINECS.

NEW JERSEY RTK CLASSIFICATION:

Under the New Jersey Right-to-Know Act L. 1983 Chapter 315 N.J.S.A. 34:5A-1 et. seq., the product is to be identified as follows: PETROLEUM OIL (Hydraulic oil)

WHMIS CLASSIFICATION:

This product is not considered a controlled product according to the criteria of the Canadian Controlled Products Regulations.

SECTION 16 OTHER INFORMATION

NFPA RATINGS: Health: 0 Flammability: 1 Reactivity: 0

HMIS RATINGS: Health: 1 Flammability: 1 Reactivity: 0

(0-Least, 1-Slight, 2-Moderate, 3-High, 4-Extreme, PPE:- Personal Protection Equipment Index recommendation, *- Chronic Effect Indicator). These values are obtained using the guidelines or published evaluations prepared by the National Fire Protection Association (NFPA) or the National Paint and Coating Association (for HMIS ratings).

LABEL RECOMMENDATION:

Label Category : INDUSTRIAL OIL 1 - IND1

REVISION STATEMENT: This revision updates the following sections of this Material Safety Data Sheet: 12,14,15,16

Revision Date: February 24, 2009

ABBREVIATIONS THAT MAY HAVE BEEN USED IN THIS DOCUMENT:

TLV - Threshold Limit Value	TWA - Time Weighted Average
STEL - Short-term Exposure Limit	PEL - Permissible Exposure Limit
	CAS - Chemical Abstract Service Number
ACGIH - American Conference of Government Industrial Hygienists	IMO/IMDG - International Maritime Dangerous Goods Code
API - American Petroleum Institute	MSDS - Material Safety Data Sheet
CVX - Chevron	NFPA - National Fire Protection Association (USA)
DOT - Department of Transportation (USA)	NTP - National Toxicology Program (USA)
IARC - International Agency for Research on Cancer	OSHA - Occupational Safety and Health Administration

Prepared according to the OSHA Hazard Communication Standard (29 CFR 1910.1200) and the ANSI MSDS Standard (Z400.1) by the Chevron Energy Technology Company, 100 Chevron Way, Richmond, California 94802.

The above information is based on the data of which we are aware and is believed to be correct as of the date hereof. Since this information may be applied under conditions beyond our control and with which we may be unfamiliar and since data made available subsequent to the date hereof may suggest modifications of the information, we do not assume any responsibility for the results of its use. This information is furnished upon condition that the person receiving it shall make his own determination of the suitability of the material for his particular purpose.

DOW CORNING(R) 4 ELECTRICAL INSULATING COMPOUND

1. PRODUCT AND COMPANY IDENTIFICATION

Dow Corning Corporation
South Saginaw Road
Midland, Michigan 48686

24 Hour Emergency Telephone: (989) 496-5900
Customer Service: (989) 496-6000
Product Disposal Information: (989) 496-6315
CHEMTREC: (800) 424-9300

MSDS No.: 01903128 Revision Date: 2009/01/06

Generic Description: Inorganic compound
Physical Form: Grease
Color: Translucent white
Odor: Some odor

NFPA Profile: Health 0 Flammability 1 Instability/Reactivity 0

Note: NFPA = National Fire Protection Association

2. HAZARDS IDENTIFICATION

POTENTIAL HEALTH EFFECTS

Acute Effects

Eye: Direct contact may cause temporary redness and discomfort.

Skin: No significant irritation expected from a single short-term exposure.

Inhalation: No significant effects expected from a single short-term exposure.

Oral: Low ingestion hazard in normal use.

Prolonged/Repeated Exposure Effects

Skin: No known applicable information.

Inhalation: No known applicable information.

Oral: No known applicable information.

Signs and Symptoms of Overexposure

No known applicable information.

Medical Conditions Aggravated by Exposure

No known applicable information.

The above listed potential effects of overexposure are based on actual data, results of studies performed upon similar compositions,

component data and/or expert review of the product. Please refer to Section 11 for the detailed toxicology information.

3. COMPOSITION/INFORMATION ON INGREDIENTS

None present. This is not a hazardous material as defined in the OSHA Hazard Communication Standard.

4. FIRST AID MEASURES

Eye:	Immediately flush with water.
Skin:	No first aid should be needed.
Inhalation:	No first aid should be needed.
Oral:	No first aid should be needed.
Notes to Physician:	Treat according to person's condition and specifics of exposure.

5. FIRE FIGHTING MEASURES

Flash Point:	212 °F / 100 °C (Closed Cup)
Autoignition Temperature:	Not determined.
Flammability Limits in Air:	Not determined.
Extinguishing Media:	On large fires use dry chemical, foam or water spray. On small fires use carbon dioxide (CO2), dry chemical or water spray. Water can be used to cool fire exposed containers.
Fire Fighting Measures:	Self-contained breathing apparatus and protective clothing should be worn in fighting large fires involving chemicals. Determine the need to evacuate or isolate the area according to your local emergency plan. Use water spray to keep fire exposed containers cool.
Unusual Fire Hazards:	None.

6. ACCIDENTAL RELEASE MEASURES

Containment/Clean up: Observe all personal protection equipment recommendations described in Sections 5 and 8. Wipe up or scrape up and contain for salvage or disposal. Clean area as appropriate since spilled materials, even in small quantities, may present a slip hazard. Final cleaning may require use of steam, solvents or detergents. Local, state and federal laws and regulations may apply to releases and disposal of this material, as well as those materials and items employed in the cleanup of releases. You will need to determine which federal, state and local laws and regulations are applicable. Sections 13 and 15 of this MSDS provide information regarding certain federal and state requirements.

Note: See section 8 for Personal Protective Equipment for Spills. Call (989) 496-5900, if additional information is required.

7. HANDLING AND STORAGE

Use with adequate ventilation. Avoid eye contact.

Use reasonable care and store away from oxidizing materials.

8. EXPOSURE CONTROLS / PERSONAL PROTECTION

Component Exposure Limits

There are no components with workplace exposure limits.

Engineering Controls

Local Ventilation: None should be needed.
General Ventilation: Recommended.

Personal Protective Equipment for Routine Handling

Eyes: Use proper protection - safety glasses as a minimum.

Skin: Washing at mealtime and end of shift is adequate.

Suitable Gloves: Handle in accordance with good industrial hygiene and safety practices.

Inhalation: No respiratory protection should be needed.

Suitable Respirator: None should be needed.

Personal Protective Equipment for Spills

Eyes: Use proper protection - safety glasses as a minimum.

Skin:	Washing at mealtime and end of shift is adequate.
Inhalation/Suitable Respirator:	No respiratory protection should be needed.
Precautionary Measures:	Avoid eye contact. Use reasonable care.

Note: These precautions are for room temperature handling. Use at elevated temperature or aerosol/spray applications may require added precautions.

9. PHYSICAL AND CHEMICAL PROPERTIES

Physical Form:	Grease
Color:	Translucent white
Odor:	Some odor
Specific Gravity @ 25°C:	> 1
Viscosity:	Not determined.
Freezing/Melting Point:	Not determined.
Boiling Point:	Not determined.
Vapor Pressure @ 25°C:	Not determined.
Vapor Density:	Not determined.
Solubility in Water:	Not determined.
pH:	Not determined.
Volatile Content:	Not determined.
Flash Point:	212 °F / 100 °C (Closed Cup)
Autoignition Temperature:	Not determined.
Flammability Limits in Air:	Not determined.

Note: The above information is not intended for use in preparing product specifications. Contact Dow Corning before writing specifications.

10. STABILITY AND REACTIVITY

Chemical Stability:	Stable.
Hazardous Polymerization:	Hazardous polymerization will not occur.
Conditions to Avoid:	None.
Materials to Avoid:	Oxidizing material can cause a reaction.

Hazardous Decomposition Products

Thermal breakdown of this product during fire or very high heat conditions may evolve the following decomposition products: Carbon oxides and traces of incompletely burned carbon compounds. Silicon dioxide. Formaldehyde.

11. TOXICOLOGICAL INFORMATION

Special Hazard Information on Components

No known applicable information.

12. ECOLOGICAL INFORMATION

Environmental Fate and Distribution

Complete information is not yet available.

Environmental Effects

Complete information is not yet available.

Fate and Effects in Waste Water Treatment Plants

Complete information is not yet available.

Ecotoxicity Classification Criteria

Hazard Parameters (LC50 or EC50)	High	Medium	Low
Acute Aquatic Toxicity (mg/L)	<=1	>1 and <=100	>100
Acute Terrestrial Toxicity	<=100	>100 and <= 2000	>2000

This table is adapted from "Environmental Toxicology and Risk Assessment", ASTM STP 1179, p.34, 1993.

This table can be used to classify the ecotoxicity of this product when ecotoxicity data is listed above. Please read the other information presented in the section concerning the overall ecological safety of this material.

13. DISPOSAL CONSIDERATIONS

RCRA Hazard Class (40 CFR 261)

When a decision is made to discard this material, as received, is it classified as a hazardous waste? No

State or local laws may impose additional regulatory requirements regarding disposal.Call (989) 496-6315, if additional information is required.

14. TRANSPORT INFORMATION

DOT Road Shipment Information (49 CFR 172.101)

Not subject to DOT.

Ocean Shipment (IMDG)

Not subject to IMDG code.

Air Shipment (IATA)

Not subject to IATA regulations.

Call Dow Corning Transportation, (989) 496-8577, if additional information is required.

15. REGULATORY INFORMATION

Contents of this MSDS comply with the OSHA Hazard Communication Standard 29 CFR 1910.1200.

TSCA Status: All chemical substances in this material are included on or exempted from listing on the TSCA Inventory of Chemical Substances.

EPA SARA Title III Chemical Listings

Section 302 Extremely Hazardous Substances (40 CFR 355):
None.

Section 304 CERCLA Hazardous Substances (40 CFR 302):
None.

Section 311/312 Hazard Class (40 CFR 370):

Acute:	No
Chronic:	No
Fire:	No
Pressure:	No
Reactive:	No

Section 313 Toxic Chemicals (40 CFR 372):
None present or none present in regulated quantities.

Note: Chemicals are listed under the 313 Toxic Chemicals section only if they meet or exceed a reporting threshold.

Supplemental State Compliance Information

California

Warning: This product contains the following chemical(s) listed by the State of California under the Safe Drinking Water and Toxic Enforcement Act of 1986 (Proposition 65) as being known to cause cancer, birth defects or other reproductive harm.

None known.

Massachusetts

CAS Number	Wt %	Component Name

7631-86-9	7.0 - 13.0	Silica, amorphous

New Jersey

CAS Number	Wt %	Component Name
68037-74-1	> 60.0	Dimethyl, methyl silicone resin
7631-86-9	7.0 - 13.0	Silica, amorphous
70131-67-8	5.0 - 10.0	Dimethyl siloxane, hydroxy-terminated

Pennsylvania

CAS Number	Wt %	Component Name
68037-74-1	> 60.0	Dimethyl, methyl silicone resin
7631-86-9	7.0 - 13.0	Silica, amorphous
70131-67-8	5.0 - 10.0	Dimethyl siloxane, hydroxy-terminated

16. OTHER INFORMATION

Prepared by: Dow Corning Corporation

These data are offered in good faith as typical values and not as product specifications. No warranty, either expressed or implied, is hereby made. The recommended industrial hygiene and safe handling procedures are believed to be generally applicable. However, each user should review these recommendations in the specific context of the intended use and determine whether they are appropriate.

(R) indicates Registered Trademark

MATERIAL SAFETY DATA SHEET

SECTION 1 IDENTIFICATION OF THE SUBSTANCE/PREPARATION AND OF THE COMPANY/UNDERTAKING

LUBRIPLATE® Lubricants Co.
129 Lockwood St.
Newark, NJ 07105

Emergency Telephone Number:
1-800-255-3924-CHEM-TEL (24 hour)
Telephone Number for information:
1-973-589-9150

SUBSTANCE: LUBRIPLATE Gear Shield Extra Heavy (Aerosol) **MSDS No. - 0892150152063**

TRADE NAMES/SYNONYMS:

PRODUCT USE: Petroleum lubricating grease

CREATION DATE: 11/05/2007
REVISION DATE: 01/21/2010

SECTION 2 COMPOSITION/INFORMATION ON INGREDIENTS

COMPONENT: Heptane
CAS NUMBER: 142-82-5
EC NUMBER (EINECS): 205-563-8
PERCENTAGE: 20-25

COMPONENT: Liquefied petroleum gas
CAS NUMBER: 68476-86-8
EC NUMBER (EINECS): 270-704-2
PERCENTAGE: 15-20

COMPONENT: Light petroleum distillates
CAS NUMBER: 64742-47-8
EC NUMBER (EINECS): 265-149-8
PERCENTAGE: 15-20

COMPONENT: Heavy hydrotreated naphthenic distillates (petroleum)
CAS NUMBER: 64742-52-5
EC NUMBER (EINECS): 265-155-0
PERCENTAGE: 10-15

COMPONENT: Residual oils (petroleum), solvent dewaxed
CAS NUMBER: 64742-62-7
EC NUMBER (EINECS): 265-166-0
PERCENTAGE: 5-10

COMPONENT: Petroleum asphalt
CAS NUMBER: 8052-42-4

EC NUMBER (EINECS): 232-490-9
PERCENTAGE: 5-10

COMPONENT: Petroleum hydrocarbon
CAS NUMBER: NA
EC NUMBER (EINECS): NA
PERCENTAGE: 2-5

COMPONENT: Zinc oxide
CAS NUMBER: 1314-13-2
EC NUMBER (EINECS): 215-222-5
PERCENTAGE: 2-5

COMPONENT: 12 hydroxystearic acid
CAS NUMBER: 106-14-9
EC NUMBER (EINECS): 203-366-1
PERCENTAGE: 2-5

COMPONENT: Carbon black
CAS NUMBER: 1333-86-4
EC NUMBER (EINECS): 215-609-9
PERCENTAGE: 0-2

COMPONENT: Inedible animal grease
CAS NUMBER: 68153-81-1
EC NUMBER (EINECS): 268-896-8
PERCENTAGE: 0-1

COMPONENT: Lithium hydroxide monohydrate
CAS NUMBER: 1310-66-3
EC NUMBER (EINECS): not assigned
PERCENTAGE: 0-1

COMPONENT: Petroleum hydrocarbon
CAS NUMBER: 64742-58-1
EC NUMBER (EINECS): 265-161-3
PERCENTAGE: 0-1

NOTE: The IP 346 value of the mineral oil is less than 3%

SECTION 3 HAZARDS IDENTIFICATION

POTENTIAL HEALTH EFFECTS:
INHALATION:
SHORT TERM EXPOSURE: Irritation
LONG TERM EXPOSURE: Lung damage
SKIN CONTACT:
SHORT TERM EXPOSURE: Irritation

LONG TERM EXPOSURE: Irritation, skin disorders
EYE CONTACT:
SHORT TERM EXPOSURE: Irritation
LONG TERM EXPOSURE: No information available
INGESTION:
SHORT TERM EXPOSURE: Diarrhea, difficulty breathing
LONG TERM EXPOSURE: no information on significant adverse effects

Effects of overexposure: Inhalation is the most likely method of exposure. Minimal effects are expected at levels below the TLV of components. Dizziness, drowsiness, coughing, nasal or throat irritations at higher levels. LPG may act as a simple asphyxiant without other significant physiologic effects if the oxygen content is low. It is reported that overexposure can cause liver abnormalities, kidney, lung and spleen damage in test animals.

HAZARDOUS MATERIAL IDENTIFICATION SYSTEM (HMIS):
Health – 1
Flammability – 4
Reactivity – 0

Not a Controlled Product under (WHMIS) – Canada **Special Protection: See Section 8**

SECTION 4 FIRST AID MEASURES

INHALATION: Remove to fresh air. If breathing has stopped, administer artificial respiration. Get medical help immediately.

SKIN CONTACT: Remove any contaminated clothing and wash with soap and warm water.

EYE CONTACT: Flush with clear water for 15 minutes or until irritation subsides. If irritation persists, consult a physician.

INGESTION: If ingested, call a physician immediately. Do not induce vomiting.

SECTION 5 FIRE FIGHTING MEASURES

FIRE AND EXPLOSION HAZARDS: Fire hazard

EXTINGUISHING MEDIA: Foam, Dry Chemical, Carbon Dioxide or Water Spray (Fog)

SPECIAL FIRE FIGHTING PROCEDURES: Keep containers cool. Use air-supplied breathing equipment for enclosed or confined spaces. Use shielding to protect personnel against bursting containers.

UNUSUAL FIRE AND EXPLOSION HAZARDS: Do not spray near open flame. At elevated temperatures (over 54 C), aerosol containers may vent, burst, or rupture.

SECTION 6 ACCIDENTAL RELEASE MEASURES

OCCUPATIONAL RELEASE: Remove sources of ignition, ventilate area. Use appropriate safety equipment to enter area. Allow time for vapors to be below their TLV. Add oil absorbent and clean area. Keep petroleum products our of sewers and water courses.

SECTION 7 HANDLING AND STORAGE

STORAGE: Store in cool, dry area out of direct sunlight. Do not puncture or incinerate, or heat full or empty containers above 54 C.

SECTION 8 EXPOSURE CONTROLS/PERSONAL PROTECTION

EXPOSURE LIMITS:
OIL MIST IN AIR (Not Encountered in Normal Usage):
5 mg/m^3 UK OES TWA
10mg/m^3 UK OES STEL

HEPTANE:
400 ppm PEL

LIQUEFIED PETROLEUM GAS:
1,800 ppm PEL

LIGHT PETROLEUM DISTILLATES:
500 ppm PEL

VENTILATION: Provide local exhaust ventilation system. Ensure compliance with applicable exposure limits.

EYE PROTECTION: Wear splash resistant safety goggles. Provide an emergency eye wash fountain and quick drench shower in the immediate work area.

CLOTHING: Wear appropriate chemical resistant clothing.

GLOVES: Wear appropriate chemical resistant (nitrile) gloves.

RESPIRATOR: Need approved organic vapor mask if TLV is exceeded.

SECTION 9 PHYSICAL AND CHEMICAL PROPERTIES

PHYSICAL STATE: aerosol
APPEARANCE: smooth
COLOUR: black/gray
PHYSICAL FORM: aerosol mist

ODOR: solvent odor
BOILING POINT: not available
FREEZING POINT: not available
FLASH POINT: propellant - <-18 C
LOWER FLAMMABLE LIMIT: not determined
UPPER FLAMMABLE LIMIT: not determined
AUTO IGNITION: not available
VAPOUR PRESSURE: aerosol at 54 C - 115 psig
VAPOR DENSITY (air=1): >1
SPECIFIC GRAVITY (water=1): 0.98 (of product)
DENSITY: not available
WATER SOLUBILITY: insoluble
pH: not available
VOLATILITY: not available
ODOR THRESHOLD: not available
EVAPORATION RATE (Butyl acetate = 1): faster
VISCOSITY: not available
COEFFICIENT OF WATER/OIL DISTRIBUTION: not available

SECTION 10 STABILITY AND REACTIVITY

REACTIVITY: Stable at normal temperatures and pressures

CONDITIONS TO AVOID: Avoid spraying into open flame or onto red-hot surfaces.

INCOMPATIBLES: Strong oxidants

HAZARDOUS DECOMPOSITION:
Thermal decomposition products or combustion: may form carbon monoxide

POLYMERISATION: Will not polymerise.

SECTION 11 TOXICOLOGICAL INFORMATION

Heptane:
TOXICITY DATA:
No data available

Liquefied petroleum gas:
TOXICITY DATA:
No data available

Light petroleum distillates:
TOXICITY DATA:
No data available

Heavy hydrotreated naphthenic distillates (petroleum):
TOXICITY DATA:
Low order of dermal and oral toxicity

Petroleum hydrocarbons:
TOXICITY DATA:
Greater than 2,000 mg/kg oral-rat LD50

Petroleum asphalt:
TOXICITY DATA:
No data available

Residual oils (petroleum), solvent dewaxed:
TOXICITY DATA:
No data available

Zinc oxide:
TOXICITY DATA:
No data available

12 hydroxystearic acid:
TOXICITY DATA:
Greater than 5 g/kg oral-rat LD50

Carbon black:
TOXICITY DATA:
Greater than 8,000 mg/kg oral-rat LD50

Inedible animal grease:
TOXICITY DATA:
No data available

Lithium hydroxide monohydrate:
TOXICITY DATA:
210 mg/kg oral-rat LD50

Petroleum hydrocarbon:
TOXICITY DATA:
No data available

SECTION 12 ECOLOGICAL INFORMATION

Not available

SECTION 13 DISPOSAL CONSIDERATIONS

Dispose in accordance with all applicable regulations

SECTION 14 TRANSPORT INFORMATION

LAND TRANSPORT ADR: No classification assigned.

LAND TRANSPORT RID: No classification assigned.

AIR TRANSPORT IATA: ID 8000, CONSUMER COMMODITY, CLASS 9, PACKING INSTRUCTIONS - 910

AIR TRANSPORT ICAO: ID 8000, CONSUMER COMMODITY, CLASS 9, PACKING INSTRUCTIONS - 910

MARITIME TRANSPORT IMDG: UN 1950, AEROSOLS (LTD. QTY.), CLASS 2.1, EmS NO. F-D, S-U, ERG NO. 126

SECTION 15 REGULATORY INFORMATION

EUROPEAN REGULATIONS:
EC CLASSIFICATION (CALCULATED): N
Risk Phrases: R51/53 Toxic to aquatic organisms, may cause long-term adverse effects in the aquatic environment.

SARA/TITLE III, Section 313 Status – Zinc Compounds <3%

SECTION 16 OTHER INFORMATION

The above information is furnished without warranty, expressed or implied, except that it is accurate to the best knowledge of LUBRIPLATE Lubricants Company. The data on these sheets relates only to the specific material designated herein. LUBRIPLATE Lubricants Company assumes no legal responsibility for use or reliance upon this data.

MARINE-KOPR™
COPPER ANTI-SEIZE

DESCRIPTION

MARINE-KOPR™ Copper Anti-Seize Compound is manufactured to exacting marine specifications and contains micro-sized copper flake and graphite in a highly water resistant aluminum complex base grease. **MARINE-KOPR** is fortified with anti-oxidants and corrosion inhibitors to ensure extra protection in extreme marine conditions.

MARINE-KOPR is recommended on all marine threaded and flanged connections to prevent galling, seizure and heat welding, and to reduce torque requirements. Prevents rust and corrosion over broad temperature ranges.

- Lead Free
- Service rating: -65°F (-54°C) to 1800°F (982°C)
- Prevents rust/corrosion
- Lowers friction
- Will not run, drip, settle
- Color - Bronze

APPLICATIONS

Threaded Fasteners
Flange Faces
Gaskets
Flanged Connections
Keyways

PRODUCT CHARACTERISTICS

Color	Bronze
Penetration (ASTM D-217)	285 - 315
Density (lb/gal)	8.9
Specific Gravity	1.07
Flash Point (ASTM D-92)	>430°F (221°C)
Shell 4-Ball (ASTM D-2596)	
Weld Point, kg	315
Load Wear Index	54.24
Wear Scar (ASTM D-2266)	1.025
Dropping Point (ASTM D-566)	450°F (232°C)
Thickener Type	Aluminum Complex
Base Oil Type	Petroleum
Copper Strip Corrosion (ASTM D-4048)	1B
Water Spray Off Resistance (ASTM D-4049)	<40%
VOC (EPA 624)	None

Shelf Life: Minimum two years from manufacture date.

PACKAGING

Code No.	Container Size	Container
09702	½ lb.	Brush Top can
09704	1 lb.	Brush Top can

LIMITED WARRANTY

Jet-Lube, Inc. makes the Limited Express Warranty that at the date of delivery, this product shall be free from defects in Jet-Lube, Inc. materials and workmanship.

This Limited Express Warranty is expressly in lieu of any other express or implied warranties, including any implied warranty of merchantability or fitness for a particular purpose, and of any other obligation on the part of Jet-Lube, Inc.

The sole remedy for breach of the Limited Express Warranty shall be the refund of the purchase price. All other liability is negated and disclaimed, and Jet-Lube, Inc. shall not be liable for incidental or consequential damages.

CORPORATE LOCATIONS

Houston, Texas–World Headquarters

Maidenhead, England

Edmonton, Canada

JET-LUBE, INC.
4849 HOMESTEAD RD.,
SUITE 232
HOUSTON, TX 77028

WATS: 800-538-5823
PHONE: 713-670-5700
FAX: 713-678-4604
sales@jetlube.com
www.jetlube.com

JET-LUBE, INC.

MATERIAL SAFETY DATA SHEET

I

Product Name: **MARINE KOPR™**
Chemical Family: Petroleum based lubricating anti-seize
Use: Anti-seize/anti-gall coating for threaded fasteners and sliding applications.

Manufacturer/Supplier: JET-LUBE, INC.
Address: 4849 Homestead Rd., Ste. #232
Houston, TX, 77028 USA **Phone:** 713-670-5700
Emergency Phone: 713-670-5700 **Fax:** 713-678-4604
Chemtrec 24 hours (USA): 800-424-9300
Outside the USA: 703-527-3887

II

Hazardous Components	CAS No.	Wt%	OSHA PEL	ACGIH TLV	Other Limits of Exposure
Petroleum oil	64742525/64742014	60-100	Oil mist	N/A	STEL: 10mg/M³
Nonhazardous Blend	1314132/14807966 1317653/13463677 7782425	10-30	UN	UN	STEL: UN
Copper Powder	7440508	1-5	N/A	1mg/M³	STEL: 2mg/M³

III

Main Hazards–Health Effects
Eyes: May cause irritation. **Inhalation:** Viscous nature may block breathing passages if inhaled. **Ingestion:** May cause diarrhea.
Skin: Possible rash for persons with persensitivity.

IV

Eyes: Flush with water until all residual material is gone. If irritation persists, seek medical help. **Inhalation:** Clear air passage. If respiratory difficulty continues, seek medical help. **Ingestion:** Wash out mouth immediately. Consult physician. **Skin:** Wash thoroughly with hand cleanser, followed by soap & water. Contaminated clothing should be dry cleaned before reuse.

V

Extinguishing Media: Foam, dry powder, Halon®, carbon dioxide, sand, earth & water mist.
Unsuitable Extinguishing Media: Water jet. **Protective Equipment for Fire fighting:** Self-contained breathing apparatus.

VI

Personal Precautions: Wear gloves & protective overalls. **Environmental Precautions:** Do not allow it to enter drains.
Spillage: Scrape up bulk, then wipe up remainder with cloth. To prevent walking hazard, pick up remaining residue with diatomaceous earth.

VII

Handling: No special handling precautions necessary. **Storage:** Do not store at elevated temperatures.

VIII

Respiratory Protection: None needed. **Hand Protection:** Protective gloves for hypersensitive persons.
Eye Protection: Glasses, if applied to parts in motion. **Body Protection:** Overalls.

IX

Physical State: Semisolid paste **Color:** Bronze **Odor:** Petroleum **pH:** Neutral **Boiling Range/Point °F (°C):** <600 (316)
Melting Point °F (°C): 450 (232) **Flash Point (COC) °F (°C):** 430 (221) **Autoignition Temperature °F (°C):** >500 (260)
Explosive Properties: **LEL:** 0.9% **UEL:** 7% **Evaporation Rate (Butyl Acetate):** <0.01 **Partition Coefficient (Log Pow):** N/A
Vapor Pressure (kPa): <0.01 **Percent Volatiles:** Nil **Density (g/cm³):** 1.07 **Flammability:** Not flammable at ambient temperature.
OAR Value: N/A **Oxidizing Properties:** None **Water Solubility:** Nil **Vapor Density:** >5

X

Stability: Chemically stable under normal conditions. No photoreactive agents. **Conditions to Avoid:** Powerful sources of ignition & extreme temps. **Materials to Avoid:** Strong inorganic & organic acids, oxidizing & copper reactive agents.
Hazardous Decomposition Products: Burning generates smoke, airborne soot, hydrocarbons & oxides of carbon, sulfur & nitrogen. Residue mainly comprised of soot & mineral oxides.

XI

Acute Toxicity: Not known. **Irritancy–Skin:** Very mild. **Skin Sensitization:** Not known. **Subacute/Sub-chronic Toxicity:** Not known. **Genotoxicity:** None known. **Chronic Toxicity:** None known. **California Prop 65:** N/A
Carcinogen: **NTP:** No **IARC:** No **OSHA:** No **EC Class (67/548/EEC):** No **Allergens:** None known.
LC-50: 1.98g/lt-(mysidopsis bahia) based on assessment from related products. **LD-50:** N/A

XII

Possible Effects: May gernerate oil fractions that could act as a marine pollutant, but is unlikely.
Behavior: Relatively well behaved. Bioaccumulation potential nil. **Environmental Fate:** Highly unlikely to cause noteable contamination.

XIII

Product Disposal: Do not incinerate. Contact waste disposal company or local authority for advice.
Container Disposal: Pails without liner–see Product Disposal section above. Pails with plastic liner–pail may only be disposed of via standard waste disposal services, recycled or reused. Liner–see Product Disposal section above.

XIV

Not classified as hazardous for transport. **D.O.T.:** Nonhazardous **UN No.:** N/A **Air Transport (ICAO & IATA):** N/A
Sea Transport (IMO & IMDG): N/A **Road & Rail Transport (ADR/RID):** N/A

XV

Labeling Information: None needed **EC Annex 1 Classification:** Not Applicable. **R Phrases:** R22—harmful if swallowed.
S Phrases: None applicable, as known. **Ozone Depleting Chemicals:** Not applicable. **TSCA:** All components are listed.
WHMIS (Canada): Not controlled. **Canadian DSL:** All components listed. **SARA 311/312:** None **TSCA 12B Components:** None
40 CFR Part 372 (SARA Section 313): This product contains copper. **CERCLA:** Nonhazardous **RCRA Hazard Class:** Nonhazardous

XVI

SDS first issued. SDS data revised. **New Jersey Right To Know:** See Section II

Signature: _____
Prepared by: Donald A. Oldiges
Date Issued: September 21, 2009

As of issue date, the information contained herein is accurate and reliable to the best of **JET-LUBE'S** knowledge. **JET-LUBE®** does not warrant or guarantee its accuracy or reliability and shall not be liable for any loss or damage arising out of the use thereof. It is the user's responsibility to satisfy itself that the information offered for its consideration is suitable for its particular use.

LEGEND

I. Identification of the substance/preparation and company
II. Composition information on ingredients
III. Hazards identification
IV. First aid measures
V. Fire fighting measures
VI. Accidental release measures
VII. Handling and storage
VIII. Exposure control/personal protection
IX. Physical and chemical properties
X. Stability and reactivity
XI. Toxicological information
XII. Ecological information
XIII. Waste Disposal
XIV. Transport information
XV. Regulatory Information
XVI. Other information

HMIS SYMBOL

HEALTH	1
FLAMMABILITY	1
REACTIVITY	0
PPI	B

NFPA SYMBOL

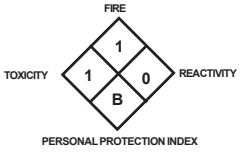

MATERIAL SAFETY DATA SHEET

SECTION 1 PRODUCT AND COMPANY IDENTIFICATION

PRODUCT

Product Name: **MOBIL DELVAC 1230**
Product Description: Base Oil and Additives
Product Code: 201520602530, 440677-00, 971892
Intended Use: Engine oil

COMPANY IDENTIFICATION

Supplier: **EXXON MOBIL CORPORATION**
3225 GALLOWS RD.
FAIRFAX, VA. 22037 USA

24 Hour Health Emergency	609-737-4411
Transportation Emergency Phone	800-424-9300
ExxonMobil Transportation No.	281-834-3296
Product Technical Information	800-662-4525, 800-947-9147
MSDS Internet Address	http://www.exxon.com, http://www.mobil.com

SECTION 2 COMPOSITION / INFORMATION ON INGREDIENTS

Reportable Hazardous Substance(s) or Complex Substance(s)

Name	CAS#	Concentration*
ZINC DITHIOPHOSPHATE	68649-42-3	< 2.5%

* All concentrations are percent by weight unless material is a gas. Gas concentrations are in percent by volume.

SECTION 3 HAZARDS IDENTIFICATION

This material is not considered to be hazardous according to regulatory guidelines (see (M)SDS Section 15).

POTENTIAL HEALTH EFFECTS

Low order of toxicity. Excessive exposure may result in eye, skin, or respiratory irritation. High-pressure injection under skin may cause serious damage.

NFPA Hazard ID:	Health:	0	Flammability:	1	Reactivity:	0
HMIS Hazard ID:	Health:	0	Flammability:	1	Reactivity:	0

NOTE: This material should not be used for any other purpose than the intended use in Section 1 without expert advice. Health studies have shown that chemical exposure may cause potential human health risks which may vary from person to person.

SECTION 4 FIRST AID MEASURES

Inhalation

Remove from further exposure. For those providing assistance, avoid exposure to yourself or others. Use adequate respiratory protection. If respiratory irritation, dizziness, nausea, or unconsciousness occurs, seek immediate medical assistance. If breathing has stopped, assist ventilation with a mechanical device or use mouth-to-mouth resuscitation.

SKIN CONTACT

Wash contact areas with soap and water. If product is injected into or under the skin, or into any part of the body, regardless of the appearance of the wound or its size, the individual should be evaluated immediately by a physician as a surgical emergency. Even though initial symptoms from high pressure injection may be minimal or absent, early surgical treatment within the first few hours may significantly reduce the ultimate extent of injury.

EYE CONTACT

Flush thoroughly with water. If irritation occurs, get medical assistance.

Ingestion

First aid is normally not required. Seek medical attention if discomfort occurs.

SECTION 5 FIRE FIGHTING MEASURES

EXTINGUISHING MEDIA

Appropriate Extinguishing Media: Use water fog, foam, dry chemical or carbon dioxide (CO2) to extinguish flames.

Inappropriate Extinguishing Media: Straight Streams of Water

FIRE FIGHTING

Fire Fighting Instructions: Evacuate area. Prevent runoff from fire control or dilution from entering streams, sewers, or drinking water supply. Firefighters should use standard protective equipment and in enclosed spaces, self-contained breathing apparatus (SCBA). Use water spray to cool fire exposed surfaces and to protect personnel.

Hazardous Combustion Products: Smoke, Fume, Aldehydes, Sulfur Oxides, Incomplete combustion products, Oxides of carbon

FLAMMABILITY PROPERTIES

Flash Point [Method]: >200C (392F) [ASTM D-92]
Flammable Limits (Approximate volume % in air): LEL: 0.9 UEL: 7.0
Autoignition Temperature: N/D

SECTION 6 ACCIDENTAL RELEASE MEASURES

Notification Procedures

In the event of a spill or accidental release, notify relevant authorities in accordance with all applicable regulations. US regulations require reporting releases of this material to the environment which exceed the applicable reportable quantity or oil spills which could reach any waterway including intermittent dry creeks. The

National Response Center can be reached at (800)424-8802.

SPILL MANAGEMENT

Land Spill: Stop leak if you can do it without risk. Recover by pumping or with suitable absorbent.

Water Spill: Stop leak if you can do it without risk. Confine the spill immediately with booms. Warn other shipping. Remove from the surface by skimming or with suitable absorbents. Seek the advice of a specialist before using dispersants.

Water spill and land spill recommendations are based on the most likely spill scenario for this material; however, geographic conditions, wind, temperature, (and in the case of a water spill) wave and current direction and speed may greatly influence the appropriate action to be taken. For this reason, local experts should be consulted. Note: Local regulations may prescribe or limit action to be taken.

ENVIRONMENTAL PRECAUTIONS

Large Spills: Dike far ahead of liquid spill for later recovery and disposal. Prevent entry into waterways, sewers, basements or confined areas.

SECTION 7 HANDLING AND STORAGE

HANDLING

Avoid contact with used product. Prevent small spills and leakage to avoid slip hazard.

Static Accumulator: This material is a static accumulator.

STORAGE

Do not store in open or unlabelled containers.

SECTION 8 EXPOSURE CONTROLS / PERSONAL PROTECTION

EXPOSURE LIMIT VALUES

Exposure limits/standards for materials that can be formed when handling this product: When mists / aerosols can occur, the following are recommended: 5 mg/m³ - ACGIH TLV, 10 mg/m³ - ACGIH STEL, 5 mg/m³ - OSHA PEL.

NOTE: Limits/standards shown for guidance only. Follow applicable regulations.

ENGINEERING CONTROLS

The level of protection and types of controls necessary will vary depending upon potential exposure conditions. Control measures to consider:

No special requirements under ordinary conditions of use and with adequate ventilation.

Personal Protection

Personal protective equipment selections vary based on potential exposure conditions such as applications, handling practices, concentration and ventilation. Information on the selection of protective equipment for use

with this material, as provided below, is based upon intended, normal usage.

Respiratory Protection: If engineering controls do not maintain airborne contaminant concentrations at a level which is adequate to protect worker health, an approved respirator may be appropriate. Respirator selection, use, and maintenance must be in accordance with regulatory requirements, if applicable. Types of respirators to be considered for this material include:

No special requirements under ordinary conditions of use and with adequate ventilation.

For high airborne concentrations, use an approved supplied-air respirator, operated in positive pressure mode. Supplied air respirators with an escape bottle may be appropriate when oxygen levels are inadequate, gas/vapor warning properties are poor, or if air purifying filter capacity/rating may be exceeded.

Hand Protection: Any specific glove information provided is based on published literature and glove manufacturer data. Glove suitability and breakthrough time will differ depending on the specific use conditions. Contact the glove manufacturer for specific advice on glove selection and breakthrough times for your use conditions. Inspect and replace worn or damaged gloves. The types of gloves to be considered for this material include:

No protection is ordinarily required under normal conditions of use.

Eye Protection: If contact is likely, safety glasses with side shields are recommended.

Skin and Body Protection: Any specific clothing information provided is based on published literature or manufacturer data. The types of clothing to be considered for this material include:

No skin protection is ordinarily required under normal conditions of use. In accordance with good industrial hygiene practices, precautions should be taken to avoid skin contact.

Specific Hygiene Measures: Always observe good personal hygiene measures, such as washing after handling the material and before eating, drinking, and/or smoking. Routinely wash work clothing and protective equipment to remove contaminants. Discard contaminated clothing and footwear that cannot be cleaned. Practice good housekeeping.

ENVIRONMENTAL CONTROLS

See Sections 6, 7, 12, 13.

SECTION 9 PHYSICAL AND CHEMICAL PROPERTIES

Typical physical and chemical properties are given below. Consult the Supplier in Section 1 for additional data.

GENERAL INFORMATION

Physical State: Liquid
Color: brown
Odor: Characteristic
Odor Threshold: N/D

IMPORTANT HEALTH, SAFETY, AND ENVIRONMENTAL INFORMATION

Relative Density (at 15 C): 0.892
Flash Point [Method]: >200C (392F) [ASTM D-92]
Flammable Limits (Approximate volume % in air): LEL: 0.9 UEL: 7.0
Autoignition Temperature: N/D
Boiling Point / Range: > 316C (600F)

Vapor Density (Air = 1): N/D
Vapor Pressure: < 0.013 kPa (0.1 mm Hg) at 20 C
Evaporation Rate (N-Butyl Acetate = 1): N/D
pH: N/A
Log Pow (n-Octanol/Water Partition Coefficient): > 3.5
Solubility in Water: Negligible
Viscosity: 109.8 cSt (109.8 mm²/sec) at 40 C | 12 cSt (12 mm²/sec) at 100C
Oxidizing Properties: See Sections 3, 15, 16.

OTHER INFORMATION
Freezing Point: N/D
Melting Point: N/A
Pour Point: -15°C (5°F)
DMSO Extract (mineral oil only), IP-346: < 3 %wt

SECTION 10 STABILITY AND REACTIVITY

STABILITY: Material is stable under normal conditions.

CONDITIONS TO AVOID: Excessive heat. High energy sources of ignition.

MATERIALS TO AVOID: Strong oxidizers

HAZARDOUS DECOMPOSITION PRODUCTS: Material does not decompose at ambient temperatures.

HAZARDOUS POLYMERIZATION: Will not occur.

SECTION 11 TOXICOLOGICAL INFORMATION

ACUTE TOXICITY

Route of Exposure	Conclusion / Remarks
Inhalation	
Toxicity (Rat): LC50 > 5000 mg/m³	Minimally Toxic. Based on test data for structurally similar materials.
Irritation: No end point data.	Negligible hazard at ambient/normal handling temperatures. Based on assessment of the components.
Ingestion	
Toxicity (Rat): LD50 > 5000 mg/kg	Minimally Toxic. Based on test data for structurally similar materials.
Skin	
Toxicity (Rabbit): LD50 > 5000 mg/kg	Minimally Toxic. Based on test data for structurally similar materials.
Irritation (Rabbit): Data available.	Negligible irritation to skin at ambient temperatures. Based on test data for structurally similar materials.
Eye	
Irritation (Rabbit): Data available.	May cause mild, short-lasting discomfort to eyes. Based on test data for structurally similar materials.

CHRONIC/OTHER EFFECTS
For the product itself:

Diesel engine oils: Not carcinogenic in animals tests. Used and unused diesel engine oils did not produce any carcinogenic effects in chronic mouse skin painting studies.
Oils that are used in gasoline engines may become hazardous and display the following properties: Carcinogenic in animal tests. Caused mutations in vitro. Possible allergen and photoallergen. Contains polycyclic aromatic compounds (PAC) from combustion products of gasoline and/or thermal degradation products.

Contains:
Base oil severely refined: Not carcinogenic in animal studies. Representative material passes IP-346, Modified Ames test, and/or other screening tests. Dermal and inhalation studies showed minimal effects; lung non-specific infiltration of immune cells, oil deposition and minimal granuloma formation. Not sensitizing in test animals.

Additional information is available by request.

The following ingredients are cited on the lists below: None.

--REGULATORY LISTS SEARCHED--

1 = NTP CARC	3 = IARC 1	5 = IARC 2B
2 = NTP SUS	4 = IARC 2A	6 = OSHA CARC

SECTION 12 ECOLOGICAL INFORMATION

The information given is based on data available for the material, the components of the material, and similar materials.

ECOTOXICITY
Material -- Not expected to be harmful to aquatic organisms.

MOBILITY
Base oil component -- Low solubility and floats and is expected to migrate from water to the land. Expected to partition to sediment and wastewater solids.

PERSISTENCE AND DEGRADABILITY
Biodegradation:
Base oil component -- Expected to be inherently biodegradable

SECTION 13 DISPOSAL CONSIDERATIONS

Disposal recommendations based on material as supplied. Disposal must be in accordance with current applicable laws and regulations, and material characteristics at time of disposal.

DISPOSAL RECOMMENDATIONS
Product is suitable for burning in an enclosed controlled burner for fuel value or disposal by supervised incineration at very high temperatures to prevent formation of undesirable combustion products.

REGULATORY DISPOSAL INFORMATION

RCRA Information: The unused product, in our opinion, is not specifically listed by the EPA as a hazardous waste (40 CFR, Part 261D), nor is it formulated to contain materials which are listed as hazardous wastes. It does not exhibit the hazardous characteristics of ignitability, corrositivity or reactivity and is not formulated with contaminants as determined by the Toxicity Characteristic Leaching Procedure (TCLP). However, used product may be regulated.

Empty Container Warning Empty Container Warning (where applicable): Empty containers may contain residue and can be dangerous. Do not attempt to refill or clean containers without proper instructions. Empty drums should be completely drained and safely stored until appropriately reconditioned or disposed. Empty containers should be taken for recycling, recovery, or disposal through suitably qualified or licensed contractor and in accordance with governmental regulations. DO NOT PRESSURISE, CUT, WELD, BRAZE, SOLDER, DRILL, GRIND, OR EXPOSE SUCH CONTAINERS TO HEAT, FLAME, SPARKS, STATIC ELECTRICITY, OR OTHER SOURCES OF IGNITION. THEY MAY EXPLODE AND CAUSE INJURY OR DEATH.

SECTION 14 TRANSPORT INFORMATION

LAND (DOT) : Not Regulated for Land Transport

LAND (TDG) : Not Regulated for Land Transport

SEA (IMDG) : Not Regulated for Sea Transport according to IMDG-Code

AIR (IATA) : Not Regulated for Air Transport

SECTION 15 REGULATORY INFORMATION

OSHA HAZARD COMMUNICATION STANDARD: When used for its intended purposes, this material is not classified as hazardous in accordance with OSHA 29 CFR 1910.1200.

NATIONAL CHEMICAL INVENTORY LISTING: DSL, KECI, TSCA
Special Cases:

Inventory	Status
AICS	Restrictions Apply
EINECS	Restrictions Apply

EPCRA: This material contains no extremely hazardous substances.

SARA (311/312) REPORTABLE HAZARD CATEGORIES: None.

SARA (313) TOXIC RELEASE INVENTORY:

Chemical Name	CAS Number	Typical Value
ZINC DITHIOPHOSPHATE	68649-42-3	< 2.5%

The following ingredients are cited on the lists below:

Chemical Name	CAS Number	List Citations
ZINC DITHIOPHOSPHATE	68649-42-3	13, 15, 17

--REGULATORY LISTS SEARCHED--

1 = ACGIH ALL	6 = TSCA 5a2	11 = CA P65 REPRO	16 = MN RTK
2 = ACGIH A1	7 = TSCA 5e	12 = CA RTK	17 = NJ RTK
3 = ACGIH A2	8 = TSCA 6	13 = IL RTK	18 = PA RTK
4 = OSHA Z	9 = TSCA 12b	14 = LA RTK	19 = RI RTK
5 = TSCA 4	10 = CA P65 CARC	15 = MI 293	

Code key: CARC=Carcinogen; REPRO=Reproductive

SECTION 16 OTHER INFORMATION

N/D = Not determined, N/A = Not applicable

THIS SAFETY DATA SHEET CONTAINS THE FOLLOWING REVISIONS:
No revision information is available.

The information and recommendations contained herein are, to the best of ExxonMobil's knowledge and belief, accurate and reliable as of the date issued. You can contact ExxonMobil to insure that this document is the most current available from ExxonMobil. The information and recommendations are offered for the user's consideration and examination. It is the user's responsibility to satisfy itself that the product is suitable for the intended use. If buyer repackages this product, it is the user's responsibility to insure proper health, safety and other necessary information is included with and/or on the container. Appropriate warnings and safe-handling procedures should be provided to handlers and users. Alteration of this document is strictly prohibited. Except to the extent required by law, re-publication or retransmission of this document, in whole or in part, is not permitted. The term, "ExxonMobil" is used for convenience, and may include any one or more of ExxonMobil Chemical Company, Exxon Mobil Corporation, or any affiliates in which they directly or indirectly hold any interest.

Internal Use Only
MHC: 0B, 0B, 0, 0, 0, 0 PPEC: A

DGN: 2003298XUS (543375)

Copyright 2002 Exxon Mobil Corporation, All rights reserved

Mystik JT-6 Hi-Temp No. 2

Material Safety Data Sheet

CITGO Petroleum Corporation
P.O. Box 4689
Houston, TX 77210

MSDS No. 665005002
Revision Date 8/21/2009

IMPORTANT: This MSDS is prepared in accordance with 29 CFR 1910.1200. Read this MSDS before transporting, handling, storing or disposing of this product and forward this information to employees, customers and users of this product.

Hazard Rankings

	HMIS	NFPA
Health Hazard	1	1
Fire Hazard	1	1
Reactivity	0	0

*** = Chronic Health Hazard**

Protective Equipment

Minimum Recommended
See Section 8 for Details

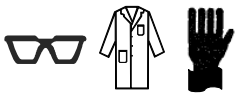

Emergency Overview

Physical State Semi-solid to solid (Smooth texture)
Color Red. **Odor** Mild petroleum odor

WARNING:
Injection under the skin can cause severe injury.
Most damage occurs in the first few hours.
Initial symptoms may be minimal.
Hot grease will cause thermal burns upon contact.
Spills may create a slipping hazard.

SECTION 1. PRODUCT IDENTIFICATION

Trade Name	Mystik® JT-6® Hi-Temp Grease NLGI No. 2	**Technical Contact**	(800) 248-4684
Product Number	Not available.	**Medical Emergency**	(832) 486-4700
CAS Number	Mixture.	**CHEMTREC Emergency (United States Only)**	(800) 424-9300
Product Family	Lubricating grease		
Synonyms	Lubricating grease; CITGO® Material Code: 665005002		

SECTION 2. COMPOSITION

Component Name(s)	CAS Registry No.	Concentration (%)
Highly-refined petroleum lubricant oils	Various	60 - 100
Lithium carboxylates	Proprietary Mixture	7 - 13
Proprietary Ingredients	Proprietary Mixture	1 - 5
Zinc and zinc compounds	Proprietary	<1

SECTION 3. HAZARDS IDENTIFICATION

Also see Emergency Overview and Hazard Ratings on the top of Page 1 of this MSDS.

Major Route(s) of Entry Skin contact.

Signs and Symptoms of Acute Exposure

Inhalation No significant adverse health effects are expected to occur upon short-term exposure at ambient temperatures. At elevated temperatures, product vapor may cause respiratory tract irritation. Repeated or prolonged overexposure to product mists can result in respiratory tract inflammation and an increased risk of infection.

Eye Contact

 Continued on Next Page

	This product can cause transient mild eye irritation with short-term contact with liquid sprays or mists. Symptoms include stinging, watering, redness, and swelling.
Skin Contact	This material can cause mild skin irritation from prolonged or repeated skin contact. Injection under the skin can cause inflammation and swelling. Injection of pressurized hydrocarbons can cause severe, permanent tissue damage. Initial symptoms may be minor. Injection of petroleum hydrocarbons requires immediate medical attention. Skin contact with hot material may result in severe burns.
Ingestion	This material can cause a laxative effect. If swallowed in large quantities, this material can obstruct the intestine.
Chronic Health Effects Summary	This product contains a petroleum-based mineral oil. Prolonged or repeated skin contact can cause mild irritation and inflammation characterized by drying, cracking, (dermatitis) or oil acne. Repeated or prolonged inhalation of petroleum-based mineral oil mists at concentrations above applicable workplace exposure levels can cause respiratory irritation or other pulmonary effects.
Conditions Aggravated by Exposure	Disorders of the following organs or organ systems that may be aggravated by significant exposure to this material or its components include: Skin
Target Organs	May cause damage to the following organs: skin.
Carcinogenic Potential	This product is not known to contain any components at concentrations above 0.1% which are considered carcinogenic by OSHA, IARC or NTP.

OSHA Hazard Classification is indicated by an "X" in the box adjacent to the hazard title. If no "X" is present, the product does not exhibit the hazard as defined in the OSHA Hazard Communication Standard (29 CFR 1910.1200).

OSHA Health Hazard Classification				OSHA Physical Hazard Classification					
Irritant		**Sensitizer**		**Combustible**		**Explosive**		**Pyrophoric**	
Toxic		**Highly Toxic**		**Flammable**		**Oxidizer**		**Water-reactive**	
Corrosive		**Carcinogenic**		**Compressed Gas**		**Organic Peroxide**		**Unstable**	

SECTION 4. FIRST AID MEASURES

Take proper precautions to ensure your own health and safety before attempting rescue or providing first aid. For more specific information, refer to Exposure Controls and Personal Protection in Section 8 of this MSDS.

Inhalation	Vaporization is not expected at ambient temperatures. This material is not expected to cause inhalation-related disorders under anticipated conditions of use. In case of overexposure, move the person to fresh air.
Eye Contact	Check for and remove contact lenses. Flush eyes with cool, clean, low-pressure water while occasionally lifting and lowering eyelids. Seek medical attention if excessive tearing, redness, or pain persists.
Skin Contact	If burned by hot material, cool skin by quenching with large amounts of cool water. For contact with product at ambient temperatures, remove contaminated shoes and clothing. Wipe off excess material. Wash exposed skin with mild soap and water. Seek medical attention if tissue appears damaged or if pain or irritation persists. Thoroughly clean contaminated clothing before reuse. Clean or discard contaminated leather goods. If material is injected under the skin, seek medical attention immediately.
Ingestion	Do not induce vomiting unless directed to by a physician. Rinse out mouth with water. Never give anything by mouth to a person who is not fully conscious. Allow small quantities to pass through the digestive system. If large amounts are swallowed or irritation or discomfort occurs, seek medical attention immediately.

 Continued on Next Page

Notes to Physician

SKIN: In the event of injection in underlying tissue, immediate treatment should include extensive incision, debridement and saline irrigation. Inadequate treatment can result in ischemia and gangrene. Early symptoms may be minimal.

INGESTION: Check for possible bowel obstruction with ingestion of large quantities of material.

SECTION 5. FIRE FIGHTING MEASURES

NFPA Flammability Classification NFPA Class-IIIB combustible material.

Flash Point Open cup: >150°C (>302°F) (Estimated).

Lower Flammable Limit No data. **Upper Flammable Limit** No data.

Autoignition Temperature Not available.

Hazardous Combustion Products Carbon dioxide, carbon monoxide, smoke, fumes, unburned hydrocarbons and oxides of sulfur, phosphorus, zinc and/or nitrogen.

Special Properties Fight the fire from a safe distance in a protected location. Open any masses with a water stream to prevent reignition due to smoldering. Cool surface with water fog. Molten material can form flaming droplets if ignited. Water or foam can cause frothing. Use of water on product above 100° C (212° F) can cause product to expand with explosive force. Do not allow liquid runoff to enter sewers or public waters.

Extinguishing Media Use dry chemical, foam, carbon dioxide or water fog. Water or foam may cause frothing. Carbon dioxide and inert gas can displace oxygen. Use caution when applying carbon dioxide or inert gas in confined spaces.

Protection of Fire Fighters Firefighters must use full bunker gear including NIOSH-approved positive pressure self-contained breathing apparatus to protect against potential hazardous combustion or decomposition products and oxygen deficiencies.

SECTION 6. ACCIDENTAL RELEASE MEASURES

Take proper precautions to ensure your own health and safety before attempting spill control or clean-up. For more specific information, refer to the Emergency Overview on Page 1, Exposure Controls and Personal Protection in Section 8 and Disposal Considerations in Section 13 of this MSDS.

Do not touch damaged containers or spilled material unless wearing appropriate protective equipment. Slipping hazard; do not walk through spilled material. Stop leak if you can do so without risk. For small spills, absorb or cover with dry earth, sand, or other inert non-combustible absorbent material and place into waste containers for later disposal. Contain large spills to maximize product recovery or disposal. Prevent entry into waterways or sewers. In urban area, cleanup spill as soon as possible. In natural environments, seek cleanup advice from specialists to minimize physical habitat damage. This material will float on water. Absorbent pads and similar materials can be used. Comply with all laws and regulations.

SECTION 7. HANDLING AND STORAGE

Handling If this product is stored or applied in high-pressure systems such as grease guns or hydraulic lines, there is the potential for accidental injection into the skin and underlying tissues. Hydrocarbons injected into skin or underlying tissues are not readily removed by body fluids and can cause pain, swelling, chemical irritation, infection and tissue destruction. Early symptoms may be minimal. Workers must be aware of the significant hazards associated with a hydrocarbon injection injury. In the event of an injection injury, workers should seek medical treatment immediately. Avoid water contamination and elevated temperatures to minimize product degradation. Empty containers may contain product residues that can ignite

with explosive force. Do not pressurize, cut, weld, braze solder, drill, grind or expose containers to flames, sparks, heat or other potential ignition sources. Consult appropriate federal, state and local authorities before reusing, reconditioning, reclaiming, recycling or disposing of empty containers and/or waste residues of this product.

Storage Keep container tightly closed. Store in a cool, dry, well-ventilated area. Store only in approved containers. Do not store with strong oxidizing agents. Do not store at elevated temperatures. Avoid storing product in direct sunlight for extended periods of time. Storage area must meet OSHA requirements and applicable fire codes. Consult appropriate federal, state and local authorities before reusing, reconditioning, reclaiming, recycling or disposing of empty containers or waste residues of this product.

SECTION 8. EXPOSURE CONTROLS AND PERSONAL PROTECTION

Engineering Controls Ventilation controls are not normally required under anticipated conditions of use. Provide exhaust ventilation or other engineering controls if airborne mists or vapors concentrations exceed recommended occupational exposure limits listed below. An eye wash station and safety shower should be located near the work-station.

Personal Protective Equipment Personal protective equipment should be selected based upon the conditions under which this material is used. A hazard assessment of the work area for PPE requirements should be conducted by a qualified professional pursuant to OSHA regulations. The following pictograms represent the minimum requirements for personal protective equipment. For certain operations, additional PPE may be required.

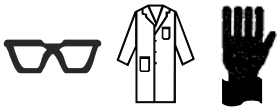

Eye Protection Safety glasses equipped with side shields are recommended as minimum protection in industrial settings. Wear goggles if splashing or spraying is anticipated. Wear goggles and face shield if material is heated above 125°F (51°C). Have suitable eye wash water available.

Hand Protection None required for incidental contact. Use gloves constructed of chemical resistant materials such as heavy nitrile rubber if frequent or prolonged contact is expected. Use heat-protective gloves when handling product at elevated temperatures.

Body Protection Use clean protective clothing if splashing or spraying conditions are present. Protective clothing may include long-sleeve outer garment, apron, or lab coat. If significant contact occurs, remove oil-contaminated clothing as soon as possible and promptly shower. Launder contaminated clothing before reuse or discard. Wear heat protective boots and protective clothing when handling material at elevated temperatures.

Respiratory Protection The need for respiratory protection is not anticipated under normal use conditions and with adequate ventilation. If elevated airborne concentrations above applicable workplace exposure levels are anticipated, a NIOSH-approved organic vapor respirator equipped with a dust/mist prefilter should be used. Protection factors vary depending upon the type of respirator used. Respirators should be used in accordance with OSHA requirements (29 CFR 1910.134).

General Comments Use good personal hygiene practices. Wash hands and other exposed skin areas with plenty of mild soap and water before eating, drinking, smoking, use of toilet facilities, or leaving work. DO NOT use gasoline, kerosene, solvents or harsh abrasives as skin cleaners. Since specific exposure standards/control limits have not been established for this product, the "Oil Mist, Mineral" exposure limits shown below are suggested as minimum control guidelines.

Occupational Exposure Guidelines

Substance	Applicable Workplace Exposure Levels

Oil Mist, Mineral	**ACGIH (United States).** TWA: 5 mg/m^3 STEL: 10 mg/m^3 **OSHA (United States).** TWA: 5 mg/m^3
Stearates	**ACGIH TLV (United States).** TWA: 10 mg/m^3 8 hour(s).

SECTION 9. PHYSICAL AND CHEMICAL PROPERTIES (TYPICAL)

Physical State	Semi-solid to solid (Smooth texture)	**Color**	Red.	**Odor**	Mild petroleum odor
Specific Gravity	0.93 (Water = 1)	**pH**	Not applicable.	**Vapor Density**	>10 (Air = 1)
Boiling Range	Not available.			**Melting/Freezing Point**	Not available.
Vapor Pressure	<0.001 kPa (<0.01 mm Hg) (at 20°C)			**Volatility**	Negligible volatility.
Solubility in Water	Negligible solubility in cold water.			**Viscosity (cSt @ 40°C)**	Not available.

Flash Point	Open cup: >150°C (>302°F) (Estimated).
Additional Properties	NLGI Grade: 2 Thickener: Lithium Texture: Smooth

SECTION 10. STABILITY AND REACTIVITY

Chemical Stability	Stable.	**Hazardous Polymerization**	Not expected to occur.
Conditions to Avoid	Keep away from extreme heat, sparks, open flame, and strongly oxidizing conditions.		
Materials Incompatibility	Strong oxidizers.		
Hazardous Decomposition Products	No additional hazardous decomposition products were identified other than the combustion products identified in Section 5 of this MSDS.		

SECTION 11. TOXICOLOGICAL INFORMATION

For other health-related information, refer to the Emergency Overview on Page 1 and the Hazards Identification in Section 3 of this MSDS.

Toxicity Data

Highly-refined petroleum lubricant oils

ORAL (LD50):	Acute: >5000 mg/kg [Rat].
DERMAL (LD50):	Acute: >2000 mg/kg [Rabbit].

Mineral oil mists derived from highly refined oils are reported to have low acute and sub-acute toxicities in animals. Effects from single and short-term repeated exposures to high concentrations of mineral oil mists well above applicable workplace exposure levels include lung inflammatory reaction, lipoid granuloma formation and lipoid pneumonia. In acute and sub-acute studies involving exposures to lower concentrations of mineral oil mists at or near current work place exposure levels produced no significant toxicological effects. In long term studies (up to two years) no carcinogenic effects have been reported in any animal species tested.

Grease:

Injection of pressurized hydrocarbons under the skin, in muscle or into the blood stream can cause irritation, inflammation, swelling, fever and mild central nervous system depression. Injection of pressurized hydrocarbons can cause severe, permanent tissue damage.

SECTION 12. ECOLOGICAL INFORMATION

Ecotoxicity Ecotoxicity data are not available for this product.

Environmental Fate An environmental fate analysis is not available for this specific product. Plants and animals may experience harmful or fatal effects when coated with petroleum products. Petroleum-based (mineral) lubricating oils normally will float on water. In stagnant or slow-flowing waterways, an oil layer can cover a large surface area. As a result, this oil layer might limit or eliminate natural atmospheric oxygen transport into the water. With time, if not removed, oxygen depletion in the waterway may be sufficient to cause a fish kill or create an anaerobic environment.

SECTION 13. DISPOSAL CONSIDERATIONS

Hazard characteristic and regulatory waste stream classification can change with product use. Accordingly, it is the responsibility of the user to determine the proper storage, transportation, treatment and/or disposal methodologies for spent materials and residues at the time of disposition.

Conditions of use may cause this material to become a "hazardous waste", as defined by federal or state regulations. It is the responsibility of the user to determine if the material is a "hazardous waste" at the time of disposal. Transportation, treatment, storage, and disposal of waste material must be conducted in accordance with RCRA regulations (see 40 CFR 260 through 40 CFR 271). State and/or local regulations may be more restrictive. Contact your regional US EPA office for guidance concerning case specific disposal issues. Empty drums and pails retain residue. DO NOT pressurize, cut, weld, braze, solder, drill, grind, or expose this product's empty container to heat, flame, or other ignition sources. DO NOT attempt to clean it. Empty drums and pails should be drained completely, properly bunged or sealed, and promptly sent to a reconditioner.

SECTION 14. TRANSPORT INFORMATION

The shipping description below may not represent requirements for all modes of transportation, shipping methods or locations outside of the United States.

US DOT Status Not regulated by the U.S. Department of Transportation as a hazardous material.

Proper Shipping Name Not regulated.

Hazard Class Not regulated.

Packing Group Not applicable.

UN/NA Number Not regulated.

Reportable Quantity A Reportable Quantity (RQ) has not been established for this material.

Placard(s)

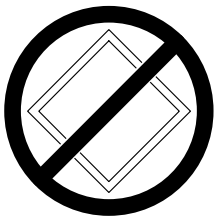

Emergency Response Guide No. Not applicable.

MARPOL III Status Not a DOT "Marine Pollutant" per 49 CFR 171.8.

Oil: The product(s) represented by this MSDS is (are) regulated as “oil” under 49 CFR Part 130. Shipments by rail or highway in packaging having a capacity of 3500 gallons or more or in a quantity greater 42,000 gallons are subject to these requirements. In addition, mixtures containing 10% or more of this product may be subject to these requirements.

SECTION 15. REGULATORY INFORMATION

TSCA Inventory	This product and/or its components are listed on the Toxic Substances Control Act (TSCA) inventory.
SARA 302/304 Emergency Planning and Notification	The Superfund Amendments and Reauthorization Act of 1986 (SARA) Title III requires facilities subject to Subparts 302 and 304 to submit emergency planning and notification information based on Threshold Planning Quantities (TPQs) and Reportable Quantities (RQs) for "Extremely Hazardous Substances" listed in 40 CFR 302.4 and 40 CFR 355. No components were identified.
SARA 311/312 Hazard Identification	The Superfund Amendments and Reauthorization Act of 1986 (SARA) Title III requires facilities subject to this subpart to submit aggregate information on chemicals by "Hazard Category" as defined in 40 CFR 370.2. This material would be classified under the following hazard categories: No SARA 311/312 hazard categories identified.
SARA 313 Toxic Chemical Notification and Release Reporting	This product contains the following components in concentrations above *de minimis* levels that are listed as toxic chemicals in 40 CFR Part 372 pursuant to the requirements of Section 313 of SARA: No components were identified.
CERCLA	The Comprehensive Environmental Response, Compensation, and Liability Act of 1980 (CERCLA) requires notification of the National Response Center concerning release of quantities of "hazardous substances" equal to or greater than the reportable quantities (RQ's) listed in 40 CFR 302.4. As defined by CERCLA, the term "hazardous substance" does not include petroleum, including crude oil or any fraction thereof which is not otherwise specifically designated in 40 CFR 302.4. Chemical substances present in this product or refinery stream that may be subject to this statute are: Zinc and Zinc Compounds, Concentration: <1%
Clean Water Act (CWA)	This material is classified as an oil under Section 311 of the Clean Water Act (CWA) and the Oil Pollution Act of 1990 (OPA). Discharges or spills which produce a visible sheen on waters of the United States, their adjoining shorelines, or into conduits leading to surface waters must be reported to the EPA's National Response Center at (800) 424-8802.
California Proposition 65	This material may contain the following components which are known to the State of California to cause cancer, birth defects or other reproductive harm, and may be subject to the requirements of California Proposition 65 (CA Health & Safety Code Section 25249.5): Ethylbenzene: <0.003% Toluene: <0.001%
New Jersey Right-to-Know Label	Petroleum Oil
Additional Remarks	No additional regulatory remarks.

SECTION 16. OTHER INFORMATION

Refer to the top of Page 1 for the HMIS and NFPA Hazard Ratings for this product.

REVISION INFORMATION

Version Number	6.0
Revision Date	8/21/2009

ABBREVIATIONS

AP: Approximately	EQ: Equal	>: Greater Than	<: Less Than
NA: Not Applicable	ND: No Data	NE: Not Established	

ACGIH: American Conference of Governmental Industrial Hygienists

AIHA: American Industrial Hygiene Association

IARC: International Agency for Research on Cancer

NIOSH: National Institute of Occupational Safety and Health

NPCA: National Paint and Coating Manufacturers Association

EPA: US Environmental Protection Agency

HMIS: Hazardous Materials Information System

OSHA: Occupational Safety and Health Administration

NTP: National Toxicology Program

NFPA: National Fire Protection Association

DISCLAIMER OF LIABILITY

THE INFORMATION IN THIS MSDS WAS OBTAINED FROM SOURCES WHICH WE BELIEVE ARE RELIABLE. HOWEVER, THE INFORMATION IS PROVIDED WITHOUT ANY WARRANTY, EXPRESSED OR IMPLIED REGARDING ITS CORRECTNESS. SOME INFORMATION PRESENTED AND CONCLUSIONS DRAWN HEREIN ARE FROM SOURCES OTHER THAN DIRECT TEST DATA ON THE SUBSTANCE ITSELF. THIS MSDS WAS PREPARED AND IS TO BE USED ONLY FOR THIS PRODUCT. IF THE PRODUCT IS USED AS A COMPONENT IN ANOTHER PRODUCT, THIS MSDS INFORMATION MAY NOT BE APPLICABLE. USERS SHOULD MAKE THEIR OWN INVESTIGATIONS TO DETERMINE THE SUITABILITY OF THE INFORMATION OR PRODUCTS FOR THEIR PARTICULAR PURPOSE.

THE CONDITIONS OR METHODS OF HANDLING, STORAGE, USE, AND DISPOSAL OF THE PRODUCT ARE BEYOND OUR CONTROL AND MAY BE BEYOND OUR KNOWLEDGE. FOR THIS AND OTHER REASONS, WE DO NOT ASSUME RESPONSIBILITY AND EXPRESSLY DISCLAIM LIABILITY FOR LOSS, DAMAGE OR EXPENSE ARISING OUT OF OR IN ANY WAY CONNECTED WITH HANDLING, STORAGE, USE OR DISPOSAL OF THE PRODUCT.

* * * * * END OF MSDS * * * * *

Mystik® JT-6® Multi-Purpose Grease, No. 2

Material Safety Data Sheet

CITGO Petroleum Corporation
P.O. Box 4689
Houston, TX 77210

MSDS No. 665006002
Revision Date 7/2/2009

IMPORTANT: This MSDS is prepared in accordance with 29 CFR 1910.1200. Read this MSDS before transporting, handling, storing or disposing of this product and forward this information to employees, customers and users of this product.

Hazard Rankings

	HMIS	NFPA
Health Hazard	1	1
Fire Hazard	1	1
Reactivity	0	0

*** = Chronic Health Hazard**

Emergency Overview

Physical State Semi-solid to solid (Smooth and adhesive)
Color Amber. **Odor** Mild petroleum odor

WARNING:
Injection under the skin can cause severe injury.
Most damage occurs in the first few hours.
Initial symptoms may be minimal.
Hot grease will cause thermal burns upon contact.
Spills may create a slipping hazard.

Protective Equipment

Minimum Recommended
See Section 8 for Details

SECTION 1. PRODUCT IDENTIFICATION

Trade Name	Mystik® JT-6® Multi-Purpose Grease, No. 2	**Technical Contact**	(800) 248-4684
Product Number	665006002	**Medical Emergency**	(832) 486-4700
CAS Number	Mixture.	**CHEMTREC Emergency (United States Only)**	(800) 424-9300
Product Family	Lubricating grease		
Synonyms	Lubricating grease; CITGO® Material Code: 665006002, 665995002, 663996002		

SECTION 2. COMPOSITION

Component Name(s)	CAS Registry No.	Concentration (%)
Highly-refined petroleum lubricant oils	Various	60 - 100
Calcium, 12-hydroxy Stearate	3159-62-4	7 - 13
Proprietary Ingredients	Proprietary Mixture	1 - 5
Antimony and antimony compounds	Proprietary	<1

SECTION 3. HAZARDS IDENTIFICATION

Also see Emergency Overview and Hazard Ratings on the top of Page 1 of this MSDS.

Major Route(s) of Entry Skin contact.

Signs and Symptoms of Acute Exposure

Inhalation	No significant adverse health effects are expected to occur upon short-term exposure at ambient temperatures. At elevated temperatures, product vapor may cause respiratory tract irritation. Repeated or prolonged overexposure to product mists can result in respiratory tract inflammation and an increased risk of infection.
Eye Contact	This product can cause transient mild eye irritation with short-term contact with liquid sprays or mists. Symptoms include stinging, watering, redness, and swelling.
Skin Contact	This material can cause mild skin irritation from prolonged or repeated skin contact. Injection under the skin can cause inflammation and swelling. Injection of pressurized hydrocarbons can cause severe, permanent tissue damage. Initial symptoms may be minor. Injection of petroleum hydrocarbons requires immediate medical attention. Skin contact with hot material may result in severe burns.
Ingestion	This material can cause a laxative effect. If swallowed in large quantities, this material can obstruct the intestine.
Chronic Health Effects Summary	This product contains a petroleum-based mineral oil. Prolonged or repeated skin contact can cause mild irritation and inflammation characterized by drying, cracking, (dermatitis) or oil acne. Repeated or prolonged inhalation of petroleum-based mineral oil mists at concentrations above applicable workplace exposure levels can cause respiratory irritation or other pulmonary effects.
Conditions Aggravated by Exposure	Disorders of the following organs or organ systems that may be aggravated by significant exposure to this material or its components include: Skin
Target Organs	May cause damage to the following organs: skin.
Carcinogenic Potential	This product is not known to contain any components at concentrations above 0.1% which are considered carcinogenic by OSHA, IARC or NTP.

OSHA Hazard Classification is indicated by an "X" in the box adjacent to the hazard title. If no "X" is present, the product does not exhibit the hazard as defined in the OSHA Hazard Communication Standard (29 CFR 1910.1200).

OSHA Health Hazard Classification				OSHA Physical Hazard Classification					
Irritant		Sensitizer		Combustible		Explosive		Pyrophoric	
Toxic		Highly Toxic		Flammable		Oxidizer		Water-reactive	
Corrosive		Carcinogenic		Compressed Gas		Organic Peroxide		Unstable	

SECTION 4. FIRST AID MEASURES

Take proper precautions to ensure your own health and safety before attempting rescue or providing first aid. For more specific information, refer to Exposure Controls and Personal Protection in Section 8 of this MSDS.

Inhalation	Vaporization is not expected at ambient temperatures. This material is not expected to cause inhalation-related disorders under anticipated conditions of use. In case of overexposure, move the person to fresh air.
Eye Contact	Check for and remove contact lenses. Flush eyes with cool, clean, low-pressure water while occasionally lifting and lowering eyelids. Seek medical attention if excessive tearing, redness, or pain persists.
Skin Contact	If burned by hot material, cool skin by quenching with large amounts of cool water. For contact with product at ambient temperatures, remove contaminated shoes and clothing. Wipe off excess material. Wash exposed skin with mild soap and water. Seek medical attention if tissue appears damaged or if pain or irritation persists. Thoroughly clean contaminated clothing before reuse. Clean or discard contaminated leather goods. If material is injected under the skin, seek medical attention immediately.

Ingestion Do not induce vomiting unless directed to by a physician. Rinse out mouth with water. Never give anything by mouth to a person who is not fully conscious. Allow small quantities to pass through the digestive system. If large amounts are swallowed or irritation or discomfort occurs, seek medical attention immediately.

Notes to Physician SKIN: In the event of injection in underlying tissue, immediate treatment should include extensive incision, debridement and saline irrigation. Inadequate treatment can result in ischemia and gangrene. Early symptoms may be minimal.

INGESTION: Check for possible bowel obstruction with ingestion of large quantities of material.

SECTION 5. FIRE FIGHTING MEASURES

NFPA Flammability Classification NFPA Class-IIIB combustible material.

Flash Point Open cup: >150°C (>302°F) (Estimated.).

Lower Flammable Limit No data. **Upper Flammable Limit** No data.

Autoignition Temperature Not available.

Hazardous Combustion Products Carbon dioxide, carbon monoxide, smoke, fumes, unburned hydrocarbons and oxides of sulfur, antimony, phosphorus and nitrogen.

Special Properties Fight the fire from a safe distance in a protected location. Open any masses with a water stream to prevent reignition due to smoldering. Cool surface with water fog. Molten material can form flaming droplets if ignited. Water or foam can cause frothing. Use of water on product above 100° C (212° F) can cause product to expand with explosive force. Do not allow liquid runoff to enter sewers or public waters.

Extinguishing Media Use dry chemical, foam, carbon dioxide or water fog. Water or foam may cause frothing. Carbon dioxide and inert gas can displace oxygen. Use caution when applying carbon dioxide or inert gas in confined spaces.

Protection of Fire Fighters Firefighters must use full bunker gear including NIOSH-approved positive pressure self-contained breathing apparatus to protect against potential hazardous combustion or decomposition products and oxygen deficiencies.

SECTION 6. ACCIDENTAL RELEASE MEASURES

Take proper precautions to ensure your own health and safety before attempting spill control or clean-up. For more specific information, refer to the Emergency Overview on Page 1, Exposure Controls and Personal Protection in Section 8 and Disposal Considerations in Section 13 of this MSDS.

Do not touch damaged containers or spilled material unless wearing appropriate protective equipment. Slipping hazard; do not walk through spilled material. Stop leak if you can do so without risk. For small spills, absorb or cover with dry earth, sand, or other inert non-combustible absorbent material and place into waste containers for later disposal. Contain large spills to maximize product recovery or disposal. Prevent entry into waterways or sewers. In urban area, cleanup spill as soon as possible. In natural environments, seek cleanup advice from specialists to minimize physical habitat damage. This material will float on water. Absorbent pads and similar materials can be used. Comply with all laws and regulations.

SECTION 7. HANDLING AND STORAGE

Handling

If this product is stored or applied in high-pressure systems such as grease guns or hydraulic lines, there is the potential for accidental injection into the skin and underlying tissues. Hydrocarbons injected into skin or underlying tissues are not readily removed by body fluids and can cause pain, swelling, chemical irritation, infection and tissue destruction. Early symptoms may be minimal. Workers must be aware of the significant hazards associated with a hydrocarbon injection injury. In the event of an injection injury, workers should seek medical treatment immediately. Avoid water contamination and elevated temperatures to minimize product degradation. Empty containers may contain product residues that can ignite with explosive force. Do not pressurize, cut, weld, braze solder, drill, grind or expose containers to flames, sparks, heat or other potential ignition sources. Consult appropriate federal, state and local authorities before reusing, reconditioning, reclaiming, recycling or disposing of empty containers and/or waste residues of this product.

Storage

Keep container tightly closed. Store in a cool, dry, well-ventilated area. Store only in approved containers. Do not store with strong oxidizing agents. Do not store at elevated temperatures. Avoid storing product in direct sunlight for extended periods of time. Storage area must meet OSHA requirements and applicable fire codes. Consult appropriate federal, state and local authorities before reusing, reconditioning, reclaiming, recycling or disposing of empty containers or waste residues of this product.

SECTION 8. EXPOSURE CONTROLS AND PERSONAL PROTECTION

Engineering Controls

Ventilation controls are not normally required under anticipated conditions of use. Provide exhaust ventilation or other engineering controls if airborne mists or vapors concentrations exceed recommended occupational exposure limits listed below. An eye wash station and safety shower should be located near the work-station.

Personal Protective Equipment

Personal protective equipment should be selected based upon the conditions under which this material is used. A hazard assessment of the work area for PPE requirements should be conducted by a qualified professional pursuant to OSHA regulations. The following pictograms represent the minimum requirements for personal protective equipment. For certain operations, additional PPE may be required.

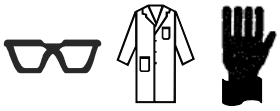

Eye Protection

Safety glasses equipped with side shields are recommended as minimum protection in industrial settings. Wear goggles if splashing or spraying is anticipated. Wear goggles and face shield if material is heated above 125°F (51°C). Have suitable eye wash water available.

Hand Protection

None required for incidental contact. Use gloves constructed of chemical resistant materials such as heavy nitrile rubber if frequent or prolonged contact is expected. Use heat-protective gloves when handling product at elevated temperatures.

Body Protection

Use clean protective clothing if splashing or spraying conditions are present. Protective clothing may include long-sleeve outer garment, apron, or lab coat. If significant contact occurs, remove oil-contaminated clothing as soon as possible and promptly shower. Launder contaminated clothing before reuse or discard. Wear heat protective boots and protective clothing when handling material at elevated temperatures.

Respiratory Protection

The need for respiratory protection is not anticipated under normal use conditions and with adequate ventilation. If elevated airborne concentrations above applicable workplace exposure levels are anticipated, a NIOSH-approved organic vapor respirator equipped with a dust/mist prefilter should be used. Protection factors vary depending upon the type of respirator used. Respirators should be used in accordance with OSHA requirements (29 CFR 1910.134).

 Continued on Next Page

General Comments Use good personal hygiene practices. Wash hands and other exposed skin areas with plenty of mild soap and water before eating, drinking, smoking, use of toilet facilities, or leaving work. DO NOT use gasoline, kerosene, solvents or harsh abrasives as skin cleaners. Since specific exposure standards/control limits have not been established for this product, the "Oil Mist, Mineral" exposure limits shown below are suggested as minimum control guidelines.

Occupational Exposure Guidelines

Substance	Applicable Workplace Exposure Levels
Oil Mist, Mineral	**ACGIH TLV (United States).** TWA: 5 mg/m^3 8 hour(s). STEL: 10 mg/m^3 15 minute(s). **OSHA PEL (United States).** TWA: 5 mg/m^3 8 hour(s).
Stearates	**ACGIH TLV (United States).** TWA: 10 mg/m^3 8 hour(s).
Antimony and antimony compounds	**ACGIH TLV (United States).** TWA: 0.5 mg/m^3 8 hour(s). **OSHA PEL (United States).** TWA: 0.5 mg/m^3 8 hour(s).

SECTION 9. PHYSICAL AND CHEMICAL PROPERTIES (TYPICAL)

Physical State	Semi-solid to solid (Smooth and adhesive)	**Color**	Amber.	**Odor**	Mild petroleum odor
Specific Gravity	0.92 (Water = 1)	**pH**	Not applicable	**Vapor Density**	>10 (Air = 1)
Boiling Range	Not available.			**Melting/Freezing Point**	Not available.
Vapor Pressure	<0.001 kPa (<0.01 mm Hg) (at 20°C)			**Volatility**	Negligible volatility.
Solubility in Water	Negligible solubility in cold water.			**Viscosity (cSt @ 40°C)**	1080

Flash Point Open cup: >150°C (>302°F) (Estimated.).

Additional Properties NLGI Grade: 2
Thickener: Calcium
Texture: Adhesive

SECTION 10. STABILITY AND REACTIVITY

Chemical Stability Stable. **Hazardous Polymerization** Not expected to occur.

Conditions to Avoid Keep away from extreme heat, sparks, open flame, and strongly oxidizing conditions.

Materials Incompatibility Strong oxidizers.

Hazardous Decomposition Products No additional hazardous decomposition products were identified other than the combustion products identified in Section 5 of this MSDS.

SECTION 11. TOXICOLOGICAL INFORMATION

For other health-related information, refer to the Emergency Overview on Page 1 and the Hazards Identification in Section 3 of this MSDS.

Toxicity Data

Highly-refined petroleum lubricant oils

ORAL (LD50):	Acute: >5000 mg/kg [Rat].
DERMAL (LD50):	Acute: >2000 mg/kg [Rabbit].

Mineral oil mists derived from highly refined oils are reported to have low acute and sub-acute toxicities in animals. Effects from single and short-term repeated exposures to high concentrations of mineral oil mists well above applicable workplace exposure levels include lung inflammatory reaction, lipoid granuloma formation and lipoid pneumonia. In acute and sub-acute studies involving exposures to lower concentrations of mineral oil mists at or near current work place exposure levels produced no significant toxicological effects. In long term studies (up to two years) no carcinogenic effects have been reported in any animal species tested.

Grease:
Injection of pressurized hydrocarbons under the skin, in muscle or into the blood stream can cause irritation, inflammation, swelling, fever and mild central nervous system depression. Injection of pressurized hydrocarbons can cause severe, permanent tissue damage.

SECTION 12. ECOLOGICAL INFORMATION

Ecotoxicity

Ecotoxicity data are not available for this product.

Environmental Fate

An environmental fate analysis is not available for this specific product. Plants and animals may experience harmful or fatal effects when coated with petroleum products. Petroleum-based (mineral) lubricating oils normally will float on water. In stagnant or slow-flowing waterways, an oil layer can cover a large surface area. As a result, this oil layer might limit or eliminate natural atmospheric oxygen transport into the water. With time, if not removed, oxygen depletion in the waterway may be sufficient to cause a fish kill or create an anaerobic environment.

SECTION 13. DISPOSAL CONSIDERATIONS

Hazard characteristic and regulatory waste stream classification can change with product use. Accordingly, it is the responsibility of the user to determine the proper storage, transportation, treatment and/or disposal methodologies for spent materials and residues at the time of disposition.

Conditions of use may cause this material to become a "hazardous waste", as defined by federal or state regulations. It is the responsibility of the user to determine if the material is a "hazardous waste" at the time of disposal. Transportation, treatment, storage, and disposal of waste material must be conducted in accordance with RCRA regulations (see 40 CFR 260 through 40 CFR 271). State and/or local regulations may be more restrictive. Contact your regional US EPA office for guidance concerning case specific disposal issues. Empty drums and pails retain residue. DO NOT pressurize, cut, weld, braze, solder, drill, grind, or expose this product's empty container to heat, flame, or other ignition sources. DO NOT attempt to clean it. Empty drums and pails should be drained completely, properly bunged or sealed, and promptly sent to a reconditioner.

SECTION 14. TRANSPORT INFORMATION

The shipping description below may not represent requirements for all modes of transportation, shipping methods or locations outside of the United States.

US DOT Status Not regulated by the U.S. Department of Transportation as a hazardous material.

Proper Shipping Name Not regulated.

Hazard Class Not regulated.

Packing Group Not applicable.

UN/NA Number Not regulated.

Reportable Quantity A Reportable Quantity (RQ) has not been established for this material.

Placard(s)

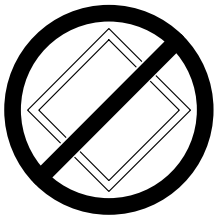

Emergency Response Guide No. Not applicable.

MARPOL III Status Not a DOT "Marine Pollutant" per 49 CFR 171.8.

Oil: The product(s) represented by this MSDS is (are) regulated as “oil” under 49 CFR Part 130. Shipments by rail or highway in packaging having a capacity of 3500 gallons or more or in a quantity greater 42,000 gallons are subject to these requirements. In addition, mixtures containing 10% or more of this product may be subject to these requirements.

SECTION 15. REGULATORY INFORMATION

TSCA Inventory This product and/or its components are listed on the Toxic Substances Control Act (TSCA) inventory.

SARA 302/304 Emergency Planning and Notification The Superfund Amendments and Reauthorization Act of 1986 (SARA) Title III requires facilities subject to Subparts 302 and 304 to submit emergency planning and notification information based on Threshold Planning Quantities (TPQs) and Reportable Quantities (RQs) for "Extremely Hazardous Substances" listed in 40 CFR 302.4 and 40 CFR 355. No components were identified.

SARA 311/312 Hazard Identification The Superfund Amendments and Reauthorization Act of 1986 (SARA) Title III requires facilities subject to this subpart to submit aggregate information on chemicals by "Hazard Category" as defined in 40 CFR 370.2. This material would be classified under the following hazard categories:

No SARA 311/312 hazard categories identified.

SARA 313 Toxic Chemical Notification and Release Reporting This product contains the following components in concentrations above *de minimis* levels that are listed as toxic chemicals in 40 CFR Part 372 pursuant to the requirements of Section 313 of SARA: No components were identified.

CERCLA The Comprehensive Environmental Response, Compensation, and Liability Act of 1980 (CERCLA) requires notification of the National Response Center concerning release of quantities of "hazardous substances" equal to or greater than the reportable quantities (RQ's) listed in 40 CFR 302.4. As defined by CERCLA, the term "hazardous substance" does not include petroleum, including crude oil or any fraction thereof which is not otherwise specifically designated in 40 CFR 302.4. Chemical substances present in this product or refinery stream that may be subject to this statute are:
Antimony and Antimony Compounds, Concentration: <1%

Clean Water Act (CWA) This material is classified as an oil under Section 311 of the Clean Water Act (CWA) and the Oil Pollution Act of 1990 (OPA). Discharges or spills which produce a visible sheen on waters of the United States, their adjoining shorelines, or into conduits leading to surface waters must be reported to the EPA's National Response Center at (800) 424-8802.

California Proposition 65	This product is not known to contain any components for which the State of California has found to cause cancer, birth defects or other reproductive harm.
New Jersey Right-to-Know Label	Petroleum Oil
Additional Remarks	No additional regulatory remarks.

SECTION 16. OTHER INFORMATION

Refer to the top of Page 1 for the HMIS and NFPA Hazard Ratings for this product.

REVISION INFORMATION

Version Number	3.1
Revision Date	7/2/2009

ABBREVIATIONS

AP: Approximately	EQ: Equal	>: Greater Than	<: Less Than
NA: Not Applicable	ND: No Data	NE: Not Established	

ACGIH: American Conference of Governmental Industrial Hygienists

AIHA: American Industrial Hygiene Association

IARC: International Agency for Research on Cancer

NIOSH: National Institute of Occupational Safety and Health

NPCA: National Paint and Coating Manufacturers Association

EPA: US Environmental Protection Agency

HMIS: Hazardous Materials Information System

OSHA: Occupational Safety and Health Administration

NTP: National Toxicology Program

NFPA: National Fire Protection Association

DISCLAIMER OF LIABILITY

THE INFORMATION IN THIS MSDS WAS OBTAINED FROM SOURCES WHICH WE BELIEVE ARE RELIABLE. HOWEVER, THE INFORMATION IS PROVIDED WITHOUT ANY WARRANTY, EXPRESSED OR IMPLIED REGARDING ITS CORRECTNESS. SOME INFORMATION PRESENTED AND CONCLUSIONS DRAWN HEREIN ARE FROM SOURCES OTHER THAN DIRECT TEST DATA ON THE SUBSTANCE ITSELF. THIS MSDS WAS PREPARED AND IS TO BE USED ONLY FOR THIS PRODUCT. IF THE PRODUCT IS USED AS A COMPONENT IN ANOTHER PRODUCT, THIS MSDS INFORMATION MAY NOT BE APPLICABLE. USERS SHOULD MAKE THEIR OWN INVESTIGATIONS TO DETERMINE THE SUITABILITY OF THE INFORMATION OR PRODUCTS FOR THEIR PARTICULAR PURPOSE.

THE CONDITIONS OR METHODS OF HANDLING, STORAGE, USE, AND DISPOSAL OF THE PRODUCT ARE BEYOND OUR CONTROL AND MAY BE BEYOND OUR KNOWLEDGE. FOR THIS AND OTHER REASONS, WE DO NOT ASSUME RESPONSIBILITY AND EXPRESSLY DISCLAIM LIABILITY FOR LOSS, DAMAGE OR EXPENSE ARISING OUT OF OR IN ANY WAY CONNECTED WITH HANDLING, STORAGE, USE OR DISPOSAL OF THE PRODUCT.

***** END OF MSDS *****

Nuvair
?949 West 5th St.
nard, CA 93030
.: 1-805-815-4044
Fax: 1-805-815-4196

Material Safety Data Sheet

Nuvair™ 751

Effective Date: 2/1/2000	Supercedes: 9/1/98

I. Product Identification:

Trade Name: Nuvair™751
Chemical Name: Diester/organic compound blend
Chemical Family: Ester

II. Components & Hazard Statement:

This product is non-hazardous. The product contains no known carcinogens. No special warning labels are required under OSHA CFR 1910.1200.

SARA TITLE 111 SECTION 313 (40 CFR PART 372): This product is not regulated under Section 313 and 40 CFR Part 372.

III. Physical Data:

Viscosity:	143 cst. @40°C
Specific Gravity (Water = 1.0):	0.96
›iling Point:	Not determined
por Pressure:	Negligible
Appearance & Odor:	Straw color – bland odor
Solubility in Water:	Negligible
Other Data:	Non-toxic USDA H-2 approved

IV. Fire & Explosion Hazard Data:

Flash point:	520°F COC ASTM D-92
Auto ignition Temperature:	765°F ASTM D-2155
Flammability Limits:	Not Established
Extinguishing Media:	Dry Chemical; CO2 Foam; Water Spray
Special Fire Fighting Procedure:	Burning may produce irritating/noxious fumes. Firefighters should use NIOSH/MNSA approved self-contained breathing apparatus. Use water to cool fire-exposed containers to prevent pressure build-up.

V. Reactivity Data:

Stability:	This product is stable and will not react with water.
Materials to Avoid:	Avoid strong oxidizers
Hazardous Decomposition Products:	Carbon monoxide, Carbon dioxide

VI. Health Information:

Eye Contact:	Flush eyes with water for 15 minutes. Call a physician if irritation develops.
Skin Contact:	Wash skin with soap and water.
alation:	Remove to fresh air.
estion:	First aid not normally required. If uncomfortable, call physician.

Effective Date: 2/1/2000	Supercedes: 9/1/98

Product Nuvair™751:

II. Health Hazard Data:

Exposure Limit:	Not Applicable
Effects of Overexposure:	Low oral and dermal toxicity. Prolonged or repeated exposure may cause irritation, nausea, and vomiting.

VIII. Employee Protection:

For general personal hygiene, wash hands thoroughly after handling material. Avoid contact with skin and eyes.
Chemical impervious gloves are not required, but may be recommended for prolonged exposure.
Use in a well ventilated area.

IX. Storage, Spill, & Disposal Procedures:

Storage:	Store in clean, dry area.
Spills:	Use absorbent materials to soak up fluid.
Disposal:	Incinerate this product and all associated wastes in a licensed facility in accordance with Federal, state, and local regulations.

X. Hazard Rating Information:

	NFPA	KEY	
Health:	1	4=Severe	0=Minimal
Flammability:	1	3=Serious	
Reactivity:	0	2=Moderate	B=Gloves, Goggles
Personal Protection:	B	1=Slight	

This information contained herein is based on the data available to us and is believed to be true and accurate. Nuvair makes no warranty, expressed or implied, regarding the accuracy of this data or the results to be obtained from the use thereof. Nuvair assumes no responsibility for injury from the use of this product.

For Additional Information:
Nuvair
2949 West 5th St.
Oxnard, CA 93030
Ph:1-805-815-4044
Fax: 1-805-815-4196
Website: www.nuvair.com
E-mail: info@nuvair.com

Royal Purple, Ltd.

Material Safety Data Sheet

Date Issued/Revised: May 21, 2002

I. Product Name: **Max-Gear®**
Chemical Family: Synthetic based lubricating oil
Use: Lubricant and corrosion inhibitor
Manufacturer: Royal Purple, Ltd.
Address: 1 Royal Purple Lane, Porter, Texas 77365 USA
Phone: 281-354-8600 Emergency Phone: 281-354-8600 Fax: 281-354-7600

II. Components:
- Base Oil (synthetic) — Synthetic additives with iso-paraffinic diluents.
- The precise composition of this oil is proprietary. A more complete disclosure will be provided to a physician or nurse in the event of a medical emergency.
- All components of this product are listed on the U.S. TSCA inventory.
- This product contains no hazardous substances within the definition of OSHA Regulation 29 CFR 1910.1200.
- Royal Purple certifies that this product has been evaluated for RCRA characteristics and does not meet the criteria of a hazardous waste if discarded in its purchased form.

III. Main Hazards / Health Effects:
Eyes: May cause irritation.
Inhalation: Oil mist may line breathing passages with oil making breathing difficult.
Ingestion: May cause diarrhea.
Skin: May irritate the skin after prolonged periods of contact.

IV. First Aid:
Eyes: Flush with water until all residual material is gone. If irritation persists, seek medical help.
Inhalation: Clear air passage. If respiratory difficulty continues, seek medical help.
Ingestion: Wash out mouth immediately. Do not induce vomiting. Consult physician.
Skin: Wash thoroughly with hand cleanser, followed by soap and water. Contaminated clothing should be dry cleaned before reuse.

V. Extinguishing Media:
Suitable: Foam, dry powder, Halon®, carbon dioxide, sand, earth and water mist.
Unsuitable: Water jet.
Protective Equipment for Fire Fighting: Self-contained breathing apparatus.

VI. Accidental Release Measures:
Personal Precautions: Wear gloves and protective overalls.
Environmental Precautions: Do not allow it to enter drains.
Spillage: Contain spill and keep from entering waterways. Absorb on porous material. Large quantities can be pumped.

VII. Handling and Storage:
Handling: No special handling precautions necessary.
Storage: Do not store at elevated temperatures.

VIII. Exposure Control / Personal Protection:
Respiratory Protection: Hydrocarbon absorbing respirator if misting.
Hand Protection: Oil-proof gloves for hypersensitive persons.
Eye Protection: Glasses, if applied to parts in motion.
Body Protection: Overalls.

IX. Physical and Chemical Properties:
Physical State: Liquid
Color: Purple
Odor: Lube Oil
pH: Neutral
Boiling Range / Point °F (°C): 650-800 (343-427)
Pour Point °F (°C): -40 (-40)
Flash Point (COC) °F (°C): >430 (>221)
Autoignition Temperature °F (°C): >600 (>315)
Evaporation Rate (Butyl Acetate): Negligible
Vapor Pressure (kPa): <0.1
Percent Volatiles: None
Density (g/cm³): >0.86
Flammability: Not flammable at ambient temp.
OAR Value: UN
Oxidizing Properties: None
Water Soluability: Insoluable
Vapor Density: Greater than air

X. Stability and Reactivity:

Stability: Chemically stable under normal conditions. No photoreactive agents.
Conditions to Avoid: Powerful sources of ignition and extreme temperatures.
Materials to Avoid: Strong inorganic and organic acids, oxidizing agents.
Hazardous Decomposition Products: Burning generates smoke, airborne soot, hydrocarbons and oxides of carbon, sulfur and nitrogen. Residue mainly comprised of soot and mineral oxides.

XI. Toxicological Information:

Acute Toxicity: Not known
Irritancy-Skin: Very mild
Skin Sensitization: Not known
Subacute / Sub-chronic Toxicity: Not known
Genotoxicity: None known
Chronic Toxicity: None known

California Prop 65: N/A
Carcinogen: NTP: No
IARC: No
OSHA: No
EC Classification (67 / 548 / EEC): No
LC-50: >200mg/l - extrapolated from component data
LD-50: Not applicable

XII. Ecological Information:

Possible Effects: In extreme cases, may germinate oil fractions that could act as a marine pollutant. Occurrences of this nature are highly unlikely.
Behavior: Relatively well behaved. Bioaccumulation potential nil.
Environmental Fate: Due to its fluid nature and specific gravity, this product will float or spread across water making it a nuisance contaminant. It is not thought to be toxic to marine or land organisms.

XIII. Waste and Container Disposal:

Waste Disposal: Consider recycling. This product, as sold, does not meet the RCRA characteristics of a hazardous waste. Under RCRA, it is the responsibility of the user, at the time of disposal, to determine whether the product meets the RCRA criteria for hazardous waste. Contact a waste disposal company or local authority for advice.
Container Disposal: See waste disposal section listed above.

XIV. Transport Information:

DOT: Nonhazardous
UN No.: N/A
DOT: Nonhazardous

Air Transport (ICAO, IATA): Bulk Nonhazardous
Sea Transport (IMO, IMDG): Bulk Nonhazardous
Road and Rail Transport (ADR / RID): Bulk Nonhazardous

XV. Regulatory Information:

Labeling Information: None needed
EC Annex 1 Class.: N/A
R Phrases: N/A
SARA 311 / 312: None
S Phrases: S-3 keep cool, S-16 keep away from ignition sources
Ozone Depleting Chemicals: N/A

CERCLA: Nonhazardous
TSCA: All components are listed
WHMIS (Canada): Not regulated
Canadian DSL: All components are listed
40 CFR Part 372 (SARA Section 313): N/A
RCRA Hazard Class: Nonhazardous
TSCA 12B Components: None

XVI. Other Information:

Signature:

Prepared By: A.J. Gustavsen, Ph.D.

Date Issued/Revised: May 21, 2002

of issue date, the information contained herein is accurate and reliable to the best of Royal Purple's knowledge. Royal Purple does not warrant or guarantee its accuracy or reliability and shall not be liable for any loss or damage arising out of the use thereof. It is the user's responsibility to satisfy itself that the information offered for its consideration is suitable for its particular use.

LEGEND

I. Identification of the Substance / Preparation and Company
II. Composition Information on Ingredients
III. Hazards Identification
IV. First Aid Measures
V. Fire Fighting Measures
VI. Accidental Release Measures
VII. Handling and Storage
VIII. Exposure Control / Personal Protection
IX. Physical and Chemical Properties
X. Stability and Reactivity
XI. Toxicological Information
XII. Ecological Information
XIII. Waste Disposal
XIV. Transport Information
XV. Regulatory Information
XVI. Other Information

NFPA SYMBOL

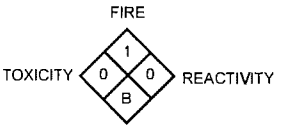

HMIS SYMBOL

HEALTH	0
FLAMMABILITY	1
REACTIVITY	0
PPI	B

Royal Purple, Ltd.

Material Safety Data Sheet

I.

Product Name: **Wire Rope Lubricant**

Date Issued/Revised: June 14, 2002

Chemical Family: Synthetic based lubricating oil
Use: Lubricant and corrosion inhibitor
Manufacturer: Royal Purple, Ltd.
Address: 1 Royal Purple Lane, Porter, Texas 77365 USA
Phone: 281-354-8600 Emergency Phone: 281-354-8600 Fax: 281-354-7600

II.

Components:

- Base Oil (synthetic with highly refined mineral oil) — Synthetic additives with iso-paraffinic diluents.
- The precise composition of this oil is proprietary. A more complete disclosure will be provided to a physician or nurse in the event of a medical emergency.
- All components of this product are listed on the U.S. TSCA inventory.
- This product contains no hazardous substances within the definition of OSHA Regulation 29 CFR 1910.1200.
- Royal Purple certifies that this product has been evaluated for RCRA characteristics and does not meet the criteria of a hazardous waste if discarded in its purchased form.

III.

Main Hazards / Health Effects:
Eyes: May cause irritation.
Inhalation: Oil mist may line breathing passages with oil making breathing difficult.
Ingestion: May cause diarrhea.
Skin: May irritate the skin after prolonged periods of contact.

IV.

First Aid:
Eyes: Flush with water until all residual material is gone. If irritation persists, seek medical help.
Inhalation: Clear air passage. If respiratory difficulty continues, seek medical help.
Ingestion: Wash out mouth immediately. Do not induce vomiting. Consult physician.
Skin: Wash thoroughly with hand cleanser, followed by soap and water. Contaminated clothing should be dry cleaned before reuse.

V.

Extinguishing Media:
Suitable: Foam, dry powder, Halon®, carbon dioxide, sand, earth and water mist.
Unsuitable: Water jet.
Protective Equipment for Fire Fighting: Self-contained breathing apparatus.

VI.

Accidental Release Measures:
Personal Precautions: Wear gloves and protective overalls.
Environmental Precautions: Do not allow it to enter drains.
Spillage: Contain spill and keep from entering waterways. Absorb on porous material. Large quantities can be pumped.

VII.

Handling and Storage:
Handling: No special handling precautions necessary.
Storage: Do not store at elevated temperatures.

VIII.

Exposure Control / Personal Protection:
Respiratory Protection: Hydrocarbon absorbing respirator if misting.
Hand Protection: Oil-proof gloves for hypersensitive persons.
Eye Protection: Glasses, if applied to parts in motion.
Body Protection: Overalls.

IX.

Physical and Chemical Properties:
Physical State: Liquid
Color: Purple
Odor: Mid Lube Oil
pH: Neutral
Boiling Range / Point °F (°C): Undetermined
Pour Point °F (°C): <0 (<-17.8)
Flash Point (COC) °F (°C): >450 (>232)
Autoignition Temperature °F (°C): >550 (>288)

Evaporation Rate (Butyl Acetate): <0.01
Vapor Pressure (kPa): <0.1
Percent Volatiles: None
Density (g/cm³): >0.89
Flammability: Not flammable at ambient temp.
OAR Value: UN
Oxidizing Properties: None
Water Solubility: Insoluble
Vapor Density: Greater than Air

X. Stability and Reactivity:

Stability: Chemically stable under normal conditions. No photoreactive agents.
Conditions to Avoid: Powerful sources of ignition and extreme temperatures.
Materials to Avoid: Strong inorganic and organic acids, oxidizing agents.
Hazardous Decomposition Products: Burning generates smoke, airborne soot, hydrocarbons and oxides of carbon, sulfur and nitrogen. Residue mainly comprised of soot and mineral oxides.

XI. Toxicological Information:

Acute Toxicity: Not known
Irritancy-Skin: Very mild
Skin Sensitization: Not known
Subacute / Sub-chronic Toxicity: Not known
Genotoxicity: None known
Chronic Toxicity: None known

California Prop 65: N/A
Carcinogen: NTP: No
IARC: No
OSHA: No
EC Classification (67 / 548 / EEC): No
LC-50: >2000mg/l - extrapolated from component data
LD-50: Not applicable

XII. Ecological Information:

Possible Effects: In extreme cases, may germinate oil fractions that could act as a marine pollutant. Occurrences of this nature are highly unlikely.
Behavior: Relatively well behaved. Bioaccumulation potential nil.
Environmental Fate: Due to its fluid nature and specific gravity, this product will float or spread across water making it a nuisance contaminant. It is not thought to be toxic to marine or land organisms.

XIII. Waste and Container Disposal:

Waste Disposal: Consider recycling. This product, as sold, does not meet the RCRA characteristics of a hazardous waste. Under RCRA, it is the responsibility of the user, at the time of disposal, to determine whether the product meets the RCRA criteria for hazardous waste. Contact a waste disposal company or local authority for advice.
Container Disposal: See waste disposal section listed above.

XIV. Transport Information:

DOT: Nonhazardous
UN No.: N/A
DOT: Nonhazardous

Air Transport (ICAO, IATA): Bulk Nonhazardous
Sea Transport (IMO, IMDG): Bulk Nonhazardous
Road and Rail Transport (ADR / RID): Bulk Nonhazardous

XV. Regulatory Information:

Labeling Information: None needed
EC Annex 1 Class.: N/A
R Phrases: N/A
SARA 311 / 312: None
S Phrases: S-3 keep cool, S-16 keep away from ignition sources
Ozone Depleting Chemicals: N/A

CERCLA: Nonhazardous
TSCA: All components are listed
WHMIS (Canada): Not regulated
Canadian DSL: All components are listed
40 CFR Part 372 (SARA Section 313): N/A
RCRA Hazard Class: Nonhazardous
TSCA 12B Components: None

XVI. Other Information:

Signature: A. J. Gustavsen

Prepared By: A. J. Gustavsen, Ph.D.

Date Issued/Revised: June 14, 2002

of issue date, the information contained herein is accurate and reli-
e to the best of Royal Purple's knowledge. Royal Purple does not warrant or guarantee its accuracy or reliability and shall not be liable for any loss or damage arising out of the use thereof. It is the user's responsibility to satisfy itself that the information offered for its consideration is suitable for its particular use

LEGEND

I.	Identification of the Substance / Preparation and Company
II.	Composition Information on Ingredients
III.	Hazards Identification
IV.	First Aid Measures
V.	Fire Fighting Measures
VI.	Accidental Release Measures
VII.	Handling and Storage
VIII.	Exposure Control / Personal Protection
IX.	Physical and Chemical Properties
X.	Stability and Reactivity
XI.	Toxicological Information
XII.	Ecological Information
XIII.	Waste Disposal
XIV.	Transport Information
XV.	Regulatory Information
XVI.	Other Information

NFPA SYMBOL

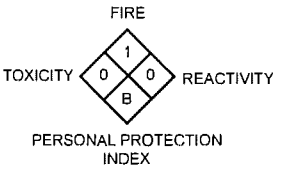

HMIS SYMBOL

HEALTH	0
FLAMMABILITY	1
REACTIVITY	0
PPI	B

APPENDIX D – FTHE COMPONENT MANUFACTURER LITERATURE

Support literature is provided for system components to include manufacturers' bulletins, catalogues, ordering/maintenance procedures, parts lists, and service instructions. Due to the large volume of component literature and ongoing product additions, updates/replacements, it was decided that this appendix be filed in separate 3-ring binder for ease of reference use.

Reference labels are attached to component literature and provide a drawing reference number and item number corresponding to that shown on the hydraulic/electrical schematic. Reference labels also include a part description, part number, along with the manufacturer company name, address and telephone number.

[This page intentionally left blank]

ATTACHMENT 1 – FTHE TEST PLANS

Attachment 1 was established to compile any pertinent tests for FTHE systems after receiving the equipment, as aids to maintain FTHE in a readiness state for DWT operations. Including these documents as part of the FTHE Operations and Maintenance Manual will provide a means of controlling them in the FTHE Configuration Management Plan.

FTHE Calibration Cruise Test Plan

The primary objective of the FTHE Calibration Cruise Test Plan is to validate FTHE system readiness just prior to DWT scheduled operations. A secondary objective is to provide opportunity for conducting operator training for the FTHE systems.

FTHE End-to-End Test Plan

The primary objective of the FTHE End-to-End Test Plan is to validate satisfactory system performance of Field Test Handling Equipment (FTHE) after any recent system maintenance, repairs, modifications, additions, or software upgrades. The End-to-End testing is performed just prior to a scheduled Calibration Cruise.

FTHE Smart Load Electronics Bottle Pressure Test

Naval Facilities Engineering Service Center (NFESC) was tasked with developing a Test Shape to be used to simulate Vehicle/Package during the Calibration Cruise. This system includes a One Atmosphere (1-atm) electronics bottle to house sensor interfaces, such as altimeter. This test plan was developed to evaluate the ability of the 1-atm bottle to operate in the deep ocean environment (high hydrostatic pressure in cold sea water).

[This page intentionally left blank]

CRUISE PLAN
CP#: 85012

FIELD TEST HANDLING EQUIPMENT CALIBRATION CRUISE

Naval Facilities Engineering Service Center
OCEAN ENGINEERING DIVISION
1100 23rd Avenue
Port Hueneme, CA
93043-4370

5 June 2008

TABLE OF CONTENTS

1.0 INTRODUCTION 2
1.1 BACKGROUND 2
1.2 OBJECTIVES 2
2.0 SITE DESCRIPTION 2
3.0 PERSONNEL AND RESPONSIBILITIES 3
3.1 PROJECT MANAGER 3
3.2 CRUISE LEADER 3
3.3 TEST DIRECTOR 3
3.4 DECK LEADER 3
3.5 SAFETY OBSERVER 4
3.6 ADDITIONAL PERSONNEL 4
4.0 OPERATIONS 4
4.1 OPERATIONS SUMMARY 4
4.2 DEVIATION AUTHORIZATION 4
4.3 SAFETY PRECAUTIONS 4
5.0 SCHEDULE SUMMARY 5
6.0 LOGISTICS 6
6.1 ENVIRONMENTAL COMPLIANCE 6
6.2 AREA CLEARANCE 6
6.3 NAVIGATION 6
6.4 SHIPBOARD COMMUNICATIONS 6
6.5 EMERGENCY COMMUNICATIONS 6
6.6 MOBILIZATION / DE-MOBILIZATION 7
6.7 HAZARDOUS MATERIALS 8
6.8 WEATHER TERMINATION 8
APPENDIX A - SAFETY PLAN A-1
APPENDIX B - EMERGENCY CONTACTS & COMMUNICATIONS LIST B-1
APPENDIX C - TEST PLAN C-1
APPENDIX D - ENVIRONMENTAL REVIEW DOCUMENT D-1
Attachment 1) FTHE Operation & Maintenance Manual, A128297-1, Chapters 9&10
Attachment 2) Spare Parts List [Shipboard deployment boxes SEA 1 & 2]

1.0 INTRODUCTION

1.1 BACKGROUND

The Field Test Handling Equipment (FTHE) was developed to provide support for the Deep Water Training (DWT) program. The ongoing support efforts include preparing the FTHE system to be sustained in a ready state for future at-sea operations. Periods of equipment inactivity and storage time are expected to be about a year between deployments. Therefore pre-cruise preparations need to include system calibration and integration tests to ensure operational readiness.

1.2 OBJECTIVES

The primary objective of this cruise is to validate satisfactory system performance of Field Test Handling Equipment after recent system modifications and software upgrade for fulfilling motion compensation requirements. A secondary objective is to provide opportunity for conducting operator training for the FTHE systems, with support from General Dynamics (GD) prior to FTHE system acceptance.

2.0 SITE DESCRIPTION

The FTHE test area shown in Figure 1 was chosen in an existing NFESC test site to support testing that involves interfacing with the seafloor. The seasonal oceanographic conditions are known for this site and it is in close proximity to Port Hueneme for conducting daily at-sea test operations. The test site is located about 14 nautical miles north-northwest of Santa Barbara Island, off the Southern California coast, at 33 deg 41.50’ N Latitude, 119 deg 10.00’ W Longitude.

The FTHE test area selected is also an area where NFESC has collected geotechnical data and has bathymetric survey data from the Naval Oceanographic Office (NAVO). The bottom sediment, at 740 ft depth, is classified as relatively uniform non-cohesive, non-plastic sand.

If the weather is bad or the Cruise Leader determines that an alternative location is desired for testing where seafloor interface is not required, operations may be conducted at a location between Port Hueneme and above stated site.

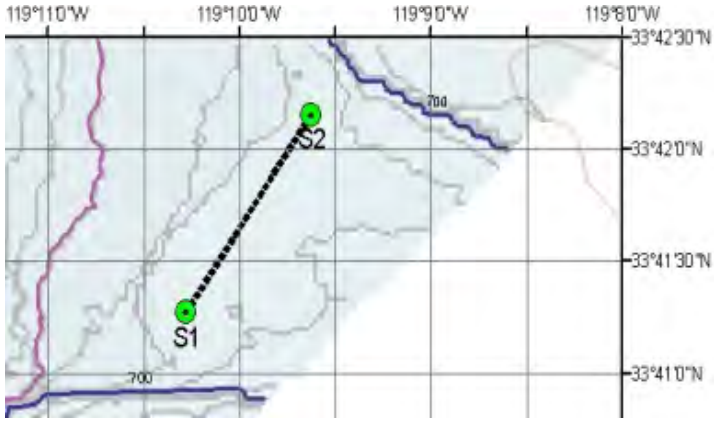

Figure 1 - FTHE Test Area Off Southern California Coast

3.0 PERSONNEL AND RESPONSIBILITIES

The following table lists personnel necessary for the project cruise operations.

Responsibility	Name	Organization	Telephone #
Project Manager / Cruise Leader	Tim Petro	NFESC	(805) 982-5577 Office (805) 345-6234 Cell
Assistant Cruise Leader	Jeff Kilpatrick	NFESC	(805) 982-1002 Office (805) 402-0250 Cell
Test Director	Doug Davis	GD	(413) 822-5969 Cell
Assistant Test Director	Dan Powell	GPA	(805) 407-9493 Cell
Deck Leader	Luke Morehouse	GPA	(805) 390-6877 Cell
Safety Observer	Vince Gerwe	GPA	(805) 901-8254 Cell
LARS Equipment Operator	Gary Standefer	GPA	(805) 377-3163 Cell
Control Van Operator	James Meza	NFESC	(818) 970-9825 Cell
Control Van Operator	David Liparoto	GPA	(805) 320-8885 Cell
Control Van - Software	Tom Harris	GD	(413) 494-4043
Control Van - Software	Mark Hauge	GD	(413) 494-5084

3.1 PROJECT MANAGER

The *Project Manager* (PM) will be responsible for all operations during the cruise, including supervising NFESC staff and contracted personnel. The PM will also be responsible for overseeing planning and development of the Cruise Plan.

3.2 CRUISE LEADER

The *Cruise Leader* has the primary responsibility of executing the cruise operations in a manner that places emphasis on safety. Both the Project Manager and the Cruise Leader assure the project operations are being performed in a manner consistent with the Safety Plan. The *Cruise Leader* will also assist the Safety Observer with investigations of any accidents and preparation of related reports.

3.3 TEST DIRECTOR

The *Test Director* has the primary responsibility of executing the Calibration Sea-Trial Test operations in a manner that places emphasis on safety. The Test Director is responsible for overseeing planning and development of the Test Plan. Both Project Manager and the Test Director assure the project operations are performed in a manner consistent with the Safety Plan.

3.4 DECK LEADER

The *Deck Leader* is responsible for directing all deck procedures, including equipment operations of the A-frame, crane, winches, etc. The Deck Leader is responsible for ensuring that deck operations are run safely within applicable regulations and has the duty to halt operations when hazardous conditions exist. Specific areas of responsibility for the Deck Leader include: review the Cruise Plan with Safety Plan, direct the deck operations with primary emphasis on

proper load handling procedures; and assist with investigations of accidents, to include preparation and review of reports involving deck operation safety issues.

3.5 SAFETY OBSERVER

The *Safety Observer* will observe all operational actions of personnel, equipment, and machinery in order to maintain a safe working environment. The Safety Observer has the primary responsibility to review operational procedures and to observe at-sea operations, with the primary focus on identifying unsafe conditions that may be unnoticed during the course of deck operations. If unsafe conditions are identified, the Safety Observer has responsibility to immediately stop operations and then bring these issues to the attention of the Cruise Leader and Deck Leader for appropriate corrective measures.

3.6 ADDITIONAL PERSONNEL

Additional personnel will be involved with operations including the following:

- Launch & Recovery Equipment Operators
- Control Van Operators

Note: Personnel assigned with cruise technician duties shall be properly trained and qualified to use the equipment necessary to perform required operations. Service personnel supporting operations shall understand the specific components they work on, including: electrical, mechanical, and hydraulic, as well as basic service and repair procedures.

4.0 OPERATIONS

A brief description outlining operations to be performed on *M/V INDEPENDENCE* during the cruise is provided below. A detailed description of the Calibration Cruise Sea-Trial Test Plan may be reviewed in Appendix C.

4.1 OPERATIONS SUMMARY

- Vessel will depart Port Hueneme and transit to the FTHE Test Area.
- After arriving at test site, the Calibration Cruise Test operations may be commenced if conditions allow (calm seas, daylight, etc.).
- Upon conclusion of operations at test site, vessel will transit back to Port Hueneme and prepare for the following day's testing.
- The Cruise Leader may make changes to the operations listed above if it is deemed necessary during the cruise.

4.2 DEVIATION AUTHORIZATION

Deviations from approved plans or a change in specified operational procedures will not be made without concurrence from Project Manager / Cruise Leader.

4.3 SAFETY PRECAUTIONS

Safety precautions will be observed during all phases of the operations, as specified in Appendix A) *Safety Plan* and also in accordance with the latest issue of the Occupational Safety and Health Program Manual, NFESCINST 5100.11. All cruise personnel will attend a mandatory safety briefing conducted prior to the start of operations each day.

5.0 SCHEDULE SUMMARY

The Project Manager will host a Cruise Readiness Review meeting at least one month prior to commencement of mobilization. This cruise plan and supporting documentation will be presented and discussed for planning purposes. A Plan of Action and Milestone schedule will also be presented and reviewed by personnel.

Comprehensive logistics planning is essential for carrying out successful cruise operations. The purpose of this review meeting will be to coordinate personnel, materials, equipment, and facilities required for the FTHE Calibration Sea-Trial.

The FTHE Calibration Sea-Trial proposed schedule is summarized in Table 1.

Table 1: Cruise Schedule Summary

Date	Day	Start Time	Returning To Port in Evening?	Event	Location
June 9	Mon.	0700	N/A	Mobilize/Load-Out MV INDEPENDENCE Crane Support, both 300-ton and 170 ton	Wharf B, Port Hueneme Harbor
June 10	Tues.	0700	N/A	Mobilize/Load-Out MV INDEPENDENCE FTHE assembly, cable & hose interconnection	Wharf B, Port Hueneme Harbor
June 11	Wed.	0700	N/A	Pier-Side FTHE Testing FTHE interconnection and interface checks Umbilical Reeve to Heave Compensator	Wharf B, Port Hueneme Harbor
June 12	Thurs	0700	N/A	Pier-Side FTHE Testing (continued) A-Frame Luffing Test w/ Test Shape (40,000lb) Umbilical Reeve to A-Frame	Wharf B, Port Hueneme Harbor
June 13	Fri.	0700	N/A	Pier-Side FTHE Testing, Install Test Shape sensors & electronic bottle, interconnection checks	Wharf B, Port Hueneme Harbor
June 16	Mon.	0700	N/A	Pier-Side FTHE Testing, Test Shape Dunk Test for Sensor Checks	Wharf B, Port Hueneme Harbor
June 17	Tues.	0600	YES	Transit to the FTHE Test Site. Once on site, commence testing operations.	Port Hueneme; Off Shore
June 18	Wed.	0600	YES	Transit to the FTHE Test Site. Once on site, commence testing operations.	Port Hueneme; Off Shore
June 19	Thurs	0600	NO	Transit to the FTHE Test Site. Once on site, commence testing operations.	Port Hueneme; Off Shore
June 20	Fri.	0600	YES	FTHE Test Site - Continue testing operations. Transit back to Port Hueneme	Off Shore: Port Hueneme
June 23	Mon.	0600	NO	Transit to the FTHE Test Site. Once on site, commence testing operations.	Port Hueneme; Off Shore
June 24	Tues.	0600	YES	FTHE Test Site - Continue testing operations. Transit back to Port Hueneme	Off Shore; Port Hueneme
June 25	Wed.	0600	YES	Transit to the FTHE Test Site. Once on site, commence testing operations.	Port Hueneme; Off Shore
June 26	Thurs	0600	NO	Transit to the FTHE Test Site. Once on site, commence testing operations.	Port Hueneme; Off Shore
June 27	Fri.	0600	YES	FTHE Test Site - Continue testing operations. Transit back to Port Hueneme	Off Shore; Port Hueneme

6.0 LOGISTICS

6.1 ENVIRONMENTAL COMPLIANCE

The Naval Facilities Engineering Service Center is responsible for ensuring environmental compliance for all projects. An Environmental Review Document is provided in Appendix D.

6.2 AREA CLEARANCE

All operational sites are outside of restricted military operational areas. However, operations will be conducted within the Point Mugu Sea Test Range, which is a controlled area. While clearance is *not* required for operations within this range, positive communications with test range personnel must be established while in the area. Clearance for vessel operations will be obtained via U.S. Coast Guard. The vessel will display all appropriate lights and shapes.

Before entering the Point Mugu Sea Range, the vessel should contact the NAWC Plead Control for authorization, as intermittent missile testing may occur at various times. Vessel should contact Plead Control by phone (805) 989-8841 or on marine band channel 16 (156.80MHz) or channel 11 (156.55MHz).

6.3 NAVIGATION

The vessel is equipped with a Global Positioning System (GPS) for navigation. The accuracy of the GPS is approximately ±5 meters, and will be used for all navigation and positioning requirements.

Refer to the following NOAA Navigation Charts for navigation information:

#18720 - Point Dume to Purisima Point
#18725 - Port Hueneme to Santa Barbara
#18728 - Santa Cruz Island Channel
#18729 - Anacapa Passage

6.4 SHIPBOARD COMMUNICATIONS

The vessel will monitor marine band channel 16 in order to monitor emergency situations in the area and contact between civilian vessels with the Coast Guard.

Communication between the bridge and deck operations will be via portable UHF radios. There are no other special communications requirements.

6.5 EMERGENCY COMMUNICATIONS

At-sea emergency communications will be conducted from the project vessel(s) via marine band radio channel 16 (156.80MHz) to the local U.S. Coast Guard or via cellular telephone to the USCG [(800) 221-8724].

Emergency communications during mobilization and de-mobilization will be through the Naval Base Ventura County (NBVC) 911 emergency services.

See the Safety Plan and hazard analysis in Appendix A for further details regarding emergency plans.

Appendix B contains the Emergency Contact List for the cruise personnel, including personal and work phone numbers.

6.6 MOBILIZATION / DE-MOBILIZATION

Mobilization and de-mobilization of the vessel will be accomplished at Naval Base Ventura County (NBVC), Port Hueneme, CA. Mobilization will consist of loading all of the equipment and hardware to be used during this operation. The major offshore equipment includes: the FTHE A-Frame, winch/levelwind, heave compensator, hydraulic power unit, Test Shape, control van, deck control pedestal, 20' van, 20' berthing van, power distribution system, and 400KW generator. Figure 2 shows a deck layout of the major equipment.

Table 2: Mobilization Load-Out Equipment

Equipment	Qty	Comments
Truck Crane, 300-ton (*walking* capable)	1	Load Equipment from trucks onto M/V Indy
Truck Crane, 140-ton	1	Load Equipment from trucks onto M/V Indy
Man-Rated Lift Bucket for Crane	1	To remove lift shackles on top of A-Frame
Man-Lift	1	To support umbilical reeve to A-Frame
Forklift, 25K	1	Pier-Side load-out support
Portable Welding Equipment	1	Install major equipment on deck

Equipment listed in Table 2 is for *M/V INDEPENDENCE* Load-Out operations.

Detailed procedures for mobilization and demobilization of FTHE are listed in the *"FTHE Installation, Operation, and Maintenance Manual"* A128297, 12-12-2005. See Volume 2, Chapters 9 & 10 provided as Attachment 1.

The referenced document describes prerequisite activities, tools and test/support equipment, unpacking/unloading/inspecting operations, and installation procedures for the FTHE deck installation of the major units. It describes the electrical, hydraulic, and pneumatic considerations in this endeavor and lists various initial pressure settings/readings for the FTHE.

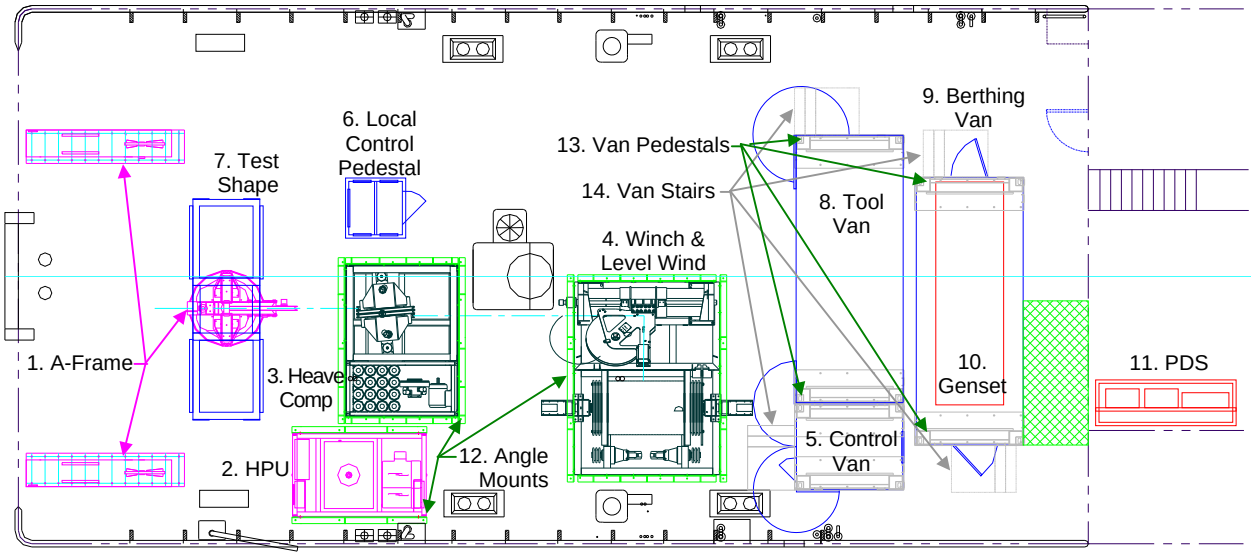

Figure 2 - *M/V INDEPENDENCE* Deck Layout

Major items required for mobilization onto the *M/V INDEPENDENCE* vessel are identified in Table 3, with equipment locations shown in Figure 2 Deck Layout.

Table 3 lists the FTHE components, item numbered to correspond to Figure 2.

Table 3: FTHE Offshore Component List

ITEM	EQUIPMENT	SIZE	WEIGHT
1.	A-Frame (with catwalk & braces)	142” L x 320” W	73,000 lbs
2.	Hydraulic Power Unit (HPU)	120” L x 75” W	13,000 lbs
3.	Heave Compensator (HC)	108” L x 75” W	36,000 lbs
4.	Umbilical Winch (UW) & Level Wind (LW)	130” L x 173” W	35,000 lbs (w/ umbilical)
5.	Control Van	95.5” L x 77” W	4,800 lbs
6.	Local Control Pedestal	54” L x 54” W	800 lbs
7.	Test Shape	197” L x 59” W	11,700 lbs (empty) 40,000 lbs (max)
8.	Tool Van (LVV)	240” L x 96” W	12,200 lbs
9.	Berthing Van (with ISO skid)	240” L x 96” W	28,000 lbs
10.	Genset (CAT Model XQ400-3456)	200” L x 61” W	15,000 lbs
11.	Power Distribution System (PDS)	126” L x 41” W	2,500 lbs
12.	Deck Angle Mounts	¾” x 6” x 6”	3,450 lbs
13.	Van Pedestals	98” L x 30” W	500 lbs/each
14.	Van Stairs	58” L x 36” W	200 lbs/each

See Appendix C – Test Plan, Section 5 Mobilization for further details. Also, a Spare Parts List that is packaged in Sea 1 & 2 boxes for load-out during at-sea operations is provided as Attachment 2.

6.7 HAZARDOUS MATERIALS

The tasks to be accomplished during this cruise may require the use of small amounts of common material defined as hazardous, such as lubricants, solvents, and paint. The inventory onboard the vessel of any such hazardous material will be kept to a bare minimum. Only the hazardous materials absolutely required to enable completion of the operation will be transported. All hazardous materials will be clearly marked and handled separately, in accordance with appropriate storage and handling procedures.

NBVC HAZMAT pick-up and storage may be arranged by calling (805) 982-3677.

6.8 WEATHER TERMINATION

Operations will be terminated if Sea State (SS) condition increases to a point where it may be unsafe to continue operations. Termination of operations will be at the discretion of the Vessel Master, with input from the Cruise Leader.

Weather conditions will be continuously monitored for the duration of the cruise. If poor weather conditions exist, a forecast will be obtained from local weather information sources. If weather is expected to worsen (>SS3), all equipment will be secured and the vessel will return to port.

Weather information for the area can be obtained from sources listed in Table 4.

Table 4: Area Weather Information Sources

Location / Authority	Frequency / Phone
NWS 24 hr Broadcasts	Marine Band Channel WX1 (162.400 MHz) WX2 (162.475 MHz) WX3 (162.550 MHz)
Point Mugu Weather Office Recording	(805) 989-8861

APPENDIX A - SAFETY PLAN

1.0 SAFETY PLAN INTRODUCTION

The safety precautions set forth in NFESCINST 5100.11J will be observed during all phases of these offshore operations. The personnel involved with this offshore operation will attend a mandatory safety briefing conducted on the vessel prior to the start of at-sea operations.

All members of the project team have an obligation to work in a safe manner at all times. Under normal operating conditions, the proposed project operations pose no electrical or mechanical hazards. However, some of the equipment involved operates with voltages that are potentially hazardous and major system components are heavy; therefore handling operations should be conducted with careful consideration of proper procedures.

Detailed descriptions of general safety principles, standard workshop practices, or service operations should be both understood and practiced by professional operational crew, and therefore are *not* contained in this safety plan. This safety plan does contain warnings and cautions about using specific service methods that could cause injury to personnel or damage equipment. The fact that no warnings or cautions are given for any specific service method does not mean that no safety risk is involved.

2.0 PERSONNEL RESPONSIBILITIES

Safety is the responsibility of all cruise personnel. Each and every member of the project team has the responsibility and authority to halt any operation they deem unsafe. Each person should monitor the condition of other personnel working with him or her, to ensure the safety of all concerned.

All personnel involved in cruise operations should review this safety plan; it is their responsibility to read all the precautions thoroughly before performing their respective tasks. If a procedural error or safety issue is discovered, operators and/or technicians should discontinue use of the procedure in question and notify the Safety Observer at once.

All personnel are responsible for their own safety protective equipment appropriate for each operation, including but not limited to: hard hats, steel-toe boots, work gloves, safety glasses, hearing protection, and work vests.

3.0 PRELIMINARY HAZARD ANALYSIS

3.1 HAZARD SEVERITY

A Preliminary Hazard Analysis (PHA) for each phase of the project execution is based on Hazard Severity. An assessment of the worst potential consequence is defined by the degree of injury, occupational illness, or an environmental release, which could conceivably occur. Hazard Severity categories are identified by Roman numerals and defined as follows:

Category I – Catastrophic: The hazard may cause death or release of a hazardous material at its reportable quantity, or loss/contamination of a facility.

Category II – Critical: May cause severe injury, or release of a hazardous material, or major contamination (property damage).

Category III – Marginal: May cause minor injury, or release of a hazardous material within the confines of a facility's boundaries, such as a ship, or minor contamination (property damage).

Category IV – Negligible: Probably would not affect personnel safety or health, or release of a hazardous material within a confined location.

3.2 MISHAP PROBABILITY

The probability that a hazard will result in a mishap is based on an assessment of such factors as location, exposure in terms of cycle or hours of operation, and affected population. Mishap Probability is assigned an Arabic letter according to the following criteria:

Subcategory A – Likely to occur immediately or within a short period of time

Subcategory B – Probably will occur in time

Subcategory C – May occur in time

Subcategory D – Unlikely to occur

3.3 RISK ASSESSMENT CODE (RAC)

The Risk Assessment Code is an expression of risk and combines the elements of Hazard Severity and Mishap Probability. The RAC is expressed as a single number that can be used to help determine hazard abatement priorities. RAC Codes are provided in Table A-1. Projects given a RAC of 1 or 2 shall undergo further system safety evaluation and analysis. In all cases, hazards identified in the hazard analysis shall be eliminated or controlled.

Table A-1: Risk Assessment Codes

HAZARD SEVERITY	MISHAP PROBABILITY			
	Subcategory A	Subcategory B	Subcategory C	Subcategory D
Category I	1	1	2	3
Category II	1	2	3	4
Category III	2	3	4	5
Category IV	5	5	5	5

Tables A-2 & A-3 contain a list of general hazards to vessel offshore operations, including the Hazard Severity, Mishap Probability, and RAC ratings. Applicable control measures and special work practices are briefly described to prevent or mitigate potential hazards from occurring.

Table A-2: General Shipboard Operations

Hazard	Triggering Event	Hazard Severity	Mishap of Probability	RAC
1) Drowning	Man overboard	I	D	3
Control Measures	**Applicable SOP's**	**Special Work Practices**		**HAZMAT**
a) Ensure all personnel on support vessel can swim.	N/A	a) Review man overboard procedures during safety meeting. b) Wear USCG approved floatation work vests on deck. c) Insure life rings are available. d) Watch for trip hazard on deck. e) Have recovery skiff standing by.		N/A

Table A-3: Vessel Lifting & Line Handling Operations

Hazard	Triggering Event	Hazard Severity	Mishap of Probability	RAC
1) Injury from rigging, lifting and hoisting	Hoisting and lifting operations	II	C	3
Control Measures	**Applicable SOP's**	**Special Work Practices**		**HAZMAT**
a) Ensure operators are trained to use hoisting and lifting equipment. b) Use load tested and certified rigging hardware per P-307	a) Applicable Weight Handling Equipment Operating Manuals	a) Wear personal safety equipment (hard hats, gloves, and eye/ear protection). b) Use defined hand signals. c) Watch for pinch points under revolving sheaves, underneath loads, between swinging loads & vessels. d) Use tag lines to control load while lifting. e) Personnel stay clear of suspended loads and deck winch wires.		N/A

Table A-4 contains a list of hazards unique to the offshore operations required for this particular project, including the Hazard Severity, Mishap Probability, and Risk Assessment Code (RAC) ratings.

Table A-4 Hazards Unique to This Project's Offshore Operations

EVENT DESCRIPTION	HAZARD SEVERITY	MISHAP PROBABILITY	RAC
Equipment becomes unsecured on vessel deck	III	C	4
Crane failure w/personnel beneath load	I	D	3
A-frame failure w/personnel beneath load	I	D	3
Parting line or lifting cable	I	D	3
Premature release of project hardware on deck	II	D	4
Deck work (man overboard)	II	C	3
Deterioration of weather	II	D	4
Personnel caught in cable or line bite	III	C	4

The "Special Safety Precautions" section in this Appendix contains procedures that shall be followed to reduce the potential risks associated with these particular offshore operations.

4.0 MEDICAL SURVEILLANCE AND TRAINING

No special medical surveillance is deemed necessary for this cruise's operations. The *M/V INDEPENDENCE* has first responder trained personnel available.

5.0 HAZARDOUS WASTE OPERATIONS

No hazardous waste will be generated as a result of project operations.

6.0 INDUSTRIAL HYGEINE

No confined spaces will be occupied. Therefore, no air monitoring is required.

7.0 SITE CONTROL MEASURES

The Cruise Leader will be the central point of contact for project operations.

8.0 SPECIAL SAFETY PRECAUTIONS

The Safety Observer has full control of the safety aspects and his directions shall be heeded at all times. Some of the hazards typical to these operations are identified below. All personnel in the deck operations area shall be aware of them and avoid them.

- Watch for and avoid trip hazards or slip hazards from spilled oil
- Stand clear of all lines and wires (under tension or slack)
- Use proper lifting techniques for heavy objects
- Use proper lifting equipment for each lift
- Watch for and avoid swinging loads

- Stand clear of forklift operations and crane operations
- Be cautious around high pressure hydraulic systems
- Be extraordinarily alert when working near a platform edge
- Be aware of other personnel to prevent injury to them

8.1 EQUIPMENT AND MACHINERY

Only vessel crewmembers will be allowed to operate the vessel equipment.

Personnel shall not operate unfamiliar equipment or machinery. Any person may stop any movement or operation of machinery or equipment at any time in order to prevent bodily harm and/or damage to that machinery or equipment.

8.2 HEAVY LIFT MACHINERY

Only qualified personnel will operate heavy lift machinery. Operations that include heavy lift equipment are inherently hazardous. Vessel personnel and technicians operate under these conditions on a regular basis and have developed procedures to minimize risk. Cruise observers and data collectors are not as seasoned for these conditions; therefore, they should exercise extreme caution to avoid hazardous conditions and to keep clear of ongoing operations.

8.3 OPERATIONAL CONSIDERATIONS

Inadvertent Movement of Project Hardware on Deck. All hardware will be securely tied/welded down prior to the start of operations.

A-Frame/Winch/Heave Comp Operations. All A-Frame/Winch/Heave Comp operations will be conducted only by properly trained and qualified personnel.

Tensioned Lines. Tensioned lines will be monitored by the Safety Observer and Deck Leader. Project personnel will be directed to not stand near any lines or cables under tension.

Line Bights. Slack lines that are being utilized will be monitored by the Safety Observer and Deck Leader. Project personnel will be directed to not stand near any working line, especially not in the bight of any line that is being used.

Crane Operations (*M/V INDEPENDENCE*). The vessel's crane will be fully functional at the start of operations. It is possible that a failure with the crane could occur, but all project personnel will be directed to ***not*** go beneath the crane or load during crane operations. Also, no unnecessary personnel will be present on the back deck of the vessel when crane operations are in progress. All crane operations will be directed by *M/V INDEPENDENCE* personnel. All personnel required on the deck, at the direction of the *M/V INDEPENDENCE*, will wear hard-hats, safety shoes, and buoyant safety vests. The designated Safety Observer and Deck Leader will observe the crane and surrounding area during lifts. Finally, the loads that the crane will be moving for this project's operations are well below the safe working lift capability of the crane.

A-Frame Operations. The A-frame will be fully functional at start of operations. It is possible that a failure with the A-frame could occur, but all personnel will be directed to ***not*** go beneath the A-frame or load that the A-frame is moving. No unnecessary personnel will be present near the A-frame when operations are in

progress. All A-frame operations will be directed by Deck Leader. Loads that the A-frame will be lifting are well below the A-frame's safe working lift capability.

Deck Work. All personnel near the back deck of any of the vessels, or any other areas unprotected with bulwarks, are required to wear U.S. Coast Guard approved buoyant safety work vests or float coats.

Weather. Offshore operations will not commence until sea states are at a safe level. Weather will be monitored daily. In the event that conditions do not allow the start of operations on a particular day, the support vessel will remain in port on standby. If the weather deteriorates while offshore to the point that operations must be called off, the support vessel will return to port, or if necessary the nearest safe port, to wait for conditions to become suitable.

9.0 VESSEL SAFETY PRECAUTIONS

9.1 GENERAL PRECAUTIONS

The Vessel Master shall instruct all cruise personnel in the vessel's specific safety instructions prior to departure. Vessel safety instructions will include, but not be limited to: fire and abandon ship procedures; location and use of lifeboats, survival suits, and lifejackets.

The Cruise Leader will take attendance of personnel required for upcoming operations and check that all needed equipment is prepared. If there are not sufficient personnel available and/or if any piece of equipment is inoperable that would prevent the operation from being performed safely, then operations will be delayed until properly resourced.

The Deck Leader will brief the gathered operational personnel on procedures to be accomplished during each operation task to follow. Operational participants should acknowledge an understanding of their respective responsibilities.

The Safety Observer shall give a Safety Brief to all personnel prior to initial operations. Issue(s) brought up during briefing that is not specifically addressed in this safety plan shall be discussed and resolved to ensure safe operations.

The Safety Observer shall ensure all safety procedures and precautions are followed during project operations.

9.2 ACCIDENT RESPONSE

Accident Report forms will be available at the offshore work site. This form shall be completed for any incidence involving personnel injury while performing project related duties. All accidents or incidents that result in an occupational injury, illness and/or property damage shall be investigated.

A first-aid kit will be made available on the vessel at all times. The contents will be checked and restocked regularly by the ship's crew.

Personnel injuries shall be reported to the Safety Observer as soon as they happen and first-aid treatment immediately applied. Available personnel trained in first aid will treat injuries as best as possible, evaluating if nature of the injury may require medical emergency response.

9.3 MEDICAL EMERGENCY RESPONSE

In the event of a medical emergency aboard the vessel, the vessel Captain will be responsible for communications at the site, including air evacuations. The emergency radio channel is marine band channel 16 (156.80MHz).

The following are response steps to be taken in case of a medical emergency:

Call the local U.S. Coast Guard for assistance [Marine Band CH 16 (156.80MHz) or telephone (800) 221-8724]. Depending upon the location of the nearest USCG vessel or helicopter, and the nature of the injury, the USCG may direct project personnel to transport the injured person from the project site to Port Hueneme, or to another vessel. Vessel has a small support boat for rapid evacuation of personnel, if deemed practical.

Notify NFESC of the emergency immediately after contacting the USCG. If the USCG will handle the situation, then the call to NFESC will be informational to keep managers apprised of the situation.

Arrange victim transportation from shore landing to the nearest medical facility, or transport victim via helicopter directly to appropriate medical facility. The helicopter companies closest to the operation site are USCG search and rescue, and MercyAir Air dispatch: (800) 222-3456.

Local Medical Facilities

Nearest Aid Station: M/V *INDEPENDENCE* Medical Bay

San Nicolas Island Medical Clinic: (805) 989-2357 / 989-8030

NBVC Medical Clinic: NBVC Naval Ambulatory Care Center
162 First Street, Port Hueneme, CA
(805) 982-6370

9.4 VESSEL FIRE

Fire alarm notice will be passed on the vessel. Crewmembers are trained in basic fire extinguishing techniques and the vessel will carry U.S. Coast Guard required fire fighting equipment. Project participants will be notified of what to do in the case of a fire during the mandatory safety briefings.

9.5 MAN OVERBOARD

Project participants will be notified at the mandatory safety briefings of what procedures they should follow in the case of a person inadvertently entering the water from a vessel. In summary, the following steps will be taken:

- Yell “MAN OVERBOARD” and notify the deck leader and safety officer.
- Personnel seeing the “man overboard” continuously points at the person and keeps track of the victim’s location.
- The deck leader and safety officer immediately inform the operator of the vessel.
- Propulsion of the vessel is stopped and the vessel signals man overboard by six short blasts on the vessel’s whistle, repeated several times. Alternatively, vessel personnel are notified of the “man overboard” emergency by PA (public address) system and/or word of mouth.

- A life ring is thrown to the person in the water.
- If necessary, a small boat is dispatched to recover the person.
- Medical procedures will be followed as appropriate.

9.6 OIL SPILL RESPONSE

If an oil spill occurs, responsible personnel will take immediate action to:

1) Stop the flow of product – stop transfers, secure pumps, close valves;

2) Warn personnel – sound alarms, enforce safety and security actions;

3) Shut off ignition sources – motors, electric circuits, open flames;

4) Initiate containment – block drains, deploy absorbents or boom; and

5) Make notifications – inform supervisors and managers.

All spills are considered to be an emergency whether or not there is potential life, health, fire or other safety hazards.

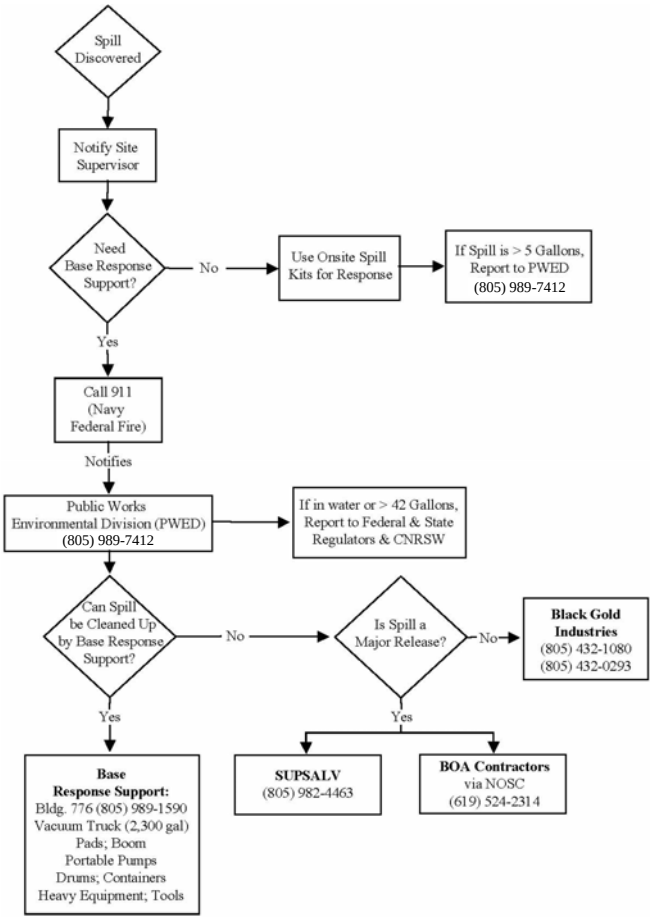

Fuels operators, public works personnel, security personnel, safety personnel, and port operations personnel with the fire department, serve as the **First Response Team** (**FRT**) and are the initial responders to a spill. The **FRT** will clean up a spill if it is within its capabilities to do so.

Other Navy spill response resources will be called to assist in clean up of larger spills and those migrating off the base.

The **NBVC Fire Department (805) 982-4352** shall be notified immediately of spills that are greater than five gallons, enter any drain, contaminate soil or are beyond the capability of the activity to handle.

Public Works Naval Base Ventura County
(805) 989-8501 (Office) or 24-hour: (805) 989-7209

If at sea, then call the **U.S. Coast Guard - Oil Spill Response (800) 424-8802**.

SAFETY PLAN SIGN-OFF SHEET

(Submit to ESC092 upon completion)

The following personnel have read and understand the Cruise Plan and Safety Plan for conducting the intended operation, and have attended the pre-operation safety meeting.

Project Manager	Date	Cruise Leader	Date
Deck Leader	Date	Safety Observer	Date

APPENDIX B - EMERGENCY CONTACTS & COMMUNICATIONS LIST

Project area emergency contacts and communication lists are provided in Table B-1. The project team's personnel and work contacts are listed in Table B-2 & B-3.

Table B-1: Project Area Emergency Contacts and Communications List

Location / Point of Contact	Phone Number / Radio Frequency
CBC PORT HUENEME	
Emergency Response	911 (primary)
CBC Fire Department	(805) 982-4352
Port Operations	(805) 982-3938 / 982-3122
NFESC Safety Officer: Robin Skinner	(805) 982-1136
HAZMAT (pick-up & storage)	(805) 982-3677
NFESC Dive Locker	(805) 982-5207 / 982-5212
VESSEL	
M/V INDEPENDENCE	(805) 982-4272; Cell (805) 889-3641; INMARSAT: 011-872764636532
OFFSHORE	
U.S. Coast Guard Emergency Response	VHF Ch 16 (156.80 MHz), Ch 22 (157.10 MHz) HF 2182 kHz Phone: (800) 221-8724 ext. 1 / (301) 732-2043
National Oil Spill Response Center	(800) 424-8802
International Distress	VHF 121.5 MHz
Military Distress	VHF 243.3 MHz
Hyperbaric Chamber (Catalina Island)	(310) 510-4020 (8am – 5pm) (310) 510-1053 (24hr)
NAWC POINT MUGU	
Range Communication: Chris Ironhill	(805) 989-0924
Plead Control Range Surveillance	VHF Ch 16 (156.80 MHz) or Ch 11 (156.55 MHz) HF 5080 kHz / 3237 kHz Phone: (805) 989-8841
SAN NICOLAS ISLAND	
Range Coordinator: Jeff Chilton	(805) 989-2393 / 989-8008
San Nicolas Island Medical Emergency	(805) 989-2357 / 989-8030 VHF Ch 1 (156.05 MHz)
San Nicolas Island Security	(805) 989-2394
San Nicolas Island HAZMAT	(805) 989-2142
CONTRACTORS	
GPA Technologies, Inc.	David Liparoto (805) 643-7878 Office (805) 320-8885Cell
OST Trucks and Cranes	(805) 643-9963

Table B-2: Personnel Emergency Contact List

Personnel	Emergency Contact	Phone Number
Tim Petro	Greg Petro	(805) 345-6233
Jeff Kilpatrick	Wednesday Kilpatrick	(805) 642-2399 Home (805) 746-2529 Work
James Meza	Susana Salguero	(818) 903-4298
Luke Morehouse	Jessie or Sandy McNolty	(805) 982-1119 (805) 933-0317
Vince Gerwe	Kathy Gerwe	(805) 650-6233 Home (805) 794-3868 Work
Gary Standefer	Sherree Standefer	(805) 639-0545 Home (805) 312-4231 Cell
Dan Powell	Cynthia Powell	(805) 644-7086 Home (805) 407-9553 Cell
David Liparoto	Blayne Liparoto	(805) 650-9047 Home (805) 340-6864 Cell
Doug Davis	Kathy Davis	(413) 232-7784 Home (413) 822-0360 Cell
Tom Harris	Janice Harris	(413) 445-2474 Home (413) 441-9224 Cell
Mark Hauge		

Table B-3 Employer's Emergency Contact List

NFESC PERSONNEL		
Bob Frederickson, ESC51 Division Director		(805) 982-1163 Office
CONTRACTORS		
GPA Technologies, Inc.	Michael Vaswani, President	(805) 643-7878 Office
General Dynamics	Kurt Longevin	(413) 441-5531

[This page intentionally left blank]

Appendix C - Test Plan

FTHE CALIBRATION CRUISE TEST

TABLE OF CONTENTS

1.0 INTRODUCTION 4
1.1 OBJECTIVE 4
1.2 GENERAL INFORMATION 4
1.3 SAFETY AWARENESS 4
2.0 REFERENCES 5
3.0 TEST PREREQUISITES 5
4.0 CALIBRATION SEA-TRAIL TEST PLAN OVERVIEW 5
5.0 MOBILIZATION 6
5.1 MOBILIZATION LOAD-OUT EQUIPMENT & DECK LAYOUT 6
5.2 MOBILIZATION TOOLS AND TEST SUPPORT EQUIPMENT 7
5.3 FASTENERS & SPECIFICATIONS REQUIRED FOR DECK INSTALLATION 7
5.4 ELECTRICAL INTERCONNECTION HOOK-UPS 8
5.5 PNEUMATIC INTERCONNECTION HOOK-UPS 13
5.6 HYDRAULIC INTERCONNECTION HOOK-UPS 18
5.7 COOLING WATER INTERCONNECTION HOOK-UPS 22
5.8 HEAVE COMPENSATOR UMBILICAL REEVE 23
5.9 FTHE START-UP & SHUT-DOWN PROCEDURES 25
6.0 FTHE FUNCTIONAL TESTS 33
6.1 CONTROLS AND INDICATORS FUNCTIONAL VERIFICATION 33
6.2 HYDRAULIC POWER UNIT PRESSURE SETTINGS VERIFICATION 36
6.3 LARS (A-FRAME, UMBILICAL WINCH, LEVELWIND) TESTS 38
6.4 HEAVE COMPENSATOR TESTS 41
6.5 TEST SHAPE CONTROL TESTS 44

LIST OF TABLES

Table 1: FTHE Offshore Component List 6
Table 2: Tools and Test Support Equipment 7
Table 3: Fasteners & Specifications for Deck Installation 8
Table 4: FTHE Electrical Enclosure Labels and Locations 9
Table 5: FTHE Electrical Cable Connections 10
Table 6: Electronics Cabinet Subassembly Cable Connections 12
Table 7: HC Gas Reclamation Nitrogen Hose Connections 15
Table 8: Boost Accumulator Gas Pressure Charge for A-Frame Load Range 16
Table 9: A-Frame Hydraulic Hose Interconnection 19
Table 10: Umbilical Winch / Levelwind Hydraulic Interconnection 20
Table 11: FTHE Upper Case Drain Locations 20
Table 12: Cooling Water Hose Connections 22
Table 13: FTHE Prestart Inspection Sheets (Unpowered) 25
Table 14: FTHE System Power-Up Procedures 29
Table 15: FTHE System Post Power-Up Inspection Sheet 31
Table 16: FTHE System Shut-Down Procedures 32
Table 17: HC System Nominal Relief Pressure Settings 41
Table 18: LCI-90 Tension Reading vs. HC System Accumulator Gas Pressure 41
Table 19: HC Passive Functional Test Results 42
Table 20: Datalog Control Sheet for Docking Head Tension Control 43
Table 21: Datalog Control Sheet for Test Shape (ROV) Tension Control 45
Table 22: Datalog Control Sheet for Test Shape (ROV) Altitude Control 48
Table 23: Datalog Control Sheet for Test Shape (ROV) Bottom Keeping Control 50

LIST OF FIGURES

Figure 1: *M/V INDEPENDENCE* Deck Layout 6
Figure 2: FTHE Electrical Cable Paths & Connection Locations 10
Figure 3: HC Gas Bottle Rack 14
Figure 4: FTHE Hydraulic Hose Paths & Connection Locations 19
Figure 5: HC Lower Head Assembly 23
Figure 6: HC Flying Head Assembly - Top View 24
Figure 7: LCI-90 Tension Reading vs. HC Accumulator Gas Pressure 41

ACRONYMS AND ABBREVIATIONS

Acronyms and abbreviations used in the test plan are listed as follows.

ACRONYM OR ABBREVIATION	DEFINITION
AC	Accelerometer
ACC	Accumulator
AF	A-Frame
BV	Ball Valve
CBV	Counterbalance Valve
COMP	Compensator
COND.	Conductor
CVP	Control Van Panel
CYL	Cylinder
DAQ	Data Acquisition
DCV	Directional Control Valve (“DCV Station” -> A-Frame Local Control)
DD	Dynacon Drawing
DH	Docking Head
DWG	Drawing
DWT	Deep Water Training
ENC	Enclosure
FAT	Factory Acceptance Test
FL	Filter
FTHE	Field Test Handling Equipment
GB	Gas Bottle (Nitrogen cylinder)
GMB	Gear Motor Box
GUI	Graphical User Interface
HC	Heave Compensator
HDR	Header
HPU	Hydraulic Power Unit
JB or J-Box	Junction Box
LARS	Launch and Recovery System
LG	Liquid Gauge
LW	Levelwind or Level Wind
MSDS	Material Safety Data Sheet
NEMA	National Electrical Manufacturers Association (Standard reference)
NFESC	Naval Facilities Engineering Service Center
NI	National Instruments
PCB	Printed Circuit Board
PDS	Power Distribution System
PPE	Personal Protective Equipment
SC	Signal Conditioner
SWL	Safe Working Load
TB	Terminal Board
UPS	Uninterruptible Power Supply
UW	Umbilical Winch

FTHE CALIBRATION CRUISE TEST PLAN

1.0 INTRODUCTION

1.1 OBJECTIVE

The primary objective of this FTHE Calibration Cruise Test Plan is to validate satisfactory system performance of Field Test Handling Equipment (FTHE) after recent system modifications and software upgrade for fulfilling motion compensation requirements.

A secondary objective is to provide opportunity for conducting operator training for the FTHE systems, with support from equipment OEM personnel prior to FTHE system acceptance.

1.2 GENERAL INFORMATION

The following test procedures were written with the assumption that the technicians who will be operating equipment possess prior experience in the use of umbilical handling systems and thereby have a basic understanding of hydraulic and electrical systems.

A description of the electrical, hydraulic, and pneumatic considerations for mobilization are provided, as well as inspection lists for start-up and shut-down of the FTHE. Also provided are lists of recommended parts and specifications required for deck installation.

1.3 SAFETY AWARENESS

Safety is the responsibility of all personnel involved in the testing. The safety precautions set forth in NFESCINST 5100.11J as well as Appendix A Safety Plan will be observed during performance of these FTHE Calibration Sea-Trail Tests.

Major components are heavy and should be carefully handled. This test plan does not contain detailed descriptions of safety principles, standard workshop practices, or service operations. It does contain specific warnings and cautions about using specific service methods that could cause injury to personnel or damage equipment. The fact that no warnings or cautions are given for any specific service methods does not mean that there is not a safety risk involved.

This test document provides warnings, caution, and note prompts for safety awareness when deemed necessary due to a particular operation or situation. The following labels are used to identify potential hazards:

WARNINGS
Identify situations that are potentially hazardous or lethal to personnel.

CAUTIONS
Identify situations that are potentially hazardous to equipment or material.

NOTES are used to emphasize information provided in test or procedures.

2.0 REFERENCES

A) FTHE Installation, Operation, and Maintenance Manual, General Dynamics Document Number A128297, December 14, 2005

B) Factory Acceptance Test Procedures for the (FTHE) A-Frame System, Dynacon Document Number 0707-0009-01

C) Factory Acceptance Test Procedures for the (FTHE) Heave Comp. System, Dynacon Document Number 0707-0009-02

3.0 TEST PREREQUISITES

Prior to the FTHE Calibration Cruise, *"End-to-End"* testing was conducted that validated system modifications and upgrades were performed successfully. This testing also provided training for personnel to become familiar with the FTHE systems and operational procedures.

Additionally, software upgrades were developed to improve system performance and GD personnel will perform the following prior to mobilization:

- Installation of FTHE Control Software
- Conduct software checkout procedure to verify software operation

4.0 CALIBRATION SEA-TRAIL TEST PLAN OVERVIEW

The following provides a brief overview of the major test components that were developed from References A, B & C, along with End-to-End Test experience:

- Field Test Handling Equipment Mobilization
  - Load-Out Equipment & Deck Layout
  - Interconnection Hook-Ups
  - HC Gas Charging & Hydraulic Oil Replenishment
  - Umbilical Reeve
  - FTHE Start-Up & Shut-Down Procedures
- Controls and Indicators Functional Verification
- HPU Pressure Settings Verification
- LARS (Umbilical Winch, Levelwind, A-Frame) Tests
  - FTHE Manual Controls Functional Verification Test
  - A-Frame Docking Head Latch Test
  - A-Frame Assembly Luffing Test
- Heave Compensator Tests
  - HC Relief Valve Settings and Verification
  - Heave Compensator Functional Test
  - Docking Head Tension Control
- Test Shape Control Tests
  - Test Shape Tension Control
  - Test Shape Altitude Control
  - Test Shape Bottom Keeping Control

5.0 MOBILIZATION

Detailed procedures for mobilization of FTHE are listed in the *"FTHE Installation, Operation, and Maintenance Manual"* A128297, 12-12-2005. See Volume 2, Chapter 9 (provided as Attachment 1).

The referenced document describes prerequisite activities, tools and test/support equipment, unpacking/unloading/inspecting operations, and installation procedures for the FTHE deck installation of the major units. The *FTHE Installation, Operation, and Maintenance Manual* [Reference A)] should be reviewed for specific system troubleshooting, repair, and maintenance information.

Mobilization efforts specific to this Calibration Cruise are in following sections.

5.1 MOBILIZATION LOAD-OUT EQUIPMENT & DECK LAYOUT

Refer to Cruise Plan Section 6.6 Mobilization / De-Mobilization for the load-out support equipment list. The Deck Layout is repeated to assist reader review.

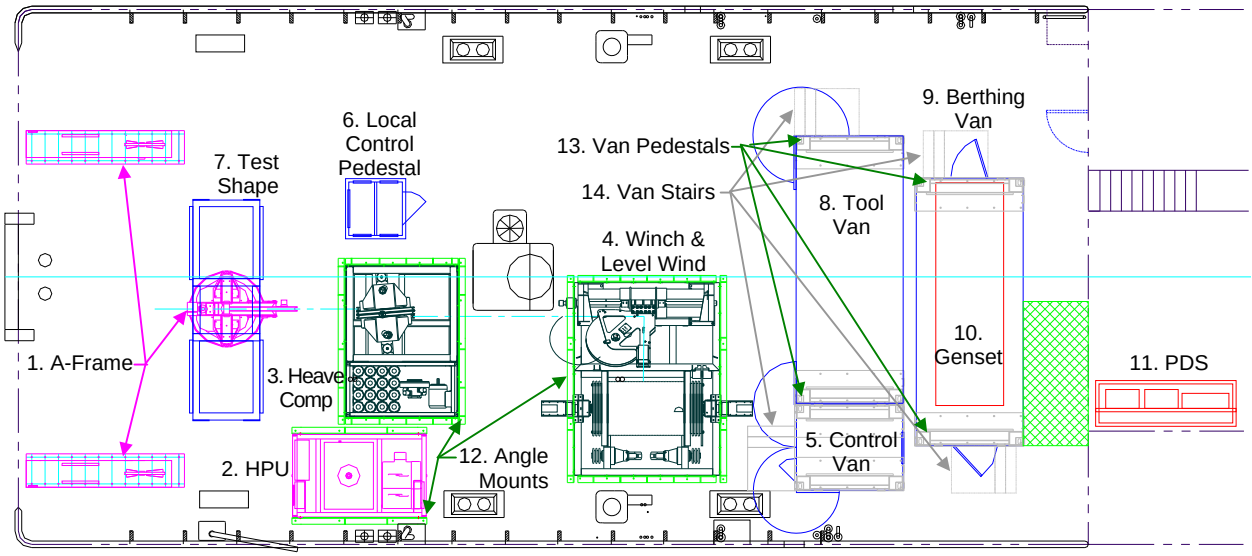

Figure 1: *M/V INDEPENDENCE* Deck Layout

Major items required for mobilization onto the *M/V INDEPENDENCE* vessel are identified in Table 1, with equipment locations shown in Figure 1 Deck Layout. Table 1 lists the FTHE components, item numbered to correspond to Figure 1.

Table 1: FTHE Offshore Component List

ITEM	EQUIPMENT	SIZE	WEIGHT (approx.)
1.	A-Frame (with catwalk & braces)	142" L x 320" W	73,000 lbs
2.	Hydraulic Power Unit (HPU)	120" L x 75" W	13,000 lbs
3.	Heave Compensator (HC)	108" L x 75" W	36,000 lbs
4.	Umbilical Winch (UW) & Level Wind (LW)	130" L x 173" W	35,000 lbs (w/ umbilical)
5.	Control Van	95.5" L x 77" W	4,800 lbs
6.	Local Control Pedestal	54" L x 54" W	800 lbs

7.	Test Shape	197” L x 59” W	11,700 lbs (empty) 40,000 lbs (max)
8.	Tool Van (LVV)	240” L x 96” W	12,200 lbs
9.	Berthing Van (with ISO skid)	240” L x 96” W	28,000 lbs
10.	Genset (CAT Model XQ400-3456)	200” L x 61” W	15,000 lbs
11.	Power Distribution System (PDS)	126” L x 41” W	2,500 lbs
12.	Deck Angle Mounts	¾” x 6” x 6”	3,450 lbs
13.	Van Pedestals	98” L x 30” W	500 lbs/each
14.	Van Stairs	58” L x 36” W	200 lbs/each

5.2 MOBILIZATION TOOLS AND TEST SUPPORT EQUIPMENT

A list of tools and test/support equipment required to perform troubleshooting, corrective maintenance, mobilization, and demobilization procedures for the FTHE is provided in Table 2. These tools are supplied with the FTHE and are identified to aid in the required maintenance of the FTHE. A Spare Parts List that is packaged in Sea 1 & 2 boxes for load-out during at-sea operations is provided as Attachment 2).

Table 2: Tools and Test Support Equipment

DESCRIPTION	MODIFIER	QUANTITY	PURPOSE
JTK®-93 Tool Kit	Electro-Mechanical Service Kit, Jenson Tools	1 Each	Maintenance
Adjustable Wrenches	Standard Style, 6", 12" and 24"	1 Each	Maintenance
Open End Wrench	Combination 15/16" x 1"	2 Each	Maintenance
Open End Wrench	Combination 1" x 1-1/8"	2 Each	Maintenance
Open End Wrench	Combination 1-1/16" x 1-1/4"	2 Each	Maintenance
Open End Wrench	Combination 1-5/16" x 1-1/2"	2 Each	Maintenance
Ratchet Web Assemblies	2-Piece Ratchet Web Assemblies w/Flat-Hook Ends, 5,000 lbs	4 Each	Secure Spare Parts Boxes
Digital Multimeter	3-1/2 Digit, True RMS, 1000 AC/DC Voltage, 10 A	1 Each	Maintenance
Temperature Label	Stick-on with 100 -200ºF range	2 Each	Calibration
Flash Light	Battery Operated	2 Each	Maintenance

5.3 FASTENERS & SPECIFICATIONS REQUIRED FOR DECK INSTALLATION

The required hardware and associated torque values to install the major FTHE offshore components to the deck are provided in Table 3.

Table 3: Fasteners & Specifications for Deck Installation

REQUIREMENT	LW TO UW	UW & LW TO BASE ANGLE	HPU TO BASE ANGLE	HC TO BASE ANGLE	N/A
Number of Hex Head Bolts	2	4	4	4	
No. of Hex Nuts	2	4	4	4	
No. of SS Lock Washers	2	4	4	4	
No. of SS Flat Washers	4	8	8	8	
Bolt Description (Zinc Coated Cap Screw)	1-8 UNC x 3-½ " Lg	1-8 UNC x 2-½ " Lg	1-8 UNC x 2-½ " Lg	1-8 UNC x 2-½ " Lg	
Fastener Material Grade	5 or Better	5 or Better	5 or Better	5 or Better	
Torque Level (Lubricated)	489 ft-lbs	489 ft-lbs	489 ft-lbs	489 ft-lbs	
REQUIREMENT	**N/A**	**UW & LW ANGLE TO DECK**	**HPU ANGLE TO DECK**	**HC ANGLE TO DECK**	**A-FRAME FOOT TO DECK**
Number of Hex Head Bolts		16	8	18	48 Total (24 Per Side)
No. of SS Lock Washers		16	8	18	48
No. of SS Flat Washers		16	8	18	48
Bolt Description (Zinc Coated Cap Screw)		1-8 UNC x 2-½ " Lg	1-8 UNC x 2-½ " Lg	1-8 UNC x 2-½ " Lg	1-8 UNC x 3-½ " Lg
Fastener Material Grade		5 or Better	5 or Better	5 or Better	Grade 8
Torque Level (Lubricated)		200 ft-lbs	200 ft-lbs	200 ft-lbs	489 ft-lbs

5.4 ELECTRICAL INTERCONNECTION HOOK-UPS

After the FTHE System is properly assembled and located per deck layout, the various interconnections (electrical, pneumatic, hydraulic, and cooling water) must be connected.

WARNING

Prior to startup of Umbilical Winch System, ensure all personnel remain clear of the Umbilical Winch & Levelwind Assembly and the umbilical cable path.

WARNING

Prior to placing the Control Van Panel (remote control station) in the enabled mode, ensure the Winch PAY-OUT/HAUL-IN joysticks at both the Pedestal (local control station) and Control Van Panel are in the **NEUTRAL** position.

CAUTION

Prior to operation of the Umbilical Winch System, all installation procedures, hydraulic connections, and electrical connections must be completed for the entire system.

CAUTION

After FTHE initial startup, verify that minimum acceptable hydraulic system pressure levels are reached.

NOTE: The Umbilical Winch System and operational functions may be stopped at any time by depressing the HPU STOP push button located on the Local Control Panel (Pedestal) or the Control Van Panel (remote control) or the HPU Assembly High Voltage Enclosure.

5.4.1 Electrical Considerations

Under normal operating conditions, the FTHE system poses no electrical hazards to personnel or equipment. However, the FTHE system does use voltages that are potentially lethal or hazardous should an accident or improper actions occur (See Appendix A - Safety Plan).

5.4.2 Electrical Connections

Electrical power cables for the FTHE System need to be laid out on the concrete apron and connected to their respective enclosures after FTHE installation. The FTHE electrical enclosures have been assigned short acronyms for labeling and are listed for reference in Table 4.

Table 4: FTHE Electrical Enclosure Labels and Locations

Label	Description	Location
ENC1	HPU Low Voltage Enclosure	HPU aft, starboard side
ENC2	Local Control Panel (Pedestal)	Deck Operator Van
ENC3	HPU High Voltage Enclosure	HPU aft, port side
ENC4	Levelwind Enclosure	LW port, forward side
ENC5	Control Van Panel (Remote)	Control Van electronics cabinet
ENC6	HPU Load Break Center Enclosure	HPU forward, starboard side
ENC7	HC Gas Intensifier Enclosure	HC starboard, aft side
ENC8	HC High Voltage Enclosure	HC aft, starboard side
ENC9	HC Low Voltage Enclosure	HC starboard, aft side
ENC10	Signal Conditioning Interface Enclosure	Control Van electronics cabinet
ENC11	A-Frame Accelerometer Enclosure	A-Frame Docking Head (top)
ENC12	Heave Compensator Accelerometer Enclosure	HC Flying Head
ECL13	A-Frame Load Pin J-Box	DCV Station, forward
ECL14	PDS Main Circuit Breaker Enclosure	PDS forward end
ENC15	PDS Transfer Switch Enclosure 2	PDS middle enclosure
ENC16	PDS Transfer Switch Enclosure 1	PDS aft end
ENC17	Test Shape Electronics Interface Enclosure	Control Van electronics cabinet
ENC18	NFESC Control Van Enclosure (break-out box)	Control Van aft, port side
ENC19	NFESC Control Van J-Box (slip ring cables)	Control Van aft, port side

Each cable connection is labeled according to the electrical enclosure origin and the electrical enclosure destination as listed in Table 5.

Table 5: FTHE Electrical Cable Connections

ORIGIN			DESTINATION			Cable Length (FT)
Enclosure	**Conn.**	**Label (Cable #)**	**Enclosure**	**Conn.**	**Label (Cable #)**	
ENC14 (PDS)	LI, L2, L3	**HPU PWR**	ENC6	P59/J59	**HPU PWR**	**140**
ENC1	J5/P5	(68)	ENC2	Hard Wired	(68)	75
ENC1	J51/P51	(1)	**ENC18** (ENC5)	P54/J54	(1)	90
ENC1	J41/P41	(3)	A-Frame JB-3	P2/J2	(3)	60
ENC1	J42/P42	(4)	ENC9	P39/J39	(4)	50
ENC1	J43/P43	(5)	ENC4	P1/J1	(5)	60
ENC1	J52/P52	(2)	**ENC18** (ENC10)	P55/J55	(2)	90
ENC4	Hardwired	ENC4	JB-6 (Drum Count)	P4/J4	P4/J4	—
ENC14 (PDS)	LI, L2, L3	**HC PWR**	ENC8	P60/J60	**HC PWR**	**140**
ENC9	J58/P58	(6)	**ENC18** (ENC10)	P53/J53	(6)	100
ENC9	J57/P57	(7)	**ENC18** (ENC5)	P56/J56	(7)	100
ENC13		(8)	**ENC18** (ENC5)		(8)	62
SR-2	J2		**ENC19** (ENC17)			
SR-2	J5		**ENC19** (ENC17)			
SR-1	J4		**ENC19** (ENC17)			
SR-1	J6		**ENC19** (ENC17)			
Genset		**PDS PWR**	**ENC15** (PDS TSW-2)		**PDS PWR**	

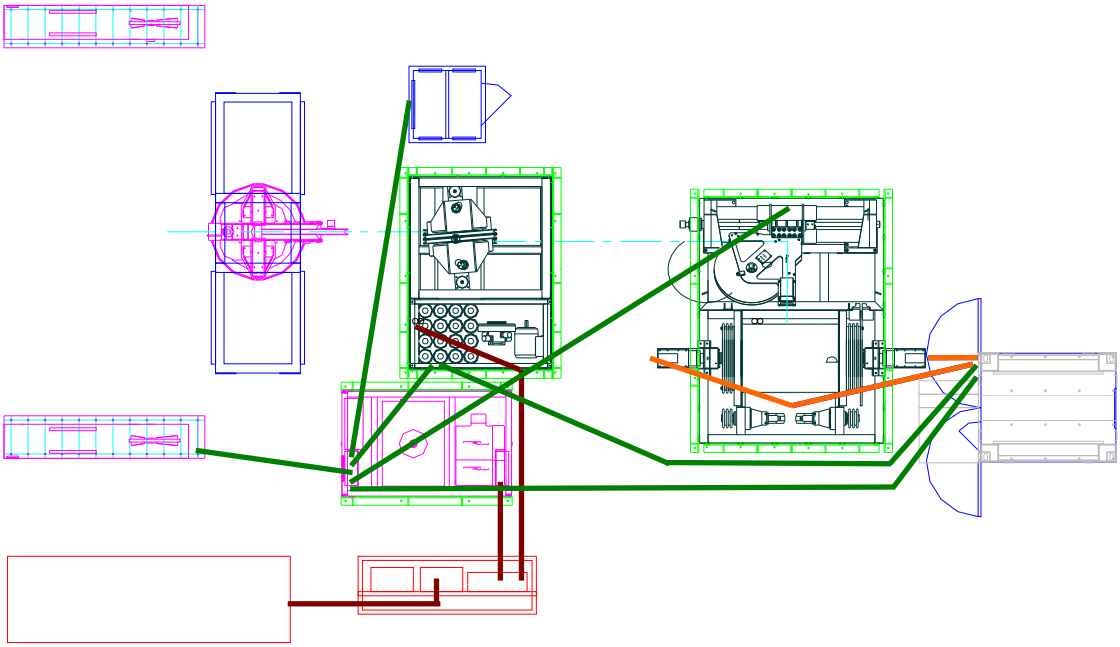

Figure 2: FTHE Electrical Cable Paths & Connection Locations

5.4.3 Electrical Power Continuity Checks

The FTHE requires 480 VAC, 60 Hz, 3-phase power and is provided from portable service generator(s) via Power Distribution System (PDS) transfer switches and circuit breakers. The HPU requires 300 Amp power and the Heave Compensator requires 250 Amp power.

The electrical cables and connectors should all be checked for damage after handling for mobilization. All connector pins should be checked for signs of corrosion after storage and cleaned as needed.

Perform the following procedures for conducting FTHE electrical system continuity checks for validating proper installation.

a. Ensure the Generator(s) supplying power to FTHE PDS is OFF and secured. Tag-out the Generator Main Power Switch to prevent inadvertent start-up during electrical continuity checks.
b. Open the PDS Transfer Switch (TS2) panel door and visually check that the Normal (A) & Emergency (B) switches are in OFF position. If not, then use the manual switch handle (yellow Hubbell tool stored on inside of panel) to turn switches OFF.
c. Check continuity of connection from Generator to PDS Transfer Switch (TS2). Using a Digital Multimeter with about 12’ leads, check for tone on each of the three phases at bus bars of Generator and “Normal” side (top) of transfer switch. Check each bus to ensure there is conductivity to only one (e.g.: no shorts).
d. Check continuity of power cables from PDS Main Power Transfer Switch Panel to both the HPU and Heave Compensator. Using a Digital Multimeter, check for tone on all of the cable conductors by touching leads to corresponding connector pin on each end of cable. Also check the other two connector pins to ensure there is conductivity to only one (e.g.: no shorts).
e. Connect the power cables from PDS Main Power Transfer Switch Panel to both the HPU’s Load Break Center Enclosure (ENC6) and the Heave Compensator’s High Voltage Enclosure (ENC8).
f. Check to ensure the power switches are in OFF position at the HPU Load Break Center Enclosure (ENC6) & Heave Compensator High Voltage Enclosure (ENC8).
g. Open the PDS Main Power Transfer Switch Panel and ensure that the circuit breakers for the HPU (300 Amp), HC (250 Amp) and Spare (30 Amp) are all in the OFF position.
h. Close the PDS Transfer Switch (TS2) enclosure door and secure. Ensure that the exterior Transfer Switch toggle is in the NORMAL POWER position.
i. Perform portable Generator start-up procedure (may differ depending on rental unit), follow the instructions from the manufacturer’s operation manual.
j. Once the Generator has been started and warmed-up, check the panel meters to ensure correct voltage of 480VAC & frequency of 60Hz, adjust as needed.
k. Check that the PDS Transfer Switch (TS2) panel’s NORMAL POWER green indicator lamp is on. Also check the Shark 100 panel meter to ensure correct readings for voltage of 480VAC and frequency of 60Hz.
l. Open the PDS Main Power Transfer Switch Panel and turn the HPU (300 Amp) circuit breaker ON. Then close and secure the enclosure door.

m. At the HPU Load Break Center Enclosure (ENC6) turn power switch to ON.

n. Have assistant push HPU #1 START button on the HPU High Voltage Enclosure (ENC3) while you stand at forward end of HPU to watch for rotation of HPU #1 motor with hand on the Load Break Center Enclosure (ENC6) power switch. If the motor's fan turns counterclockwise, then immediately turn power switch OFF. Correct by re-terminating the generator cable conductors in the PDS Transfer Switch (TS2) by switching two leads. If HPU motor turns clockwise, then the power cables were terminated properly.

5.4.4 Electronics Cabinet Subassemblies

The Control Van electronic subassemblies should be installed into the cabinet and electrically connected to the UPS, and in turn, the UPS to receptacle power. The UPS should not be connected to the Control Van receptacle until after the Control Van has received its 208 VAC power. The electrical power and signal cable connections must be completed prior to the start-up and operation of the FTHE System and are provided in Table 6.

Table 6: Electronics Cabinet Subassembly Cable Connections

CONNECTION FROM		CARRYING	CONNECTION TO
Control Van Panel [ENC5]	Terminal Board TB1 and TB4	Signal	Signal Interface Enclosure [ENC10 (P10)], via Control Van Enclosure [ENC18]: UW Slip Rings, HC Low Voltage Enclosure [ENC9], & A-Frame Load Pin J-Box [ECL13]
Control Panel	120 VAC	Power	UPS Receptacle
Monitor	120 VAC	Power	UPS Receptacle
Computer	Processor Card	Signal	Monitor
Computer	NI7041/6040E	Signal	Signal Interface Enclosure [ENC10 (STB1)]
Computer	NI6527	Signal	Signal Interface Enclosure [ENC10 (STB2)]
Computer	NI6527	Signal	Signal Interface Enclosure [ENC10 (STB3)]
Computer	NI6034E	Signal	Test Shape Electronics Interface Enclosure [ENC17 (Multifunction DAQ Breakout)]
Computer	Processor Card	Signal	Keyboard
Computer	Processor Card	Signal	Trackball
Computer	120 VAC	Power	UPS Receptacle
Signal Interface Enclosure [ENC10]	J10, J1 & J2	Signal	Control Van Panel [ENC5] & via Control Van Enclosure [ENC18]: HC Low Voltage Enclosure [ENC9], and A-Frame Load Pin J-Box [ECL13]
Signal Interface Enclosure	120 VAC	Power	UPS Receptacle
Test Shape Signal Interface	U1, U2 & U3	Signal	Umbilical Winch (UW) Slip Ring via Control Van J-Box [ENC19]
Test Shape Signal Interface	120 VAC	Power	UPS Receptacle
UPS	120 VAC	Power	Control Van Power Receptacle

5.5 PNEUMATIC INTERCONNECTION HOOK-UPS

5.5.1 Pneumatic Considerations

Working in and around high-pressure machinery and the associated hoses and connections requires specific safety warnings to be addressed. The HC System stores nitrogen as a low-pressure gas, but through the use of an intensifier (compressor) raises it to a high, operational pressure. As part of this system, the Servo Accumulator (ACC-3) must be precharged to a specific pressure (Table 8) depending on the various vehicle/package weights required for FTHE operations. Eventually, nitrogen pressure will decrease to a point where it must be replaced. Nitrogen gas is added to the system using external supply bottles.

Various personnel and equipment safety considerations when operating with high pressure gas are provided in **WARNING** and **CAUTION** statements that follow:

WARNING

Always shut down and decompress the complete system prior to performing any maintenance on the compressor.

WARNING

Always disconnect the system from the main supply prior to performing any maintenance on the compressor system with electric motor drive.

WARNING

Never repair pressure lines by soldering or welding.

WARNING

Never open any hydraulic outlet valves (allowing hydraulic oil to vent to the atmosphere) when the system is under pressure but not completely connected. The highly pressurized emerging gas can cause serious accidents.

CAUTION

Low nitrogen pressure can have an adverse effect on FTHE system operations. At the commencement of each mobilization, check for nitrogen leaks at all fittings and couplings using soapy water or spraying with leak test spray. Repair any leaks found by tightening joints or replacing faulty components.

CAUTION

All connecting hoses must be in satisfactory condition with threads undamaged. Carefully inspect the interface of hose-to-hose fittings for rubber scoring and replace if damaged. When the rubber is scored, water can enter and attack the wire gauze causing rust, thereby compromising personnel and system safety.

CAUTION

Do not allow the nitrogen gas bottles to drop below 500 psig to prevent the entrance of moisture and ambient air into the bottles.

5.5.2 HC Assembly Gas Reclamation System

The HC Assembly Gas Reclamation System uses nine 2,250 psig low-pressure nitrogen storage bottles (GB-8 to GB-16) to provide a sufficient quantity of nitrogen to allow the HC Assembly to operate properly. In turn, the intensifier (compressor) uses five 3,500 psig high-pressure nitrogen receiver bottles (GB-3 to GB-7) for accepting the high-pressure nitrogen it creates. The 14 nitrogen gas bottles used for operations are located in the HC Gas Bottle Rack on the upper level of HC Assembly and their locations are identified in Figure 3 (plan view, with starboard side of ship at top and aft on right).

Two gas bottles (GB-1 & GB-2) are labeled in rack, however, these two bottles are actually located in lower level next Servo Accumulator (ACC-3) for which they are connected. These two slots in Gas Bottle Rack are now filled with spare storage gas bottles (GB-17 & GB-18).

Note: The intensifier (compressor) requires a minimum of 500 psig at HDR-20 to operate.

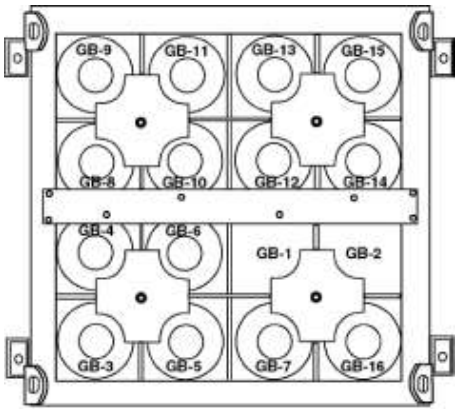

Figure 3: HC Gas Bottle Rack

5.5.3 Pneumatic Connections

The nine storage bottles are connected to low-pressure header (HDR-20) and the five receiver bottles are connected to high-pressure header (HDR-21) in the HC Gas Bottle Rack. Once the HC Gas Bottle Rack is secured within its position in the HC Assembly, four nitrogen lines must be connected to the HC Assembly. All HC Gas Reclamation nitrogen hose connections are listed in Table 7.

Table 7: HC Gas Reclamation Nitrogen Hose Connections

LOW PRESSURE		HIGH PRESSURE	
HDR-20	**CONNECTION**	**HDR-21**	**CONNECTION**
Hose 119	GB-8	Hose 128	GB-3
Hose 120	GB-9	Hose 129	GB-4
Hose 121	GB-10	Hose 130	GB-5
Hose 122	GB-11	Hose 131	GB-6
Hose 123	GB-12	Hose 132	GB-7
Hose 124	GB-13	BV-22	Hose 110
Hose 125	GB-14	BV-25	Hose 112
Hose 126	GB-15	BV-26	Hose 113
Hose 127	GB-16	BV-27	Hose X
BV-29	Hose 6 from PG-12	BV-28	Hose X
BV-TF	Hose 7 from BV-18	N/A	N/A
BV-23	Hose 8 from CV-14 & CV-15	N/A	N/A

5.5.4 Adding Nitrogen to Gas Reclamation System from an External Source

Eventually the nitrogen will decrease in pressure through leaks or natural attrition and must be replaced. To add nitrogen to the HC Assembly Gas Reclamation System from an external source, perform the following procedures:

a. Perform start-up procedures for the Heave Compensator system.

b. At the Local Control Panel (Pedestal - ENC2), flip the HEAVE COMP toggle switch to the "UNLOCK" position.

c. At the HC High Voltage Enclosure (ENC8), turn the power switch to ON.

d. Ensure HC Flying Head Assembly is bottomed-out by pressing COMPENSATOR toggle switch to LOWER on the HC High Voltage Enclosure (ENC8) until main cylinders CYL-15 & CYL-16 are fully retracted.

e. Secure the HC from operating by flipping the HEAVE COMP toggle switch on Local Control Panel (Pedestal - ENC2) to LOCK position, close switch cover and tag-out the Pedestal Control Panel with “DO NOT OPERATE”. Visually confirm that both ball valves BV-9 & BV-11 are closed. Close ball valve BV-32.

f. At the HC High Voltage Enclosure (ENC8), press the COMPENSATOR toggle switch to LOWER and decrease the receiver bottles pressure to 500-600 psig.

g. Close all but one of the nitrogen storage bottles in the Bottle Rack.

h. Ensure low-pressure nitrogen ball valve BV-TF, mounted on the Bottle Rack low-pressure Header (HDR-20), is closed along with ball valves BV-17 and BV-18.

i. Disconnect the hose from BV-TF where it connects above BV-18.

j. Connect the external nitrogen bottle through a hydraulic jumper hose to BV-TF hose using a number 4 male, 37 degree Joint Industry Council (JIC) fitting.

k. Open BV-TF and slowly open the external nitrogen bottle valve.

l. At the HC High Voltage Enclosure (ENC8), press the COMPENSATOR toggle switch to RAISE and increase the receiver bottles pressure until the external storage bottle pressure has dropped to between 500 and 600 psig.

m. Once the system has come to equilibrium (500-600 psig), close the external nitrogen bottle valve and close ball valve BV-TF.

n. If more of a nitrogen charge is needed, connect a new fully-charged external nitrogen bottle and repeat the steps **j** through **m**.

o. When completed charging system with external nitrogen bottles, reconnect the line from ball valve BV-TF to ball valve BV-18.

p. Open all gas storage bottles, ball valve BV-32, and resume normal operations.

5.5.5 HC Boost Pressure Precharge Procedure

The HC Servo Accumulator (ACC-3) precharge pressure is referred to as "Boost Pressure" and is read from the Boost Accumulator Gas Pressure gauge on aft gauge panel above the HC High Voltage Enclosure. The HC Servo Accumulator (ACC-3) and nitrogen gas bottles (GB-1 & GB-2) need to be precharged to an initial pressure that is 10% below the HC hydraulic system pressure which is based upon the anticipated A-Frame load range, see Table 8.

Table 8: Boost Accumulator Gas Pressure Charge for A-Frame Load Range

A-FRAME LOAD RANGE	HC HYD. OIL PRESSURE	BOOST ACCUMULATOR GAS PRESSURE
5,000 to 24,000 lbs	2,200 psig	1,980 psig
24,000 to 34,000 lbs	2,500 psig	2,250 psig

CAUTION

If the umbilical is reeved on the HC sheaves and the Flying Head was not left in lowest position, the following procedure will cause the umbilical to slack. Ensure personnel in area are aware of this prior to lowering HC Flying Head.

NOTE: The HC Boost Accumulator Gas Pressure cannot be changed to accommodate different A-Frame Assembly weight loads *until* the hydraulic oil in accumulators ACC-1 and ACC-2 has been completely drained and the nitrogen pressure reduced to 0 psig.

To adjust proper HC Boost Accumulator Gas Pressure for A-Frame load range, precharge the HC Servo Accumulator (ACC-3) and gas bottles (GB-1 & GB-2) with nitrogen by performing the following steps:

a. Perform start-up procedures for the Heave Compensator system.

b. At the Local Control Panel (Pedestal - ENC2), flip the HEAVE COMP toggle switch to the "UNLOCK" position.

c. At the HC High Voltage Enclosure (ENC8), turn the power switch to ON.

d. Ensure HC HPU motor is secured by verifying the HPU RUNNING lamp is out and then tag-out the HC's HPU START button with "DO NOT OPERATE".

e. Ensure the hydraulic oil OPEN LOOP SYSTEM PRESSURE gauge reads 0 psig.

f. Ensure HC Flying Head Assembly is bottomed-out by pressing COMPENSATOR toggle switch to LOWER on the HC High Voltage Enclosure (ENC8) until main cylinders CYL-15 & CYL-16 are fully retracted.

g. Secure the HC from operating by flipping the HEAVE COMP toggle switch on Local Control Panel (Pedestal - ENC2) to LOCK position, close switch cover and tag-out the Pedestal Control Panel with "DO NOT OPERATE". Visually confirm that both ball valves BV-9 & BV-11 are closed. Close ball valve BV-32.

h. Verify that the ball valves BV-38 (on GB-1) and BV-39 (on GB-2) are open, located aft inside cage by Servo Accumulator 3 (ACC-3).

i. At the upper level bottle rack, close all but one of the receiver bottle valves.

j. Slowly open BV-14, located on forward top of the Hydraulic Panel, which will release pressure from the one high-pressure nitrogen receiver bottle (previous step) to gas bottles GB-1 and GB-2 via header HDR-16.

k. At the HC High Voltage Enclosure (ENC8), hold the COMPENSATOR toggle switch to RAISE position until the Boost Accumulator Gas Pressure gauge shows the desired pressure, determined by the A-Frame load range shown in Table 8. Release the toggle switch, which turns off the intensifier (HC compressor).

l. Close BV-14, located on top forward end of the Hydraulic Panel.

m. Close ball valves BV-38 (on gas bottle GB-1) and BV-39 (on gas bottle GB-2) if the HC system is not going into immediate use.

n. Return the receiver bottles to their normal operating pressure using the intensifier and holding the COMPENSATOR toggle switch to LOWER position.

o. At the upper level bottle rack, open all the receiver bottle valves.

p. Open ball valve BV-32, located on the HC Hydraulic Panel forward end.

q. Refill the HC Main Cylinders (CYL-13 & CYL-14) with hydraulic oil and then balance the cylinders and their accumulators (ACC-1 & ACC-2) to 50% of travel.

5.6 HYDRAULIC INTERCONNECTION HOOK-UPS

5.6.1 Hydraulic Considerations

Working in and around high-pressure machinery, the associated hoses and connections requires specific safety warnings to be addressed. The FTHE System utilizes high operational hydraulic pressures where special caution needs to be exercised. Various personnel and equipment safety considerations when operating with high pressure hydraulic systems are provided in WARNING and CAUTION statements that follow:

WARNING

Always shut down HPU power, isolate specific line(s) by shutting valves, and depressurize hydraulic system prior to performing any maintenance.

WARNING

Never repair pressure lines by soldering or welding.

WARNING

Never open any hydraulic outlet valves (allowing hydraulic oil to vent to the atmosphere) when the system is under pressure but not completely connected. Highly pressurized, emerging oil can cause serious accidents.

CAUTION

Low HPU Charge Pressure (less than 350 psi) can have an adverse effect on the HPU pumps. At the commencement of each power-up, check the Charge Pressure gauge to ensure it reads ~370 psi, otherwise press STOP button and perform trouble shooting to correct.

CAUTION

All hydraulic connecting lines must be in satisfactory condition, with no visible damage or leaks. Carefully inspect the interface of hose connections and interconnecting fittings for damage or leaks. Repair any leaks found by tightening joints or replacing faulty components.

5.6.2 Hydraulic Connections

The hydraulic hose connections for all FTHE major units must be completed prior to start-up and operation of the Umbilical Winch System and A-Frame Assembly (Figure 4). All loose hoses must be tied-down to deck or equipment frame-work with tie wraps to prevent being washed about during heavy seas.

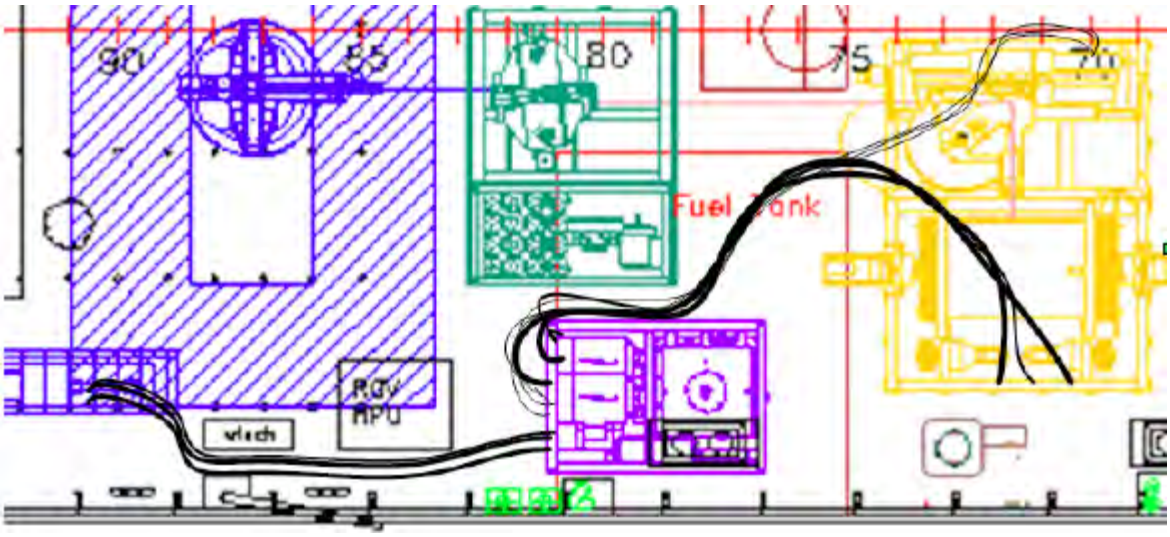

Figure 4: FTHE Hydraulic Hose Paths & Connection Locations

5.6.3 A-Frame Hydraulic Interconnection

The A-Frame hydraulic hose interconnections, from HPU to the A-Frame Assembly Manual DCV Station, are shown in Figure 4 and listed in Table 9. This mobilization effort assumes the A-Frame assembly is moved as one unit, with all interconnecting hydraulic lines between legs and Docking Head intact.

Table 9: A-Frame Hydraulic Hose Interconnection

HOSE ORIGIN	HOSE LABEL	HOSE DESTINATION
HPU Manifold (LARS PRESS. label)	LARS Press.	FL-11 **QD** (Manual DCV Station)
DCV-1 **QD** (Manual DCV Station)	LARS Return	HPU Manifold (LARS RETURN label)
HPU Manifold (LARS ZERO PRESSURE label)	LARS Zero Press.	HDR-7 **QD** (Manual DCV Station)

5.6.4 Umbilical Winch / Levelwind Hydraulic Interconnection

The Umbilical Winch / Levelwind System hose interconnections are shown in Figure 4 and listed in Table 10.

Table 10: Umbilical Winch / Levelwind Hydraulic Interconnection

HOSE ORIGIN	HOSE LABEL	HOSE DESTINATION
HPU Manifold (STORAGE WINCH CASE)	UW Case	HM-2 **QD** (UW port, forward side)
HPU Manifold (STORAGE WINCH A)	UW Port A	FL-5 **QD** (UW port, aft side)
HPU Manifold (STORAGE WINCH B)	UW Port B	FL-6 **QD** (UW port, forward side)
HPU Manifold (LEVELWIND PRESS.)	LW Press.	FL-10 **QD** (LW Hyd Panel, port, forward side)
SW-1 **QD** (LW Hyd Panel, port, aft side)	LW Return	HPU Manifold (LEVELWIND PRESS.)
HPU Manifold (LEVELWIND ZERO PRESSURE)	LW Zero Press.	HDR-4 **QD** (LW Hyd Panel, port side)
BRAKE **QD** (LW Hyd Panel, port side)	UW Brake	UW Brake Line (aft, below brake)

5.6.5 Hydraulic System Oil Replacement

5.6.5.1 Upper Case Drains

If the FTHE is shipped with all oil reservoirs and cases drained, then the following steps must be accomplished prior to startup.

Table 11: FTHE Upper Case Drain Locations

EQUIPMENT	DESIGNATION	FLOWLINE	NUMBER OF DRAINS
Umbilical Winch Pumps	HP-IA	25	1
	HP-2A	29	1
Levelwind / Auxiliary Pumps	HP-IB	40	1
	HP-2B	41	1
UW Hydraulic Motors	HM-1	16	1
	HM-2	17	1

NOTE: All hydraulic fluid should be passed through a 5-micron filter prior to commencing each FTHE System mobilization.

a. Remove upper case drain fittings as listed in Table 11.
b. Remove dirt, grease, or other contaminants from the surface areas surrounding the upper case drain openings and from the upper case drain fittings.
c. Fill pump and motor cases through the upper case drain openings with hydraulic fluid provided with the FTHE System.
d. Reinstall and tighten case drain lines and tighten all fittings where required.
e. Loosen suction lines at the respective pump inlet.
f. Using a 5-micron filter cart, fill the power unit reservoir until fluid reaches the loosened hoses at the respective pump inlet(s). Tighten the hoses and continue filling the reservoir, ensuring that the reservoir fluid level has reached the "HIGH" mark on the applicable sight level gauge.
g. Recheck pump and motor case fluid levels.

5.6.5.2 HC Hydraulic Oil Replenishment Procedure

Replenishment of the hydraulic oil in closed loop system of the HC Flying Head cylinders (CYL-13 & CYL-14) and accumulators (ACC-1 & ACC-2) is required during mobilization. Periodic flush and fill of this oil is recommended after every 2 weeks of continuous operations in order to prevent degradation of oil that may reduce operational effectiveness.

For this operation the receiver bottles will need pressure reduced to only 100-200 psi, which if at operational charge will result in appreciable nitrogen being vented. Therefore, it may be necessary to replace the nitrogen lost from the flush, such that replacement storage bottles should be available to complete procedure.

CAUTION

The HC Flying Head will be moved during these procedures. Ensure all personnel are clear of HC *prior* to moving Flying Head. Also check that Flying Head path is clear and no loose tools or foreign materials are on HC.

NOTE: The HC Boost Accumulator Gas Pressure cannot be changed to accommodate different A-Frame Assembly weight loads *until* the hydraulic oil in accumulators ACC-1 and ACC-2 has been completely drained and the nitrogen pressure reduced to 0 psig.

The following procedures assume the umbilical is NOT installed on HC and can be performed without utilizing the Control Van computer.

1. Ensure BV-9 and BV-11 are closed. This is required to ensure the flying head does not inadvertently move.
2. Open the valves on the Receiver Bottles.
3. Open the valves on the Storage Bottles.
4. Ensure BV25-28 are open.
5. Ensure BV-12,13,15,16 are open.
6. Ensure BV-22 and BV-23 are open.
7. Turn on the power switch to the Heave Compensator
8. Set the pressure in the receiver bottles to 100-200 psi.
    a. To increase pressure, open BV-24 to transfer gas from storage bottles.
    b. To lower pressure, hold the intensifier operation switch to the LOWER position until 500 psi is achieved in receiver bottles, then loosen a hose fitting to one receiver bottle venting nitrogen until 100-200 psi is achieved.
9. Remove the pin securing the actuators to BV-9 and 11 so the valves can be actuated manually.
10. Open BV-10, located on the HC Hydraulic Panel top aft end.
11. Move BV-31 to the drain position.
12. Open BV-30 to allow the oil from the cylinders to vent to the reservoir. This will lower the flying head if it is not landed.
13. Manually, open BV-9 slowly. The oil inside accumulator ACC-1 will vent to the reservoir. There is the possibility that it may raise the docking head, but it will lower again.

14. Manually, slowly open BV-11. The oil inside accumulator ACC-2 will vent to the reservoir. There is the possibility that it may raise the docking head but it will lower again.
15. Start the Heave Compensator HPU.
16. Close ball valve BV-32, then switch BV-31 from drain to fill. This will fill the accumulators and then the flying head will rise.
17. Before the head reaches full stroke (approximately 42 inches), move BV-31 back to drain. This will drain the cylinders, lowering the flying head and then drain the accumulators.
18. Allow 2 minutes after the flying head lands for the accumulators to empty.
19. Manually close BV-9 and 11.
20. Move BV-31 to fill. Just before the flying head reaches full stroke, move BV-31 back to drain.
21. Repeat step 20 several times to dilute the dirty oil with clean oil
22. Fill the cylinders near full again and close BV-30.
23. Manually open BV-9. The flying head will lower, pumping the cylinder oil into ACC-1. If the flying head does not lower, the pressure in the accumulator is too high and must be reduced. See step 8b.
24. When the flying head has landed, close BV-9.
25. Open BV-30 to raise the flying head filling the cylinders again. Close BV-30 when near full.
26. Manually open BV-11. The flying head will lower, pumping the cylinder oil into ACC-2.
27. When the flying head has landed, close BV-11.
28. Move BV-31 handle horizontal to its neutral position.
29. The oil level in the cylinder/accumulator circuit has now been flushed and filled. If the computer is available, ACC-1 and 2 accumulator pistons should both be at approximately 20% if done correctly. If not, repeat from step 11.
30. Increase the pressure in the receiver bottles to 500 psi by opening BV-24 until the pressure is achieved.
31. Close BV-10, located on the HC Hydraulic Panel top aft end.
32. Reinstall the pins securing the actuating cylinders to BV-9 and BV-11.
33. Verify using the checklists that all valves are in the correct position for operation or shutdown, depending the next evolution.

5.7 COOLING WATER INTERCONNECTION HOOK-UPS

Cooling water should run continuously when the FTHE LARS systems are operating and secured when the FTHE is secured. The cooling water hose connections for both the HPU and the HC must be completed prior to start-up and operation of the applicable FTHE LARS system. The cooling water hose connections are listed in Table 12.

Table 12: Cooling Water Hose Connections

UNIT	SUPPLY	IN	CONNECTION	OUT	DESTINATION
HPU	Ship	PSH-4	HX-1	Discharge	Overboard
HC	Ship	SOV-6	HX-2	Discharge	Overboard

5.8 HEAVE COMPENSATOR UMBILICAL REEVE

The following procedures should be performed to properly reeve the umbilical onto the Heave Compensator's sheaves.

WARNING

Death or injury can result when working around operating machinery or from falls from high elevations while routing the umbilical cable. To prevent death or injury, keep back from immediate contact with operating machinery and pay attention to safe footing when working at high elevations.

CAUTION

DO NOT allow the umbilical cable to be subjected to a bend radius of less than 20 inches or pass over sharp bends or rough surfaces. Otherwise damage to the umbilical cable can occur.

CAUTION

The umbilical termination and J-Box can be damaged if handled incorrectly. Be extra careful when passing off the J-Box from HC upper level to lower level while reeving umbilical around the HC sheaves.

To route the umbilical through the HC Assembly, perform the following steps:

a. Open the forward and aft HC Assembly lower level access doors.

b. Remove the mounting hardware and sheave cable guides from the lower head assembly (DD 0707-7001-01, Item 1). (See Figure 5)

Figure 5: HC Lower Head Assembly

Figure 6: HC Flying Head Assembly - Top View

c. Remove the mounting hardware and flying head top compression weldment (DD 0707-7001-03, Items 17, 18, 19, 20, and 10). (See Figure 6)

d. Pay out umbilical cable as required keeping in mind the bend radius requirement.

e. Position at least two personnel in the upper level of the HC Assembly ready to receive the junction box and cable.

f. Securely attach a rope to the junction box and pass the rope under the bottom, starboard sheave and on up to the upper level personnel.

g. Pull the junction box/cable up and over the top, starboard sheave and back down to the bottom of the HC Assembly.

h. Guide the umbilical cable into the bottom, middle sheave and again pass the rope/junction box to the upper level personnel.

i. Pull the junction box/cable up and over the top, port sheave and back down to the bottom of the HC Assembly.

j. Guide the umbilical cable into the bottom, port sheave and exit the HC Assembly through the aft access door.

k. Reinstall the flying head top compression weldment and mounting hardware.

l. Reinstall the sheave cable guides and mounting hardware on the lower head assembly.

m. Close and secure the forward and aft HC Assembly lower level access doors.

5.9 FTHE START-UP & SHUT-DOWN PROCEDURES

Every time the FTHE system is to be operated, there are procedures and critical inspections that shall be conducted to confirm system readiness, to prevent equipment damage, and to ensure safe operations.

5.9.1 FTHE Prestart Inspections

Prior to powering up FTHE systems, the following Prestart Inspection Sheets shall be checked-off and signed by qualified inspector.

Table 13: FTHE Prestart Inspection Sheets (Unpowered)

FTHE PRESTART INSPECTION SHEET 1				
Date / Time		**Inspector**		**Signature**
√	**Item**	**Action**	**Location**	**Notes**
FTHE Control Pedestal				
	Emergency Stop	Pull button up	Panel top right	Allows system to operate
	HC Switch	Remove covering and verify HC switch in the LOCKED position.	Lower right panel quadrant	Locks the Heave Compensator from operating
A-Frame				
	Ball Valves (BV) BV-6 and BV-7	Verify ball valves OPEN	A-Frame, Main Cylinders	Ball valves used to isolate hydraulic oil between A-Frame cylinders and hydraulic headers.
	BV-8	Verify ball valve OPEN (handle vertical)	Under the DCV Station	
	A-Frame System Deck Area and DCV Station	Check for loose hoses, oil leaks or unusual conditions. Ensure no objects are on stops.	A-Frame, lower	The DCV Station is the local control for all operations of the A-Frame and Cursor.
	A-Frame DCV Station Controls	Move control levers to ensure range of motion	DCV Station, Top controls	Hydraulic control levers should be checked for proper lubrication
	A-Frame J-Box (JB-3) control cable connector	Verify cable/connector tightness	Manual DCV Station, forward end	Connector must be screwed in all the way to ensure proper contact of conductors.
	Load Pin connector	Verify cable connector tightness	DCV Station ECL13	
	Swing Frame and Cursor	Check for loose hoses, oil leaks or unusual conditions.	A-Frame Docking Head Platform	A-Frame Docking Head Platform *inspection required at least once per week.*
	Load Pin connector	Verify cable connector tightness	Swing Frame ECL11	*Inspection required at least once per week.*
	Cursor Winch Payout Limit Switch XS11	Verify switch-arm free for movement and inspect rope quality	Swing Frame Cursor	*Inspection required at least once per week.*

FTHE PRESTART INSPECTION SHEET 2				
Date / Time		Inspector		Signature
√	Item	Action	Location	Notes
Hydraulic Power Unit (HPU)				
	Cooling water	Inspect and clean strainer	Behind HPU manifold, aft	Also check HC strainer prior to turning on the cooling water.
	Cooling water	Turn on & verify discharge	Overboard	
	LG-1	Verify oil visible in gauge	HPU Tank	Level Gauge preferably ½ full.
	BV-1, BV-2, BV-3 & BV-4	Verify ball valves CLOSED	HPU port side	HP-1A and HP-2A Umbilical Winch pump discharge ball valves
	HPU Low Voltage Enclosure (ENC1) connectors	Verify all cable/connector tightness	Under ENC1, aft, starboard side	
	Power Switch	Verify the power switch is in the OFF position	Load Break Center (ENC6)	
	General hydraulic inspection	Check for loose hoses/leaks	Entire subsystem	
Winch and Levelwind				
	Slip Ring connectors J2, J4, J5 & J6	Verify cable/connector tightness	Forward and aft of UW drum axle	
	UW Drum Count electrical connector	Verify cable/connector tightness	JB-4 on UW aft skid, port of brake pads	
	UW Brake hyd hose	Verify hose connector tight	UW fwd-port	
	UW Mtr Dist. hose	Verify hose connector tight	UW fwd-port	
	GMB-3	Verify hydraulic oil visible	LW forward	Levelwind Gearbox sight glass
	GMB-1 & GMB-2	Verify hydraulic oil visible	UW starboard	Winch Gearbox sight glasses
	Umbilical	Verify tight wraps and umbilical path free to travel	UW Drum & LW Sheave	
	Levelwind Pivot Pins	Verify free to travel, also check that umbilical is not on top of guard.	LW Sheave Sensor	Top of LW Sheave, hold umbilical to move (guide) pins back and forth. Adjust PRRV-1 if umbilical is not centered vertically after power-up.
	Levelwind Enclosure (ENC4) Cable 5 connector	Verify cable/connector tightness	Under ENC4	
	Levelwind Carriage Assembly, Guide Bars, and Drive ACME Screw	Verify Guide Bars and ACME Drive Screw sufficiently greased; Carriage Assembly free to travel	Port side	
	General hydraulic inspection	Check for loose hoses/leaks	Entire subsystem	

FTHE PRESTART INSPECTION SHEET 3				
Date / Time		Inspector		Signature
√	Item	Action	Location	Notes
Heave Compensator (HC)				
Lower Level				
	Power Switch	Verify the power switch is in the OFF position	High Voltage Panel (ENC8)	Indicator lamp should be off
	Flying Head	Verify freedom to travel	Upper Level	
	BV-9 & BV-11 (hyd.) control by CYL-15&16	Verify valves are CLOSED (handles in low position)	Base of ACC-1 and ACC-2	Ball valves used to isolate hydraulic oil to Main Cylinders CYL-13 & 14
	Intensifier oil level	Verify oil level midrange in sight glass (orange color)	Intensifier, aft	Oil reservoir for Intensifier
	LG-2	Verify oil level in site-tube	Storage Tank, port-fwd	Level Gauge, about 2/3 full (compare to marker line)
	Cooling Water	Inspect and clean strainer	Fwd-stbd below Storage Tank	Should do with HPU strainer check, prior to turning on cooling water
	Cooling Water	Turn ON & verify discharge		Flow gage should show >10GPM
	BV-10 (hydraulic)	Verify valve CLOSED (**red** handle, vertical)	HC Hyd Panel, top-aft	Ball valve used to cross connect between HDR-12 and HDR-13
	BV-19 (hydraulic)	Verify valve OPEN (**green** handle horizontal)	HC Hyd Panel, middle-aft	
	BV-30 & BV-31 (hydraulic)	Verify valves are CLOSED (**red** handles horizontal)	HC Hyd Panel, middle-aft	Note: These valves are used to manually raise/lower Flying Head
	BV-32 (hydraulic)	Verify valve CLOSED (**yellow** handle horizontal)	HC Hyd Panel, bottom-aft	Flying Head back-up lock valve (will be opened just prior to ops)
	BV-22 & BV-23	Verify valves are OPEN (**green** handle horizontal)	HC Hyd Panel, top-fwd	Isolates the Intensifier
	BV-29	Verify valve CLOSED (**red** handle, vertical)	HC Hyd Panel, top-fwd	Isolates the Storage Bottles
	BV-12, BV-13, BV-15, BV-16	Verify valves are OPEN (**green** handles horizontal)	HC Hyd Panel, top-fwd	HDR-11: Ball valves used to isolate ACC-1 and ACC-2
	BV-24, BV-25, BV-26, BV-27, and BV-28	Verify valves are OPEN (**yellow** handles horizontal)	HC Hyd Panel, top-fwd	HDR-11: Ball valves used to isolate high press N2 receiver bottles
	BV-20	Verify valve CLOSED (**red** handle, horizontal)	HC Hyd Panel, bottom-fwd	Isolates the gas makeup bottles GMB-1, GMB-2 and GMB-3
	BV-TF	Verify valve CLOSED (**red** handle, horizontal)	HC Hyd Panel, bottom-fwd	Used for initial N2 charge of the Storage Tank, ACC-3, GB-1& GB-2
	BV-14, BV-GB1 and BV-GB2	Verify valves are OPEN (**green** handle horizontal)	HC Hyd Panel, bottom-fwd	HDR-16: Used for initial N2 charge of ACC-3, GB-1& GB-2
	BV-17 & BV-18	Verify valves are CLOSED (**red** handle, horizontal)	HC Hyd Panel, bottom-middle	Located below HDR 16, used with BV-TF to charge Storage Tank
	GMB-1, 2 & 3	Verify valves are CLOSED	Port-fwd	Isolates the gas makeup bottles
	BV-38 & BV-39	OPEN both valves, turning handles in vertical position	HC aft, center	Top of GB-1 & GB-2
	General hydraulic inspection	Check for loose hoses/leaks	Entire system	

FTHE PRESTART INSPECTION SHEET 4				
Date / Time		**Inspector**		**Signature**
√	**Item**	**Action**	**Location**	**Notes**
Heave Compensator (HC)				
Upper Level				
	GB-8, GB-9, GB-10, GB-11, GB-12, GB-13, GB-14, GB-15, GB-16, GB-17 & GB-18	OPEN valves on all eleven N2 Storage Bottles	N2 Bottle Rack, located on top of each bottle	Ball valves used to isolate N2 Storage Bottles. Open valves fully and then rotate handle back ¼ turn
	BV-33, BV-34, BV-35, BV-36 & BV-37	OPEN valves on all 5 blue N2 Receiver Bottles	N2 Bottle Rack, located on top of each bottle	Ball valves used to isolate N2 Receiver Bottles. Open valves fully, handles in vertical position
	BV-21	Verify OPEN (**green** handle vertical)	Gas Intensifier Panel, by red alarm horn	Ball valve used (in series with BV-22) to isolate high pressure N2 between receiver gas bottles and Intensifier
	General pneumatic inspection	Check all connection fittings and valves for leaks (listen for hiss)	Entire system Upper & Lower	Use soapy water to spray on connection points to visually see leaks form bubbles

Heave Compensator Valve Color Key:
Green – OPEN during operations
Red – CLOSED during operations
Yellow – Changes during operations

5.9.2 FTHE System Start-Up Procedures

The FTHE System Start-Up Procedures should be performed whenever the FTHE system is started in preparation for operation. Ensure that all personnel in the operation area are aware that system is about to be powered up and will move to appropriate safe zones if not wearing PPE (hard hats, steel toe boots, etc).

Table 14: FTHE System Power-Up Procedures

Date / Time		Inspector	Signature
√	**Item**	**Action**	
		Utilities	
	Cooling Water	Ensure that cooling water strainers are clean on both the HPU and HC. Ensure that cooling water is hooked up to both the HPU & HC, turn on water and then check the two cooling water hoses for proper discharge.	
	Electrical Power	Ensure Generator is OFF and all electrical cables are properly connected	
		Power Distribution System	
	Circuit Breakers	Open the PDS Main Power Transfer Switch Panel and ensure that the circuit breakers for the HPU, HC, and Spare are all in the OFF position.	
	TS-2 Switch	Ensure the Transfer Switch toggle is in the NORMAL POWER position.	
	Genset Start-Up	Perform portable Generator start-up procedure by following the instructions from the manufacturer's operation manual.	
	Genset Warm-Up	Once the Generator has been started, check the panel meters to ensure correct voltage of 480VAC and frequency of 60Hz, adjust as needed.	
	TS-2 Indicators	Check that the PDS Transfer Switch (TS2) panel's NORMAL POWER green indicator lamp is on. Also check the Shark 100 panel meter to ensure correct readings for voltage of 480VAC and frequency of 60Hz.	
	Circuit Breakers	Open the PDS Main Power Transfer Switch Panel and turn ON both the HPU (300 Amp) circuit breaker and the HC (250 Amp) circuit breaker.	
		Hydraulic Power Unit	
	HPU Power Switch	Move AC POWER circuit breaker at Load Break Center (ENC6) to ON.	
	Power Lamp	Verify power "OK" lamp at High Voltage Enclosure is illuminated.	
	Alarm Lamps	Verify Low Oil Level & High Oil Temperature alarm lamps are not lighted.	
	Heating Lamp	Hydraulic oil "Heating" lamp may be illuminated if oil temperature is low.	
	#1 START	Depress HPU #1 START button (High Voltage Panel)	
	#1 Running Lamp	Verify HPU #1 "Running" lamp is illuminated.	
	#1 Charge Gauge	Verify #1 Charge Pressure is about 390 psi, *otherwise* hit STOP & check.	
	#2 START	Depress HPU #2 START button (High Voltage Panel)	
	#2 Running Lamp	Verify HPU #2 "Running" lamp is illuminated.	
	#2 Charge Gauge	Verify #2 Charge Pressure is about 380 psi, *otherwise* hit STOP & check.	
	#1 Open Loop Gage	Verify #1 Open Loop Pressure is approximately 3,000 psig	
	#2 Open Loop Gage	Verify #2 Open Loop Pressure is approximately 2,900 psig	
	LW Pressure Gage	Verify Levelwind Pressure is approximately 3,000 psig	
	BV-1 & BV-2	Open BV-1 and BV-2 for HPU #1.	
	BV-3 & BV-4	Open BV-3 and BV-4 for HPU #2.	
	HPU System	Visually observe HPU for hydraulic oil leaks.	
	UW, LW & AF	Visually observe Winch, Levelwind, and A-Frame for hydraulic oil leaks.	

Date / Time	Inspector	Signature

√	Item	Action
		Heave Compensator
	HC Power Switch	Move HC Power Breaker to ON (High Voltage Panel)
	Power Lamp	Verify AC Power "OK" lamp is illuminated.
	Alarm Lamps	Verify Low Oil Level & High Oil Temperature alarm lamps are not lighted.
	Boost Accum. Gas Press. Gage	Verify Boost Accumulator Gas Pressure is between 1,850 to 2,500 psig, depending on load. If not in range, then correct *prior* to starting system.
	Intensifier	Verify Intensifier is operational by toggling Compensator – Raise & Lower
	HC START	Depress the HC START button (High Voltage Panel)
	Running Lamp	Verify HC "Running" lamp is illuminated.
	Open Loop Gage (& Boost Gas)	Verify Open Loop System Pressure at approximately 2,000 psig. Note: Boost Accum. Gas Press. will increase to same pressure.
	Main Cyl Rod Gage	**Note:** Main Cylinders Rod End Pressure at 0 psig until HC mode active
	Cooling Gage	*NOT USED*
	Tank Press. Gage	Verify Tank Pressure is approximately 5 psi (maximum).
	Storage Gas Gage	Verify Storage Bottles Gas Pressure is between 1,000 to 2,300 psig.
	HC System	Visually observe HC for hydraulic oil leaks and listen for N2 leaks.
	BV-32	***AFTER LAUNCH,*** Open BV-32 just prior to activation of HC
		Control Van Electronics Rack
	UPS Power	Depress and hold the UPS ON/OFF/STAND-BY button until the power LED is illuminated and an audible "beep" occurs (approximately 1 sec).
	Test Shape Pwr	Turn the Test Shape Enclosure power switch to ON
	Computer Power	Open the computer panel door, press the POWER button to "I" (ON), observe the POWER LED is lighted and the monitor illuminates.
	Software Start	Visually observe that the computer automatically launches the *host.exe* application that provides the GUI display.

5.9.3 FTHE System Post Power-Up Inspections

The FTHE System Post Power-Up Inspection should be performed whenever the FTHE system is started in preparation for operation.

Table 15: FTHE System Post Power-Up Inspection Sheet

FTHE POST POWER-UP INSPECTION SHEET				
Date / Time		**Inspector**		**Signature**
√	**Item**	**Action**	**Location**	**Notes**
Filter Life				
	FL-1, FL-2, FL-3, FL-4	Verify indicator is in green area	HPU above BV-1 through BV-4	Replace filter when indicator is in red area.
	FL-8 & FL-9	Verify indicator is in green area	HPU Hydraulic Panel	Replace filter when indicator is in red area.
	FL-5 & FL-6	Verify indicator is in green area	Winch at GB-1, GB-2	Replace filter when indicator is in red area.
	FL-10	Verify indicator is in green area	Levelwind Hydraulic Panel	Replace filter when indicator is in red area.
	FL-11	Verify indicator is in green area	A-Frame below the Manual DCV Station	Replace filter when indicator is in red area.
	FL-13	Verify indicator is in green area	HC Hydraulic Panel, forward bottom	Replace filter when indicator is in red area.
	FL-14	Verify indicator is in green area	HC lower level	Replace filter when indicator is in red area.
Pressure Gauges				
Hydraulic Power Unit				
√	**Item**	**Nominal Value (psig)**	**HPU #1 - Pressure (psig) - HPU #2**	
	A Port Pressure	0 - 3000		
	B Port Pressure	0 - 3000		
	Charge pressure	390		
	Open loop Pressure	3000		
	Levelwind Pressure	3000		
	Return Pressure	25 (Maximum)		
Heave Compensator				
√	**Item**	**Nominal Value (psig)**	**Pressure (psig)**	**Notes**
	Boost Accumulator Gas Pressure	1850 to 2500		If not in range, then STOP HC and correct *prior* to starting system again.
	Open System Loop Pressure	2000		
	Main Cylinders Rod End Pressure	1000		
	Cooling Pump Pressure	20		
	Accumulator Gas Pressure	500 (Minimum)		Receiver Header Pressure
	Tank Air Pressure	5 (Maximum)		
	Storage Bottles Gas Pressure	1000 to 2300		Supply Header Pressure

5.9.4 FTHE System Shut-Down Procedures

The FTHE System Shut-Down Procedures should be followed whenever the FTHE system is secured from operation.

Table 16: FTHE System Shut-Down Procedures

Date / Time		Inspector	Signature
√	**Item**	**Action**	
Heave Compensator - NOTE: *Secure HC **prior** to recovering Test Shape onboard with A-Frame*			
	HC System	Verify that all FTHE activities are complete and Flying Head is bottomed.	
	HC LOCK Switch	On Control Pedestal, flip "Heave Comp" toggle switch to LOCK position	
	BV-32	Close valve BV-32, handle horizontal (HC Hydraulic Panel – Lower Level)	
	HC STOP	Depress the HC STOP button (High Voltage Panel)	
	HC Power Switch	Move HC Power Breaker to OFF (High Voltage Panel)	
HEAVE COMPENSATOR - *PROCEDURES AFTER RECOVERY AND TEST SHAPE SECURED TO DECK*			
	N2 Bottle Valves	Close valves BV-38 & BV-39 on top of GB-1 & GB-2 (lower level, aft)	
	BV-23	Close valve BV-23 (HC Hydraulic Panel – Lower Level)	
	BV-10	Open valve BV-10 to equalize hydraulic pressure between HDR-12 & HDR-13	
	High Pres. Valves	Close valves BV-22, BV-24, BV-25, BV-26, BV-27 & BV-28 (High Pressure)	
	N2 Bottle Valves	Close valves on all N2 cylinders in the Gas Bottle Rack (HC upper level)	
	HC System	Visually observe HC for hydraulic oil leaks and listen for N2 leaks.	
Hydraulic Power Unit			
	FTHE System	Verify that all FTHE operations are complete.	
	#1 STOP	Depress HPU #1 STOP button	
	#2 STOP	Depress HPU #2 STOP button	
	BV-1 & BV-2	Close BV-1 and BV-2 for HPU #1.	
	BV-3 & BV-4	Close BV-3 and BV-4 for HPU #2.	
	HPU Power Switch	Move AC POWER circuit breaker at Load Break Center to OFF.	
	HPU System	Visually observe HPU for hydraulic oil leaks.	
	UW, LW & AF	Visually observe Winch, Levelwind, and A-Frame for hydraulic oil leaks.	
A-Frame			
	BV-8	Close BV-8 (to secure Swing Frame)	
	BV-6 & BV-7	Close BV-6 & BV-7 (to secure Luff)	
Control Van Electronics Cabinet			
	Computer OFF	Depress "CTRL-ALT-DEL" keys simultaneously on the Remote Control keyboard and select "Shutdown" with the cursor.	
	Test Shape OFF	Depress the Test Shape Enclosure power switch to OFF	
	UPS OFF Button	Depress and hold the UPS ON/OFF/STAND-BY button until the power LED extinguishes and an audible "beep" occurs.	
Utilities			
	Electrical Power	Shut off breakers in PDS Main Breaker Panel and Genset Power Switch	
	Cooling Water	Turn off the cooling water to both the HPU and HC.	

6.0 FTHE FUNCTIONAL TESTS

6.1 CONTROLS AND INDICATORS FUNCTIONAL VERIFICATION

The following test procedures are utilized to verify proper function of the FTHE System controls and indicators on each individual control enclosure/panel. It is recommended these functional tests be performed dockside to ensure proper mobilization installation and integration *prior* to starting cruise. If any deficiencies are found, then problems may be resolved by trouble-shooting and performing maintenance or repair as needed.

6.1.1 Hydraulic Power Unit High Voltage Enclosure (ENC3)

The following procedures may commence after procedures from the Power-Up and Inspection Sheet have been performed, where the systems have been activated and are operating properly.

Initial for proper function

6.1.1.1 *Power Fault Lamp* - verify that the lamp flashes on initial start-up.

6.1.1.2 *Power OK Lamp* - verify lamp is lit when power status is complete and power is OK.

6.1.1.3 *HPU #1 Start* - verify HPU #1 starts when push button is depressed.

6.1.1.4 *HPU #1 Running Lamp* - verify lamp is lit when HPU #1 is running.

6.1.1.5 *HPU #1 Stop* - verify HPU #1 stops when push button is depressed.

6.1.1.6 *HPU #2 Start* - verify HPU #2 starts when pushbutton is depressed.

6.1.1.7 *HPU #2 Running Lamp* - verify lamp is lit when HPU #2 is running.

6.1.1.8 *HPU #2 Stop* - verify HPU #2 stops when push button is depressed.

6.1.1.9 *Emergency Stop* - verify that the HPU motors stop when button is depressed. Perform for HPU #1, HPU #2, and then both together.

6.1.2 Heave Compensator High Voltage Enclosure (ENC8)

Initial for proper function

6.1.2.1 *Power Fault Lamp* - verify that the lamp flashes on initial start-up when turning the HC power switch ON.

6.1.2.2 *Power OK Lamp* - verify lamp is lit when power status is complete and power is OK.

6.1.2.3 *HPU Start* - verify that HC's HPU starts when pushbutton is pressed.

6.1.2.4 *HPU Running Lamp* - verify lamp is lit when HPU is running.

6.1.2.5 *Compensator Raise / Lower Toggle Switch* - verify pneumatic circuit engages (will hear motor that turns compressor come on) and heave compensator flying head raises when the switch is pushed to "Raise". Further verify flying head lowers when switch is pushed to "Lower".

6.1.2.6 *HPU Stop* - verify HC's HPU stops when push button is pressed.

6.1.3 Local Control Pedestal (ENC2)

Initial for proper function

6.1.3.1 *HPU #1 Running Lamp* - verify lamp is lit when HPU #1 is running.

6.1.3.2 *HPU #2 Running Lamp* - verify lamp is lit when HPU #2 is running.

6.1.3.3 *Winch Brake Release Lamp* - verify that lamp is lit when brake is released by moving the winch haul-in/pay-out joystick from the center position.

6.1.3.4 *A-Frame Outboard Lamp* - verify that lamp is lit when A-frame is luffed outboard and is stationary on the hard stops. Verify that the lamp is not lit when the A-frame is not on the stops.

6.1.3.5 *Level Wind Corrector and travel test* - verify the LW jogs left when corrector is switched left and right when switched right. (Make sure the level wind travels through its full range of motion in both directions).

NOTE: *It will take less time if the LW sensor is used to cause the LW to travel through its full range of motion.*

6.1.3.6 *Winch/A-Frame HPU Stop Button* - verify both HPU motors shut down when stop button is depressed.

6.1.3.7 *System Emergency Stop Button* - verify both HPU motors and the HC motor shuts down when stop button is depressed.

6.1.3.8 *Low Tension - High Speed Lamp* - verify lamp is lit when winch is placed in low tension and extinguishes when places in High tension.

6.1.3.9 *High Tension - Low Speed Lamp* - verify lamp is lit when winch is placed in High tension and extinguishes when placed in Low tension.

6.1.3.10 *Tension High/Low* - verify winch pull is high when the toggle switch is switched to high and low when switched to low.

6.1.3.11 *Constant Tension Switch* - verify winch is in constant tension when switch is enabled.

6.1.3.12 *Constant Tension Enabled Lamp* - verify that lamp is lit when constant tension is enabled.

6.1.3.13 *Line Count Display* - verify line count increases in value as cable pays out and decreases in value as cable is hauled in.

6.1.3.14 *Line Speed Display* - verify that pay out readings are positive numbers, and haul in readings are negative.

6.1.3.15 *Line Tension Display* - verify display reading against a known cable tension.
NOTE: This is verified in Line Tension Calibration & Verification test.

6.1.3.16 *Swing-Frame Control Switch* - verify that when switch is energized, operator has control via the swing frame in/out switch. Verify when switch is turned off, the swing frame should be free to swing (damping mode).

6.1.3.17 *Swing Frame Inboard/Outboard Control Switch* - verify that the swing frame swings inboard when the switch is stroked to the inboard position and outboard when stroked outboard.

6.1.3.18 *Latch Open / Close Switch* - verify that the docking head latches open when the switch is in the open position and closed when the switch is in the closed position.

6.1.3.19 *Winch Haul-In / Pay-Out Joystick* - verify that when joystick is moved to the pay-out position, the winch pays out cable. Move joystick to haul-in position and the winch should haul in the cable.

6.1.3.20 *Cursor Winch Haul-In / Pay-Out Joystick* - verify that when joystick is moved to the pay-out position, the cursor winches pay out cable. Move joystick to the haul-in position and the cursor winches should haul in cable.

6.1.3.21 *A-Frame Joystick Luff-In / Luff-Out* - verify that the A-frame luffs in when the joystick is stroked to the luff-in position and luffs out when stroked to the luff-out position

6.1.3.22 *Remote Enable Switch* - verify when the remote is enabled, control of the winch passes to the remote joystick plugged into the control cabin panel. Verify that if the winch joystick on the local control is moved out of center, control reverts to the local control station. Further verify that remote enable is impossible if the winch joystick is out of the center position.

6.1.3.23 *Remote Enable Lamp* - verify that the lamp is lit when the remote is enabled.

6.1.3.24 *Heave Comp. Lock / Unlock Switch* - verify the small HC cylinders (CYL-15, -16) which open and close the ball valves (BV-9, -11) between the primary HC cylinders (CYL-13, -14) and the primary HC accumulators (ACC-1, -2) open the ball valve when switched to “Unlock” and close when switched to “Lock”.

6.1.4 Control Van Panel (ENC5)

Initial for proper function

6.1.4.1 *HPU #1 Charge Pressure Low Lamp* - verify that lamp is lit when HPU #1 charge pressure is less than 290 PSI (20 bar)

6.1.4.2 *HPU #2 Charge Pressure Low Lamp* - verify that lamp is lit when HPU #2 charge pressure is less than 290 PSI (20 bar)

6.1.4.3 *HPU #1 Running Lamp* - verify that lamp is lit when HPU #1 is running

6.1.4.4 *HPU #2 Running Lamp* - verify that lamp is lit when HPU #2 is running

6.1.4.5 *Winch Brake Release Lamp* - verify that lamp is lit when brake is released by moving winch haul-in/pay-out joystick from center position

6.1.4.6 *Line Count Display* - verify line count increases in value as cable pays out and decreases in value as cable is hauled in.

6.1.4.7 *Line Speed Display* - verify that pay-out readings are positive numbers, and haul-in readings are negative.

6.1.4.8 *Line Tension Display* - verify display reading against a known tension.

6.1.4.9 *Remote Enable Lamp* - verify that lamp is lit when remote is enabled.

6.1.4.10 *Winch Haul-In / Pay-Out Joystick* - verify that when the remote is enabled and the winch joystick is moved to the pay-out position, the winch pays out cable. Move Joystick to the haul-in position and the winch should haul in cable. Further verify that when the remote is not enabled, the winch joystick is inoperable.

6.1.4.11 *Winch / A-Frame HPU Stop Button* - verify both HPU motors shut down when stop button is depressed.

Heave Compensator Controls

6.1.4.12 *HC HPU Running Lamp* - verify lamp is lit when HC's HPU is running.

6.1.4.13 *HC Stop* - verify HC's HPU stops when push button is depressed.

6.1.4.14 *Computer Control Switch* - verify "Computer Control Enabled" lamp is lit when this switch is toggled into "Enable" position. Further verify this lamp is NOT lit when the switch is toggled into "Disable" position.

6.1.4.15 *Computer Control Engaged Lamp* - verify motion compensation software is controlling the action of the heave compensator when this lamp is lit. The sequence required for this lamp to light is as follows:
1. Toggle the "Computer Control" switch into the "Enable" position.
2. The "Computer Control Enabled" lamp will light sending a signal to motion control software. The software will begin to position primary heave comp. accumulators and cylinders for mid-stroke. Observe on the CPU user screen in bottom left-hand corner the "Preparing Active Control" button will be lit. Once positioning is completed, the computer takes over and lights the Control Van Panel "Computer Control Engaged" Lamp. Also observe on the CPU user screen the "Computer Control Engaged" button will also be lit. Further verify NEITHER of the lamps on the Control Van Panel (and neither of the buttons on the CPU user screen) are lit when the "Computer Control" switch on Control Van Panel is toggled into the "Disabled" position.

6.2 HYDRAULIC POWER UNIT PRESSURE SETTINGS VERIFICATION

The following procedures are utilized to verify the pressure relief settings of the pumps. It is assumed that winch and level wind are securely mounted to the deck and the HPU lines are connected to the winch and level wind.

6.2.1 HPU Factory Preset Pressure Settings

Pressure settings are factory preset and these values should not need to be adjusted *unless* a malfunction clearly indicates degraded equipment performance at start-up. Consult Reference A for maintenance procedures to correct any unsatisfactory settings and re-test.

6.2.2 HPU Pump #1 Relief Settings Verification

Verify HPU Pump #1 pressure settings by utilizing the following steps:

6.2.2.1 Disable the failsafe brake release pressure by removing the connector off of the brake release solenoid valve.

6.2.2.2 *Charge Pressure Relief Setting* - read Charge Pressure gauges on HPU gauge panel (nominally set at 390 psig)

Record pressure here: _____ psig

6.2.2.3 ***A** Port Relief Setting* - read **A** Port pressure gauge on HPU gauge panel while stroking the pump controller to full stroke **A** Port (nominally set at 4200 psig)

Record pressure here: _____ psig

6.2.2.4 ***B** Port Relief Setting* - read **B** Port pressure gauge in HPU gauge panel while stroking the pump controller to full stroke **B** Port (nominally set at 2500 psig)

Record pressure here: _____ psig

6.2.2.5 *Open Loop Pump Relief Setting* - read auxiliary pressure gauge on HPU gauge panel (nominally set at 3000 psig)

Record pressure here: _____ psig

6.2.2.6 *Level Wind Pressure Setting* - read level wind pressure gauge on HU gauge panel (nominally set at 3000 psig)

Record pressure here: _____ psig

6.2.3 HPU Pump #2 Relief Settings Verification

Verify HPU Pump #2 pressure settings by utilizing the following steps:

6.2.3.1 Disable the failsafe brake release pressure by removing the connector off of the brake release solenoid valve.

6.2.3.2 *Charge Pressure Relief Setting* - read charge pressure gauge on HPU gauge panel (nominally set at 390 psig)

Record pressure here: _____ psig

6.2.3.3 ***A** Port Relief Setting* - read **A** Port pressure gauge on HPU gauge panel while stroking the pump controller to full stroke **A** Port (nominally set at 4200 psig)

Record pressure here: _____ psig

6.2.3.4 ***B** Port Relief Setting* - read **B** Port pressure gauge in HPU gauge panel while stroking the pump controller to full stroke **B** Port (nominally set at 2500 psig)

Record pressure here: _____ psig

6.2.3.5 *Open Loop Pump Relief Setting* - read auxiliary pressure gauge on HPU gauge panel (nominally set at 3000 psig)

Record pressure here: _____ psig

6.2.3.6 *Return Pressure Setting* - read return pressure gauge on HU gauge panel (25 psig maximum)

Record pressure here: _____ psig

6.3 LARS (A-FRAME, UMBILICAL WINCH, LEVELWIND) TESTS

6.3.1 FTHE Manual Controls Functional Verification Test

The following procedures are utilized to verify the proper function of the FTHE LARS manual controls and verification of full range of motion.

NOTE: These procedures should be performed prior to reeving the umbilical through the A-Frame Swing Frame and Docking Cursor.

Initial for proper function

6.3.1.1 Power up HPU and verify that all hydraulic connections are leak free.

6.3.1.2 Make sure all personnel are clear of the LARS system moving parts.

6.3.1.3 Ensure docking cursor is attached with A-Frame directly overhead.

6.3.1.4 Stroke Cursor Lift Winch Directional Control Valve (DCV) in the Haul-in position and verify the Cursor starts to lift. Continue to haul-in until Cursor docks and latch indicators move to closed position.

6.3.1.5 Stroke the docking head latch DCV to the closed position.

6.3.1.6 Stroke Docking head DCV in the swing in position and verify the docking head moves in that direction. Allow the system to travel its full range of motion and ensure there are no interference problems.

6.3.1.7 Stroke Docking head DCV in the swing out position and verify the docking head moves in that direction. Allow the system to travel its full range of motion and ensure there are no interference problems.

6.3.1.8 Stroke A-Frame Luffing DCV in the luff out position and verify the LARS moves in that direction. Allow the system to travel its full range of motion to stops and ensure there are no interference problems.

6.3.1.9 Stroke Cursor Lift Winch DCV in the Haul-in position to relieve the load on the latches and move the docking head latch switch to the "Unlatch" position.

6.3.1.10 Stroke the docking head latch DCV to the open position and ensure the latches fully open and latch indicators move to the open position.

6.3.1.11 Stroke Cursor Lift Winch DCV in the Pay-out position and verify the cursor lift winches move in that direction. Lower cursor as far as practical dockside (e.g.: don’t allow it to touch down on bottom).

6.3.1.12 Stroke A-Frame Luffing DCV in the luff in position and verify the LARS moves in that direction. Luff A-Frame to full inboard position.

6.3.2 A-Frame Static Lift and Docking Head Latch Test

The following procedures are utilized to verify the docking head latches perform properly and will not release the cursor while under load, to check cursor lift winches are fully operational and to load check the cursor as well as latches.

WARNING

A-Frame load tests involve operating equipment to raise, lower, and move heavy equipment. Death, injury, or equipment damage is possible if not done safely. All personnel must be aware of action to be taken in order to maintain a safe operation. FTHE Operators and the Deck Leader should be the only persons in the area around A-Frame during test.

Test Shape Connection Prerequisite

6.3.2.1 Verify A-Frame is positioned with Cursor latched in Swing Frame and aligned directly over Test Shape.

Initial for proper function

6.3.2.2 Power up both HPU #1 & #2 motors and open BV-1 to BV-4.

6.3.2.3 Haul in on the cursor winches to relieve the load on the latches, and move the docking head latch switch to the "Unlatch" position.

6.3.2.4 Lower the cursor down onto Test Shape loaded to weigh 40,500 lbs. Visually check for proper cursor latching to Test Shape.

6.3.2.5 Ensure all personnel are clear and then slowly haul in cursor winches.

6.3.2.6 Raise the Test Shape approximately one foot off the aft deck and hold in this position for 10 minutes.

6.3.2.7 Haul in with cursor winches until Cursor docks and latch indicators move to closed position.

6.3.2.8 Stroke the docking head latch DCV to the closed position.

6.3.2.9 Pay out the cursor winches slightly to allow docking head latches to take the load. Hold this position for 10 minutes.

6.3.2.10 Haul in on the cursor winches to relieve the docking head latches of load and then hold the latch switch in the "Open" position.

6.3.2.11 Payout on the cursor winches when latch indicators show unlatched.

6.3.2.12 Lower Test Shape to deck, ensuring soft touchdown.

6.3.2.13 Pay out the cursor winches until just slack and unlatch cursor at DCV station (hold for 15 count). Deck Leader to confirm cursor unlatched.

6.3.2.14 Haul in with cursor winches until Cursor docks and latch indicators move to closed position.

Secure equipment if the A-Frame Luffing Test will not be performed directly afterwards.

6.3.3 A-Frame Luffing Test

A dynamic load test is required on the A-Frame Assembly prior to commencing normal FTHE operations. The A-Frame Assembly luffing load test is performed while vessel is dockside using Test Shape with load of 40,500 lbs. The Test Shape is to be placed on the aft deck centered under the A-Frame Assembly when the A-Frame Assembly is in the luffed in position.

WARNING

LIFTING AND MOVING HAZARDS! A-Frame load tests involve operating equipment to raise, lower, and move heavy equipment. Death, injury, or equipment damage is possible if not done safely. All personnel must be aware of action to be taken in order to maintain a safe operation. FTHE Operators and the Deck Leader should be the only persons in the area around A-Frame during test.

Initial for proper function

6.3.3.1 Power up both HPU #1 & #2 motors and open BV-1 to BV-4.

6.3.3.2 Enable Swing Frame.

6.3.3.3 Haul in on the cursor winches to relieve the load on the latches, and move the docking head latch switch to the "Unlatch" position.

6.3.3.4 Lower the cursor down onto Test Shape loaded to weigh 40,500 lbs. Visually check for proper cursor latching to Test Shape.

6.3.3.5 Ensure all personnel are clear and then slowly haul in cursor winches.

6.3.3.6 Haul in with cursor winches until Cursor docks and latch indicators move to closed position.

6.3.3.7 Stroke the docking head latch DCV to the closed position.

6.3.3.8 Pay out cursor winches slightly for docking head latches to take load.

6.3.3.9 Disable Swing Frame.

6.3.3.10 Luff the A-Frame fully outboard to stops and hold for 10 minutes.

6.3.3.11 Luff the A-Frame fully inboard and hold for 10 minutes.

6.3.3.12 Luff the A-Frame to center position (legs perpendicular to deck)

6.3.3.13 Haul in on the cursor winches to relieve the docking head latches of load and then hold the latch switch in the "Open" position.

6.3.3.14 Payout on the cursor winches when latch indicators show unlatched.

6.3.3.15 Lower Test Shape to deck, ensuring soft touchdown.

6.3.3.16 Pay out the cursor winches until just slack and unlatch cursor at DCV station (hold for 15 count). Deck Leader to confirm cursor unlatched.

6.3.3.17 Haul in with cursor winches until Cursor docks and latch indicators move to closed position.

6.3.3.18 Secure all equipment.

6.4 HEAVE COMPENSATOR TESTS

6.4.1 HC Relief Valve Settings and Verification

6.4.1.1 HC System Nominal Relief Pressure Settings

The HC System nominal relief pressure settings are listed in Table 17.

Table 17: HC System Nominal Relief Pressure Settings

DESCRIPTION	PRESSURE (PSI)
Standby Pressure Setting	300
Maximum Pressure Setting	3,000
Tank Overpressure Setting	5

6.4.1.2 LCI-90 Tension Reading vs. HC Accumulator Gas Pressure

The LCI-90 Tension Reading vs. HC Accumulator Gas Pressure chart is shown graphed in Figure 7 and selected individual tension values are listed in Table 18.

The tension reading is taken from either the Local Control Panel LCI-90 display or the Control Van Panel LCI-90 display and represents, that for a given load at the A-Frame Assembly (vehicle/package and umbilical cable weight), the HC accumulator gas pressure required to offset the total weight.

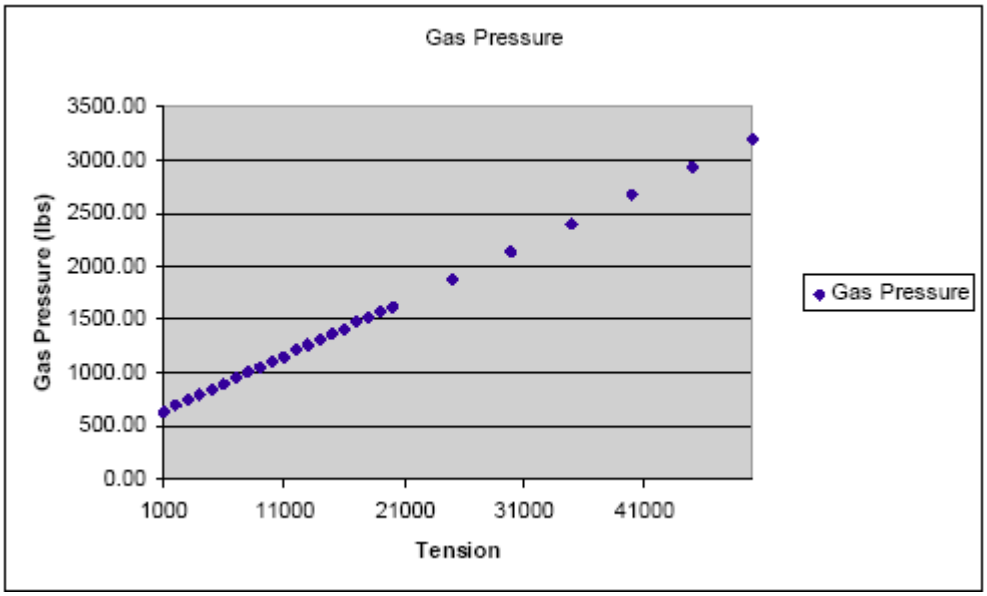

Figure 7: LCI-90 Tension Reading vs. HC Accumulator Gas Pressure

Table 18: LCI-90 Tension Reading vs. HC System Accumulator Gas Pressure

TENSION READING (lbs)	ACCUMULATOR GAS PRESSURE (psig)*
7,000	950
8,000	1,000
9,000	1,050
10,000	1,100
11,000	1,150
12,000	1,200
13,000	1,250

14,000	1,300
15,000	1,350
16,000	1,425
17,000	1,475
18,000	1,525
19,000	1,575
20,000	1,625
25,000	1,875
30,000	2,150
35,000	2,400
40,000	2,675
45,000	2,925
50,000	3,200

** Pressure rounded to nearest 25 psig*

6.4.2 Heave Compensator Functional Tests

HC Passive Functional Test

The following procedures are to verify proper function of Heave Compensator.

6.4.2.1 Ensure the control system is in passive mode (e.g. no computer control).

6.4.2.2 Set initial HC charge pressure on the system to 500 psig.

6.4.2.3 Assure area is clear of personnel and haul in on the umbilical winch until the heave compensator is compressed to half its stroke. Expected maximum line pull at 3,000 psig is **28,300 lbs**.

6.4.2.4 Record resulting load at associated set gas pressure (500 psig) in Table 19.

6.4.2.5 Repeat steps 6.4.2.2 and 6.4.2.4 while incrementing the pressure up and then back down according to “Set Gas Pressure” in Table 19. Record resulting load at associated set gas pressure.

Table 19: HC Passive Functional Test Results

LOAD STEP NUMBER	SET GAS PRESSURE	RESULTING LOAD (lbf)
1	500 psig	
2	1000 psig	
3	1500 psig	
4	2000 psig	
5	2500 psig	
6	3000 psig	
7	2500 psig	
8	2000 psig	
9	1500 psig	
10	1000 psig	
11	500 psig	

RECORDED BY: WITNESSED BY:

6.4.3 Docking Head Tension Control

The purpose of testing Docking Head Tension control is to verify the operation of Docking Head Tension control. The expected outcome is decreased tension variability due to wave action with the average HC Flying Head Assembly position maintained at mid-stroke. To perform Docking Head Tension testing, perform the following steps:

a. Operate FTHE in the Auto Passive mode so that the vehicle is at a depth of approximately 100 feet.

b. At the Control Van Panel, select the Heave Compensator position for display.

c. At the Control Van Panel, begin data logging.

d. At the Control Van Panel, select Docking Head Tension mode.

e. Initiate the Active "Docking Head Tension" mode.

f. Allow the FTHE system to operate for approximately 3 minutes.

g. At the Control Van Panel, transition to Auto Passive mode.

h. At the Control Van Panel, stop data logging.

i. Review recorded tension data to ensure tension control in the Docking Head Tension mode is less variable (±1,500 lbs of actual line tension) than in Auto Passive mode.

RECORDED BY: WITNESSED BY:

Table 20: Datalog Control Sheet for Docking Head Tension Control

DATALOG START TIME	FLOWP	DH TENSION P	DH TENSION D	CENTERING PID P	CENTERING PID I	CENTERING PID D	COMMENTS
-------	3.0E-3	8.395E-4	4.39E-4	0.0015	0.00025	0.0	Default values

6.5 TEST SHAPE CONTROL TESTS

6.5.1 Test Shape (ROV) Tension Control

The purpose of testing Test Shape Tension control is to verify the operation of "ROV Tension" control. The expected outcome is decreased tension variability due to wave action with the HC Flying Head Assembly position maintained at 25% to 75% of total travel.

Prerequisites:

- The following operations shall be performed in moderate seas in both a short scope and long scope configuration.
- The following operations shall only be performed when Active Docking Head Tension Mode is performing correctly.

Possible Outcomes:

- Loss of performance in tension control or centering ability of heave compensator with both inputs used for control.

Test Sequence:

To perform "ROV Tension" calibration testing, perform the following steps:

a. Replace the appropriate Test Shape Tension Control gains with the Active Docking Head Tension Mode gains.

b. Operate the FTHE in Auto Passive mode so that the vehicle is in a short scope deployment.

c. At the Control Van Panel, select the Heave Compensator Position for display.

d. At the Control Van Panel, begin data logging.

e. At the Control Van Panel, pre-select "ROV Tension" mode.

f. Initiate the Active "ROV Tension" mode.

> **CAUTION**
>
> Do not allow the HC Flying Head to drift below 15% or above 85% of its total stroke. If the HC reaches these extremities, the operator shall place the system in passive mode. If operation permits, transition to passive mode shall be used. If damage to hardware is possible in the current state, winch joystick motion will immediately put the system into passive mode.

g. After approximately one minute, when the heave compensator is approaching it's upper or lower bound, switch to Active ROV Tension Control Mode.

h. Allow the FTHE system to operate for approximately 3 minutes.

i. At the Control Van Panel, transition to Auto Passive mode.

j. At the Control Van Panel, stop data logging.

k. Review recorded tension data to ensure tension control in "ROV Tension" mode is less variable (±1,500 lbs of actual line tension) than in the Auto Passive mode.

RECORDED BY: WITNESSED BY:

Table 21: Datalog Control Sheet for Test Shape (ROV) Tension Control

DATALOG START TIME	FLOWP	ROV TENSION P	ROV TENSION D	CENTERING PID P	CENTERING PID I	CENTERING PID D	COMMENTS
-------	3.0E-3	8.395E-4	8.78E-4	0.0015	0.00025	0.0	Default values

6.5.2 Test Shape (ROV) Altitude Control

The purpose of testing Test Shape Altitude control is to verify the operation of "ROV Altitude" control. The expected outcome is to control the vehicle altitude above the sea floor in response to surface wave action or change in operator directed commands.

Prerequisites:

- The following operations shall be performed in moderate seas in both a short scope and long scope configuration.
- The following operations shall not be performed if Docking Head Tension Control Mode is not operating properly.
- Set the "altitude error to turn on winch" to 1.5 times the test shape movement seen during the passive mode testing.

Possible Outcomes:

- If an operator directed change in altitude occurs, FTHE will respond to place the test shape at the commanded altitude. Once the commanded altitude has been reached, that position should be maintained within ±4 inches.

Test Sequence:

CAUTION
If large displacements in test shape altitude occur, transition to passive mode. If damage to hardware is possible in the current state, winch joystick motion will immediately put the system into passive mode.

NOTES: The Umbilical Winch Drive will haul umbilical in or pay out while maintaining Test Shape altitude.

Ensure the Test Shape operator is at his station to observe the test shape altitude to alert the FTHE crew of decreasing vehicle altitude.

During execution of Test Shape Altitude control testing there should be no commanded winch movement, ordered altitude changes, or Test Shape position changes unless requested by the FTHE Test Director.

Estimated test duration 30 minutes per iteration.

To perform "ROV Altitude" calibration testing, perform the following steps:

a. Operate FTHE in Auto Passive mode so that the vehicle is 40 ft from the sea floor.
b. At the Control Van Panel, select the Vehicle Altitude for display.
c. At the Control Van Panel, begin data logging.
d. At the Control Van Panel, select Active "ROV Altitude" mode.
e. Wait approximately 1 minute and ensure that Test Shape altitude is being maintained at 40 feet, ± 4 inches (average).

f. Change the commanded altitude to 30 ft.

g. Wait approximately 1 minute and ensure that the vehicle altitude is being maintained at 30 feet, ± 4 inches (average).

h. Change the commanded altitude to 40 ft.

i. Wait approximately 1 minute and ensure that the vehicle altitude is being maintained at 40 feet, ± 4 inches (average).

j. At the Control Van Panel, stop data logging.

k. At the Control Van Panel, begin data logging for ordered altitude testing.

l. At the Control Van Panel, select Active "ROV Altitude" mode.

m. Wait approximately 1 minute and ensure that vehicle altitude is being maintained at 40 feet.

n. Request an ordered altitude change at the console to decrease the altitude approximately 10 feet.

o. Wait approximately 1 minute and ensure that the Test Shape altitude is being maintained at 30 feet.

p. Request an ordered altitude change at the console to increase the altitude approximately 10 feet

q. Wait approximately 1 minute and ensure that the vehicle altitude is being maintained at 40 feet.

r. At the Control Van Panel, stop data logging.

s. At the Control Van Panel, transition to the Auto Passive mode.

t. Review recorded altitude data to ensure that the Test Shape altitude is being maintained.

u. If the altitude is not being held to within +/- 4 inches, change the proportional and differential gains in the Altitude control loop to improve the performance.

v. Repeat steps d.) through s.) until the exit criteria is met.

RECORDED BY: WITNESSED BY:

Table 22: Datalog Control Sheet for Test Shape (ROV) Altitude Control

DATALOG START TIME	FLOWP	ROV TENSION P	ROV TENSION D	CENTERING PID P	CENTERING PID I	CENTERING PID D	COMMENTS
-------	3.0E-3	8.395E-4	8.78E-4	0.0015	0.00025	0.0	Default values

6.5.3 Test Shape (ROV) Bottom Keeping Control

The purpose of testing Test Shape Bottom Keeping control is to verify the operation of “ROV Bottom Keeping” control. The expected outcome is to control the heave compensator on the vehicle (maintain 0.0 ± 8.0 inches) to prevent vehicle movement off the sea floor in response to surface wave action.

Prerequisites:

- The following operations shall be performed in moderate seas in both a short scope and long scope configuration.

Possible Outcomes:

- The test shape compensator is maintained at ±11 inches regardless of surface wave action.

Test Sequence:

To perform ROV Altitude calibration testing, perform the following steps:

a. Operate the FTHE in Auto Passive mode so that Test Shape is 40 ft from the sea floor.

b. At the Control Van Panel, select “ROV Altitude” for display.

c. At the Control Van Panel, begin data logging.

d. At the Control Van Panel, select "Active ROV Altitude" mode.

e. Wait approximately 1 minute and ensure that vehicle altitude is being maintained at 40 feet.

f. Decrease “ROV Altitude” command to slowly lower Test Shape to 4 foot altitude.

CAUTION
If large displacements in Test Shape compensator position occur, switch to “ROV Altitude” mode and lift off to an altitude of 20 feet.

g. At the Control Van Panel, select "Active Bottom Keeping" mode.

h. Wait approximately 3 minutes and ensure that the vehicle heave compensator is being maintained at ±11 inches.

i. At the Control Van Panel, stop data logging.

j. Use the Control Van Panel joystick to raise the Test Shape off the ocean floor to a safe operating altitude of about 40 feet.

k. At the Control Van Panel, transition to the “Auto Passive” mode.

l. Review recorded compensator position data to ensure that the Test Shape compensator position is being maintained at ±8.0 inches.

m. Adjust proportional gain on Altitude control loop depending on the test results.

n. Repeat steps c.) through m.) until the exit criteria is met.

RECORDED BY: WITNESSED BY:

Table 23: Datalog Control Sheet for Test Shape (ROV) Bottom Keeping Control

DATALOG START TIME	FLOWP	DH TENSION P	DH TENSION D	BOTTOM KEEPING P	BOTTOM KEEPING I	BOTTOM KEEPING D	COMMENTS
-------	3.0E-3	8.395E-4	8.78E-4	0.0015	0.00025	0.0	Default values

FIELD TEST HANDLING EQUIPMENT

END-TO-END TEST PLAN

Naval Facilities Engineering Service Center
OCEAN ENGINEERING DIVISION
1100 23rd Avenue
Port Hueneme, CA
93043-4370

DRAFT Date: 25 July 2007

TABLE OF CONTENTS

1.0 INTRODUCTION 1
1.1 BACKGROUND 1
1.2 OBJECTIVE 1
1.3 GENERAL INFORMATION 1
1.4 SAFETY AWARENESS 1
2.0 REFERENCES 2
3.0 PERSONNEL AND RESPONSIBILITIES 2
3.1 PROJECT MANAGER 3
3.2 TEST DIRECTOR 3
3.3 DECK LEADER 3
3.4 SAFETY OBSERVER 3
3.5 ADDITIONAL PERSONNEL 3
4.0 END-TO-END TEST OVERVIEW 4
5.0 FIELD TEST HANDLING EQUIPMENT MOBILIZATION 4
5.1 DECK LAYOUT 4
5.2 MOBILIZATION SUPPORT EQUIPMENT 5
5.3 HAZARDOUS MATERIALS 6
5.4 PREREQUISITE ACTIVITIES 6
5.5 FASTENERS & SPECIFICATIONS REQUIRED FOR DECK INSTALLATION 7
5.6 ELECTRICAL INTERCONNECTION HOOK-UPS 7
5.7 PNEUMATIC INTERCONNECTION HOOK-UPS 12
5.8 HYDRAULIC INTERCONNECTION HOOK-UPS 16
5.9 COOLING WATER INTERCONNECTION HOOK-UPS 21
5.10 FTHE START-UP & SHUT-DOWN PROCEDURES 22
6.0 END-TO-END FUNCTIONAL TESTS 30
6.1 CONTROLS AND INDICATORS FUNCTIONAL VERIFICATION 30
6.2 HYDRAULIC POWER UNIT PRESSURE SETTINGS VERIFICATION 34
6.3 LAUNCH & RECOVERY SYSTEM (WINCH, LEVELWIND, A-FRAME) TESTS 36
6.4 HEAVE COMPENSATOR TESTS 40
APPENDIX A – SAFETY PLAN A-1
APPENDIX B – PLAN OF ACTIONS & MILESTONE SCHEDULE B-1

List of Tables

Table 1: Test Personnel Contact List 2
Table 2: FTHE Component List 5
Table 3: End-To-End Assembly Support Equipment 5
Table 4: Tools and Test Support Equipment 6
Table 5: List of Activities Required Prior to Mobilizing the FTHE 6
Table 6: Fasteners & Specifications for Deck Installation 7
Table 7: FTHE Electrical Enclosure Labels and Locations 8
Table 8: FTHE Electrical Cable Connections 8
Table 9: Electronics Cabinet Subassembly Cable Connections 11
Table 10: HC Gas Reclamation Nitrogen Hose Connections 13
Table 11: Boost Accumulator Gas Pressure Charge for A-Frame Load Range 15
Table 12: A-Frame Hydraulic Hose Interconnection 18
Table 13: Umbilical Winch / Levelwind Hydraulic Interconnection 18
Table 11: FTHE Upper Case Drain Locations 18
Table 15: Cooling Water Hose Connections 21
Table 16: FTHE Prestart Inspection Sheets (Unpowered) 22
Table 17: FTHE System Power-Up Procedures 26
Table 18: FTHE System Post Power-Up Inspection Sheet 28
Table 19: FTHE System Shut-Down Procedures 29
Table 20: HPU Hydraulic System Initial Pressure Settings 34

List of Figures

Figure 1: End-To-End Test Deck Layout 4
Figure 2: FTHE Electrical Cable Paths & Connection Locations 9
Figure 3: HC Assembly Gas Bottle Rack 13
Figure 4: FTHE Hydraulic Hose Paths & Connection Locations 17
Figure 5: HC Lower Head Assembly 40
Figure 6: HC Flying Head Assembly – Top View 41

Acronyms and Abbreviations

Acronyms and abbreviations used in the test plan are listed as follows.

Acronym or Abbreviation	Definition
AC	Accelerometer
ACC	Accumulator
AF	A-Frame
BV	Ball Valve
CI	Computer Interface
COMP	Compensator
COND.	Conductor
CONOPS	Conduct Of Operations
CVP	Control Van Panel
CYL	Cylinder
DAQ	Data Acquisition
DCV	Directional Control Valve ("DCV Station" -> A-Frame Local Control)
DD	Dynacon Drawing
DH	Docking Head
DWG	Drawing
DWT	Deep Water Training
ENC	Enclosure
FAT	Factory Acceptance Test
FTHE	Field Test Handling Equipment
GMB	Gear Motor Box
GUI	Graphical User Interface
HC	Heave Compensator
HDR	Header
HPU	Hydraulic Power Unit
JB or J-Box	Junction Box
LARS	Launch and Recovery System
LG	Liquid Gauge
LW	Levelwind or Level Wind
MSDS	Material Safety Data Sheet
NEMA	National Electrical Manufacturers Association (Standard reference)
NFESC	Naval Facilities Engineering Service Center
NI	National Instruments
PCB	Printed Circuit Board
PDS	Power Distribution System
PPE	Personal Protective Equipment
SC	Signal Conditioner
SWL	Safe Working Load
TB	Terminal Board
UPS	Uninterruptible Power Supply
UW	Umbilical Winch

1.0 INTRODUCTION

1.1 BACKGROUND

The Field Test Handling Equipment (FTHE) was developed to provide support for the Deep Water Training (DWT) program. The ongoing support efforts include preparing the FTHE system to be sustained in a ready state for future at-sea operations. Periods of equipment inactivity and storage time are expected to be about a year between deployments. Therefore pre-cruise preparations need to include system calibration and integration tests to ensure operational readiness.

1.2 OBJECTIVE

Prior to the FTHE Calibration Cruise, the FTHE *"End-to-End"* testing shall be performed. The objectives of the End-to-End Tests are:

- To validate that recent system modifications and upgrades were performed successfully
- To ensure operational functionality of the FTHE system
- Provide personnel training and familiarization with equipment
- Allow for cost effective testing compared to at-sea operations

The test site shall be located at NFESC building 1393. The equipment will be installed on the concrete apron in front of the building using the same deck arrangement as if deployed on support ship. If any component or system integration problem(s) are discovered during testing, the test approach will provide adequate time to trouble shoot and resolve those problems in advance of the following FTHE Calibration Cruise.

1.3 GENERAL INFORMATION

This document provides information required for mobilizing, operating, and testing the FTHE equipment after storage periods or following any significant modifications that would affect performance. The *FTHE Installation, Operation, and Maintenance Manual* [Reference A)] should be reviewed for specific system troubleshooting, repair, and maintenance information.

The following system integration test procedures were written with the assumption that the technicians who will be operating equipment possess prior experience in the use of umbilical handling systems and thereby have a basic understanding of hydraulic and electrical systems.

A description of the electrical, hydraulic, and pneumatic considerations for mobilization are provided, as well as lists of various initial pressure settings/readings expected during operation of the FTHE. Also provided are lists of recommended parts and specifications required for deck installation.

1.4 SAFETY AWARENESS

Safety is the responsibility of all personnel involved in the testing. The safety precautions set forth in NFESCINST 5100.11J as well as the FTHE End-to-End Test Safety Plan (Appendix A) will be observed during performance of this End-To-End Test, including equipment set-up and break-down activities.

Major components are heavy and should be carefully handled. This test plan does not contain detailed descriptions of safety principles, standard workshop practices, or service operations. It does contain specific warnings and cautions about using specific service methods that could cause injury to personnel or damage equipment. The fact that no warnings or cautions are given for any specific service methods does not mean that there is not a safety risk involved.

This test document provides warnings, caution, and note prompts for safety awareness when deemed necessary due to a particular operation or situation. The following labels are used to identify potential hazards and to describe safety procedures:

WARNINGS
Identify situations that are potentially hazardous or lethal to personnel.

CAUTIONS
Identify situations that are potentially hazardous to equipment or material.

NOTES are used to emphasize information provided in test or procedures.

2.0 REFERENCES

A) FTHE Installation, Operation, and Maintenance Manual, General Dynamics Document Number A128297, December 14, 2005

B) Factory Acceptance Test Procedures for the (FTHE) A-Frame System, Dynacon Document Number 0707-0009-01

C) Factory Acceptance Test Procedures for the (FTHE) Heave Comp. System, Dynacon Document Number 0707-0009-02

3.0 PERSONNEL AND RESPONSIBILITIES

The following table lists personnel necessary for the End-to-End Test operations.

Table 1: Test Personnel Contact List

Responsibility	Name	Organization	Telephone #
Project Manager	Jeff Kilpatrick	NFESC	(805) 982-1002 Office (805) 402-0250 Cell
Assistant Project Manager	Tim Petro	NFESC	(805) 982-5577 Office (805) 345-6234 Cell
Test Director	Dan Powell	GPA	(805) 407-9493 Cell
Assistant Test Director	Doug Davis	GD	(413) 822-5969 Cell
Deck Leader	Luke Morehouse	GPA	(805) 390-6877 Cell
Safety Observer	Vince Gerwe	GPA	(805) 901-8254 Cell
Equipment Operator	Gary Standefer	GPA	(805) 377-3163 Cell
Equipment Operator	Bill McCormick	GD	(336) 420-2716 Cell
Control Van Operator	James Meza	NFESC	(818) 970-9825 Cell
Control Van Operator	David Liparoto	GPA	(805) 320-8885 Cell
Control Van - Software	Tom Harris	GD	(413) 494-4043

3.1 PROJECT MANAGER

The *Project Manager* (PM) will be responsible for all operations during the tests, including supervising NFESC staff and contracted personnel. The Project Manager will also assist the Safety Observer with investigation of any accidents and preparation of related reports.

3.2 TEST DIRECTOR

The *Test Director* has the primary responsibility of executing the End-to-End Test operations in a manner that places emphasis on safety. The Test Director is responsible for overseeing planning and development of the Test Plan. Both Project Manager and the Test Director assure the project operations are being performed in a manner consistent with the Safety Plan.

3.3 DECK LEADER

The *Deck Leader* is responsible for directing all deck procedures, including equipment operations of the A-frame, crane, winches, etc. The Deck Leader is responsible for ensuring that deck operations are run safely within applicable regulations and has the duty to halt operations when hazardous conditions exist. Specific areas of responsibility for the Deck Leader include: review the Test Plan with Safety Plan, direct the deck operations with primary emphasis on proper load handling procedures; and assist with investigations of accidents, to include preparation and review of reports involving deck operation safety issues.

3.4 SAFETY OBSERVER

The *Safety Observer* will observe all operational actions of personnel, equipment, and machinery in order to maintain a safe working environment. The Safety Observer has the primary responsibility to review operational procedures and to observe operations, with the primary focus on identifying unsafe conditions that may be unnoticed during the course of deck operations. If unsafe conditions are identified, the Safety Observer has responsibility to immediately stop operations and then bring these issues to the attention of the Test Director and Deck Leader for appropriate corrective measures.

3.5 ADDITIONAL PERSONNEL

Additional personnel will be involved with operations including the following:

- Launch & Recovery Equipment Operator
- Heave Compensator Operator
- Control Van Operators

Note: Personnel assigned with technician duties shall be properly trained and qualified to use the equipment necessary to perform required operations. Service personnel supporting operations shall understand the specific components they work on, including: electrical, mechanical, and hydraulic, as well as basic service and repair procedures.

4.0 END-TO-END TEST OVERVIEW

The following provides a brief overview of the major test components that were developed from References A, B & C:

- Field Test Handling Equipment Mobilization
- System Electrical Continuity Checks
- Controls and Indicators Functional Verification
- Hydraulic Power Unit Pressure Settings Verification
- FTHE Manual Controls Functional Verification Test
- A-Frame Docking Head Latch Test
- A-Frame Assembly Luffing Test
- Heave Compensator Umbilical Reeve Training
- Heave Compensator No-Load Functional Test

5.0 FIELD TEST HANDLING EQUIPMENT MOBILIZATION

5.1 DECK LAYOUT

Installation and assembly of the Field Test Handling Equipment (FTHE) will be accomplished on the concrete deck in front of SRB building at the Naval Base Ventura County (NBVC), Port Hueneme, CA. Mobilization will consist of assembling all of the equipment and hardware to be used during this operation. The major equipment to be located and integrated include: the FTHE A-Frame, winch & level wind (LW), heave compensator (HC), hydraulic power unit (HPU), Test Shape, Control Van, FTHE/ESAC power distribution system (PDS), and two 400KW generators. Figure 1 shows a deck layout of the major equipment being mobilized for simulating the deck layout on the *M/V Independence* support ship.

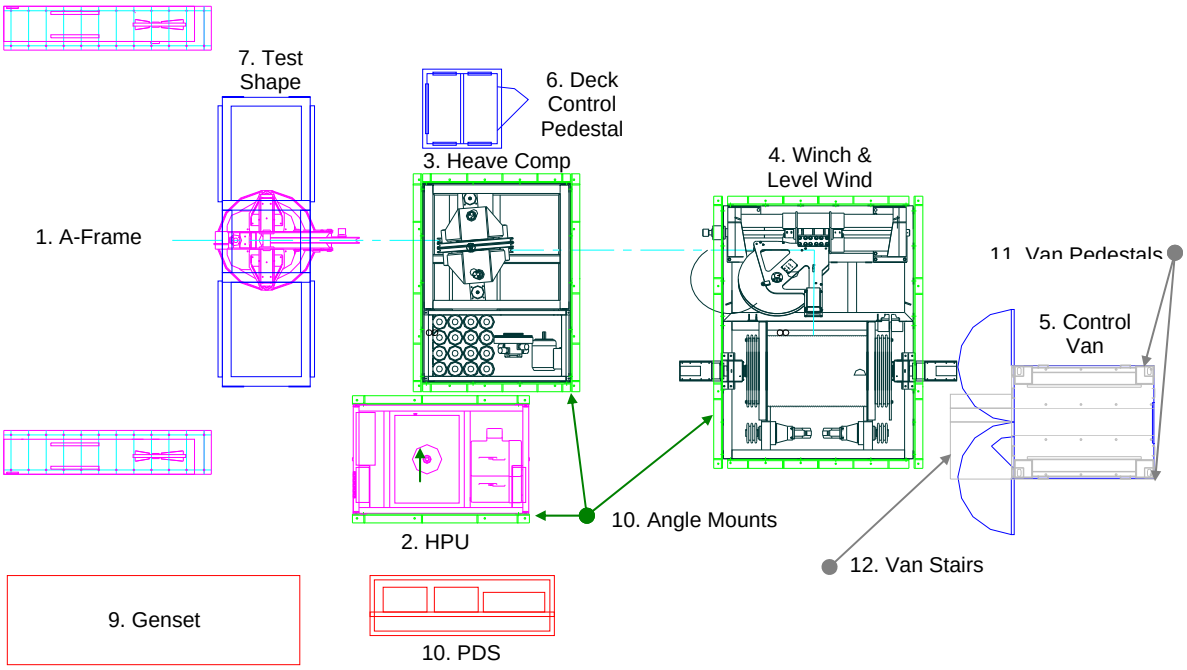

Figure 1: End-To-End Test Deck Layout

Table 2 lists the FTHE components, item numbered to correspond to Figure 1.

Table 2: FTHE Component List

ITEM	EQUIPMENT	SIZE	WEIGHT (approx.)
1.	A-Frame (AF)	142” L x 320” W	68,000 lbs
2.	Hydraulic Power Unit (HPU)	120” L x 75” W	13,100 lbs
3.	Heave Compensator (HC)	108” L x 75” W	34,340 lbs
4.	Umbilical Winch (UW) & Level Wind (LW)	130” L x 173” W	32,200 lbs (w/ umbilical)
5.	Control Van	95.5” L x 77” W	25,000 lbs
6.	Deck Control Pedestal	54” L x 54” W	1,000 lbs
7.	Test Shape	197” L x 59” W	11,700 lbs (w/o lead)
8.	Genset (CAT Model XQ400-3456)	200” L x 61” W	20,500 lbs
9.	Power Distribution System (PDS)	126” L x 41” W	1,950 lbs
10.	Deck Angle Mounts	¾” x 6” x 6”	3,450 lbs
11.	Van Pedestals	98” L x 30” W	500 lbs/each
12.	Van Stairs	58” L x 36” W	200 lbs/each

5.2 MOBILIZATION SUPPORT EQUIPMENT

Equipment listed in Table 3 is for supporting the End-To-End Test mobilization.

Table 3: End-To-End Assembly Support Equipment

EQUIPMENT	QTY	COMMENTS
Truck Crane, 140-ton	1	Position equipment into deck layout on concrete apron
Forklift, 30K minimum	1	Move equipment and accessories in place

Detailed procedures for mobilization and demobilization of FTHE are listed in the *“FTHE Installation, Operation, and Maintenance Manual”* A128297, 12-12-2005. See Volume 2, Chapters 9 & 10. Relevant excerpts from that documentation will be included and modified where needed for this End-To-End Test plan.

The following sections describe prerequisite activities, tools and test/support equipment, unpacking/unloading/inspecting operations, and installation procedures for the FTHE concrete apron installation.

A list of tools and test/support equipment required to perform troubleshooting, corrective maintenance, mobilization, and demobilization procedures for the FTHE is provided in Table 4. These tools are supplied with the FTHE and are identified to aid in the required maintenance of the FTHE.

Table 4: Tools and Test Support Equipment

DESCRIPTION	MODIFIER	QTY	PURPOSE
JTK®-93 Tool Kit	Electro-Mechanical Service Kit, Jenson Tools	1 Each	Maintenance
ODTR Kit	Fiber Optic Test Kit	1 Each	Testing
Adjustable Wrenches	Standard Style, 6", 12" and 24"	1 Each	Maintenance
Open End Wrench	Combination 15/16" x 1"	2 Each	Maintenance
Open End Wrench	Combination 1" x 1-1/8"	2 Each	Maintenance
Open End Wrench	Combination 1-1/16" x 1-1/4"	2 Each	Maintenance
Open End Wrench	Combination 1-5/16" x 1-1/2"	2 Each	Maintenance
Ratchet Web Assemblies	2-Piece Ratchet Web Assemblies w/Flat-Hook Ends, 5,000 lbs	4 Each	Secure Spare Parts Boxes
Multimeter	3-1/2 Digit, True RMS, 1000 AC/DC Voltage, 10 A	1 Each	Maintenance
Temperature Label	Stick-on with 100 -200ºF range	2 Each	Calibration
Flash Light	Battery Operated	2 Each	Maintenance
Test Cable	Simulate umbilical ~1.4” OD	100’	Training

5.3 HAZARDOUS MATERIALS

The tasks to be accomplished during this testing may require the use of small amounts of common material defined as hazardous, such as lubricants, solvents, and paint. The intended use of any such hazardous material will be kept to a bare minimum. All hazardous materials will be clearly marked and handled separately, in accordance with appropriate storage and handling procedures.

NBVC HAZMAT pick-up and storage may be arranged by calling (805) 982-3677.

5.4 PREREQUISITE ACTIVITIES

Activities that must be accomplished prior to mobilizing is provided in Table 5.

Table 5: List of Activities Required Prior to Mobilizing the FTHE

ACTIVITY	QTY	PURPOSE	WHEN
Inspect Shipboard Spares	2 Boxes (Sea 1 & 2)	Verify items and quantity	3 months prior
Test Hydraulic Oil	2 Kits	Check the quality of the hydraulic oil in the HPU & HC Replace if tests indicate replacement is necessary.	1 month prior
Order Hydraulic Oil	550 gallons	Replacement oil for all FTHE components (if required)	1 month prior
Order Nitrogen	11 Bottles	9 for Bottle Rack plus 2 spares	1 month prior
Tag and label verification	As needed	Verify all tags and labels are present. Replace as necessary	1 month prior

5.5 FASTENERS & SPECIFICATIONS REQUIRED FOR DECK INSTALLATION

The required hardware and associated torque values to install the FTHE units to the concrete apron are provided in Table 6.

Table 6: Fasteners & Specifications for Deck Installation

REQUIREMENT	LW TO UW	UW & LW TO BASE ANGLE	HPU TO BASE ANGLE	HC TO BASE ANGLE	A-FRAME FOOT TO BASE PL
Number of Hex Head Bolts	2	4	4	4	48 Total (24 Per Side)
No. of Hex Nuts	2	4	4	4	N/A
No. of SS Lock Washers	2	4	4	4	48
No. of SS Flat Washers	4	8	8	8	48
Bolt Description (Zinc Coated Cap Screw)	1-8 UNC x 3-½ " Lg	1-8 UNC x 2-½ " Lg	1-8 UNC x 2-½ " Lg	1-8 UNC x 2-½ " Lg	1-8 UNC x 3-½ " Lg
Fastener Material Grade	5 or Better	5 or Better	5 or Better	5 or Better	5 or Better
Torque Level (Lubricated)	489 ft-lbs	489 ft-lbs	489 ft-lbs	489 ft-lbs	489 ft-lbs
REQUIREMENT	**N/A**	**UW & LW ANGLE TO DECK**	**N/A**	**HC ANGLE TO DECK**	
Number of Hex Head Bolts		4		4	
No. of SS Lock Washers		4		4	
No. of SS Flat Washers		4		4	
Bolt Description (Zinc Coated Cap Screw)		3/4 -10UNC x 2-½ " Lg		3/4 -10UNC x 2-½ " Lg	
Fastener Material Grade		5 or Better		5 or Better	
Torque Level (Lubricated)		200 ft-lbs		200 ft-lbs	

5.6 ELECTRICAL INTERCONNECTION HOOK-UPS

After the FTHE System Assemblies are properly assembled and located per deck layout, the various interconnections (electrical, pneumatic, hydraulic, and cooling water) must be connected.

5.6.1 Electrical Considerations

Under normal operating conditions, the FTHE system poses no electrical hazards to personnel or equipment. However, the FTHE system does use voltages that are potentially lethal or hazardous should an accident or improper actions occur (See Appendix A - Safety Plan).

5.6.2 Electrical Connections

Electrical power cables for the FTHE System need to be laid out on the concrete apron and connected to their respective enclosures after FTHE installation.

The FTHE electrical enclosures have been assigned short acronyms for labeling and are listed for reference in Table 7.

Table 7: FTHE Electrical Enclosure Labels and Locations

LABEL	DESCRIPTION	LOCATION
ENC1	HPU Low Voltage Enclosure	HPU aft, starboard side
ENC2	Local Control Panel (Pedestal)	Deck Operator Van
ENC3	HPU High Voltage Enclosure	HPU aft, port side
ENC4	Levelwind Enclosure	LW port, forward side
ENC5	Control Van Panel (Remote)	Control Van electronics cabinet
ENC6	HPU Load Break Center Enclosure	HPU forward, starboard side
ENC7	HC Gas Intensifier Enclosure	HC starboard, aft side
ENC8	HC High Voltage Enclosure	HC aft, starboard side
ENC9	HC Low Voltage Enclosure	HC starboard, aft side
ENC10	Signal Conditioning Interface Enclosure	Control Van electronics cabinet
ENC11	A-Frame Accelerometer Enclosure	A-Frame Docking Head (top)
ENC12	Heave Compensator Accelerometer Enclosure	HC Flying Head
ECL13	A-Frame Load Pin J-Box	DCV Station, forward
ECL14	PDS Main Circuit Breaker Enclosure	PDS forward end
ENC15	PDS Transfer Switch Enclosure 2	PDS middle enclosure
ENC16	PDS Transfer Switch Enclosure 1	PDS aft end
ENC17	Test Shape Electronics Interface Enclosure	Control Van electronics cabinet
ENC18	NFESC Control Van Enclosure (break-out box)	Control Van aft, port side
ENC19	NFESC Control Van J-Box (slip ring cables)	Control Van aft, port side

Each cable connection is labeled according to the electrical enclosure origin and the electrical enclosure destination as listed in Table 8.

Table 8: FTHE Electrical Cable Connections

ORIGIN			DESTINATION			Cable Length (ft)
Enclosure	Conn.	Label (Cable #)	Enclosure	Conn.	Label (Cable #)	
ENC14 (PDS)	LI, L2, L3	**HPU PWR**	ENC6	P59/J59	**HPU PWR**	**140**
ENC1	J5/P5	(68)	ENC2	Hard Wired	(68)	75
ENC1	J51/P51	(1)	**ENC18** (ENC5)	P54/J54	(1)	90
ENC1	J41/P41	(3)	A-Frame JB-3	P2/J2	(3)	60
ENC1	J42/P42	(4)	ENC9	P39/J39	(4)	50
ENC1	J43/P43	(5)	ENC4	P1/J1	(5)	60
ENC1	J52/P52	(2)	**ENC18** (ENC10)	P55/J55	(2)	90
ENC4	Hardwired	ENC4	JB-6 (Drum Count)	P4/J4	P4/J4	—
ENC14 (PDS)	LI, L2, L3	**HC PWR**	ENC8	P60/J60	**HC PWR**	**140**
ENC9	J58/P58	(6)	**ENC18** (ENC10)	P53/J53	(6)	100
ENC9	J57/P57	(7)	**ENC18** (ENC5)	P56/J56	(7)	100
ENC13		(8)	**ENC18** (ENC5)		(8)	62
SR-2	J2		**ENC19** (ENC17)			
SR-2	J5		**ENC19** (ENC17)			
SR-1	J4		**ENC19** (ENC17)			
SR-1	J6		**ENC19** (ENC17)			
Genset		**PDS PWR**	**ENC15** (PDS TSW-2)		**PDS PWR**	

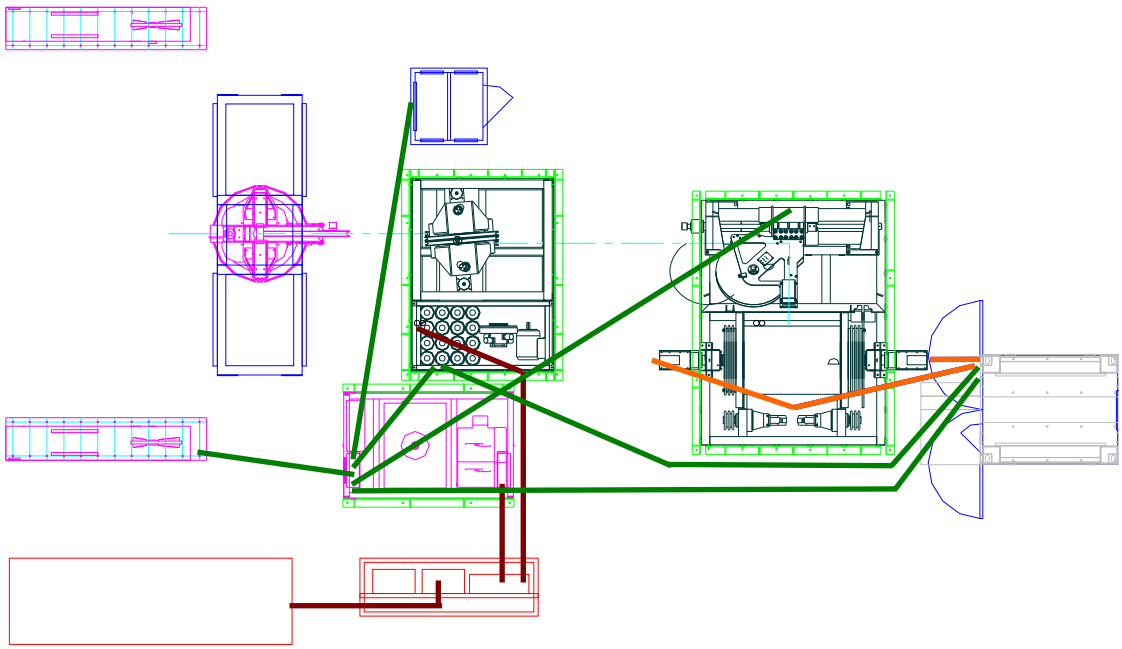

Figure 2: FTHE Electrical Cable Paths & Connection Locations

5.6.3 Electrical Power Continuity Checks

The FTHE requires 480 VAC, 60 Hz, 3-phase power and is provided from portable service generator(s) via Power Distribution System (PDS) transfer switches and circuit breakers. The HPU requires 300 Amp power and the Heave Compensator requires 250 Amp power.

The electrical cables and connectors should all be checked for damage after handling for mobilization. All connector pins should be checked for signs of corrosion after storage and cleaned as needed.

Perform the following procedures for conducting FTHE electrical system continuity checks for validating proper installation.

Ensure the Generator(s) supplying power to FTHE PDS is OFF and secured. Tag-out the Generator Main Power Switch to prevent inadvertent start-up during electrical continuity checks.

Open the PDS Transfer Switch (TS2) panel door and visually check that the Normal (A) & Emergency (B) switches are in OFF position. If not, then use the manual switch handle (yellow Hubbell tool stored on inside of panel) to turn switches OFF.

Check continuity of connection from Generator to PDS Transfer Switch (TS2). Using a Digital Multimeter with about 12' leads, check for tone on each of the three phases at bus bars of Generator and "Normal" side (top) of transfer switch. Check each bus to ensure there is conductivity to only one (e.g.: no shorts).

Check continuity of power cables from PDS Main Power Transfer Switch Panel to both the HPU and Heave Compensator. Using a Digital Multimeter, check for tone on all of the cable conductors by touching leads to corresponding connector pin on each end of cable. Also check the other two connector pins to ensure there is conductivity to only one (e.g.: no shorts).

Connect the power cables from PDS Main Power Transfer Switch Panel to both the HPU's Load Break Center Enclosure (ENC6) and the Heave Compensator's High Voltage Enclosure (ENC8).

Check to ensure the power switches are in OFF position at the HPU Load Break Center Enclosure (ENC6) & Heave Compensator High Voltage Enclosure (ENC8).

Open the PDS Main Power Transfer Switch Panel and ensure that the circuit breakers for the HPU (300 Amp), HC (250 Amp) and Spare (30 Amp) are all in the OFF position.

Close the PDS Transfer Switch (TS2) enclosure door and secure. Ensure that the exterior Transfer Switch toggle is in the NORMAL POWER position.

Perform portable Generator start-up procedure (may differ depending on rental unit), follow the instructions from the manufacturer's operation manual.

Once the Generator has been started and warmed-up, check the panel meters to ensure correct voltage of 480VAC and frequency of 60Hz, adjust as needed.

Check that the PDS Transfer Switch (TS2) panel's NORMAL POWER green indicator lamp is on. Also check the Shark 100 panel meter to ensure correct readings for voltage of 480VAC and frequency of 60Hz.

Open the PDS Main Power Transfer Switch Panel and turn the HPU (300 Amp) circuit breaker ON. Then close and secure the enclosure door.

At the HPU's Load Break Center Enclosure (ENC6) turn the power switch to ON.

Have assistant push HPU #1 START button on the HPU High Voltage Enclosure (ENC3) while you stand at forward end of HPU to watch for rotation of HPU #1 motor with hand on the Load Break Center Enclosure (ENC6) power switch. If the motor's fan turns counterclockwise, then immediately turn power switch OFF. Correct by re-terminating the generator cable conductors in the PDS Transfer Switch (TS2) by switching two leads. If HPU motor turns clockwise, then the power cables were terminated properly.

5.6.4 Electronics Cabinet Subassemblies

The Control Van electronic subassemblies should be installed into the cabinet and electrically connected to the UPS, and in turn, the UPS to receptacle power. The UPS should not be connected to the Control Van receptacle until after the Control Van has received its 208 VAC power. The electrical power and signal cable connections must be completed prior to the start-up and operation of the FTHE System and are provided in Table 9.

Table 9: Electronics Cabinet Subassembly Cable Connections

FROM		CARRYING	TO
Control Van Panel [ENC5]	Terminal Board TB1 and TB4	Signal	Signal Interface Enclosure [ENC10 (P10)], via Control Van Enclosure [ENC18]: UW Slip Rings, HC Low Voltage Enclosure [ENC9], & A-Frame Load Pin J-Box [ECL13]
Control Panel	120 VAC	Power	UPS Receptacle
Monitor	120 VAC	Power	UPS Receptacle
Computer	Processor Card	Signal	Monitor
Computer	NI7041/6040E	Signal	Signal Interface Enclosure [ENC10 (STB1)]
Computer	NI6527	Signal	Signal Interface Enclosure [ENC10 (STB2)]
Computer	NI6527	Signal	Signal Interface Enclosure [ENC10 (STB3)]
Computer	NI6034E	Signal	Test Shape Electronics Interface Enclosure [ENC17 (Multifunction DAQ Breakout)]
Computer	Processor Card	Signal	Keyboard
Computer	Processor Card	Signal	Trackball
Computer	120 VAC	Power	UPS Receptacle
Signal Interface Enclosure [ENC10]	J10, J1 & J2	Signal	Control Van Panel [ENC5] & via Control Van Enclosure [ENC18]: HC Low Voltage Enclosure [ENC9], and A-Frame Load Pin J-Box [ECL13]
Signal Interface Enclosure	120 VAC	Power	UPS Receptacle
Test Shape Signal Interface	U1, U2 & U3	Signal	Umbilical Winch (UW) Slip Ring via Control Van J-Box [ENC19]
Test Shape Signal Interface	120 VAC	Power	UPS Receptacle
UPS	120 VAC	Power	Control Van Power Receptacle

5.7 PNEUMATIC INTERCONNECTION HOOK-UPS

5.7.1 Pneumatic Considerations

Working in and around high-pressure machinery and the associated hoses and connections requires specific safety warnings to be addressed. The HC System stores nitrogen as a low-pressure gas and through the use of a compressor/intensifier, raises it to a high, operational pressure. As part of this system, the Servo Accumulator (ACC-3) must be precharged to a specific pressure (Table 11) depending on the various vehicle/package weights required for FTHE operations. Eventually, nitrogen pressure will decrease to a point where it must be replaced. Nitrogen gas is added to the system using external supply bottles.

Various personnel and equipment safety considerations when operating with high pressure gas are provided in **WARNING** and **CAUTION** statements that follow:

WARNING

Always shut down and decompress the complete system prior to performing any maintenance on the compressor.

WARNING

Always disconnect the system from the main supply prior to performing any maintenance on the compressor system with electric motor drive.

WARNING

Never repair pressure lines by soldering or welding.

WARNING

Never open any hydraulic outlet valves (allowing hydraulic oil to vent to the atmosphere) when the system is under pressure but not completely connected. The highly pressurized emerging gas can cause serious accidents.

CAUTION

Low nitrogen pressure can have an adverse effect on FTHE system operations. At the commencement of each mobilization, check for nitrogen leaks at all fittings and couplings using soapy water or spraying with leak test spray. Repair any leaks found by tightening joints or replacing faulty components.

CAUTION

All connecting hoses must be in satisfactory condition with threads undamaged. Carefully inspect the interface of hose-to-hose fittings for rubber scoring and replace if damaged. When the rubber is scored, water can enter and attack the wire gauze causing rust, thereby compromising personnel and system safety.

CAUTION

Do not allow the nitrogen gas bottles to drop below 500 psig to prevent the entrance of moisture and ambient air into the bottles.

5.7.2 HC Assembly Gas Reclamation System

The HC Assembly Gas Reclamation System uses nine 2,250 psig low-pressure nitrogen storage bottles (GB-8 to GB-16) to provide a sufficient quantity of nitrogen to allow the HC Assembly to operate properly. In turn, the intensifier (compressor) uses five 3,500 psig high-pressure nitrogen receiver bottles (GB-3 to GB-7) for accepting the high-pressure nitrogen it creates. The 14 nitrogen gas bottles used for operations are located in the HC Gas Bottle Rack on the upper level of HC Assembly and their locations are identified in Figure 3 (plan view, with starboard side of ship at top and aft on right).

Two gas bottles (GB-1 & GB-2) are labeled in rack, however, these two bottles are actually located in lower level next Servo Accumulator (ACC-3) for which they are connected. These two slots in Gas Bottle Rack are now filled with spare storage gas bottles (GB-17 & GB-18).

Note: The intensifier (compressor) requires a minimum of 500 psig at HDR-20 to operate.

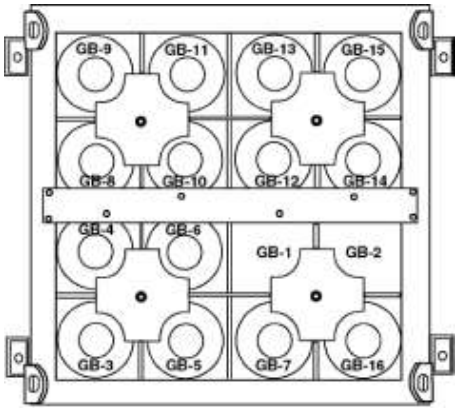

Figure 3: HC Assembly Gas Bottle Rack

5.7.3 Pneumatic Connections

The nine storage bottles are connected to low-pressure header (HDR-20) and the five receiver bottles are connected to high-pressure header (HDR-21) in the HC Gas Bottle Rack. Once the HC Gas Bottle Rack is secured within its position in the HC Assembly, four nitrogen lines must be connected to the HC Assembly. All HC Gas Reclamation nitrogen hose connections are listed in Table 10.

Table 10: HC Gas Reclamation Nitrogen Hose Connections

LOW PRESSURE	
HDR-20	**CONNECTION**
Hose 119	GB-8
Hose 120	GB-9
Hose 121	GB-10

HIGH PRESSURE	
HDR-21	**CONNECTION**
Hose 128	GB-3
Hose 129	GB-4
Hose 130	GB-5

LOW PRESSURE	
HDR-20	**CONNECTION**
Hose 122	GB-11
Hose 123	GB-12
Hose 124	GB-13
Hose 125	GB-14
Hose 126	GB-15
Hose 127	GB-16
BV-29	Hose 6 from PG-12
BV-TF	Hose 7 from BV-18
BV-23	Hose 8 from CV-14 & CV-15

HIGH PRESSURE	
HDR-21	**CONNECTION**
Hose 131	GB-6
Hose 132	GB-7
BV-22	Hose 110
BV-25	Hose 112
BV-26	Hose 113
BV-27	Hose X
BV-28	Hose X
N/A	N/A
N/A	N/A

5.7.4 Adding Nitrogen to Gas Reclamation System from an External Source

Eventually the nitrogen will decrease in pressure through leaks or natural attrition and must be replaced. To add nitrogen to the HC Assembly Gas Reclamation System from an external source, perform the following procedures:

a. Perform start-up procedures for the Heave Compensator system.

b. At the Local Control Panel (Pedestal - ENC2), flip the HEAVE COMP toggle switch to the "UNLOCK" position.

c. At the HC High Voltage Enclosure (ENC8), turn the power switch to ON.

d. Ensure HC Flying Head Assembly is bottomed-out by pressing COMPENSATOR toggle switch to LOWER on the HC High Voltage Enclosure (ENC8) until main cylinders CYL-15 & CYL-16 are fully retracted.

e. Secure the HC from operating by flipping the HEAVE COMP toggle switch on Local Control Panel (Pedestal - ENC2) to LOCK position, close switch cover and tag-out the Pedestal Control Panel with “DO NOT OPERATE”. Visually confirm that both ball valves BV-9 & BV-11 are closed. Close ball valve BV-32.

f. At the HC High Voltage Enclosure (ENC8), press the COMPENSATOR toggle switch to LOWER and decrease the receiver bottles pressure to 500-600 psig.

g. Close all but one of the nitrogen storage bottles in the Bottle Rack.

h. Ensure low-pressure nitrogen ball valve BV-TF, mounted on the Bottle Rack low-pressure Header (HDR-20), is closed along with ball valves BV-17 and BV-18.

i. Disconnect the hose from BV-TF where it connects above BV-18.

j. Connect the external nitrogen bottle through a hydraulic jumper hose to BV-TF hose using a number 4 male, 37 degree Joint Industry Council (JIC) fitting.

k. Open BV-TF and slowly open the external nitrogen bottle valve.

l. At the HC High Voltage Enclosure (ENC8), press the COMPENSATOR toggle switch to RAISE and increase the receiver bottles pressure until the external storage bottle pressure has dropped to between 500 and 600 psig.

m. Once the system has come to equilibrium (500-600 psig), close the external nitrogen bottle valve and close ball valve BV-TF.

n. If more of a nitrogen charge is needed, connect a new fully-charged external nitrogen bottle and repeat the steps j through m.

o. When completed charging system with external nitrogen bottles, reconnect the line from ball valve BV-TF to ball valve BV-18.

p. Open all gas storage bottles, ball valve BV-32, and resume normal operations.

5.7.5 HC Boost Pressure Precharge Procedure

The HC Servo Accumulator (ACC-3) precharge pressure is referred to as "Boost Pressure" and is read from the Boost Accumulator Gas Pressure gauge on aft gauge panel above the HC High Voltage Enclosure. The HC Servo Accumulator (ACC-3) and nitrogen gas bottles (GB-1 & GB-2) need to be precharged to an initial pressure that is 10% below the HC hydraulic system pressure which is based upon the anticipated A-Frame load range, see Table 11.

Table 11: Boost Accumulator Gas Pressure Charge for A-Frame Load Range

A-FRAME LOAD RANGE	HC HYD. OIL PRESSURE	BOOST ACCUMULATOR GAS PRESSURE
5,000 to 24,000 lbs	2,200 psig	1,980 psig
24,000 to 34,000 lbs	2,500 psig	2,250 psig

CAUTION

If the umbilical is reeved on the HC sheaves and the Flying Head was not left in lowest position, the following procedure will cause the umbilical to slack. Ensure personnel in area are aware of this prior to lowering HC Flying Head.

NOTE: The HC Boost Accumulator Gas Pressure cannot be changed to accommodate different A-Frame Assembly weight loads *until* the hydraulic oil in accumulators ACC-1 and ACC-2 has been completely drained and the nitrogen pressure reduced to 0 psig.

To adjust proper HC Boost Accumulator Gas Pressure for A-Frame load range, precharge the HC Servo Accumulator (ACC-3) and gas bottles (GB-1 & GB-2) with nitrogen by performing the following steps:

a. Perform start-up procedures for the Heave Compensator system.

b. At the Local Control Panel (Pedestal - ENC2), flip the HEAVE COMP toggle switch to the "UNLOCK" position.

c. At the HC High Voltage Enclosure (ENC8), turn the power switch to ON.

d. Ensure HC HPU motor is secured by verifying the HPU RUNNING lamp is out and then tag-out the HC's HPU START button with "DO NOT OPERATE".

e. Ensure the hydraulic oil OPEN LOOP SYSTEM PRESSURE gauge reads 0 psig.

f. Ensure HC Flying Head Assembly is bottomed-out by pressing COMPENSATOR toggle switch to LOWER on the HC High Voltage Enclosure (ENC8) until main cylinders CYL-15 & CYL-16 are fully retracted.

g. Secure the HC from operating by flipping the HEAVE COMP toggle switch on Local Control Panel (Pedestal - ENC2) to LOCK position, close switch cover and tag-out the Pedestal Control Panel with "DO NOT OPERATE". Visually confirm that both ball valves BV-9 & BV-11 are closed. Close ball valve BV-32.

h. Verify that the ball valves BV-38 (on GB-1) and BV-39 (on GB-2) are open, located aft inside cage by Servo Accumulator 3 (ACC-3).

i. At the upper level bottle rack, close all but one of the receiver bottle valves.

j. Slowly open BV-14, located on forward top of the Hydraulic Panel, which will release pressure from the one high-pressure nitrogen receiver bottle (previous step) to gas bottles GB-1 and GB-2 via header HDR-16. [BV-TF?]

k. At the HC High Voltage Enclosure (ENC8), hold the COMPENSATOR toggle switch to RAISE position until the Boost Accumulator Gas Pressure gauge shows the desired pressure, determined by the A-Frame load range shown in Table 11. Release the toggle switch, which turns off the intensifier (HC compressor).

l. Close BV-14, located on top forward end of the Hydraulic Panel. [BV-TF?]

m. Close ball valves BV-38 (on gas bottle GB-1) and BV-39 (on gas bottle GB-2) if the HC system is not going into immediate use.

n. Return the receiver bottles to their normal operating pressure using the intensifier and holding the COMPENSATOR toggle switch to LOWER position.

o. At the upper level bottle rack, open all the receiver bottle valves.

p. Open ball valve BV-32, located on the HC Hydraulic Panel forward end.

q. Refill the HC Main Cylinders (CYL-13 & CYL-14) with hydraulic oil and then balance the cylinders and their accumulators (ACC-1 & ACC-2) to 50% of travel.

5.8 HYDRAULIC INTERCONNECTION HOOK-UPS

5.8.1 Hydraulic Considerations

Working in and around high-pressure machinery, the associated hoses and connections requires specific safety warnings to be addressed. The FTHE System utilizes high operational hydraulic pressures where special caution needs to be exercised. Various personnel and equipment safety considerations when operating with high pressure hydraulic systems are provided in WARNING and CAUTION statements that follow:

WARNING

Always shut down HPU power, isolate specific line(s) by shutting valves, and depressurize hydraulic system prior to performing any maintenance.

WARNING
Never repair pressure lines by soldering or welding.

WARNING
Never open any hydraulic outlet valves (allowing hydraulic oil to vent to the atmosphere) when the system is under pressure but not completely connected. Highly pressurized, emerging oil can cause serious accidents.

CAUTION
Low HPU Charge Pressure (less than 350 psi) can have an adverse effect on the HPU pumps. At the commencement of each power-up, check the Charge Pressure gauge to ensure it reads ~370 psi, otherwise press STOP button and perform trouble shooting to correct.

CAUTION
All hydraulic connecting lines must be in satisfactory condition, with no visible damage or leaks. Carefully inspect the interface of hose connections and interconnecting fittings for damage or leaks. Repair any leaks found by tightening joints or replacing faulty components.

5.8.2 Hydraulic Connections

The hydraulic hose connections for all FTHE major units must be completed prior to start-up and operation of the Umbilical Winch System and A-Frame Assembly (Figure 4). All loose hoses must be tied-down to deck or equipment frame-work with tie wraps to prevent being washed about during heavy seas.

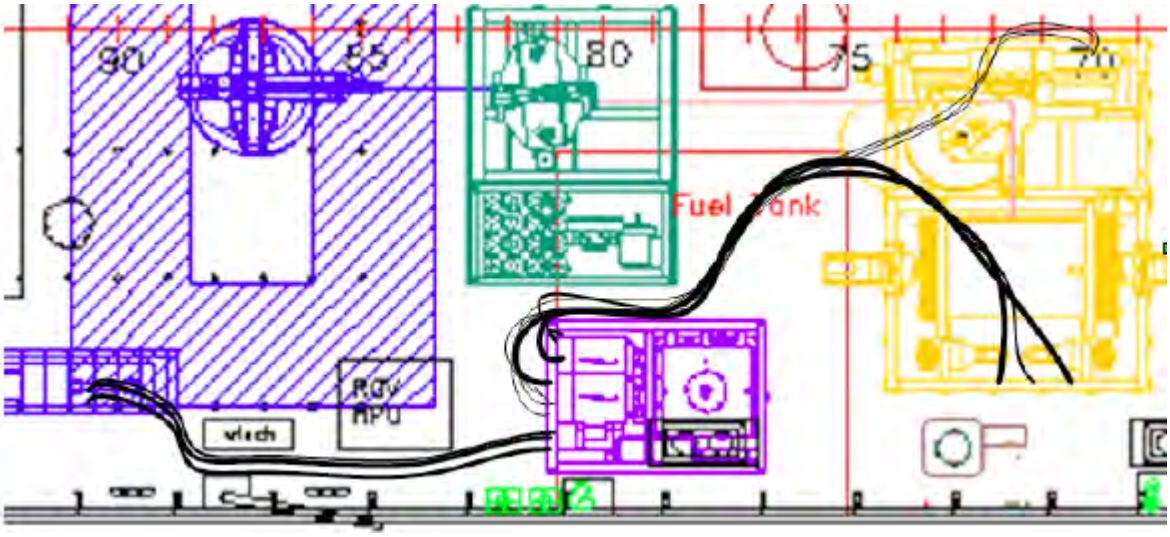

Figure 4: FTHE Hydraulic Hose Paths & Connection Locations

5.8.3 A-Frame Hydraulic Interconnection

The A-Frame hydraulic hose interconnections, from HPU to the A-Frame Assembly Manual DCV Station, are shown in Figure 4 and listed in Table 12. This mobilization effort assumes the A-Frame assembly is moved as one unit, with all interconnecting hydraulic lines between legs and Docking Head intact.

Table 12: A-Frame Hydraulic Hose Interconnection

Hose Origin	Hose Label	Hose Destination
HPU Manifold (LARS PRESS. label)	LARS Press.	FL-11 **QD** (Manual DCV Station)
DCV-1 **QD** (Manual DCV Station)	LARS Return	HPU Manifold (LARS RETURN label)
HPU Manifold (LARS ZERO PRESSURE label)	LARS Zero Press.	HDR-7 **QD** (Manual DCV Station)

5.8.4 Umbilical Winch / Levelwind Hydraulic Interconnection

The Umbilical Winch / Levelwind System hydraulic hose interconnections are shown in Figure 4 and listed in Table 13.

Table 13: Umbilical Winch / Levelwind Hydraulic Interconnection

Hose Origin	Hose Label	Hose Destination
HPU Manifold (STORAGE WINCH CASE)	UW Case	HM-2 **QD** (UW port, forward side)
HPU Manifold (STORAGE WINCH A)	UW Port A	FL-5 **QD** (UW port, aft side)
HPU Manifold (STORAGE WINCH B)	UW Port B	FL-6 **QD** (UW port, forward side)
HPU Manifold (LEVELWIND PRESS.)	LW Press.	FL-10 **QD** (LW Hyd Panel, port, forward side)
SW-1 **QD** (LW Hyd Panel, port, aft side)	LW Return	HPU Manifold (LEVELWIND PRESS.)
HPU Manifold (LEVELWIND ZERO PRESSURE)	LW Zero Press.	HDR-4 **QD** (LW Hyd Panel, port side)
BRAKE **QD** (LW Hyd Panel, port side)	UW Brake	UW Brake Line (aft, below brake)

5.8.5 Hydraulic System Oil Replacement

5.8.5.1 Upper Case Drains

If the FTHE is shipped with all oil reservoirs and cases drained, then the following steps must be accomplished prior to startup.

Table 14: FTHE Upper Case Drain Locations

Equipment	Designation	Flowline	Number of Drains
Umbilical Winch Pumps	HP-IA	25	1
	HP-2A	29	1
Levelwind / Auxiliary Pumps	HP-IB	40	1
	HP-2B	41	1
UW Hydraulic Motors	HM-1	16	1
	HM-2	17	1

NOTE: All hydraulic fluid should be passed through a 5-micron filter prior to commencing each FTHE System mobilization.

a. Remove upper case drain fittings as listed in Table 11.
b. Remove dirt, grease, or other contaminants from the surface areas surrounding the upper case drain openings and from the upper case drain fittings.
c. Fill pump and motor cases through the upper case drain openings with hydraulic fluid provided with the FTHE System.
d. Reinstall and tighten case drain lines and tighten all fittings where required.
e. Loosen suction lines at the respective pump inlet.
f. Using a 5-micron filter cart, fill the power unit reservoir until fluid reaches the loosened hoses at the respective pump inlet(s). Tighten the hoses and continue filling the reservoir, ensuring that the reservoir fluid level has reached the "HIGH" mark on the applicable sight level gauge.
g. Recheck pump and motor case fluid levels.

5.8.5.2 HC Hydraulic Oil Replenishment Procedure

Replenishment of the hydraulic oil in closed loop system of the HC Flying Head cylinders (CYL-13 & CYL-14) and accumulators (ACC-1 & ACC-2) is required during mobilization. Periodic flush and fill of this oil is recommended after every 2 weeks of continuous operations in order to prevent degradation of oil that may reduce operational effectiveness.

For this operation the receiver bottles will need pressure reduced to only 100-200 psi, which if at operational charge will result in appreciable nitrogen being vented. Therefore, it may be necessary to replace the nitrogen lost from the flush, such that replacement storage bottles should be available to complete procedure.

CAUTION

The HC Flying Head will be moved during these procedures. Ensure personnel in are clear of HC *prior* to moving Flying Head. Also check that Flying Head path is clear and no loose tools or foreign materials are on HC.

NOTE: The HC Boost Accumulator Gas Pressure cannot be changed to accommodate different A-Frame Assembly weight loads *until* the hydraulic oil in accumulators ACC-1 and ACC-2 has been completely drained and the nitrogen pressure reduced to 0 psig.

The following procedures assume the umbilical is NOT installed on HC and can be performed without utilizing the Control Van computer.

1. Ensure BV-9 and BV-11 are closed. This is required to ensure the flying head does not inadvertently move.
2. Open the valves on the Receiver Bottles.
3. Open the valves on the Storage Bottles.
4. Ensure BV25-28 are open.
5. Ensure BV-12,13,15,16 are open.
6. Ensure BV-22 and BV-23 are open.
7. Turn on the power switch to the Heave Compensator
8. Set the pressure in the receiver bottles to 100-200 psi.
    a. To increase pressure, open BV-24 to transfer gas from storage bottles.

   b. To lower pressure, hold the intensifier operation switch to the LOWER position until 500 psi is achieved in receiver bottles, then loosen a hose fitting to one receiver bottle venting nitrogen until 100-200 psi is achieved.

9. Remove the pin securing the actuators to BV-9 and 11 so the valves can be actuated manually.
10. Open BV-10, located on the HC Hydraulic Panel top aft end.
11. Move BV-31 to the drain position.
12. Open BV-30 to allow the oil from the cylinders to vent to the reservoir. This will lower the flying head if it is not landed.
13. Manually, open BV-9 slowly. The oil inside accumulator ACC-1 will vent to the reservoir. There is the possibility that it may raise the docking head, but it will lower again.
14. Manually, slowly open BV-11. The oil inside accumulator ACC-2 will vent to the reservoir. There is the possibility that it may raise the docking head but it will lower again.
15. Start the Heave Compensator HPU.
16. Switch BV-31 from drain to fill. This will fill the accumulators and then the flying head will rise.
17. Before the head reaches full stroke (approximately 42 inches), move BV-31 back to drain. This will drain the cylinders, lowering the flying head and then drain the accumulators.
18. Allow 2 minutes after the flying head lands for the accumulators to empty.
19. Manually close BV-9 and 11.
20. Move BV-31 to fill. Just before the flying head reaches full stroke, move BV-31 back to drain.
21. Repeat step 20 several times to dilute the dirty oil with clean oil
22. Fill the cylinders near full again and close BV-30.
23. Manually open BV-9. The flying head will lower, pumping the cylinder oil into ACC-1. If the flying head does not lower, the pressure in the accumulator is too high and must be reduced. See step 8b.
24. When the flying head has landed, close BV-9.
25. Open BV-30 to raise the flying head filling the cylinders again. Close BV-30 when near full.
26. Manually open BV-11. The flying head will lower, pumping the cylinder oil into ACC-2.
27. When the flying head has landed, close BV-11.
28. Move BV-31 handle horizontal to its neutral position.
29. The oil level in the cylinder/accumulator circuit has now been flushed and filled. If the computer is available, ACC-1 and 2 accumulator pistons should both be at approximately 20% if done correctly. If not, repeat from step 11.
30. Increase the pressure in the receiver bottles to 500 psi by opening BV-24 until the pressure is achieved.
31. Close BV-10, located on the HC Hydraulic Panel top aft end.
32. Reinstall the pins securing the actuating cylinders to BV-9 and BV-11.
33. Verify using the checklists that all valves are in the correct position for operation or shutdown, depending the next evolution.

5.9 COOLING WATER INTERCONNECTION HOOK-UPS

Cooling water should run continuously when the FTHE LARS systems are operating and secured when the FTHE is secured. The cooling water hose connections for both the HPU and the HC must be completed prior to start-up and operation of the applicable FTHE LARS system. The cooling water hose connections are listed in Table 15.

Table 15: Cooling Water Hose Connections

Unit	Supply	In	Connection	Out	Destination
HPU	Ship	PSH-4	HX-1	Discharge	Overboard
HC	Ship	SOV-6	HX-2	Discharge	Overboard

5.10 FTHE START-UP & SHUT-DOWN PROCEDURES

Every time the FTHE system is to be operated, there are procedures and critical inspections that shall be conducted to confirm system readiness, to prevent equipment damage, and to ensure safe operations.

5.10.1 FTHE Prestart Inspections

Prior to powering up FTHE systems, the following Prestart Inspection Sheets shall be checked-off and signed by qualified inspector.

Table 16: FTHE Prestart Inspection Sheets (Unpowered)

FTHE PRESTART INSPECTION SHEET 1				
DATE / TIME		INSPECTOR		SIGNATURE
√	ITEM	ACTION	LOCATION	NOTES
FTHE CONTROL PEDESTAL				
	Emergency Stop	Pull button up	Panel top right	Allows system to operate
	HC Switch	Remove covering and verify HC switch in the LOCKED position.	Lower right panel quadrant	Locks the Heave Compensator from operating
A-FRAME				
	Ball Valves (BV) BV-6 and BV-7	Verify ball valves OPEN	A-Frame, Main Cylinders	Ball valves used to isolate hydraulic oil between A-Frame cylinders and hydraulic headers.
	BV-8	Verify ball valve OPEN (handle vertical)	Under the DCV Station	
	A-Frame System Deck Area and DCV Station	Check for loose hoses, oil leaks or unusual conditions. Ensure no objects are on stops.	A-Frame, lower	The DCV Station is the local control for all operations of the A-Frame and Cursor.
	A-Frame DCV Station Controls	Move control levers to ensure range of motion	DCV Station, Top controls	Hydraulic control levers should be checked for proper lubrication
	A-Frame J-Box (JB-3) control cable connector	Verify cable/connector tightness	Manual DCV Station, forward end	Connector must be screwed in all the way to ensure proper contact of conductors.
	Load Pin connector	Verify cable connector tightness	DCV Station ECL13	
	Swing Frame and Cursor	Check for loose hoses, oil leaks or unusual conditions.	A-Frame Docking Head Platform	A-Frame Docking Head Platform *inspection required at least once per week.*
	Load Pin connector	Verify cable connector tightness	Swing Frame ECL11	*Inspection required at least once per week.*
	Cursor Winch Payout Limit Switch XS11	Verify switch-arm free for movement and inspect rope quality	Swing Frame Cursor	*Inspection required at least once per week.*
	A-Frame Accelerometer electrical connector	Verify cable connector tightness.	Swing Frame, aft, center	*Inspection required at least once per week.*

FTHE PRESTART INSPECTION SHEET 2				
DATE / TIME		INSPECTOR		SIGNATURE
√	ITEM	ACTION	LOCATION	NOTES
HYDRAULIC POWER UNIT (HPU)				
	Cooling water	Inspect and clean strainer	Behind HPU manifold, aft	
	Cooling water	Verify discharge	Sewer	
	LG-1	Verify oil visible in gauge	HPU Tank	Level Gauge preferably ½ full.
	BV-1, BV-2, BV-3 & BV-4	Verify ball valves CLOSED	HPU port side	HP-1A and HP-2A Umbilical Winch pump discharge ball valves
	HPU Low Voltage Enclosure (ENC1) connectors	Verify all cable/connector tightness	Under ENC1, aft, starboard side	
	Power Switch	Verify the power switch is in the OFF position	Load Break Center (ENC6)	
	General hydraulic inspection	Check for loose hoses/leaks	Entire subsystem	
WINCH AND LEVELWIND				
	Slip Ring connectors J2, J4, J5 & J6	Verify cable/connector tightness	Forward and aft of UW drum axle	
	UW Drum Count electrical connector	Verify cable/connector tightness	JB-4 on UW aft skid, port of brake pads	
	UW Brake hyd hose	Verify hose connector tight	UW aft skid	
	GMB-3	Verify hydraulic oil visible	LW forward	Levelwind Gearbox sight glass
	GMB-1 & GMB-2	Verify hydraulic oil visible	UW starboard	Winch Gearbox sight glasses
	Umbilical	Verify tight wraps and umbilical path free to travel	UW Drum & LW Sheave	
	Levelwind Pivot Pins	Verify free to travel	LW Sheave Sensor	Top of LW Sheave, hold umbilical to move (guide) pins back and forth
	Levelwind Enclosure (ENC4) Cable 5 connector	Verify cable/connector tightness	Under ENC4	
	Levelwind Carriage Assembly, Guide Bars, and Drive ACME Screw	Verify Guide Bars and ACME Drive Screw sufficiently greased; Carriage Assembly free to travel	Port side	
	General hydraulic inspection	Check for loose hoses/leaks	Entire subsystem	

FTHE PRESTART INSPECTION SHEET 3				
DATE / TIME		INSPECTOR		SIGNATURE
√	ITEM	ACTION	LOCATION	NOTES
HEAVE COMPENSATOR (HC)				
LOWER LEVEL				
	Power Switch	Verify the power switch is in the OFF position	High Voltage Panel (ENC8)	
	Cooling water	Inspect and clean strainer	Cooling water loop on HC	
	Cooling Water	Verify discharge	Overboard	
	Flying/Lower Head and Sheaves	Verify freedom to travel	Upper/Lower Levels	
	BV-9 & BV-11	Verify valves are CLOSED	Base of ACC-1 and ACC-2	Ball valves used to isolate hydraulic oil between Main Cylinders and HDR-12 and HDR-13.
	BV-32	Verify valve CLOSED (handle horizontal)	HC Hyd Panel, fwd by ladder	Main Cylinders back-up lock valve, isolates pressure to BV-9 & BV-11
	LG-2	Verify oil visible in gauge	HC Tank	Level Gauge preferably ½ full.
	BV-12, BV-13, BV-15, BV-16	Verify valves OPEN (handle horizontal)	HC Hyd Panel, fwd by ladder	HDR-11: Ball valves used to isolate high press N2 between receiver gas bottles and ACC-1 and ACC-2.
	BV-10	Verify valve CLOSED (large blue handle, vertical)	HC Hyd Panel, forward, center	Ball valve used to cross connect ACC-1 and ACC-2 between HDR-12 and HDR-13.
	BV-14	Verify valve CLOSED (handle horizontal)	HC Hyd Panel, fwd by ladder	HDR-16: Ball valve used for initial N2 charge of GB-1 and GB-2 for ACC-3.
	BV-17	Verify valve CLOSED	HC Hyd Panel, fwd by ladder, behind BV-14	Located below HDR 16
	BV-18	Verify valve CLOSED	HC Hyd Panel, fwd by ladder	HDR-16: Ball valve used with BV-TF to charge hydraulic tank with N2 to 5 psi.
	BV-19	Verify valve OPEN (handle vertical)	HC Hyd Panel, fwd by ladder	
	BV-38 & BV-39	Open both valves, turning handles in vertical position	HC aft, center	Top of GB-17 & GB-18
	Intensifier oil level	Verify oil level midrange in sight glass (orange color)	Intensifier, aft	Oil reservoir for Intensifier.
	General hydraulic inspection	Check for loose hoses/leaks	Entire subsystem	
	General pneumatic inspection	Check all connection fittings and valves for leaks (listen for hiss)	Entire HC lower subsystem	Use soapy water to spray on connection points to visually see leaks form bubbles.

FTHE PRESTART INSPECTION SHEET 4				
DATE / TIME		INSPECTOR		SIGNATURE
√	ITEM	ACTION	LOCATION	NOTES
HEAVE COMPENSATOR (HC)				
UPPER LEVEL				
	BV-24	Verify CLOSED	N2 Bottle Rack, top center	Ball valve used to cross connect low pressure header HDR-20 with high pressure header HDR-21.
	GB-8, GB-9, GB-10, GB-11, GB-12, GB-13, GB-14, GB-15 & GB-16	OPEN valves on nine N2 Storage Bottles	N2 Bottle Rack, located on top of each bottle	Ball valves used to isolate N2 Storage Bottles. Open valves fully and then rotate handle back ¼ turn.
	BV-33, BV-34, BV-35, BV-36 & BV-37	OPEN valves on all 5 blue N2 Receiver Bottles	N2 Bottle Rack, located on top of each bottle	Ball valves used to isolate N2 Receiver Bottles. Open valves fully, handles in vertical position.
	BV-25, BV-26, BV-27 & BV-28	OPEN all four valves	N2 Bottle Rack, top center	HDR-21: Ball valves used to isolate high press N2 between receiver gas bottles and ACC-1 and ACC-2.
	BV-22	OPEN valve	N2 Bottle Rack, top center	HDR-21: Ball valve used to isolate high pressure N2 between receiver gas bottles and intensifier.
	BV 23	OPEN valve	N2 Bottle Rack, top center	HDR-20: Ball valve used to isolate low pressure N2 between storage gas bottles and the Intensifier.
	BV-29	OPEN valve	N2 Bottle Rack, top center	HDR-20: Ball valve used to isolate low pressure N2 from storage gas bottles to PG-12.
	BV-TF	Verify valve CLOSED	N2 Bottle Rack, top center	HDR-20: Ball valve used with BV-18 to charge hydraulic tank to 5 psi.
	BV-21	Verify OPEN	Gas Intensifier Panel, by red alarm horn	Ball valve used (in series with BV-22) to isolate high pressure N2 between receiver gas bottles and Intensifier.
	Intensifier oil level	Verify oil level midrange in sight glass (orange color)	Intensifier, aft (upper lever)	Oil reservoir for Intensifier. Best viewed from deck level, aft of HC.
	General pneumatic inspection	Check all connection fittings and valves for leaks (listen for hiss)	Entire HC upper subsystem	Use soapy water to spray on connection points to visually see leaks form bubbles.

5.10.2 FTHE System Start-Up Procedures

The FTHE System Start-Up Procedures should be performed whenever the FTHE system is started in preparation for operation. Ensure that all personnel in the operation area are aware that system is about to be powered up and will move to appropriate safe zones if not wearing PPE (hard hats, steel toe boots, etc).

CAUTION

Prior to operation of the Umbilical Winch System, all installation procedures, hydraulic connections, and electrical connections must be completed for the entire system.

CAUTION

After FTHE initial startup, verify that minimum acceptable hydraulic system pressure levels are reached.

NOTE: The Umbilical Winch and A-Frame operational functions may be stopped at any time by depressing the HPU STOP push button located on the Local Control Panel (Pedestal) or the Control Van Panel or the HPU High Voltage Enclosure, as well as the EMERGENCY STOP button.

Table 17: FTHE System Power-Up Procedures

DATE / TIME		INSPECTOR	SIGNATURE
√	ITEM	ACTION	
UTILITIES			
	Cooling Water	Ensure that cooling water strainers are clean on both the HPU and HC. Ensure that cooling water is hooked up to both the HPU & HC, turn on water and then check the two cooling water hoses for proper discharge.	
	Electrical Power	Ensure Generator is OFF and all electrical cables are properly connected	
POWER DISTRIBUTION SYSTEM			
	Circuit Breakers	Open the PDS Main Power Transfer Switch Panel and ensure that the circuit breakers for the HPU, HC, and Spare are all in the OFF position.	
	TS-2 Switch	Ensure the Transfer Switch toggle is in the NORMAL POWER position.	
	Genset Start-Up	Perform portable Generator start-up procedure by following the instructions from the manufacturer's operation manual.	
	Genset Warm-Up	Once the Generator has been started, check the panel meters to ensure correct voltage of 480VAC and frequency of 60Hz, adjust as needed.	
	TS-2 Indicators	Check that the PDS Transfer Switch (TS2) panel's NORMAL POWER green indicator lamp is on. Also check the Shark 100 panel meter to ensure correct readings for voltage of 480VAC and frequency of 60Hz.	
	Circuit Breakers	Open the PDS Main Power Transfer Switch Panel and turn ON both the HPU (300 Amp) circuit breaker and the HC (250 Amp) circuit breaker.	
HYDRAULIC POWER UNIT			
	HPU Power Switch	Move AC POWER circuit breaker at Load Break Center (ENC6) to ON.	
	Power Lamp	Verify power "OK" lamp at High Voltage Enclosure is illuminated.	
	Alarm Lamps	Verify Low Oil Level & High Oil Temperature alarm lamps are not lighted.	

DATE / TIME		INSPECTOR	SIGNATURE
√	ITEM	ACTION	
	Heating Lamp	Hydraulic oil "Heating" lamp may be illuminated if oil temperature is low.	
	#1 START	Depress HPU #1 START button (High Voltage Panel)	
	#1 Running Lamp	Verify HPU #1 "Running" lamp is illuminated.	
	#1 Charge Gauge	Verify #1 Charge Pressure is about 390 psi, *otherwise* hit STOP & check.	
	#2 START	Depress HPU #2 START button (High Voltage Panel)	
	#2 Running Lamp	Verify HPU #2 "Running" lamp is illuminated.	
	#2 Charge Gauge	Verify #2 Charge Pressure is about 390 psi, *otherwise* hit STOP & check.	
	#1 Open Loop Gage	Verify #1 Open Loop Pressure is approximately 3,000 psi.	
	#2 Open Loop Gage	Verify #2 Open Loop Pressure is approximately 3,000 psi.	
	LW Pressure Gage	Verify Levelwind Pressure is approximately 3,000 psi.	
	BV-1 & BV-2	Open BV-1 and BV-2 for HPU #1.	
	BV-3 & BV-4	Open BV-3 and BV-4 for HPU #2.	
	HPU System	Visually observe HPU for hydraulic oil leaks.	
	UW, LW & AF	Visually observe Winch, Levelwind, and A-Frame for hydraulic oil leaks.	
HEAVE COMPENSATOR			
	HC Power Switch	Move HC Power Breaker to ON (High Voltage Panel)	
	Power Lamp	Verify AC Power "OK" lamp is illuminated.	
	Alarm Lamps	Verify Low Oil Level & High Oil Temperature alarm lamps are not lighted.	
	Boost Accum. Gas Press. Gage	Verify Boost Accumulator Gas Pressure is between 1,850 to 2,500 psi. If not in range, then correct *prior* to starting system.	
	HC START	Depress the HC START button (High Voltage Panel)	
	Running Lamp	Verify HC "Running" lamp is illuminated.	
	Open Loop Gage	Verify Open Loop System Pressure at approximately 2,000 psi.	
	Main Cyl Rod Gage	Verify Main Cylinders Rod End Pressure at approximately 1,000 psi.	
	Cooling Gage	Verify Cooling Pump Pressure at approximately 20 psi (minimum).	
	Tank Press. Gage	Verify Tank Pressure is approximately 5 psi (maximum).	
	Storage Gas Gage	Verify Storage Bottles Gas Pressure is between 1,000 to 2,300 psi.	
	HC System	Visually observe HC for hydraulic oil leaks and listen for N2 leaks.	
CONTROL VAN ELECTRONICS RACK			
	UPS Power	Depress and hold the UPS ON/OFF/STAND-BY button until the power LED is illuminated and an audible "beep" occurs (approximately 1 sec).	
	Test Shape Pwr	Turn the Test Shape Enclosure power switch to ON	
	Computer Power	Open the computer panel door, press the POWER button to "I" (ON), observe the POWER LED is lighted and the monitor illuminates.	
	Software Start	Visually observe that the computer automatically launches the *host.exe* application that provides the GUI display.	

5.10.3 FTHE System Post Power-Up Inspections

The FTHE System Post Power-Up Inspection should be performed whenever the FTHE system is started in preparation for operation.

Table 18: FTHE System Post Power-Up Inspection Sheet

FTHE POST POWER-UP INSPECTION SHEET				
DATE / TIME		INSPECTOR		SIGNATURE
√	ITEM	ACTION	LOCATION	NOTES
FILTER LIFE				
	FL-1, FL-2, FL-3, FL-4	Verify indicator is in green area	HPU above BV-1 through BV-4	Replace filter when indicator is in red area.
	FL-8 & FL-9	Verify indicator is in green area	HPU Hydraulic Panel	Replace filter when indicator is in red area.
	FL-5 & FL-6	Verify indicator is in green area	Winch at GB-1, GB-2	Replace filter when indicator is in red area.
	FL-10	Verify indicator is in green area	Levelwind Hydraulic Panel	Replace filter when indicator is in red area.
	FL-11	Verify indicator is in green area	A-Frame below the Manual DCV Station	Replace filter when indicator is in red area.
	FL-13	Verify indicator is in green area	HC Hydraulic Panel, forward bottom	Replace filter when indicator is in red area.
	FL-14	Verify indicator is in green area	HC lower level	Replace filter when indicator is in red area.
Pressure Gauges				
Hydraulic Power Unit				
√	ITEM	NOMINAL VALUE (PSIG)	HPU #1 - PRESSURE (PSIG) - HPU #2	
	A Port Pressure	0 - 3000		
	B Port Pressure	0 - 3000		
	Charge pressure	390		
	Open loop Pressure	3000		
	Levelwind Pressure	3000		
	Return Pressure	25 (Maximum)		
HEAVE COMPENSATOR				
√	ITEM	NOMINAL VALUE (PSIG)	PRESSURE (PSIG)	NOTES
	Boost Accumulator Gas Pressure	1850 to 2500		If not in range, then STOP HC and correct *prior* to starting system again.
	Open System Loop Pressure	2000		
	Main Cylinders Rod End Pressure	1000		
	Cooling Pump Pressure	20		
	Accumulator Gas Pressure	500 (Minimum)		Receiver Header Pressure
	Tank Air Pressure	5 (Maximum)		
	Storage Bottles Gas Pressure	1000 to 2300		Supply Header Pressure

5.10.4 FTHE System Shut-Down Procedures

The FTHE System Shut-Down Procedures should be followed whenever the FTHE system is secured from operation.

Table 19: FTHE System Shut-Down Procedures

DATE / TIME		INSPECTOR	SIGNATURE
√	ITEM	ACTION	
HEAVE COMPENSATOR			
	HC System	Verify that all FTHE activities are complete and Flying Head is bottomed.	
	HC LOCK Switch	On Control Pedestal, flip "Heave Comp" toggle switch to LOCK position	
	BV-32	Close valve BV-32 (HC Hydraulic Panel – Lower Level)	
	HC STOP	Depress the HC STOP button (High Voltage Panel)	
	N2 Bottle Valves	Close valves on all N2 cylinders in the Gas Bottle Rack (HC upper level)	
	High Pres. Valves	Close valves BV-22, BV-25, BV-26, BV-27 & BV-28 (High Pressure)	
	BV-23	Close valve BV-23 (Bottle Rack Low Pressure - Storage)	
	N2 Bottle Valves	Close valves on two N2 cylinders for ACC-3 (lower level, aft)	
	HC Power Switch	Move HC Power Breaker to OFF (High Voltage Panel)	
	HC System	Visually observe HC for hydraulic oil leaks and listen for N2 leaks.	
HYDRAULIC POWER UNIT			
	FTHE System	Verify that all FTHE operations are complete.	
	#1 STOP	Depress HPU #1 STOP button	
	#2 STOP	Depress HPU #2 STOP button	
	BV-1 & BV-2	Close BV-1 and BV-2 for HPU #1.	
	BV-3 & BV-4	Close BV-3 and BV-4 for HPU #2.	
	HPU Power Switch	Move AC POWER circuit breaker at Load Break Center to OFF.	
	HPU System	Visually observe HPU for hydraulic oil leaks.	
	UW, LW & AF	Visually observe Winch, Levelwind, and A-Frame for hydraulic oil leaks.	
CONTROL VAN ELECTRONICS CABINET			
	Computer OFF	Depress "CTRL-ALT-DEL" keys simultaneously on the Remote Control keyboard and select "Shutdown" with the cursor.	
	Test Shape OFF	Depress the Test Shape Enclosure power switch to OFF	
	UPS OFF Button	Depress and hold the UPS ON/OFF/STAND-BY button until the power LED extinguishes and an audible "beep" occurs.	
UTILITIES			
	Electrical Power	Shut off breakers in PDS Main Breaker Panel and Genset Power Switch	
	Cooling Water	Turn off the cooling water to both the HPU and HC.	

6.0 END-TO-END FUNCTIONAL TESTS

6.1 CONTROLS AND INDICATORS FUNCTIONAL VERIFICATION

The following test procedures are utilized to verify proper function of the FTHE System controls and indicators on each individual control enclosure/panel.

6.1.1 Hydraulic Power Unit High Voltage Enclosure (ENC3)

The following procedures may commence after Power-Up and Inspection Sheet has been performed, where the systems have been activated and are operating properly.

Initial for proper function

6.1.1.1 *Power Fault Lamp* - verify that the lamp flashes on initial start-up.

6.1.1.2 *Power OK Lamp* - verify lamp is lit when power status is complete and power is OK.

6.1.1.3 *Oil Overheat Lamp* - verify lamp is lit when oil temperature reaches 140ºF. This may be done by running both HPU motors with cooling water turned off, while ball valves BV-1, -2, -3, -4 are closed (closed-loop). Use LG-1 temperature gauge and temperature strips on reservoir to calibrate. Adjust temperature switch TSH-2 (starboard side of reservoir) as needed. NOTE: May be checked at same time with 6.1.3.3 *High Oil Temp Lamp* at Local Control ENC2.

6.1.1.4 *Hydraulic Oil Heating Lamp* - verify lamp is lit when oil immersion heaters are enabled. Test this by removing control knob covers on temp. switches TSH-1 & TS-3 and turning knob to temperature higher than ambient in order to active switches to turn on heaters and lamp. Test each switch (TSH-1 & TS-3) separately and then together. Also verify lamp goes out when either HPU #1 or #2 is started, indicating that the oil immersion heaters are disabled (do for both). Reset TSH-1 & TS-3 to 60ºF when finished and replace covers.

6.1.1.5 *HPU #1 Start* - verify HPU #1 starts when pushbutton is depressed.

6.1.1.6 *HPU #1 Running Lamp* - verify lamp is lit when HPU #1 is running.

6.1.1.7 *HPU #1 Stop* - verify HPU #1 stops when push button is depressed.

6.1.1.8 *HPU #2 Start* - verify HPU #2 starts when pushbutton is depressed.

6.1.1.9 *HPU #2 Running Lamp* - verify lamp is lit when HPU #2 is running.

6.1.1.10 *HPU #2 Stop* - verify HPU #2 stops when push button is depressed.

6.1.1.11 *Emergency Stop* - verify that the HPU motors stop when button is depressed. Perform for HPU #1, HPU #2, and then both together.

6.1.2 Heave Compensator High Voltage Enclosure (ENC8)

Initial for proper function

6.1.2.1 *Power Fault Lamp* - verify that the lamp flashes on initial start-up when turning the HC power switch ON.

6.1.2.2 *Power OK Lamp* - verify lamp is lit when power status is complete and power is OK.

6.1.2.3 *HPU Start* - verify that HC's HPU starts when pushbutton is pressed.

6.1.2.4 *HPU Running Lamp* - verify lamp is lit when HPU is running.

6.1.2.5 *Alarm: Low Oil Level Lamp* - verify the lamp lights and level switch LS-2 operates correctly when hydraulic oil level in reservoir drops below minimum level. Drain reservoir until oil level is about 2½" below LS-2. Further verify the motor will not start when lamp is lit.

6.1.2.6 *Alarm: High Oil Temperature Lamp* - verify lamp is operational by performing the following. Test by removing control knob cover on temperature switch TSH-6 and turning knob down until lamp lights. Reset TSH-6 to 140ºF when finished and replace cover.

6.1.2.7 *Compensator Raise / Lower Toggle Switch* - verify pneumatic circuit engages (will hear motor that turns compressor come on) and heave compensator flying head raises when the switch is pushed to "Raise". Further verify flying head lowers when switch is pushed to "Lower".

6.1.2.8 *HPU Stop* - verify HC's HPU stops when push button is pressed.

6.1.3 Local Control Pedestal (ENC2)

Initial for proper function

6.1.3.1 *HPU #1 Charge Pressure Low Lamp* - verify that lamp lights when activated by pressure switch PSH-1 located on HPU hydraulic panel. Use IMF Efector data sheet 702909/03 for procedures to adjust set points. PSH-1 switch off point should be set to 20 bar (290 psig).

6.1.3.2 *HPU #2 Charge Pressure Low Lamp* - verify that lamp lights when activated by pressure switch PSH-2 located on HPU hydraulic panel. Use IMF Efector data sheet 702909/03 for procedures to adjust set points. PSH-2 switch off point should be set to 20 bar (290 psig).

6.1.3.3 *High Oil Temp Lamp* - verify lamp is lit when oil temperature reaches 140ºF. This may be done by running both HPU motors with cooling water turned off, while ball valves BV-1, -2, -3, -4 are closed (closed-loop). Use LG-1 temperature gauge and temperature strips on reservoir to calibrate. Adjust temperature switch TSH-2 (starboard side of reservoir) as needed. NOTE: May be checked at same time with 6.1.1.3 *Oil Overheat Lamp* at HPU ENC3.

6.1.3.4 *Low Oil Level Lamp* - verify the lamp lights and level switch LS-1 operates correctly when hydraulic oil level in reservoir drops below minimum level. Drain reservoir until oil level is about 2½" below LS-1. Further verify the motor will not start when lamp is lit.

6.1.3.5 *HPU #1 Running Lamp* - verify lamp is lit when HPU #1 is running.

6.1.3.6 *HPU #2 Running Lamp* - verify lamp is lit when HPU #2 is running.

6.1.3.7 *Winch Brake Release Lamp* - NOT checked for End-to-End Test

6.1.3.8 *A-Frame Outboard Lamp* - verify that lamp is lit when A-frame is luffed outboard and is stationary on the hard stops. Verify that the lamp is not lit when the A-frame is not on the stops.

6.1.3.9 *Level Wind Corrector & travel test* - NOT checked for End-to-End Test

6.1.3.10 *Winch/A-Frame HPU Stop Button* - verify both HPU motors shut down when stop button is depressed.

6.1.3.11 *System Emergency Stop Button* - verify both HPU motors and the HC motor shuts down when stop button is depressed.

6.1.3.12 *Low Tension - High Speed Lamp* - NOT checked for End-to-End Test

6.1.3.13 *High Tension - Low Speed Lamp* - NOT checked for End-to-End Test

6.1.3.14 *Tension High/Low* - NOT checked for End-to-End Test

6.1.3.15 *Constant Tension Switch* - NOT checked for End-to-End Test

6.1.3.16 *Constant Tension Enabled Lamp* - NOT checked for End-to-End Test

6.1.3.17 *Line Count Display* - NOT checked for End-to-End Test

6.1.3.18 *Line Speed Display* - NOT checked for End-to-End Test

6.1.3.19 *Line Tension Display* - NOT checked for End-to-End Test

6.1.3.20 *Swing-Frame Control Switch* - verify that when switch is energized, operator has control via the swing frame in/out switch. Verify when switch is turned off, the swing frame should be free to swing (damping mode).

6.1.3.21 *Swing Frame Inboard/Outboard Control Switch* - verify that the swing frame swings inboard when the switch is stroked to the inboard position and outboard when stroked outboard.

6.1.3.22 *Latch Open / Close Switch* - verify that the docking head latches open when the switch is in the open position and closed when the switch is in the closed position.

6.1.3.23 *Winch Haul-In / Pay-Out Joystick* - NOT checked for End-to-End Test

6.1.3.24 *Cursor Winch Haul-In / Pay-Out Joystick* - verify that when joystick is moved to the pay-out position, the cursor winches pay out cable. Move joystick to the haul-in position and the cursor winches should haul in cable.

6.1.3.25 *A-Frame Joystick Luff-In / Luff-Out* - verify that the A-frame luffs in when the joystick is stroked to the luff-in position and luffs out when stroked to the luff-out position

6.1.3.26 *Remote Enable Switch* - verify when the remote is enabled, control of the winch passes to the remote joystick plugged into the control cabin panel. Verify that if the winch joystick on the local control is moved out of center, control reverts to the local control station. Further verify that remote enable is impossible if the winch joystick is out of the center position.

6.1.3.27 *Remote Enable Lamp* - verify that the lamp is lit when the remote is enabled.

6.1.3.28 *Heave Comp. Lock / Unlock Switch* - verify the small HC cylinders (CYL-15, -16) which open and close the ball valves (BV-9, -11) between the primary HC cylinders (CYL-13, -14) and the primary HC accumulators (ACC-1, -2) open the ball valve when switched to “Unlock” and close when switched to “Lock”.

6.1.4 Control Van Panel (ENC5)

Initial for proper function

6.1.4.1 *HPU #1 Charge Pressure Low Lamp* - verify that lamp is lit when HPU #1 charge pressure is less than 290 PSI (20 bar)

6.1.4.2 *HPU #2 Charge Pressure Low Lamp* - verify that lamp is lit when HPU #2 charge pressure is less than 290 PSI (20 bar)

6.1.4.3 *High Oil Temp Lamp* - verify lamp is lit when hydraulic oil temperature in reservoir is more than 150ºF

6.1.4.4 *HPU #1 Running Lamp* - verify that lamp is lit when HPU #1 is running

6.1.4.5 *HPU #2 Running Lamp* - verify that lamp is lit when HPU #2 is running

6.1.4.6 *Winch Brake Release Lamp* - verify that lamp is lit when brake is released by moving winch haul-in/pay-out joystick from center position

6.1.4.7 *Low Oil Level Lamp* - verify the lamp is lit when hydraulic oil level is below minimum level.

6.1.4.8 *Line Count Display* - verify line count increases in value as cable pays out and decreases in value as cable is hauled in. Verify line count calibration by turning the Level Wind sheave 10 revolutions. 1 Rev = 155.27” (12.94’) so 10 Rev’s should read 129.4’ on display.

6.1.4.9 *Line Speed Display* - verify that pay-out readings are positive numbers, and haul-in readings are negative.

6.1.4.10 *Line Tension Display* - verify display reading against a known tension.

6.1.4.11 *Remote Enable Lamp* - verify that lamp is lit when remote is enabled.

6.1.4.12 *Winch Haul-In / Pay-Out Joystick* - verify that when the remote is enabled and the winch joystick is moved to the pay-out position, the winch pays out cable. Move Joystick to the haul-in position and the winch should haul in cable. Further verify that when the remote is not enabled, the winch joystick is inoperable.

6.1.4.13 *Winch / A-Frame HPU Stop Button* - verify both HPU motors shut down when stop button is depressed.

HEAVE COMPENSATOR CONTROLS

6.1.4.14 *HC High Oil Temp Lamp* - verify lamp is lit when hydraulic oil temperature in Heave Compensator reservoir is more the 150ºF

6.1.4.15 *HC Low Oil Level Lamp* - verify the lamp is lit when hydraulic oil level is below minimum level. Further verify the Heave Compensator motor will not start when lamp is lit.

6.1.4.16 *HC HPU Running Lamp* - verify lamp is lit when HC’s HPU is running.

6.1.4.17 *HC Stop* - verify HC’s HPU stops when push button is depressed.

6.1.4.18 *Computer Control Switch* - verify “Computer Control Enabled” lamp is lit when this switch is toggled into “Enable” position. Further verify this lamp is NOT lit when the switch is toggled into “Disable” position.

6.1.4.19 *Computer Control Engaged Lamp* - verify motion compensation software is controlling the action of the heave compensator when this lamp is lit. The sequence required for this lamp to light is as follows:
1. Toggle the “Computer Control” switch into the “Enable” position.
2. The “Computer Control Enabled” lamp will light sending a signal to motion control software. The software will begin to position primary heave comp. accumulators and cylinders for mid-stroke. Observe on the CPU user screen in bottom left-hand corner the “Preparing Active Control” button will be lit. Once positioning is completed, the computer takes over and lights the Control Van Panel “Computer Control Engaged” Lamp. Also observe on the CPU user screen the “Computer Control Engaged” button will also be lit. Further verify NEITHER of the lamps on the Control Van Panel (and neither of the buttons on the CPU user screen) are lit when the “Computer Control” switch on Control Van Panel is toggled into the “Disabled” position.

6.2 HYDRAULIC POWER UNIT PRESSURE SETTINGS VERIFICATION

The following procedures are utilized to verify the pressure relief settings of the pumps. It is assumed that winch and level wind are securely mounted to the deck and the HPU is connected to the winch.

6.2.1 HPU Factory Preset Pressure Settings

Pressure settings are factory preset and these values should not need to be adjusted *unless* a malfunction clearly indicates degraded equipment performance at start-up. Refer to Table 20 below for the HPU Hydraulic System initial pressure settings. Consult Reference A for maintenance procedures to correct any unsatisfactory settings and re-test.

Table 20: HPU Hydraulic System Initial Pressure Settings

DESCRIPTION	PRESSURE (PSI)
Winch Pump HP-1A and HP-2A, "A" Port	4,200
Winch Pump HP-1A and HP-2A, "B" Port	2,500
Charge Pump HP-1A and HP-2A	350
Open Loop Circuit Level Wind Circuit Auxiliary Circuit	3,000
0 & K Gearbox Brake Release Pressure	218
Compensator Pump HP-3 Charge Pressure	300
Compensator Pump HP-3	3,000
Tank Nitrogen Pressure Relief Setting	5

6.2.2 HPU Pump #1 Relief Settings Verification

Verify HPU Pump #1 pressure settings by utilizing the following steps:

6.2.2.1 Disable the failsafe brake release pressure by removing the connector off of the brake release solenoid valve.

6.2.2.2 *Charge Pressure Relief Setting* - read charge pressure gauge on HPU gauge panel (nominally set at 320 psig)

Record pressure here: _____ psig

6.2.2.3 ***A** Port Relief Setting* - read **A** Port pressure gauge on HPU gauge panel while stroking the pump controller to full stroke **A** Port (nominally set at 4200 psig)

Record pressure here: _____ psig

6.2.2.4 ***B** Port Relief Setting* - read **B** Port pressure gauge in HPU gauge panel while stroking the pump controller to full stroke **B** Port (nominally set at 2500 psig)

Record pressure here: _____ psig

6.2.2.5 *Open Loop Pump Relief Setting* - read auxiliary pressure gauge on HPU gauge panel (nominally set at 3000 psig)

Record pressure here: _____ psig

6.2.2.6 *Level Wind Pressure Setting* - read level wind pressure gauge on HU gauge panel (nominally set at 3000 psig)

Record pressure here: _____ psig

6.2.3 HPU Pump #2 Relief Settings Verification

Verify HPU Pump #2 pressure settings by utilizing the following steps:

6.2.3.1 Disable the failsafe brake release pressure by removing the connector off of the brake release solenoid valve.

6.2.3.2 *Charge Pressure Relief Setting* - read charge pressure gauge on HPU gauge panel (nominally set at 320 psig)

Record pressure here: _____ psig

6.2.3.3 ***A** Port Relief Setting* - read **A** Port pressure gauge on HPU gauge panel while stroking the pump controller to full stroke **A** Port (nominally set at 4200 psig)

Record pressure here: _____ psig

6.2.3.4 ***B** Port Relief Setting* - read **B** Port pressure gauge in HPU gauge panel while stroking the pump controller to full stroke **B** Port (nominally set at 2500 psig)

Record pressure here: _____ psig

6.2.3.5 *Open Loop Pump Relief Setting* - read auxiliary pressure gauge on HPU gauge panel (nominally set at 3000 psig)

Record pressure here: _____ psig

6.2.3.6 *Level Wind Pressure Setting* - read level wind pressure gauge on HPU gauge panel (nominally set at 3000 psig)

Record pressure here: _____ psig

6.3 LAUNCH & RECOVERY SYSTEM (WINCH, LEVELWIND, A-FRAME) TESTS

6.3.1 FTHE Manual Controls Functional Verification Test

The following procedures are utilized to verify the proper function of the FTHE LARS manual controls and verification of full range of motion.

Initial for proper function

6.3.1.1 Secure the LARS to test area deck. Connect HPU to the LARS and to the appropriate power source. Power up HPU and verify that all hydraulic connections are leak free.

6.3.1.2 Make sure all personnel are clear of the LARS system.

6.3.1.3 Stroke Luffing Directional Control Valve (DCV) in the luff out position and verify the LARS moves in that direction. Allow the system to travel it's full range of motion and ensure there are no interference problems.

6.3.1.4 Stroke Luffing DCV in the luff in position and verify the LARS moves in that direction. Allow the system to travel its full range of motion and ensure there are no interference problems.

6.3.1.5 Stroke Cursor Lift Winch DCV in the Haul-in position and verify the cursor lift winches move in that direction. Allow the system to travel it's full range of motion and ensure there are no interference problems.

6.3.1.6 Stroke Cursor Lift Winch DCV in the Pay-out position and verify the cursor lift winches move in that direction. Allow the system to travel it's full range of motion and ensure there are no interference problems and the cursor depth limit sensor functions properly.

6.3.1.7 Stroke Docking head DCV in the swing in position and verify the docking head moves in that direction. Allow the system to travel it's full range of motion and ensure there are no interference problems.

6.3.1.8 Stroke Docking head DCV in the swing out position and verify the docking head moves in that direction. Allow the system to travel it's full range of motion and ensure there are no interference problems.

6.3.1.9 Stroke the docking head latch DCV to the open position and ensure the latches fully open and latch indicators move to the open position.

6.3.1.10 Stroke the docking head latch DCV to the closed position and ensure the latches fully close and latch indicators move to the closed position.

6.3.2 A-Frame Docking Head Latch Test

The following procedures are utilized to verify the docking head latches perform properly and will not release the cursor while under load (light or heavy), to check the function of the cursor lift winches and cursor depth stop sensor, and to load check the cursor / cursor latches.

WARNING

A-Frame load tests involve operating equipment to raise, lower, and move heavy equipment. Death, injury, or equipment damage is possible if not done safely. All personnel must be aware of action to be taken in order to maintain a safe operation. FTHE Operators and the Deck Leader should be the only persons in the area around A-Frame during test.

6.3.2.1 Ensure the A-Frame is secured to deck. Power up HPU and verify that all hydraulic connections are leak free.

6.3.2.2 Luff LARS to the fully overboard position and ensure the latches are closed.

6.3.2.3 Raise the cursor by stroking the cursor lift winch control.

Initial for proper function

6.3.2.4 Continue to raise the cursor until latching occurs.

6.3.2.5 Stroke latch DCV to open position and ensure latches will not open.

6.3.2.6 Haul in on the cursor winches to relieve the load on the latches, and move the docking head latch switch to the "Unlatch" position. Lower the cursor until clear of the docking head. Continue lowering until the "cursor depth limit sensor" stops the cursor winches. Measure the amount of cable that would be "below the deck" if the ground were the deck of the boat. It should be 31 feet (8m in the water +5 foot of freeboard). Cable below deck is: _____ feet Initials: _____

Test Shape Docking Interface Notes:

The cursor will obviously stop on the ground and act as if the umbilical has taken the load of the Test Shape. Have two men provide back tension on the cursor winch wire ropes once Test Shape is on the ground in order to check limiter switch of the cursor winches. The cursor winch wire ropes are to be pulled to the point that the limit switches are engaged.

Initial for proper function

6.3.2.7 Lower the cursor down onto the Test Shape loaded to weigh at least 42,500 lbf. Check for proper cursor latching. Do this several times in order to fully observe the cursor latch ratchet cycle.
(Note: Misaligned / offset cursor latching is covered in the "Cursor Latch Engagement Test"). Begin to raise the cursor.

6.3.2.8 Using each HPU individually, and then together, record the Open Loop Pressure, Motor Current, Oil Temperature here:

HPU #1:	Motor Current	_____
	Open Loop Pressure	_____
	Oil Temperature	_____
HPU #2:	Motor Current	_____
	Open Loop Pressure	_____
	Oil Temperature	_____
HPU #1& #2:	Motor Current	_____
	Open Loop Pressure	_____
	Oil Temperature	_____

Initial for proper function

6.3.2.9 Continue to raise the cursor until latching in the docking head occurs.

6.3.2.10 Now that the cursor depth limit sensor is set, disengage the Test Shape interface. Haul in on the cursor winches. Record the time from full cursor deployment to fully latched in the docking head here:

6.3.2.11 Haul in on the cursor winches to relieve the docking head latches and hold the latch switch in the "Open" position. Payout on the cursor winches. Record the time from this point to full deployment of the cursor n table below.

	TIME UP	TIME DOWN
HPU #1:		
HPU #2:		
Both #1 & #2		

6.3.3 A-Frame Assembly Luffing Test **Note: *Field Edit***

A dynamic load test is required on the A-Frame Assembly prior to commencing normal FTHE operations. However, the End-to-End base pads fro A-Frame are not rated for dynamic loads, such that the Luffing Test shall be performed with no test weight. This test will verify A-Frame range of motion.

WARNING

A-Frame load tests involve operating equipment to raise, lower, and move heavy equipment. Death, injury, or equipment damage is possible if not done safely. All personnel must be aware of action to be taken in order to maintain a safe operation. FTHE Operators and the Deck Leader should be the only persons in the area around A-Frame during test.

6.3.3.1 Disable constant tension.

6.3.3.2 Pay out on the cursor winch only enough until the cables are visibly slack.

6.3.3.3 Secure HPU-1 and HPU-2 for 10 minutes simulating a loss of power to the HPU Assembly. (This tests the Umbilical Winch brake holding capabilities.)

6.3.3.4 Resume power to HPU-1 and HPU-2.

CAUTION

Do not haul in the cursor cables too far creating slack in the umbilical cable. This may cause a loose wrap on the umbilical winch drum.

6.3.3.5 Remove only the slack in the cursor winch cables.

6.3.3.6 Place the umbilical winch in the constant tension mode.

6.3.3.7 Luff the A-Frame Assembly fully inboard.

6.4 HEAVE COMPENSATOR TESTS

6.4.1 Heave Compensator Umbilical Reeve Training

The following procedures should be performed as a training exercise to help familiarize operational personnel on how to properly reeve the umbilical onto the Heave Compensator's sheaves.

WARNING

DANGER TO PERSONNEL! Death or injury can result when working around operating machinery or from falls from high elevations while routing the umbilical cable. To prevent death or injury, keep back from immediate contact with operating machinery and pay attention to safe footing when working at high elevations.

CAUTION

DAMAGE TO EQUIPMENT! The umbilical cable can be damaged if the bend radius is less than 20 inches, the cable jacket is allowed to pass over sharp bends, or rough surfaces. Do not allow the umbilical cable to be subjected to a bend radius of less than 20 inches or pass over sharp bends or rough surfaces.

To route the umbilical through the HC Assembly, perform the following steps:

a. Open the forward and aft HC Assembly lower level access doors.

b. Remove the mounting hardware and sheave cable guides from the lower head assembly (DD 0707-7001-01, Item 1). (See Figure 5)

Figure 5: HC Lower Head Assembly

c. Remove the mounting hardware and flying head top compression weldment (DD 0707-7001-03, Items 17, 18, 19, 20, and 10). (See Figure 6)

Figure 6: HC Flying Head Assembly – Top View

d. Pay out umbilical cable as required keeping in mind the bend radius requirement.

e. Position at least two personnel in the upper level of the HC Assembly ready to receive the junction box and cable.

f. Securely attach a rope to the junction box and pass the rope under the bottom, starboard sheave and on up to the upper level personnel.

g. Pull the junction box/cable up and over the top, starboard sheave and back down to the bottom of the HC Assembly.

h. Guide the umbilical cable into the bottom, middle sheave and again pass the rope/junction box to the upper level personnel.

i. Pull the junction box/cable up and over the top, port sheave and back down to the bottom of the HC Assembly.

j. Guide the umbilical cable into the bottom, port sheave and exit the HC Assembly through the aft access door.

k. Reinstall the flying head top compression weldment and mounting hardware.

l. Reinstall the sheave cable guides and mounting hardware on the lower head assembly.

m. Close and secure the forward and aft HC Assembly lower level access doors.

6.4.2 Heave Compensator No-Load Functional Test

Note: *Field Edit*

[This page intentionally left blank]

APPENDIX A – SAFETY PLAN

1.0 SAFETY PLAN INTRODUCTION

The safety precautions set forth in NFESCINST 5100.11J will be observed during all phases of these offshore operations. The personnel involved with this offshore operation will attend a mandatory safety briefing conducted on the vessel prior to the start of at-sea operations.

All members of the project team have an obligation to work in a safe manner at all times. Under normal operating conditions, the proposed project operations pose no electrical or mechanical hazards. However, some of the equipment involved operates with voltages that are potentially hazardous and major system components are heavy; therefore handling operations should be conducted with careful consideration of proper procedures.

Detailed descriptions of general safety principles, standard workshop practices, or service operations should be both understood and practiced by professional operational crew, and therefore are *not* contained in this safety plan. This safety plan does contain warnings and cautions about using specific service methods that could cause injury to personnel or damage equipment. The fact that no warnings or cautions are given for any specific service method does not mean that no safety risk is involved.

2.0 PERSONNEL RESPONSIBILITIES

Safety is the responsibility of all cruise personnel. Each and every member of the project team has the responsibility and authority to halt any operation they deem unsafe. Each person should monitor the condition of other personnel working with him or her, to ensure the safety of all concerned.

All personnel involved in cruise operations should review this safety plan; it is their responsibility to read all the precautions thoroughly before performing their respective tasks. If a procedural error or safety issue is discovered, operators and/or technicians should discontinue use of the procedure in question and notify the Safety Observer at once.

All personnel are responsible for their own safety protective equipment appropriate for each operation, including but not limited to: hard hats, steel-toe boots, work gloves, safety glasses, and hearing protection.

3.0 PRELIMINARY HAZARD ANALYSIS

3.1 HAZARD SEVERITY

A Preliminary Hazard Analysis (PHA) for each phase of the project execution is based on Hazard Severity. An assessment of the worst potential consequence is defined by the degree of injury, occupational illness, or an environmental release, which could conceivably occur. Hazard Severity categories are identified by Roman numerals and defined as follows:

Category I – Catastrophic: The hazard may cause death or release of a hazardous material at its reportable quantity, or loss/contamination of a facility.

Category II – Critical: May cause severe injury, or release of a hazardous material, or major contamination (property damage).

Category III – Marginal: May cause minor injury, or release of a hazardous material within the confines of a facility's boundaries or minor contamination (property damage).

Category IV – Negligible: Probably would not affect personnel safety or health, or release of a hazardous material within a confined location.

3.2 MISHAP PROBABILITY

The probability that a hazard will result in a mishap is based on an assessment of such factors as location, exposure in terms of cycle or hours of operation, and affected population. Mishap Probability is assigned an Arabic letter according to the following criteria:

Subcategory A – Likely to occur immediately or within a short period of time

Subcategory B – Probably will occur in time

Subcategory C – May occur in time

Subcategory D – Unlikely to occur

3.3 RISK ASSESSMENT CODE (RAC)

The Risk Assessment Code is an expression of risk and combines the elements of Hazard Severity and Mishap Probability. The RAC is expressed as a single number that can be used to help determine hazard abatement priorities. RAC Codes are provided in Table A-1. Projects given a RAC of 1 or 2 shall undergo further system safety evaluation and analysis. In all cases, hazards identified in the hazard analysis shall be eliminated or controlled.

Table A-1: Risk Assessment Codes

HAZARD SEVERITY	MISHAP PROBABILITY			
	Subcategory A	Subcategory B	Subcategory C	Subcategory D
Category I	1	1	2	3
Category II	1	2	3	4
Category III	2	3	4	5
Category IV	5	5	5	5

Table A-2 contains a list of general hazards to heavy lift equipment operations, including the Hazard Severity, Mishap Probability, and RAC ratings. Applicable control measures and special work practices are briefly described to prevent or mitigate potential hazards from occurring.

Table A-2: Lifting & Line Handling Operations

Hazard	Triggering Event	Hazard Severity	Mishap of Probability	RAC
1) Injury from rigging, lifting and hoisting	Hoisting and lifting operations	II	C	3
Control Measures	**Applicable SOP's**	**Special Work Practices**		**HAZMAT**
a) Ensure operators are trained to use hoisting and lifting equipment. b) Use load tested and certified rigging hardware.	a) NAVFAC P-307 "*Management of Weight Handling Equipment*" b) Applicable Weight Handling Equipment Operating Manuals	a) Wear personal safety equipment (hard hats, gloves, and eye/ear protection). b) Use defined hand signals. c) Watch for pinch points under revolving sheaves, underneath loads, between swinging loads & structures. d) Use tag lines to control load while lifting. e) Personnel stay clear of suspended loads and deck winch wires.		N/A

Table A-3 contains a list of hazards unique to the operations required for this particular project, including the Hazard Severity, Mishap Probability, and Risk Assessment Code (RAC) ratings.

Table A-3 Hazards Unique to This Project's Operations

EVENT DESCRIPTION	HAZARD SEVERITY	MISHAP PROBABILITY	RAC
Crane failure w/personnel beneath load	I	D	3
A-frame failure w/personnel beneath load	I	D	3
Parting line or lifting cable	I	D	3
Premature release of project hardware on deck	II	D	4
Personnel caught in cable or line bite	III	C	4

The "Special Safety Precautions" section in this Appendix contains procedures that shall be followed to reduce the potential risks associated with these particular offshore operations.

4.0 MEDICAL SURVEILLANCE AND TRAINING

No special medical surveillance is deemed necessary for this project's operations. Naval Base Ventura County (NBVC) has first responder trained personnel available on-call.

5.0 HAZARDOUS WASTE OPERATIONS

No hazardous waste will be generated as a result of project operations.

6.0 INDUSTRIAL HYGEINE

No confined spaces will be occupied. Therefore, no air monitoring is required.

7.0 SITE CONTROL MEASURES

The Project Manager will be the central point of contact for project operations.

8.0 SPECIAL SAFETY PRECAUTIONS

The Safety Observer has full control of the safety aspects and his directions shall be heeded at all times. Some of the hazards typical to these operations are identified below. All personnel in the operations area shall be aware of them and avoid them.

- Watch for and avoid trip hazards or slip hazards from spilled oil
- Stand clear of all lines and wires (under tension or slack)
- Use proper lifting techniques for heavy objects
- Use proper lifting equipment for each lift
- Watch for and avoid swinging loads
- Stand clear of forklift operations and crane operations
- Be cautious around high pressure hydraulic systems
- Be aware of other personnel to prevent injury to them

8.1 EQUIPMENT AND MACHINERY

Only properly trained personnel will be allowed to operate project equipment. Personnel shall not operate unfamiliar equipment or machinery. Any person may stop any movement or operation of machinery or equipment at any time in order to prevent bodily harm and/or damage to that machinery or equipment.

8.2 WEIGHT HANDLING EQUIPMENT

Follow operational procedures and safety precautions listed in NAVFAC P-307 "*Management of Weight Handling Equipment*". This publication provides requirements for the maintenance, inspection, test, certification, repair, alteration, operation, and/or use of weight handling equipment (WHE) under the technical cognizance of the Naval Facilities Engineering Command (NAVFAC).

Only qualified personnel will operate WHE. Operations that include WHE are inherently hazardous. NFESC technicians and professional contractors operate under these conditions on a regular basis and have developed procedures to minimize risk. Project observers and data collectors are not as seasoned for these conditions; therefore, they should exercise extreme caution to avoid hazardous conditions and to keep clear of ongoing operations.

8.3 OPERATIONAL CONSIDERATIONS

A-Frame/Winch/Heave Comp Operations. All A-Frame/Winch/Heave Comp operations will be conducted only by properly trained and qualified personnel.

Tensioned Lines. Tensioned lines will be monitored by the Safety Observer and Deck Leader. Project personnel will be directed to not stand near any lines or cables under tension.

Line Bights. Slack lines that are being utilized will be monitored by the Safety Observer and Deck Leader. Project personnel will be directed to not stand near any working line, especially not in the bight of any line that is being used.

Crane Operations. Any cranes used for this project will be fully functional at the start of operations. It is possible that a failure with the crane could occur, but all project personnel will be directed to ***not*** go beneath the crane or load during crane operations. The loads that the crane will be moving for this project's operations shall be below the safe working lift capability of the crane.

All crane operations will be directed by the Deck Leader. All personnel required in operations area shall wear hard-hats and safety shoes whenever overhead lifts are performed. No unnecessary personnel will be present in deck area when crane operations are in progress. The designated Safety Observer and Deck Leader will observe the crane and surrounding area during all lifts.

A-Frame Operations. The A-frame will be fully functional at start of operations. It is possible that a failure with the A-frame could occur, but all personnel will be directed to ***not*** go beneath the A-frame or load that the A-frame is moving. No unnecessary personnel will be present near the A-frame when operations are in progress. All A-frame operations will be directed by Deck Leader. Loads that the A-frame will be lifting are well below the A-frame's safe working lift capability.

9.0 PROJECT SAFETY PRECAUTIONS

9.1 GENERAL PRECAUTIONS

The Project Manager will hold a meeting to instruct all appropriate personnel in the project's specific safety instructions prior to operations.

The Project Manager will take attendance of personnel required for upcoming operations and check that all needed equipment is prepared. If there are not sufficient personnel available and/or if any piece of equipment is inoperable that would prevent the operation from being performed safely, then operations will be delayed until properly resourced.

The Deck Leader will brief the gathered operational personnel on procedures to be accomplished during each operation task to follow. Operational participants should acknowledge an understanding of their respective responsibilities.

The Safety Observer shall give a Safety Brief to all personnel prior to initial operations. Issue(s) brought up during briefing that is not specifically addressed in this safety plan shall be discussed and resolved to ensure safe operations.

The Safety Observer shall ensure all safety procedures and precautions are followed during project operations.

9.2 ACCIDENT RESPONSE

Accident Report forms will be available at the operational work site. This form shall be completed for any incidence involving personnel injury while performing project related duties. All accidents or incidents that result in an occupational injury, illness and/or property damage shall be investigated.

A first-aid kit will be made available at the operational work site at all times. The contents will be checked and restocked regularly.

Personnel injuries shall be reported to the Safety Observer as soon as they happen and first-aid treatment immediately applied. Available personnel trained in first aid will treat injuries as best as possible, evaluating if nature of the injury may require medical emergency response.

9.3 MEDICAL EMERGENCY RESPONSE

In the event of a medical emergency at the operational work site, the Project Manager will be responsible for communications at the site.

The following are response steps to be taken in case of a medical emergency:

Call the emergency number 911.

Notify appropriate NFESC manager of the emergency immediately after contacting 911 in order to keep them apprised of the situation.

Local Medical Facilities

Nearest First Aid Station: SRB Building 1393 Bay “B”

Nearest Medical Clinic: NBVC Naval Ambulatory Care Center
162 First Street, Port Hueneme, CA
(805) 982-6370

Nearest Hospital: St. John’s Regional Medical Center
1600 N. Rose Ave, Oxnard, CA
(805) 988-2500

9.4 FIRE HAZARD

The **NBVC Fire Department (805) 982-4352** shall be notified immediately in event of serious fire hazard that cannot be quickly exterminated by project team.

Any occurrence of fire shall be reported immediately to the Project Manager.

Personnel that are trained in basic fire extinguishing techniques will use available fire fighting equipment to extinguish or contain fire hazard.

The Safety Observer will notify project participants in the area of what to do in the case of a fire, following procedures outlined during the mandatory safety briefings.

9.5 OIL SPILL RESPONSE

If an oil spill occurs, responsible personnel will take immediate action to:

1) Stop the flow of product – stop transfers, secure pumps, close valves;

2) Warn personnel – sound alarms, enforce safety and security actions;

3) Shut off ignition sources – motors, electric circuits, open flames;

4) Initiate containment – block drains, deploy absorbents or boom; and

5) Make notifications – inform supervisors and managers.

All spills are considered to be an emergency whether or not there is potential life, health, fire or other safety hazards.

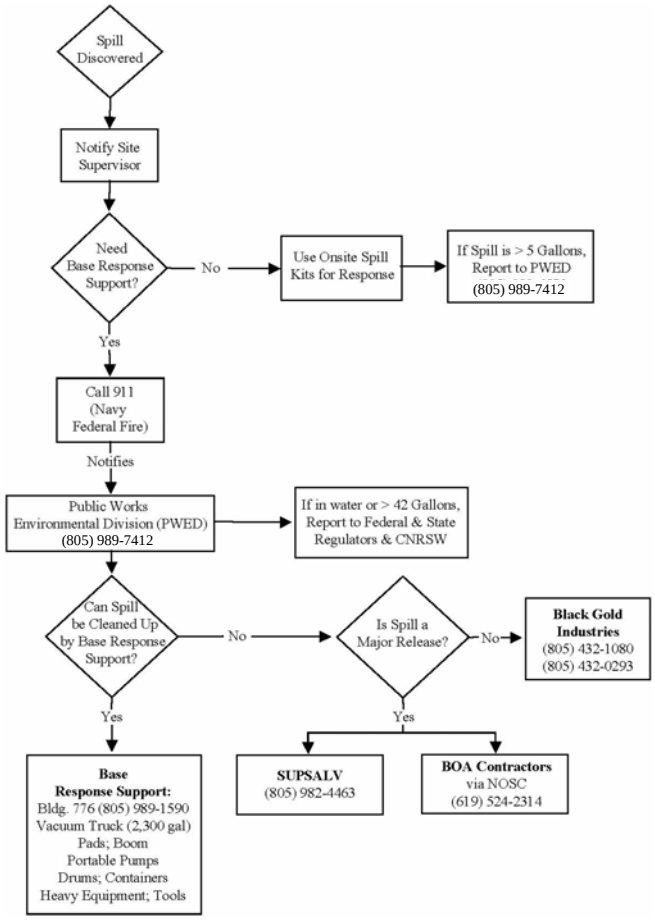

Fuels operators, public works personnel, security personnel, safety personnel, and port operations personnel with the fire department, serve as the **Facility Response Team** (**FRT**) and are the initial responders to a spill. The **FRT** will clean up a spill if it is within its capabilities to do so.

Other Navy spill response resources will be called to assist in clean up of larger spills and those migrating off the base.

The **NBVC Fire Department (805) 982-4352** shall be notified immediately of spills that are greater than five gallons, enter any drain, contaminate soil or are beyond the capability of the activity to handle.

Public Works Naval Base Ventura County
(805) 989-8501 (Office) or 24-hour: (805) 989-7209

SAFETY PLAN SIGN-OFF SHEET

(Submit to ESC092 upon completion)

The following personnel have read and understand this Safety Plan for conducting the intended operation, and have attended the pre-operation safety meeting.

Project Manager	Date
Deck Leader	Date
Safety Observer	Date

DEPARTMENT OF THE NAVY
Naval Facilities Engineering Service Center
1100 23rd Avenue
Port Hueneme, CA 93043-4370

TEST PLAN

Testing of the Field Test Handling Equipment (FTHE)
Smart Load 1-Atmoshere Bottle

Submitted By: _____ _____
OP52/Meza Date

Reviewed By: _____ _____
OP51/Kilpatrick Date

Reviewed By: _____ _____
OP51/Petro Date

Approved By: _____ _____
OP50/Wells Date

TABLE OF CONTENTS

Page

1.0 INTRODUCTION…… 1

2.0 APPROACH……. 1

3.0 OPERATING PROCEDURES AND TESTING……. 2

APPENDIX A: PRESSURE TEST DATA SHEET……. A-1

1.0 INTRODUCTION

As part of the transfer of the Field Test Handling Equipment (FTHE), the Naval Facilities Engineering Service Center (NFESC) has been tasked with making several modifications to the existing system. One of those modifications includes the addition of a 1-Atmosphere (1-atm) bottle to be used on the system's test shape as an enclosure for sensor interfaces. This test plan has been developed to evaluate the ability of the 1-atm bottle to operate in the deep ocean environment (high hydrostatic pressure). The 1-atm bottle is rated for 20,000 psig, and the limiting penetration is rated for 7,500 psig.

2.0 APPROACH

The NFESC 24-inch diameter pressure vessel will be utilized to simulate deep ocean conditions (i.e., high pressure). The pressure vessel will be filled with fresh water. In effort to decrease the amount of implodable force in case of a failure, as well as provide a means of detecting leaks, the 1-atm bottle will be filled with a desiccant substance to about 80% of its total volume.

The 1-atm bottle, which is comprised of three (3) parts (cylindrical body with 2 end caps), has a total of nine (9) penetrations on one of the end caps (see Figure 1). As shown in Figure 1, five (5) of those penetrations are bulkhead connectors, and thus, will be mated with their corresponding pressure plugs during the pressure test[1].

Figure 1 – End cap for 1-atm bottle with nine (9) penetrations

The 1-atm bottle will undergo ten (10) pressure cycles from 0 to 5,000 psig; it will be held at the high limit for ten (10) minutes for cycles one (1) through nine (9), and held for one (1) hour at the greatest pressure for cycle ten (10).

[1] Each bulkhead connector mated with its corresponding pressure plug is rated for 7,500 psig or above.

3.0 OPERATING PROCEDURES AND TESTING

The activities described in this test plan are performed routinely as part of the Deep Ocean Simulation Facility's (DOSF) effort to provide technical support for ocean applications.

The DOSF pressure vessel control system has the ability of regulating the rate of pressurization, and thus, will not exceed 500 psig per min for this particular test.

Data shall be recorded on the sheet shown in Appendix A.

APPENDIX A

PRESSURE TEST DATA SHEET

FIELD TEST HANDLING EQUIPMENT 1-ATMOSPHERE BOTTLE PRESSURE TEST DATA SHEET

EQUIPMENT INFORMATION	
FTHE 1-Atmosphere Bottle	Operational Pressure: 2,000 psig
	Maximum Rated Pressure: 7,500 psig
	Test Pressure: 5,000 psig
Test Technician: Mark Wells/Fernando Ruiz	Test Date: June 12,2007

TEST FACILITY INFORMATION			
Facility Title:	NFESC DOSF	Gauge Model	Heise
Pressure Chamber ID:	72” Chamber	Gauge Serial Number	S9-30228
Test Temperature (°F):	65-75 °F	Last Calibration Date	05/2007
Gauge Pressure Range:	0 - 6,000 psi	Next Calibration Due	05/2009

Cycle	Test Pressure	Start Time	End Time	Hold Time @ Max Pressure	Initials
1	psig	:	:		
2	psig	:	:		
3	psig	:	:		
4	psig	:	:		
5	psig	:	:		
6	psig	:	:		
7	psig	:	:		
8	psig	:	:		
9	psig	:	:		
10	psig	:	:		

ATTACHMENT 2 – FTHE ENGINEERING DOCUMENTATION

Attachment 2 was established to compile any pertinent engineering documentation for FTHE. Including these documents as part of the FTHE Operations and Maintenance Manual will provide a means of controlling them in the FTHE Configuration Management Plan.

MAR CALCULATIONS FOR M/V *INDEPENDENCE* DECK INSERTS & REINFORCEMENTS

The M/V *Independence* is utilized as a platform for conducting DWT operations using FTHE deck gear. As this gear will be mobilized and demobilized several times for operations, a series of threaded deck inserts were installed in the main deck near the stern area. These threaded deck inserts were sized, placed and reinforced sufficiently to support the anticipated loading of the FTHE equipment in sea states up to 5 for transit and for sea states up to 2 for operations. This engineering analysis was performed to prove the structural integrity of the threaded deck inserts and the adjacent structure for use with this deck equipment bolt-on system.

MAR CALCULATIONS FOR M/V *INDEPENDENCE* DECK INSERTS, MEMO 2-15-2008

Provides calculations to determine recommended torque values for 1”-8UNC grade 8 bolts into the M/V *Independence* special stainless steel deck inserts, to be used by all FTHE equipment.

FTHE A-FRAME ALIGNMENT REPORT

During the latest deep water training session as well as the session prior to the 2005 FTHE refurbishment, a loud banging noise occurred during the A-Frame luffing sequence. The 2005 DWT session saw the banging return midway through the training. The magnitude of the noise reduced and in most cases eliminated by operating the A-frame luffing control at a drastically reduced speed near the point of being fully luffed out. The concern was that the condition of the hardware was changing (banging was gone but returned) and that stresses were being applied to parts of the A-Frame during the banging which over time, could result in equipment damage.

[This page intentionally left blank]

January 12, 2004

M/V INDEPENDENCE

CALCULATIONS FOR:
PROPOSED DECK INSERTS AND UNDER-DECK REINFORCEMENT TO SUPPORT A BOLT-ON A-FRAME AND PROJECT RELATED EQUIPMENT

1. SCOPE:

The M/V Independence is to be utilized as a platform for conducting operations using the Navy Blue Gear. As this gear will be mobilized and demobilized several times for the intended operations, a series of threaded deck inserts are to be installed in the main deck near the stern area. These threaded deck inserts have been sized, placed and reinforced sufficiently to support the anticipated loading of the Blue Gear equipment in sea states up to 5 for transit and for sea states up to 2 for overboarding operations. The following engineering analysis is provided to prove the structural integrity of the threaded deck inserts and the adjacent structure for use with this bolt-on system.

2. DESIGN CRITERIA:

According to the information provided by the Naval Facilities Engineering Service Center (NFESC) for the Navy Blue Gear Project MAR Incorporated is to perform a structural analysis for the afterdeck of the M/V Independence with the Blue Gear bolted-on. This analysis shall be used to determine if any reinforcement will be required to the deck to support over-boarding operations in Sea State 2 and transits in Sea State 5. This report is hereby provided to satisfy the American Bureau of Shipping (ABS) requirements for such work. A detailed design drawing has been prepared to show the placement of the Blue Gear equipment on the M/V Independence's afterdeck, which is included as an attachment to this report. This drawing will be forwarded to ABS along with this report for review and approval prior to any installation work, as is required for an ABS classed vessel such as the M/V Independence.

The static design load to be used for the analysis of the Blue Gear A-Frame attachment to the vessel's deck is 68,000# plus the weight of the vehicle, which is 34,000 #. This yields a total shipboard static weight of 102,000#. The deck inserts and the underdeck stiffening must be shown to be sufficient to support the load of both the A-Frame and the vehicle.

The static design load to be used for the analysis of the Blue Gear Heave Compensator attachment to the vessel's deck is 32,000#. The deck inserts and the

underdeck stiffening must be shown to be sufficient to support the load of the Heave Compensator.

The static design load to be used for the analysis of the Blue Gear Winch attachment to the vessel's deck is **33,670#**. The deck inserts and the underdeck stiffening must be shown to be sufficient to support the load of the Winch during both transit in Sea State 5 conditions and in Sea State 2 conditions for operations.

3. ASSUMPTIONS:

The following assumptions are made in order to obtain a simplified but reasonable analysis.

- The areas of greatest stress will be where the A-Frame is attached to the afterdeck at the attachment bolts and threaded deck inserts and the structural welds that secure the threaded inserts to the vessel's structure.
- The primary forces on the bolts and welds will be tensile and/or shear in nature.
- The A-Frame and its Base are considered sufficiently rigid to be considered a single body for the purpose of these calculations.
- The maximum moment the base will experience will be when the A-Frame is in the full aft extension with the maximum Safe Working Load.
- The maximum acceleration of the masses will occur in Sea State 2 conditions during deployment and will be vertical in nature.
- The A-Frame structure is sufficient for the design load intended. Analysis of the A-Frame and its base is beyond the scope of this report. The analysis contained in this report is only concerned with the structural integrity and safety of the vessel and its structure.
- The weight of the small bolt-on hydraulic power pack system that is to be used to support the Blue Gear system is assumed to be too small to be considered in the structural calculations therefore it will not be addressed in this report.

4. A-FRAME, VEHICLE, HEAVE COMPENSATOR AND WINCH SPECIFICATIONS:

A-FRAME AND VEHICLE

The Blue Gear A-Frame is an all-steel welded structure consisting of a pair of steel base plates and a large hydraulically operated A-Frame arm. The static weight for this A-Frame system is 68,000#. The vehicle is not defined but has a static in-air weight of 34,000#.

HEAVE COMPENSATOR

The Blue Gear Heave Compensator is an all-steel welded structure consisting of a large welded steel framework supporting a heave compensator pulley system. The static weight for this Heave Compensator system is 32,000#.

WINCH

The Blue Gear Winch is a large hydraulically operated oceanographic winch that is mounted onto a large welded steel framework. The static weight for the Winch is 33,670#.

HYDRAULIC POWER UNIT (HPU)

The HPU is used to power the Blue Gear Deck equipment and has a static weight of 12,100#.

5. DYNAMIC LOADING:

The dynamic loads generated by the motion of the M/V Independence in a seaway have been previously calculated in accordance with Section 301 of Mil Standard 1399, "Ship Motions and Attitudes". This provides estimated load factors for any point desired on the vessel based on the vessel's dimensioning and stability characteristics. A summary of these calculations is provided in the attached table.

6. FORCE AND MOMENT CALCULATIONS FOR THE BLUE GEAR A-FRAME AND SUSPENDED/TOWED VEHICLE INSTALLATION

The A-Frame is mounted in the starboard aft deck location will produce slightly higher accelerations due to the combined effect of both pitch and roll. These values will be used in the analysis as a worst case scenario for transits and towing operations in Sea State 5 conditions. As the Blue Gear Vehicle will be only deployed in conditions of Sea State 2 or less, the worst case loading will not occur during these operations. Only the towing operations in a worst case Sea State 5 condition will be considered for the purposes of these calculations. Standard engineering techniques will be used to determine the forces acting on the deck insert bolts and the weld areas associated with the deck inserts.

a. A-Frame and Vehicle Reactions Force Calculations for the Deck Insert System

The deployed Blue Gear Vehicle, under tow, will cause a rotational moment to be applied to the A-Frame foundation. The bolts and the deck inserts will resist this rotational moment, with the moment applied near the midpoint of the foundation. The Blue Gear project engineers have prepared a force diagram representing the forces applied to the A-Frame foundation in the worst case configuration, which is shown in the Case 3 Towing Configuration Drawing included with this report. As can be seen in the force diagram, the forward A-Frame Foundation bolts will be under tension and the aft foundation bolts will be in compression.

b. Static Load Analysis

According to the Blue Gear A-Frame Case 3 Towing Configuration Force Diagram, the maximum tensile loading on the forward end of the A-Frame

bases is 8,655 lbs./ft² tensile. On the aft end of the A-Frame bases, the maximum loading is in compression and is 12,493 lbs./ft² compressive. It is therefore seen that the maximum load is tensile in nature and acts on the forward end of each A-Frame base. The loads seen by the aft end of each A-Frame base are compressive in nature and will not be considered here assuming the deck is of sufficient rigidity to support the load. As the aft end of the A-Frame bases are sited over areas of the main deck very close to the transom and since they are sited near non-tight bulkheads that run from the main deck to the vessel's bottom shell plating, it will be assumed that this area of the vessel is adequate to meet the 12,493 lbs./ft² worst case deck loading. The transition from compressive loading to tensile loading is approximately 58" from the forward end of the A-Frame Bases. The load distribution shows a linear decline until the transition point is reached.

Table 1

M/V INDEPENDENCE

Calculation of Dynamic Accelerations for the Blue Gear Equipment Installation

SHIP'S PARTICULARS	
LOA	200 ft.
LBP	182 ft.
B	40 ft.
D	15 ft.
STABILITY DATA	
Draft	___ft.
GMt	4.85 ft.
LCG	14.62 Ft. AMS
TCG	0.00 Ft. Stbd
VCG	7.41 ft. ABL
Roll Constant	0.4196 S/ft 0.5

MOTION PARAMETERS--MIL-STD 1399						
	SEA STATE					
ITEM	4	5	6	7	8	units
Heave Accel	0.10	0.17	0.27	0.40	0.60	g's
Surge Accel	0.05	0.10	0.15	0.20	0.30	g's
Pitch Angle	2.00	3.00	4.00	6.00	10.00	deg.
Pitch Period	4.00	4.00	4.00	4.00	4.00	sec.
Roll Angle	7.00	12.00	16.00	28.00	42.00	deg.
Roll Period	7.62	7.62	7.62	7.62	7.62	sec.

DIMENSIONAL CLASSIFICATION OF SHIP		
ITEM	VALUE	AVAILABLE CHOICES
LBP Less Than	250 ft.	150, 250, 350, 500, 700, 1,000 ft.
Beam Less Than	50 ft.	50, 75, 105, 150 ft.

COORDINATES OF LOCATION TO BE ANALYZED					
Distance from MS	Feet		Distance from CG	ITEM	Feet
Longitudinal, Aft MS	112.00		Longitudinal	X	97.38
Transverse, Stbd of CL	0.00	Gives	Transverse	Y	0
Vertical, Above BL	30.00		Vertical	Z	22.59

PREDICTED LOCAL ACCELERATION VALUES--MIL-STD 1399					
	CALC. ACCELERATION, FT 2/S				
	Sea State				
Direction/Component	4	5	6	7	8
Longitudinal -- A x	4.97	8.48	12.14	18.27	32.29
Transverse -- A y	9.99	16.19	21.54	35.18	53.74
Vertical -- A z	43.75	50.2	57.6	70.17	93.38
	RESULTANT LOADING, G'S				
	Sea State				
Direction/Component	4	5	6	7	8
Longitudinal -- A x	0.154	0.263	0.377	0.567	1.003
Transverse -- A y	0.310	0.503	0.669	1.092	1.669
Vertical -- A z	1.359	1.559	1.789	2.179	2.900

c. **Dynamic Load Analysis**

As the M/V Independence is expected to deploy the Blue Gear Vehicle in Sea State 2 conditions or less and is then expected to conduct towing operations with the deployed Blue Gear Vehicle in seas up to and including Sea State 5, an appropriate multiplier will be used to account for the vessel's motion (i.e. gravitational acceleration). From Table 1 a "G force" multiplier of 1.659 will be used to adjust the calculated static forces to dynamic forces associated with operations in Sea State 5. The "G force" multiplier is the sum of both the vertical and heave accelerations (i.e. 1.559g + 0.10g). Figure 2 shows the Dynamic Load Distribution over each of the two (2) A-Frame Foundations. Accordingly, the maximum tensile loading on the forward end of the A-Frame bases is 8,655 lbs./ft² x 1.659g = 14,359 lbs./ft² tensile. On the aft end of the A-frame bases, the maximum loading is in compression and is 12,493 lbs./ft² x 1.659g = 20,756 lbs./ft². It is therefore seen that the maximum dynamic load is tensile in nature and acts on the forward end of each A-Frame base. The dynamic loads seen by aft end of each A-Frame Base are compressive in nature and will not be considered here, assuming the deck is sufficiently rigid to support the load. This was addressed previously in Section 6 (b) of this report. The transition from compressive loading to tensile loading is approximately 60" from the forward end of the A-Frame Bases. The load distribution shows a linear decline until the transition point is reached. Referring to figure 3, the worst case dynamic loading scenario will be the load due to the distributed load on the two points farthest forward. This becomes the maximum load applied and is calculated as shown.

$$F_{max\ load} = 14{,}359 \text{ lbs}/2 \text{ bolts} = 7{,}180 \text{ lbs.}$$

Applying this load to the bolts, the Stress can be calculated as shown below. Knowing that the Stress is proportional to the load and is inversely proportional to the area, the Stress of the bolts is calculated as shown.

$$S_{bolt} = F_{max\ load} / A_{stress\ contact\ area}$$
$$S_{bolt} = 7{,}180 \text{ lbs./ft} / A_{stress\ contact\ area}\ (\text{in}^2)$$

For a one (1) inch bolt (1: x 8UNC-2A) where the stress area is 0.606 in ^{2}, the stress applied to the bolt would be:

$$S_{bolt} = 7{,}180 \text{ lbs}/0.606 \text{ in}^2 = 4{,}351 \text{ lbs/in}^2$$

d. **Weld Stresses**

In order to insure the integrity of the deck insert system it is necessary to check the welds for the deck inserts. The welds will be subject to the forces

exerted on the 1:-8UNC Grade 8 attachment bolts that will be used to secure the Blue Gear A-Frame to the deck. Using the worst case dynamic load calculated above and applying it to the weld area of the deck inserts located at the forward-most point of the Blue Gear A-Frame base, a check can be made on the sufficiency of the design. Refer to Figure 4 which shows the plan and elevation views of the deck inserts to be checked. From this sketch the weld area is calculated to be:

$$A_{total} = A_{angles\ or\ flatbar} + A_{insert}$$

Where: $A_{angles\ or\ flatbar} = 3.5 \text{ in} \times 5/16 \text{ in.} \times 4 \text{ sides} = 4.375 \text{ in}^2$

$A_{insert} = \pi \times 1.5^2 \times .5 \text{ in.} = 3.53 \text{ in}^2$

Therefore: $A_{total} = 3.53 + 4.375 = 7.90 \text{ in}^2$

Applying the maximum applied load as the worst case scenario the calculated weld stress is as shown:

$$S_{weld} = F_{max\ load} / A_{total}$$
$$S_{weld} - 7{,}180 \text{ lbs}/7.90 \text{ in}^2$$
$$\text{Weld Stress} = 909 \text{ psi}$$

From conventional practice where the shear and normal stress forces are taken in combination the average stress is given as:

$$S_{avg} = 1.414 \times F/A$$
$$S_{avg} = 1.414 \times 7{,}180 \text{ lbs}/7.90 \text{ in}^2$$
$$S_{avg} = 1{,}285 \text{ psi}$$

e. **Conclusions for Analysis of the Blue Gear A-Frame Installation using the deck insert system design contained in drawing Nos. MAR-500 through MAR-503**

For the M/V Independence operating in Sea State 5 conditions for transit and towing operations with the Navy blue Gear A-Frame and Vehicle, the applied stress due to dynamic loading is well within the safety limits of the deck insert system design and the design materials. The stress of the proposed 1:-8UNC-2A, Grade 8, attachment bolt is on the order of 7,000 psi and would provide a safety factor of greater than 10. The weld stress of the inserts is on the order of 1300 psi and is significantly less than the yield limits for the weld filler metal and parent material which can range between 50,000 to 100,000 psi. This would provide a more than adequate margin of safety for the installation. The design and material selection of the proposed attachment system should be more than adequate for the M/V Independence operating in Sea State 5 conditions for the planned transit and towing operations.

7. FORCE AND MOMENT CALCULATIONS FOR THE BLUE GEAR HEAVE COMPENSATOR INSTALLATION

The Blue Gear Heave Compensator is used to control heave in the Blue Gear Vehicle Tow Cable, thereby reducing unwanted accelerations in the tow cable caused by vessel motion in the seaway during towing operations. The worst case scenario for this installation would be for towing operations in Sea State 5 conditions where the Heave Compensator would be utilized. Standard engineering techniques will be used to determine the forces acting on the deck insert bolts and the weld areas associated with the deck inserts.

a. Heave Compensator Force Calculations for the Deck Insert System

During towing operations a rotational moment will be applied to the Heave Compensator foundation. The bolts and deck inserts will resist this rotational moment with the moment applied offset from the Heave Compensator's foundation due to the unsymmetrical geometry of its arrangement. The Blue Gear project engineers have prepared two (2) detailed force diagrams of the forces applied to the Heave Compensator foundation in this worst case configuration which is shown in the attached diagram entitled "Heave Compensator Case 1 (Towing)" which includes the Static Force Distribution diagram. As can be seen from the Heave Compensator Static Force Diagram, only the deck insert bolts in the aft port corner area will be in tension with the rest of the Heave Compensator foundation being in compression.

b. Static Load Analysis

According to the Blue Gear Heave Compensator Case 1 (towing) Static Force Diagram, the maximum tensile loading on the port aft corner of the Heave Compensator frame is 136 lbs/ft^2 tensile. On the Starboard forward corner the maximum loading is in compression and is 506 lbs/ft^2 compression. The loads seen by the forward portion of the foundation are compressive in nature and will not be considered here assuming that the deck is of sufficient rigidity to support the load.

c. Dynamic Load Analysis

As was described earlier in Section 6©, the gravitational acceleration due to the M/V Independence's characteristic accelerations in a seaway will be used to adjust the calculated static forces to dynamic forces associated with operations in Sea State 5 conditions (See Table 1). The "G force" multiplier to be used is the same 1.659 g's. Therefore the maximum tensile loading on the worst case port aft corner of the Heave Compensator's foundation is 136 lbs/ft^2 x 1.659 = 226 lbs/ft^2. On the starboard forward corner the maximum loading is in compression and is 506 lbs/ft^2 x 1.659 g = 839 lbs/ft^2. It is therefore seen that the maximum dynamic load is tensile in nature and acts on

the aft port corner of the Heave Compensator foundation. The dynamic loads seen by the rest of the foundation are compressive in nature and will not be considered here, assuming the deck is sufficiently rigid to support the load. Referring to Drawing No. MAR-501, "Heave Compensator Support Angle", it can be seen that the maximum tensile loading will occur at the deck angle attachment bolt that mates to the deck insert in this area. This becomes the maximum load applied and is calculated as shown.

$$F_{max\ load} = 226\ lbs/ft^2$$

Applying this load to the bolt, the stress can be calculated as shown below. Knowing that the stress is proportional to the load and is inversely proportional to the area, the stress on this bolt is calculated as shown:

$$S_{bolt} = F_{max\ load} / A_{stress\ contact\ area}$$

$$S_{bolt} = 226\ lbs./A_{stress\ contact\ area}$$

For a one (1) inch bolt (1"-8UNC-2A) where the stress area is 0.606 in^2, the stress applied to the bolt would be:

$$S_{bolt} = 226\ lbs/0.606\ in^2 = 372\ lbs/in^2$$

As this stress value is only 9% of the load seen by the A-Frame bolts as previously analyzed in Section 6(e) of this report, no further analysis is required. The bolts and the deck inserts securing the Heave Compensator will only be lightly stressed.

d. **Conclusions for Analysis of the Blue Gear Heave Compensator Installation using the Deck Insert System Contained in Drawing Nos. MAR-500 and MAR-501**

For the M/V Independence operating in Sea State 5 conditions for transit and towing operations with the Navy Blue Gear Heave Compensator, the applied stress due to dynamic loading is well within the safety limits of the deck insert design and the design materials. The stress of the proposed 1:-8UNC-2A, Grade 8, attachment bolt is on the order of 372 psi which would provide a safety factor greater than 180. The weld stress of the inserts is significantly less than the yield limits for the weld filler metal and the parent material as it would be 9% less than the stresses seen on the A-Frame deck mounting inserts. This will provide a more than adequate margin of safety for the installation of this equipment operating in Sea State 5 conditions for transit and towing operations.

8. THE WINCH AND HPU DECK INSERT INSTALLATION COMMENTS/CONCLUSIONS

As both of these pieces of Blue Gear Equipment will not experience much in the way of loading as all towing loads will be taken up by the Heave Compensator, the deck insert system can be assumed to be more than adequate for the safe and proper restraint of these pieces of equipment during all operating conditions. It is to be noted that neither piece of equipment will be subject to any external forces other than the pitch and roll conditions characteristic to the M/V Independence operating in Sea States up to 5, therefore the forces exerted on the deck insert bolts will be considered insignificant.

MAR, Incorporated

Memo

To: Dave Clements,Tim Minniear

cc: Ron Erich

From: Wes Scott, P.E.

Date: February 15, 2008

Re: Torque Specifications for 1" – 8 UNC Grade 8 Deck Insert Bolts

---

Hello Dave, Tim and Ron,

Some time ago I was asked to look into what would be a good torque specification for use for the 1" – 8 UNC Grade 8 Deck Insert Bolts that are used to secure a variety of deck equipment that is secured to the afterdeck of the M/V Independence. Upon my investigation into this issue I consulted a variety of my engineering library references pertaining to steel construction, strength of materials and failure analysis. I was able to find a reference that dealt with suggested pre-loading of bolting hardware which was useful in coming to a reasonable answer to the question. I applied the equations and arrived at a number on which I then did a sanity check based on what I have experienced with similar pre-loaded grade 8 bolt scenarios found in the specifications for grade 8 bolts used to secure cylinder heads in internal combustion engines. What I found for a torque value was close to the same answer for both approaches, which then gave me a reason to have confidence in the torques values calculated from the engineering references.

I was also asked to consider whether the torque for each of the deck socket bolts should be adjusted to account for the variance in the stress distribution over each piece of deck equipment. First, let me address this issue before getting to the calculated torque values for the deck insert bolts. ***ANSWER: As each piece of deck equipment is usually designed to be integrated into a structural steel framework built of steel shapes intended to distribute the loading of the equipment into a common base, the loading on this base, if bolted or welded down to the ship's deck should sufficiently stiffen the structure to accommodate most loading conditions. We will therefore assume that the equipment's base will see a uniformly distributed load over all of the bolts used to secure it to the deck, assuming that there is a somewhat uniform spacing of bolts around the entire perimeter of the base footprint. Therefore all of the bolts should receive the same torque and preload during placement and securing operations.***

The following calculations were used to determine what would be the recommended standard torque value to be used wherever deck equipment is to be placed and secured on the deck of the M/V Independence utilizing the existing 1" – 8 UNC deck inserts:

Assumptions:

1. All deck equipment will be sufficiently framed to accommodate the intended loading.

2. All deck equipment will have an adequate number of bolting holes around the mounting base.

3. All bolts used to secure deck equipment will be 1" – 8 UNC Grade 8 steel bolts, preferably plated for corrosion protection. Unplated bolts shall not be reused once they become corroded or if their threads become damaged or deformed.

4. All deck insert threads shall be clean and free from corrosion and debris prior to usage.

5. All bolts threads shall be protected prior to installation with "Never Seize" compound.

6. All bolts shall be tightened, with a calibrated torque wrench, to obtain a standard pre-load of 10% of the minimum tensile load capacity of the bolts used. For 1" – 8 UNC Grade 8 bolts the minimum tensile load capacity is listed to be 91,428 #. Therefore the torque applied to each bolt upon installation shall be sufficient to permit each bolt to see a tensile load of 10% of 91,428 # = **9,143 #.**

CALCULATION OF THE TORQUE REQUIRED TO ATTAIN A TENSILE LOADING OF 9,143#

The equation that it to used to find this torque value is:

$$M_t = (W_i\ d)/5$$

Where M_t = The Torque Value (in Foot-pounds)

W_i = The initial bolt tensile loading in pounds

d = The nominal bolt diameter (in feet)

This yields the following:

$$M_t = (9{,}143 \text{ pounds})(1 \text{ inch})(1 \text{ foot}/12 \text{ inches})/5$$

M_t = **152 foot-pounds** = Torque value to be applied to each bolt

CALCULATION OF THE TORQUE REQUIRED BASED ON SIMILAR TYPES OF BOLTING APPLICATIONS USED ON INTERNAL COMBUSION ENGINES FOR CYLINDER HEADBOLT TORQUE SPECIFICATIONS

For a 3/8" diameter UNC Grade 8 head bolt used to secure an engine cylinder head the recommended torque specification is 25 foot-pounds. Using this as a reference value and sizing up for a 1" – 8 UNC Grade 8 bolt the stress area would increase from .078 sq. inches for the 3/8" bolt to .606 sq. inches for a 1" bolt.

By developing a relationship between these two bolts we can find the corresponding torque value for the large 1" bolt by the following equation:

$$\frac{25 \text{ ft-lbs}}{.078 \text{ sq. in}} = \frac{X \text{ ft-lbs}}{.606 \text{ sq. in}}$$

Therefore: $X = 194$ **ft-lbs**

Conclusion:

It is apparent that the 152 ft. lb torque setting is in the neighborhood of what can be seen for torques used for similar applications so I hereby recommend adopting a standard torque setting for all of the deck insert bolts to be **150 ft. lb**. This number is conservative and should not be difficult to achieve during project equipment loading events. It is to be noted that it would be preferred that new bolting hardware is used for each deployment unless there is no corrosion on the bolts used more than once.

I trust that this will be helpful. Please call me if you have any questions.

Cheers,

Wes

[This page intentionally left blank]

A-Frame Alignment Report

Authors: Gerrett Snediker
Doug Davis

Date: October 2, 2006

Executive Summary

Problem

During the latest deep water training session as well as the session prior to the 2005 FTHE refurbishment, a loud banging noise occurred during the A-Frame luffing sequence. The 2005 DWT session saw the banging return midway through the training. The magnitude of the noise reduced and in most cases eliminated by operating the A-frame luffing control at a drastically reduced speed near the point of being fully luffed out. The concern is that the condition of the hardware is changing (banging was gone but returned) and that stresses are being applied to parts of the A-Frame during the banging which over time, could result in damage to the equipment.

Root Cause

The cause of the banging was determined to be an increased bushing clearance resulting from a combination of normal wear, out of alignment loading wear, and a build-up of tolerances. The addition of fabrication misalignment, and incorrect mounting dimensions created a preloading condition as soon as the A-Frame was installed on the platforms deck. In a fully luffed out position, the feet if suspended in space would sit at a .487 degree angle to each other. Since the feet are forced into a 0 degree angle when sitting on the deck, this angle is translated up to the bushings and pins. Uneven landing in the luffed out position also loads the system. The bushing wear was most prevalent in the foot bushings. These are the most heavily loaded.

Solution

The solution includes keeping the pins stationary with the feet so the rotation is at the leg bushings, install the deck plates to the manufacturers drawing and to correct some alignment by installing a series of qty 48 4” shims of different thicknesses to go under each mounting hole. The shims will eliminate the .487 degree angle that the feet make to each other, thus eliminating this preloading. Misalignment will still exist in the system but will be reduced, decreasing wear and extending the operational life expectancy of the bushings. In addition, a spanner support beam needs to be installed between the legs to ease installation. This is to keep the feet from being pulled inward by gravity when hanging from a crane. Lastly, to help prevent bronze transfer at the pin/bushing interface, resurface the pins to improve surface finish and remove the transferred bronze (already done) and both pins can be Teflon coated.

Implications and Recommendations

In order to successfully determine the shim thicknesses, metrology data of the installed deck plates as well as additional foot metrology data will need to be taken. The deck plates should be installed to create a mounting configuration as seen in the manufacturers' installation drawing. The computer model of the A-frame measurements showed what was observed in the field. The analysis also concluded that the A-frame legs bowed inward 1" during the 2005 installation further exacerbating the alignment issue. Successfully implementing the recommendations offered should significantly reduce the undesired forces and torque seen on the pin/bushing interface and the preloading condition that inherently exists in the installed system.

Table of Contents

Executive Summary ii
Problem ii
Root Cause ii
Solution ii
Implications and Recommendations iii
Table of Contents iv
List of Figures v
List of Tables v
Statement of Problem and Assumptions 1
Statement of Problem 1
Assumptions 1
Results and Recommendations 3
Results 3
A-Frame Natural Orientation 3
Understanding the Data 4
Recommendations 7
Analysis 8
Data Capture 8
Understanding the A-Frame Orientation 10
Creating Useable Models 12
Creating the A-Frame Cylinders 13
Creating the Foot Cylinders 14
Assembling the Model 15
Possible Solutions 16
Mitigating the Cylinder Theory 19
Table of Shims and Locations 19
Deck Plate Placement 19
Spanner Beam for Transport 21
Discussion 21
Appendix A 22
Results Using a Single Best Fit Axis Through Both Bores 22
Appendix B: Table of Vector Values 23

List of Figures

1. Vector Plot for Luffed Out Model
2. Vector Plot for Straight Up Model
3. Tracker II
4. A-Frame Raw Data
5. A-Frame Loading Forces During Installation
6. A-Frame Measured Orientation
7. Geometry of the A-Frame
8. Picture of the Feet as Measured
9. Port Side Assembly Key
10. Manufactures Foot Mounting Drawing
11. Drawing of Feet Placement During DWT 2005
12. Vector Plot for Luffed Out Model

List of Tables

1. Free State Angles of the A-Frame Feet to the Deck Surface and the Boat Centerline
2. A-Frame Arm Bushing Bore Angle from Ideal
3. Foot Bore Angle to Deck Mounting
4. Tracker II Specifications
5. Breakdown of Points in Tolerence on the Starboard Foot
6. Breakdown of Points in Tolerence on the Port Foot
7. Decision Matrix
8. Foot Mounting Dimensions

Statement of Problem and Assumptions

During the deep water training session prior to the 2005 FTHE refurbishment, a loud banging noise occurred during the A-Frame luffing sequence. The noise returned during the third week of the 2005 DWT session. The noise was reduced and in most cases eliminated by operating the A-frame luffing control at a drastically reduced speed near the point of being fully luffed out. The concern is that the condition of the hardware is changing (banging was gone but returned) and that stresses are being applied to parts of the A-Frame during the banging which over time, could result in damage to the equipment.

Statement of Problem

The issue being addressed by this study is the banging noise heard during the luffing sequence on the DWT sessions. Upon further investigation, it was determined that the noise was generated from the area where the starboard A-frame leg mounts to the starboard foot. It appeared that as the A-frame began to luff-in from the overboard position, the bang occurred just before or as the starboard arm left the landing pad.

After disassembly of the A-frame and removal of the bushings, some gauling, bronze transfer and bushing wear was evident on the starboard side. The port side bushings also showed some sign of wear but not to the extent seen on the starboard side. Since the pins are a hardened steel and the bushings made of bronze, no scoring on the pins was found.

The noises heard during DWT operations have been attributed to pin movement across the larger gap on the starboard side when the load on the stop is reduced enough for the contacting surfaces to break free and slide. The goal of this study is to understand how the wearing of the bushings occurred in the first place, and how to prevent it from happening in the future.

Assumptions

1. Wearing of the bushings caused room for the pin to move laterally as opposed to a desired strictly rotational motion.
2. Weather and temperature change throughout the day can and do play a role in the metrology data taken. Temperature changes affect the steel and moisture in the air will slightly alter the laser trajectory. The only way to avoid this error is to perform

measurements in a climate controlled environment. This error is assumed to be small.

3. We must assume that the orientation of the A-Frame while laying on dunnage is lying in its natural state without being torqued or bent under its own weight. The dunnage was stacked symmetrically to help alleviate this concern.
4. We assume that when the A-Frame does get put into place, it will be worked back into the measured orientation even though the pick point locations are causing the legs to bend inward.
5. Assume that the Deck plates will be flat and lie on the same plane
6. Assume that the foot bottom plate (2” steel plate that has the mounting holes for mounting to the deck plates) is of a uniform thickness with the top and bottom of the plate parallel to each other.

Results and Recommendations

This section describes the way in which the system is out of alignment and offers recommendations on how to alleviate the situation. The analysis showed that the measurements taken and models built are consistent with what was observed in the field.

Results

These results build off the analysis explained in later sections. The goal of the results was to essentially understand how the system was out of alignment and to what degree. Comparisons were made against field observations and a model indicating how the feet need to move to reach a stress free state was developed.

Two sets of models were generated to understand the impact of how to model a centerline through the bores. One set, created a single centerline through both of the A-frame bores (as in a line bored assembly), and then attached the feet. The other model used two separate axes (1 for each bore) and the feet were attached to the corresponding axes. The data showed that the differences in both models were small. The results herein are of the models with the dual best fit axes.

A-Frame Natural Orientation

Due to the way the assembly had to be built; misalignment can be seen easiest through the feet. The feet were constrained to the A-frame in a way that left the foot top planes at angles to each other. Metrology data points of the feet bottoms couldn't be taken and therefore, the assumption that the top planes of the feet are flat and parallel to the bottom planes of the feet was made.

Figure 1 below shows how the A frame feet are skewed from an established deck mounting hole plane in the luffed out position. This model is achieved because the bottoms of the feet aren't constrained. The only constraint on rotation is the landing pads that meet when the system is luffed out. Looking at Figure 1, there are arrows coming from the mounting holes. These arrows are vectors derived from a series of 8 points per mounting hole that were taken on the bottom plate surface of the feet at the circumference of the holes. With 24 mounting holes per foot, we have a series of 377 vectors (some holes only contained 7 points).

The large green plane labeled "mounting hole plane" was created out of the entire 377 mounting hole points that lay on the foot bottom plate. The vectors are the result of the relationship between the 377 individual points and the "mounting hole plane". The arrows point in the direction that the point needs to move in order to mate with the mounting hole plane. Therefore, vectors pointing up indicate that those points lie below the best fit mounting hole plane

and the length of the vector corresponds to the distance that point needs to travel to fall on the best fit plane.

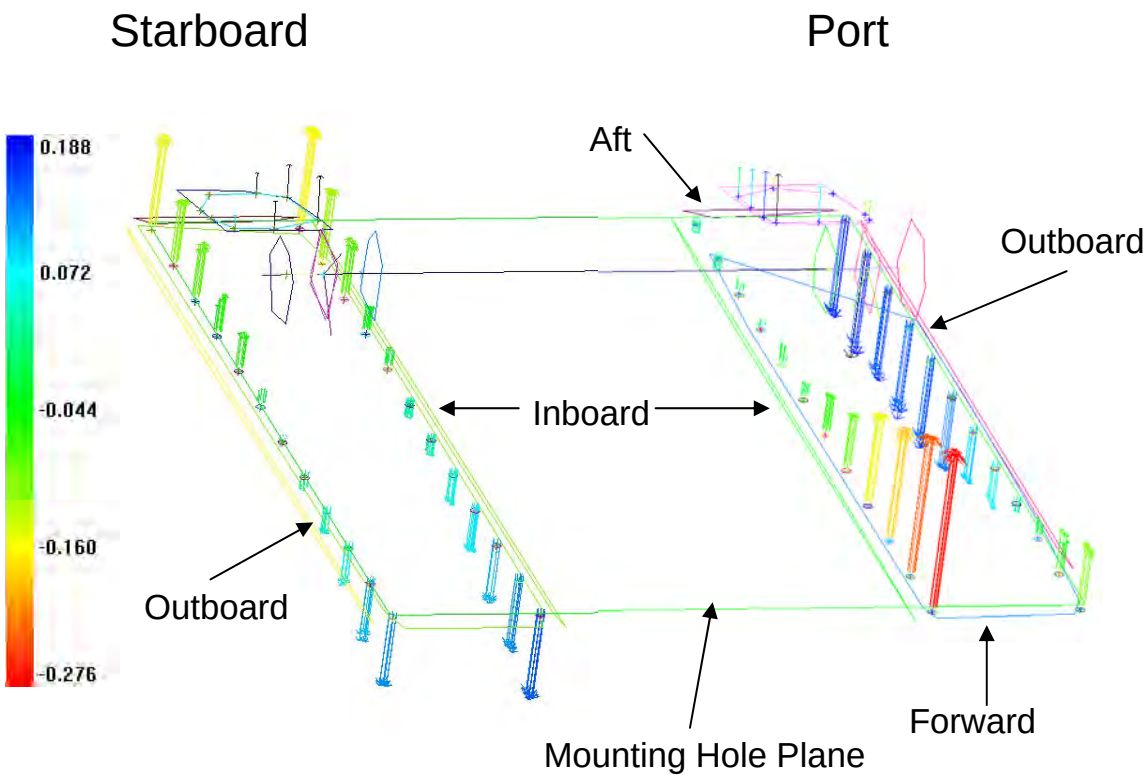

Figure 1: Vector Plot for Luffed Out Model

Understanding the Data

Using Figure 1 and assuming that the mounting hole plane is the deck, the “Port Forward Inboard” mounting hole would be buried .276 inches into the deck. The “Port Aft Outboard” most points would be raised off of the deck level by .188 inches. The “Starboard Aft” inboard and outboard point groups are both sitting approximately .15 inches into the deck while the “Starboard Forward” side is raised off the deck approximately the same magnitude.

In reality, the feet are not buried into the deck, nor are any part of them protruding up. The equipment sees pre-loading when the feet are bolted down. In order to mount these feet to the deck, the starboard aft needs to go up approximately 0.15 inches and the Port Aft needs to go down approximately 0.15 inches. When this happens, the starboard foot landing pad is now approximately .3 inches higher than the port side. During DWT 2005, the crew noticed that when luffing out, the starboard pads touched prior to the port by about 0.75 inches. The analysis shows same trend to what was observed in the field, but about half the magnitude. The difference could be due to A-Frame unbalance deflection or bushing clearance.

Because the A-frame bores aren't perfectly aligned to each other, it becomes important to see what happens to the vectors as the A-frame rotates. Figure 2 below was created the same way as Figure 1 above, but luffed in the full 67 degrees. When comparing the two A-frame positions, it is apparent that the results are very similar. The main difference is that the Port foot forward side gets a little more balanced and isn't rolling (less yaw) as much as before (0.1 inches vs. 0.2 inches in figure 1), while the starboard aft is less balanced (0.05 inches vs. 0.01 inches in figure 1). This difference can be attributed to the A frame alignment.

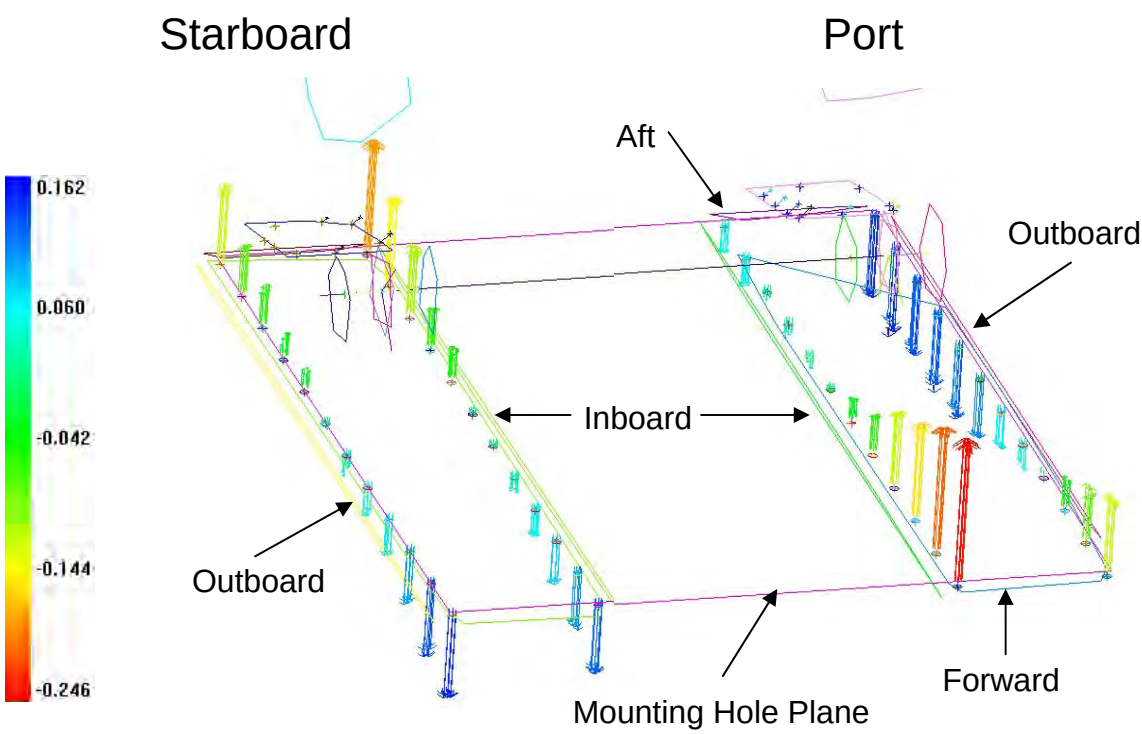

Figure 2: Vector Plot for Luffed-in Model

Specifics on the alignments are given in the following tables. Angles are given to the deck or mounting hole plane and to the boat centerline which is perpendicular to a common bore axis that goes through the center of the two A-Frame bores as would be the result of line boring the A-Frame.

A-Frame Assembly

The A-Frame assembly with feet attached have the following alignments.

		Overboard Position (degrees)	Inboard Position (degrees)
PORT	Foot Base to Deck Angle	.465	.344
	Foot to Boat Centerline Angle	.216	.021
STARBOARD	Foot Base to Deck Angle	.122	.144
	Foot to Boat Centerline Angle	.436	.159

TABLE 1 Free State Angles of the A-Frame Feet to the Deck Surface and the Boat Centerline

A-Frame Structure

The only A-Frame alignment that is required for smooth system operation is the alignment of the two bearing bores. If these are not pointing at each other then the bushing clearance or frame deflection must take-up the out-of-alignment. The angles that the two A-Frame bores make to a common best fit bore are shown in Table 2. The A-Frame has been designed with a stiff box shape with central mounting plates for holding the bushing bore. The central plate gives the bushing bores lower torsional and bending stiffness to better accommodate out of alignments.

	Bore Angle (degrees)
PORT ARM	.188
STARBOARD ARM	.312

TABLE 2 A-Frame Arm Bushing Bore Angle from Ideal

Deck Mounting Feet

Foot alignment consists of the angle of the bore to the deck and the perpendicular orientation of the bore to the deck bolt pattern. These measured angles are shown in Table 3.

		Angle (degrees)
PORT	Bore Angle to Deck	.134
	Bore Angle to Deck Bolt Pattern	.136
STARBOARD	Bore Angle to Deck	.067
	Bore Angle to Deck Bolt Pattern	.077

TABLE 3 Foot Bore Angle to Deck Mounting

Recommendations

The difference between Figure 1 and Figure 2 is a result of the two bore axes not being aligned with one another. The bulk of the undesired aligment dimensions as shown by the vector diagram is formed prior to rotating the A-frame and is inherently built into the system from every weld and machining tolerance. Because it is now known how the system is preloaded on a flat surface, that loading can be mitigated, and when the A-frame luffs out both pads will touch at the same time. There will still be unwanted forces while luffing, but those will be reduced when compared to current levels. Line boring or fabricating axis correcting bushings would eliminate the luffing loads but with shimming and correct initial deck placement of the feet, the effect of the luffing loading will be acceptable.

The recommendation of the team is to develop a series of 4” OD (minimum) shim plates that will take out the pre-force inherent in the system at installation. To properly design the shim plates, measurements of the underside of the feet will be taken to verify that the foot bottom plates are uniform and the top/bottom surfaces are parallel within a certain tolerance. Another set of data points will be made of the deck plates after they are installed. Combining the deck plate model, the current analysis, and a model of the bottom of the feet, a table of shim plates will be created. Every mounting bolt hole will have a custom thickness shim plate to compensate for the vector found in the analysis. The end result will be shims that fit between the feet and deck in a way that will minimize misalignment.

Along with the shims, a spanner support beam will be installed during A-frame installation and dismantling to keep the feet from being pulled inward by gravity. Lastly, to help prevent bronze transfer at the pin/bushing interface, both pins can be Teflon coated. These three recommendations can easily be completed prior to the 2007 DWT operation.

Analysis

Due to the way that the bushings wore, and how the banging seemed to occur around the same point during the luffing sequence, two potential issues were explored. The first hypothesis for the cause of the problem assumed that instead of a single axis running through both bores, the bores were off angle and therefore creating two competing axes of rotation. These competing axes would then cause binding at the bushings leading to the problem experienced. The second theory supposed that either the cylinders weren't getting pressurized at the same rate due to hose length issues, or the starboard leg was sticking at full extension.

Data Capture

To get a true representation of how the equipment lines up, the team contracted API sensors (Automated Precision, Inc) to come in and take metrology measurements of the A-frame and feet. API sent a field agent to the west coast facility where the equipment had been laying sideways on dunnage for the last 6 months. The tool used to analyze the A-frame was API's Laser Tracker 2. See 4 below for equipment specifications and Figure 3 below for a picture of the equipment used.

Laser Tracker IIPLUS!
Maximum lateral target speed > 3.0 meters/sec (120"/sec)
Maximum acceleration in all directions > 2 g
Range of Measurements
Horizontal: ± 300° (600° end-to-end)
Vertical: + 80° - 60°
Distance: greater than 40 meters
Angle Resolution 0.14 arc second
Interferometer Mode
Distance Resolution ± 1µm
Repeatability ± 2.5 ppm (2 sigma)
Absolute Accuracy in 3D Spatial Measurement
Static: ± 5 ppm (2 sigma) 0.001" (25µm) at 16 feet (5 meters)
Dynamic: ± 10 ppm (2 sigma) 0.002" (50µm) at 16 feet (5 meters)

Table 4: Tracker II Specifications

Figure 3: Tracker II

The tracker system utilized has a laser and track ball that records any point in space as long as line of sight is possible. A series of 6 markers were glued to the asphalt as calibration points. The operator recalibrated the machine after each major surface was analyzed to mitigate as much error as possible. A track ball was moved all over the A-frame and feet taking a measurement whenever it remained still for 1 second.

Hundreds of points were taken during two days of measurements. Priority was given to the bores and roughly 180 data points were taken on each A-frame bore, over a dozen taken circumferentially every axial inch down the 12 inch long bores. Figure 4 below shows what the data looked like in it's raw form after measurements were taken.

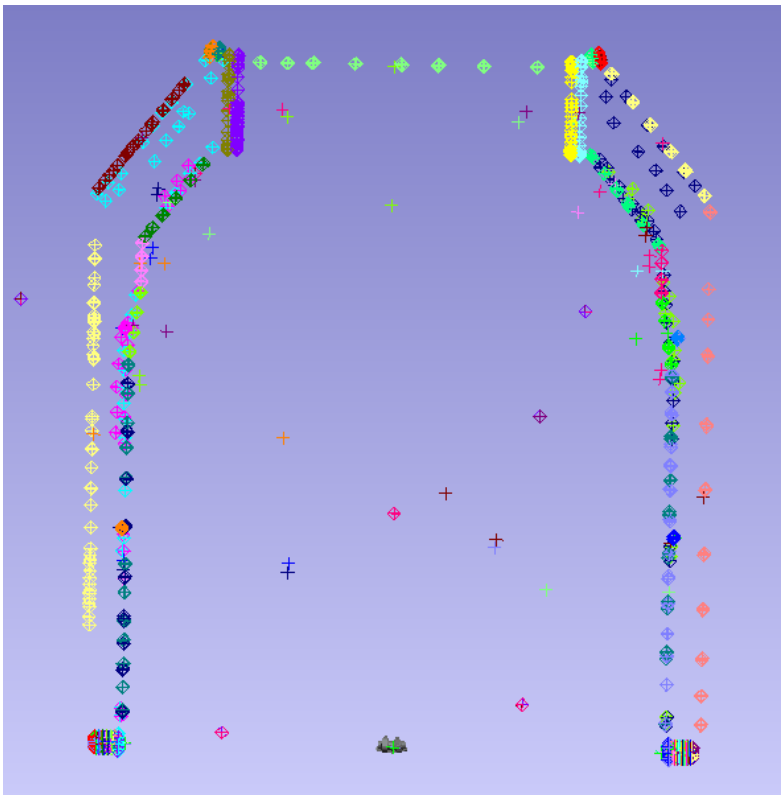

Figure 4: A-Frame Raw Data

Understanding the A-Frame Orientation

One thing the team wanted to better understand was how much the system flexes. Namely, it is important to determine if the current orientation was in fact where the A-Frame naturally wanted to be or if it was laid down in a way that is causing it to flex. This issue is important to explore because when the A-Frame is picked up to be brought on the ship, the pick points are inboard of both legs, just on the leg side of the leg/cursor mating plane. This means that gravity is pulling the legs inward as it is lifted up and onto the ship. With the Feet Attached to the Legs while lifting, this only aggravates the situation causing the legs to bow inward even further (see Figure 5 below). During past installations, it was recorded that the feet were mounted to the ship deck a full 1 inch inward of where the drawings had said they should be. This was because it was not possible to land the A-Frame on the deck and spread the feet to the correct distance.

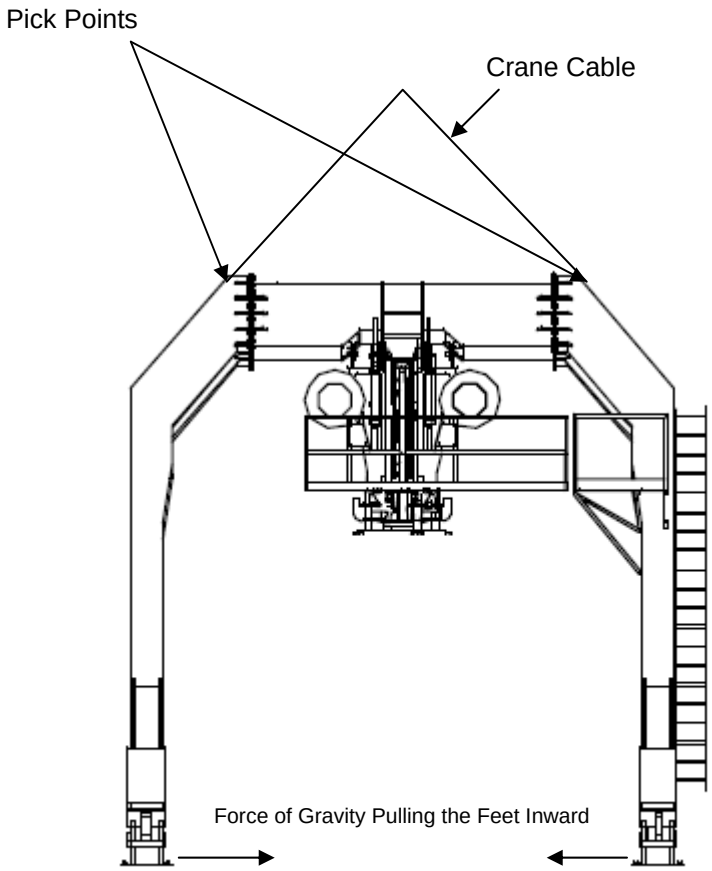

Figure 5: A-Frame Loading Forces During Installation

On the second day of testing, the team used a fork lift to raise the port leg slightly in an effort to allow it to move if it were indeed lying in an unnatural position. The forklift used was not powerful enough to lift the leg clear off the dunnage, but it appeared that the port leg did slightly rise above the one pile of dunnage near where the foot installs. This movement in the least provided a second set of data points the team used to ping against the first. This second set provided a reality check to see how even a slight movement in the A-frame can manipulate the axes running through the bores. Figure 6 below shows the orientation of the A-Frame as it was measured.

Figure 6: A-Frame Measured Orientation

Creating Useable Models

After all of the desired data was taken, the team needed to put this data in a form that would be useable for analysis. Utilizing a modeling tool called Spatial Analyzer, all of the points were used to create the geometry of the A-Frame and feet. A series of labeled Planes, Circles, Cylinders, and Center lines were created and replaced the raw data points. Figure 7 below is what the data looked like after converting it to geometry from points.

Spatial Analyzer creates a “best fit” geometry based on statistical analysis of where points are in relation to the created geometry. For example, when creating a plane, a series of points are selected and a best fit plane is to be created based on those points. Spatial Analyzer requires that a tolerance be placed to keep points out of the formation of that plane if they fall a specified distance away from the created plane. This allows erroneous points, such as those taken in a pitted surface or on top of a dirty surface to be automatically deleted from the geometry.

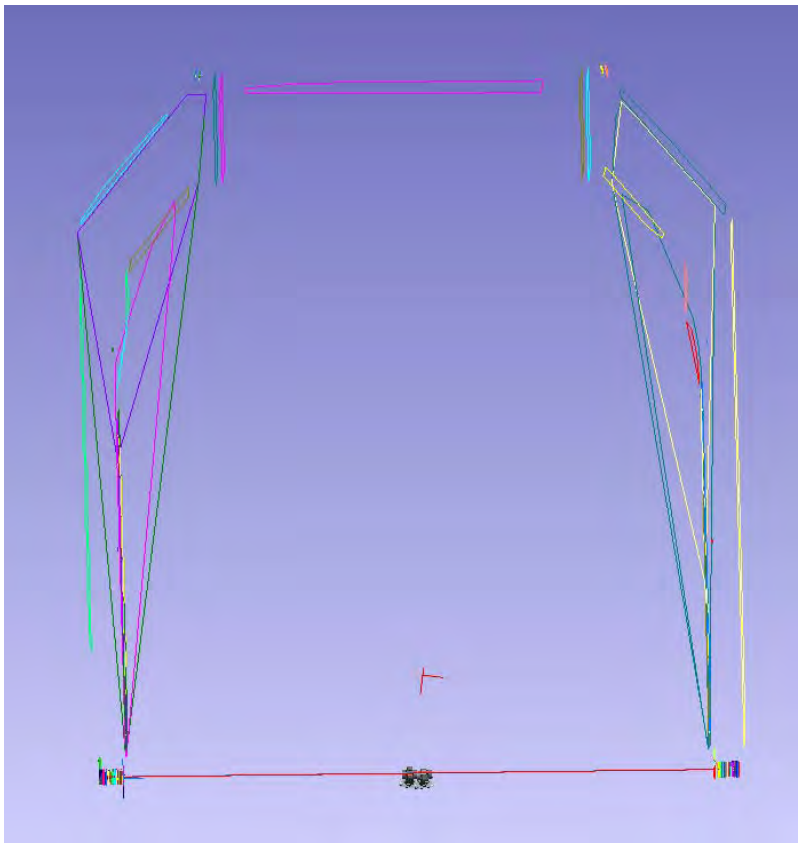

Figure 7: Geometry of the A-Frame

Creating the A-Frame Cylinders

As mentioned, the bores represented by cylinders are the most critical part of the a frame model. Within an ideal system they should be aligned such that a single line would pass through the axis of both cylinders. To build the truest representation of the cylinders, the team decided to keep a tolerance of under .03 inches and eliminate about %10 of the points. This tolerance was chosen as the bores saw a variety of conditions such as pitted, primed, painted, and bare metal. The operator tried to minimize the amount of surface finish error by taking points on the most consistent type of surface, but this was not always possible.

The starboard bore contained a series of 194 points; 182 used points and12 out of tolerance. The tolerance used for this cylinder was .02 inches. The Port bore contained a series of 169 points; 153 used points and16 out of tolerance. The tolerance used for the port cylinder was .025 inches. A higher tolerance was used for the port because some of the points between the .02 and .025 range didn't look erroneous when compared to the points next to them and our goal was to capture as accurate a picture as possible

Creating the Foot Cylinders

Unlike the A-Frame, the feet were measured while lying on their bottoms, as they would be when mounted onto the platform (See Figure 8 below). Because the A-Frame legs sit in between the two ears on each foot, a cylinder for each foot was created that spanned both ears. Measurements were taken of both the inboard and outboard side of each ear on both feet. Figure 8 below shows the bushings still installed in the feet, but all bushings were removed prior to taking measurements.

Figure 8: Picture of the Feet as Measured

The Starboard foot bore contained a series of 49 points; 49 used points and 0 out of tolerance. The tolerance used for this cylinder was .025 inches. As seen in Table 5 below there is an even distribution of points within the .025 inch tolerance of the created cylinder.

Number of points within 0.00 to 0.001	4
Number of points within 0.001 to 0.005	15
Number of points within 0.005 to 0.01	16
Number of points within 0.01 to 0.025	14

Table 5: Breakdown of Points in Tolerence on the Starboard Foot

The Port foot bore contained a series of 40 points; 39 used points and 1 out of tolerance. The tolerance used for this cylinder was .035 inches. A higher tolerance was used than on the

starboard side because some of the points between the .02 and .035 range didn't look erroneous when compared to the points next to them and the goal was to capture as accurate a picture as possible. As seen in Table 6 below there seems to be a greater concentration of points within the .005 to .035 tolerance of the created cylinder.

Number of points within 0.00 to 0.001	2
Number of points within 0.001 to 0.005	5
Number of points within 0.005 to 0.01	15
Number of points within 0.01 to 0.035	17

Table 6: Breakdown of Points in Tolerence on the Port Foot

Assembling the Model

After the geometry was made of the data points, the three files (2 feet and the A frame) had to be assembled. Figure 9 below depicts the pertinent planes and cylinders in the description of the assembly. The team was limited in the way the geometry could be constrained because all of the parts were plotted separately. Future measurements of the assembled A-frame could be checked against what was found during this series of analysis.

Firstly, the port foot and port A-frame cylinders were aligned to each other as were the cylinders on the starboard side. Due to the lack of bushings, the A-frame bore faces would not line up with the faces on the feet. To fix this problem a plane bisecting the smaller A-Frame bore and another bisecting the larger foot bore were created. These planes were then mated as shown in the figure below constricting movement along the X-axis. The last constraint needed was rotation. The landing pad of the port foot was mated to the landing pad of the A-frame as was with the starboard side. This orientation depicts the A-Frame fully luffed out.

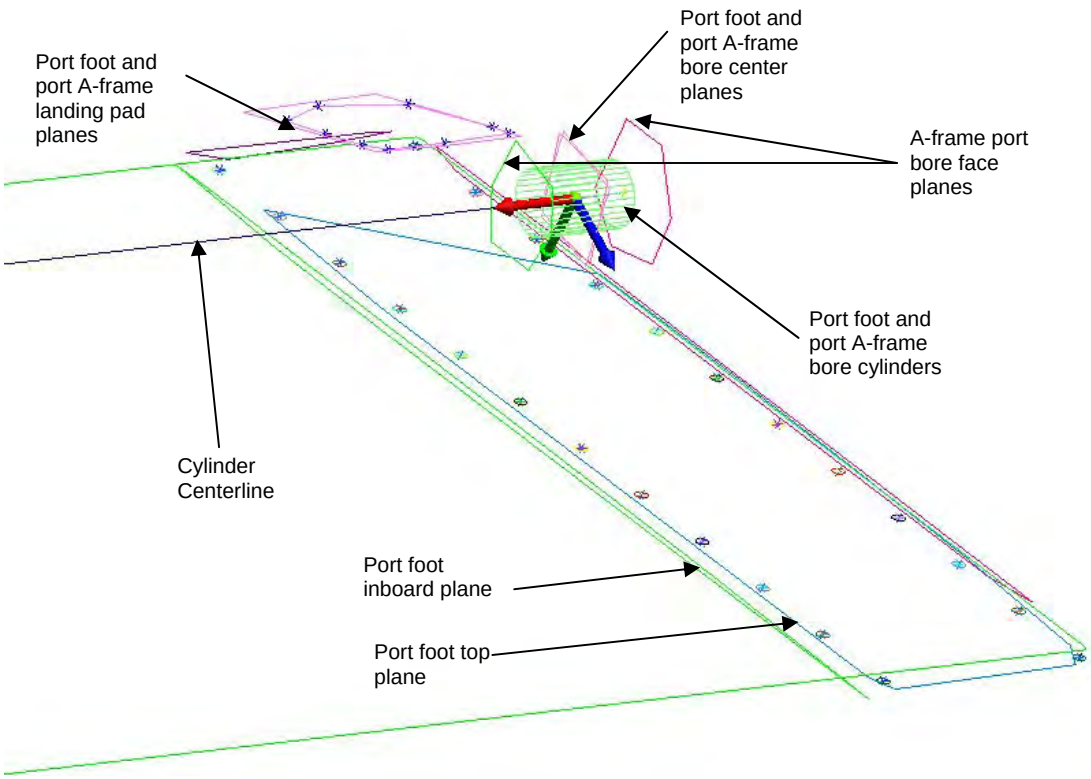

Figure 9: Port Side Assembly Key

Possible Solutions

The results show that it is not necessarily the 67 degrees of rotation that caused the wearing of the bores. It was the fact that there were twisting forces skewing the axis prior to any rotation that started the problems. With all of the preloading forces, when the A-frame luffed, forces between the pins and bushings were concentrated in certain areas. These concentrations caused the hard pins to shear material off of the relatively soft bushings. Without proper lubrication, shearing is possible without force concentrations, and even with lubrication, the preloaded forces were greater than the force required to shear the brass bushings.

This study has exposed three feasible ways of eliminating the bushings being worn away. The first way is to eliminate the preloading. If the A-frame can be mounted into a position that doesn't require it to be flexing from the start, much of the undesired forces will be eliminated. The second way is to let the system sit as it desires and then modify the bores, so that rotation can occur as desired without extra forces thus minimizing a shearing possibility. The third way to keep the system from shearing bushings is to use different materials that will resist shearing at high loads.

Given the different methodologies of achieving success, the team has identified 4 alternatives that broadly cover those methodologies to explore as potential solutions. To create a perfectly straight axis, the team has looked at line boring or producing custom bushings. To eliminate preloading due to the geometry that exists, a way of shimming the feet will be explored to take out all preloading. Lastly, to help prevent brass shearing off onto the steel pin, the team will explore Teflon coating the pins.

As these four alternatives are explored, a decision matrix (See 7 below) has been constructed to identify the best alternative. The 5 weighted categories considered are cost, time required to implement, reliability/life of the bushings, and probability of success (overcoming issues preventing desired implementation). End reliability of the assembly was weighted the highest at 50% of the total score because the reliability of the joint is the ultimate objective. Probability of success and cost were the next highest weighted at 20% of the score due to the budget limitations of the program. Time was last at 10%. Time required is somewhat important but DWT 2007 is 9 months away, so time isn't a real crunch. Due to the uncertainty that the system as measured was truly at a stress free state, doing something permanent to the system and realizing it was a mistake could be worse than doing nothing at all.

Line boring would be implemented on both the feet and the A-Frame, and a shim plate would need to be added to the port landing pad to make both legs reach the fully deployed position at the same time. The feet would be line bored to the drawing dimensions with greater precision, perpendicularity to the bolt hole pattern and parallel to the mounting surface. The A-Frame should be line bored as one assembly. Due to it's size, the A-Frame may require that the two legs be bored independently. This will require additional measurements and orientation keying for the docking head interface flanges to ensure the A-Frame can be set-up properly on the boring machine and reassembled into a correctly aligned A-frame. This keying could be beneficial if the A-Frame must be taken apart and reassembled for any reason. The cost of measuring, shipping, flange machining, in addition to machining the bores makes it a very costly operation therefore receiving a low score for cost. This time taken would be significant due to the shipping, rigging, and labor involved in creating a precision end product. The process is difficult and while it's not an easy fix, is a technically viable solution. This process is permanent and could not be undone. The end result will produce an aligned product that will have the best possible expected reliability.

Custom bushings could be created that would take the error out of each individual component of the A-Frame system and generate one consistent axis of rotation. The manufacture of bushings is relatively inexpensive, but precision CNC technology would need to be used to make 8 individual bushings with bores at slightly modified angles and positions. This method will require models be made of the measured equipment and the models transmitted to the machine shop for fabrication. Creating models that a CNC machine could use with the right

angles must be closely scrutinized. Since the only thing modified are the bushings, if this solution proves fruitless, bushings made to the original spec could be utilized bringing the system back to its original condition. This option relies on the fabrication of geometry from models that have to be correct. Finish boring on a lathe may be required after CNC to achieve a good finish. Also, every bushing would need to be installed in the correct orientation with anti-rotation features added to prevent rotation. The end result will be the same as line boring.

The bushings are meant to be sacrificial to a certain degree because they are easily replaced as opposed to blowing cylinders or ruining the bores. In order to save the bushings, the option of Teflon coating the pins has been identified. Teflon coating steel is feasible, and not very costly. Certain facilities have this capability and turn around time isn't expected to be significant. The concept has been around for some time and relatively simple and straight forward. Only the pins are affected by doing this and if it is deemed undesirable in the future the pins can be remachined, taking only a few thousandths off the surface. The main problem is that coatings do wear off. The chance that this measure alone would lower the coefficient of friction so much that the misalignment wouldn't matter makes the reliability better than the current configuration but not a permanent solution. It is however an excellent option to incorporate with one of the other options to reduce the risk of bronze transfer to the pin caused by insufficient lubrication from the wiping action of the motion.

Lastly, shimming the feet has been identified as a way to take the pre-stresses out of the system. This could be accomplished by making individual shims around each bolt with varying thicknesses. The main cost is machining the shims which would not be costly. This could be achieved with a relatively quick turn around time due to the fact that the vectors from Figure 1 have already been identified and making the solution evident just requiring a drawing. Shims could also take out any deflections in the ship installation of the deck plates. This solution wouldn't have to be permanent in any way and could easily be modified in the future. With the numerical data in hand, the probability for success is pretty good that pre-stressing could be significantly reduced and the alignment error seen during luffing can be equalized to minimize the maximum seen in either direction.

	Cost	Time Required	Reliability of the Bushings	Probability of Success	Total Score
Weight	0.2	0.1	0.5	0.2	1
Line Boring	1	5	10	5	6.7
Custom Bushings	5	1	10	5	7.1
Teflon Coated Pins	10	10	1	10	5.5
Shimmed Feet	10	10	5	10	7.5

Table 7: Decision Matrix

Mitigating the Cylinder Theory

One of the theories for why the starboard side of the A-frame bottomed out before the port side was that the port cylinder was actuating later due to a pressure differential. Remedies for this potential issue are to use two hoses of similar length running to the cylinders or to use a valve that regulates the flow going to each of those hoses. Analysis on the metrology data provides a reason for about half of the gap seen at the port landing pad when the starboard side had bottomed. Without performing additional testing with the A-Frame the benefit of balancing the hydraulic circuits is unknown. However, balancing the system can only help eliminate stresses on the system and is therefore recommended.

Table of Shims and Locations

Appendix B is the raw data for the vectors that will be used to determine what size shims need to go under which mounting holes. This data will not need to be processed until the deck plates are installed and metrology measurements are made on that surface as well as the bottom side of the feet. Once these additional measurements are made, a precise shim solution will be created.

Deck Plate Placement

One of the issues that has always plagued the DWT operations is the placement of the A-Frame feet. During the 2005 DWT, the feet were attached to the A-frame dockside, and the entire assembly was carried onto the ship by crane. The problem with this is that the pick points are located near the leg/docking head mating flange on the leg side. This creates a moment on the legs causing the feet to move inward.

Figure 10 below shows the manufactures specification for mounting the feet to the deck. Figure 11 shows the measurements taken after the A-Frame was mounted during the 2005 DWT operation. Measurement B to C was measured to be 264.8” during the DWT 2005 operation while the drawing calls for 266 +/- 1/8. The A-Frame assembly modeled in spatial analyzer provides a 3rd set of dimensions for a system suspended in air with no moments or forces acting on it. Table 8 below compares the specification, the 2005 DWT session and the values determined analytically. As shown in Table 8, the difference between the drawing and the DWT 05 installation is about 1 inch. Half the analytical dimensions fall within the manufacturers drawing tolerance with the other within a quarter inch. This data gives further evidence that the

past installation procedures have installed an initial error by mounting the A-frame in a pre-stressed position.

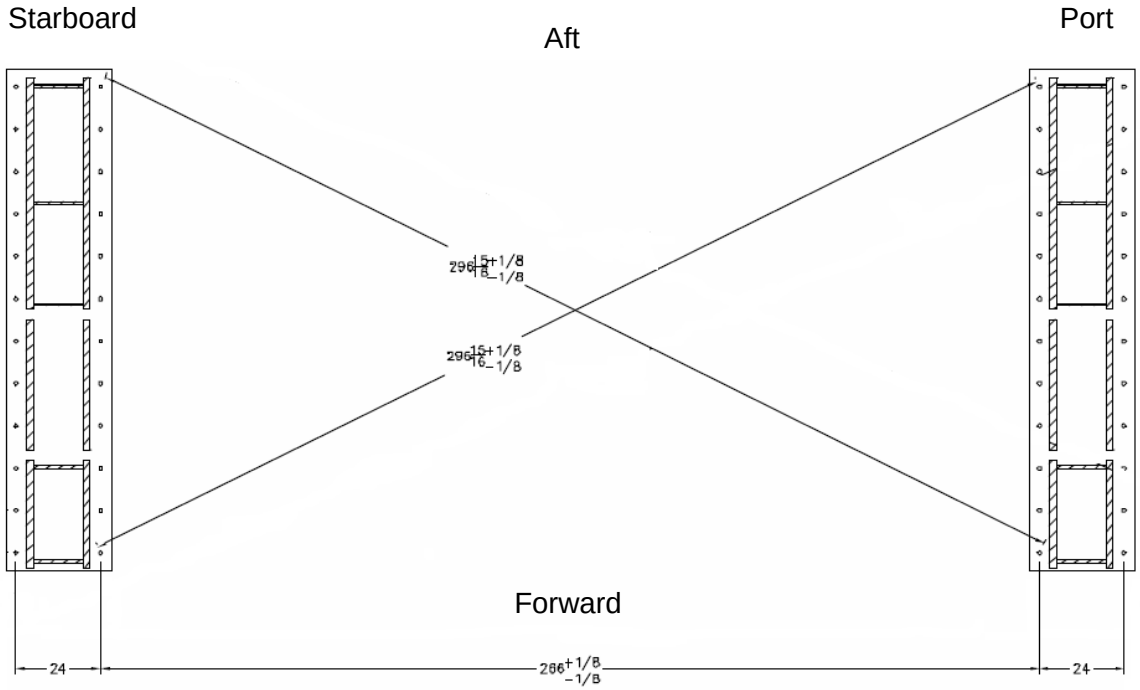

Figure 10: Manufactures Foot Mounting Drawing

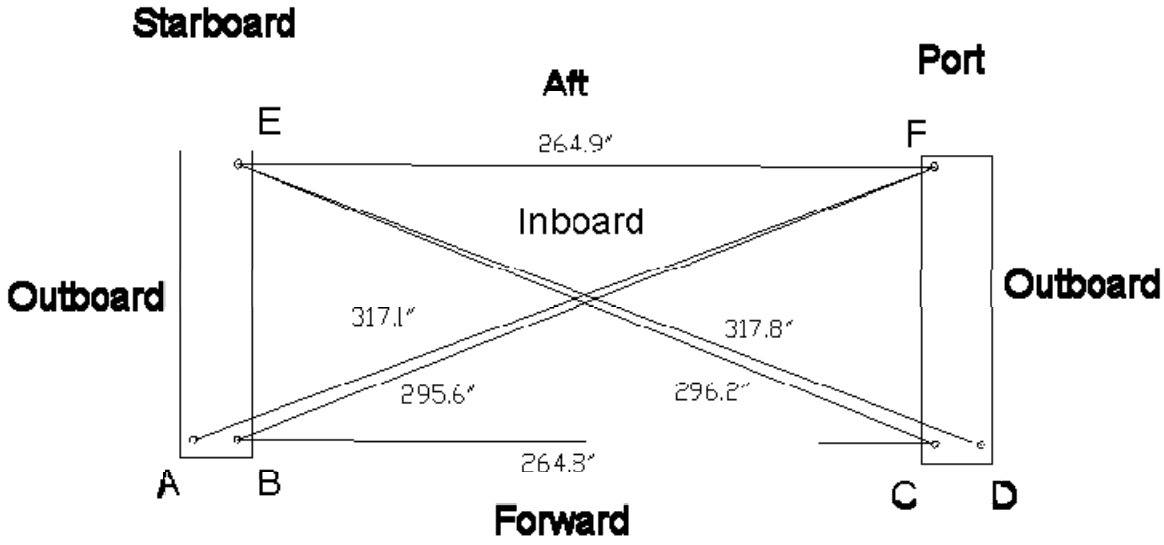

Figure 11: Drawing of Feet Placement During DWT 2005

	Drawing Dim	DWT '05 Dim	Analytical Dim	DWT '05 Difference
B to F	296.94	295.6	296.6	1.34
B to C	266	264.8	265.7	1.2
C to E	296.94	296.2	296.9	0.74
E to F	266	264.9	266	1.1

Table 8: Foot Mounting Dimensions

Spanner Beam for Transport

Once the deck plate mounting holes are placed, the A-Frame will be much harder to install like it had been in the past. The 1 inch deflection seen from picking the A-frame up from its current pick points will continue to exist unless a beam is placed between the legs to stop deflection. This should be a temporary beam used for storage and installation. The beam will need to have a mechanism for lengthening/shortening it, so it won't get stuck during installation. This beam will add rigidity during transport and prevent the legs from deforming permanently and changing the natural orientation of the feet.

Discussion

This study started with the assumption that the A-Frame bore misalignment was causing the banging noise heard during the DWT operations. Although the bores weren't properly in line with each other, the data showed that error within the entire system was to blame. The model translated all of the error to the bottom of the feet. With the error in this location, a series of shims can be installed to compensate for the error outside of bore axis alignment issues.

The models created from the metrology data consistently agreed with what was happening in the field. Firstly, the model showed that the starboard landing pad would hit while the port pad was still .3 inches away which is what was observed in the field. The data also showed that it is important for the system to be installed with the feet matching the manufacturers drawing and not the 1 inch closer that was recorded on the 2005 DWT operation.

Appendix A

Results Using a Single Best Fit Axis Through Both Bores

Two sets of models were generated to understand the impact of how to model a centerline through the bores. One set, created a single centerline through the both of the A-frame bores, and then attached the feet. The other model, used two separate axes (1 for each bore) and the feet were attached to the corresponding axes. Figure 12 below is of the model built on a single centerline. The trends and magnitudes shown in Figure 1 and Figure 12 are very similar and illustrate further that the alignment solution needs to consider the cumulative affect of all the alignments over only the range of motion of the equipment.

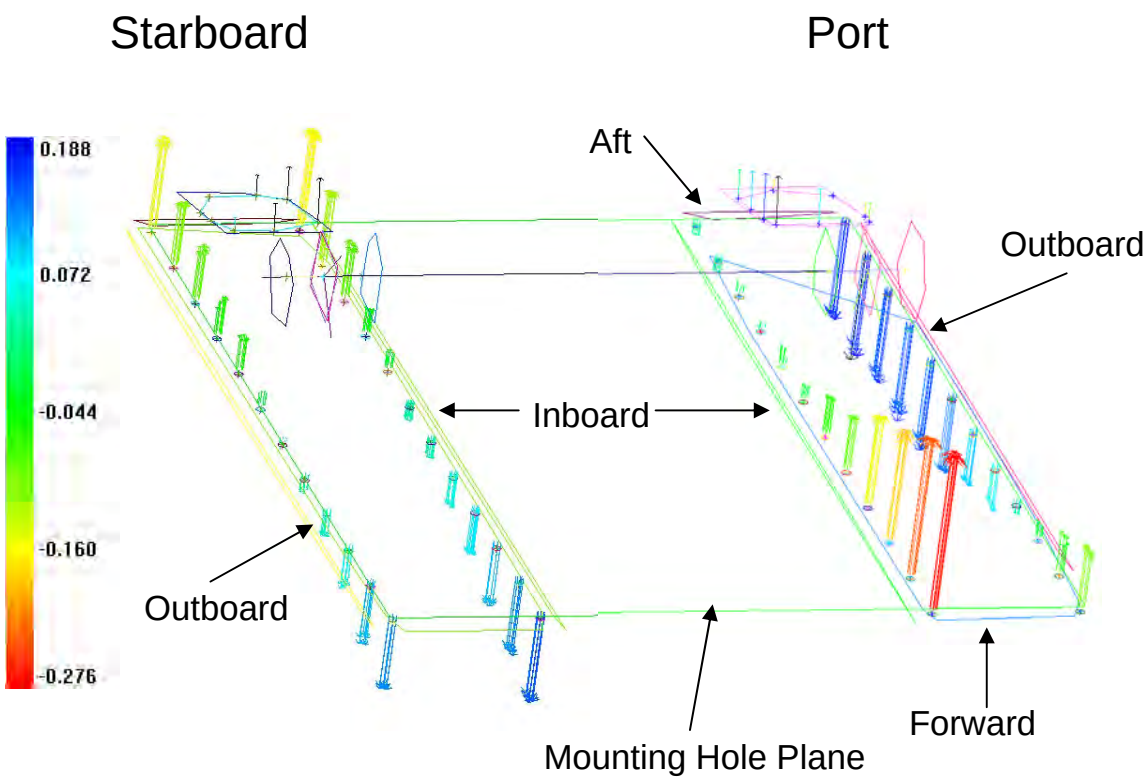

Figure 12: Vector Plot for Luffed Out Model

Appendix B: Table of Vector Values

The following spreadsheet shows the magnitude of each vector that will be used in determining the shim thicknesses.

Vector Name	Magnitude
Starboard::SB base hole 1::p1	-0.183
Starboard::SB base hole 1::p2	-0.1807
Starboard::SB base hole 1::p3	-0.1825
Starboard::SB base hole 1::p4	-0.1832
Starboard::SB base hole 1::p5	-0.1856
Starboard::SB base hole 1::p6	-0.1876
Starboard::SB base hole 1::p7	-0.1876
Starboard::SB base hole 1::p8	-0.1859
Starboard::SB base hole 2::p1	-0.1414
Starboard::SB base hole 2::p2	-0.1429
Starboard::SB base hole 2::p3	-0.1396
Starboard::SB base hole 2::p4	-0.1442
Starboard::SB base hole 2::p5	-0.1428
Starboard::SB base hole 2::p6	-0.1422
Starboard::SB base hole 2::p7	-0.1419
Starboard::SB base hole 2::p8	-0.1427
Starboard::SB base hole 3::p1	-0.1077
Starboard::SB base hole 3::p2	-0.1053
Starboard::SB base hole 3::p3	-0.1065
Starboard::SB base hole 3::p4	-0.1091
Starboard::SB base hole 3::p5	-0.1162
Starboard::SB base hole 3::p6	-0.1178
Starboard::SB base hole 3::p7	-0.1141
Starboard::SB base hole 3::p8	-0.1119
Starboard::SB base hole 3::p9	-0.1072
Starboard::SB base hole 4::p1	-0.0636
Starboard::SB base hole 4::p2	-0.0648
Starboard::SB base hole 4::p3	-0.0651
Starboard::SB base hole 4::p4	-0.0638
Starboard::SB base hole 4::p5	-0.0633
Starboard::SB base hole 4::p6	-0.063
Starboard::SB base hole 4::p7	-0.0605
Starboard::SB base hole 4::p8	-0.0613
Starboard::SB base hole 4::p9	-0.061
Starboard::SB base hole 4::p10	-0.0641
Starboard::SB base hole 5::p1	-0.0452
Starboard::SB base hole 5::p2	-0.0417
Starboard::SB base hole 5::p3	-0.0423
Starboard::SB base hole 5::p4	-0.0435
Starboard::SB base hole 5::p5	-0.0479
Starboard::SB base hole 5::p6	-0.0506

Starboard::SB base hole 5::p7	-0.0504
Starboard::SB base hole 5::p8	-0.0482
Starboard::SB base hole 5::p9	-0.0463
Starboard::SB base hole 6::p1	0.0045
Starboard::SB base hole 6::p2	0.0042
Starboard::SB base hole 6::p3	0.0062
Starboard::SB base hole 6::p4	0.0052
Starboard::SB base hole 6::p5	0.0056
Starboard::SB base hole 6::p6	0.0038
Starboard::SB base hole 6::p7	0.004
Starboard::SB base hole 6::p8	0.0054
Starboard::SB base hole 6::p9	0.0035
Starboard::SB base hole 6::p10	0.0038
Starboard::SB base hole 6::p11	0.0028
Starboard::SB base hole 7::p1	0.0114
Starboard::SB base hole 7::p2	0.0112
Starboard::SB base hole 7::p3	0.01
Starboard::SB base hole 7::p4	0.01
Starboard::SB base hole 7::p5	0.0088
Starboard::SB base hole 7::p6	0.0055
Starboard::SB base hole 7::p7	0.0062
Starboard::SB base hole 7::p8	0.0096
Starboard::SB base hole 7::p9	0.0096
Starboard::SB base hole 7::p10	0.0097
Starboard::SB base hole 8::p1	0.0337
Starboard::SB base hole 8::p2	0.0343
Starboard::SB base hole 8::p3	0.0337
Starboard::SB base hole 8::p4	0.0302
Starboard::SB base hole 8::p5	0.0289
Starboard::SB base hole 8::p6	0.0297
Starboard::SB base hole 8::p7	0.0321
Starboard::SB base hole 8::p8	0.0331
Starboard::SB base hole 9::p1	0.0551
Starboard::SB base hole 9::p2	0.0561
Starboard::SB base hole 9::p3	0.0534
Starboard::SB base hole 9::p4	0.0539
Starboard::SB base hole 9::p5	0.0514
Starboard::SB base hole 9::p6	0.05
Starboard::SB base hole 9::p7	0.0528
Starboard::SB base hole 9::p8	0.0563
Starboard::SB base hole 9::p9	0.0557
Starboard::SB base hole 10::p1	0.078
Starboard::SB base hole 10::p2	0.0778
Starboard::SB base hole 10::p3	0.0752
Starboard::SB base hole 10::p4	0.0743
Starboard::SB base hole 10::p5	0.0822
Starboard::SB base hole 10::p6	0.0812
Starboard::SB base hole 10::p7	0.0875

Starboard::SB base hole 10::p8	0.08
Starboard::SB base hole 11::p1	0.1026
Starboard::SB base hole 11::p2	0.1072
Starboard::SB base hole 11::p3	0.1004
Starboard::SB base hole 11::p4	0.0972
Starboard::SB base hole 11::p5	0.0946
Starboard::SB base hole 11::p6	0.0947
Starboard::SB base hole 11::p7	0.1028
Starboard::SB base hole 11::p8	0.1052
Starboard::SB base hole 12::p1	0.1239
Starboard::SB base hole 12::p2	0.125
Starboard::SB base hole 12::p3	0.122
Starboard::SB base hole 12::p4	0.1246
Starboard::SB base hole 12::p5	0.1191
Starboard::SB base hole 12::p6	0.1154
Starboard::SB base hole 12::p7	0.1239
Starboard::SB base hole 12::p8	0.1322
Starboard::SB base hole 12::p9	0.1238
Starboard::SB base hole 12::p10	0.1251
Starboard::SB base hole 13::p1	-0.1195
Starboard::SB base hole 13::p2	-0.1172
Starboard::SB base hole 13::p3	-0.1217
Starboard::SB base hole 13::p4	-0.1281
Starboard::SB base hole 13::p5	-0.1268
Starboard::SB base hole 13::p6	-0.124
Starboard::SB base hole 13::p7	-0.1194
Starboard::SB base hole 14::p1	-0.0796
Starboard::SB base hole 14::p2	-0.0763
Starboard::SB base hole 14::p3	-0.0739
Starboard::SB base hole 14::p4	-0.0765
Starboard::SB base hole 14::p5	-0.078
Starboard::SB base hole 14::p6	-0.0806
Starboard::SB base hole 14::p7	-0.0805
Starboard::SB base hole 15::p1	-0.0594
Starboard::SB base hole 15::p2	-0.0537
Starboard::SB base hole 15::p3	-0.0528
Starboard::SB base hole 15::p4	-0.0603
Starboard::SB base hole 15::p5	-0.0651
Starboard::SB base hole 15::p6	-0.0642
Starboard::SB base hole 15::p7	-0.0607
Starboard::SB base hole 15::p8	-0.0545
Starboard::SB base hole 16::p1	-0.0347
Starboard::SB base hole 16::p2	-0.0307
Starboard::SB base hole 16::p3	-0.0168
Starboard::SB base hole 16::p4	-0.023
Starboard::SB base hole 16::p5	-0.0349
Starboard::SB base hole 16::p6	-0.0364
Starboard::SB base hole 16::p7	-0.0363

Starboard::SB base hole 16::p8	-0.0367
Starboard::SB base hole 16::p9	-0.0349
Starboard::SB base hole 17::p1	-0.0266
Starboard::SB base hole 17::p2	-0.0252
Starboard::SB base hole 17::p3	-0.0279
Starboard::SB base hole 17::p4	-0.029
Starboard::SB base hole 17::p5	-0.0302
Starboard::SB base hole 17::p6	-0.0281
Starboard::SB base hole 17::p7	-0.028
Starboard::SB base hole 18::p1	0.0161
Starboard::SB base hole 18::p2	0.0138
Starboard::SB base hole 18::p3	0.0099
Starboard::SB base hole 18::p4	0.0072
Starboard::SB base hole 18::p5	0.0057
Starboard::SB base hole 18::p6	0.006
Starboard::SB base hole 18::p7	0.0108
Starboard::SB base hole 19::p1	0.0285
Starboard::SB base hole 19::p2	0.0438
Starboard::SB base hole 19::p3	0.0403
Starboard::SB base hole 19::p4	0.0281
Starboard::SB base hole 19::p5	0.0263
Starboard::SB base hole 19::p6	0.0238
Starboard::SB base hole 19::p7	0.0265
Starboard::SB base hole 20::p1	0.0564
Starboard::SB base hole 20::p2	0.0569
Starboard::SB base hole 20::p3	0.0559
Starboard::SB base hole 20::p4	0.0507
Starboard::SB base hole 20::p5	0.0476
Starboard::SB base hole 20::p6	0.0501
Starboard::SB base hole 20::p7	0.0539
Starboard::SB base hole 21::p1	0.0685
Starboard::SB base hole 21::p2	0.0698
Starboard::SB base hole 21::p3	0.0689
Starboard::SB base hole 21::p4	0.0688
Starboard::SB base hole 21::p5	0.0669
Starboard::SB base hole 21::p6	0.069
Starboard::SB base hole 21::p7	0.0663
Starboard::SB base hole 22::p1	0.0963
Starboard::SB base hole 22::p2	0.0999
Starboard::SB base hole 22::p3	0.0961
Starboard::SB base hole 22::p4	0.0917
Starboard::SB base hole 22::p5	0.0937
Starboard::SB base hole 22::p6	0.093
Starboard::SB base hole 22::p7	0.0966
Starboard::SB base hole 23::p1	0.1317
Starboard::SB base hole 23::p2	0.1354
Starboard::SB base hole 23::p3	0.1263
Starboard::SB base hole 23::p4	0.1221

Starboard::SB base hole 23::p5	0.1203
Starboard::SB base hole 23::p6	0.1223
Starboard::SB base hole 23::p7	0.1337
Starboard::SB base hole 24::p1	0.1462
Starboard::SB base hole 24::p2	0.1518
Starboard::SB base hole 24::p3	0.1493
Starboard::SB base hole 24::p4	0.1489
Starboard::SB base hole 24::p5	0.1524
Starboard::SB base hole 24::p6	0.1494
Starboard::SB base hole 24::p7	0.1494
Port::PORT base hole1::p1	0.1466
Port::PORT base hole1::p2	0.1457
Port::PORT base hole1::p3	0.1428
Port::PORT base hole1::p4	0.1381
Port::PORT base hole1::p5	0.1365
Port::PORT base hole1::p6	0.1401
Port::PORT base hole1::p7	0.1437
Port::PORT base hole2::p1	0.1508
Port::PORT base hole2::p2	0.1386
Port::PORT base hole2::p3	0.131
Port::PORT base hole2::p4	0.1289
Port::PORT base hole2::p5	0.1618
Port::PORT base hole2::p6	0.152
Port::PORT base hole2::p7	0.1503
Port::PORT base hole3::p1	0.1363
Port::PORT base hole3::p2	0.132
Port::PORT base hole3::p3	0.125
Port::PORT base hole3::p4	0.1184
Port::PORT base hole3::p5	0.1156
Port::PORT base hole3::p6	0.1215
Port::PORT base hole3::p7	0.1305
Port::PORT base hole3::p8	0.135
Port::PORT base hole4::p1	0.1284
Port::PORT base hole4::p2	0.1158
Port::PORT base hole4::p3	0.1138
Port::PORT base hole4::p4	0.1134
Port::PORT base hole4::p5	0.124
Port::PORT base hole4::p6	0.1319
Port::PORT base hole4::p7	0.1458
Port::PORT base hole4::p8	0.1302
Port::PORT base hole4::p9	0.1254
Port::PORT base hole5::p1	0.1254
Port::PORT base hole5::p2	0.1118
Port::PORT base hole5::p3	0.1074
Port::PORT base hole5::p4	0.1136
Port::PORT base hole5::p5	0.1359
Port::PORT base hole5::p6	0.1305
Port::PORT base hole5::p7	0.1293

Port::PORT base hole5::p8	0.1157
Port::PORT base hole6::p1	0.1092
Port::PORT base hole6::p2	0.1055
Port::PORT base hole6::p3	0.1046
Port::PORT base hole6::p4	0.1045
Port::PORT base hole6::p5	0.1089
Port::PORT base hole6::p6	0.1087
Port::PORT base hole7::p1	0.0728
Port::PORT base hole7::p2	0.067
Port::PORT base hole7::p3	0.0606
Port::PORT base hole7::p4	0.0596
Port::PORT base hole7::p5	0.065
Port::PORT base hole7::p6	0.0679
Port::PORT base hole7::p7	0.073
Port::PORT base hole8::p1	0.0518
Port::PORT base hole8::p2	0.0438
Port::PORT base hole8::p3	0.038
Port::PORT base hole8::p4	0.0357
Port::PORT base hole8::p5	0.039
Port::PORT base hole8::p6	0.0507
Port::PORT base hole8::p7	0.0535
Port::PORT base hole9::p1	-0.0013
Port::PORT base hole9::p2	-0.0024
Port::PORT base hole9::p3	-0.0063
Port::PORT base hole9::p4	-0.0103
Port::PORT base hole9::p5	-0.0081
Port::PORT base hole9::p6	0.0003
Port::PORT base hole9::p7	0
Port::PORT base hole10::p1	-0.0381
Port::PORT base hole10::p2	-0.0462
Port::PORT base hole10::p3	-0.0512
Port::PORT base hole10::p4	-0.0517
Port::PORT base hole10::p5	-0.0439
Port::PORT base hole10::p6	-0.0382
Port::PORT base hole10::p7	-0.044
Port::PORT base hole11::p1	-0.0732
Port::PORT base hole11::p2	-0.087
Port::PORT base hole11::p3	-0.0901
Port::PORT base hole11::p4	-0.0936
Port::PORT base hole11::p5	-0.0688
Port::PORT base hole11::p6	-0.0664
Port::PORT base hole11::p7	-0.0764
Port::PORT base hole12::p1	-0.1186
Port::PORT base hole12::p2	-0.1129
Port::PORT base hole12::p3	-0.1198
Port::PORT base hole12::p4	-0.1246
Port::PORT base hole12::p5	-0.1289
Port::PORT base hole12::p6	-0.1297

Port::PORT base hole12::p7	-0.1235
Port::PORT base hole12::p8	-0.1161
Port::PORT base hole12::p9	-0.1177
Port::PORT base hole 13::p1	0.051
Port::PORT base hole 13::p2	0.0504
Port::PORT base hole 13::p3	0.0515
Port::PORT base hole 13::p4	0.0538
Port::PORT base hole 13::p5	0.0527
Port::PORT base hole 13::p6	0.0485
Port::PORT base hole 13::p7	0.0511
Port::PORT base hole 13::p8	0.0493
Port::PORT base hole 14::p1	0.0474
Port::PORT base hole 14::p2	0.051
Port::PORT base hole 14::p3	0.0571
Port::PORT base hole 14::p4	0.0587
Port::PORT base hole 14::p5	0.0567
Port::PORT base hole 14::p6	0.0509
Port::PORT base hole 14::p7	0.0476
Port::PORT base hole 14::p8	0.0489
Port::PORT base hole 15::p1	0.021
Port::PORT base hole 15::p2	0.0138
Port::PORT base hole 15::p3	0.0201
Port::PORT base hole 15::p4	0.019
Port::PORT base hole 15::p5	0.0179
Port::PORT base hole 15::p6	0.0181
Port::PORT base hole 15::p7	0.0156
Port::PORT base hole 16::p1	0.0196
Port::PORT base hole 16::p2	0.0243
Port::PORT base hole 16::p3	0.0363
Port::PORT base hole 16::p4	0.0304
Port::PORT base hole 16::p5	0.0248
Port::PORT base hole 16::p6	0.022
Port::PORT base hole 16::p7	0.018
Port::PORT base hole 17::p1	0.0049
Port::PORT base hole 17::p2	0.0011
Port::PORT base hole 17::p3	0.0075
Port::PORT base hole 17::p4	0.0215
Port::PORT base hole 17::p5	0.0309
Port::PORT base hole 17::p6	0.0313
Port::PORT base hole 17::p7	0.0198
Port::PORT base hole 17::p8	0.0025
Port::PORT base hole 17::p9	0.0005
Port::PORT base hole 18::p1	0.0101
Port::PORT base hole 18::p2	0.0085
Port::PORT base hole 18::p3	0.0101
Port::PORT base hole 18::p4	0.01
Port::PORT base hole 18::p5	0.0107
Port::PORT base hole 18::p6	0.0107

Port::PORT base hole 18::p7	0.0104
Port::PORT base hole 18::p8	0.009
Port::PORT base hole 19::p1	-0.0348
Port::PORT base hole 19::p2	-0.0343
Port::PORT base hole 19::p3	-0.0324
Port::PORT base hole 19::p4	-0.0304
Port::PORT base hole 19::p5	-0.0295
Port::PORT base hole 19::p6	-0.0303
Port::PORT base hole 19::p7	-0.0319
Port::PORT base hole 19::p8	-0.0348
Port::PORT base hole 19::p9	-0.0341
Port::PORT base hole 20::p1	-0.0587
Port::PORT base hole 20::p2	-0.0601
Port::PORT base hole 20::p3	-0.0578
Port::PORT base hole 20::p4	-0.0563
Port::PORT base hole 20::p5	-0.0593
Port::PORT base hole 20::p6	-0.0587
Port::PORT base hole 20::p7	-0.0598
Port::PORT base hole 21::p1	-0.1215
Port::PORT base hole 21::p2	-0.1196
Port::PORT base hole 21::p3	-0.1157
Port::PORT base hole 21::p4	-0.1206
Port::PORT base hole 21::p5	-0.1235
Port::PORT base hole 21::p6	-0.1216
Port::PORT base hole 21::p7	-0.1226
Port::PORT base hole 22::p1	-0.1516
Port::PORT base hole 22::p2	-0.16
Port::PORT base hole 22::p3	-0.1503
Port::PORT base hole 22::p4	-0.1363
Port::PORT base hole 22::p5	-0.1442
Port::PORT base hole 22::p6	-0.1553
Port::PORT base hole 22::p7	-0.1615
Port::PORT base hole 23::p1	-0.2078
Port::PORT base hole 23::p2	-0.2075
Port::PORT base hole 23::p3	-0.2065
Port::PORT base hole 23::p4	-0.2034
Port::PORT base hole 23::p5	-0.2034
Port::PORT base hole 23::p6	-0.205
Port::PORT base hole 23::p7	-0.2069
Port::PORT base hole 23::p8	-0.2075
Port::PORT base hole 24::p1	-0.2452
Port::PORT base hole 24::p2	-0.2446
Port::PORT base hole 24::p3	-0.2364
Port::PORT base hole 24::p4	-0.2325
Port::PORT base hole 24::p5	-0.2355
Port::PORT base hole 24::p6	-0.2362
Port::PORT base hole 24::p7	-0.2376
Port::PORT base hole 24::p8	-0.2456