MATCHLINE SEE SHEET M-112

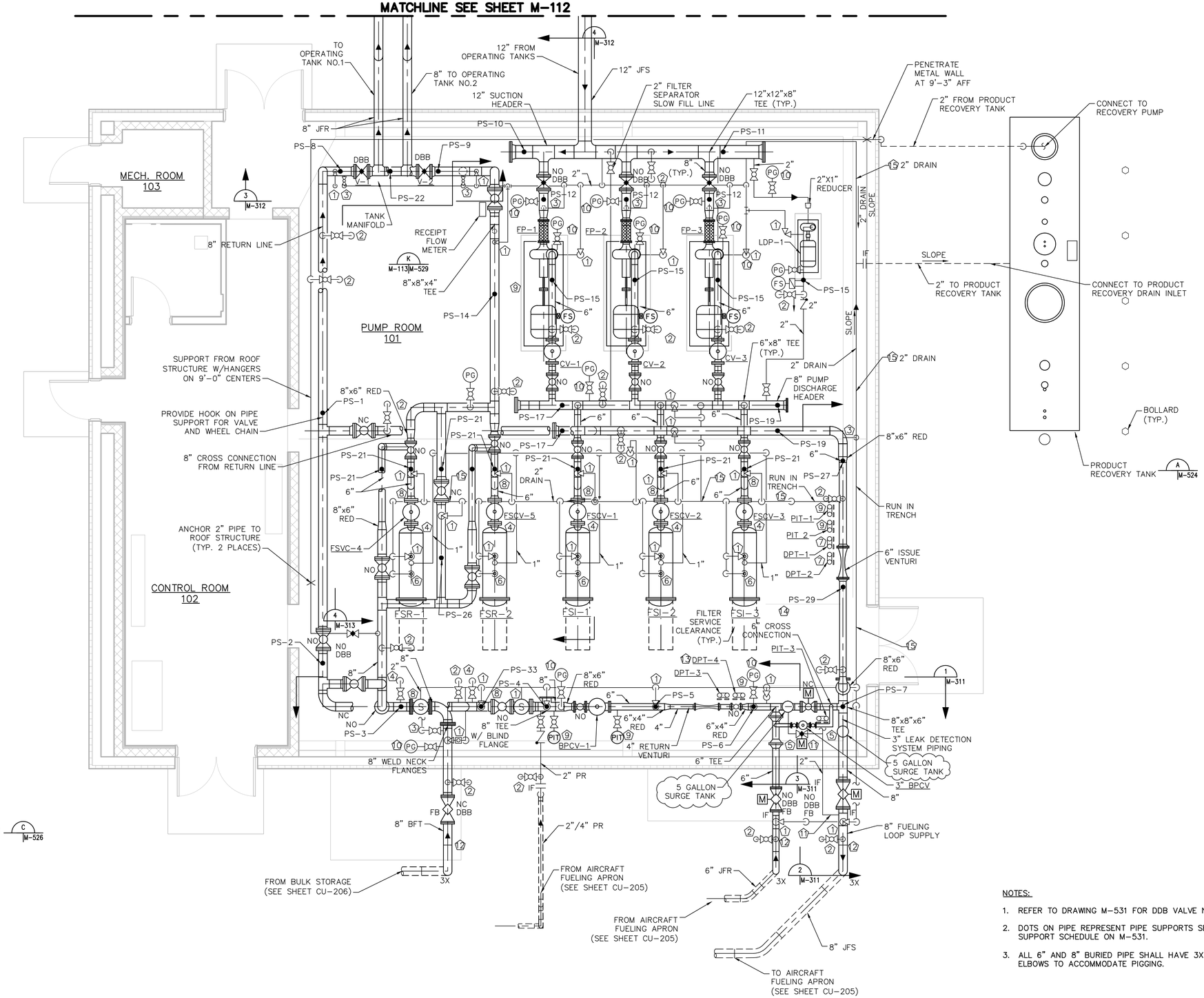

KEY NOTES:

1. TRV PER DETAIL C/M-527
2. MAV PER DETAIL J/M-526
3. LPD 1" BALL VALVE W/ DISCHARGE ROUTED TO DRAIN SYSTEM
4. SC PER DETAIL C/M-523
5. SURGE SUPPRESSOR PER DETAIL A/M-527
6. AAV PER DETAIL C/M-528
7. DPT PER DETAIL H/M-526
8. DIFFERENTIAL PRESSURE GAUGE BETWEEN INLET AND OUTLET OF STRAINER OR FILTER/SEPARATOR
9. PRESSURE INDICATING TRANSMITTER (PIT) PER C/M-526
10. PRESSURE GAUGE PER B/M-527
11. LEAK DETECTION SYSTEM CONNECTIONS PER SPECIFICATION (3 PLACES)
12. RUBBER SEAL AT UG/AG TRANSITION. SEE DRAWING M-311
13. RETURN VENTURI A/M-526
14. ISSUE VENTURI B/M-526
15. 2" PIPING AND SMALLER IS SHOWN SCHEMATICALLY. ROUTE PIPING IN FLOOR TRENCH. COORDINATE WITH ARCHITECTURAL AND STRUCTURAL DETAILS.
16. PACKAGED LEAK DETECTION SYSTEM. ACTUAL CONFIGURATION MAY VARY DEPENDING ON MANUFACTURER.

NOTES:

1. REFER TO DRAWING M-531 FOR DDB VALVE NUMBERS.
2. DOTS ON PIPE REPRESENT PIPE SUPPORTS SEE PIPE SUPPORT SCHEDULE ON M-531.
3. ALL 6" AND 8" BURIED PIPE SHALL HAVE 3X RADIUS ELBOWS TO ACCOMMODATE PIGGING.

PUMP HOUSE PIPING PLAN

SCALE: 1/4" = 1'-0"

SYM	DESCRIPTION	DATE	APPR
	AMENDMENT	9/25/15	

NAVFAC

JACOBS
1100 NORTH GLEBE ROAD
SUITE 500
ARLINGTON, VIRGINIA 22201
TEL: 571.218.1000
FAX: 571.218.1600

COLORADO LICENSED PROFESSIONAL ENGINEER PRESLEY BIERY CAMPBELL 42976 3/9/15

APPROVED
FOR COMMANDER NAVFAC
ACTIVITY
SATISFACTORY TO DATE
DES CPB DRW CAG CHK LAD

DEPARTMENT OF THE NAVY
NAVAL FACILITIES ENGINEERING COMMAND
NAVFAC
NAVAL FACILITIES ENGINEERING COMMAND – WASHINGTON
JOINT BASE ANDREWS – NAVAL AIR FACILITY WASHINGTON
CAMP SPRINGS, MARYLAND
CONSTRUCT HYDRANT FUEL SYSTEM
SUBMITTAL: IFB
DATE: TBD
PUMPHOUSE MECHANICAL PLAN

SCALE: AS SHOWN
EPROJECT NO.: 1304115
CONSTR. CONTR. NO.
NAVFAC DRAWING NO. 13069335
SHEET 110 OF 200
M-113

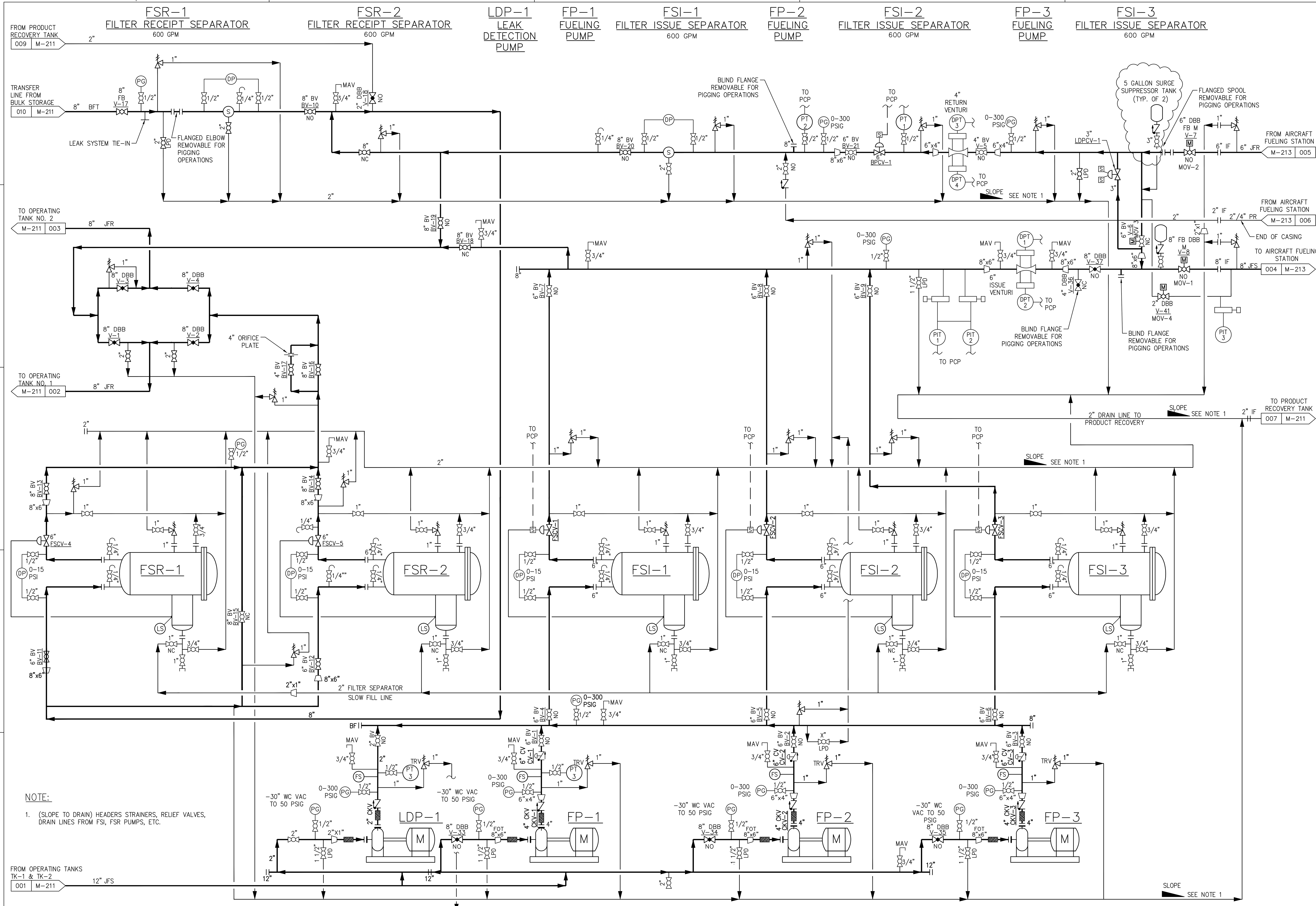

NOTE:

1. (SLOPE TO DRAIN) HEADERS STRAINERS, RELIEF VALVES, DRAIN LINES FROM FSI, FSR PUMPS, ETC.

SYM	DESCRIPTION	DATE	APPR
	AMENDMENT	9/25/15	

NAVFAC

JACOBS
1100 NORTH GLEBE ROAD
SUITE 500
ARLINGTON, VIRGINIA 22201
TEL: 571.218.1000
FAX: 571.218.1600

COLORADO LICENSED PROFESSIONAL ENGINEER
CARTER PRESLEY BIERSMEYER
42976
4/9/15

APPROVED

FOR COMMANDER NAVFAC

ACTIVITY

SATISFACTORY TO DATE

DES CPB | DRW CAG | CHK LAD

DEPARTMENT OF THE NAVY
NAVAL FACILITIES ENGINEERING COMMAND
NAVAL FACILITIES ENGINEERING COMMAND – WASHINGTON
NMIC
CAMP SPRINGS, MARYLAND
JOINT BASE ANDREWS – NAVAL AIR FACILITY WASHINGTON
CONSTRUCT HYDRANT FUEL SYSTEM
DATE: 04/13/15
SUBMITTAL: EBS
FUELING SYSTEM P&ID – PUMPHOUSE

SCALE: AS SHOWN
EPROJECT NO.: 1304115
CONSTR. CONTR. NO.
NAVFAC DRAWING NO. 13069338
SHEET 113 OF 200

M-212

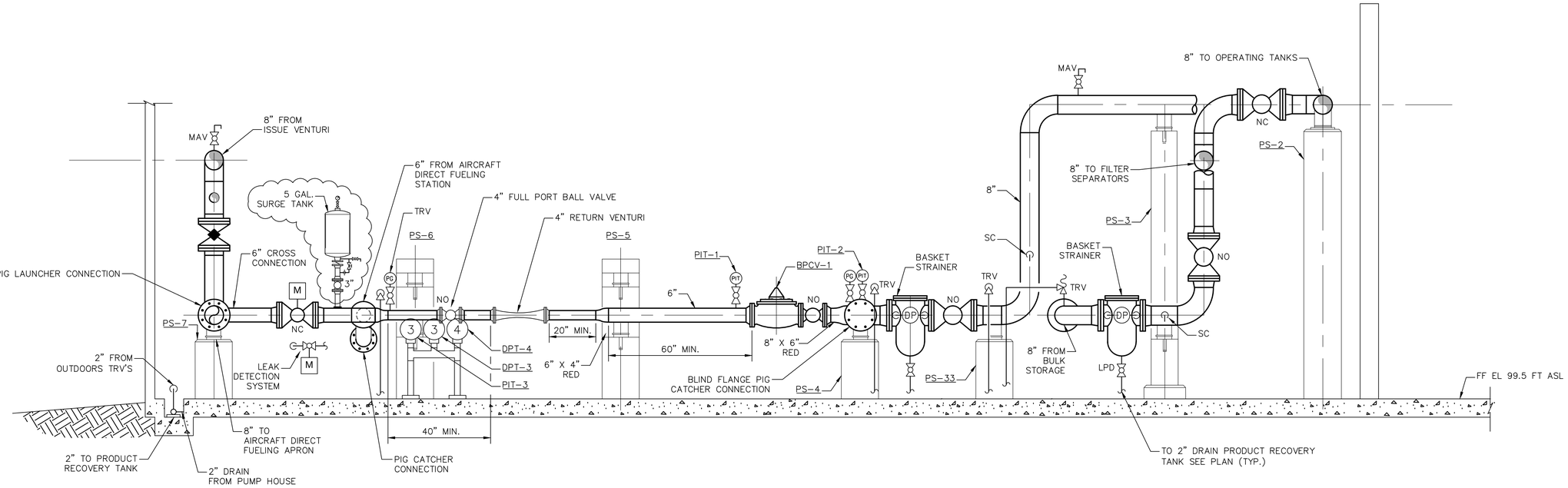

SECTION 1
SCALE: 1/2" = 1'-0" M-113 | M-311

NOTES:

1. VALVE STEMS ON ALL MANUAL SHALL BE HORIZONTAL OR ABOVE WITH OPERATORS ON TOP OF VALVES.
2. SUPPORT 2" DRAIN LINES WITH PIPE CENTERLINES 3" ABOVE FINISHED FLOOR AND TRENCH FLOOR USE CHANNEL SUPPORTS WITH U BOLT ANCHORING.
3. THE TOP OF THE SLEEVE SHALL BE A MINIMUM OF 6" ABOVE GRADE AND THE BOTTOM OF THE SLEEVE SHALL BE BELOW FROST.
4. SEE M-113 FOR DETAIL CROSS REFERENCES.
5. SEE PIPE SUPPORT SCHEDULE FOR ELEVATIONS (SEE SHEET M-531)

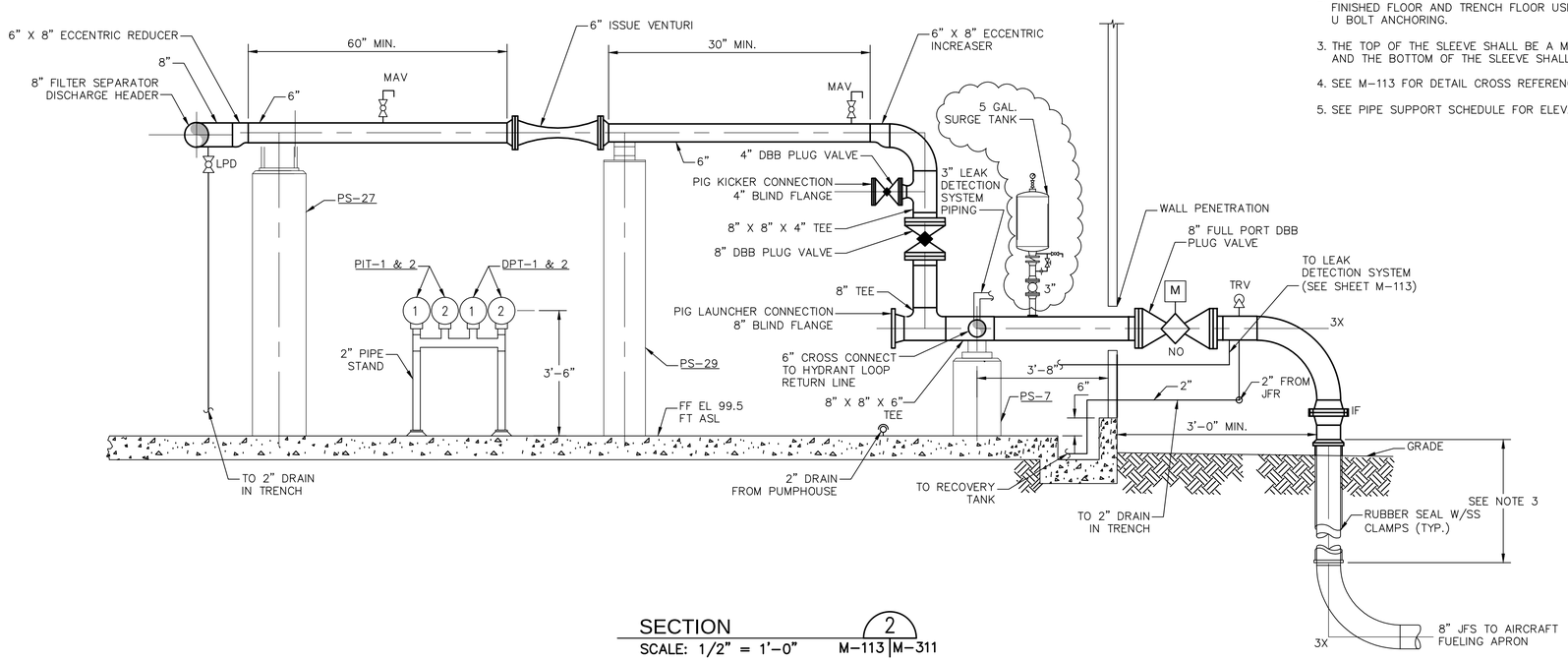

SECTION 2
SCALE: 1/2" = 1'-0" M-113 | M-311

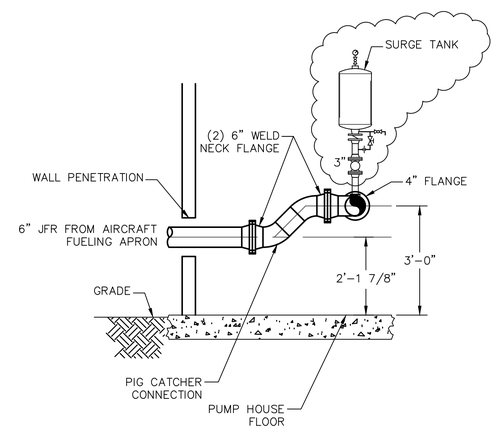

SECTION 3
SCALE: 1/2" = 1'-0" M-113 | M-311

NOTE:

1. REFER TO DRAWING M-612 FOR DBB VALVE NUMBERS

1' 0' 1' 2'
SCALE: 1/2"=1'-0"

SYM	DESCRIPTION	DATE	APPR
	AMENDMENT	9/25/15	

NAVFAC

JACOBS
1100 NORTH GLEBE ROAD
SUITE 500
ARLINGTON, VIRGINIA 22201
TEL: 571.218.1000
FAX: 571.218.1600

COLORADO LICENSED PROFESSIONAL ENGINEER
CARTER PRESLEY BIERSTEDT
42976
4/9/15

APPROVED
FOR COMMANDER NAVFAC
ACTIVITY
SATISFACTORY TO DATE
DES CPB DRW CAG CHK LAD

DEPARTMENT OF THE NAVY
NAVAL FACILITIES ENGINEERING COMMAND
NMIC NAVAL FACILITIES ENGINEERING COMMAND – WASHINGTON
JOINT BASE ANDREWS – NAVAL AIR FACILITY WASHINGTON
CAMP SPRINGS, MARYLAND
CONSTRUCT HYDRANT FUEL SYSTEM
SUBMITTAL: EBS
DATE: 04/13/15
PUMPHOUSE PIPING SECTIONS

SCALE: AS SHOWN
EPROJECT NO.: 1304115
CONSTR. CONTR. NO.
NAVFAC DRAWING NO. 13069341
SHEET 116 OF 200
M-311