STRUCTURAL GENERAL NOTES:

A. GENERAL

1. STRUCTURAL GENERAL NOTES ARE INTENDED TO HIGHLIGHT OR IN SOME CASES SUPPLEMENT PROJECT SPECIFICATIONS. REFER TO THE PROJECT SPECIFICATIONS FOR COMPLETE WORK COVERAGE.

2. THE DESIGN OF THE STRUCTURE COMPLIES WITH THE INTERNATIONAL BUILDING CODE 2012.

3. THE STRUCTURE HAS BEEN DESIGNED IN ACCORDANCE WITH THE DESIGN CRITERIA OF THE TECHNICAL INSTRUCTIONS AS FOLLOWS:

a.	UFC 3-301-01	STRUCTURAL ENGINEERING
b.	UFC 3-310-04	SEISMIC DESIGN FOR BUILDINGS
c.	UFC 3-320-06A	CONCRETE FLOOR SLABS ON GRADE SUBJECTED TO HEAVY LOADS
d.	UFC 3-330-02A	COMMENTARY ON ROOFING SYSTEMS
e.	UFC 4-010-01	DoD MINIMUM ANTITERRORISM STANDARDS FOR BUILDINGS

4. GRAVITY DESIGN LOADS ARE A FOLLOWS:

a.	SUPERIMPOSED DEAD LOADS	
	(1) FINISHES	AS REQUIRED
	(2) MECHANICAL AND CEILING	5 PSF
	(3) ROOFING – BUILT-UP ROOF	6 PSF
	(4) SPRINKLER SYSTEMS	AS REQUIRED (3 PSF MINIMUM)
b.	LIVE LOADS	
	(1) DINING / KITCHEN	150 PSF
	(2) GUARDS	200 LBS POINT LOAD IN ANY DIRECTION AT ANY POINT ALONG THE TOP RAILING
	(3) HANDRAILS	50 PLF IN ANY DIRECTION AND 200 LBS POINT LOAD
	(4) MECHANICAL SPACE	AS REQUIRED
	(5) OFFICE BUILDINGS	
	COMPUTER ROOMS	AS REQUIRED
	LOBBIES AND FIRST FLOOR CORRIDORS	100 PSF OR 2,000 LBS
	OFFICE SPACE	50 PSF OR 2,000 LBS
	(6) PERMANENT CORRIDORS	100 PSF
	(7) ROOF	
	MINIMUM	20 PSF
	SNOW LOADING	20 PSF
	(8) STORAGE – LIGHT	125 PSF

5. IN ACCORDANCE WITH INTERNATIONAL BUILDING CODE'S SECTION 1607.4, THE FLOOR SYSTEM IS DESIGNED TO WITHSTAND CONCENTRATED LOADS ASSUMED ACTING UNIFORMLY ON A 2-1/2 FEET SQUARE AREA AND LOCATED TO PRODUCE THE MAXIMUM EFFECT IN STRUCTURAL MEMBERS.

6. THE DESIGN OF THE STRUCTURE TO RESIST SNOW LOADS IS IN ACCORDANCE WITH THE INTERNATIONAL BUILDING CODE'S SECTION 1608, ASCE 7 CHAPTER 7, AND UFC 3-301-01. DESIGN INFORMATION IS AS FOLLOWS:

(1)	GROUND SNOW LOAD	Pg = 20 PSF
(2)	FLAT ROOF SNOW LOAD	Pf = 20 PSF
(3)	SNOW EXPOSURE FACTOR (TABLE 7-2)	Ce = 1.0
(4)	SNOW LOAD IMPORTANCE FACTOR (TABLE 7-4)	Is = 1.0
(5)	ROOF THERMAL FACTOR (TABLE 7-3)	Ct = 1.0

7. THE DESIGN OF THE STRUCTURE TO RESIST WIND PRESSURES IS IN ACCORDANCE WITH INTERNATIONAL BUILDING CODE'S SECTION 1609.0, WHICH IS BASED ON ASCE 7, CHAPTER 26 AND UFC 3-301-01. DESIGN INFORMATION IS AS FOLLOWS:

a.	BASIC 3 SECOND GUST WIND SPEED	115 MILES PER HOUR
b.	WIND EXPOSURE CATEGORY FOR MAIN RESISTING SYSTEM	D
c.	INTERNAL PRESSURE COEFFICIENT	GCpi = +/- 0.18
d.	COMPONENTS AND CLADDING	SEE PLANS

8. THE DESIGN OF THE STRUCTURE TO RESIST RAIN LOADS IS IN ACCORDANCE WITH INTERNATIONAL BUILDING CODE'S SECTION 1611 AND ASCE 7 CHAPTER 8.

9. THE DESIGN OF THE STRUCTURE TO RESIST SEISMIC FORCES IS IN ACCORDANCE WITH INTERNATIONAL BUILDING CODE'S SECTION 1613, ASCE 7, AND UFC 3-301-01.

a.	OCCUPANCY CATEGORY	II
b.	SEISMIC IMPORTANCE FACTOR (TABLE 11.5-1)	Ie = 1.0
c.	SPECTRAL RESPONSE ACCELERATIONS (USGS SEISMIC HAZARDS PROGRAM)	
	(1) AT SHORT PERIODS	Ss = 0.11 g
	(2) AT ONE SECOND PERIOD	S1 = 0.05 g
d.	SITE CLASS (TABLE 20.3-1)	E
e.	SPECTRAL RESPONSE COEFFICIENTS	
	(1) AT SHORT PERIODS	Sds = 0.176 g
	(2) AT ONE SECOND PERIOD	Sd1 = 0.113 g
f.	SEISMIC DESIGN CATEGORY (TABLES 11.6-1 AND 11.6-2)	B
g.	BASIC SEISMIC FORCE-RESISTING-SYSTEM (TABLE 12.2-1)	BEARING WALL SYSTEM
h.	RESPONSE MODIFICATION FACTOR (TABLE 12.2-1)	R = 4
i.	SEISMIC RESPONSE COEFFICIENT	Cs = 0.03
j.	DESIGN BASE SHEAR	21.6 KIPS
k.	ANALYSIS PROCEDURE	EQUIVALENT LATERAL-FORCE

10. THE FOLLOWING ESTIMATED MECHANICAL EQUIPMENT WEIGHTS ARE COORDINATED WITH THE MECHANICAL ENGINEERS' BASIS OF DESIGN:

a.

RTU-1= 6,700 LBS	RTU-2= 4,010 LBS	RTU-3= 2,000 LBS	DOAS2= 1,700 LBS
RTU-4= 5,600 LBS	RTU-5= 6,200 LBS	RTU-6= 4,630 LBS	DOAS3= 1,700 LBS
RTU-7= 1,600 LBS	RTU-8= 3,250 LBS	DOAS1= 1,444 LBS	

b. FOR CASES WHERE THE PURCHASED EQUIPMENT EXCEEDS THE LISTED ESTIMATED EQUIPMENT WEIGHT BY 10%, CONTACT THE STRUCTURAL ENGINEER TO DETERMINE IF STRUCTURAL STRENGTHENING IS REQUIRED.

11. IMPOSED CONSTRUCTION LOADS IN EXCESS OF STATED DESIGN LOADS MUST BE APPROVED BY THE STRUCTURAL ENGINEER PRIOR TO THE IMPOSITION OF SUCH LOADS.

12. THE GENERAL CONTRACTOR AND SUB-CONTRACTORS SHALL DETERMINE THE SCOPE OF THE STRUCTURAL WORK FROM THE CONTRACT DOCUMENTS TAKEN AS A WHOLE. THE STRUCTURAL DRAWINGS SHALL NOT BE CONSIDERED SEPARATELY FOR PURPOSES OF BIDDING THE STRUCTURAL WORK. DUE CONSIDERATION SHALL BE GIVEN TO OTHER STRUCTURAL WORK OR WORK RELATED TO THE STRUCTURE, INCLUDING NECESSARY COORDINATION DESCRIBED OR IMPLIED BY THE ARCHITECTURAL AND MECHANICAL DRAWINGS.

13. REPRODUCTION OF THE STRUCTURAL CONTRACT DOCUMENTS IN ANY FASHION AS STRUCTURAL SHOP DRAWING DOCUMENTS IS PROHIBITED.

14. SCALES NOTED ON THE DRAWINGS ARE FOR GENERAL INFORMATION ONLY. NO DIMENSIONAL INFORMATION SHALL BE OBTAINED BY DIRECT SCALING OF THE DRAWINGS.

15. DETAILS, SECTIONS AND NOTES SHOWN ON THESE DRAWINGS ARE INTENDED TO BE TYPICAL AND SHALL APPLY TO SIMILAR CONDITIONS ELSEWHERE UNLESS OTHERWISE SHOWN OR NOTED.

16. STRUCTURAL MEMBERS HAVE BEEN LOCATED AND DESIGNED TO ACCOMMODATE THE MECHANICAL EQUIPMENT AND OPENINGS SPECIFIED BY THE MECHANICAL ENGINEER. ANY SUBSTITUTIONS RESULTING IN REVISIONS TO THE STRUCTURE SHALL BE THE RESPONSIBILITY OF THE CONTRACTOR TO COORDINATE WITH THE STRUCTURAL ENGINEER.

17. COORDINATE STRUCTURAL SUPPORT LOCATIONS WITH EQUIPMENT SERVICE ACCESS CLEARANCES PER EACH EQUIPMENT MANUFACTURER AND PER BUILDING CODE.

18. PRINCIPAL OPENINGS IN THE STRUCTURE ARE INDICATED ON THE CONTRACT DOCUMENTS. REFER TO THE ARCHITECTURAL, MECHANICAL, ELECTRICAL, AND PLUMBING DRAWINGS FOR SLEEVES, CURBS, INSERT, ETC. NOT HEREIN INDICATED. OPENINGS IN SLABS WITH A MAXIMUM SIDE DIMENSION OR DIAMETER OF 12 INCHES OR LESS SHALL NOT REQUIRE ADDITIONAL FRAMING OR REINFORCEMENT, UNLESS NOTED OTHERWISE. LOCATION OF SLEEVES OR OPENINGS IN STRUCTURAL MEMBERS SHALL BE SUBMITTED TO THE STRUCTURAL ENGINEER FOR APPROVAL.

19. THE GENERAL CONTRACTOR IS RESPONSIBLE FOR COORDINATION OF ALL RESULTING REVISIONS TO THE STRUCTURAL SYSTEM AS A RESULT OF ACCEPTANCE OF CONTRACTOR PROPOSED ALTERNATIVES OR SUBSTITUTIONS.

20. THE GENERAL CONTRACTOR (OR CONSTRUCTION MANAGER) SHALL SUBMIT SHOP DRAWINGS FOR ALL STRUCTURAL ELEMENTS SHOWN ON THE CONTRACT DOCUMENTS FOR APPROVAL. THE STRUCTURAL ENGINEER WILL NOT BE RESPONSIBLE FOR THE STRUCTURAL CERTIFICATION AND DESIGN OF THE PROJECT IF THE GENERAL CONTRACTOR FAILS TO OBTAIN APPROVAL OF THE SHOP DRAWINGS. SHOP DRAWINGS ARE REVIEWED AS A CONVENIENCE TO THE GENERAL CONTRACTOR AND ARE NOT A CONTRACT DOCUMENT. THE GENERAL CONTRACTOR SHALL STATE ON THE SHOP DRAWINGS THAT CONTRACT DOCUMENT REQUIREMENTS HAVE BEEN MET AND THAT ALL DIMENSIONS, CONDITIONS AND QUANTITIES HAVE BEEN REVIEWED AND VERIFIED AS SHOWN AND/OR CORRECTED ON THE SHOP DRAWINGS.

21. THE CONTRACTOR SHALL BE RESPONSIBLE FOR PROVIDING TEMPORARY BRACING AND SHORING, AS REQUIRED, TO ENSURE VERTICAL AND LATERAL STABILITY OF THE ENTIRE STRUCTURE OR PORTION THEREOF DURING CONSTRUCTION.

22. TEMPORARY BRACING SHALL BE PROVIDED FOR ALL WALLS SUBJECT TO UNBALANCED BACKFILL. BRACE WALL PLUMB UNTIL STABILIZING ELEMENT ABOVE IS IN PLACE.

23. ALL WALLS ARE DESIGNED AS LATERALLY BRACED BY THE FLOOR SYSTEMS. CONTRACTOR SHALL ENSURE THAT WALLS ARE ADEQUATELY BRACED DURING CONSTRUCTION.

24. ALL COLUMNS AND FOOTINGS SHALL BE CENTERED ON GRIDLINES IN EACH DIRECTION, UNLESS NOTED OTHERWISE.

25. INFORMATION SHOWN REGARDING EXISTING CONDITIONS HAS BEEN OBTAINED BY LIMITED OBSERVATIONS. AREAS NOT VISIBLE HAVE BEEN ASSUMED TYPICAL WITH OBSERVED EXISTING CONDITIONS.

26. THE CONTRACTOR SHALL MEASURE AND PROVIDE ALL DIMENSIONS, ELEVATIONS AND CONDITIONS AT THE JOB SITE PRIOR TO CONSTRUCTION AND THE SUBMISSION OF SHOP DRAWINGS AND SHALL NOTIFY THE ARCHITECT AND/OR STRUCTURAL ENGINEER IMMEDIATELY OF ANY DISCREPANCIES.

27. THE GENERAL CONTRACTOR IS RESPONSIBLE FOR FITTING NEW WORK WITH EXISTING CONSTRUCTION. INFORMATION ON EXISTING BUILDING SHOWN IN THESE DRAWINGS WAS BASED UPON THE INFORMATION SUPPLIED TO WILEY WILSON, INC. THIS INFORMATION IS NOT AS-BUILT DATA AND THE ACTUAL AS-BUILT CONSTRUCTION MAY DIFFER FROM THAT REPRESENTED IN THE DRAWINGS. CONTRACTOR SHALL VERIFY ALL INFORMATION. VARIATIONS FROM THE DIMENSIONS INDICATED ON THE CONTRACT DOCUMENTS SHALL BE BROUGHT TO THE ATTENTION OF THE ARCHITECT AND/OR THE STRUCTURAL ENGINEER.

28. METHODS, PROCEDURES, AND SEQUENCES OF CONSTRUCTION ARE THE RESPONSIBILITY OF THE CONTRACTOR. THE CONTRACTOR SHALL TAKE ALL NECESSARY PRECAUTIONS TO MAINTAIN AND INSURE THE INTEGRITY OF THE STRUCTURE AT ALL STAGES OF CONSTRUCTION. CONTRACTOR MUST FABRICATE AND ERECT STEEL IN ACCORDANCE WITH OSHA'S SAFETY REQUIREMENTS, 29 CFR 1926 SAFETY STANDARDS FOR STEEL ERECTION; FINAL RULE.

B. DEMOLITION

1. ALL WORK SHALL BE IN GENERAL COMPLIANCE WITH THE INTERNATIONAL BUILDING CODE 2012.

2. FURNISH ALL LABOR AND MATERIALS NECESSARY TO PERFORM THE DEMOLITION WORK IN A COMPLETED MANNER SUCH THAT NEW WORK CAN BE INSTALLED WITH MINIMUM PREPARATION.

3. CONTRACTOR SHALL INCLUDE IN THE SCOPE OF WORK ALL ASPECTS OF REQUIRED DEMOLITION, SHORING OF EXISTING STRUCTURE, STAGING THE REPAIR TASKS AND SCHEDULING THE WORK IN A MANNER APPROVED BY THE BUILDING MANAGEMENT, CLEAN UP AFTER PORTIONS OF WORK ARE PERFORMED AND CLEAN UP AFTER THE ENTIRE REPAIR IS COMPLETED.

4. CONTRACTOR SHALL BE SOLELY RESPONSIBLE FOR ALL TEMPORARY SHORING AND BRACING REQUIRED FOR DEMOLITION OPERATIONS. CONTRACTOR SHALL BE RESPONSIBLE FOR THE DESIGN OF AND PROCEDURES FOR THE REQUIRED TEMPORARY SHORING. TEMPORARY SHORING SHALL BE IN CONFORMANCE WITH OSHA REGULATIONS.

5. THE CONTRACTOR SHALL TAKE PRECAUTIONS TO PREVENT DAMAGE OF THE EXISTING STRUCTURE. IN THE EVENT OF DAMAGE, CONTRACTOR SHALL PROVIDE TEMPORARY SHORING AND CONTACT THE STRUCTURAL ENGINEER FOR ASSESSMENT OF THE DAMAGE.

6. SCHEDULE ALL WORK IN A CAREFUL MANNER WITH ALL NECESSARY CONSIDERATION FOR FACILITY OPERATIONS, AND FACILITY PERSONNEL. ANY DAMAGE TO PERSON OR PROPERTY AS A RESULT OF DEMOLITION AND RELATED WORK SHALL BE THE RESPONSIBILITY OF THE CONTRACTOR.

7. ERECT BARRIERS FENCES, GUARDRAILS, WARNING DEVICES AND SHORING TO PROTECT PERSONNEL WORKING IN THE AREA.

8. SUBMIT PROCEDURES AND SCHEDULE PROPOSED FOR THE ACCOMPLISHMENT OF THE DEMOLITION WORK TO THE OWNER FOR APPROVAL. INCLUDE SAFE CONDUCT OF THE WORK, DISPOSITION OF MATERIALS, PROTECTION OF REMAINING PROPERTY AND COORDINATION WITH OTHER WORK.

THE CONTRACTOR SHALL TAKE MEASURES TO COORDINATE THE CONSTRUCTION SUCH THAT INTERFERENCE OF EXISTING REINFORCING STEEL WITH PLACEMENT OF NEW ANCHORS (DOWELS, EXPANSION BOLTS, ADHESIVE ANCHORS) DOES NOT OCCUR. IF EXISTING REINFORCING STEEL IS ENCOUNTERED DURING DRILLING, ADJUST THE ANCHOR LOCATION IF POSSIBLE AND NOTIFY THE STRUCTURAL ENGINEER. ABANDONED HOLES SHALL BE FILLED WITH GROUT. ANCHORS SHALL BE SET WITHIN 3 INCHES OF THEIR SPECIFIED LOCATION, BUT AT LEAST 1 INCH FROM ANY ABANDONED HOLE. CARE SHALL BE TAKEN NOT TO BREAK OR DAMAGE REINFORCING STEEL DURING DRILLING, UNLESS OTHERWISE DIRECTED BY THE STRUCTURAL ENGINEER.

C. FOUNDATIONS AND EARTHWORK

1. GEOTECHNICAL INFORMATION IS CONTAINED IN A REPORT PREPARED BY GEOCONCEPTS ENGINEERING, INC., DATED JANUARY 11, 2016. BORING LOGS AND LABORATORY TEST RESULTS ARE INCLUDED FOR REFERENCE IN THE PROJECT MANUAL.

2. THE CONTRACTOR SHALL COMPLY WITH THE RECOMMENDATIONS CONTAINED IN THE GEOTECHNICAL REPORT AND THE PROJECT SPECIFICATIONS WHEN PERFORMING EXCAVATIONS, FOOTING CONSTRUCTION, AND PREPARING THE SUBGRADE UNDER THE SLAB ON GRADE.

3. IF CONSTRUCTION FOUNDATION CONDITIONS VARY FROM THE GEOTECHNICAL REPORT, BEFORE CONTINUING CONSTRUCTION, NOTIFY THE GEOTECHNICAL ENGINEER, STRUCTURAL ENGINEER AND ARCHITECT.

4. THE FOUNDATION DESIGN FOR THE STRUCTURE IS FOR AN ALLOWABLE SOIL BEARING PRESSURE OF 2000 PSF. FOUNDATIONS EXPOSED TO FROST SHALL BEAR A MINIMUM OF 26 INCHES BELOW FINISHED GRADE.

5. DO NOT OVER EXCAVATE THE FOOTPRINT OF SPREAD AND STRIP FOOTINGS. IF OVER EXCAVATION IS REQUIRED BEYOND THE 3 INCH CONSTRUCTION TOLERANCE, FORM THE SIDES OF THE FOOTING.

6. CLEAN AND TAMP SHALLOW FOUNDATION EXCAVATIONS TO A UNIFORM SURFACE. IF PLACEMENT OF CONCRETE IS NOT WITHIN 24 HOURS OF FOUNDATION EXCAVATION, TEMPORARILY PROTECT SIDES AND BOTTOMS OF FOUNDATION EXCAVATIONS WITH A POLYETHYLENE MEMBRANE.

7. PLACE CONCRETE FOR WALL FOOTINGS MONOLITHICALLY WITH COLUMN FOOTINGS. CONSTRUCTION JOINTS IN WALL FOOTINGS SHALL BE MADE ONLY MIDWAY BETWEEN COLUMN FOOTINGS.

8. ALWAYS PROVIDE POSITIVE SURFACE WATER DRAINAGE AWAY FROM THE STRUCTURE.

D. SOIL SUPPORTED SLABS

1. FILL THAT SUPPORTS SLABS SHALL HAVE A MAXIMUM PLASTICITY INDEX OF 15. PREPARE, PLACE AND COMPACT AS RECOMMENDED IN THE GEOTECHNICAL REPORT.

2. FOR SOIL SUPPORTED SLABS, PROPERLY COMPACT AND PROOFROLL SUBGRADE AS RECOMMENDED IN THE GEOTECHNICAL REPORT. MAINTAIN THE SUBGRADE FREE OF STANDING WATER, MUD AND FROZEN SOIL. PROVIDE A MINIMUM OF 6 INCHES OF GRANULAR MATERIAL PER THE GEOTECHNICAL REPORT. COVER GRANULAR MATERIAL WITH A VAPOR RETARDER BEFORE PLACING THE SLAB.

3. FOR SLAB ON GRADE REINFORCEMENT, PROVIDE WELDED WIRE FABRIC IN FLAT SHEETS.

4. SUPPORT SLAB ON GRADE REINFORCEMENT WITH STANDARD CORROSION RESISTANT HIGH CHAIRS WITH SAND BEARING PLATES.

5. WHERE SLAB CONTROL JOINTS ARE SHOWN ON THE DRAWINGS, CONSTRUCTION JOINTS MAY BE SUBSTITUTED TO ACCOMMODATE THE CONTRACTOR'S PLACEMENT STRATEGY.

6. FREE WATER ON THE SLAB SURFACE DURING FINISHING OPERATIONS IS PROHIBITED. SOFT CUT CONTROL JOINTS AS SOON AS POSSIBLE – GENERALLY WITHIN 4 HOURS AFTER FINISHING.

SYM	DESCRIPTION	DATE	APPR

NAVFAC

COMMONWEALTH OF VIRGINIA
SCOTT M. FRANCIS
Lic. No. 039500
3/18/16
PROFESSIONAL ENGINEER
SEAL

Wiley|Wilson | BURNS McDONNELL
JOINT VENTURE

A/E INFO.

APPROVED

FOR COMMANDER NAVFAC / B.L.T.L

ACTIVITY

SATISFACTORY TO DATE

DES SMF	DRW SMF	CHK MV

PROJECT MANAGER

IPT TECH. BRANCH HEAD

CHIEF ENG/ARCH

DEPARTMENT OF THE NAVY
NAVAL FACILITIES ENGINEERING COMMAND
WEBSTER FIELD, NAS PATUXENT RIVER

NAVAL FACILITIES ENGINEERING COMMAND ~ WASHINGTON
ST. INIGOES, MD

NAVAL AIR STATION PATUXENT RIVER

ST. INIGOES, MD

BUILDING 8008 REPAIRS, ALTERATIONS AND ADDITION

GENERAL NOTES

SCALE: AS NOTED
EPROJECT NO. 1183080
CONSTR. CONTR. NO. N40080-15-D-0452
NAVFAC DRAWING NO. 13078312
SHEET 28 OF 180
S-001

DRAWFORM REVISION: 10 MAY 2014

FILE NAME: C:\Users\Public\Documents\Revit 2015\215135R15_S_CEN_sfrancis.rvt
REVDATE: 3/17/2016 1:19:55 PM

E. CONCRETE

1. ALL CONCRETE WORK SHALL BE IN ACCORDANCE WITH ACI 301 AND ACI 302.

2. PROVIDE CONCRETE WITH A MINIMUM COMPRESSIVE STRENGTH (f'c) AT 28 DAYS AND A MAXIMUM WATER/CEMENT RATIO AS FOLLOWS:

a.	FOOTINGS	3,500 PSI	0.50
b.	SLABS ON GRADE	4,000 PSI	0.45
c.	OTHER CONCRETE EXPOSED TO FREEZING	4,000 PSI	0.45

USE NORMAL WEIGHT AGGREGATES CONFORMING TO ASTM C33 AND TYPE I AND/OR II PORTLAND CEMENT CONFORMING TO ASTM C150. CONCRETE EXPOSED TO FREEZING SHALL MEET ACI 318, SECTION 4.2.

3. FLY ASH CONFORMING TO ASTM C618, TYPE C OR F MAY BE USED AS TO REPLACE A PORTION OF THE PORTLAND CEMENT IN A CONCRETE MIX. THE AMOUNT OF PORTLAND CEMENT CONTENT SHALL NOT BE LESS THAN 70 PERCENT OF THE TOTAL AMOUNT OF CEMENTITIOUS MATERIAL IN THE MIX.

4. GROUND GRANULATED BLAST-FURNACE SLAG CONFORMING TO ASTM C989, MAY BE USED AS TO REPLACE A PORTION OF THE PORTLAND CEMENT IN A CONCRETE MIX. THE AMOUNT OF PORTLAND CEMENT CONTENT SHALL NOT BE LESS THAN 70 PERCENT OF THE TOTAL AMOUNT OF CEMENTITIOUS MATERIAL IN THE MIX.

5. CONCRETE REINFORCEMENT BARS SHALL CONFORM TO ASTM A615, GRADE 60. REINFORCEMENT BARS SHALL NOT BE TACK WELDED, WELDED, HEATED OR CUT UNLESS INDICATED ON THE CONTRACT DOCUMENTS OR APPROVED BY THE STRUCTURAL ENGINEER.

6. PROVIDE WELDED WIRE FABRIC CONFORMING TO ASTM A1064 IN FLAT SHEETS. LAP FABRIC TWO MESHES AT SPLICES.

7. GROUT UNDER ALL COLUMN BASE PLATES AND BEAM BEARING PLATES WITH NON-SHRINK, NON-METALLIC GROUT WHICH CONFORMS TO CORPS OF ENGINEERS SPECIFICATION CRD-C 621-82 OR ASTM C1107.

8. DETAILING OF CONCRETE REINFORCEMENT BARS AND ACCESSORIES SHALL CONFORM TO THE RECOMMENDATIONS OF ACI 315 "DETAILS AND DETAILING OF CONCRETE REINFORCEMENT" AND ACI SP-66 "DETAILING MANUAL". PLACING OF REINFORCING BARS SHALL CONFORM TO THE RECOMMENDATIONS OF ACI 315R "MANUAL OF ENGINEERING AND PLACING DRAWINGS FOR REINFORCED CONCRETE STRUCTURES" AND CRSI "MANUAL OF STANDARD PRACTICE".

9. MIX, TRANSPORT AND PLACE CONCRETE PER THE RECOMMENDATIONS OF ACI 301.

10. PROVIDE CONCRETE COVER PROTECTION OF REINFORCEMENT PER ACI 301 SECTION 7.7 WITH STANDARD BAR CHAIRS AND SPACERS REQUIRED TO MAINTAIN MINIMUM CONCRETE PROTECTION. COMMON MINIMUM CONCRETE COVERS APPLYING TO THIS PROJECT:

a.	CAST AGAINST AND PERMANENTLY EXPOSED EARTH .. 3 INCHES	
b.	CONCRETE EXPOSED TO EARTH OR WEATHER	
(1)	#6 BARS AND LARGER	2 INCHES
(2)	#5 BARS AND SMALLER	1 ½ INCHES
c.	CONCRETE NOT EXPOSED TO WEATHER OR GROUND CONTACT	
(1)	SLABS, WALLS OR JOISTS	
	#14 BARS AND LARGER	1 ½ INCHES
	#11 BARS AND SMALLER	¾ INCHES
(2)	BEAMS OR COLUMNS	
	PRIMARY REINFORCEMENT	1 ½ INCHES
	TIES, STIRRUPS, SPIRALS	1 ½ INCHES
(3)	SHELLS OR FOLDED PLATE MEMBERS	
	#6 BARS AND LARGER	1 ½ INCHES
	#5, W31 OR D31 WIRE AND SMALLER	¾ INCHES
d.	IN ADDITION, COVERS SHALL NOT EXCEED THE FOLLOWING:	
(1)	GRADE BEAMS	
	TOP	1 ½ INCHES
	EARTH FORMED SIDES	3 INCHES
	BOARD FORMED SIDES	2 INCHES
	BOTTOM	3 INCHES
(2)	PILASTERS AND PLINTHS	2 INCHES
(3)	WALLS BELOW GRADE (BACKFILLED SIDE)	2 INCHES
(4)	WALLS BELOW GRADE (NO BACKFILL)	¾ INCHES
(5)	PAN FORMED JOISTS	¾ INCHES
(6)	SLABS ON GRADE	2 INCHES (TOP)
(7)	SLABS ON METAL FORMS	¾ INCHES (TOP)
(8)	STRUCTURAL SLABS SUPPORTING VEHICLES	1 ½ INCHES
(9)	COMPOSITE TOPPING	¾ INCHES (TOP)
(10)	COLUMNS	1 ½ INCHES
(11)	BEAMS	1 ½ INCHES

11. REINFORCEMENT DESIGNATED AS "CONTINUOUS" SHALL LAP 48 BAR DIAMETERS AT SPLICES UNLESS NOTED OTHERWISE. REINFORCEMENT BAR SPLICES IN GRADE BEAMS SHALL BE LOCATED AT THE CENTERLINE OF SUPPORTS FOR BOTTOM BARS AND AT MIDSPAN FOR TOP BARS. PROVIDE STANDARD ACI HOOKS FOR TOP AND BOTTOM BARS AT DISCONTINUOUS ENDS OF ALL GRADE BEAMS.

12. HORIZONTAL FOOTING AND HORIZONTAL WALL REINFORCEMENT SHALL BE CONTINUOUS AND SHALL HAVE 90-DEGREE BENDS AND EXTENSIONS, OR CORNER BARS OF EQUIVALENT SIZE LAPPED 48 BAR DIAMETERS, AT CORNERS AND INTERSECTIONS.

13. PROVIDE CORNER BARS AT ALL WALL INTERSECTIONS WITH SIZE AND SPACING TO MATCH HORIZONTAL WALL REINFORCEMENT.

14. TIE DOWELS IN PLACE BEFORE PLACING CONCRETE. DO NOT STAB OR "WET-SET" DOWELS.

15. HORIZONTAL JOINTS WILL NOT BE PERMITTED IN CONCRETE CONSTRUCTION EXCEPT AS SHOWN ON THE CONTRACT DOCUMENTS. VERTICAL JOINTS SHALL OCCUR AT CENTER OF SPANS AT LOCATIONS APPROVED BY THE STRUCTURAL ENGINEER.

16. PROVIDE HORIZONTAL CONSTRUCTION JOINTS ONLY WHERE SHOWN IN THE CONTRACT DOCUMENTS. AT HORIZONTAL JOINTS, ROUGHEN THE LOWER CONTACT SURFACE WITH ABOUT A ¼ INCH AMPLITUDE. REMOVE ANY LAITANCE FROM THE HARDENED CONTACT SURFACE AND MAINTAIN A CLEAN CONTACT SURFACE FOR THE ADJOINING POUR.

17. CHAMFER EXPOSED EDGES OF CONCRETE ¾" UNLESS OTHERWISE NOTED.

18. PROTECT AND CURE ALL CONCRETE SURFACES. BEGIN CURING WALLS IMMEDIATELY AFTER STRIPPING FORMS AND FLATWORK IMMEDIATELY AFTER FINISHING.

19. INSTALL AND SECURE EMBEDMENTS SUCH AS ANCHOR BOLTS AND EMBEDMENT PLATES WITHIN SPECIFIED TOLERANCES BEFORE CONCRETE PLACEMENT.

20. DO NOT PLACE CONDUIT OR PIPES IN ANY CONCRETE ELEMENTS INCLUDING SLABS, BEAMS, WALLS OR COLUMNS UNLESS INDICATED IN THE STRUCTURAL DOCUMENTS.

F. CONCRETE MASONRY

1. MASONRY CONSTRUCTION SHALL BE PERFORMED IN ACCORDANCE WITH ACI 530 "BUILDING CODE REQUIREMENTS FOR CONCRETE MASONRY STRUCTURES" AND ACI 530.1, "SPECIFICATIONS FOR MASONRY STRUCTURES."

2. CONCRETE MASONRY UNITS SHALL CONFORM TO ASTM C90, GRADE N-1 UNLESS OTHERWISE NOTED. COMPRESSIVE STRENGTH ON NET CROSS SECTIONAL AREA OF INDIVIDUAL MASONRY UNITS SHALL BE 1,900 PSI. NET AREA COMPRESSIVE STRENGTH OF MASONRY (f'm) SHALL BE 1,500 PSI.

3. MASONRY SHALL BE LAID IN ASTM C270, TYPE "S" MORTAR, UNLESS NOTED OTHERWISE AND SHALL HAVE FULL MORTAR COVERAGE OF THE FACE SHELLS IN BOTH HORIZONTAL AND VERTICAL JOINTS.

4. GROUT FOR REINFORCED MASONRY SHALL CONFORM TO ASTM C476.

5. GROUT FOR REINFORCED MASONRY SHALL HAVE A COMPRESSIVE STRENGTH OF 3,000 PSI AT 28 DAYS AND SHALL CONFORM TO THE FOLLOWING:

a. GROUT IN SPACES 3" X 4" AND GREATER SHALL HAVE A SLUMP OF 9" TO 11" WITH 3/8" MAXIMUM AGGREGATE SIZE.
b. GROUT IN SPACES 2" X 4" AND SMALLER SHALL HAVE A SLUMP OF 5" AND CONFORM TO ASTM C476.

6. GALVANIZED HORIZONTAL JOINT REINFORCEMENT SHALL BE PLACED IMMEDIATELY ABOVE AND BELOW ALL OPENINGS AND AT 16 INCHES ON CENTER VERTICALLY. REINFORCEMENT SHALL BE LADDER TYPE, AND WHERE SPLICED, SHALL LAP A MINIMUM OF 6 INCHES. REINFORCEMENT SHALL CONFORM TO ATSM A82.

7. EXCEPT FOR WALL PILASTERS, VERTICAL MASONRY REINFORCEMENT SHALL BE FIELD CUT FOR 4'-0" LIFTS AND LAPPED SPLICED A MINIMUM OF 48 BAR DIAMETERS. MASONRY CORES CONTAINING VERTICAL REINFORCEMENT SHALL BE GROUTED SOLID.

8. CELLS TO BE GROUTED SHALL BE CLEAN AND FREE OF EXCESS MORTAR AND FOREIGN MATERIALS.

9. GROUT ALL CELLS THAT INCLUDE REINFORCEMENT, ANCHORS OR STRUCTURAL EMBEDMENTS. PLACE GROUT IN 4'-0" LIFTS. CONSOLIDATE ALL GROUT PLACEMENTS BY MECHANICAL VIBRATION. PROVIDE CLEANOUTS FOR TOTAL GROUT PLACEMENT HEIGHT OVER 5'-0".

10. PROVIDE 2 COURSES OF SOLID CMU PER ASTM C145 OR GROUT-FILLED CMU BENEATH ALL BEAMS AND HEADER BEARING POINTS.

11. PROVIDE MASONRY ACCESSORIES TO SECURE VERTICAL REINFORCEMENT IN PLACE AND CORRECTLY POSITIONED. VERTICAL REINFORCEMENT IS TO BE CENTERED IN THE MASONRY CELLS UNLESS INDICATED OTHERWISE.

12. REINFORCEMENT SHALL CONFORM TO THE STANDARDS SPECIFIED IN THE CONCRETE NOTES. REINFORCEMENT SHALL BE LAP SPLICED A MINIMUM OF 48 BAR DIAMETERS UNLESS NOTED OTHERWISE.

13. THE MASONRY CONTRACTOR SHALL PROVIDE AND PLACE SUCH SPECIAL UNITS AS MAY BE REQUIRED TO FORM ALL CORNERS, RETURNS, AND OFFSETS WHILE MAINTAINING THE PROPER BOND.

14. WHERE INTERIOR CONCRETE MASONRY PARTITIONS INTERSECT WITH OTHER INTERIOR PARTITIONS OR EXTERIOR WALLS, A MASONRY BOND, OR THE EQUIVALENT IN APPROVED METAL TIES, SHALL BE PROVIDED UNLESS NOTED OTHERWISE ON THE DRAWINGS.

15. REINFORCE ALL JAMB CELLS, CORNER CELLS, TEE CELLS, END CELLS AND AT EACH SIDE OF CONTROL JOINTS FULL HEIGHT – MATCH TYPICAL WALL REINFORCING UNLESS OTHERWISE NOTED.

16. FACE SHELL BEDDING SHALL BE USED WITH COMPLETE COVERAGE OF FACE SHELLS. FURROWING OF THE MORTAR SHALL NOT BE PERMITTED.

17. MORTAR JOINTS SHALL BE 3/8" THICK WITH FULL MORTAR COVERAGE ON VERTICAL AND HORIZONTAL FACE SHELLS.

18. REINFORCEMENT PLACED IN BOND BEAMS SHALL BE LAPPED A MINIMUM OF 48 BAR DIAMETERS AT SPLICES. PROVIDE CORNER BARS OF EQUIVALENT SIZE LAPPED 48 BAR DIAMETERS AT CORNERS AND INTERSECTIONS OF WALLS.

19. WHERE MASONRY WALLS EXCEED AN EIGHT FOOT HEIGHT, SUBMIT SHOP DRAWINGS AND CALCULATIONS FOR TEMPORARY WALL BRACING SIGNED AND SEALED BY A PROFESSIONAL ENGINEER REGISTERED IN THE JURISDICTION OF CONSTRUCTION.

G. STRUCTURAL STEEL

1. UNLESS NOTED OTHERWISE, STRUCTURAL STEEL SHALL CONFORM TO THE FOLLOWING:

a.	ANCHOR BOLTS	ASTM F1554, GRADE 36
b.	WIDE FLANGE SHAPES	ASTM A992-01, 50 KSI
c.	ANGLES	ASTM A36
d.	CHANNELS	ASTM A36
e.	PLATES	ASTM A36
f.	HSS RECTANGULAR	ASTM A500, GRADE C (Fy = 50 KSI)
g.	HSS ROUND	ASTM A500, GRADE B (Fy = 42 KSI)
h.	STEEL PIPE	ASTM A53, GRADE B (Fy = 35 KSI)
i.	ROUND BAR	ASTM A36

SUBMIT MILL TEST REPORTS FOR REVIEW.

2. BOLTS FOR STRUCTURAL STEEL CONNECTIONS SHALL BE HIGH STRENGTH BOLTS PER THE REQUIREMENTS OF ASTM A325, TYPE N OR X. UNLESS NOTED OTHERWISE, PROVIDE BOLTS DESIGNED AS BEARING TYPE BOLTS AND INSTALL PER THE "SNUG TIGHT" CONDITION. INSTALL A HARDENED WASHER UNDER THE ELEMENT TO BE TIGHTENED.

3. DETAIL, FABRICATE AND ERECT STRUCTURAL STEEL PER THE AISC "SPECIFICATION FOR STRUCTURAL STEEL BUILDINGS," THE AISC "CODE OF STANDARD PRACTICE FOR STEEL BUILDINGS AND BRIDGES" AND THE SAFETY REQUIREMENTS OF THE OCCUPATIONAL SAFETY AND HEALTH ADMINISTRATION AND THE LOCAL JURISDICTION. PROVIDE TEMPORARY SEATS TO FACILITATE SAFE ERECTION.

4. THE FABRICATOR SHALL PREPARE THE SHOP DRAWINGS BASED ON DESIGN LOADS PROVIDED OR CONNECTION DESIGN INFORMATION SHOWN IN THE TYPICAL DETAILS. THE FABRICATOR IS RESPONSIBLE FOR CHOOSING, DESIGNING AND DETAILING ALL CONNECTIONS PARTIALLY DETAILED IN THE CONTRACT DRAWINGS IN ACCORDANCE WITH PART 10 OF THE AISC "MANUAL OF STEEL CONSTRUCTION" THIRTEENTH EDITION.

5. IF THE FABRICATOR USES ALTERNATE CONNECTION DESIGNS, A PROFESSIONAL ENGINEER REGISTERED IN THE STATE OF CONSTRUCTION SHALL SEAL AND SIGN THE CONNECTION DESIGNS AND SUBMIT WITH THE SHOP DRAWINGS.

6. PERFORM WELDING IN ACCORDANCE WITH THE AMERICAN WELDING SOCIETY STANDARD D1.1. PROVIDE ELECTRODES FOR SHOP AND FIELD WELDS IN ACCORDANCE WITH AWS A5.1 OR AWS A5.5, CLASS E70XX, LOW HYDROGEN. ALL WELDS SHALL USE FILLER METAL WITH A MINIMUM CVN VALUE OF 20 FT-LBS AT -20 DEGREES FAHRENHEIT.

7. ALL SHOP AND FIELD WELDING SHALL BE EXECUTED BY WELDERS AND WELDING OPERATORS WHO HAVE BEEN PREVIOUSLY QUALIFIED BY TEST AS PRESCRIBED IN AWS D1.1 OF THE AMERICAN WELDING SOCIETY TO PERFORM THE TYPES OF WELDS REQUIRED ON THE PROJECT.

8. SHOP OR FIELD WELDS AT NON-BOLTED CONNECTIONS THAT ARE NOT SPECIFICALLY DETAILED SHALL BE 3/16" CONTINUOUS FILLETS AT EACH CONTACT EDGE OR SURFACE.

9. RETURN ALL WELDS AT CORNERS TWICE THE NOMINAL SIZE OF THE WELD MINIMUM, UNLESS OTHERWISE NOTED.

10. ALL COPES, BLOCKS, CUT-OUTS, AND OTHER CUTTING OF STRUCTURAL MEMBERS SHALL HAVE ALL RE-ENTRANT CORNERS SHAPED, NOTCHED FREE TO A RADIUS OF AT LEAST ½".

11. SEE ARCHITECTURAL AND OTHER ENGINEERING DRAWINGS FOR MISCELLANEOUS STEEL NOT SHOWN ON THE STRUCTURAL DRAWINGS.

12. NO FABRICATION SHALL PROCEED PRIOR TO SHOP DRAWING APPROVAL.

13. NO OPENINGS IN BEAMS OR COLUMNS ARE PERMITTED WITHOUT STRUCTURAL ENGINEER'S WRITTEN APPROVAL.

14. SPLICING OF STRUCTURAL STEEL MEMBERS WHERE NOT DETAILED ON THE CONTRACT DOCUMENTS IS PROHIBITED WITHOUT PRIOR APPROVAL OF THE STRUCTURAL ENGINEER AS TO LOCATION, TYPE OF SPLICE AND CONNECTION TO BE MADE.

15. THE CONTRACTOR SHALL NOTIFY THE ENGINEER OF RECORD OF ANY MISFABRICATION STRUCTURAL STEEL PRIOR TO ERECTION OF SAME.

16. WHERE NO UPWARD CAMBER IS SHOWN ON THE CONTRACT DOCUMENTS, ANY MILL CAMBER SHALL BE DETAILED UPWARD IN THE BEAMS.

17. ONE 1.5 MIL COAT OF SHOP PAINT SHALL BE APPLIED TO ALL STRUCTURAL STEEL WITH THE EXCEPTION OF AREAS TO BE WELDED.

18. STRUCTURAL STEEL CAST INTO OR IN CONTACT WITH CONCRETE SHALL NOT BE PAINTED.

19. STEEL SHALL BE HOT DIPPED GALVANIZED WHERE INDICATED. STEEL SHAPES, PLATES AND BARS SHALL BE GALVANIZED PER ASTM A123. STEEL BOLTS, NUTS AND WASHERS SHALL BE GALVANIZED PER ASTM A153, CLASS C.

20. PROVIDE STANDARD AISC ANGLE WALL ANCHORS FOR STEEL BEAMS SUPPORTED IN MASONRY POCKETS.

SYM	DESCRIPTION	DATE	APPR

NAVFAC

COMMONWEALTH OF VIRGINIA
SCOTT M. FRANCIS
Lic. No. 039500
3/18/16
PROFESSIONAL ENGINEER
SEAL

Wiley|Wilson | BURNS McDONNELL
JOINT VENTURE

A/E INFO.

APPROVED
FOR COMMANDER NAVFAC / B.L.T.L.

ACTIVITY

SATISFACTORY TO DATE
DES SMF | DRW SMF | CHK MV

PROJECT MANAGER
IPT TECH. BRANCH HEAD
CHIEF ENG/ARCH

DEPARTMENT OF THE NAVY
NAVAL FACILITIES ENGINEERING COMMAND
WEBSTER FIELD, NAS PATUXENT RIVER

NAVAL FACILITIES ENGINEERING COMMAND – WASHINGTON
ST. INIGOES, MD

NAVAL AIR STATION PATUXENT RIVER
ST. INIGOES, MD

BUILDING 8008 REPAIRS, ALTERATIONS AND ADDITION

GENERAL NOTES

SCALE: AS NOTED
EPROJECT NO. 1183080
CONSTR. CONTR. NO. N40080-15-D-0452
NAVFAC DRAWING NO. 13078313
SHEET 29 OF 180
S-002

DRAWFORM REVISION: 10 MAY 2014

FILE NAME: C:\Users\Public\Documents\Revit 2015\215135R15_S_CEN_sfrancis.rvt
REVDATE: 3/17/2016 1:19:56 PM

H. STRUCTURAL COLD-FORMED STEEL

1. ALL GALVANIZED STUDS AND JOISTS 16 GAGE AND HEAVIER SHALL BE FORMED FROM STEEL THAT CONFORMS TO THE REQUIREMENTS OF ASTM A1003, GRADE ST50H, WITH A MINIMUM YIELD STRENGTH OF 50,000 PSI. ALL 18 GAGE STUDS SHALL CONFORM TO ASTM A1003 GRADE ST33H, WITH A MINIMUM YIELD STRENGTH OF 33,000 PSI.
2. ALL GALVANIZED TRACK, BRIDGING, END CLOSURES AND ACCESSORIES SHALL BE FORMED FROM STEEL THAT CONFORMS TO THE REQUIREMENTS OF ASTM A1003, GRADE ST33H, WITH A MINIMUM YIELD STRENGTH OF 33,000 PSI.
3. ALL GALVANIZED STUDS AND ACCESSORIES SHALL BE FORMED FROM STEEL HAVING A GALVANIZED COATING WHICH CONFORMS TO ASTM A525 G-60.
4. ALL FRAMING MEMBERS SHALL BE OF THE TYPE AND SIZE AS SHOWN ON THE PLANS.
5. ANY SUBSTITUTIONS MUST BE APPROVED BY THE STRUCTURAL ENGINEER OF RECORD.
6. WELDING SHALL CONFORM TO AWS D1.1, AWS D1.3 AND AISI MANUAL SECTION 4.2.
7. WELDING SHALL BE BY FUSION WELDING UTILIZING ELECTRODES WITH ASTM CLASSIFICATION E60. ALL WELDERS SHALL BE QUALIFIED BY TESTING IN ACCORDANCE WITH THE "CODE FOR WELDING IN BUILDING CONSTRUCTION", AWS D.1, 1-81 OF THE AMERICAN WELDING SOCIETY.
8. BOLTING AND SELF DRILLING/SELF TAPPING SCREWS MAY BE EMPLOYED. THE CONTRACTOR SHALL SUBMIT MECHANICAL FASTENER DATA FOR REVIEW AND APPROVAL BY THE STRUCTURAL ENGINEER.
9. STUD MEMBERS MAY BE PUNCHED. JOIST AND HEADER MEMBERS SHALL NOT BE PUNCHED.
10. STUD AND TRACK SIZES SHALL BE AS INDICATED ON THE DRAWINGS. TRACK SHALL BE 18 GAGE UNLESS OTHERWISE NOTED.
11. MILL CERTIFICATION OF THE STEEL PROPERTIES SHALL BE REQUIRED. ALL STEEL SHALL BE OF DOMESTIC MANUFACTURE.
12. PRIOR TO PREFABRICATION OF FRAMING, THE CONTRACTOR SHALL SUBMIT FABRICATION AND ERECTION DRAWINGS TO THE ARCHITECT AND/OR STRUCTURAL ENGINEER FOR REVIEW.
13. FRAMING COMPONENTS MAY BE PRE-ASSEMBLED INTO PANELS PRIOR TO ERECTING. PREFABRICATED PANELS SHALL BE SQUARE WITH COMPONENTS AND ATTACHED IN A MANNER AS TO PREVENT RACKING.
14. ALL FRAMING COMPONENTS SHALL BE CUT SQUARELY FOR ATTACHMENT TO PERPENDICULAR MEMBERS, OR AS REQUIRED FOR AN ANGULAR FIT AGAINST ABUTTING MEMBER. MEMBERS SHALL BE HELD POSITIVELY IN PLACE UNTIL PROPERLY FASTENED.
15. AXIALLY LOADED STUDS SHALL BE INSTALLED IN A MANNER WHICH WILL ASSURE THAT ENDS OF THE STUDS ARE POSITIONED AGAINST THE INSIDE TRACK WEB, PRIOR TO STUD AND TRACK ATTACHMENT.
16. WIRE TYING SHALL NOT BE PERMITTED.
17. ALL LOAD BEARING PANELS AND HEADER MEMBERS WITH STIFFENERS SHALL BE PRE-LOADED WITH CLAMPING DEVICE TO INSURE FULL BEARING BETWEEN STUDS AND TRACKS. HEADERS SHALL BE REVIEWED BY THE STRUCTURAL ENGINEER OR AUTHORIZED REPRESENTATIVE PRIOR TO INSTALLATION.
18. METAL STUD ERECTOR IS RESPONSIBLE FOR INSTALLING WIND BRACING WHERE INDICATED ON THE PLANS.
19. COLD FORMED HEADERS SHALL HAVE STIFFENERS COMPRISED OF 14 GAGE TRACK PLACED VERTICALLY BETWEEN THE FLANGES. CONNECTION BETWEEN THE 2 MEMBERS COMPRISING THE LINTEL, END SPACERS AND STIFFENERS SHALL BE WELDED OR SCREWED AT FIFTH POINTS.
20. STUDS SHALL BE ATTACHED TO TRACK ON TWO SIDES.
21. AT BUILT-UP STUD LOCATIONS, STUDS SHALL BE WELDED TOGETHER AT QUARTER POINTS OR 36" MAXIMUM ON CENTER.
22. BEARING WALLS SHALL HAVE TWO ROWS OF HORIZONTAL BRIDGING THREADED THROUGH THE PUNCHED STUDS AT THIRD POINTS.
23. METAL STUD ERECTOR SHALL BE RESPONSIBLE FOR LOCATION AND ATTACHING CONNECTION PLATES TO HOT ROLLED STEEL SECTIONS.
24. HEADER WITH INTERIOR STIFFENERS SHALL HAVE INDIVIDUAL STIFFENERS INSPECTED PRIOR TO ASSEMBLING THE TWO JOIST MEMBERS.
25. AT TRACK BUTT JOINTS, ABUTTING PIECES OF TRACK SHALL BE SECURELY ANCHORED TO A COMMON STRUCTURAL ELEMENT, OR THEY SHALL BE BUTT-WELDED OR SPLICED TOGETHER.
26. STUDS SHALL BE PLUMBED, ALIGNED AND SECURELY ATTACHED TO THE FLANGE OR WEBS OF BOTH UPPER AND LOWER TRACKS.
27. WALL STUD BRIDGING SHALL BE ATTACHED IN A MANNER TO PREVENT STUD ROTATION. BRIDGING ROWS SHALL BE SPACED AT 48" ON CENTER MAXIMUM AND BRIDGING SHALL BE 16 GAGE, 1-1/2" WIDE WITH 9/16" FLANGES.
28. SPLICES IN AXIALLY LOADED STUDS SHALL NOT BE PERMITTED.
29. WINDOW SILLS SHALL BE THE SAME SIZE AND GAGE AS THE OTHER MEMBERS DESIGNATED IN THE WALL PANEL UNLESS OTHERWISE NOTED.

J. COLD FORMED STEEL TRUSSES

1. SUBMIT CALCULATIONS AND SHOP DRAWINGS SIGNED AND SEALED BY A SPECIALTY ENGINEER REGISTERED IN THE STATE OF THE PROJECT. MEMBERS AND CONNECTIONS SHALL BE DESIGNED FOR THE LOADINGS NOTED ABOVE. ANY SIZES NOTED IN THE DRAWINGS ARE FOR GENERAL INFORMATIONAL PURPOSES ONLY.
2. MAXIMUM TRUSS DEFLECTION SHALL BE L/240 FOR ROOF LIVE LOADS.
3. ALONG PERIMETER WALLS AND AT INTERIOR BEARING WALLS, DESIGN AND PROVIDE APPROPRIATE BLOCKING AND/OR BRIDGING NECESSARY TO TRANSFER A SHEAR LOAD OF 530 PLF FROM THE ROOF DIAPHRAGM DOWN TO THE TOP TRACK OF THE SUPPORTING WALL OR BEAM.

K. ROOF DECK

1. ROOF DECK SHALL BE TYPE B ROOF DECK. TYPE B DECK SHALL BE 22 GAGE COLD FORMED STEEL CONFORMING TO ASTM A653 SQ GRADE 33, COATING DESIGNATION G60 FOR GALVANIZED DECK. METAL DECK SHALL BE 1-1/2 INCHES DEEP WITH A MINIMUM SECTION MODULUS (SP) OF 0.186 INCHES CUBED PER FOOT OF WIDTH.
2. CONTRACTOR SHALL PROVIDE MATERIALS, DESIGN AND INSTALLATION OF DECK FOR THE REQUIREMENTS OF STEEL DECK INSTITUTE'S "DESIGN MANUAL FOR COMPOSITE DECKS, FORM DECKS AND ROOF DECKS." DECK PROPERTIES SHALL BE COMPUTED USING THE LATEST EDITION OF AISI SPECIFICATIONS FOR THE "DESIGN OF COLD-FORMED STEEL STRUCTURAL MEMBERS."
3. STEEL DECK SHALL BE INSTALLED CONTINUOUS OVER 3 SPANS MINIMUM (UNLESS OTHERWISE NOTED) AND SHALL BEAR AT LEAST 2 INCHES ON STEEL SUPPORTS.
4. THE CONTRACTOR SHALL PROVIDE SUPPLEMENTAL FRAMING L4 X 4 X 3/8 AS NECESSARY FOR THE SUPPORT OF METAL DECK WHERE NOT SHOWN ON DRAWINGS UNLESS OTHERWISE INDICATED.
5. METAL FORMS FOR ROOF DECK SHALL BE VENTED, PROVIDING AN OPEN AREA OF AT LEAST 1.5 PERCENT. VENTING SHALL BE ACCOMPLISHED BY A SERIES OF OUTLET SLOTS IN THE INTERIOR VALLEYS OF THE CORRUGATED SECTIONS.

L. POST-INSTALLED ANCHORS

1. POST-INSTALLED ANCHORS SHALL ONLY BE USED WHERE SPECIFIED ON THE CONSTRUCTION DOCUMENTS.
2. THE CONTRACTOR SHALL OBTAIN APPROVAL FROM THE ENGINEER-OF-RECORD PRIOR TO INSTALLING POST-INSTALLED ANCHORS IN PLACE OF MISSING OR MISPLACED CAST-IN-PLACE ANCHORS.
3. ANCHORAGE TO CONCRETE:
   a. MECHANICAL ANCHORS SHALL HAVE BEEN TESTED AND QUALIFIED FOR USE IN ACCORDANCE WITH ACI 355.2 AND ICC-ES AC193 FOR CRACKED AND UNCRACKED CONCRETE RECOGNITION.
   b. ADHESIVE ANCHORS SHALL HAVE BEEN TESTED AND QUALIFIED FOR USE IN ACCORDANCE WITH ACE 355.4 AND ICC-ES AC 308 FOR CRACKED AND UNCRACKED CONCRETE RECOGNITION.
4. ANCHORAGE TO SOLID-GROUTED CONCRETE MASONRY:
   a. MECHANICAL ANCHORS SHALL HAVE BEEN TESTED AND QUALIFIED FOR USE IN ACCORDANCE WITH ICC-ES AC01 OR AC106.
   b. ADHESIVE ANCHORS SHALL HAVE BEEN TESTED AND QUALIFIED FOR USE IN ACCORDANCE WITH ICC-ES AC58.
5. ANCHORAGE TO HOLLOW CONCRETE MASONRY / UNREINFORCED CLAY BRICK MASONRY:
   a. ADHESIVE ANCHORS WITH SCREEN TUBES SHALL BE TESTED AND QUALIFIED IN ACCORDANCE WITH ICC-ES AC58 OR AC60, AS APPROPRIATE. THE APPROPRIATE SCREEN TUBE SHALL BE USED AS RECOMMENDED BY THE ADHESIVE MANUFACTURER.
6. INSTALL ANCHORS PER THE MANUFACTURER INSTRUCTIONS, AS INCLUDED IN THE ANCHOR PACKAGING.
7. ANCHOR CAPACITY IS DEPENDANT UPON SPACING BETWEEN ADJACENT ANCHORS AND PROXIMITY OF ANCHORS TO EDGE OF CONCRETE. INSTALL ANCHORS IN ACCORDANCE WITH SPACING AND EDGE CLEARANCES INDICATED ON THE DRAWINGS.
8. EXISTING REINFORCING BARS IN THE CONCRETE STRUCTURE MAY CONFLICT WITH SPECIFIC ANCHOR LOCATIONS. UNLESS NOTED ON THE DRAWINGS THAT THE BARS CAN BE CUT, THE CONTRACTOR SHALL REVIEW THE EXISTING STRUCTURAL DRAWINGS AND SHALL UNDERTAKE TO LOCATE THE POSITION OF THE REINFORCING BARS AT THE LOCATIONS OF THE CONCRETE ANCHORS.

SYM	DESCRIPTION	DATE	APPR

NAVFAC

COMMONWEALTH OF VIRGINIA
SCOTT M. FRANCIS
Lic. No. 039500
3/18/16
PROFESSIONAL ENGINEER
SEAL

Wiley|Wilson | BURNS McDONNELL
JOINT VENTURE
A/E INFO

APPROVED
FOR COMMANDER NAVFAC / B.L.T.L

ACTIVITY

SATISFACTORY TO DATE

DES SMF	DRW SMF	CHK MV

PROJECT MANAGER
IPT TECH. BRANCH HEAD
CHIEF ENG/ARCH

DEPARTMENT OF THE NAVY
NAVAL FACILITIES ENGINEERING COMMAND
WEBSTER FIELD, NAS PATUXENT RIVER

NAVAL FACILITIES ENGINEERING COMMAND ~ WASHINGTON
ST. INIGOES, MD

NAVAL AIR STATION PATUXENT RIVER
ST. INIGOES, MD

BUILDING 8008 REPAIRS, ALTERATIONS AND ADDITION

GENERAL NOTES

SCALE: AS NOTED
EPROJECT NO. 1183080
CONSTR. CONTR. NO. N40080-15-D-0452
NAVFAC DRAWING NO. 13078314
SHEET 30 OF 180
S-003

DRAWFORM REVISION: 10 MAY 2014

FILE NAME: C:\Users\Public\Documents\Revit 2015\215135R15_S_CEN_sfrancis.rvt
REVDATE: 3/17/2016 1:19:57 PM

#	POUNDS OR NUMBER
%	PERCENT
&	AND
@	AT
AA	ALUMINUM ASSOCIATION
AB	ANCHOR BOLT
ABT	ABOUT
ACI	AMERICAN CONCRETE INSTITUTE
ADH	ADHESIVE
AGGR	AGGREGATE
AHR	ANCHOR
AISI	AMERICAN IRON AND STEEL INSTITUTE
AL	ALUMINUM
ALTN	ALTERNATE
ANSI	AMERICAN NATIONAL STANDARDS INSTITUTE
APPROX	APPROXIMATE
ARCH	ARCHITECT
ASTM	AMERICAN SOCIETY FOR TESTING OF MATERIALS
AWS	AMERICAN WELDING SOCIETY
B/P	BASE OF PIER
BC	BOLT CIRCLE
BETW	BETWEEN
BLDG	BUILDING
BM	BEAM
BO	BOTTOM OF
BOS	BOTTOM OF STEEL
BOT	BOTTOM
BRG	BEARING
BRKT	BRACKET
C/C	CENTER TO CENTER
CAP	CAPACITY
CFS	COLD FORMED STEEL
CHKR	CHECKER
CIR	CIRCLE
CJ	CONSTRUCTION JOINT
CL	CENTER LINE
CLJ	CONTROL JOINT
CLR	CLEAR
CMU	CONCRETE MASONRY UNIT
CO	CONCRETE OPENING
COL	COLUMN
COMP	COMPRESSION
CONC	CONCRETE
CONN	CONNECTION
CONT	CONTINUOUS
CONTR	CONTRACT
COORD	COORDINATE
COR	CORNER
COTR	CONTRACTING OFFICER
CRSI	CONCRETE REINFORCING STEEL INSTITUTE
CTR	CENTER
CTRD	CENTERED
CY	CUBIC YARD
DBL	DOUBLE
DET	DETAIL
DIA	DIAMETER
DIAG	DIAGONAL
DIM	DIMENSION
DK	DECKING
DL	DEAD LOAD
DN	DOWN
DWG	DRAWING
DWL	DOWEL
E	EAST
EA	EACH
ED	EQUIPMENT DRAIN
EF	EACH FACE
EJ	EXPANSION JOINT
EL	ELEVATION
ELEC	ELECTRICAL
ELEV	ELEVATOR
EMBED	EMBEDMENT
EQ	EQUAL
EQ SP	EQUALLY SPACED
EQUIP	EQUIPMENT
EQUIV	EQUIVALENT
EW	EACH WAY
EXIST	EXISTING
EXP	EXPANSION
EXT	EXTERIOR
FAB	FABRICATE
FD	FLOOR DRAIN
FDN	FOUNDATION
FF	FAR FACE
FL	FLOOR
FLG	FLANGE
FNSH	FINISH
FS	FAR SIDE
FT	FEET
FUT	FUTURE
GA	GAGE
GALV	GALVANIZE
GB	GRADE BEAM
GHSE	GREENHOUSE
GND	GROUND
GR	GRADE
GRTG	GRATING
H	SLAB THICKNESS
HDHSE	HEADHOUSE
HEF	HORIZONTAL EACH FACE
HEX	HEXAGON
HG	HIGH
HH	HEADHOUSE
HK	HOOK
HORIZ	HORIZONTAL
HPT	HIGH POINT
HR	HAND RAIL
HS	HIGH STRENGTH
IBC	INTERNATIONAL BUILDING CODE
ID	INSIDE DIAMETER
IF	INSIDE FACE
IJ	ISOLATION JOINT
IN	INCHES
INTR	INTERIOR
INVT	INVERT
IR	INSIDE RADIUS
JT	JOINT
KB	KNEE BRACE
KPL	KICK PLATE
KSI	KIPS PER SQUARE INCH
L	ANGLE
LAD	LADDER
LB	POUND
LD	DEVELOPMENT LENGTH
LG	LONG
LL	LIVE LOAD
LLH	LONG LEG HORIZONTAL
LLO	LONG LEG OUTSTANDING
LLV	LONG LEG VERTICAL
LNTL	LINTEL
LONG	LONGITUDINAL
LPT	LOW POINT
LS	LAP SPLICE
LVL	LEVEL
MATL	MATERIAL
MAX	MAXIMUM
MC	MOMENT CONNECTION
MECH	MECHANICAL
MEZZ	MEZZANINE
MFR	MANUFACTURER
MH	MANHOLE
MIN	MINIMUM
MISC	MISCELLANEOUS
MK	MARK
MO	MASONRY OPENING
N	NORTH
NA	NOT APPLICABLE
NE	NORTHEAST
NF	NEAR FACE
NIC	NOT IN CONTRACT
NO	NUMBER
NOM	NOMINAL
NS	NEAR SIDE
NTS	NOT TO SCALE
NW	NORTHWEST
OC	ON CENTER
OD	OUTSIDE DIAMETER
OF	OUTSIDE FACE
OPNG	OPENING
OPP	OPPOSITE
OSHA	OCCUPATIONAL SAFETY AND HEALTH ADMINISTRATION
OZ	OUNCE
PCF	POUNDS PER CUBIC FOOT
PED	PEDESTAL
PEMP	PRE-ENGINEERED METAL BUILDING
PEN	PENETRATE
PERIM	PERIMETER
PERP	PERPENDICULAR
PJNT	PROJECTION
PL	PLATE
PLC	PLACES
PREFAB	PREFABRICATED
PS	PIPE SUPPORT
PSF	POUNDS PER SQUARE FOOT
PSI	POUNDS PER SQUARE INCH
PVC	POLYVINYL CHLORIDE
R	RISER
RAD	RADIUS
RD	ROOF DRAIN
REF	REFERENCE
REINF	REINFORCE
REQD	REQUIRED
REV	REVISION
RM	ROOM
S	SOUTH
SB	SHEAR BAR
SCHED	SCHEDULE
SE	SOUTHEAST
SECT	SECTION
SF	SWAY FRAME
SH	SHEET
SIM	SIMILAR
SLO	SHORT LEG OUTSTANDING
SLP	SLOPE
SLV	SLEEVE
SP	SPACE
SPEC	SPECIFICATION
SQ	SQUARE
SST	STAINLESS STEEL
STD	STANDARD
STIF	STIFFENER
STIR	STIRRUP
STL	STEEL
STR	STRAIGHT
STRL	STRUCTURAL
STRUC	STRUCTURAL
SW	SOUTHWEST
SYMM	SYMMETRICAL
T	TON
T&B	TOP AND BOTTOM
T/	TOP OF
T/C OR TOC	TOP OF CONCRETE
T/P	TOP OF PIER
T/STL OR TOS	TOP OF STEEL
TEMP	TEMPORARY
THD	THREAD
THK	THICK
THRU	THROUGH
TOB	TOP OF BOLT
TOG	TOP OF GRATING
TOS OR T/S	TOP OF STEEL
TRD	TREAD
TYP	TYPICAL
UNO	UNLESS NOTED OTHERWISE
VAR	VARIES
VEF	VERTICAL EACH FACE
VERT	VERTICAL
W	WEST
W/	WITH
W/O	WITHOUT
WD	WIDE
WDT	WIDTH
WP	WORK POINT
WS	WATERSTOP
WT	WEIGHT
WWF	WELDED WIRE FABRIC

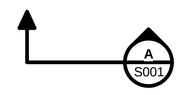

SECTION CALLOUT EXAMPLE

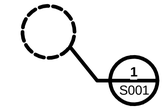

DETAIL CALLOUT EXAMPLE

ELEVATION CALLOUT EXAMPLE

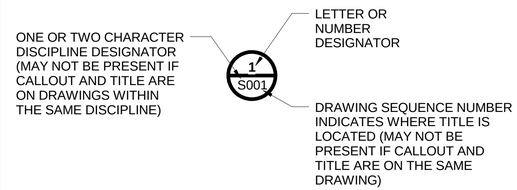

SECTION, DETAIL, AND ELEVATION SYMBOL IDENTIFIERS

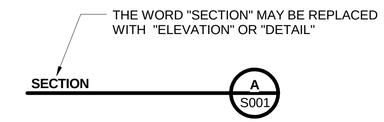

SECTION, DETAIL, OR ELEVATION TITLE EXAMPLE

SECTION, DETAIL, AND ELEVATION IDENTIFICATION SYSTEM

SYM	DESCRIPTION	DATE	APPR

NAVFAC

COMMONWEALTH OF VIRGINIA
SCOTT M. FRANCIS
Lic. No. 039500
3/18/16
PROFESSIONAL ENGINEER
SEAL

Wiley|Wilson | BURNS McDONNELL
JOINT VENTURE

A/E INFO

APPROVED
FOR COMMANDER NAVFAC / B.L.T.L

ACTIVITY

SATISFACTORY TO DATE

DES	DRW	CHK
SMF	SMF	MV

PROJECT MANAGER
IPT TECH. BRANCH HEAD
CHIEF ENG/ARCH

DEPARTMENT OF THE NAVY
NAVAL FACILITIES ENGINEERING COMMAND
WEBSTER FIELD, NAS PATUXENT RIVER

NAVAL FACILITIES ENGINEERING COMMAND ~ WASHINGTON
ST. INIGOES, MD

NAVAL AIR STATION PATUXENT RIVER
ST. INIGOES, MD

BUILDING 8008 REPAIRS, ALTERATIONS AND ADDITION

LEGEND & ABBREVIATIONS

SCALE: AS NOTED
EPROJECT NO. 1183080
CONSTR. CONTR. NO. N40080-15-D-0452
NAVFAC DRAWING NO. 13078315
SHEET 31 OF 180
S-004

DRAWFORM REVISION: 10 MAY 2014

FILE NAME: C:\Users\Public\Documents\Revit 2015\215135R15_S_CEN_sfrancis.rvt
REV/DATE: 3/17/2016 1:19:58 PM

FOUNDATION PLAN NOTES:

1. TOP OF SLAB ELEVATION = 100.00' REFERENCE (ACTUAL = +8.50') TYPICAL UNLESS NOTED OTHERWISE.

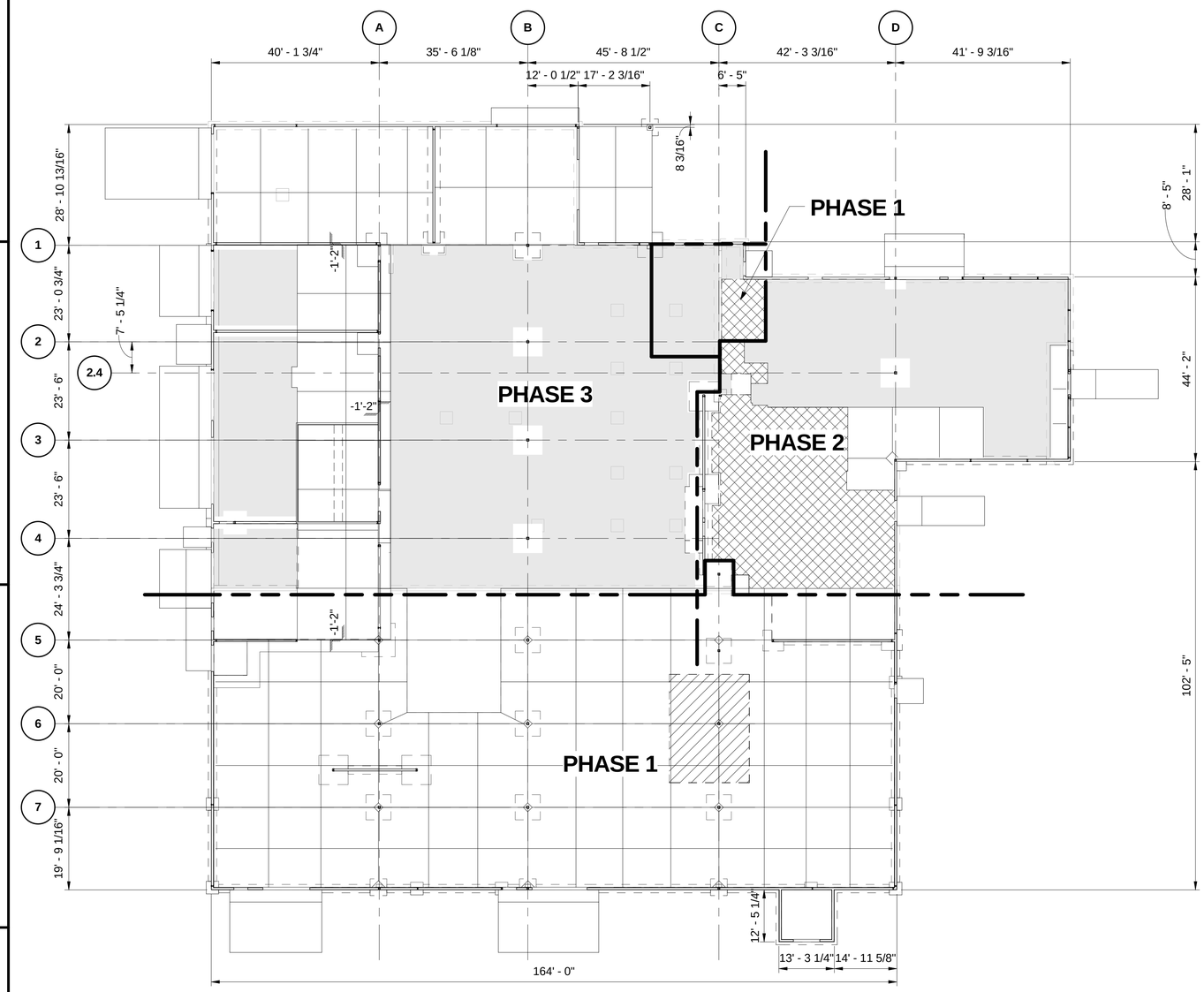

FOUNDATION PLAN - OVERALL
SCALE: 1/16" = 1'-0"

KEY PLAN:

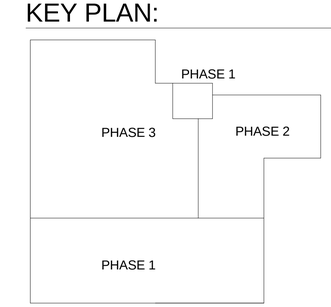

GRAPHIC SCALE:

1/16" =1'-0" 0' 8' 16' 32'

SYM	DESCRIPTION	DATE	APPR

NAVFAC

COMMONWEALTH OF VIRGINIA
SCOTT M. FRANCIS
Lic. No. 039500
3/18/16
PROFESSIONAL ENGINEER
SEAL

Wiley|Wilson | BURNS McDONNELL
JOINT VENTURE
A/E INFO.

APPROVED
FOR COMMANDER NAVFAC / B.L.T.L.
ACTIVITY
SATISFACTORY TO DATE
DES. SMF DRW SMF CHK MV
PROJECT MANAGER
IPT TECH. BRANCH HEAD
CHIEF ENG/ARCH

DEPARTMENT OF THE NAVY
NAVAL FACILITIES ENGINEERING COMMAND
WEBSTER FIELD, NAS PATUXENT RIVER
NAVAL FACILITIES ENGINEERING COMMAND ~ WASHINGTON
ST. INIGOES, MD
NAVAL AIR STATION PATUXENT RIVER
ST. INIGOES, MD
BUILDING 8008 REPAIRS, ALTERATIONS AND ADDITION
FOUNDATION PLAN - OVERALL

SCALE: AS NOTED
EPROJECT NO. 1183080
CONSTR. CONTR. NO. N40080-15-D-0452
NAVFAC DRAWING NO. 13078316
SHEET 32 OF 180
S-101

DRAWFORM REVISION: 10 MAY 2014

FILE NAME: C:\Users\Public\Documents\Revit 2015\215135R15_S_CEN_sfrancis.rvt
REV/DATE: 3/17/2016 1:19:59 PM

FOOTING SCHEDULE					
COLUMN DESIGNATION	WIDTH	LENGTH	THICKNESS	BOTTOM REINFORCING	REMARKS
F3.0	3' - 0"	3' - 0"	1' - 0"	(3) #5 EW	TOP & BOTT
F4.0	4' - 0"	4' - 0"	1' - 0"	(4) #5 EW	
F5.0	5' - 0"	5' - 0"	1' - 0"	(5) #5 EW	TOP & BOTT
F6.0	6' - 0"	6' - 0"	1' - 6"	(6) #5 EW	
F7.0	7' - 0"	7' - 0"	1' - 6"	(7) #5 EW	TOP & BOTT
F8.0	8' - 0"	8' - 0"	1' - 6"	(8) #6 EW	

FOUNDATION PLAN NOTES:

1. TOP OF SLAB ELEVATION = 100.00' REFERENCE (ACTUAL = +8.50') TYPICAL UNLESS NOTED OTHERWISE.
2. DIMENSIONS ARE TO EXTERIOR FACE OF 6" CFS STUDS UNLESS NOTED OTHERWISE.

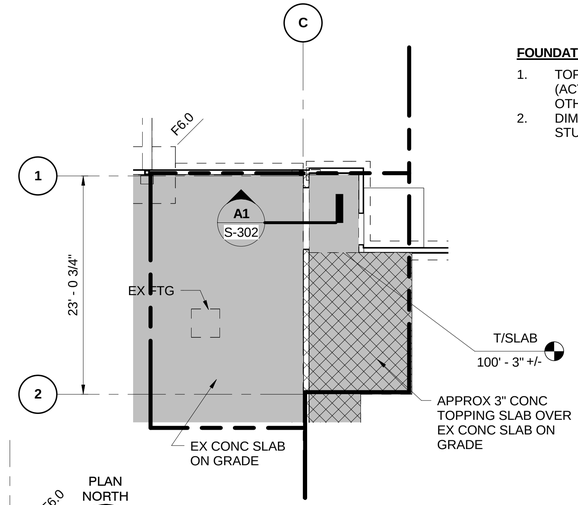

PLAN NORTH

FOUNDATION PLAN - PHASE 1

SCALE: 1/8" = 1'-0"

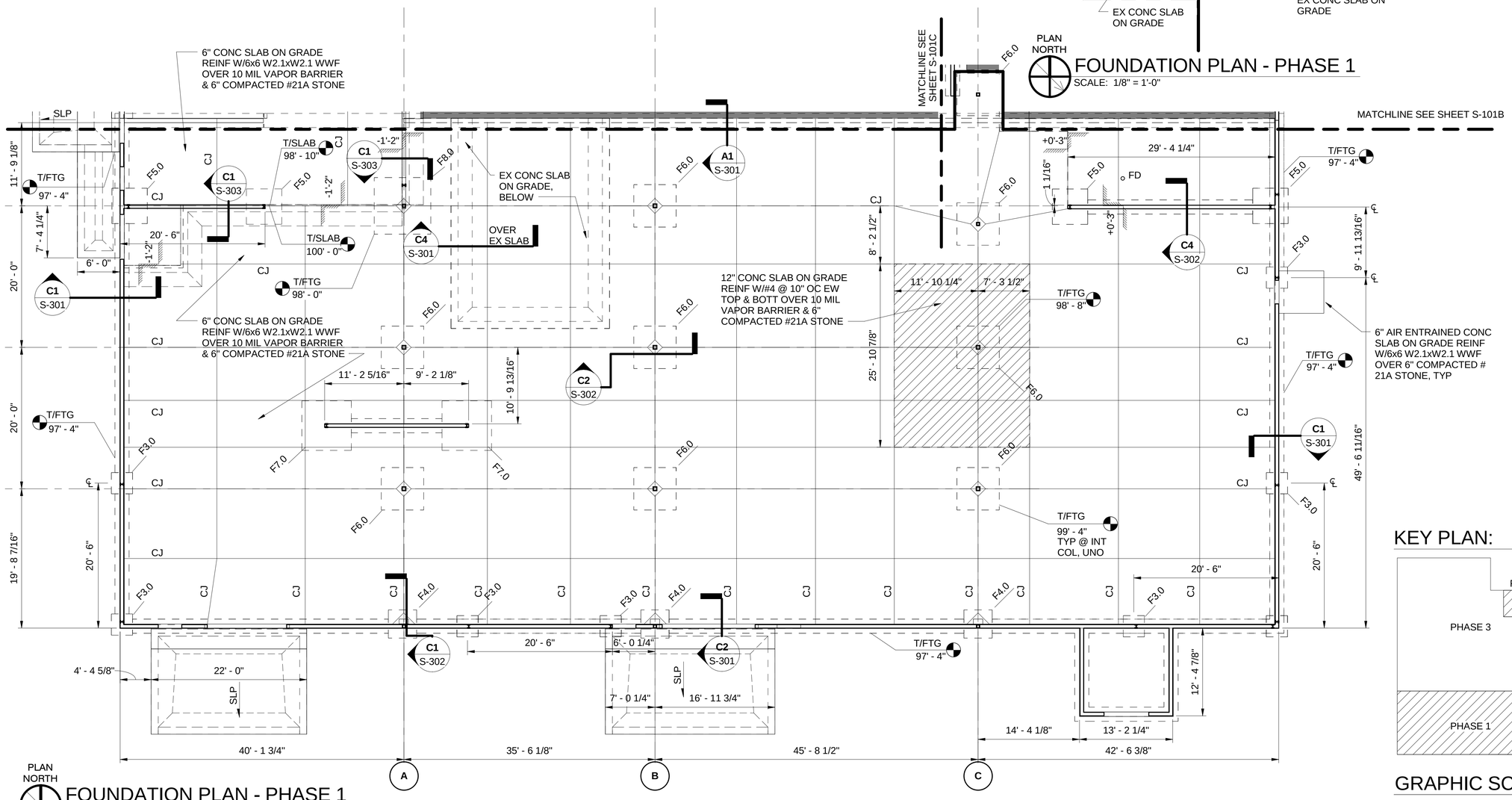

PLAN NORTH

FOUNDATION PLAN - PHASE 1

SCALE: 1/8" = 1'-0"

KEY PLAN:

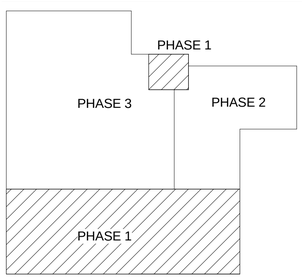

GRAPHIC SCALE:

1/8" =1'-0" 0' 4' 8' 16'

SYM	DESCRIPTION	DATE	APPR

NAVFAC

COMMONWEALTH OF VIRGINIA
SCOTT M. FRANCIS
Lic. No. 039500
3/18/16
PROFESSIONAL ENGINEER
SEAL

Wiley|Wilson | BURNS McDONNELL
JOINT VENTURE

A/E INFO.

APPROVED
FOR COMMANDER NAVFAC / B.L.T.L.

ACTIVITY

SATISFACTORY TO DATE
DES SMF DRW SMF CHK MV
PROJECT MANAGER
IPT TECH. BRANCH HEAD
CHIEF ENG/ARCH

DEPARTMENT OF THE NAVY
NAVAL FACILITIES ENGINEERING COMMAND
WEBSTER FIELD, NAS PATUXENT RIVER

NAVAL FACILITIES ENGINEERING COMMAND ~ WASHINGTON
ST. INIGOES, MD

NAVAL AIR STATION PATUXENT RIVER
ST. INIGOES, MD

BUILDING 8008 REPAIRS, ALTERATIONS AND ADDITION

FOUNDATION PLAN - PHASE 1

SCALE: AS NOTED
EPROJECT NO. 1183080
CONSTR. CONTR. NO. N40080-15-D-0452
NAVFAC DRAWING NO. 13078317
SHEET 33 OF 180
S-101A

DRAWFORM REVISION: 10 MAY 2014

FILE NAME: C:\Users\Public\Documents\Revit 2015\215135R15_S_CEN_sfrancis.rvt
REVDATE: 3/17/2016 1:20:01 PM

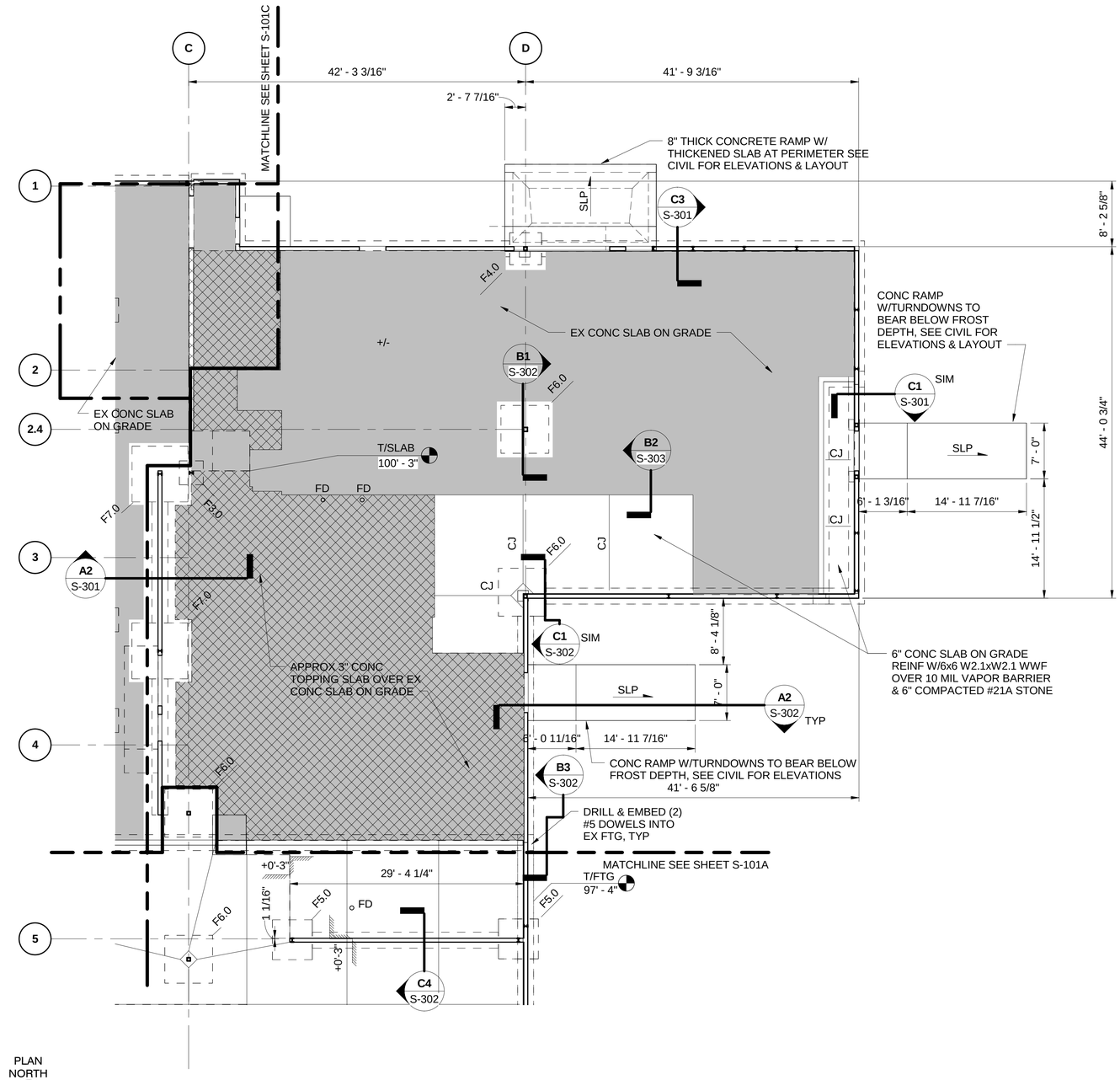

FOUNDATION PLAN - PHASE 2

SCALE: 1/8" = 1'-0"

FOUNDATION PLAN NOTES:

1. TOP OF SLAB ELEVATION = 100.00' REFERENCE (ACTUAL = +8.50') TYPICAL UNLESS NOTED OTHERWISE.
2. AT LOCATIONS WHERE NEW BELOW GRADE UTILITIES ARE TO BE INSTALLED BELOW EXISTING SLAB, SEE TYPICAL TRENCH SLAB DETAIL ON SHEET S-501.
3. DIMENSIONS ARE TO EXTERIOR FACE OF 6" CFS STUDS UNLESS NOTED OTHERWISE.

FOOTING SCHEDULE

COLUMN DESIGNATION	WIDTH	LENGTH	THICKNESS	BOTTOM REINFORCING	REMARKS
F3.0	3' - 0"	3' - 0"	1' - 0"	(3) #5 EW	TOP & BOTT
F4.0	4' - 0"	4' - 0"	1' - 0"	(4) #5 EW	
F5.0	5' - 0"	5' - 0"	1' - 0"	(5) #5 EW	TOP & BOTT
F6.0	6' - 0"	6' - 0"	1' - 6"	(6) #5 EW	
F7.0	7' - 0"	7' - 0"	1' - 6"	(7) #5 EW	TOP & BOTT
F8.0	8' - 0"	8' - 0"	1' - 6"	(8) #6 EW	

KEY PLAN:

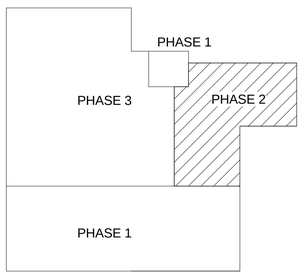

GRAPHIC SCALE:

1/8" =1'-0" 0' 4' 8' 16'

SYM	DESCRIPTION	DATE	APPR

NAVFAC

COMMONWEALTH OF VIRGINIA
SCOTT M. FRANCIS
Lic. No. 039500
3/18/16
PROFESSIONAL ENGINEER
SEAL

Wiley|Wilson | BURNS McDONNELL
JOINT VENTURE
A/E INFO

APPROVED
FOR COMMANDER NAVFAC / B.L.T.L

ACTIVITY

SATISFACTORY TO DATE

DES	SMF	DRW	SMF	CHK	MV

PROJECT MANAGER
IPT TECH. BRANCH HEAD
CHIEF ENG/ARCH

DEPARTMENT OF THE NAVY
NAVAL FACILITIES ENGINEERING COMMAND
WEBSTER FIELD, NAS PATUXENT RIVER

NAVAL FACILITIES ENGINEERING COMMAND ~ WASHINGTON
ST. INIGOES, MD

NAVAL AIR STATION PATUXENT RIVER
ST. INIGOES, MD

BUILDING 8008 REPAIRS, ALTERATIONS AND ADDITION

FOUNDATION PLAN - PHASE 2

SCALE: AS NOTED
EPROJECT NO. 1183080
CONSTR. CONTR. NO. N40080-15-D-0452
NAVFAC DRAWING NO. 13078318
SHEET 34 OF 180
S-101B

DRAWFORM REVISION: 10 MAY 2014

FILE NAME: C:\Users\Public\Documents\Revit 2015\215135R15_S_CEN_sfrancis.rvt
REVDATE: 3/17/2016 1:20:03 PM

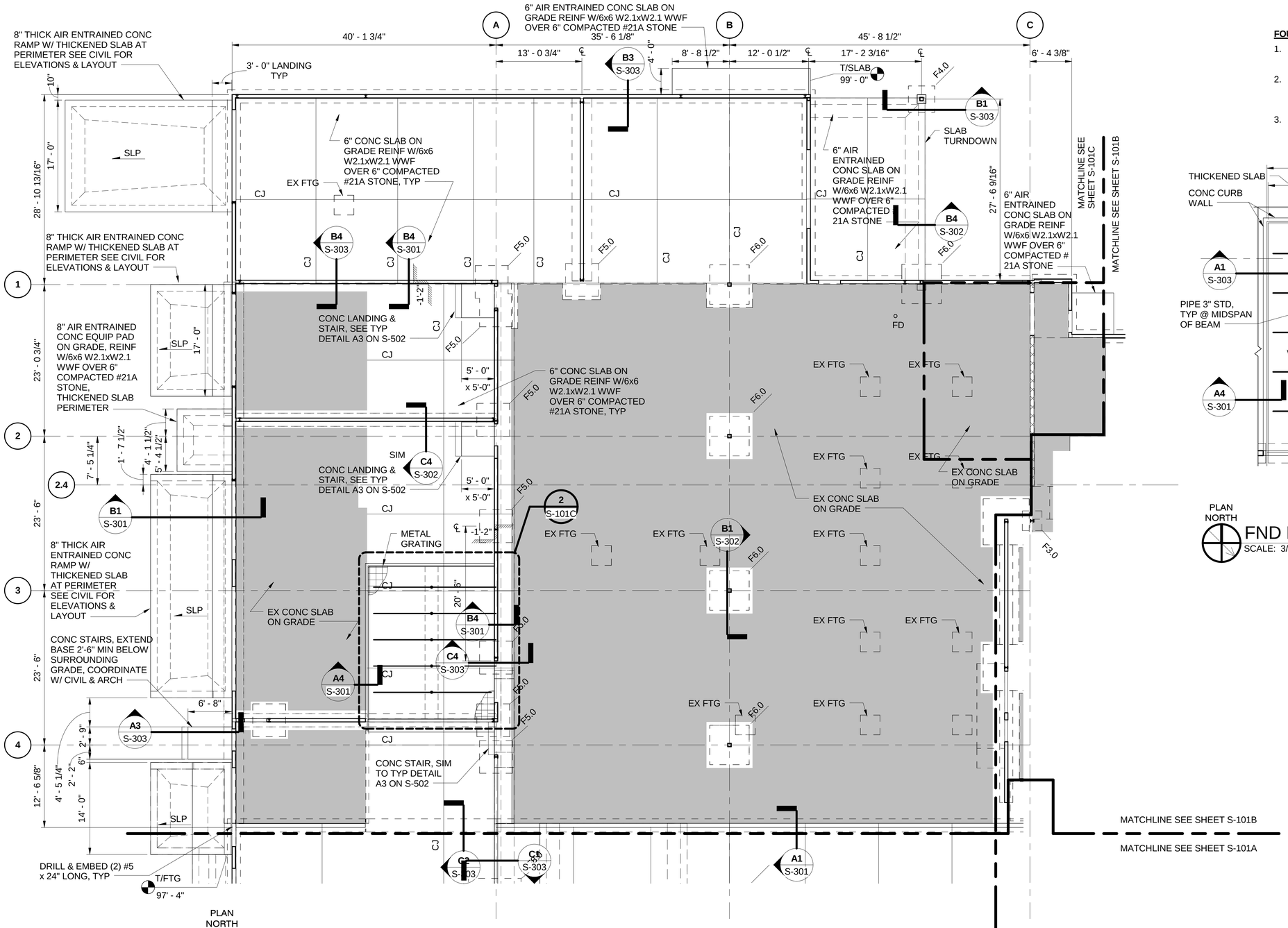

FOUNDATION PLAN - PHASE 3

SCALE: 1/8" = 1'-0"

FOUNDATION PLAN NOTES:

1. TOP OF SLAB ELEVATION = 100.00' REFERENCE (ACTUAL = +8.50') TYPICAL UNLESS NOTED OTHERWISE.
2. AT LOCATIONS WHERE NEW BELOW GRADE UTILITIES ARE TO BE INSTALLED BELOW EXISTING SLAB, SEE TYPICAL TRENCH SLAB DETAIL ON SHEET S-501.
3. DIMENSIONS ARE TO EXTERIOR FACE OF 6" MCFS STUDS UNLESS NOTED OTHERWISE.

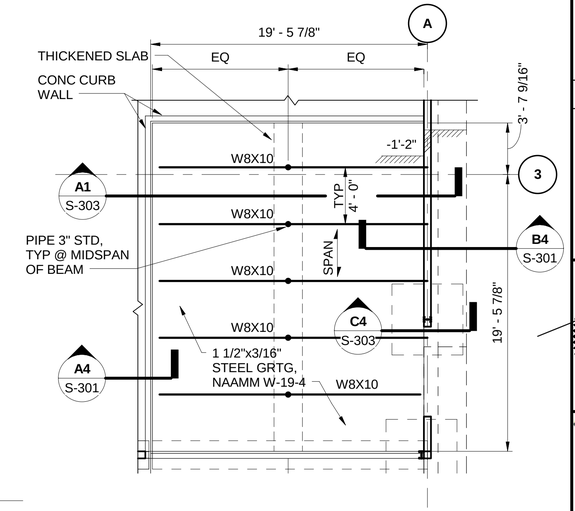

FND PLAN - CHEMICAL STORAGE

SCALE: 3/16" = 1'-0"

FOOTING SCHEDULE					
COLUMN DESIGNATION	WIDTH	LENGTH	THICKNESS	BOTTOM REINFORCING	REMARKS
F3.0	3' - 0"	3' - 0"	1' - 0"	(3) #5 EW	TOP & BOTT
F4.0	4' - 0"	4' - 0"	1' - 0"	(4) #5 EW	
F5.0	5' - 0"	5' - 0"	1' - 0"	(5) #5 EW	TOP & BOTT
F6.0	6' - 0"	6' - 0"	1' - 6"	(6) #5 EW	
F7.0	7' - 0"	7' - 0"	1' - 6"	(7) #5 EW	TOP & BOTT
F8.0	8' - 0"	8' - 0"	1' - 6"	(8) #6 EW	

KEY PLAN:

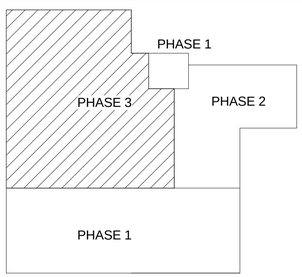

GRAPHIC SCALE:

1/8" =1'-0" 0' 4' 8' 16'

NAVFAC

COMMONWEALTH OF VIRGINIA
SCOTT M. FRANCIS
Lic. No. 039500
3/18/16
PROFESSIONAL ENGINEER
SEAL

Wiley|Wilson | BURNS & McDONNELL
JOINT VENTURE

A/E INFO.

APPROVED

FOR COMMANDER NAVFAC / B.L.T.L.

ACTIVITY

SATISFACTORY TO DATE

DES SMF | DRW SMF | CHK MV

PROJECT MANAGER

IPT TECH. BRANCH HEAD

CHIEF ENG/ARCH

DEPARTMENT OF THE NAVY
NAVAL FACILITIES ENGINEERING COMMAND
WEBSTER FIELD, NAS PATUXENT RIVER

NAVAL FACILITIES ENGINEERING COMMAND – WASHINGTON
ST. INIGOES, MD

NAVAL AIR STATION PATUXENT RIVER
ST. INIGOES, MD

BUILDING 8008 REPAIRS, ALTERATIONS AND ADDITION

FOUNDATION PLAN - PHASE 3

SCALE: AS NOTED
EPROJECT NO. 1183080
CONSTR. CONTR. NO. N40080-15-D-0452
NAVFAC DRAWING NO. 13078319
SHEET 35 OF 180

S-101C

FILE NAME: C:\Users\Public\Documents\Revit 2015\2015135R15_S_CEN_sfrancis.rvt
REVDATE: 3/17/2016 1:20:04 PM

DRAWFORM REVISION: 10 MAY 2014

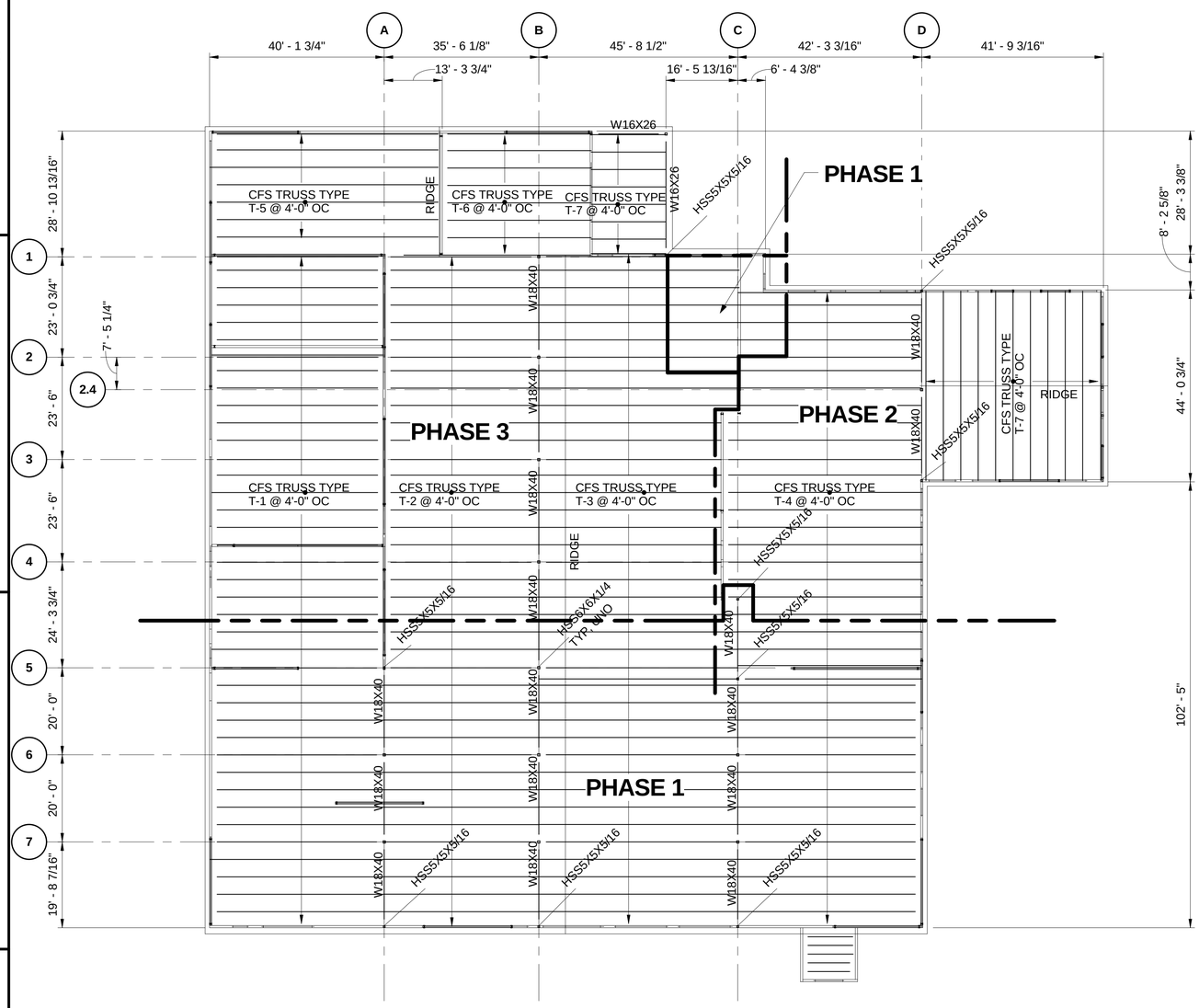

PLAN NORTH

ROOF FRAMING PLAN - OVERALL

SCALE: 1/16" = 1'-0"

PLAN NOTES:

1. TRUSS BEARING ELEVATION = 114.00' REFERENCE, TYPICAL UNLESS NOTED OTHERWISE.
2. ▬▬▬ DENOTES LOCATION OF SHEAR WALLS. SEE DETAILS FOR ADDITIONAL INFORMATION.
3. COORDINATE LOCATION OF ROOF TOP UNITS, ASSOCIATED DUCT OPENINGS, AND OTHER MECHANICAL EQUIPMENT WITH TRUSSES. SEE MEP DRAWINGS FOR LOCATIONS.
4. ALONG PERIMETER WALLS AND AT INTERIOR BEARING WALLS, DESIGN AND PROVIDE APPROPRIATE BLOCKING AND/OR BRIDGING NECESSARY TO TRANSFER A SHEAR LOAD OF 530 PLF FROM THE ROOF DIAPHRAGM DOWN TO THE TOP TRACK OF THE SUPPORTING ALL OR BEAM.
5. PROVIDE ADD'L (2) 600S162-68 BOXED STUD BELOW TRUSS BEARING LOCATIONS WITHIN LOAD BEARING WALLS.
6. GC COORDINATE LOCATION OF TRUSSES AND BOXED CFS STUDS SUPPORTING THEM. ADJUST SPACING AS NECESARY SO THAT NO TRUSS BEARS WITHIN 8" OF THE END OF A WALL OPENING.

KEY PLAN:

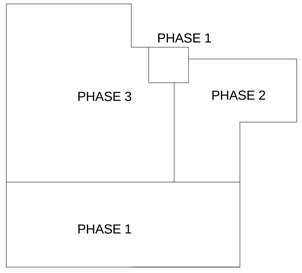

GRAPHIC SCALE:

1/16" =1'-0" 0' 8' 16' 32'

SYM	DESCRIPTION	DATE	APPR

NAVFAC

COMMONWEALTH OF VIRGINIA
SCOTT M. FRANCIS
Lic. No. 039500
3/18/16
PROFESSIONAL ENGINEER
SEAL

Wiley|Wilson | BURNS McDONNELL
JOINT VENTURE

A/E INFO.

APPROVED

FOR COMMANDER NAVFAC / B.L.T.L.

ACTIVITY

SATISFACTORY TO DATE

DES SMF | DRW SMF | CHK MV

PROJECT MANAGER

IPT TECH. BRANCH HEAD

CHIEF ENG/ARCH

DEPARTMENT OF THE NAVY
NAVAL FACILITIES ENGINEERING COMMAND
WEBSTER FIELD, NAS PATUXENT RIVER

NAVAL FACILITIES ENGINEERING COMMAND – WASHINGTON
ST. INIGOES, MD

NAVAL AIR STATION PATUXENT RIVER
ST. INIGOES, MD

BUILDING 8008 REPAIRS, ALTERATIONS AND ADDITION

ROOF FRAMING - OVERALL

SCALE: AS NOTED
EPROJECT NO. 1183080
CONSTR. CONTR. NO. N40080-15-D-0452
NAVFAC DRAWING NO. 13078320
SHEET 36 OF 180
S-102

DRAWFORM REVISION: 10 MAY 2014

FILE NAME: C:\Users\Public\Documents\Revit 2015\215135R15_S_CEN_sfrancis.rvt
REVDATE: 3/17/2016 1:20:05 PM

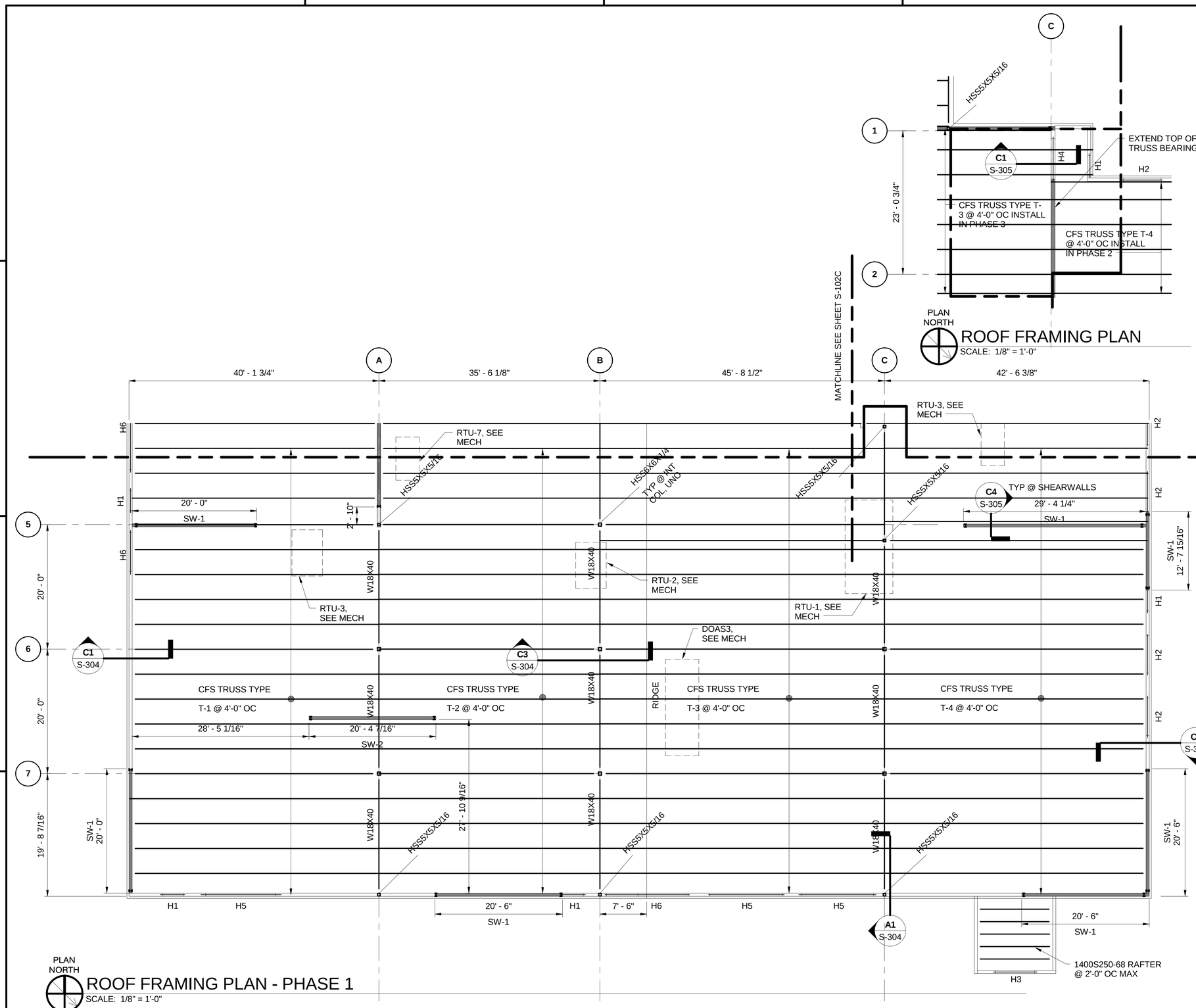

PLAN NORTH

ROOF FRAMING PLAN - PHASE 1

SCALE: 1/8" = 1'-0"

PLAN NOTES

1. TRUSS BEARING ELEVATION = 114.00' REFERENCE, TYPICAL UNLESS NOTED OTHERWISE.
2. DENOTES LOCATION OF SHEAR WALLS. SEE DETAILS FOR ADDITIONAL INFORMATION.
3. COORDINATE LOCATION OF ROOF TOP UNITS, ASSOCIATED DUCT OPENINGS, AND OTHER MECHANICAL EQUIPMENT WITH TRUSSES. SEE MEP DRAWINGS FOR LOCATIONS.
4. ALONG PERIMETER WALLS AND AT INTERIOR BEARING WALLS, DESIGN AND PROVIDE APPROPRIATE BLOCKING AND/OR BRIDGING NECESSARY TO TRANSFER A SHEAR LOAD OF 530 PLF FROM THE ROOF DIAPHRAGM DOWN TO THE TOP TRACK OF THE SUPPORTING ALL OR BEAM.
5. PROVIDE ADD'L (2) 600S162-68 BOXED STUD BELOW TRUSS BEARING LOCATIONS WITHIN LOAD BEARING WALLS.
6. GC COORDINATE LOCATION OF TRUSSES AND BOXED CFS STUDS SUPPORTING THEM. ADJUST SPACING AS NECESARY SO THAT NO TRUSS BEARS WITHIN 8" OF THE END OF A WALL OPENING.
7. H# DENOTES HEADER DESIGNATION. SEE SCHEDULE ON SHEET S-503 FOR ADDITIONAL INFORMATION.

KEY PLAN:

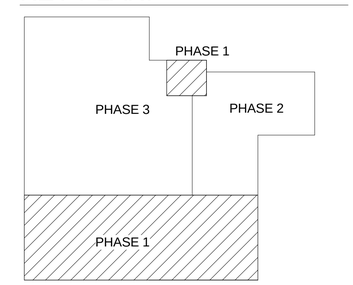

GRAPHIC SCALE:

1/8" =1'-0" 0' 4' 8' 16'

SYM	DESCRIPTION	DATE	APPR

NAVFAC

COMMONWEALTH OF VIRGINIA
SCOTT M. FRANCIS
Lic. No. 039500
3/18/16
PROFESSIONAL ENGINEER
SEAL

Wiley|Wilson | BURNS McDONNELL
JOINT VENTURE

A/E INFO

APPROVED
FOR COMMANDER NAVFAC / B.L.T.L

ACTIVITY

SATISFACTORY TO DATE

DES	SMF	DRW	SMF	CHK	MV

PROJECT MANAGER
IPT TECH. BRANCH HEAD
CHIEF ENG/ARCH

DEPARTMENT OF THE NAVY
NAVAL FACILITIES ENGINEERING COMMAND
WEBSTER FIELD, NAS PATUXENT RIVER
NAVAL FACILITIES ENGINEERING COMMAND – WASHINGTON
ST. INIGOES, MD
NAVAL AIR STATION PATUXENT RIVER
ST. INIGOES, MD

BUILDING 8008 REPAIRS, ALTERATIONS AND ADDITION

ROOF FRAMING PLAN - PHASE 1

SCALE: AS NOTED
EPROJECT NO. 1183080
CONSTR. CONTR. NO. N40080-15-D-0452
NAVFAC DRAWING NO. 13078321
SHEET 37 OF 180

S-102A

DRAWFORM REVISION: 10 MAY 2014

FILE NAME: C:\Users\Public\Documents\Revit 2015\2151135R15_S_CEN_sfrancis.rvt
REV/DATE: 3/17/2016 1:20:07 PM

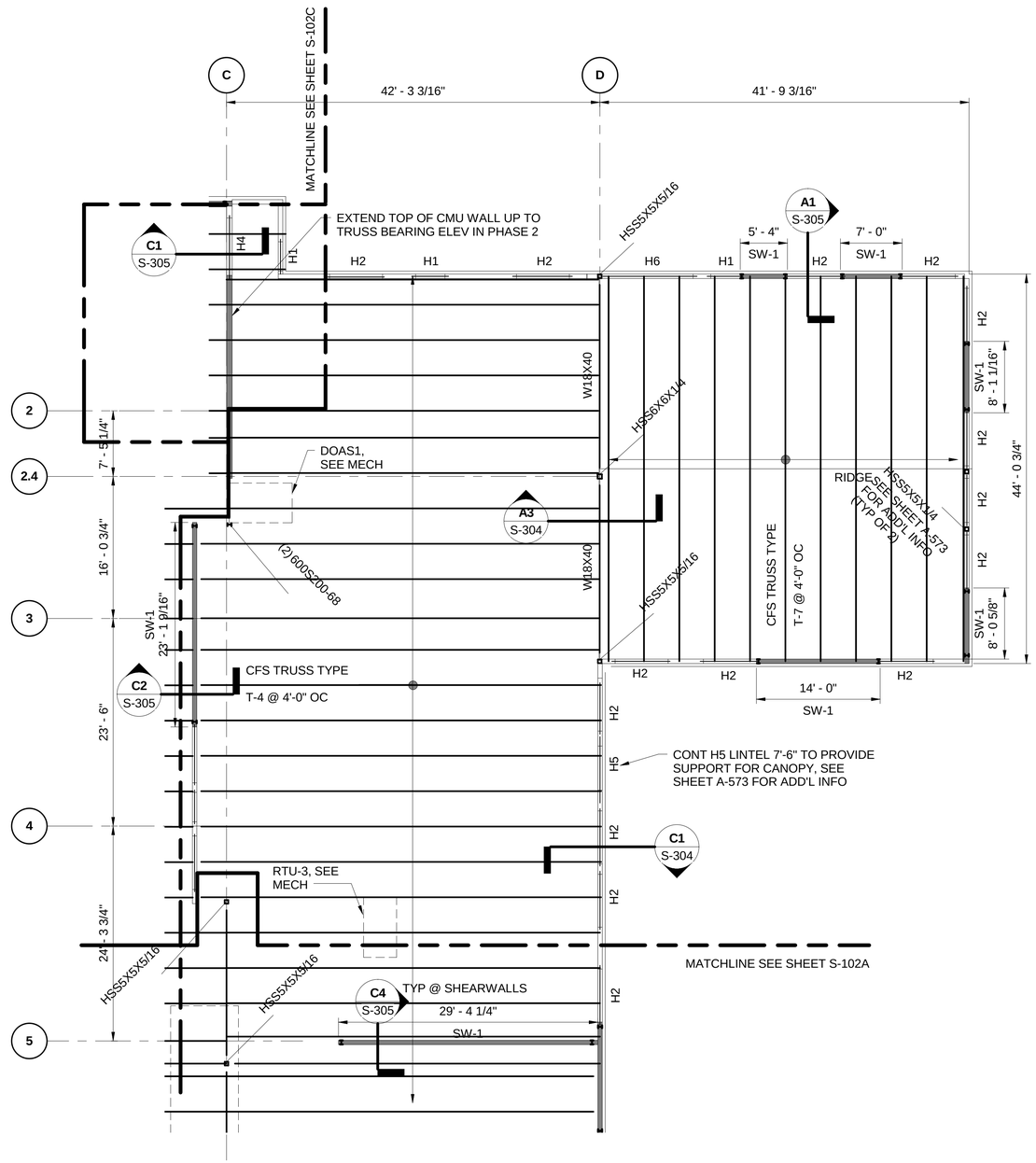

PLAN NORTH

ROOF FRAMING PLAN - PHASE 2

SCALE: 1/8" = 1'-0"

PLAN NOTES

1. TRUSS BEARING ELEVATION = 114.00' REFERENCE, TYPICAL UNLESS NOTED OTHERWISE.
2. [redacted] DENOTES LOCATION OF SHEAR WALLS. SEE DETAILS FOR ADDITIONAL INFORMATION.
3. COORDINATE LOCATION OF ROOF TOP UNITS, ASSOCIATED DUCT OPENINGS, AND OTHER MECHANICAL EQUIPMENT WITH TRUSSES. SEE MEP DRAWINGS FOR LOCATIONS.
4. ALONG PERIMETER WALLS AND AT INTERIOR BEARING WALLS, DESIGN AND PROVIDE APPROPRIATE BLOCKING AND/OR BRIDGING NECESSARY TO TRANSFER A SHEAR LOAD OF 530 PLF FROM THE ROOF DIAPHRAGM DOWN TO THE TOP TRACK OF THE SUPPORTING ALL OR BEAM.
5. PROVIDE ADD'L (2) 600S162-68 BOXED STUD BELOW TRUSS BEARING LOCATIONS WITHIN LOAD BEARING WALLS.
6. GC COORDINATE LOCATION OF TRUSSES AND BOXED CFS STUDS SUPPORTING THEM. ADJUST SPACING AS NECESARY SO THAT NO TRUSS BEARS WITHIN 8" OF THE END OF A WALL OPENING.
7. H# DENOTES HEADER DESIGNATION. SEE SCHEDULE ON SHEET S-503 FOR ADDITIONAL INFORMATION.

KEY PLAN:

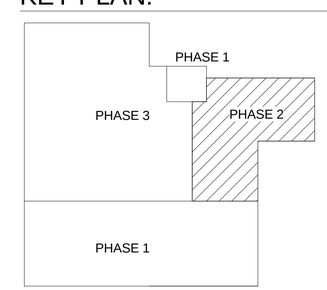

GRAPHIC SCALE:

1/8" =1'-0" 0' 4' 8' 16'

SYM	DESCRIPTION	DATE	APPR

NAVFAC

COMMONWEALTH OF VIRGINIA
SCOTT M. FRANCIS
Lic. No. 039500
3/18/16
PROFESSIONAL ENGINEER
SEAL

Wiley|Wilson | BURNS McDONNELL
JOINT VENTURE

A/E INFO

APPROVED
FOR COMMANDER NAVFAC / B.L.T.L.

ACTIVITY

SATISFACTORY TO DATE

DES SMF	DRW SMF	CHK MV

PROJECT MANAGER
IPT TECH. BRANCH HEAD
CHIEF ENG/ARCH

DEPARTMENT OF THE NAVY
NAVAL FACILITIES ENGINEERING COMMAND
WEBSTER FIELD, NAS PATUXENT RIVER

NAVAL FACILITIES ENGINEERING COMMAND ~ WASHINGTON
ST. INIGOES, MD

NAVAL AIR STATION PATUXENT RIVER
ST. INIGOES, MD

BUILDING 8008 REPAIRS, ALTERATIONS AND ADDITION

ROOF FRAMING PLAN - PHASE 2

SCALE: AS NOTED
EPROJECT NO. 1183080
CONSTR. CONTR. NO. N40080-15-D-0452
NAVFAC DRAWING NO. 13078322
SHEET 38 OF 180
S-102B

DRAWFORM REVISION: 10 MAY 2014

FILE NAME: C:\Users\Public\Documents\Revit 2015\215135R15_S_CEN_sfrancis.rvt
REVDATE: 3/17/2016 1:20:07 PM

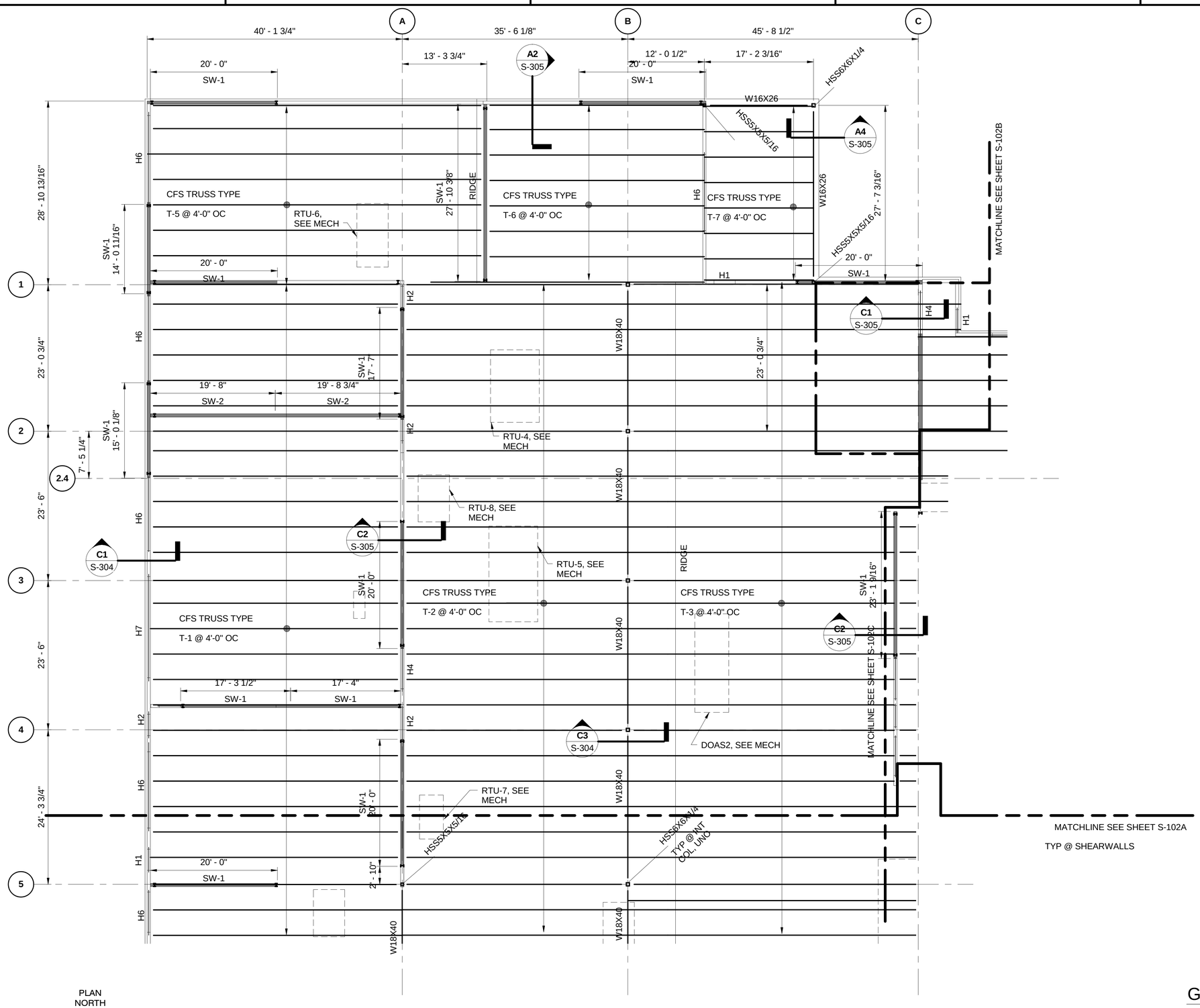

ROOF FRAMING PLAN - PHASE 3

SCALE: 1/8" = 1'-0"

PLAN NOTES

1. TRUSS BEARING ELEVATION = 114.00' REFERENCE, TYPICAL UNLESS NOTED OTHERWISE.
2. ▬ DENOTES LOCATION OF SHEAR WALLS. SEE DETAILS FOR ADDITIONAL INFORMATION.
3. COORDINATE LOCATION OF ROOF TOP UNITS, ASSOCIATED DUCT OPENINGS AND OTHER MECHANICAL EQUIPMENT WITH TRUSSES. SEE MEP DRAWINGS FOR LOCATIONS.
4. ALONG PERIMETER WALLS AND AT INTERIOR BEARING WALLS, DESIGN AND PROVIDE APPROPRIATE BLOCKING AND/OR BRIDGING NECESSARY TO TRANSFER A SHEAR LOAD OF 530 PLF FROM THE ROOF DIAPHRAGM DOWN TO THE TOP TRACK OF THE SUPPORTING ALL OR BEAM.
5. PROVIDE ADD'L (2) 600S162-68 BOXED STUD BELOW TRUSS BEARING LOCATIONS WITHIN LOAD BEARING WALLS.
6. GC COORDINATE LOCATION OF TRUSSES AND BOXED CFS STUDS SUPPORTING THEM. ADJUST SPACING AS NECESARY SO THAT NO TRUSS BEARS WITHIN 8" OF THE END OF A WALL OPENING.
7. H# DENOTES HEADER DESIGNATION. SEE SCHEDULE ON SHEET S-503 FOR ADDITIONAL INFORMATION.

KEY PLAN:

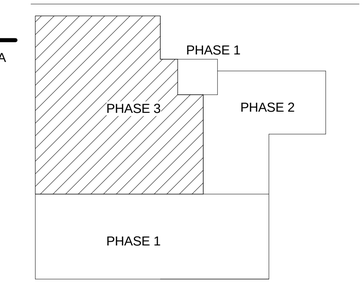

GRAPHIC SCALE:

1/8" =1'-0" 0' 4' 8' 16'

SYM	DESCRIPTION	DATE	APPR

NAVFAC

COMMONWEALTH OF VIRGINIA
SCOTT M. FRANCIS
Lic. No. 039500
3/18/16
PROFESSIONAL ENGINEER
SEAL

Wiley|Wilson | BURNS McDONNELL
JOINT VENTURE

A/E INFO.

APPROVED
FOR COMMANDER NAVFAC / B.L.T.L.

ACTIVITY

SATISFACTORY TO DATE

DES SMF	DRW SMF	CHK MV

PROJECT MANAGER
IPT TECH. BRANCH HEAD
CHIEF ENG/ARCH

DEPARTMENT OF THE NAVY
NAVAL FACILITIES ENGINEERING COMMAND
WEBSTER FIELD, NAS PATUXENT RIVER

NAVAL FACILITIES ENGINEERING COMMAND – WASHINGTON
ST. INIGOES, MD

NAVAL AIR STATION PATUXENT RIVER
ST. INIGOES, MD

BUILDING 8008 REPAIRS, ALTERATIONS AND ADDITION

ROOF FRAMING PLAN - PHASE 3

SCALE: AS NOTED
EPROJECT NO. 1183080
CONSTR. CONTR. NO. N40080-15-D-0452
NAVFAC DRAWING NO. 13078323
SHEET 39 OF 180

S-102C

DRAWFORM REVISION: 10 MAY 2014

FILE NAME: C:\Users\Public\Documents\Revit 2015\215135R15_S_CEN_sfrancis.rvt
REVDATE: 3/17/2016 1:20:09 PM

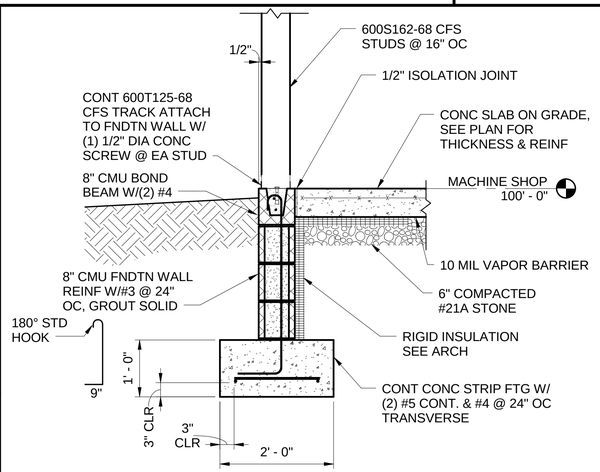

C1 S-101A SECTION
SCALE: 3/4" = 1'-0"

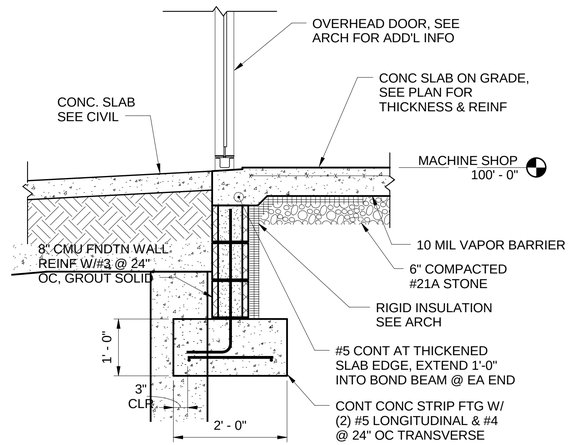

C2 S-101A SECTION
SCALE: 3/4" = 1'-0"

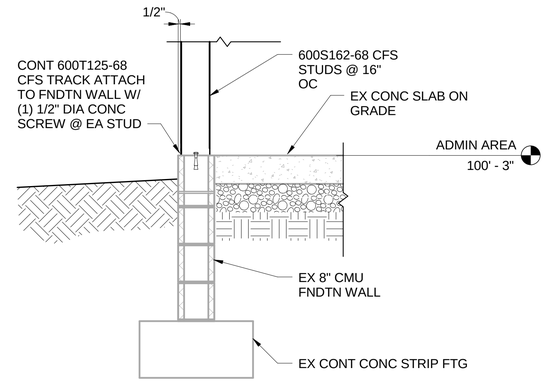

C3 S-101B SECTION
SCALE: 3/4" = 1'-0"

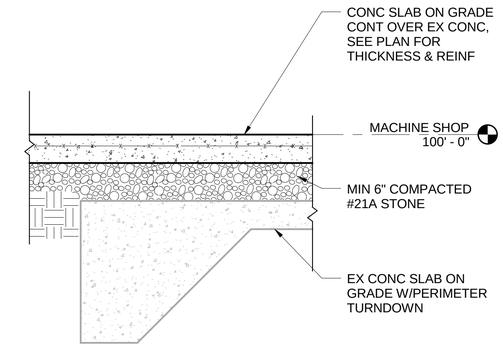

C4 S-101A SECTION
SCALE: 3/4" = 1'-0"

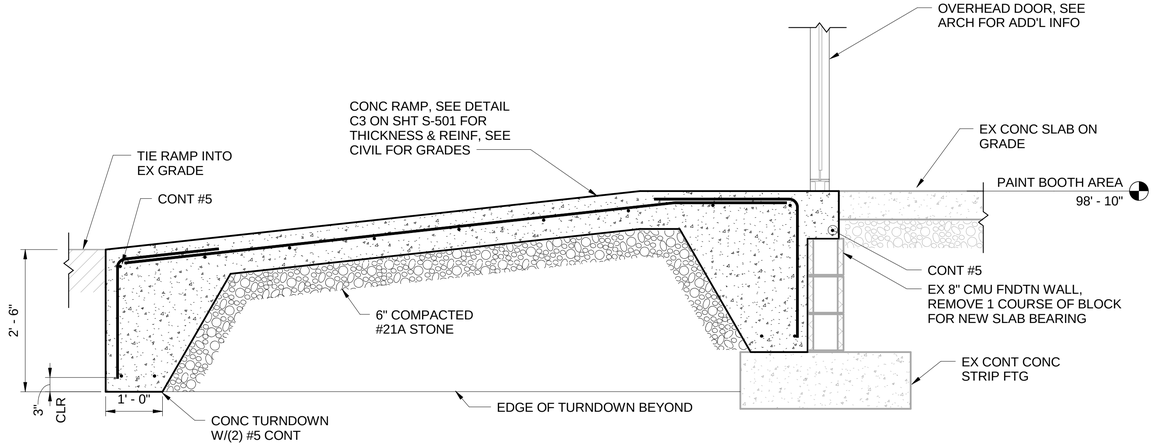

B1 S-101C SECTION
SCALE: 3/4" = 1'-0"

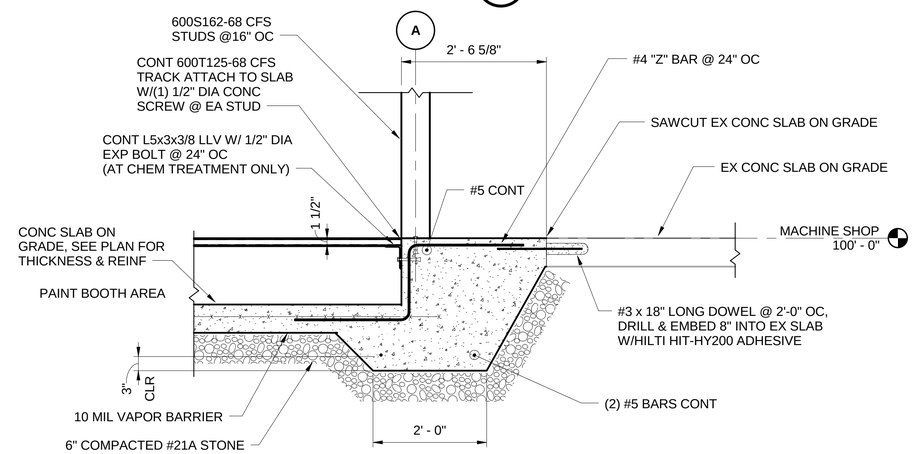

B4 S-101C SECTION
SCALE: 3/4" = 1'-0"

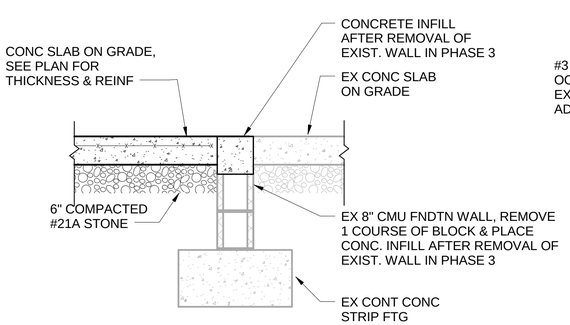

A1 S-101A SECTION
SCALE: 3/4" = 1'-0"

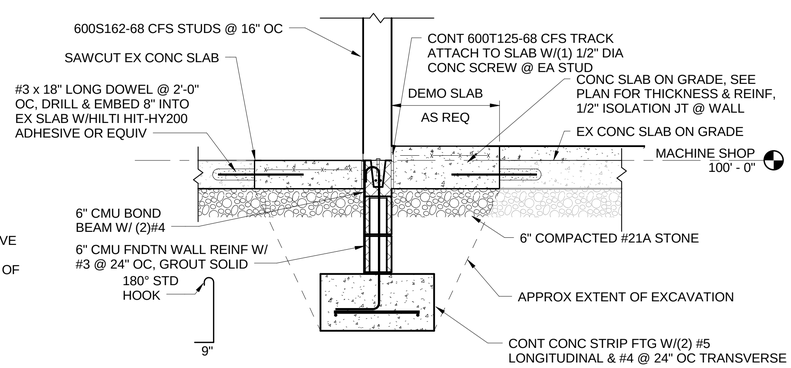

A2 S-101B SECTION
SCALE: 3/4" = 1'-0"

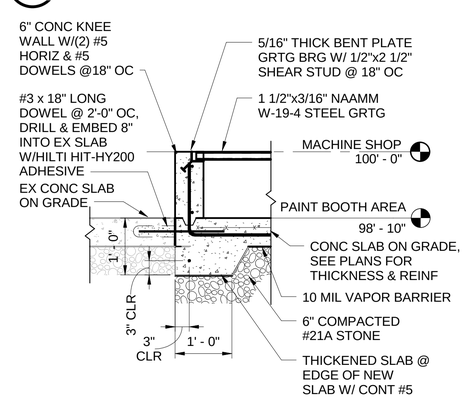

A4 S-101C SECTION
SCALE: 3/4" = 1'-0"

SYM	DESCRIPTION	DATE	APPR

NAVFAC

COMMONWEALTH OF VIRGINIA
SCOTT M. FRANCIS
Lic. No. 039500
3/18/16
PROFESSIONAL ENGINEER
SEAL

Wiley|Wilson | BURNS McDONNELL
JOINT VENTURE

A/E INFO

APPROVED
FOR COMMANDER NAVFAC / B.L.T.L.

ACTIVITY

SATISFACTORY TO DATE

DES SMF	DRW SMF	CHK MV

PROJECT MANAGER
IPT TECH. BRANCH HEAD
CHIEF ENG/ARCH

DEPARTMENT OF THE NAVY
NAVAL FACILITIES ENGINEERING COMMAND
WEBSTER FIELD, NAS PATUXENT RIVER
NAVAL FACILITIES ENGINEERING COMMAND ~ WASHINGTON
ST. INIGOES, MD
NAVAL AIR STATION PATUXENT RIVER
ST. INIGOES, MD
BUILDING 8008 REPAIRS, ALTERATIONS AND ADDITION
FOUNDATION SECTIONS

SCALE: AS NOTED
EPROJECT NO. 1183080
CONSTR. CONTR. NO. N40080-15-D-0452
NAVFAC DRAWING NO. 13078324
SHEET 40 OF 180
S-301

DRAWFORM REVISION: 10 MAY 2014

FILE NAME: C:\Users\Public\Documents\Revit 2015\215135R15_S_CEN_sfrancis.rvt
REV/DATE: 3/17/2016 1:20:12 PM

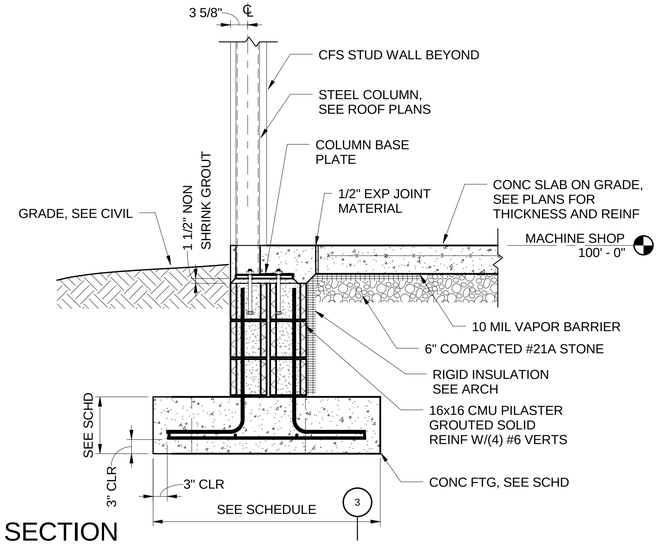

C1 S-101A SECTION
SCALE: 3/4" = 1'-0"
S-101B

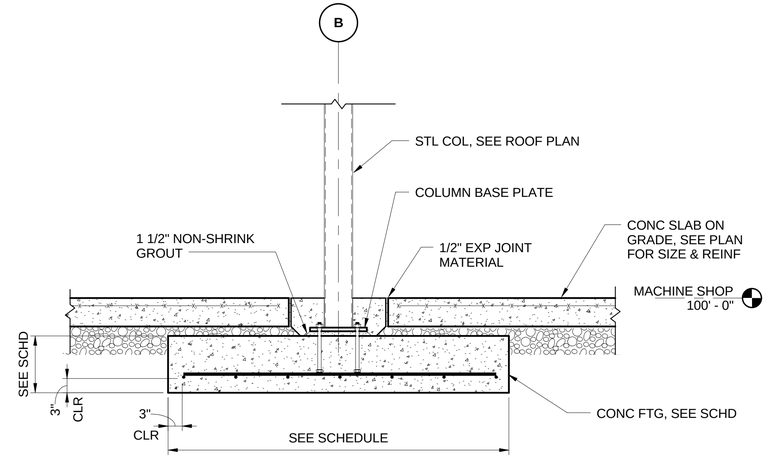

C2 S-101A SECTION
SCALE: 3/4" = 1'-0"
S-101B

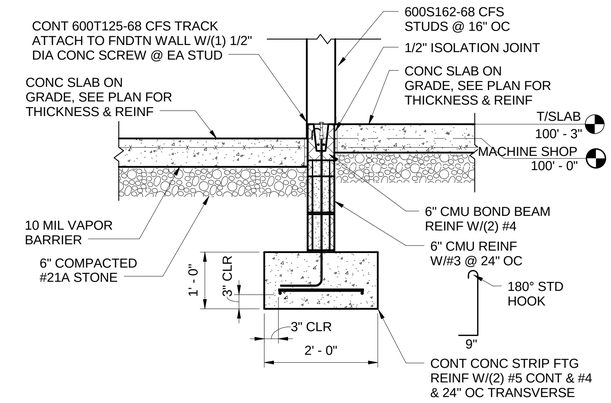

C4 S-101A SECTION
SCALE: 3/4" = 1'-0"

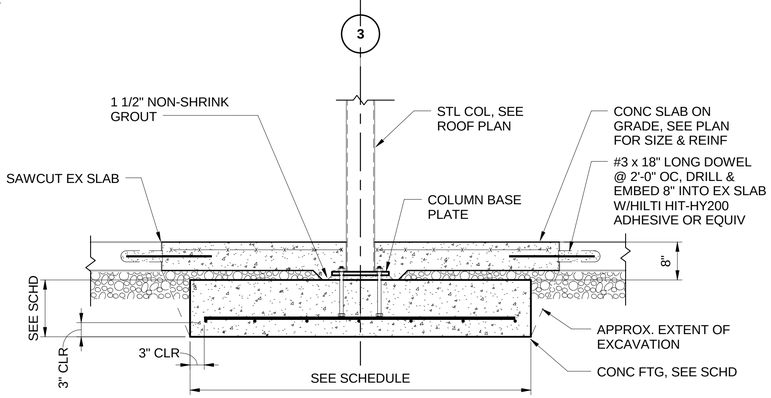

B1 S-101A SECTION
SCALE: 3/4" = 1'-0"
S-101B

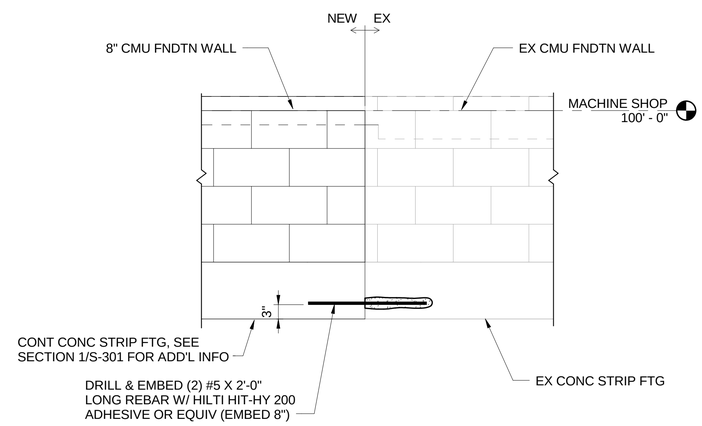

B3 S-101B SECTION
SCALE: 3/4" = 1'-0"

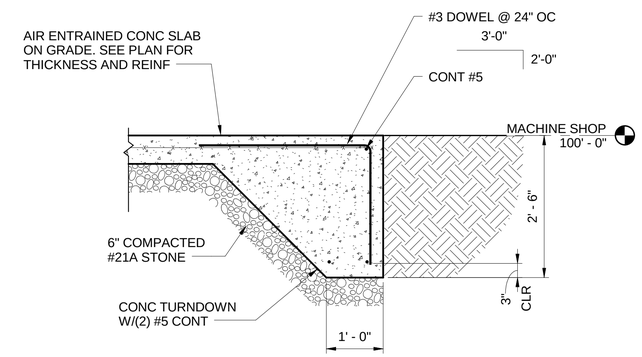

B4 S-101C SECTION
SCALE: 3/4" = 1'-0"

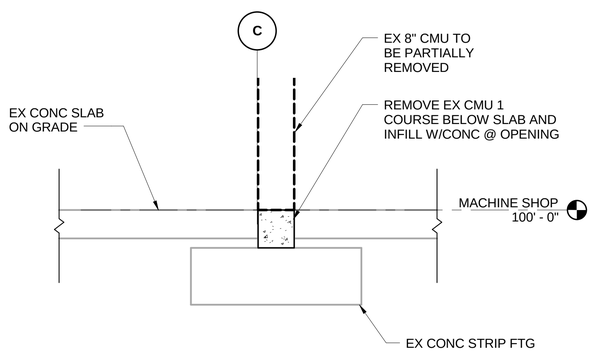

A1 S-101A SECTION
SCALE: 3/4" = 1'-0"

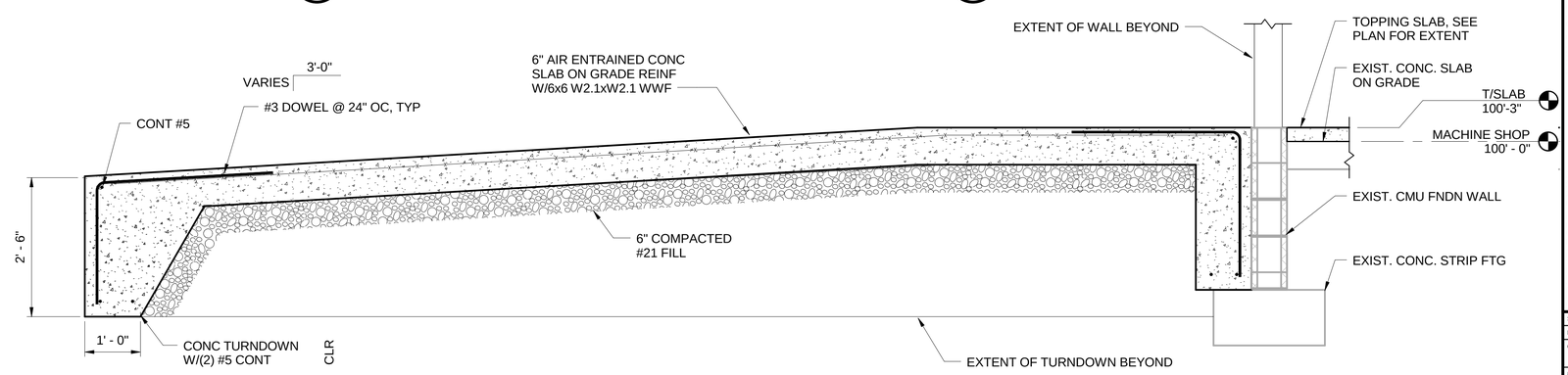

A2 S-101B SECTION
SCALE: 3/4" = 1'-0"

SYM	DESCRIPTION	DATE	APPR

SCOTT M. FRANCIS
Lic. No. 039500
3/18/16
COMMONWEALTH OF VIRGINIA
PROFESSIONAL ENGINEER
SEAL

Wiley|Wilson | BURNS McDONNELL
JOINT VENTURE

A/E INFO

APPROVED
FOR COMMANDER NAVFAC / B.L.T.L.

ACTIVITY

SATISFACTORY TO DATE
DES SMF | DRW WJB | CHK MV
PROJECT MANAGER
IPT TECH. BRANCH HEAD
CHIEF ENG/ARCH

DEPARTMENT OF THE NAVY
NAVAL FACILITIES ENGINEERING COMMAND
WEBSTER FIELD, NAS PATUXENT RIVER

NAVAL FACILITIES ENGINEERING COMMAND ~ WASHINGTON
ST. INIGOES, MD

NAVAL AIR STATION PATUXENT RIVER
ST. INIGOES, MD

BUILDING 8008 REPAIRS, ALTERATIONS AND ADDITION

FOUNDATION SECTIONS

SCALE: AS NOTED
EPROJECT NO. 1183080
CONSTR. CONTR. NO. N40080-15-D-0452
NAVFAC DRAWING NO. 13078325
SHEET 41 OF 180
S-302

DRAWFORM REVISION: 10 MAY 2014

FILE NAME: C:\Users\Public\Documents\Revit 2015\215135R15_S_CEN_sfrancis.rvt
REVDATE: 3/17/2016 1:20:15 PM

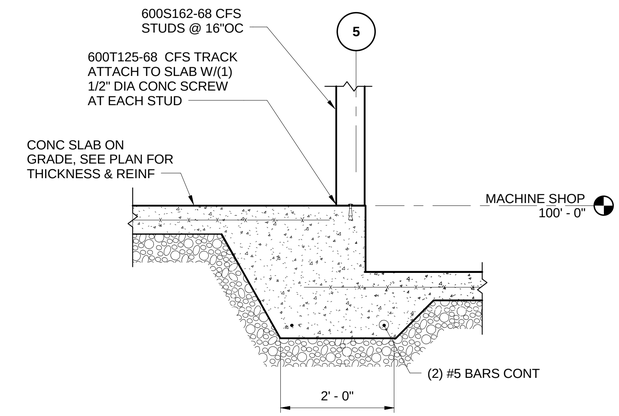

C1 S-101A SECTION
SCALE: 3/4" = 1'-0"

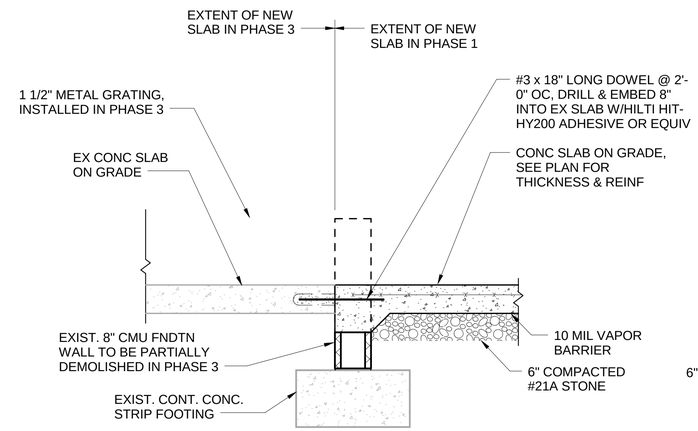

C2 S-101C SECTION
SCALE: 3/4" = 1'-0"

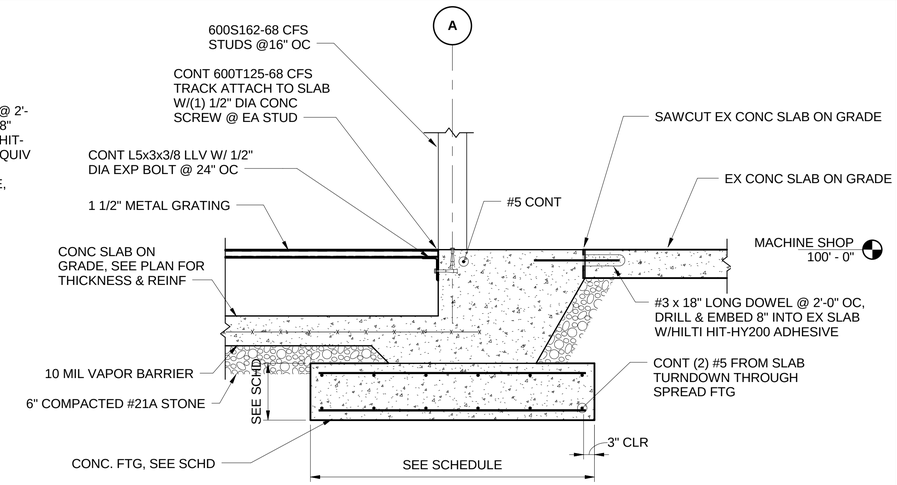

C4 S-101C SECTION
SCALE: 3/4" = 1'-0"

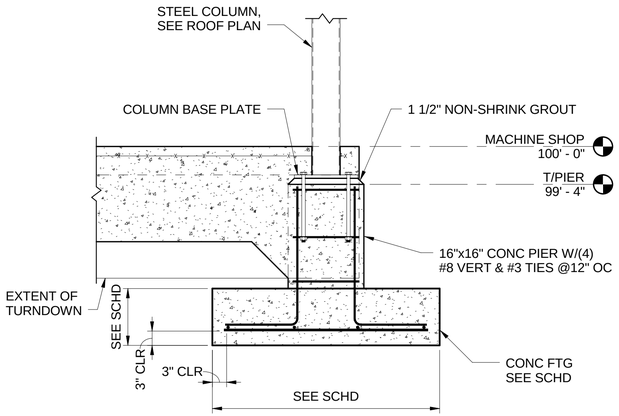

B1 S-101C SECTION
SCALE: 3/4" = 1'-0"

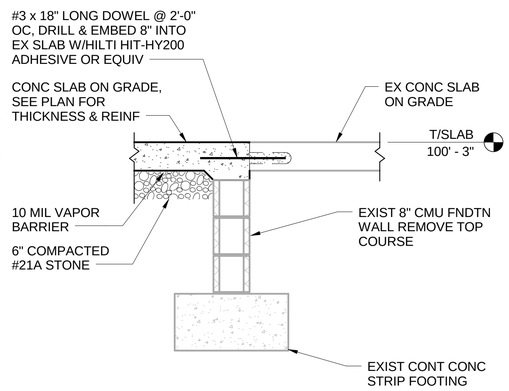

B2 S-101B SECTION
SCALE: 3/4" = 1'-0"

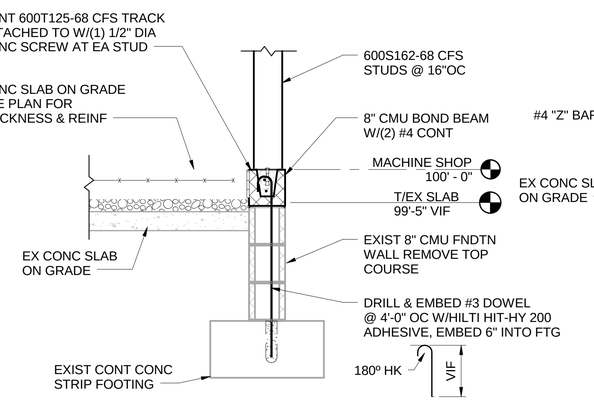

B3 S-101C SECTION
SCALE: 3/4" = 1'-0"

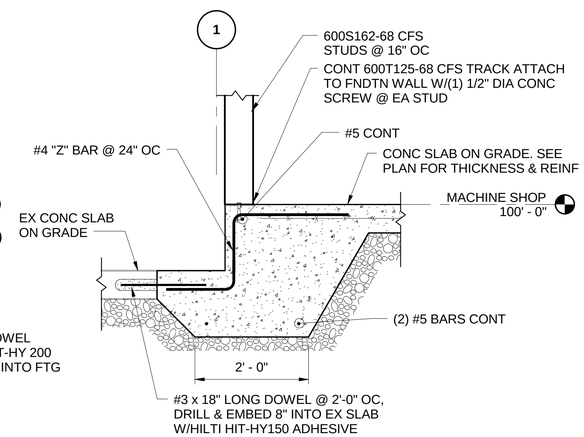

B4 S-101C SECTION
SCALE: 3/4" = 1'-0"

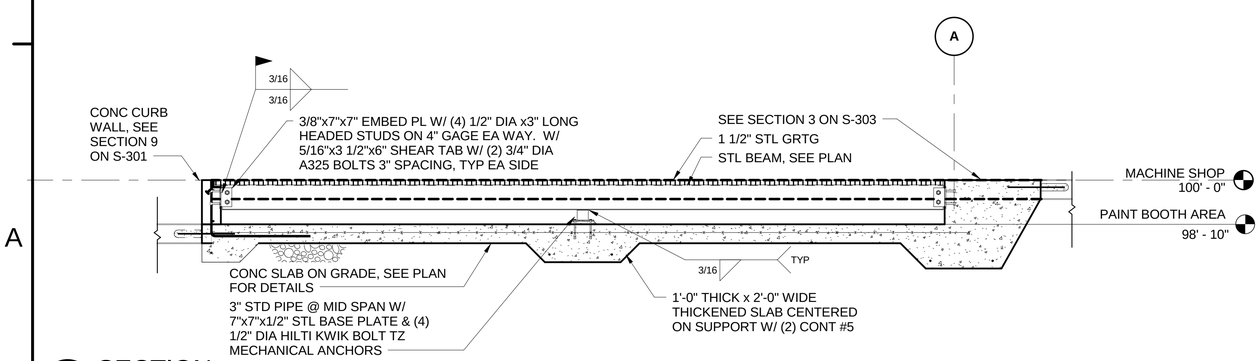

A1 S-101C SECTION
SCALE: 1/2" = 1'-0"

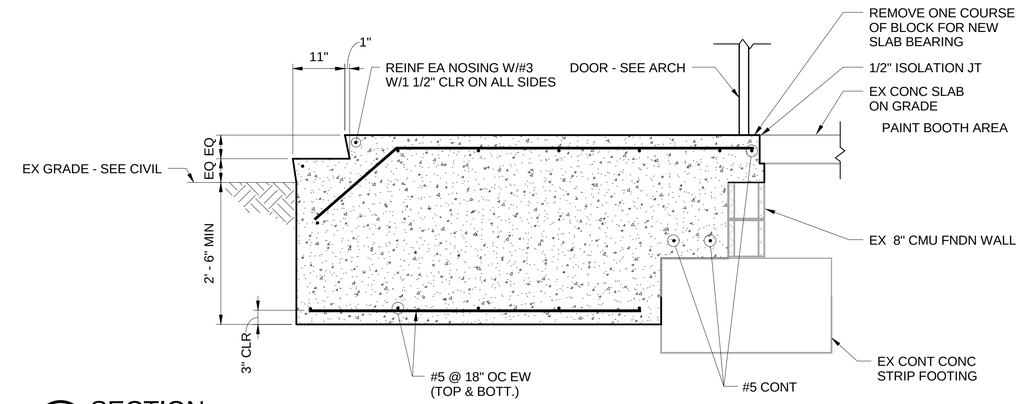

A3 S-101C SECTION
SCALE: 3/4" = 1'-0"

NOTE: SEE ARCH DWGS FOR FURTHER DETAILS

SYM	DESCRIPTION	DATE	APPR

NAVFAC

COMMONWEALTH OF VIRGINIA
SCOTT M. FRANCIS
Lic. No. 039500
3/18/16
PROFESSIONAL ENGINEER
SEAL

Wiley|Wilson | BURNS McDONNELL
JOINT VENTURE

A/E INFO

APPROVED

FOR COMMANDER NAVFAC / B.L.T.L

ACTIVITY

SATISFACTORY TO DATE

DES	SMF	DRW	WJB	CHK	MV

PROJECT MANAGER
IPT TECH. BRANCH HEAD
CHIEF ENG/ARCH

DEPARTMENT OF THE NAVY
NAVAL FACILITIES ENGINEERING COMMAND
WEBSTER FIELD, NAS PATUXENT RIVER

NAVAL FACILITIES ENGINEERING COMMAND – WASHINGTON
ST. INIGOES, MD

NAVAL AIR STATION PATUXENT RIVER
ST. INIGOES, MD

BUILDING 8008 REPAIRS, ALTERATIONS AND ADDITION

FOUNDATION SECTIONS

SCALE: AS NOTED
EPROJECT NO. 1183080
CONSTR. CONTR. NO. N40080-15-D-0452
NAVFAC DRAWING NO. 13078326
SHEET 42 OF 180
S-303

DRAWFORM REVISION: 10 MAY 2014

FILE NAME: C:\Users\Public\Documents\Revit 2015\215135R15_S_CEN_sfrancis.rvt
REVDATE: 3/17/2016 1:20:18 PM

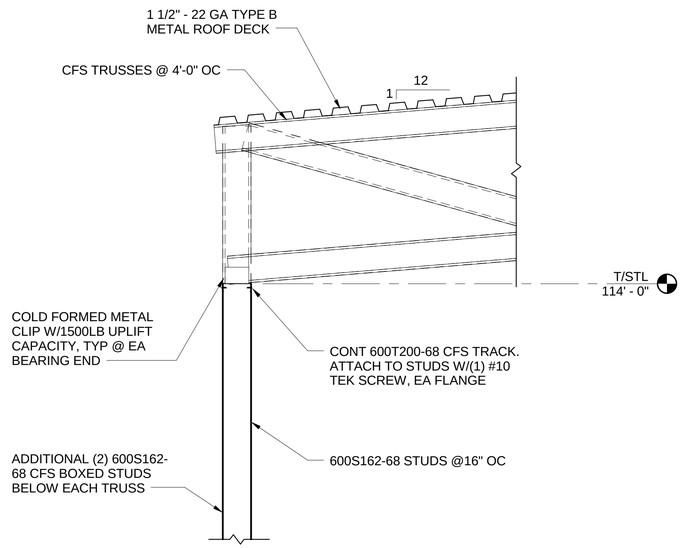

C1 S-102A **SECTION**
SCALE: 3/4" = 1'-0"

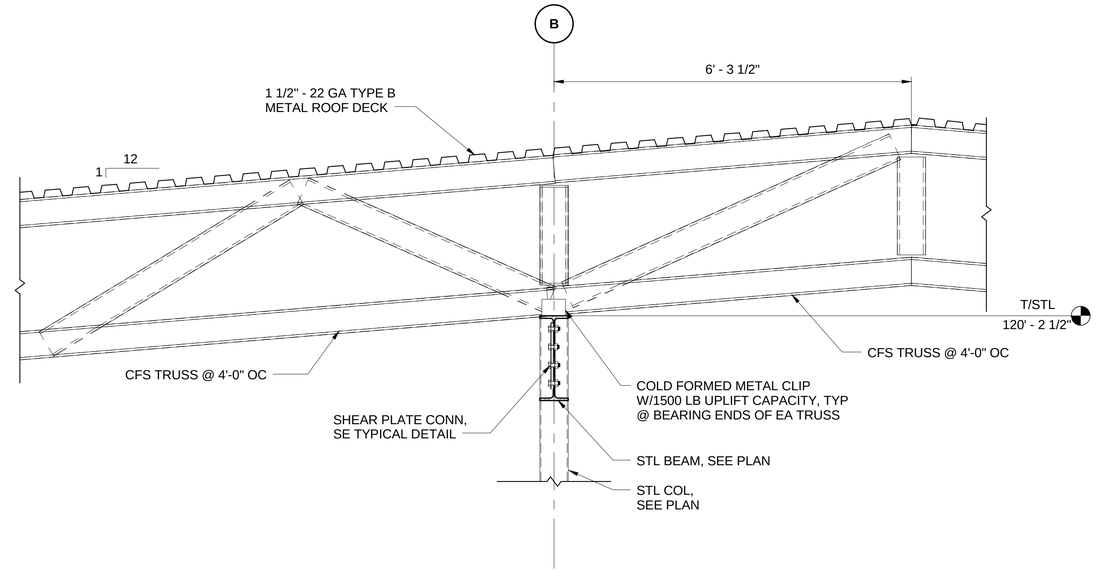

C3 S-102A **SECTION**
SCALE: 3/4" = 1'-0"

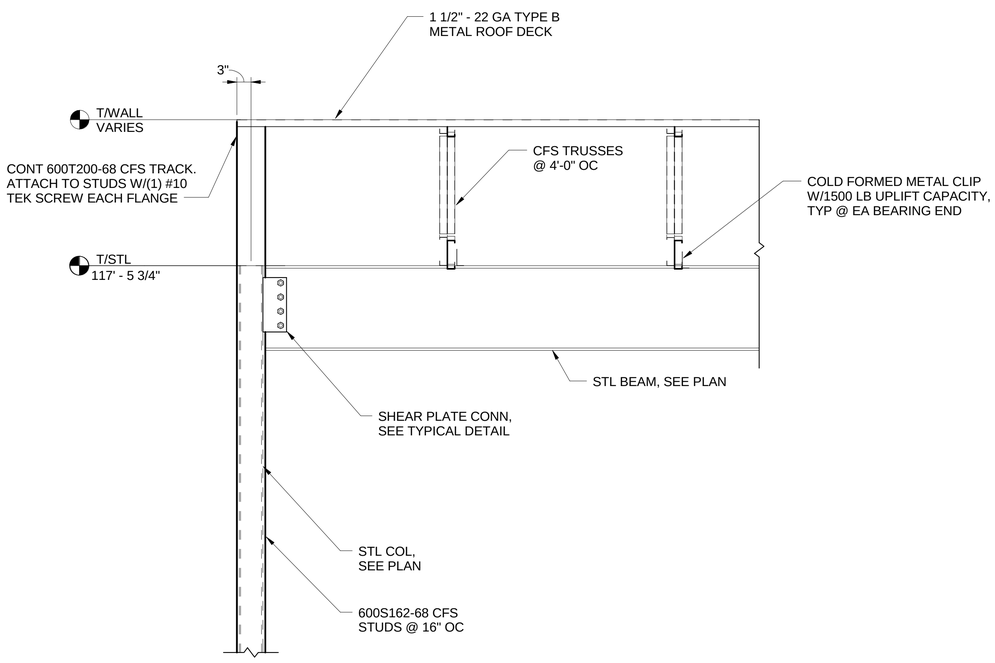

A1 S-102A **SECTION**
SCALE: 3/4" = 1'-0"

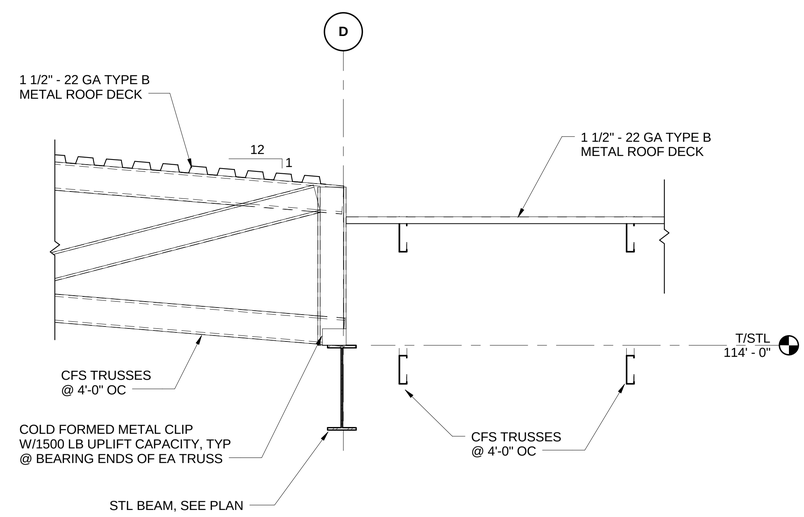

A3 S-102B **SECTION**
SCALE: 3/4" = 1'-0"

SYM	DESCRIPTION	DATE	APPR

NAVFAC

COMMONWEALTH OF VIRGINIA
SCOTT M. FRANCIS
Lic. No. 039500
3/18/16
PROFESSIONAL ENGINEER
SEAL

Wiley|Wilson | BURNS McDONNELL
JOINT VENTURE

A/E INFO

APPROVED
FOR COMMANDER NAVFAC / B.L.T.L

ACTIVITY

SATISFACTORY TO DATE

DES	SMF	DRW	SMF	CHK	MV

PROJECT MANAGER
IPT TECH. BRANCH HEAD
CHIEF ENG/ARCH

DEPARTMENT OF THE NAVY
NAVAL FACILITIES ENGINEERING COMMAND
WEBSTER FIELD, NAS PATUXENT RIVER
NAVAL FACILITIES ENGINEERING COMMAND ~ WASHINGTON
ST. INIGOES, MD
NAVAL AIR STATION PATUXENT RIVER
ST. INIGOES, MD

BUILDING 8008 REPAIRS, ALTERATIONS AND ADDITION

FRAMING SECTIONS

SCALE: AS NOTED
EPROJECT NO. 1183080
CONSTR. CONTR. NO. N40080-15-D-0452
NAVFAC DRAWING NO. 13078327
SHEET 43 OF 180
S-304

DRAWFORM REVISION: 10 MAY 2014

FILE NAME: C:\Users\Public\Documents\Revit 2015\215135R15_S_CEN_sfrancis.rvt
REVDATE: 3/17/2016 1:20:19 PM

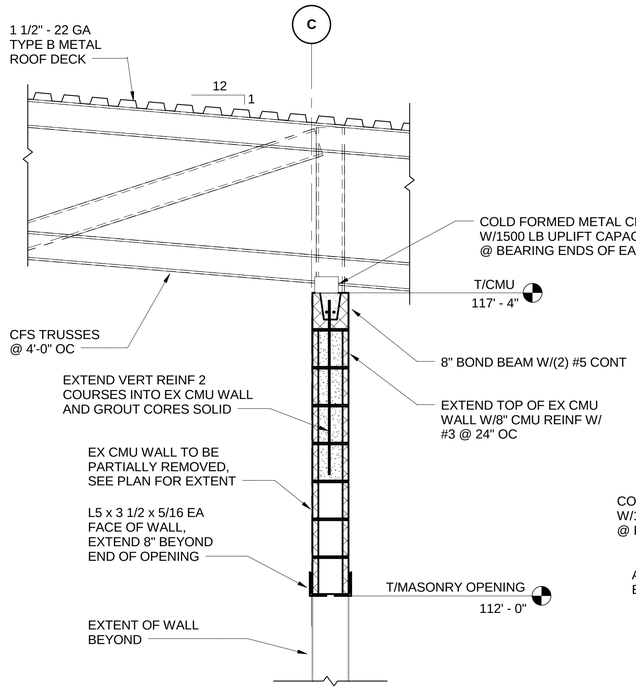

C1 S-102A SECTION
SCALE: 3/4" = 1'-0"

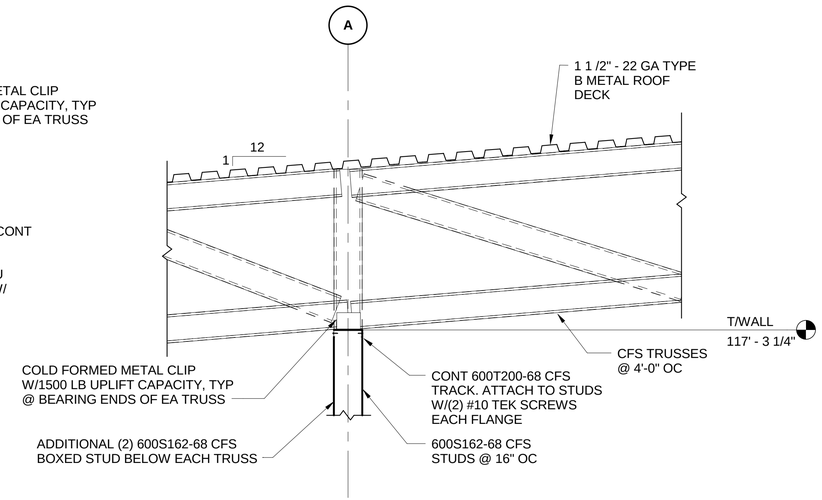

C2 S-102A SECTION
SCALE: 3/4" = 1'-0"

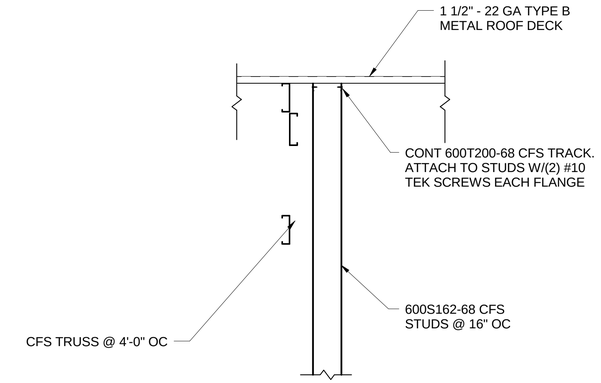

C4 S-102A SECTION
SCALE: 3/4" = 1'-0"

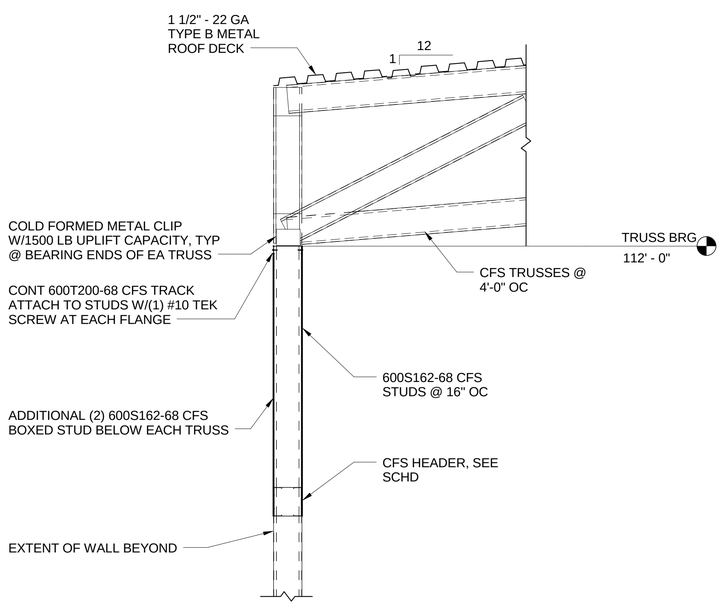

A1 S-102B SECTION
SCALE: 3/4" = 1'-0"

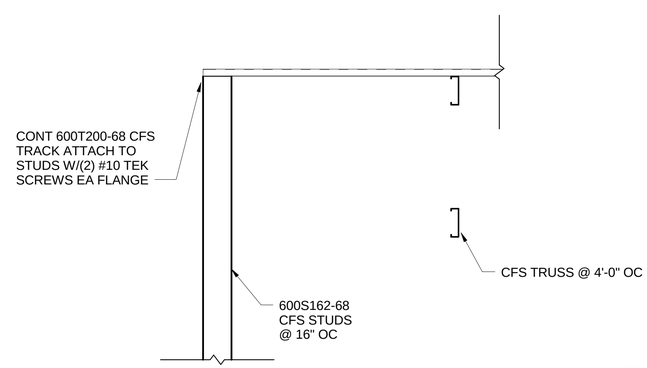

A2 S-102C SECTION
SCALE: 3/4" = 1'-0"

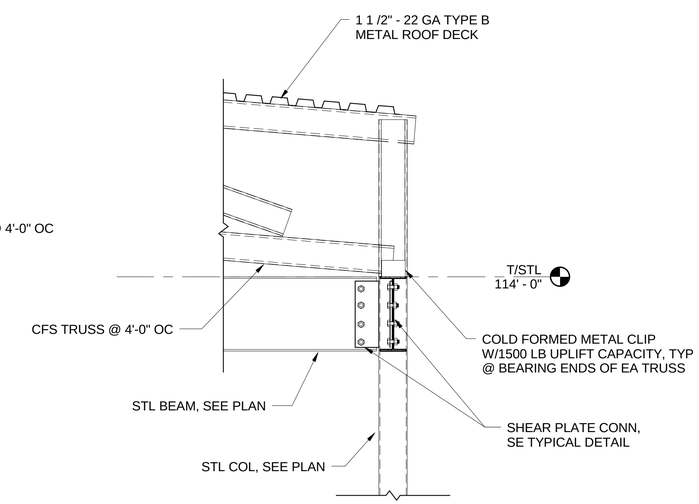

A4 S-102C SECTION
SCALE: 3/4" = 1'-0"

SYM	DESCRIPTION	DATE	APPR

NAVFAC

COMMONWEALTH OF VIRGINIA
SCOTT M. FRANCIS
Lic. No. 039500
3/18/16
PROFESSIONAL ENGINEER
SEAL

Wiley|Wilson | BURNS McDONNELL
JOINT VENTURE

A/E INFO

APPROVED
FOR COMMANDER NAVFAC / B.L.T.L.
ACTIVITY
SATISFACTORY TO DATE
DES SMF | DRW WJB | CHK MV
PROJECT MANAGER
IPT TECH. BRANCH HEAD
CHIEF ENG/ARCH

DEPARTMENT OF THE NAVY
NAVAL FACILITIES ENGINEERING COMMAND
WEBSTER FIELD, NAS PATUXENT RIVER
NAVAL FACILITIES ENGINEERING COMMAND ~ WASHINGTON
ST. INIGOES, MD
ST. INIGOES, MD
NAVAL AIR STATION PATUXENT RIVER
BUILDING 8008 REPAIRS, ALTERATIONS AND ADDITION
FRAMING SECTIONS

SCALE: AS NOTED
EPROJECT NO. 1183080
CONSTR. CONTR. NO. N40080-15-D-0452
NAVFAC DRAWING NO. 13078328
SHEET 44 OF 180
S-305

DRAWFORM REVISION: 10 MAY 2014

FILE NAME: C:\Users\Public\Documents\Revit 2015\21513\R15_S_CEN_sfrancis.rvt
REVDATE: 3/17/2016 1:20:21 PM

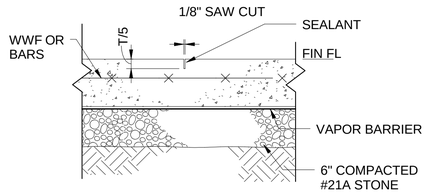

C1 DETAIL - CONTROL JOINT
SCALE: NOT TO SCALE

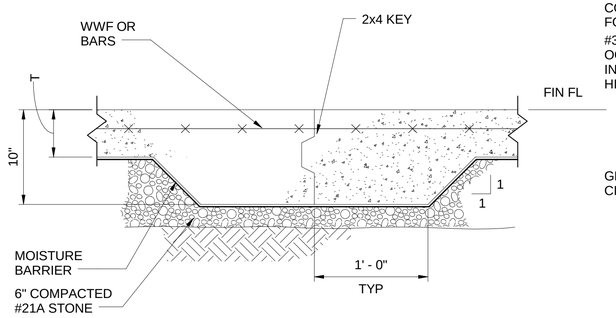

C2 DETAIL - CONSTRUCTION JOINT
SCALE: NOT TO SCALE

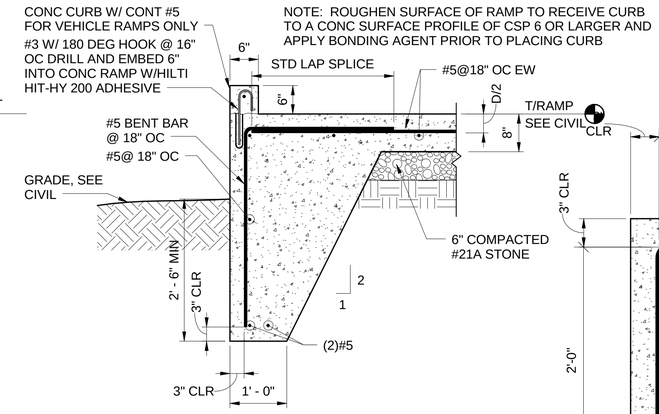

NOTE: ROUGHEN SURFACE OF RAMP TO RECEIVE CURB TO A CONC SURFACE PROFILE OF CSP 6 OR LARGER AND APPLY BONDING AGENT PRIOR TO PLACING CURB

C3 DETAIL - CONCRETE RAMP
SCALE: NOT TO SCALE

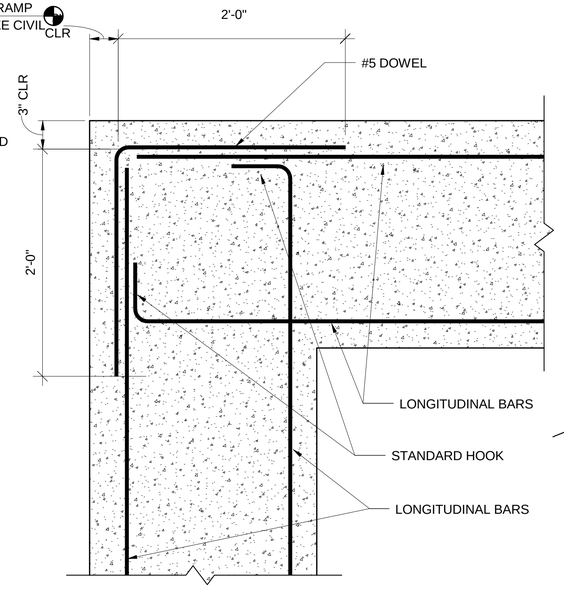

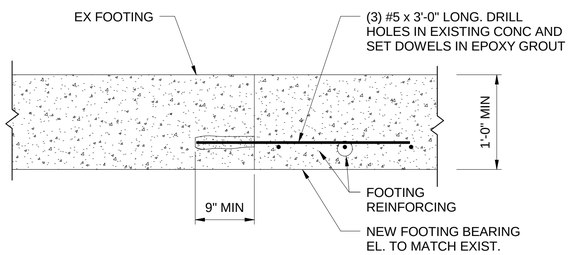

B1 DETAIL - NEW TO EXISTING FOOTING
SCALE: NOT TO SCALE

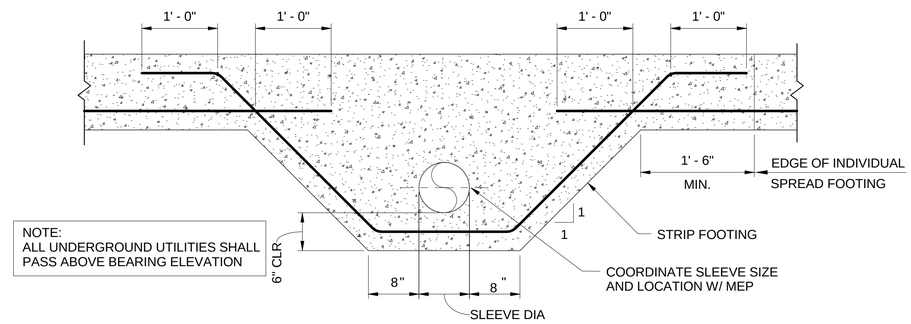

NOTE:
ALL UNDERGROUND UTILITIES SHALL PASS ABOVE BEARING ELEVATION

B2 DETAIL - UTILITY THROUGH FOOTING
SCALE: NOT TO SCALE

B4 DETAIL - REINF @ FOOTING CORNER
SCALE: NOT TO SCALE

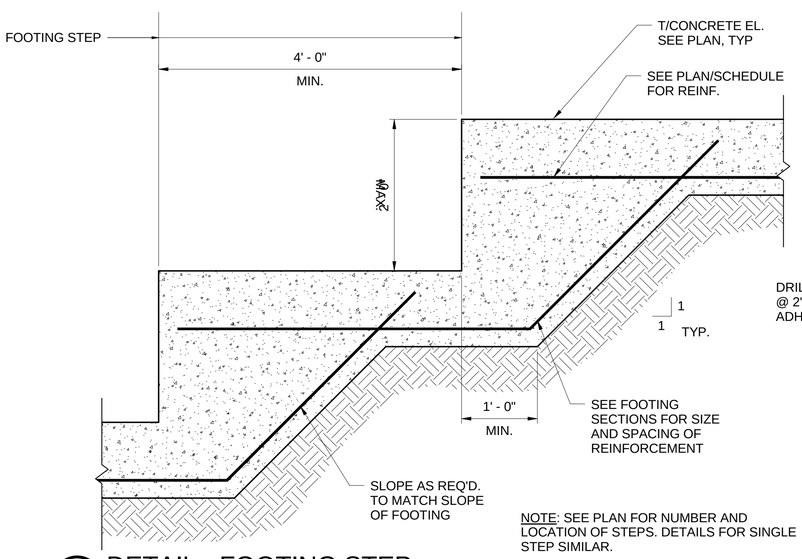

NOTE: SEE PLAN FOR NUMBER AND LOCATION OF STEPS. DETAILS FOR SINGLE STEP SIMILAR.

A1 DETAIL - FOOTING STEP
SCALE: NOT TO SCALE

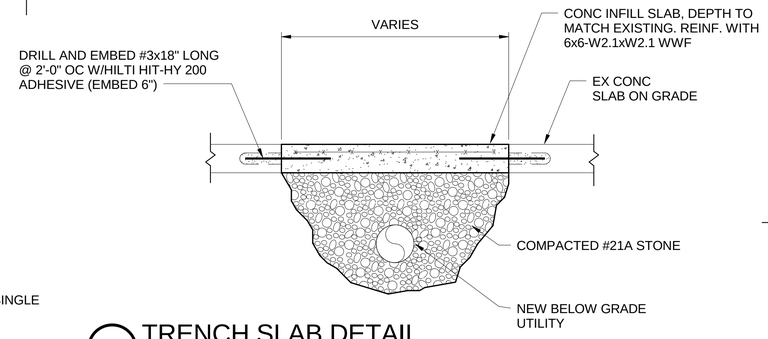

A3 TRENCH SLAB DETAIL
SCALE: NOT TO SCALE

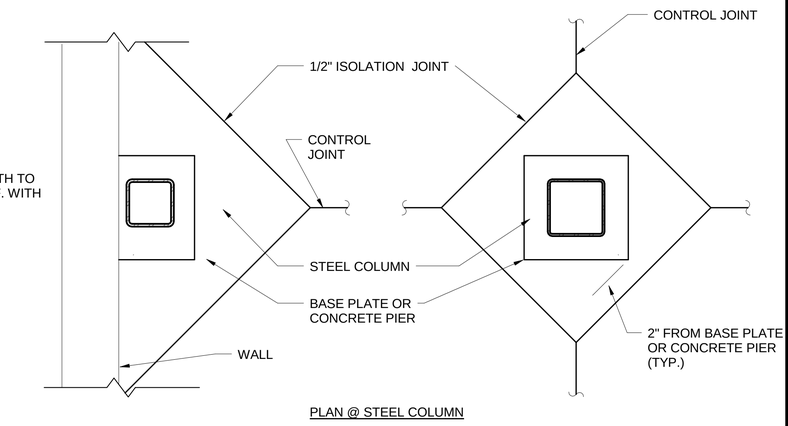

PLAN @ STEEL COLUMN

A4 DETAIL - COLUMN ISOLATION JOINT
SCALE: NOT TO SCALE

SYM	DESCRIPTION	DATE	APPR

NAVFAC

COMMONWEALTH OF VIRGINIA
SCOTT M. FRANCIS
Lic. No. 039500
3/18/16
PROFESSIONAL ENGINEER
SEAL

Wiley|Wilson | BURNS McDONNELL
JOINT VENTURE

A/E INFO

APPROVED
FOR COMMANDER NAVFAC / B.L.T.L

ACTIVITY

SATISFACTORY TO DATE

DES SMF	DRW SMF	CHK MV

PROJECT MANAGER
IPT TECH. BRANCH HEAD
CHIEF ENG/ARCH

DEPARTMENT OF THE NAVY
NAVAL FACILITIES ENGINEERING COMMAND
WEBSTER FIELD, NAS PATUXENT RIVER
NAVAL FACILITIES ENGINEERING COMMAND ~ WASHINGTON
ST. INIGOES, MD
NAVAL AIR STATION PATUXENT RIVER
ST. INIGOES, MD
BUILDING 8008 REPAIRS, ALTERATIONS AND ADDITION
TYPICAL DETAILS

SCALE: AS NOTED
EPROJECT NO. 1183080
CONSTR. CONTR. NO. N40080-15-D-0452
NAVFAC DRAWING NO. 13078329
SHEET 45 OF 180
S-501

DRAWFORM REVISION: 10 MAY 2014

FILE NAME: C:\Users\Public\Documents\Revit 2015\215135R15_S_CEN_sfrancis.rvt
REV/DATE: 5/9/2016 10:58:07 AM

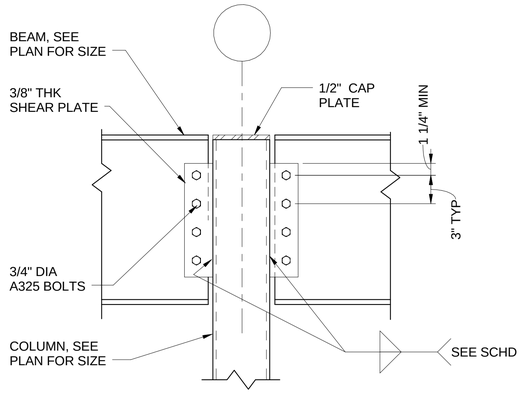

BEAM CONNECTION SCHEDULE			
NOMINAL DEPTH OF FRAMING BEAM	NO. OF BOLT ROWS	SHEAR PLATE THICKNESS	ATTACHMENT WELD (EA. SIDE)
W8,10	2	1/4"	3/16"
W12,14	3	1/4"	3/16"
W16,18	4	3/8"	1/4"
W21,24	5	3/8"	1/4"
W27	7	1/2"	5/16"

B1 DETAIL - GIRDER CONNECTION
SCALE: NOT TO SCALE

DIAPHRAGM ATTACHMENT SCHEDULE				
STORY	SUPPORT FASTENING	ATTACHMENT PATTERN	SIDE LAP FASTENING	SIDELAP SPACING
ROOF	#12 TEK SCREW	36/5	#10 TEK SCREW	12" ON CENTER

1.5 (B,F,A,VL)

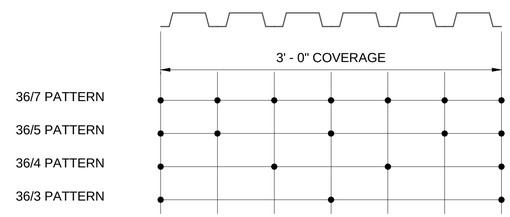

C2 DETAIL - ROOF DECK FASTENING
SCALE: NOT TO SCALE

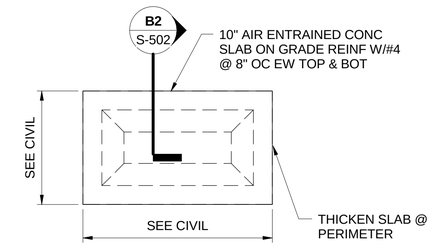

C4 DETAIL - GENERATOR/BLAST ROOM PAD
SCALE: NOT TO SCALE

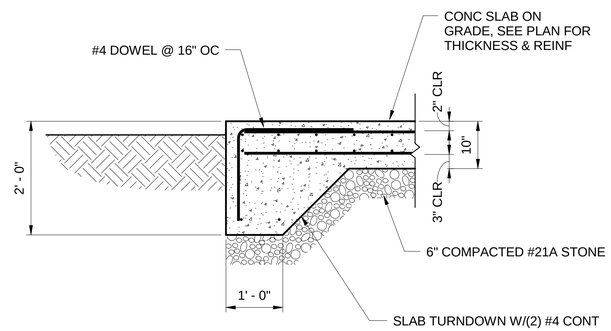

B2 DETAIL - CONCRETE PAD TURNDOWN
SCALE: NOT TO SCALE

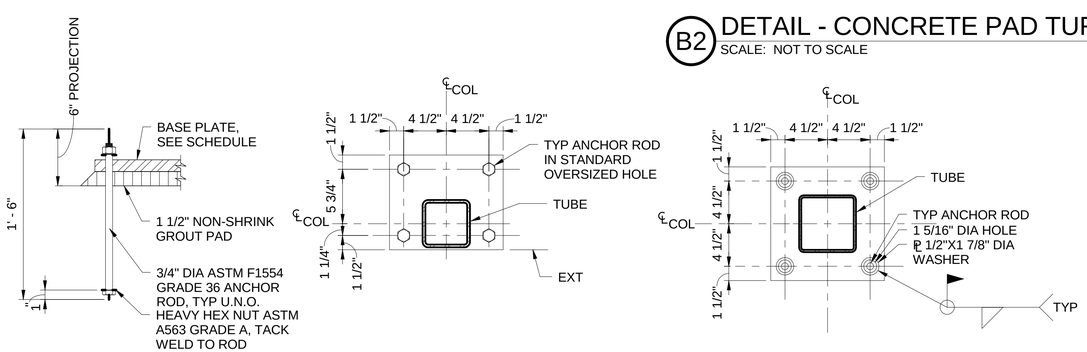

A1 DETAIL - BASEPLATE
SCALE: NOT TO SCALE

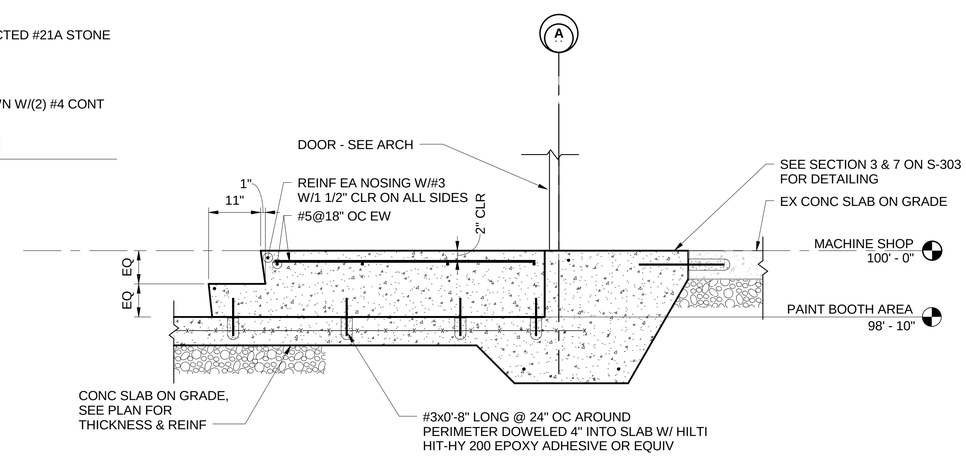

NOTE: APPLY CONCRETE BONDING AGENT TO
CONCRETE SURFACE TO RECIEVE FRESH CONCRETE

A3 DETAIL - TYPICAL INTERIOR STAIR LANDING
SCALE: NOT TO SCALE

SYM	DESCRIPTION	DATE	APPR

COMMONWEALTH OF VIRGINIA
SCOTT M. FRANCIS
Lic. No. 039500
3/18/16
PROFESSIONAL ENGINEER
SEAL

Wiley|Wilson | BURNS McDONNELL
JOINT VENTURE

A/E INFO

APPROVED
FOR COMMANDER NAVFAC / B.L.T.L

ACTIVITY

SATISFACTORY TO DATE
DES SMF | DRW WJB | CHK MV
PROJECT MANAGER
IPT TECH. BRANCH HEAD
CHIEF ENG/ARCH

DEPARTMENT OF THE NAVY
NAVAL FACILITIES ENGINEERING COMMAND
WEBSTER FIELD, NAS PATUXENT RIVER
NAVAL FACILITIES ENGINEERING COMMAND ~ WASHINGTON
ST. INIGOES, MD
NAVAL AIR STATION PATUXENT RIVER
ST. INIGOES, MD
BUILDING 8008 REPAIRS, ALTERATIONS AND ADDITION
TYPICAL DETAILS

SCALE: AS NOTED
EPROJECT NO. 1183080
CONSTR. CONTR. NO. N40080-15-D-0452
NAVFAC DRAWING NO. 13078330
SHEET 46 OF 180
S-502

DRAWFORM REVISION: 10 MAY 2014

FILE NAME: C:\Users\Public\Documents\Revit 2015\215135R15_S_CEN_sfrancis.rvt
REVDATE: 3/17/2016 1:20:24 PM

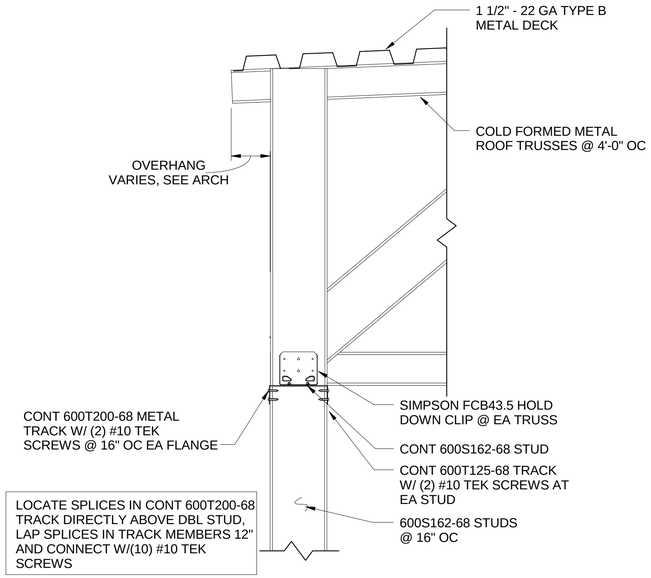

C1 CFS DISTRIBUTION MEMBER DETAIL
SCALE: NOT TO SCALE

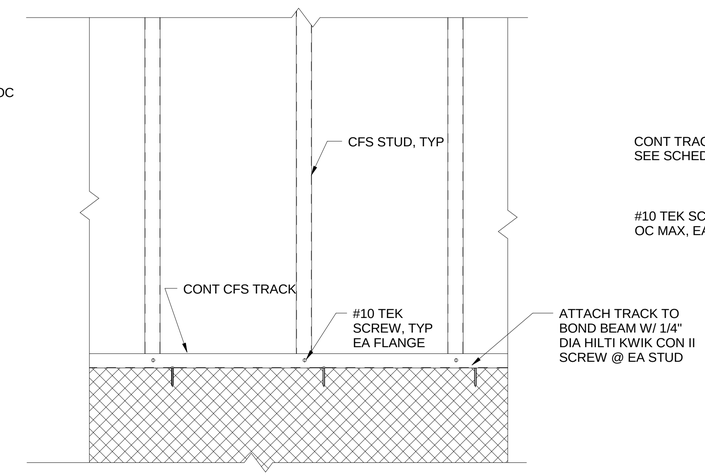

C2 CFS Wall
SCALE: NOT TO SCALE

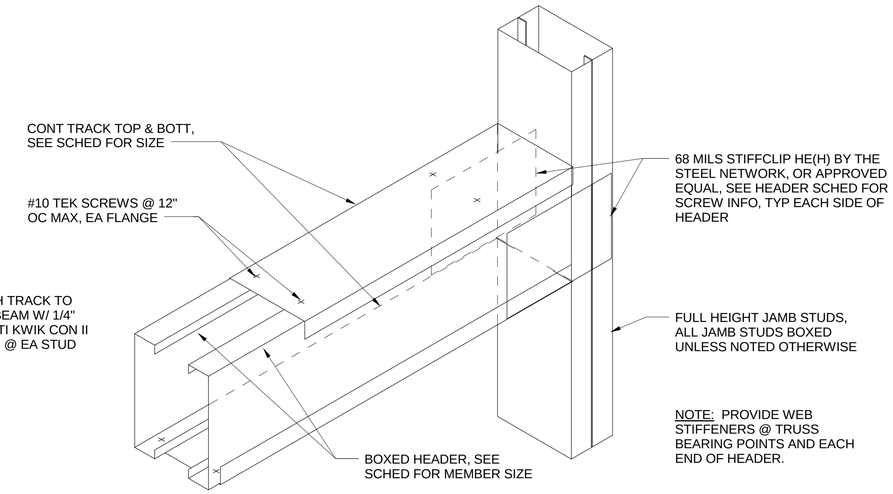

C4 CFS HEADER DETAIL
SCALE: NOT TO SCALE

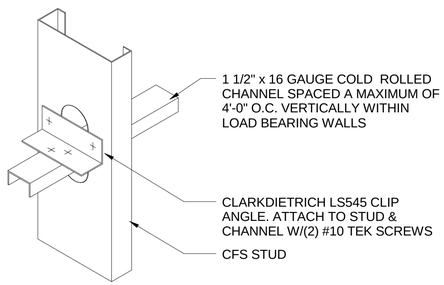

B1 CFS BRIDGING DETAIL
SCALE: NOT TO SCALE

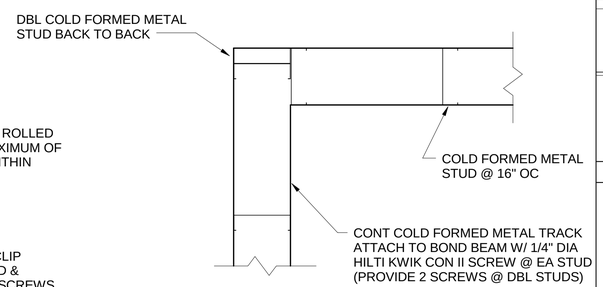

B2 CFS CORNER DETAIL
SCALE: NOT TO SCALE

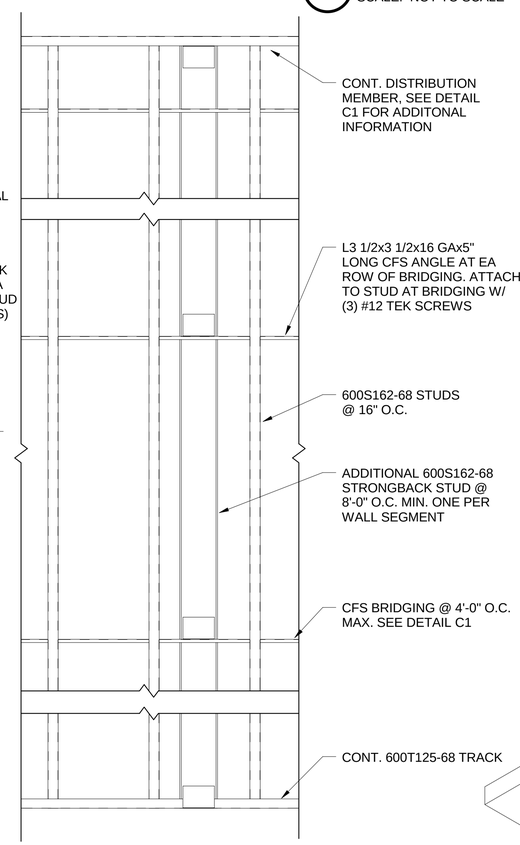

A3 STRONGBACK DETAIL
SCALE: NOT TO SCALE

CFS HEADER SCHEDULE

HEADER MARK	MAX CLEAR OPENING	BOXED HEADER		# FASTENERS HEADER TO JAMB	SILL	JAMB STUD
		MEMBER	TRACK			
H1	3'-6" OR LESS	600S162-68	600T125-68	(16) #10	600T125-68	600S162-68
H2	6'-0" OR LESS	600S162-68	600T125-68	(24) #10	600T125-68	600S162-68
H3	8'-6" OR LESS	1000S250-68	600T125-68	(32) #10	600T125-68	600S162-68
H4	8'-6" OR LESS	1000S250-97	600T125-68	(56) #10	600T125-68	600S200-97
H5	11'-8" OR LESS	1200S250-97	600T125-68	(40) #10	600T125-68	600S200-97
H6	13'-2" OR LESS	1200S250-97	600T200-68	(48) #10	600T200-68	600S200-97
H7	15'-2" OR LESS	1400S250-97	600T200-68	(48) #10	600T200-68	600S200-97

B4 CFS HEADER SCHEDULE
SCALE: NOT TO SCALE

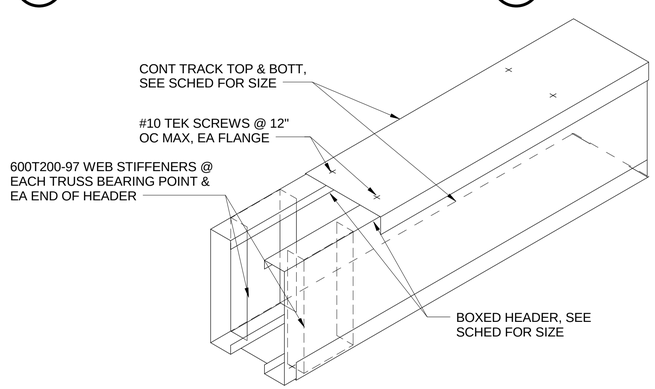

A1 CFS HEADER WEB STIFFENER
SCALE: NOT TO SCALE

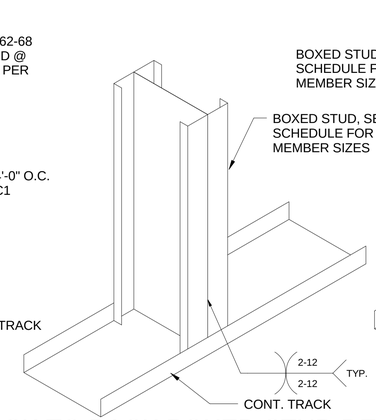

A4 BACK TO BACK BOXED STUD DETAIL
SCALE: NOT TO SCALE

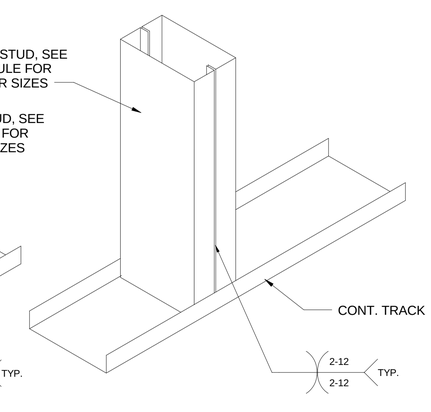

A5 BOXED STUD DETAIL
SCALE: NOT TO SCALE

SYM	DESCRIPTION	DATE	APPR

NAVFAC

COMMONWEALTH OF VIRGINIA
SCOTT M. FRANCIS
Lic. No. 039500
3/18/16
PROFESSIONAL ENGINEER
SEAL

Wiley|Wilson | BURNS McDONNELL
JOINT VENTURE

A/E INFO

APPROVED
FOR COMMANDER NAVFAC / B.L.T.L.
ACTIVITY
SATISFACTORY TO DATE
DES SMF | DRW SMF | CHK MV
PROJECT MANAGER
IPT TECH. BRANCH HEAD
CHIEF ENG/ARCH

DEPARTMENT OF THE NAVY
NAVAL FACILITIES ENGINEERING COMMAND
WEBSTER FIELD, NAS PATUXENT RIVER
NAVAL FACILITIES ENGINEERING COMMAND ~ WASHINGTON
ST. INIGOES, MD
NAVAL AIR STATION PATUXENT RIVER
ST. INIGOES, MD
BUILDING 8008 REPAIRS, ALTERATIONS AND ADDITION
CFS DETAILS

SCALE: AS NOTED
EPROJECT NO. 1183080
CONSTR. CONTR. NO. N40080-15-D-0452
NAVFAC DRAWING NO. 13078331
SHEET 47 OF 180
S-503

DRAWFORM REVISION: 10 MAY 2014

FILE NAME: C:\Users\Public\Documents\Revit 2015\215135R15_S_CEN_sfrancis.rvt
REVDATE: 3/17/2016 1:20:25 PM

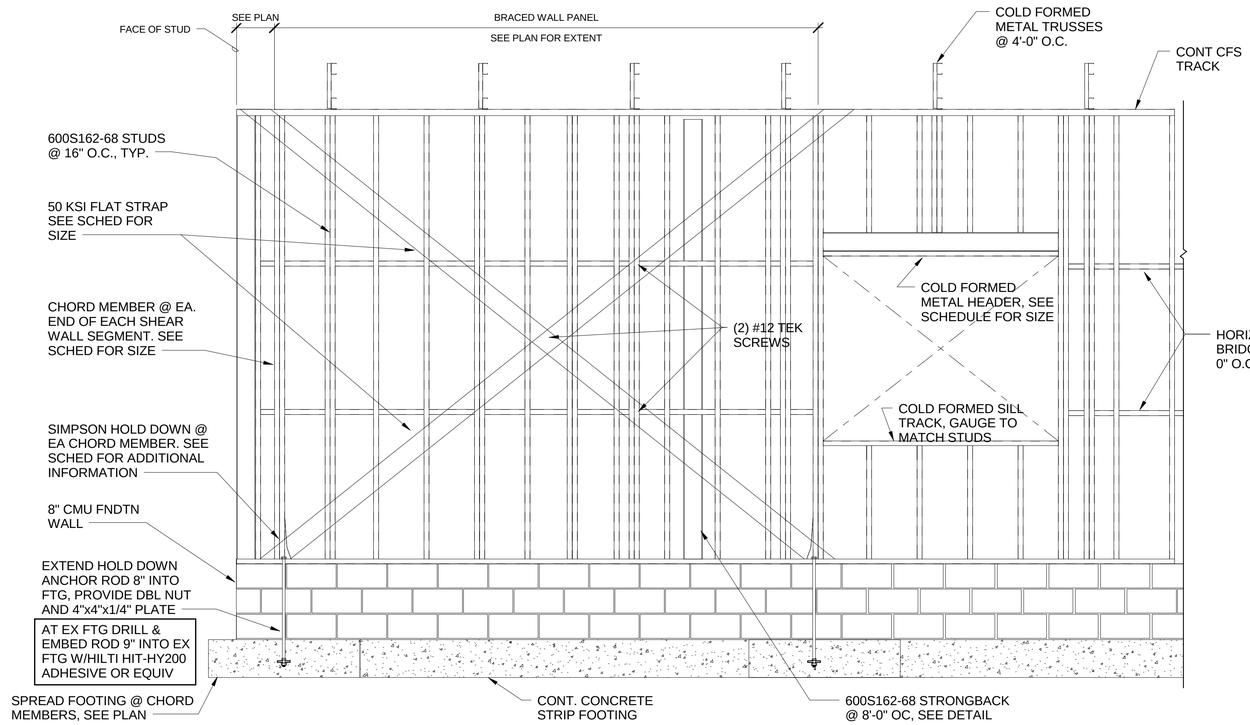

C1 CFS SHEAR WALL DETAIL - PERPENDICULAR TO TRUSSES
SCALE: NOT TO SCALE

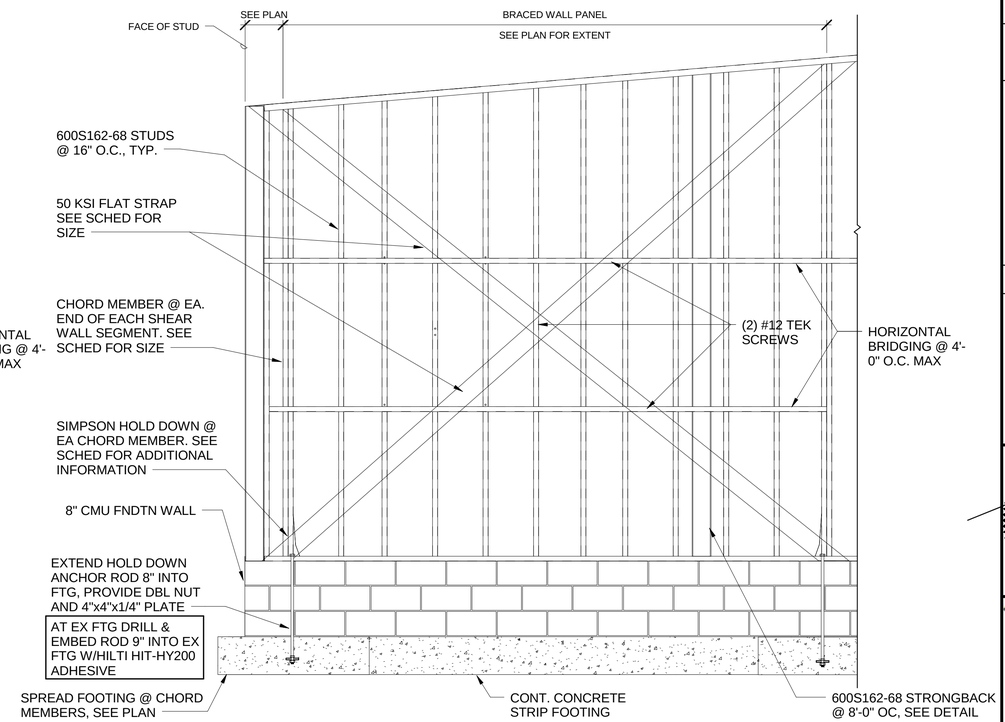

C4 CFS SHEAR WALL DETAIL - PARALLEL TO TRUSSES
SCALE: NOT TO SCALE

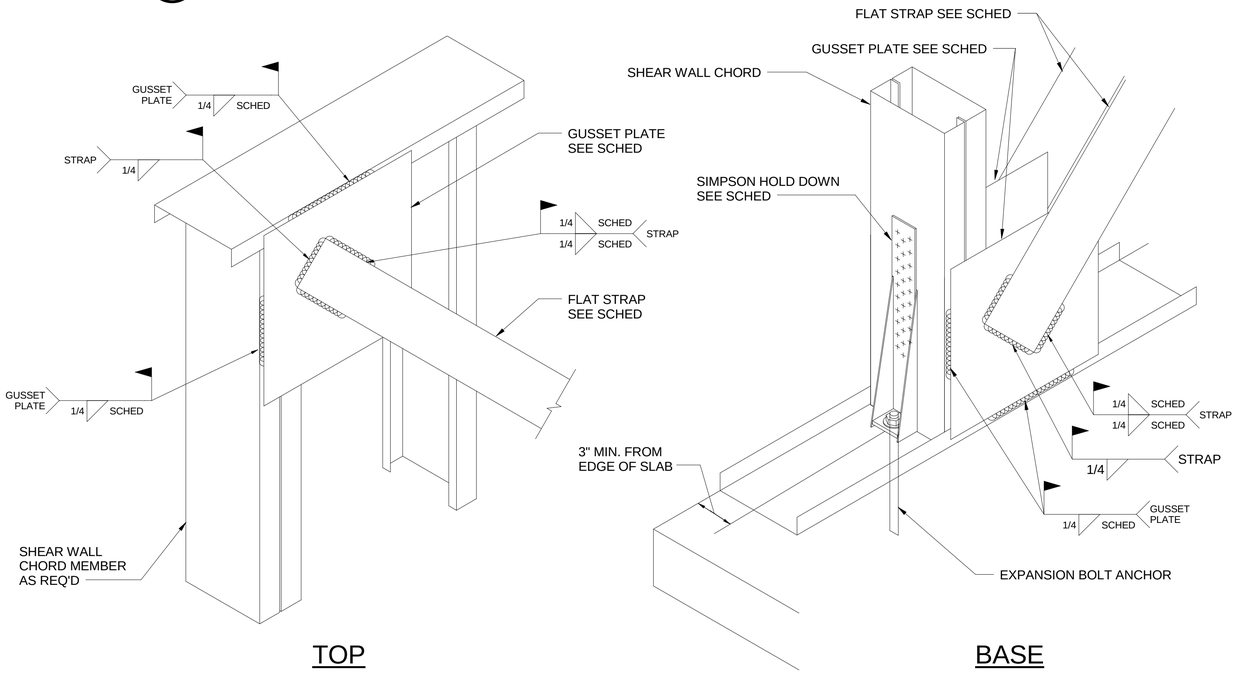

A1 SHEAR WALL CONNECTIONS
SCALE: NOT TO SCALE

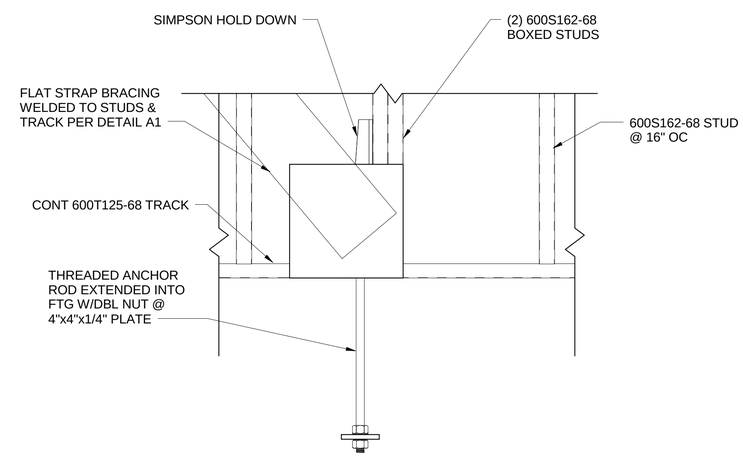

A4 CFS SHEARWALL ANCHOR DETAIL
SCALE: NOT TO SCALE

SHEAR WALL SCHEDULE

SHEAR WALL	CHORD MEMBERS	STRAPS		GUSSET PLATE	WELD LENGTH		HOLD DOWNS
		WIDTH	THICKNESS		STRAP	GUSSET	
SW-1	(2) 600S200-68 BOXED	4"	54 MILS	8x12x54 MILS	4"	6"	SIMPSON S/HD8S
SW-2	(2) 600S200-97 BOXED	4"	54 MILS	12x12x54 MILS	6"	8"	SIMPSON S/HD10S

SYM	DESCRIPTION	DATE	APPR

NAVFAC

COMMONWEALTH OF VIRGINIA
SCOTT M. FRANCIS
Lic. No. 039500
3/18/16
PROFESSIONAL ENGINEER
SEAL

Wiley|Wilson | BURNS & McDONNELL
JOINT VENTURE

A/E INFO

APPROVED
FOR COMMANDER NAVFAC / B.L.T.L.

ACTIVITY

SATISFACTORY TO DATE
DES SMF | DRW WJB | CHK MV
PROJECT MANAGER
IPT TECH. BRANCH HEAD
CHIEF ENG/ARCH

DEPARTMENT OF THE NAVY
NAVAL FACILITIES ENGINEERING COMMAND
WEBSTER FIELD, NAS PATUXENT RIVER
NAVAL FACILITIES ENGINEERING COMMAND ~ WASHINGTON
ST. INIGOES, MD
NAVAL AIR STATION PATUXENT RIVER
ST. INIGOES, MD
BUILDING 8008 REPAIRS, ALTERATIONS AND ADDITION
SHEAR WALL DETAILS

SCALE: AS NOTED
EPROJECT NO. 1183080
CONSTR. CONTR. NO. N40080-15-D-0452
NAVFAC DRAWING NO. 13078332
SHEET 48 OF 180
S-504

DRAWFORM REVISION: 10 MAY 2014

FILE NAME: C:\Users\Public\Documents\Revit 2015\215135R15_S_CEN_sfrancis.rvt
REVDATE: 3/17/2016 1:20:27 PM

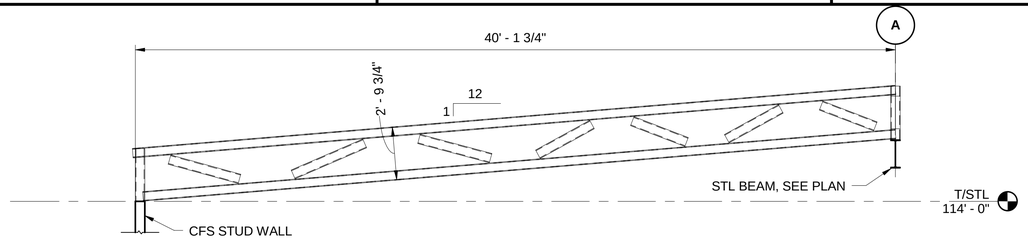

D1 TRUSS PROFILE T-1
SCALE: NOT TO SCALE

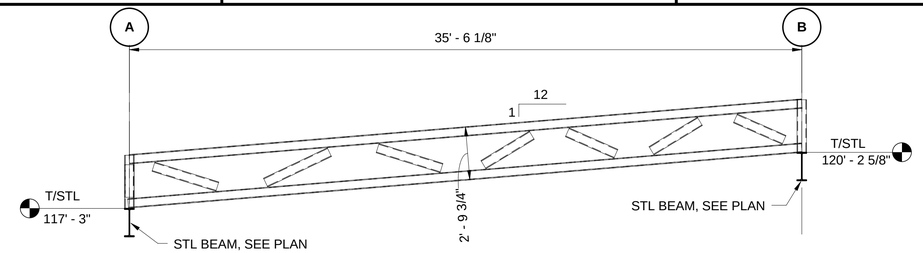

D3 TRUSS PROFILE T-2
SCALE: NOT TO SCALE

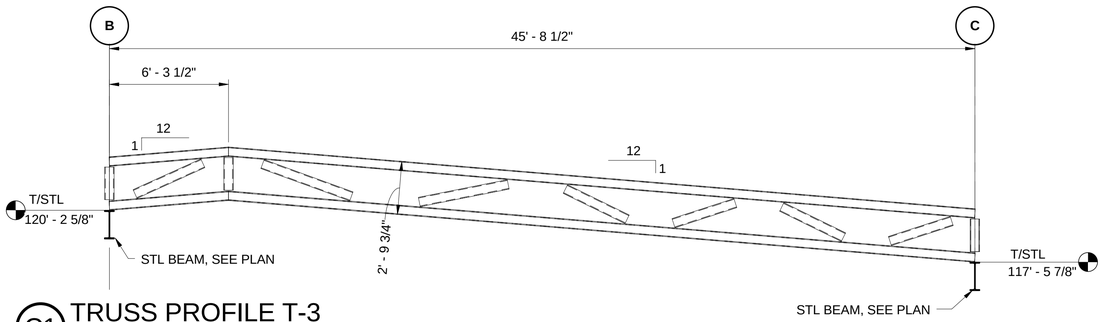

C1 TRUSS PROFILE T-3
SCALE: NOT TO SCALE

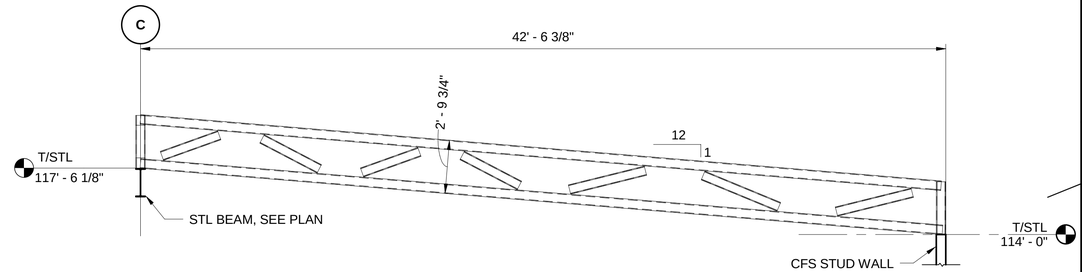

C3 TRUSS PROFILE T-4
SCALE: NOT TO SCALE

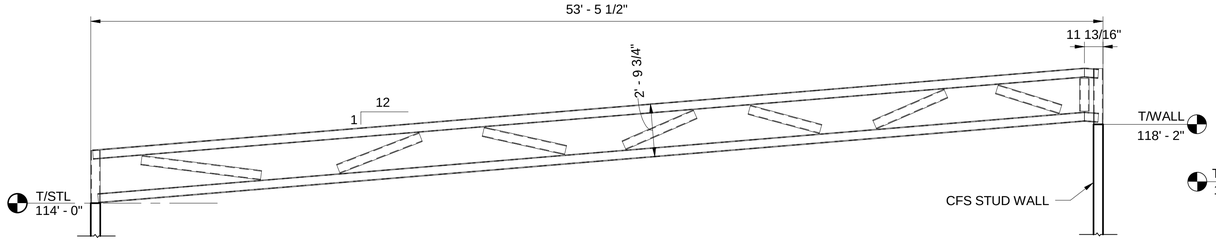

B1 TRUSS PROFILE T-5
SCALE: NOT TO SCALE

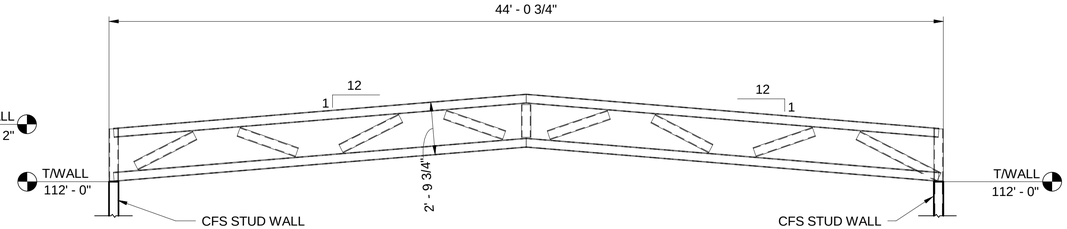

B3 TRUSS PROFILE T-7
SCALE: NOT TO SCALE

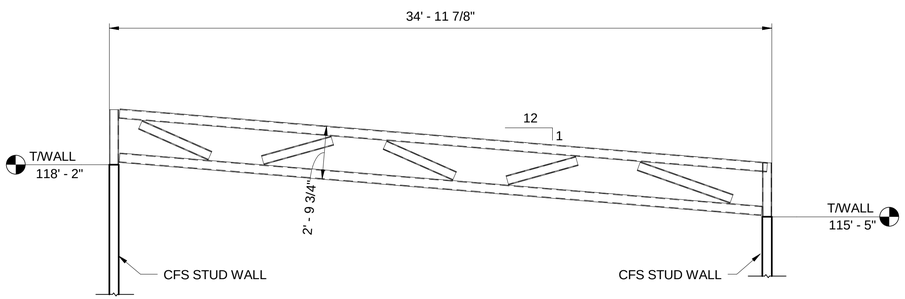

A1 TRUSS PROFILE T-6
SCALE: NOT TO SCALE

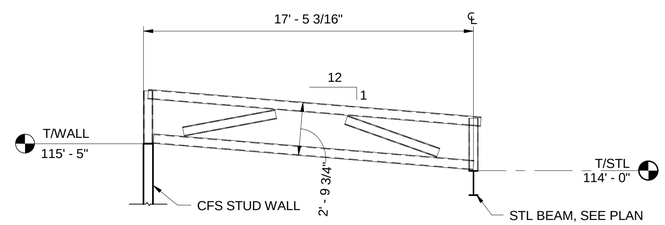

A4 TRUSS PROFILE T-7
SCALE: NOT TO SCALE

SYM	DESCRIPTION	DATE	APPR

NAVFAC

COMMONWEALTH OF VIRGINIA
SCOTT M. FRANCIS
Lic. No. 039500
3/18/16
PROFESSIONAL ENGINEER
SEAL

Wiley|Wilson | BURNS McDONNELL
JOINT VENTURE

A/E INFO.

APPROVED
FOR COMMANDER NAVFAC / B.L.T.L.

ACTIVITY
SATISFACTORY TO DATE

DES SMF	DRW SMF	CHK MV

PROJECT MANAGER
IPT TECH. BRANCH HEAD
CHIEF ENG/ARCH

DEPARTMENT OF THE NAVY
NAVAL FACILITIES ENGINEERING COMMAND
WEBSTER FIELD, NAS PATUXENT RIVER
NAVAL FACILITIES ENGINEERING COMMAND ~ WASHINGTON
ST. INIGOES, MD
NAVAL AIR STATION PATUXENT RIVER
ST. INIGOES, MD

BUILDING 8008 REPAIRS, ALTERATIONS AND ADDITION

TRUSS PROFILES

SCALE: AS NOTED
EPROJECT NO. 1183080
CONSTR. CONTR. NO. N40080-15-D-0452
NAVFAC DRAWING NO. 13078333
SHEET 49 OF 180

S-505

DRAWFORM REVISION: 10 MAY 2014

FILE NAME: C:\Users\Public\Documents\Revit 2015\215135R15_S_CEN_sfrancis.rvt
REVDATE: 3/17/2016 1:20:27 PM

CALL OUT IDENTIFICATION

SECTION, DETAIL, AND ELEVATION SYMBOL IDENTIFIERS:

LETTER AND NUMBER DESIGNATOR FOR GRID COORDINATE

ONE OR TWO CHARACTER DISCIPLINE DESIGNATOR (MAY NOT BE PRESENT IF CALLOUT AND TITLE ARE ON DRAWINGS WITHIN THE SAME DISCIPLINE)

DRAWING SEQUENCE NUMBER INDICATES WHERE TITLE IS LOCATED (MAY NOT BE PRESENT IF CALLOUT AND TITLE ARE ON THE SAME DRAWING)

A# G-000 SIM

SECTION CALLOUT EXAMPLE:

A# G-000

DETAIL CALLOUT EXAMPLE:

A# G-000 SIM

ELEVATION CALLOUT EXAMPLE:

A# A# A-101 A# A# — INTERIOR

A# A-201 — EXTERIOR

PLAN TITLE EXAMPLE:

PLAN NORTH

VIEW NAME
SCALE: 1/8" = 1'-0"

SECTION, DETAIL, AND ELEVATION TITLE EXAMPLE:

XX VIEW NAME
SCALE: 1/8" = 1'-0"

1 A101 VIEW NAME
SCALE: 1/8" = 1'-0"

NORTH ARROW EXAMPLE:

PLAN NORTH — BUILDING

N — CIVIL/SITE

GRAPHIC SCALE EXAMPLE:

GRAPHIC SCALE:

1/8" =1'-0" 0' 4' 8' 16'

PLAN LEGEND

PLAN LEGEND:

- EXISTING DOOR
- NEW DOOR
- EXISTING WALL
- NEW WALL (RE: PARTITION TYPE)
- ROOM NAME — ROOM NAME
- 101 — ROOM NUMBER
- 1i — PARTITION TYPE
- 888W — DOOR NUMBER
- CW0 — WINDOW WALL TYPE
- CW0 — CURTAIN WALL TYPE
- 00 — GLAZING TYPE
- L1 — LOUVER TAG
- 1 — GRID BUBBLE AND LINE
- T1 — TOILET ACCESSORY TAG
- WORK W101 — FURNITURE SYSTEM TAG
- 1' - 0" A.F.F. — CEILING HEIGHT TAG

DEMOLITION/EXISTING PLAN LEGEND

- EXISTING DOOR
- DOOR TO BE REMOVED
- EXISTING WALL
- WALL TO BE REMOVED
- AREA OF DEMOLITION

MATERIAL SYMBOLS

- UNDISTURBED EARTH
- COMPACTED FILL
- GRAVEL
- GRASS
- FACE BRICK
- MASONRY
- CONCRETE MASONRY UNIT
- CONCRETE
- TERRAZZO
- RIGID INSULATION
- PLYWOOD
- GROUT OR GYPSUM BOARD
- SAND, PLASTER, OR PORTLAND CEMENT
- STEEL OR FERROUS METALS
- ALUMINUM OR NON-FERROUS METALS
- FINISHED WOOD
- PARTICLE BOARD
- GLUED-LAMINATED WOOD
- PLASTIC LAMINATE
- BATT INSULATION
- METAL STUD WALL
- BACKER ROD AND SEALANT
- DIMENSION LUMBER

ABBREVIATIONS

SEE ADDITIONAL FINISH MATERIAL ABBREVIATIONS IN THE MATERIAL LEGEND, DRAWING AXXX

	-A-
A/E	ARCHITECT/ENGINEER
ACOUST	ACOUSTICAL
ADJ	ADJACENT, ADJUSTABLE
AFF	ABOVE FINISH FLOOR
AHJ	AUTHORITY HAVING JURISDICTION
ALT	ALTERNATE
ALUM	ALUMINUM
APPROX	APPROXIMATE
ARCH	ARCHITECTURE, ARCHITECT
	-B-
BD	BOARD
BITUM	BITUMINOUS
BLDG	BUILDING
BLKG	BLOCKING
BO	BOTTOM OF, AS IN "BO STEEL"
BTWN	BETWEEN
	-C-
CAB	CABINET
CID	COMPREHENSIVE INTERIOR DESIGN
CJ	CONTROL JOINT, CONSTRUCTION JOINT
CL	CENTER LINE
CLG	CEILING
CLR	CLEAR
CMU	CONCRETE MASONRY UNIT
COL	COLUMN
COMM	COMMUNICATION
CONC	CONCRETE
CONSTR	CONSTRUCTION
CONT	CONTINUOUS
CONTR	CONTRACT, CONTRACTOR
COORD	COORDINATE
CORR	CORRUGATED OR CORRIDOR
CU	CUBIC
	-D-
DBL	DOUBLE
DEMO	DEMOLITION
DESCR	DESCRIPTION
DET	DETAIL
DIA	DIAMETER
DIAG	DIAGONAL
DIM	DIMENSION
DN	DOWN
DR	DOOR
DS	DOWNSPOUT
DWG	DRAWING
	-E-
E	EAST
EA	EACH
EEW	EMERGENCY EYEWASH
EEWS	EMERGENCY EYEWASH & SHOWER
EF	EXHAUST FAN
EJ	EXPANSION JOINT
EL	ELEVATION, AS IN HEIGHT
ELAST	ELASTOMERIC
ELEC	ELECTRIC / ELECTRICAL
ELEV	ELEVATOR, OR ELEVATION AS IN NORTH ELEV
EQ	EQUAL
EQUIP	EQUIPMENT
ETC	AND SO FORTH (ETCETERA)
EW	EACH WAY
EWC	ELECTRIC WATER COOLER
EXH	EXHAUST
EXIST	EXISTING
EXP	EXPANSION
EXT	EXTERIOR
	-F-
FD	FLOOR DRAIN
FDN	FOUNDATION
FE	FIRE EXTINGUISHER WITH WALL BRACKET
FEC	FIRE EXTINGUISHER CABINET
FF	FINISH FLOOR
FF&E	FURNITURE, FIXTURES & EQUIPMENT
FHC	FIRE HOSE CABINET (WITH EXTINGUISHER & BRACKET)
FHR	FIRE HOSE REEL (WITH EXTINGUISHER & BRACKET)
FIN	FINISHED, FINISH
FLR	FLOOR
FT	FEET / FOOT
	-G-
GA	GAUGE
GALV	GALVANIZED
GL	GIRT LINE
GRTG	GRATING
GYP	GYPSUM
GYP BD	GYPSUM BOARD
	-H-
H	HIGH
HD	HAND
HDWR	HARDWARE
HM	HOLLOW METAL
HORIZ	HORIZONTAL
HT	HEIGHT
HVAC	HEATING, VENTILATION & AIR CONDITIONING
	-I-
ID	INSIDE DIAMETER
IN	INCH
INSUL	INSULATION
INT	INTERIOR
	-J-
JAN	JANITOR'S CLOSET

	-L-
L	LEFT, LONG, LENGTH
LAB	LABORATORY
LAT	LATITUDE
LAV	LAVATORY
LB or #	POUND
LH	LEFT HAND
LONG	LONGITUDE
LVR	LOUVER
	-M-
M	METER
MACH	MACHINE
MAINT	MAINTENANCE
MAS	MASONRY
MATL	MATERIAL
MAX	MAXIMUM
MECH	MECHANICAL
MFR	MANUFACTURER
MIN	MINIMUM
MISC	MISCELLANEOUS
MM	MILLIMETER
MO	MASONRY OPENING
MTD	MOUNTED
MTL	METAL
	-N-
N	NORTH
N/A	NOT APPLICABLE
NIC	NOT IN CONTRACT
NO	NUMBER
NOM	NOMINAL
NTP	NOTICE TO PROCEED
NTS	NOT TO SCALE
	-O-
OC	ON CENTER
OD	OUTSIDE DIAMETER
OFF	OFFICE
OPNG	OPENING
OPP	OPPOSITE
	-P-
PA	PUBLIC ADDRESS
PERIM	PERIMETER
PKG	PACKAGE
PL	PLATE
PLMB	PLUMBING
PLYWD	PLYWOOD
PROJ	PROJECT
PSF	POUNDS PER SQUARE FOOT
PSI	POUNDS PER SQUARE INCH
PVC	POLYVINYL CHLORIDE
	-R-
R	RADIUS
R/A	RETURN AIR
RCP	REFLECTIVE CEILING PLAN
RD	ROOF DRAIN
RECP	RECEPTACLE
REFER	REFERENCE
REINF	REINFORCED
REQ'D	REQUIRED
REV	REVISION
RH	RIGHT HAND
RO	ROUGH OPENING
	-S-
S	SOUTH
S/A	SUPPLY AIR
SCHED	SCHEDULE
SECT	SECTION
SF	SQUARE FOOT
SID	STRUCTURAL INTERIOR DESIGN
SIM	SIMILAR
SPEC	SPECIFICATION
SQ	SQUARE, AS IN "SQ FT"
STC	SOUND TRANSMISSION COEFFICIENT
STD	STANDARD
STOR	STORAGE
STRUCT	STRUCTURAL
SUPP	SUPPORT
SUSP	SUSPENDED
SYS	SYSTEM
	-T-
TD	TRENCH DRAIN
TECH	TECHNICAL
THRU	THROUGH
TLT	TOILET
TO	TOP OF, AS IN "TO STEEL"
TYP	TYPICAL
	-U-
UL	UNDERWRITERS LABORATORY
UNO	UNLESS NOTED OTHERWISE
UTIL	UTILITY
	-V-
VENT	VENTILATE, VENTILATOR
VERT	VERTICAL
VOL	VOLUME
	-W-
W	WEST, WIDTH
W/	WITH
W/O	WITHOUT
WC	WATER CLOSET
WD	WOOD
WH	WATER HEATER
WT	WEIGHT

GENERAL NOTES

1. ALL WORK SHALL COMPLY WITH ALL APPLICABLE CODES AND STANDARDS AS LISTED OR REFERENCED ON LIFE SAFETY PLAN AND LIFE SAFETY CRITERIA OR AS REQUIRED BY THE AUTHORITY HAVING JURISDICTION.
2. THE CONTRACTOR SHALL INCLUDE ALL WORK REQUIRED TO COMPLY WITH ALL APPLICABLE CODES AND STANDARDS AS LISTED OR REFERENCED ON LIFE SAFETY PLAN AND LIFE SAFETY CRITERIA OR AS REQUIRED BY THE AUTHORITY HAVING JURISDICTION.
3. DIMENSIONS SHALL GOVERN. DETAILS SHALL GOVERN OVER PLANS AND ELEVATIONS. LARGE SCALE DETAILS OR PLANS SHALL GOVERN OVER SMALL SCALE DETAILS OR PLANS. DO NOT SCALE DRAWINGS.
4. THE GENERAL CONTRACTOR SHALL PROVIDE AND INSTALL ALL EXIT SIGNS, EMERGENCY LIGHTING SYSTEMS, ALARM SYSTEMS, FIRE EXTINGUISHERS AND AUTOMATIC SPRINKLER SYSTEMS AS REQUIRED BY APPLICABLE CODES AND STANDARDS OR AS REQUIRED BY THE AUTHORITY HAVING JURISDICTION.
5. ALL FLOORS SHALL BE INSPECTED FOR DAMAGE, WARPING OR OTHER NOTICEABLE DEVIATIONS AND PATCHED AND LEVELED PRIOR TO COVERING WITH FLOOR FINISHES, INSTALLATION OF ACCESS FLOOR SYSTEM, OR ERECTION AND INSTALLATION OF COLD-FORMED FRAMING.
6. THE GENERAL CONTRACTOR SHALL BE RESPONSIBLE FOR PROVIDING ALL MANUFACTURER'S RECOMMENDED MAINTENANCE PROCEDURES AND SCHEDULES.
7. ANY MANUFACTURER'S OR BRAND NAME PRODUCTS INDICATED OR SPECIFIED ARE DONE SO TO ESTABLISH A MINIMUM LEVEL OF QUALITY.
8. ALL CONSTRUCTION SHALL MEET OR EXCEED LOCAL INDUSTRY STANDARDS. DETAILS ARE PROVIDED TO INDICATE MINIMUM QUALITY AND TO GIVE STANDARDS OF CONSTRUCTION. IF A CONDITION IS NOT SPECIFICALLY DETAILED, SUBMIT A SIMILAR DETAIL FOR GUIDE AND APPROVAL.
9. THE LETTERS I, O, AND Q ARE NOT USED TO INDICATE DETAILS, SECTIONS OR ELEVATIONS.
10. PROVIDE PRESERVATIVE-TREATED WOOD AT ALL LOCATIONS WHERE WOOD IS IN DIRECT CONTACT WITH CONCRETE OR MASONRY.
11. PROVIDE 3/4" FIRE-RETARDANT TREATED PLYWOOD BACKING AT ALL ELECTRICAL, PHONE, AND SECURITY SYSTEM PANELS.
12. PROVIDE FIRE-RESISTANT TREATED WOOD BLOCKING FOR SECURE ANCHORAGE OF ALL SHELVES, RUNNING TRIM, RAILINGS, SUSPENDED ITEMS, DOOR-STOPS, GRAB-BARS, AND OTHER SIMILAR WOODWORK, HARDWARE, SPECIALTIES, ACCESSORIES, FIXTURES, OR EQUIPMENT.
13. PROVIDE CEMENT BOARD SHEATHING AT ALL AREAS WHERE A TILE SURFACE IS TO BE INSTALLED ON METAL STUD WALLS.
14. PROVIDE WATER-RESISTANT GYPSUM BOARD AT ALL WET OR UNCONDITIONED AREAS INCLUDING, BUT NOT LIMITED TO, RESTROOM WALLS AND CEILINGS AND JANITOR CLOSET WALLS AND CEILINGS. CONTRACTOR TO INSURE THAT FIRE RATING IS MAINTAINED.
15. PAINT, STAIN, OR COAT ALL EXPOSED SURFACES OF CONSTRUCTION UNLESS NOTED OTHERWISE OR IF SURFACES ARE PRE-FINISHED.
16. ALL OPENING DIMENSIONS ARE NOMINAL. THE CONTRACTOR SHALL FIELD MEASURE ALL OPENINGS AND COORDINATE WITH THE APPROPRIATE SUPPLIER FOR ALL DOORS AND WINDOWS.
17. ALL CONDUITS, PLUMBING, PIPING, DUCTWORK, AND OTHER EQUIPMENT EXPOSED TO VIEW SHALL BE LOCATED PARALLEL OR PERPENDICULAR TO THE STRUCTURAL FRAMING SYSTEM.
18. PROVIDE GALVANIC PROTECTION BETWEEN DISSIMILAR MATERIALS, WHERE REQUIRED.
19. CERAMIC TILE TO BE INSTALLED UP TO 4'-0" ABOVE FINISH FLOOR AND 1'-0" TO EITHER SIDE AT ALL MOP SINK LOCATIONS. PORCELAIN TILE TO BE INSTALLED UP TO 5'-0" ABOVE FINISHED FLOOR AT RESTROOMS AND TO UNDERSIDE OF CEILING AT SHOWER LOCATIONS. EXTENT OF TILE VARIES BY LOCATION.
20. ARCHITECTURAL DETAILS ARE APPLICABLE WHERE INDICATED BY SECTION CUT, BY NOTE, OR BY DETAIL TITLE. INCORPORATE SIMILAR DETAILS AT SIMILAR CONDITIONS UNLESS NOTED OTHERWISE. THE CONTRACTOR MAY REQUEST A CLARIFICATION IF REQUIRED, OTHERWISE THE MORE STRINGENT REQUIREMENTS SHALL CONTROL.
21. PROVIDE FIRE-STOPPING SYSTEMS AT TOP OF AND AT ALL PENETRATIONS THROUGH FIRE-RATED PARTITIONS.
22. SEAL ALL EXTERIOR BUILDING JOINTS AT BOTH THE EXTERIOR AND INTERIOR SURFACES AGAINST MOISTURE AND AIR INFILTRATION.
23. SEAL AROUND ALL DOOR AND WINDOW FRAMES, COUNTERTOPS, WALL-MOUNTED FIXTURES AND EQUIPMENT TO ADJACENT WALL SURFACES.
24. THE CONTRACTOR SHALL REVIEW THE DIMENSIONS OF ALL EQUIPMENT IN THE PROJECT REGARDLESS OF THE SOURCE AND COORDINATE ACCESS TO THE SPACE AND VERIFY CLEAR FLOOR SPACE IS PROVIDED AS REQUIRED TO ENSURE EASE OF INSTALLATION.
25. ALL WORK MUST BE OF GOOD QUALITY, FREE FROM DEFECTS, AND IN ACCORDANCE WITH THE REQUIREMENTS OF THE CONTRACT DOCUMENTS.
26. THE CONTRACTOR IS RESPONSIBLE FOR THE COORDINATION OF ALL PENETRATIONS IN THE STRUCTURE FOR THE PROPER INSTALLATION OF THE WORK. REFER TO STRUCTURAL DRAWINGS FOR SECONDARY FRAMING AND OR REINFORCING REQUIRED AT PENETRATIONS IN STEEL, CONCRETE OR MASONRY.
27. THE CONTRACTOR SHALL PROVIDE ACCESS DOORS OR PANELS AS REQUIRED FOR SERVICING OF PIPING, DUCTWORK, CABLE TRAYS, FIRE DAMPERS AND SIMILAR APPLICATIONS. ALL PROPOSED ACCESS DOOR LOCATIONS TO BE SUBMITTED FOR APPROVAL PRIOR TO INSTALLATION.
28. PROVIDE ALL HVAC, PLUMBING, GAS OR ELECTRIC SERVICE CONNECTIONS TO CASEWORK, FIXTURES, SIGNAGE, OR EQUIPMENT INDICATED (WHETHER UNITS ARE INSTALLED BY CONTRACTOR OR BY OTHERS). PROVIDE COMPLETE POWER AND COMMUNICATIONS CONNECTIONS AT ALL GOV'T PROVIDED WORKSTATIONS.
29. BRACE PARTITIONS, SUSPENDED CEILINGS, SOFFITS, SUSPENDED ITEMS, ETC. ONLY TO STRUCTURAL ELEMENTS ABOVE. DO NOT ANCHOR TO ROOF DECK, PLUMBING / SPRINKLER PIPES, DUCTWORK, ELECTRICAL CONDUIT OR SIMILAR ELEMENTS.
30. EXTEND ALL FLOORING AND WALL-BASE COMPLETELY INTO RECESSES, UNDER OPEN COUNTERTOPS, AND BEHIND ALL EQUIPMENT.
31. ALL MATERIALS USED FOR CONSTRUCTION SHALL BE NEW AND UNDAMAGED. THE CONTRACTOR SHALL SUBMIT SHOP DRAWINGS FOR ALL WORK SHOWN.
32. THE CONTRACTOR SHALL BECOME FULLY ACQUAINTED WITH CONDITIONS RELATED TO THE WORK. ANY DISCREPANCIES BETWEEN THE DRAWINGS AND THE ACTUAL CONDITIONS SHALL BE REPORTED TO THE DESIGN PROFESSIONALS FOR RESOLUTION PRIOR TO PROCEEDING WITH THE WORK.
33. DRAWINGS CONTAINED IN THIS SET SHALL NOT BE REPRODUCED FOR SHOP DRAWINGS. COPIES OF THESE DRAWINGS SUBMITTED AS SHOP DRAWINGS WILL BE REJECTED AND RETURNED TO THE CONTRACTOR.
34. EACH INSTALLER MUST EXAMINE SUBSTRATE AND/OR CONDITIONS UNDER WHICH THE WORK WILL BE INSTALLED AND REPORT TO THE CONTRACTOR IN WRITING ANY CONDITIONS DETRIMENTAL TO THE PROPER AND TIMELY EXECUTION OF THE INSTALLERS WORK. DO NOT PROCEED UNTIL UNSATISFACTORY CONDITIONS ARE CORRECTED. INSTALLATION SHALL CONSTITUTE ACCEPTANCE OF THE SUBSTRATE AND/OR CONDITIONS.
35. "TYPICAL" (TYP) AS USED IN THESE DOCUMENTS SHALL MEAN THAT THE CONDITIONS OR DIMENSION IS THE SAME OR REPRESENTATIVE FOR SIMILAR CONDITIONS THROUGHOUT.
36. CONTROL JOINTS (CJ) SHALL BE INSTALLED AT ALL PARTITIONS. CJ AT GYPSUM PARTITIONS SHALL BE MAXIMUM 30'-0" O.C., CJ AT CONCRETE MASONRY UNIT PARTITIONS SHALL BE MAXIMUM 20'-0" O.C., UNLESS OTHERWISE NOTED ON DRAWINGS. REFER TO ELEVATION DRAWINGS FOR EXTERIOR CONTROL JOINT LOCATIONS. REVIEW CJ LOCATIONS WITH ARCHITECT PRIOR TO INSTALLATION.
37. NON-BEARING PARTITIONS SHALL BE ISOLATED FROM THE BUILDING STRUCTURE TO PREVENT TRANSFER OF BUILDING LOADS FROM THE STRUCTURE TO THE PARTITIONS.
38. PRIOR TO BEGINNING ANY WORK, NOTIFY OWNER OF ANY EXISTING MATERIALS OBSERVED TO POSSIBLY CONTAIN ASBESTOS AND/OR LEAD PAINT.
39. REMOVE ABANDONED PIPE, DUCTS, CONDUITS, AND EQUIPMENT INCLUDING THOSE ABOVE ACCESSSIBLE CEILINGS BACK TO THE SOURCE OF SUPPLY WHERE POSSIBLE. WHERE NOT POSSIBLE CAP, STUB, AND TAG WITH IDENTIFICATION. PATCH HOLES LEFT BY REMOVAL USING MATERIALS SPECIFIED FOR NEW CONSTRUCTION.
40. REMOVE EXISTING WORK AS INDICATED AND AS REQUIRED TO ACCOMPLISH NEW WORK.
41. WHERE EXISTING FINISHED SURFACES ARE CUT SO THAT A SMOOTH TRANSITION WITH NEW WORK IS NOT POSSIBLE, TERMINATE EXISTING SURFACE ALONG A STRAIGHT LINE AT A NATURAL LINE OF DIVISION AND MAKE RECOMMENDATION TO ARCHITECT.
42. PROTECT EXISTING WORK TO REMAIN. PERFORM CUTTING TO ACCOMPLISH REMOVALS NEATLY AND AS SPECIFIED FOR CUTTING NEW WORK. REPAIR ADJACENT CONSTRUCTION AND FINISH DAMAGED DURING REMOVAL WORK. PATCH AS SPECIFIED FOR PATCHING NEW WORK.
43. THE CONTRACTOR IS RESPONSIBLE FOR VERIFYING THE EXTENT, NATURE, AND SCOPE OF WORK DESCRIBED IN THE CONTRACT DOCUMENTS AND COORDINATING WITH THE OWNER OR HIS/HER REPRESENTATIVE THE INTERFACING OF THE EXISTING BUILDING AND THE WORK SHOWN AND DESCRIBED IN THESE CONTRACT DOCUMENTS.
44. ALL "EXISTING" INFORMATION ON THE CONTRACT DOCUMENTS HAS BEEN OBTAINED FROM A PREVIOUS SET OF DRAWINGS, OR FROM FIELD INVESTIGATION AND SUCH "EXISTING" INFORMATION SHALL BE FIELD VERIFIED BY ALL CONTRACTORS.
45. THE CONTRACTOR SHALL COORDINATE WITH THE OWNER FOR DESIGNATED CONSTRUCTION STAGING LOCATIONS, STORAGE AREAS, AND CONSTRUCTION SEQUENCING.
46. THE PREMISES WILL BE OCCUPIED AT ALL TIMES DURING THE CONSTRUCTION SCHEDULE. THE CONTRACTOR SHALL COORDINATE WITH THE OWNER REGARDING ALL INTERRUPTIONS OF UTILITIES, TEMPORARY EXITS, DUST PARTITIONS, DELIVERIES, AND ALL OTHER JOB REQUIREMENTS.
47. THE CONTRACTOR SHALL PROVIDE COMPLETE POWER, COMMUNICATIONS AND DATA CONNECTIONS AT ALL GOVERNMENT PROVIDED WORKSTATIONS.

SYM	DESCRIPTION	DATE	APPR

NAVFAC

COMMONWEALTH OF VIRGINIA
JOHN B. ANDERSON III
Lic. No. 015146
3/18/2016
ARCHITECT

Wiley|Wilson | BURNS McDONNELL
JOINT VENTURE

A/E INFO

APPROVED

FOR COMMANDER NAVFAC / B.L.T.L.

ACTIVITY

SATISFACTORY TO DATE

DES	JBA	DRW	JBA	CHK	LTC

PROJECT MANAGER

IPT TECH. BRANCH HEAD

CHIEF ENG/ARCH

DEPARTMENT OF THE NAVY
NAVAL FACILITIES ENGINEERING COMMAND
WEBSTER FIELD, NAS PATUXENT RIVER
NAVAL FACILITIES ENGINEERING COMMAND ~ WASHINGTON
ST. INIGOES, MD
NAVAL AIR STATION PATUXENT RIVER
ST. INIGOES, MD

BUILDING 8008 REPAIRS, ALTERATIONS AND ADDITION

LEGEND & ABBREVIATIONS

SCALE: AS NOTED
EPROJECT NO. 1183080
CONSTR. CONTR. NO. N40080-15-D-0452
NAVFAC DRAWING NO. 13078334
SHEET 50 OF 180
AG001

DRAWFORM REVISION: 10 MAY 2014

FILE NAME: C:\Revit_Projects\86314_A_Central_jbanderson@burnsmcd.com.rvt
REV/DATE: 3/18/2016 9:21:01 AM

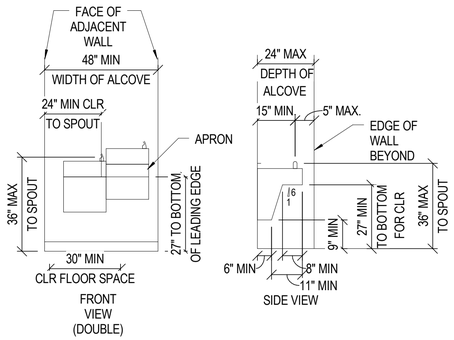

ELECTRIC WATER COOLER

SCALE: 3/8" = 1'-0"

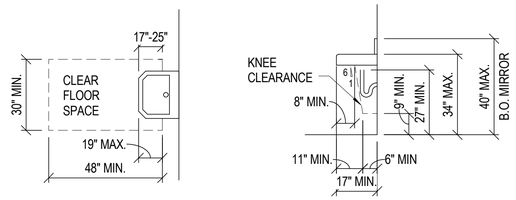

LAVATORIES

SCALE: 3/8" = 1'-0"

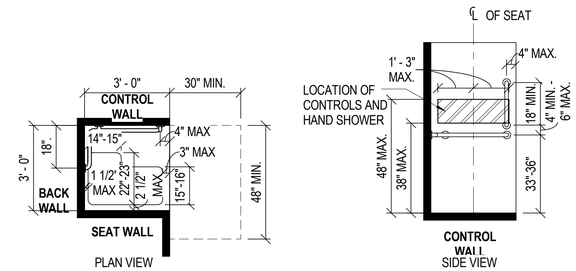

SHOWER STALLS

SCALE: 3/8" = 1'-0"

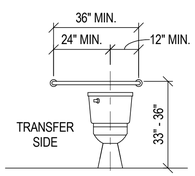

NOTE: FLUSH VALVE SHALL BE LOCATED ON WIDE SIDE OF STALLS

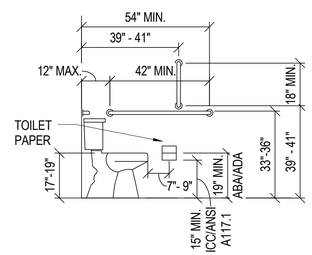

GRAB BARS

SCALE: 3/8" = 1'-0"

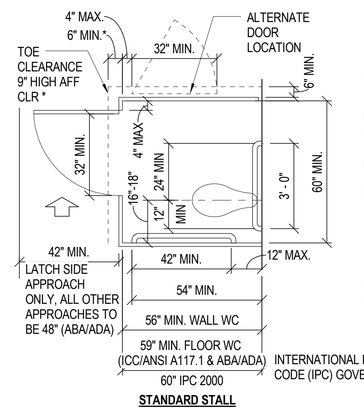

1. WHERE "*" IS INDICATED - TOE CLEARANCE AT THE FRONT OF THE PARTITION IS NOT REQUIRED IN A COMPARTMENT GREATER THAN 62" DEEP WITH A WALL-HUNG WATER CLOSET OR 65" DEEP WITH A FLOOR-MOUNTED WATER CLOSET. TOE CLEARANCE AT THE SIDE IS NOT REQUIRED IN A COMPARTMENT GREATER THAN 66" WIDE (ICC/ANSI A117.1/ABA/ADA). TOE CLEARANCE IS EXCLUSIVE OF PARTITION SUPPORT MEMBERS.

42" ICC/ANSI A117.1 GOVERNS - CLEAR FROM OUTSIDE FACE OF ADJACENT STALL

STANDARD STALLS

SCALE: 3/8" = 1'-0"

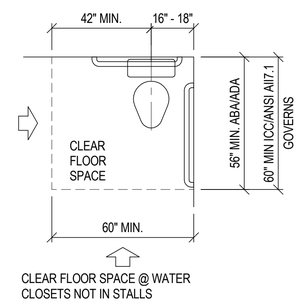

WATER CLOSETS

SCALE: 3/8" = 1'-0"

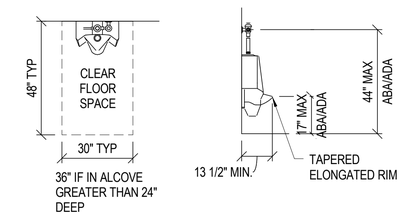

URINALS

SCALE: 3/8" = 1'-0"

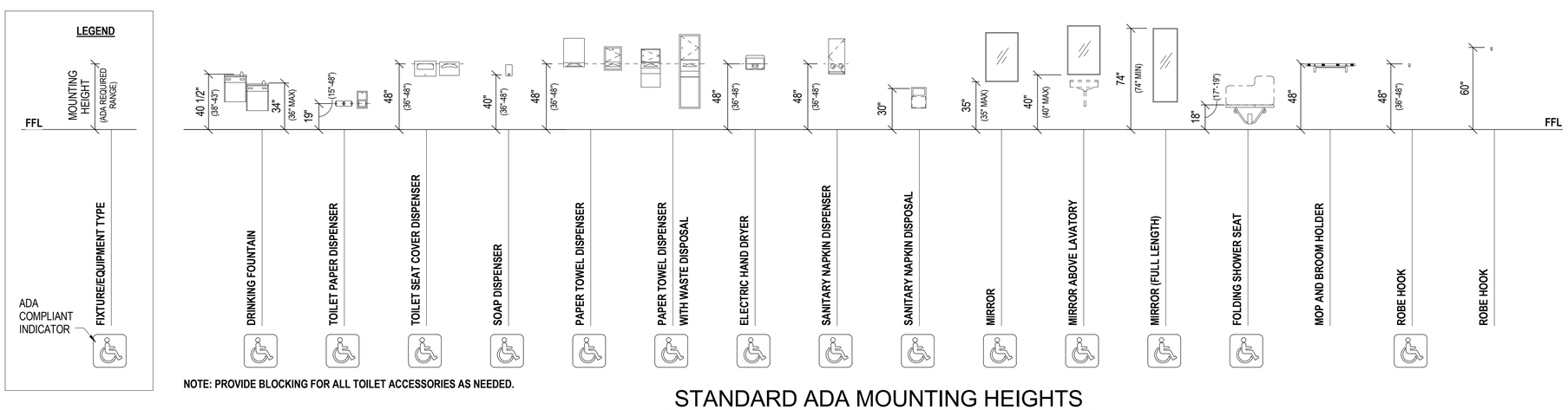

NOTE: PROVIDE BLOCKING FOR ALL TOILET ACCESSORIES AS NEEDED.

STANDARD ADA MOUNTING HEIGHTS

SCALE: NOT TO SCALE

SYM	DESCRIPTION	DATE	APPR

NAVFAC

COMMONWEALTH OF VIRGINIA
JOHN B. ANDERSON III
Lic. No. 015146
3/18/2016
ARCHITECT

Wiley|Wilson | BURNS McDONNELL
JOINT VENTURE

A/E INFO

APPROVED

FOR COMMANDER NAVFAC / B.L.T.L

ACTIVITY

SATISFACTORY TO DATE

DES JBA | DRW JBA | CHK LTC

PROJECT MANAGER

IPT TECH. BRANCH HEAD

CHIEF ENG/ARCH

DEPARTMENT OF THE NAVY
NAVAL FACILITIES ENGINEERING COMMAND
WEBSTER FIELD, NAS PATUXENT RIVER

NAVAL FACILITIES ENGINEERING COMMAND ~ WASHINGTON
ST. INIGOES, MD

NAVAL AIR STATION PATUXENT RIVER
ST. INIGOES, MD

BUILDING 8008 REPAIRS, ALTERATIONS AND ADDITION

ADA INFORMATION

SCALE: AS NOTED
EPROJECT NO. 1183080
CONSTR. CONTR. NO. N40080-15-D-0452
NAVFAC DRAWING NO. 13078335
SHEET 51 OF 180
AG002

DRAWFORM REVISION: 10 MAY 2014

FILE NAME: C:\Revit_Projects\86314_A_Central_jbanderson@burnsmcd.com.rvt

REV/DATE: 3/18/2016 9:21:08 AM

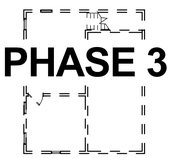

PLAN NORTH

PARTIAL DEMOLITION FLOOR PLAN - SECOND FLOOR

SCALE: 1/16" = 1'-0"

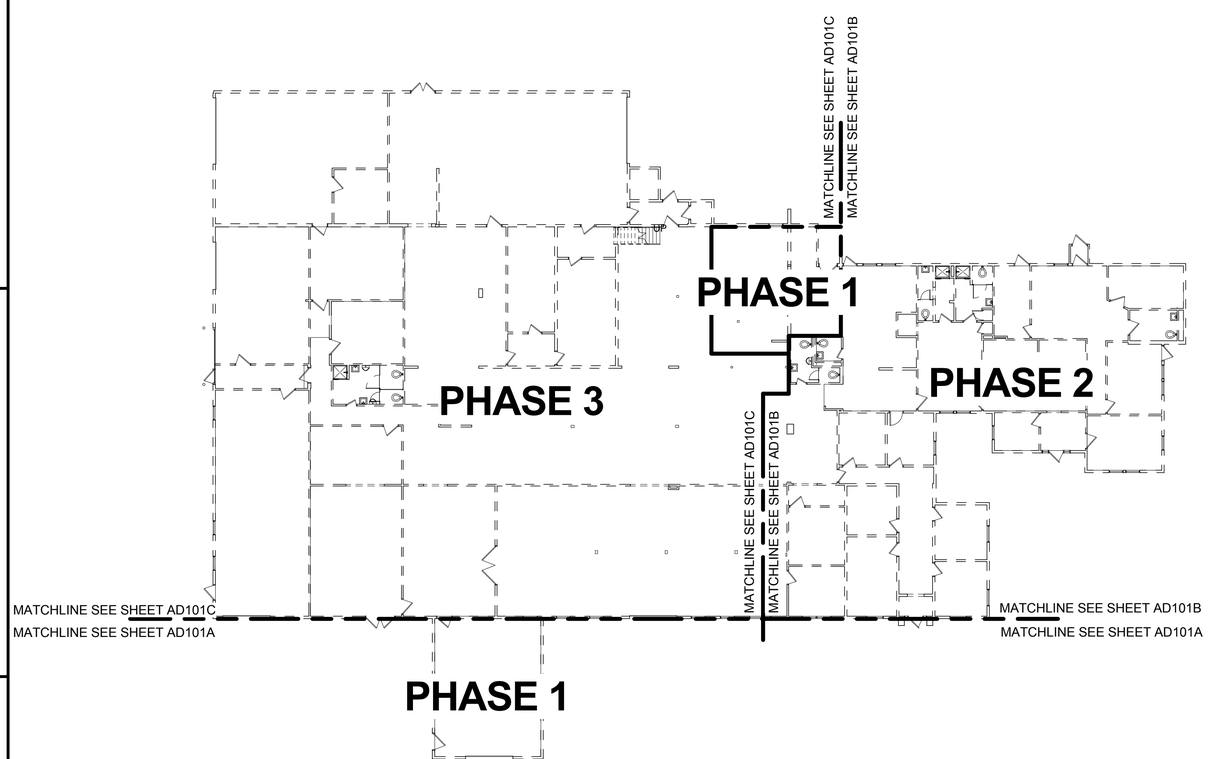

PLAN NORTH

OVERALL DEMOLITION FLOOR PLAN

SCALE: 1/16" = 1'-0"

GENERAL FLOOR PLAN DEMOLITION NOTES:

1. EXISTING CONDITIONS SHOWN ON DRAWINGS ARE FOR INFORMATIONAL PURPOSES ONLY AND DO NOT SHOW ALL CONDITIONS THAT MAY AFFECT THE WORK OF THIS CONTRACT. CONTRACTOR SHALL FIELD VERIFY ALL EXISTING CONDITIONS. REFER TO ALL ARCHITECTURAL, PLUMBING, MECHANICAL, ELECTRICAL, AND STRUCTURAL DRAWINGS FOR ADDITIONAL DEMOLITION INFORMATION AND COORDINATION.
2. FIELD VERIFY EXISTING CONDITIONS BEFORE COMMENCING ANY WORK. ARCHITECT SHALL BE NOTIFIED IMMEDIATELY OF ANY DISCREPANCIES DETRIMENTAL TO THE PROPER EXECUTION OF NEW CONSTRUCTION.
3. ALL DEMOLITION WORK SHALL COMPLY WITH APPLICABLE BUILDING CODE AND ALL APPLICABLE LOCAL, STATE, AND FEDERAL LAWS, ORDINANCES, AND REGULATIONS. SEE CODE SUMMARY SHEET FOR APPLICABLE BUILDING CODE.
4. REMOVE EXISTING CONSTRUCTION TO THE EXTENT INDICATED ON THE DRAWINGS. PROTECT ALL OTHER EXISTING STRUCTURES ON ADJACENT PROPERTIES FROM DAMAGE THROUGHOUT CONSTRUCTION. SHOULD ANY DAMAGE OCCUR TO ANY EXISTING CONSTRUCTION ON ADJACENT PROPERTIES OR EXISTING CONSTRUCTION TO REMAIN ON SITE, THE CONTRACTOR SHALL REPAIR THE DAMAGE TO THE SATISFACTION OF THE PROPERTY OWNER.
5. CONTRACTOR SHALL PROTECT ALL EXISTING CONSTRUCTION NOTED TO REMAIN FROM DAMAGE AND SOILING DURING DEMOLITION. REMOVE DEBRIS REGULARLY AS NECESSARY TO ELIMINATE INTERFERENCE.
6. EXCEPT FOR ITEMS OR MATERIALS INDICATED TO BE REUSED, SALVAGED, REINSTALLED, OR OTHERWISE INDICATED TO REMAIN THE OWNER'S PROPERTY, DEMOLISHED MATERIALS SHALL BECOME THE CONTRACTOR'S PROPERTY AND SHALL BE REMOVED FROM THE SITE WITH FURTHER DISPOSITION AT THE CONTRACTOR'S OPTION.
7. EXISTING WALLS SHOWN GRAPHICALLY WITH SOLID LINES TO REMAIN. PROTECT ALL EXISTING CONSTRUCTION TO REMAIN AND PREPARE SURFACES TO RECEIVE NEW CONSTRUCTION OR FINISHES.
8. ALL DEMOLISHED MATERIALS SHALL BE LEGALLY DISPOSED OF PROMPTLY. DO NOT ALLOW DEMOLISHED MATERIALS TO ACCUMULATE ON SITE. NO BURNING IS ALLOWED.
9. PROTECT ALL ADJACENT AREAS FROM DUST, DEBRIS, AND DEMOLITION ACTIVITIES DURING THE DEMOLITION. REPAIR OR REPLACE, AT NO COST TO THE OWNER, ALL AREAS OR ITEMS DAMAGED DURING THE DEMOLITION.
10. CARE SHOULD BE MADE TO KEEP DUST AND NOISE FROM DEMOLITION ACTIVITIES FROM THE OTHER PORTIONS OF THE BUILDING. ERECT AND MAINTAIN DUSTPROOF PARTITIONS. COVER AND PROTECT FURNITURE, FURNISHINGS AND EQUIPMENT THAT HAVE NOT BEEN REMOVED.
11. LIMITS OF CONTRACT TO EXTEND UP TO, AND INCLUDE, THE PROPERTY LINES, AND SHALL NOT EXTEND BEYOND THESE LIMITS ONTO PUBLIC OR PRIVATE PROPERTY, EXCEPT AS INDICATED ON THE DRAWINGS.
12. WHEN UNANTICIPATED MECHANICAL, ELECTRICAL, OR STRUCTURAL ELEMENTS THAT CONFLICT WITH THE INTENDED FUNCTION OR DESIGN ARE ENCOUNTERED, DETERMINE THE NATURE AND EXTENT OF THE CONFLICT AND NOTIFY THE ARCHITECT IMMEDIATELY FOR RESOLUTION.
13. CONTRACTOR SHALL COMPLY WITH ALL NECESSARY FIRE SAFETY REQUIREMENTS IN ACCORDANCE WITH 1988 UFC AND NFPA 13 AND CURRENTLY ADOPTED CITY AND STATE CODES.
14. THIS DEMOLITION PLAN OUTLINES THE SCOPE OF THE WORK INVOLVED FOR THE DEMOLITION PHASE OF THIS PROJECT. CONTRACTOR SHALL ALSO REFER TO THE DRAWINGS FOR THE CONSTRUCTION OF THE NEW ADDITION FOR ADDITIONAL INFORMATION.
15. ALL WORK MUST BE COORDINATED WITH THE BRANCH MANAGER WITH REGARD TO SCHEDULE AND DISRUPTION OF BUSINESS OPERATIONS.
16. ALL FURNITURE WILL BE REMOVED OR RELOCATED BY THE OWNER AS NECESSARY IN ACCORDANCE WITH THE PHASING PLANS.
17. ALL DEMOLITION WORK SHALL BE PHASED AND COORDINATED WITH THE OTHER WORK OF THIS PROJECT AS OUTLINED IN THE PHASING DRAWINGS AND NOTES. ANY DISCREPANCIES NOTED WHICH WILL IMPACT THE SCHEDULE FOR CONSTRUCTION OR HAVE AN EFFECT ON THE CONTINUED OPERATION OF BUSINESS AT THIS FACILITY SHALL BE BROUGHT TO THE IMMEDIATE ATTENTION OF THE ARCHITECT FOR RESOLUTION.
18. DO NOT INTERRUPT EXISTING UTILITIES, EXCEPT WHEN AUTHORIZED IN WRITING BY AUTHORITIES HAVING JURISDICTION. PROVIDE TEMPORARY SERVICES DURING INTERRUPTIONS TO EXISTING UTILITIES, AS ACCEPTABLE TO GOVERNING AUTHORITIES.
19. WHEN UTILITY SERVICES ARE REQUIRED TO BE REMOVED, RELOCATED, OR ABANDONED, PROVIDE BYPASS CONNECTIONS TO MAINTAIN CONTINUITY OF SERVICE BEFORE PROCEEDING WITH DEMOLITION.
20. PRIOR TO COMMENCEMENT WITH ANY DEMOLITION WORK, CONTRACTOR SHALL IDENTIFY ALL ELECTRICAL CIRCUITS SERVICING THE AREA INVOLVED WITH THIS DEMOLITION. THOSE CIRCUITS SHALL THEN BE LOCKED OUT AND TAGGED OUT IF THEY DO NOT SERVICE ANY OF THE REMAINING BUILDING. THOSE CIRCUITS WHICH ARE IDENTIFIED TO SERVICE BOTH THE AREA TO BE DEMOLISHED AND THE REMAINING BUILDING SHALL BE SPLIT SO AS TO KILL ALL ELECTRICAL POWER TO THE AREA TO BE DEMOLISHED WHILE MAINTAINING POWER TO THE REMAINDER OF THE BUILDING.
21. PROVIDE TEMPORARY BARRICADES AND OTHER PROTECTION REQUIRED TO PREVENT INJURY TO PEOPLE AND DAMAGE TO ADJACENT BUILDING AREAS TO REMAIN.
22. NEATLY CUT OPENINGS AND HOLES PLUMB, SQUARE AND TRUE TO DIMENSIONS REQUIRED. USE CUTTING METHODS LEAST LIKELY TO DAMAGE ADJOINING CONSTRUCTION TO REMAIN.
23. REMOVE ALL EXISTING CARPET AND EXISTING RUBBER BASE FROM ALL AREAS TO BE REMODELED. FLOOR MUST BE FREE OF DUST, DIRT, OIL, GREASE, PAINT, WAX OR ANY DEBRIS THAT COULD AFFECT ADHESION OF THE CARPET MODULES TO THE FLOOR DURING BUILD-BACK PHASE.
24. DRYWALL PARTITIONS: REMOVE GYPSUM BOARD, STEEL FRAMING, RUNNERS, TRACKS, ANCHORS AND FASTENERS, UNLESS OTHERWISE NOTED OR SHOWN. PATCH ANCHOR HOLES WHERE CEILING, WALLS, AND FLOORS ARE TO REMAIN.
25. PRIOR TO DEMOLITION, MAKE SURE PLUMBING IS CUT AND CAPPED AT ALL SINK LOCATIONS, REMOVE CABINETRY, CASEWORK, SINKS, AND COUNTERTOPS. REFERENCE MECHANICAL DRAWINGS FOR PLUMBING AND PIPES.

KEY PLAN:

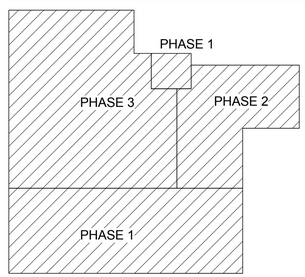

GRAPHIC SCALE:

1/16" =1'-0" 0' 8' 16' 32'

SYM	DESCRIPTION	DATE	APPR

NAVFAC

COMMONWEALTH OF VIRGINIA
JOHN B. ANDERSON III
Lic. No. 015146
3/18/2016
ARCHITECT

Wiley|Wilson | BURNS McDONNELL
JOINT VENTURE

A/E INFO.

APPROVED
FOR COMMANDER NAVFAC / B.L.T.L.
ACTIVITY
SATISFACTORY TO DATE
DES JBA | DRW JBA | CHK LTC
PROJECT MANAGER
IPT TECH. BRANCH HEAD
CHIEF ENG/ARCH

DEPARTMENT OF THE NAVY
NAVAL FACILITIES ENGINEERING COMMAND
WEBSTER FIELD, NAS PATUXENT RIVER
NAVAL FACILITIES ENGINEERING COMMAND ~ WASHINGTON
ST. INIGOES, MD
NAVAL AIR STATION PATUXENT RIVER
ST. INIGOES, MD
BUILDING 8008 REPAIRS, ALTERATIONS AND ADDITION
OVERALL DEMOLITION FLOOR PLAN

SCALE: AS NOTED
EPROJECT NO. 1183080
CONSTR. CONTR. NO. N40080-15-D-0452
NAVFAC DRAWING NO. 13078336
SHEET 52 OF 180
AD101

DRAWFORM REVISION: 10 MAY 2014

FILE NAME: C:\Revit_Projects\86314_A_Central_jbanderson@burnsmcd.com.rvt
REVDATE: 3/18/2016 9:20:39 AM

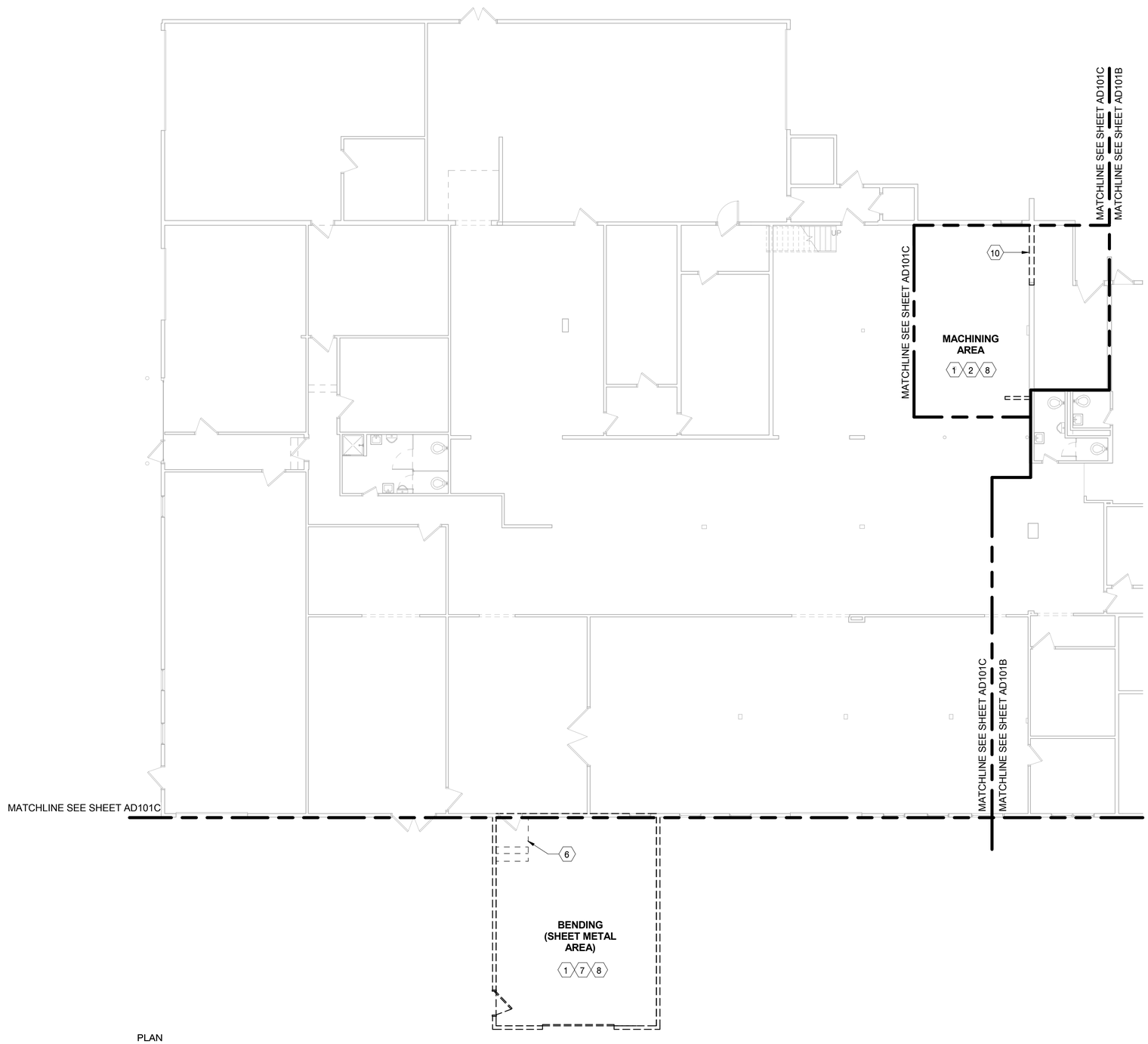

PLAN NORTH

DEMOLITION PLAN - PHASE 1

SCALE: 1/8" = 1'-0"

DEMOLITION KEY NOTES

1. REMOVE EXISTING EXTERIOR WALL STRUCTURE AND FINISHES, INTERIOR PARTITIONS, CEILING AND FLOOR FINISHES, WINDOWS AND DOORS (INTERIOR AND EXTERIOR) AND ROOF STRUCTURE AND ROOFING SYSTEM COMPLETE
2. REMOVE PORTION OF EXISTING SLAB, SEE STRUCTURAL
3. REMOVE EXISTING PLUMBING FIXTURES AND CASEWORK
4. REMOVE EXISTING KITCHEN EQUIPMENT
5. REMOVE EXISTING RAMP
6. REMOVE EXISTING STAIR AND RAILING
7. RELOCATE EXISTING EQUIPMENT PER PHASING NOTES
8. RELOCATE EXISTING FURNITURE PER PHASING NOTES
9. REMOVE EXISTING WOOD FLOOR STRUCTURE
10. REMOVE PORTION OF EXISTING CMU WALL - SEE STRUCTURAL.
11. NOT USED THIS SHEET
12. NOT USED THIS SHEET
13. NOT USED THIS SHEET

KEY PLAN:

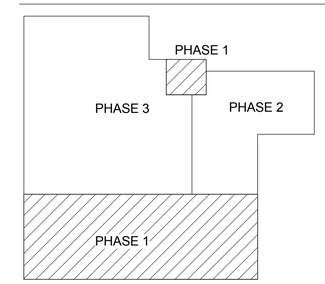

GRAPHIC SCALE:

1/8" =1'-0" 0' 4' 8' 16'

SYM	DESCRIPTION	DATE	APPR

NAVFAC

COMMONWEALTH OF VIRGINIA
JOHN B. ANDERSON III
Lic. No. 015146
3/18/2016
ARCHITECT

Wiley|Wilson | BURNS McDONNELL
JOINT VENTURE

A/E INFO

APPROVED
FOR COMMANDER NAVFAC / B.L.T.L.
ACTIVITY
SATISFACTORY TO DATE
DES JBA | DRW JBA | CHK LTC
PROJECT MANAGER
IPT TECH. BRANCH HEAD
CHIEF ENG/ARCH

DEPARTMENT OF THE NAVY
NAVAL FACILITIES ENGINEERING COMMAND
WEBSTER FIELD, NAS PATUXENT RIVER
NAVAL FACILITIES ENGINEERING COMMAND ~ WASHINGTON
ST. INIGOES, MD
NAVAL AIR STATION PATUXENT RIVER
ST. INIGOES, MD
BUILDING 8008 REPAIRS, ALTERATIONS AND ADDITION
DEMOLITION FLOOR PLAN - PHASE 1

SCALE: AS NOTED
EPROJECT NO. 1183080
CONSTR. CONTR. NO. N40080-15-D-0452
NAVFAC DRAWING NO. 13078337
SHEET 53 OF 180
AD101A

DRAWFORM REVISION: 10 MAY 2014

FILE NAME: C:\Revit_Projects\86314_A_Central_jbanderson@burnsmcd.com.rvt
REVDATE: 3/18/2016 9:20:45 AM

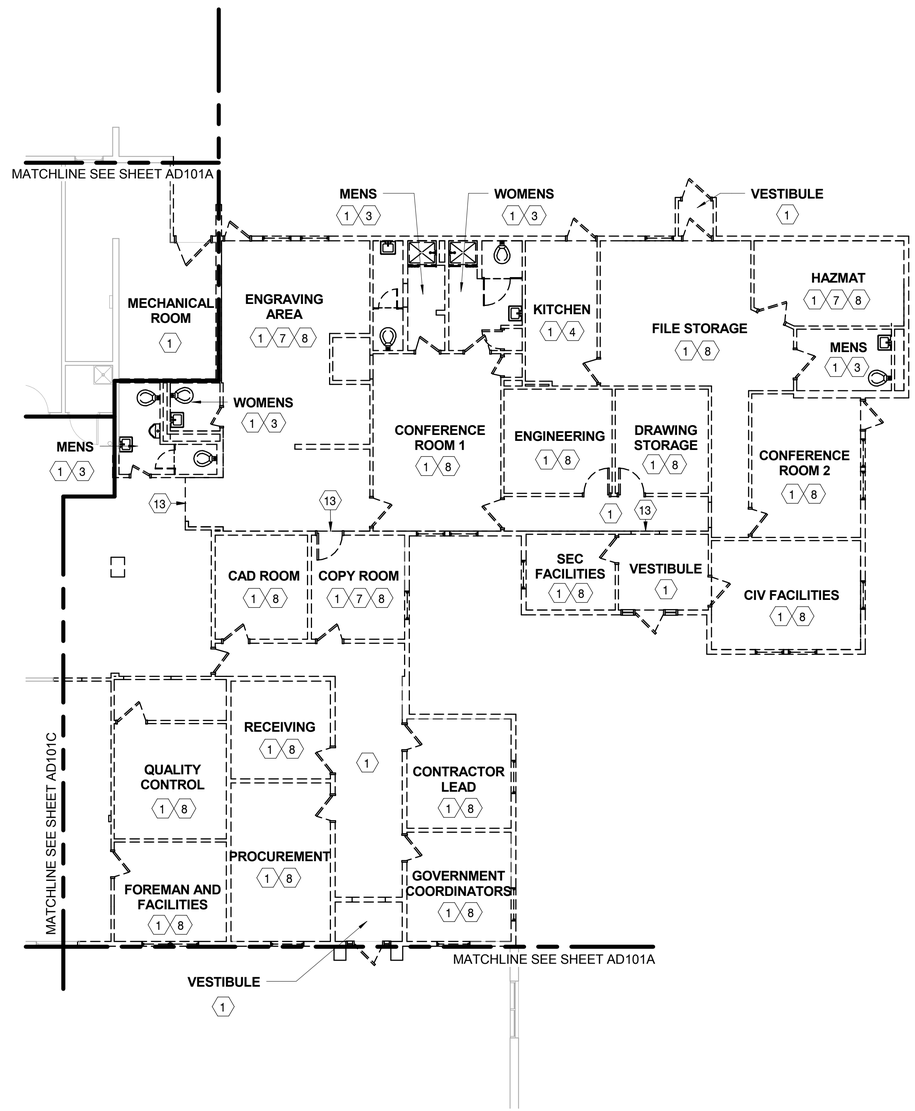

PLAN NORTH

DEMOLITION PLAN - PHASE 2

SCALE: 1/8" = 1'-0"

DEMOLITION KEY NOTES

1. REMOVE EXISTING EXTERIOR WALL STRUCTURE AND FINISHES, INTERIOR PARTITIONS, CEILING AND FLOOR FINISHES, WINDOWS AND DOORS (INTERIOR AND EXTERIOR) AND ROOF STRUCTURE AND ROOFING SYSTEM COMPLETE. EXISTING SLAB TO REMAIN, UNO.
2. REMOVE PORTION OF EXISTING SLAB, SEE STRUCTURAL
3. REMOVE EXISTING PLUMBING FIXTURES AND CASEWORK
4. REMOVE EXISTING KITCHEN EQUIPMENT
5. REMOVE EXISTING RAMP
6. NOT USED THIS SHEET
7. RELOCATE EXISTING EQUIPMENT PER PHASING NOTES
8. RELOCATE EXISTING FURNITURE PER PHASING NOTES
9. REMOVE EXISTING WOOD FLOOR STRUCTURE
10. NOT USED THIS SHEET
11. NOT USED THIS SHEET
12. NOT USED THIS SHEET
13. EDGE OF EXISTING FLOOR ELEVATION CHANGE

KEY PLAN:

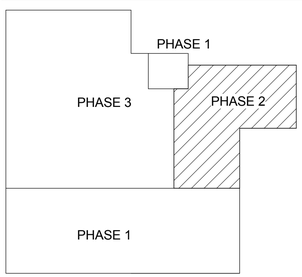

GRAPHIC SCALE:

1/8" =1'-0" 0' 4' 8' 16'

SYM	DESCRIPTION	DATE	APPR

NAVFAC

COMMONWEALTH OF VIRGINIA
JOHN B. ANDERSON III
Lic. No. 015146
3/18/2016
ARCHITECT

Wiley|Wilson | BURNS McDONNELL
JOINT VENTURE

A/E INFO

APPROVED
FOR COMMANDER NAVFAC / B.L.T.L.

ACTIVITY

SATISFACTORY TO DATE
DES JBA | DRW JBA | CHK LTC
PROJECT MANAGER
IPT TECH. BRANCH HEAD
CHIEF ENG/ARCH

DEPARTMENT OF THE NAVY
NAVAL FACILITIES ENGINEERING COMMAND
WEBSTER FIELD, NAS PATUXENT RIVER
NAVAL FACILITIES ENGINEERING COMMAND ~ WASHINGTON
ST. INIGOES, MD
NAVAL AIR STATION PATUXENT RIVER
ST. INIGOES, MD
BUILDING 8008 REPAIRS, ALTERATIONS AND ADDITION
DEMOLITION FLOOR PLAN - PHASE 2

SCALE: AS NOTED
EPROJECT NO. 1183080
CONSTR. CONTR. NO. N40080-15-D-0452
NAVFAC DRAWING NO. 13078338
SHEET 54 OF 180
AD101B

DRAWFORM REVISION: 10 MAY 2014

FILE NAME: C:\Revit_Projects\86314_A_Central_jbanderson@burnsmcd.com.rvt
REVDATE: 3/18/2016 9:20:51 AM

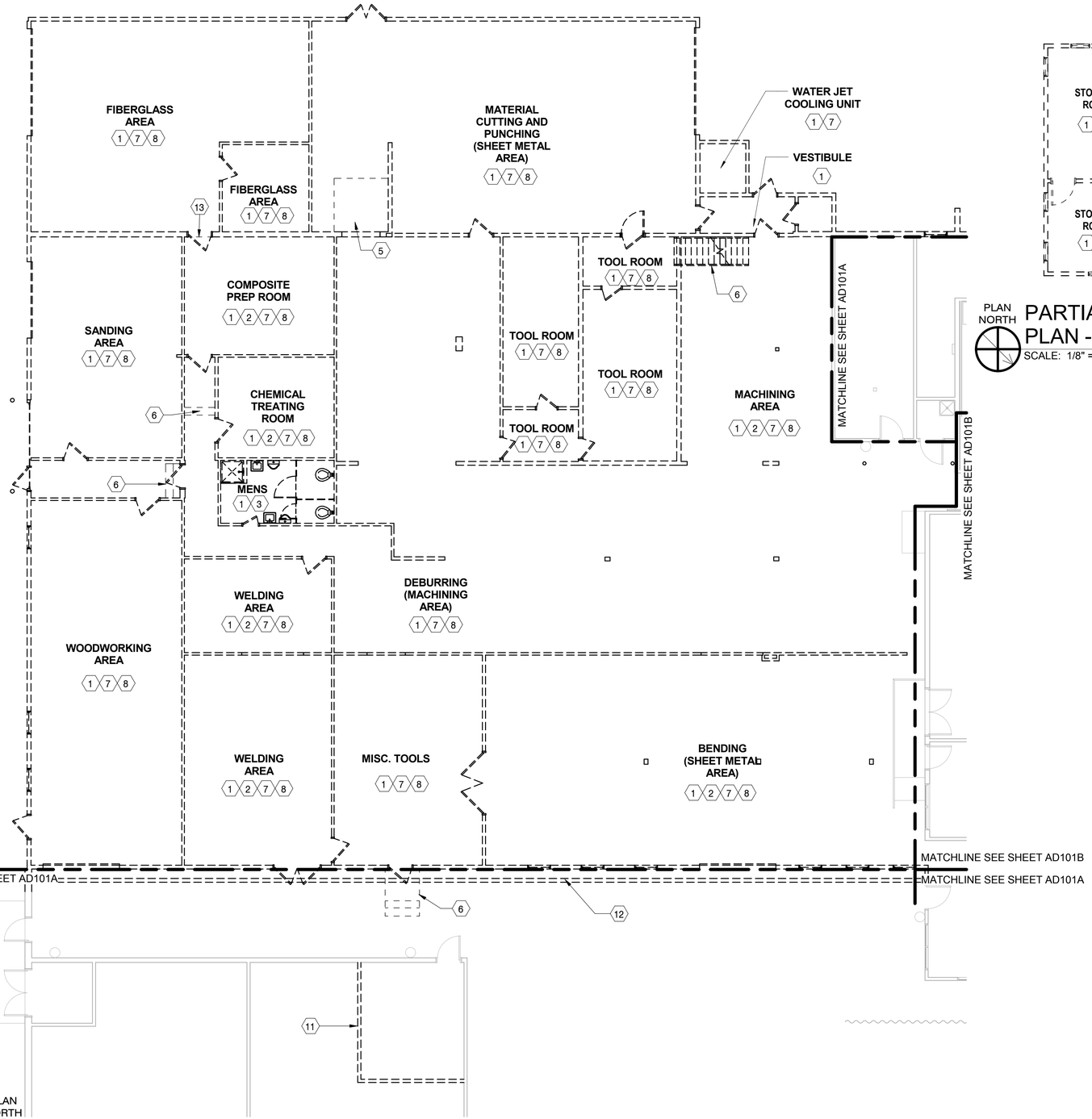

DEMOLITION PLAN - PHASE 3

SCALE: 1/8" = 1'-0"

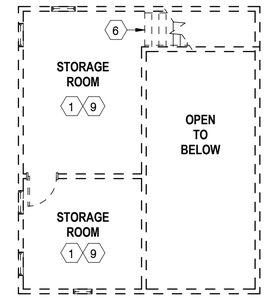

PLAN NORTH

PARTIAL DEMOLITION PLAN - SECOND FLOOR - PHASE 3

SCALE: 1/8" = 1'-0"

DEMOLITION KEY NOTES

1. REMOVE EXISTING EXTERIOR WALL STRUCTURE AND FINISHES, INTERIOR PARTITIONS, CEILING AND FLOOR FINISHES, WINDOWS AND DOORS (INTERIOR AND EXTERIOR) AND ROOF STRUCTURE AND ROOFING SYSTEM COMPLETE
2. REMOVE PORTION OF EXISTING SLAB, SEE STRUCTURAL
3. REMOVE EXISTING PLUMBING FIXTURES AND CASEWORK
4. REMOVE EXISTING KITCHEN EQUIPMENT
5. REMOVE EXISTING RAMP
6. REMOVE EXISTING STAIR AND RAILING
7. RELOCATE EXISTING EQUIPMENT PER PHASING NOTES
8. RELOCATE EXISTING FURNITURE PER PHASING NOTES
9. REMOVE EXISTING WOOD FLOOR STRUCTURE
10. NOT USED THIS SHEET
11. REMOVE EXISTING TEMPORARY WALL PREVIOUSLY CONSTRUCTED DURING PHASE 1 AT THE COMPLETION OF PHASE 3 CONSTRUCTION
12. REMOVE EXISTING TEMPORARY CONSTRUCTION WALL AT THE COMPLETION OF PHASE 3 CONSTRUCTION
13. EDGE OF EXISTING FLOOR ELEVATION CHANGE

KEY PLAN:

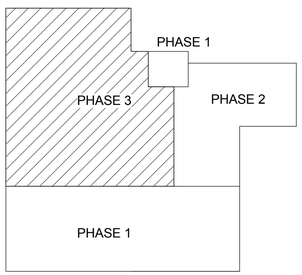

GRAPHIC SCALE:

1/8" =1'-0" 0' 4' 8' 16'

SYM	DESCRIPTION	DATE	APPR

NAVFAC

COMMONWEALTH OF VIRGINIA
JOHN B. ANDERSON III
Lic. No. 015146
3/18/2016
ARCHITECT

Wiley|Wilson | BURNS McDONNELL
JOINT VENTURE

A/E INFO

APPROVED
FOR COMMANDER NAVFAC / B.L.T.L.

ACTIVITY

SATISFACTORY TO DATE

DES	JBA	DRW	JBA	CHK	LTC

PROJECT MANAGER
IPT TECH. BRANCH HEAD
CHIEF ENG/ARCH

DEPARTMENT OF THE NAVY
NAVAL FACILITIES ENGINEERING COMMAND
WEBSTER FIELD, NAS PATUXENT RIVER
NAVAL FACILITIES ENGINEERING COMMAND ~ WASHINGTON
ST. INIGOES, MD
NAVAL AIR STATION PATUXENT RIVER
ST. INIGOES, MD
BUILDING 8008 REPAIRS, ALTERATIONS AND ADDITION
DEMOLITION FLOOR PLAN - PHASE 3

SCALE: AS NOTED
EPROJECT NO. 1183080
CONSTR. CONTR. NO. N40080-15-D-0452
NAVFAC DRAWING NO. 13078339
SHEET 55 OF 180
AD101C

DRAWFORM REVISION: 10 MAY 2014

FILE NAME: C:\Revit_Projects\86314_A_Central_jbanderson@burnsmcd.com.rvt
REVDATE: 3/18/2016 9:20:58 AM

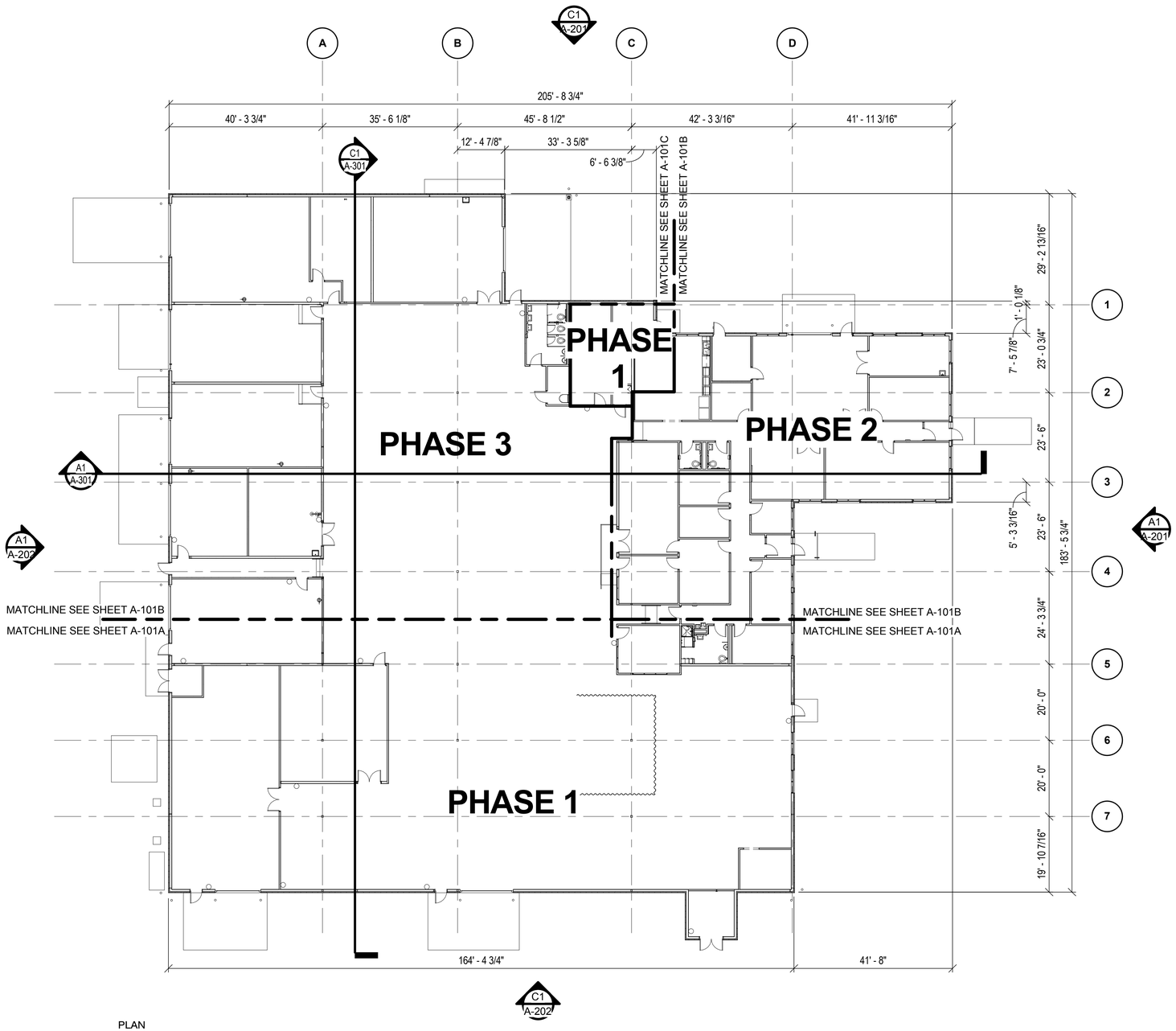

PLAN NORTH

OVERALL FLOOR PLAN

SCALE: 1/16" = 1'-0"

GENERAL FLOOR PLAN NOTES:

1. FOR ARCHITECTURAL GENERAL NOTES, MATERIAL LEGEND, AND ABBREVIATIONS REFER TO SHEET AG001.
2. REFERENCE LIFE SAFETY DRAWINGS FOR FIRE RATED WALL LOCATIONS. ALL FIRE RATED WALLS AND SMOKE PARTITIONS ARE CONTINUOUS ACROSS ALL DOOR OPENINGS.
3. THE CONTRACTOR SHALL VERIFY ALL DIMENSIONS, ELEVATIONS AND SITE CONDITIONS BEFORE BEGINNING WORK AND FABRICATION, AND SHALL VERIFY EXISTING CONDITIONS WITH THE ARCHITECTURAL AND STRUCTURAL DRAWINGS. THE CONTRACT OFFICER SHALL BE NOTIFIED IN WRITING IMMEDIATELY OF ANY DISCREPANCIES OR INCONSISTENCIES. IN NO CASE SHALL DIMENSIONS BE SCALED OFF PLANS, SECTIONS, OR DETAILS FROM THESE DRAWINGS.
4. DOOR LOCATIONS NOT DIMENSIONED ARE 6 INCHES FROM FACE OF GYPSUM BOARD FINISH WALL TO DOOR JAMB FACE. VERIFY THERE IS A PULL SIDE MINIMUM 18 INCHES CLEAR FROM DOOR STRIKE TO INTERSECTING WALL FOR ADA COMPLIANCE. NOTIFY CONTRACT OFFICER FOR NON-COMPLIANCE BEFORE SETTING DOOR FRAME AND WALL LOCATIONS.
5. CONTRACTOR SHALL COORDINATE AND PROVIDE ALL MILLWORK TRIM AND INFILL PANELS AT ALL UNDERCOUNTER / CABINET LOCATIONS.
6. REFER TO FINISH SCHEDULE FOR ADDITIONAL FINISH INFORMATION. ALL FLOOR FINISHES TO BE CONTINUOUS UNDER MILLWORK AND EQUIPMENT UNLESS NOTED OTHERWISE.
7. PROVIDE 18GA METAL PLATE OR FIRE TREATED WOOD BLOCKING IN WALL FOR TOILET FIXTURES, ACCESSORIES, EQUIPMENT, TOILET PARTITIONS, AND COUNTERTOP MOUNTING SUPPORTS. REFERENCE FURNITURE PLANS FOR LOCATIONS OF WALL ACCESSORIES AND VISUAL DISPLAY EQUIPMENT. PROVIDE BLOCKING AS REQUIRED
8. REFERENCE THE ROOM FINISH SCHEDULE AND MATERIAL LEGEND FOR ROOM FINISH INFORMATION.
9. ALL DIMENSIONS FROM: COLUMN GRID LINE TO COLUMN GRID LINE. COLUMN GRID LINE TO FACE OF CMU WALL. FACE OF CMU WALL TO FACE OF CMU WALL. FINISH FACE OF METAL STUD WALL TO FINISH FACE OF METAL STUD WALL. COLUMN GRID LINE BACK OF INSULATED METAL WALL PANEL. FINISH FACE OF METAL STUD WALL TO BACK OF INSULATED METAL WALL PANEL. UNLESS NOTED OTHERWISE.
10. THE FIRST FLOOR FINISHED FLOOR ELEVATION IS 100'-0" UNLESS NOTED OTHERWISE.
11. PROVIDE GYPSUM BOARD HEADER ABOVE ALL CASED OPENING, REFERENCE REFLECTED CEILING PLANS.

KEY PLAN:

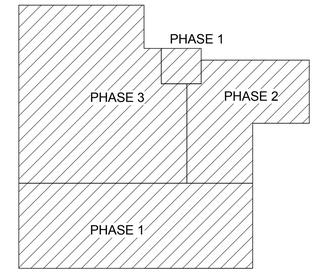

GRAPHIC SCALE:

1/16" =1'-0" 0' 8' 16' 32'

SYM	DESCRIPTION	DATE	APPR

NAVFAC

COMMONWEALTH OF VIRGINIA
JOHN B. ANDERSON III
Lic. No. 015146
3/18/2016
ARCHITECT

Wiley|Wilson | BURNS McDONNELL
JOINT VENTURE

A/E INFO.

APPROVED

FOR COMMANDER NAVFAC / B.L.T.L.

ACTIVITY

SATISFACTORY TO DATE

DES	JBA	DRW	JBA	CHK	LTC

PROJECT MANAGER
IPT TECH. BRANCH HEAD
CHIEF ENG/ARCH

DEPARTMENT OF THE NAVY
NAVAL FACILITIES ENGINEERING COMMAND
WEBSTER FIELD, NAS PATUXENT RIVER
NAVAL FACILITIES ENGINEERING COMMAND ~ WASHINGTON
ST. INIGOES, MD
NAVAL AIR STATION PATUXENT RIVER
ST. INIGOES, MD
BUILDING 8008 REPAIRS, ALTERATIONS AND ADDITION
OVERALL FLOOR PLAN

SCALE: AS NOTED
EPROJECT NO. 1183080
CONSTR. CONTR. NO. N40080-15-D-0452
NAVFAC DRAWING NO. 13078340
SHEET 56 OF 180
A-101

DRAWFORM REVISION: 10 MAY 2014

FILE NAME: C:\Revit_Projects\86314_A_Central_jbanderson@burnsmcd.com.rvt
REVDATE: 3/18/2016 9:15:24 AM

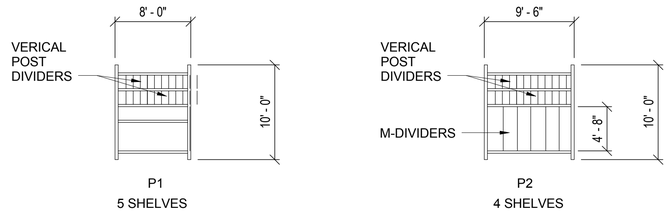

NOTE: CONFIRM RACKING REQUIREMENTS WITH ACTIVITY.
COORDINATE REQUIRED ACCESSORIES AND DIVIDERS

D1 RACKING LEGEND
SCALE: 1/8" = 1'-0"

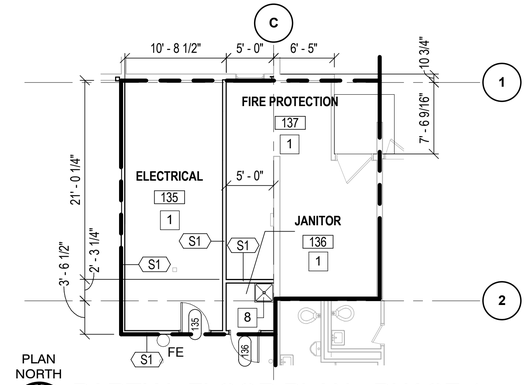

PARTIAL FLOOR PLAN - PHASE 1
SCALE: 1/8" = 1'-0"

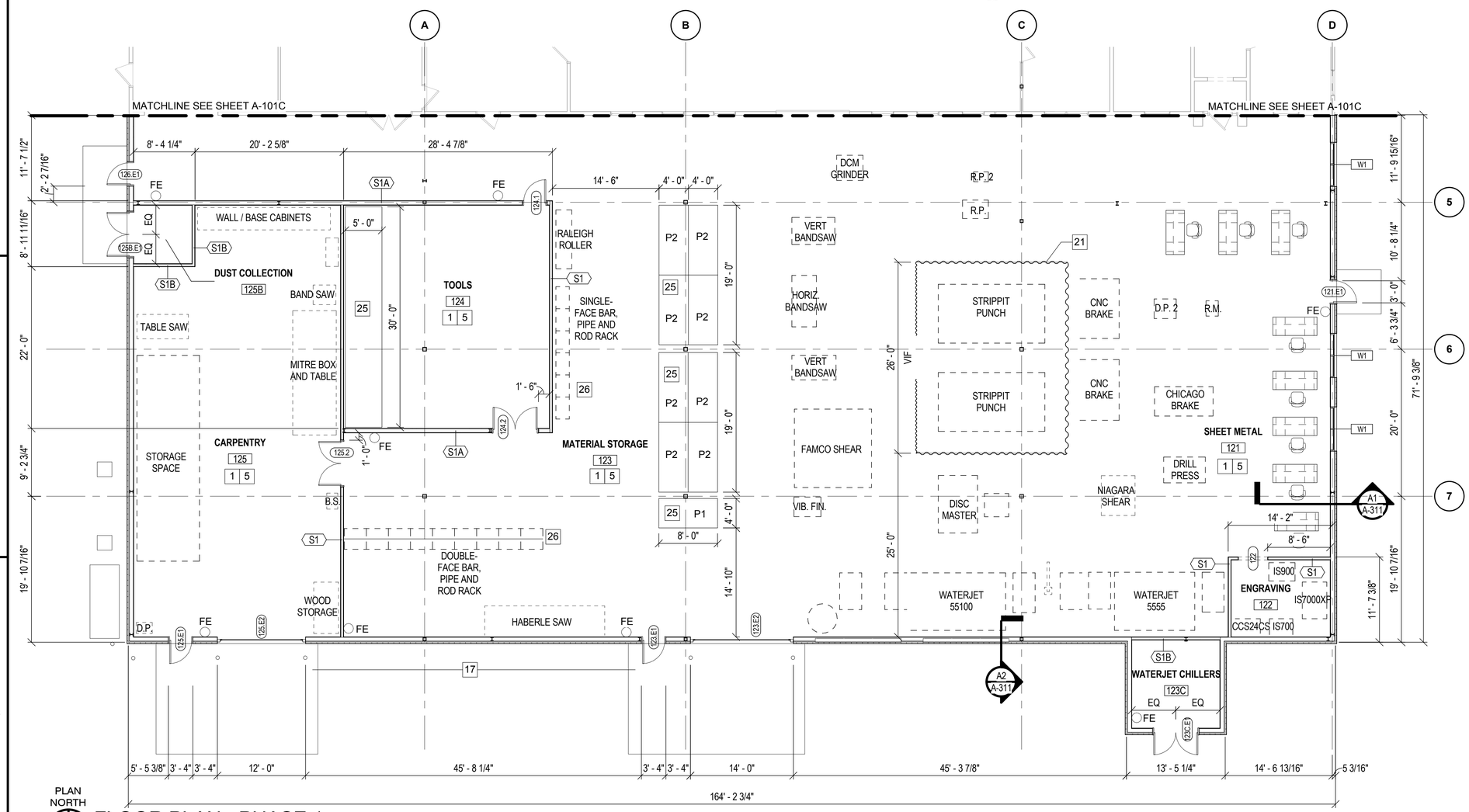

FLOOR PLAN - PHASE 1
SCALE: 1/8" = 1'-0"

NEW WORK KEY NOTES

1. NEW EXTERIOR WALL STRUCTURE AND FINISHES, INTERIOR WALL STRUCTURE AND FINISHES, FLOOR AND CEILING FINISHES IN THIS SPACE. REFER TO FINISH SCHEDULE ON A-600.
2. NOT USED THIS SHEET
3. NOT USED THIS SHEET
4. NOT USED THIS SHEET
5. NEW CONCRETE SLAB, SEE STRUCTURAL
6. NOT USED THIS SHEET
7. NOT USED THIS SHEET
8. MOP SINK, SEE PLUMBING
9. NOT USED THIS SHEET
10. NOT USED THIS SHEET
11. NOT USED THIS SHEET
12. NOT USED THIS SHEET
13. NOT USED THIS SHEET
14. NOT USED THIS SHEET
15. NOT USED THIS SHEET
16. NOT USED THIS SHEET
17. NEW CONCRETE PAD, SEE CIVIL
18. NOT USED THIS SHEET
19. NOT USED THIS SHEET
20. NOT USED THIS SHEET
21. OVERHEAD, ROLLING TRACK-MOUNTED ACOUSTICAL CURTAIN. CURTAIN TO BE MULTI-LAYER INDUSTRIAL-GRADE CURTAIN CONSISTING OF 1 LAYER QUILTED FIBERGLASS ABSORPTION MATERIAL ON EACH SIDE OF A 1 LB REINFORCED VINYL CURTAIN LAYER WITH A MINIMUM RATING OF STC 29. CURTAIN TO BE SUPPORTED BY MIN. 12 GA ROLL-FORMED STEEL CHANNEL, SUSPENDED PER THE MANUFACTURER'S RECOMMENDED INSTALLATION INSTRUCTIONS FROM THE STRUCTURE ABOVE. INSTALL TRACK ASSEMBLY DURING PHASE 1 CONSTRUCTION. HANG ACOUSTICAL CURTAIN AT THE END OF PHASE 3 CONSTRUCTION AFTER EQUIPMENT IS PLACED INTO FINAL LOCATIONS.
22. NOT USED THIS SHEET
23. NOT USED THIS SHEET
24. NOT USED THIS SHEET
25. PALLET RACKING WITH VERTICAL POST DIVIDERS, M-DIVIDERS, AND ACCESSORIES AS CORRDINATED WITH ACTIVITY. RACKING ANCHORED TO THE FLOOR. CONTRACTOR FURNISHES, CONTRACTOR INSTALLED. SEE D1/A-101A FOR INITIAL CONCEPT
26. PROPOSED FOOTPRINT LAYOUT OF BAR, PIPE AND ROD RACKS. FOR INFORMATION ONLY. NOT IN CONTRACT.

KEY PLAN:

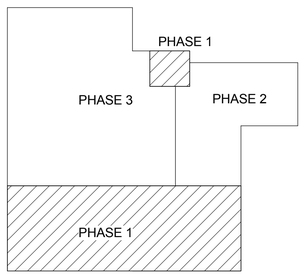

GRAPHIC SCALE:
1/8" =1'-0"
0' 4' 8' 16'

SYM	DESCRIPTION	DATE	APPR

NAVFAC

COMMONWEALTH OF VIRGINIA
JOHN B. ANDERSON III
Lic. No. 015146
3/18/2016
ARCHITECT

Wiley|Wilson | BURNS McDONNELL
JOINT VENTURE

A/E INFO
APPROVED
FOR COMMANDER NAVFAC / B.L.T.L.
ACTIVITY
SATISFACTORY TO DATE
DES JBA DRW JBA CHK LTC
PROJECT MANAGER
IPT TECH. BRANCH HEAD
CHIEF ENG/ARCH

DEPARTMENT OF THE NAVY
NAVAL FACILITIES ENGINEERING COMMAND
WEBSTER FIELD, NAS PATUXENT RIVER
NAVAL FACILITIES ENGINEERING COMMAND ~ WASHINGTON
ST. INIGOES, MD
NAVAL AIR STATION PATUXENT RIVER
ST. INIGOES, MD
BUILDING 8008 REPAIRS, ALTERATIONS AND ADDITION
FLOOR PLAN - PHASE 1

SCALE: AS NOTED
EPROJECT NO. 1183080
CONSTR. CONTR. NO. N40080-15-D-0452
NAVFAC DRAWING NO. 13078341
SHEET 57 OF 180
A-101A

DRAWFORM REVISION: 10 MAY 2014

UNCLASSIFIED/ /FOR OFFICIAL USE ONLY
FILE NAME: C:\Revit_Projects\86314_A_Central_jbanderson@burnsmcd.com.rvt
REV/DATE: 3/18/2016 9:15:31 AM

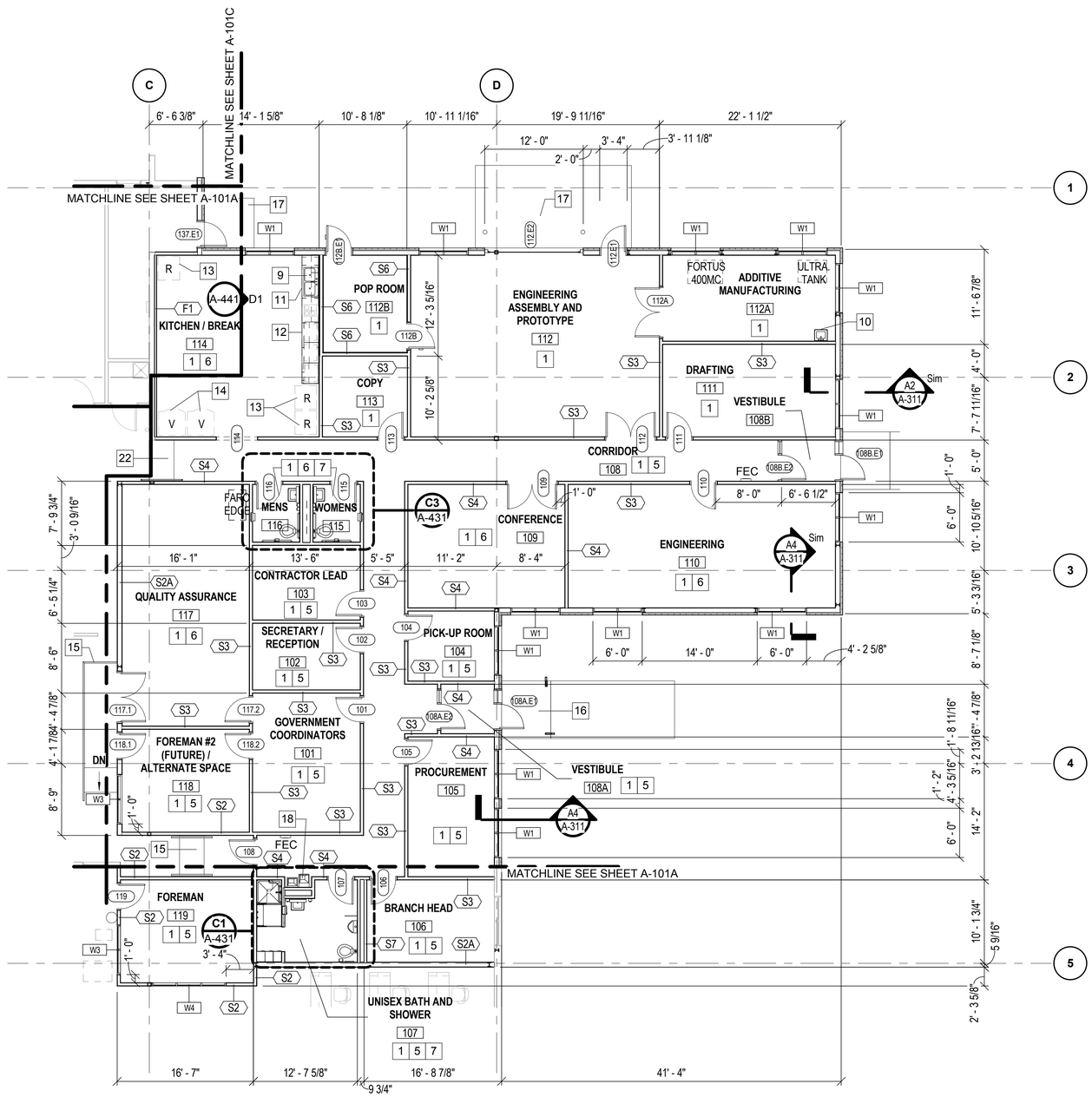

PLAN NORTH

FLOOR PLAN - PHASE 2

SCALE: 1/8" = 1'-0"

NEW WORK KEY NOTES

1. NEW WALL, FLOOR AND CEILING FINISHES IN THIS SPACE. REFER TO FINISH SCHEDULE ON A-600
2. NOT USED THIS SHEET
3. NOT USED THIS SHEET
4. NOT USED THIS SHEET
5. NEW CONCRETE SLAB, SEE STRUCTURAL
6. PARTIAL NEW CONCRETE SLAB TIED INTO EXISTING CONCRETE SLAB, SEE STRUCTURAL
7. NEW PLUMBING FIXTURES, TYP
8. MOP SINK
9. DOUBLE BOWL SS SINK
10. SINGLE BOWL UTILITY SINK
11. SINK BASE CABINET
12. CABINET W/ MICROWAVE SHELF
13. REFRIGERATOR, GFGI
14. VENDING MACHING, VENDOR-FURNISHED
15. NEW RAMP WITH SLIP-RESISTANT SURFACE AND REMOVABLE HANDRAIL AND GUARD
16. NEW CONCRETE PAD AND CANOPY AT PRIMARY ENTRY
17. NEW CONCRETE PAD, SEE CIVIL
18. ELECTRIC WATER COOLER
19. NOT USED THIS SHEET
20. NOT USED THIS SHEET
21. NOT USED THIS SHEET
22. NEW RAMP WITH SLIP-RESISTANT SURFACE AND HANDRAIL
23. NOT USED THIS SHEET
24. NOT USED THIS SHEET
25. NOT USED THIS SHEET
26. NOT USED THIS SHEET

KEY PLAN:

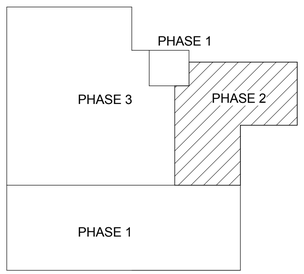

GRAPHIC SCALE:

1/8" =1'-0" 0' 4' 8' 16'

SYM	DESCRIPTION	DATE	APPR

NAVFAC

COMMONWEALTH OF VIRGINIA
JOHN B. ANDERSON III
Lic. No. 015146
3/18/2016
ARCHITECT

Wiley|Wilson | BURNS McDONNELL
JOINT VENTURE

A/E INFO

APPROVED
FOR COMMANDER NAVFAC / B.L.T.L.

ACTIVITY

SATISFACTORY TO DATE
DES JBA | DRW JBA | CHK LTC
PROJECT MANAGER
IPT TECH. BRANCH HEAD
CHIEF ENG/ARCH

DEPARTMENT OF THE NAVY
NAVAL FACILITIES ENGINEERING COMMAND
WEBSTER FIELD, NAS PATUXENT RIVER

NAVAL FACILITIES ENGINEERING COMMAND ~ WASHINGTON
ST. INIGOES, MD

NAVAL AIR STATION PATUXENT RIVER
ST. INIGOES, MD

BUILDING 8008 REPAIRS, ALTERATIONS AND ADDITION

FLOOR PLAN - PHASE 2

SCALE: AS NOTED
EPROJECT NO. 1183080
CONSTR. CONTR. NO. N40080-15-D-0452
NAVFAC DRAWING NO. 13078342
SHEET 58 OF 180

A-101B

DRAWFORM REVISION: 10 MAY 2014

FILE NAME: C:\Revit_Projects\86314_A_Central_jbanderson@burnsmcd.com.rvt
REV/DATE: 3/18/2016 8:15:40 AM

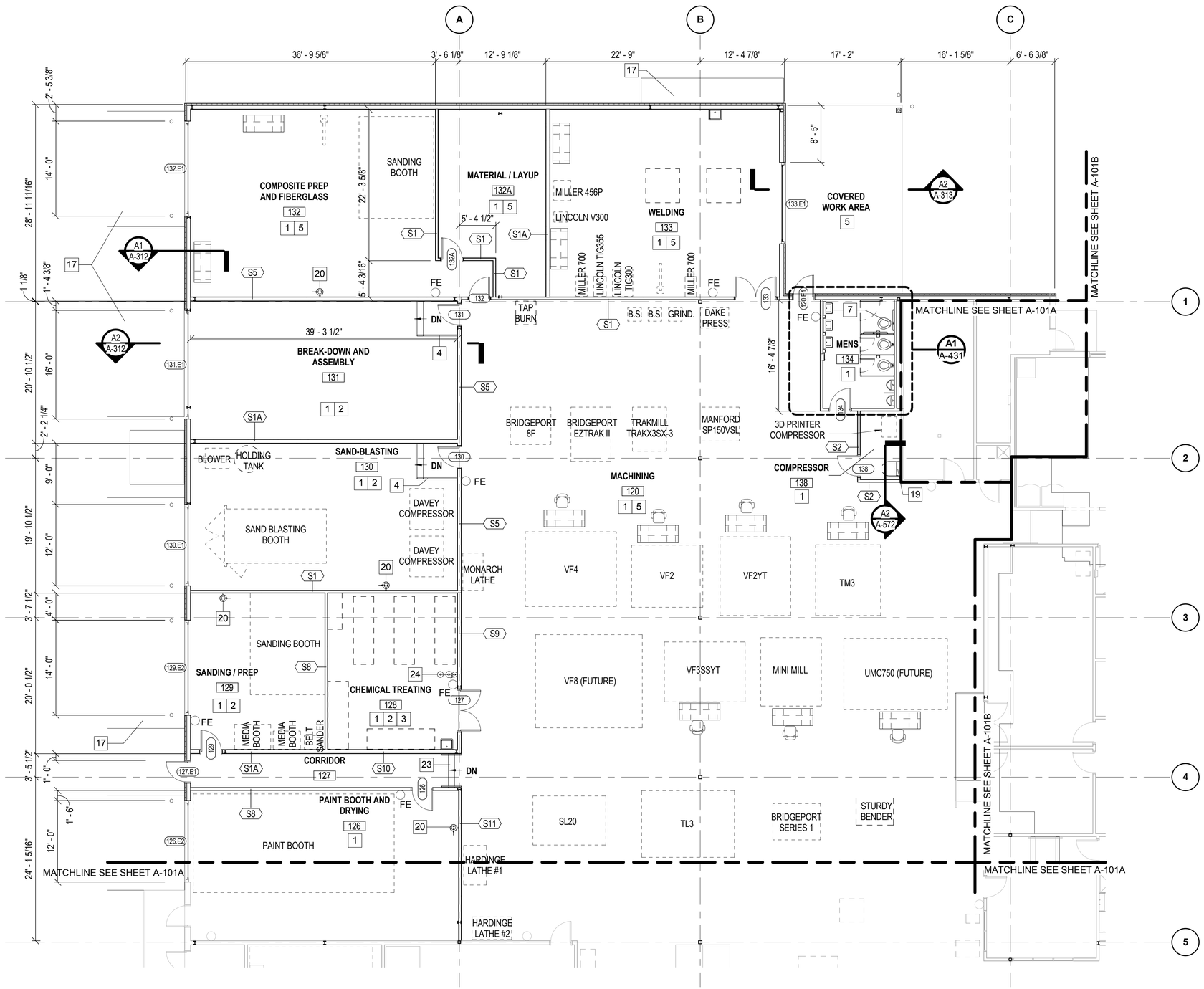

PLAN NORTH

FLOOR PLAN - PHASE 3

SCALE: 1/8" = 1'-0"

NEW WORK KEY NOTES

1. NEW WALL, FLOOR AND CEILING FINISHES IN THIS SPACE. REFER TO FINISH SCHEDULE ON A-600
2. CUT BACK EXISTING TOP SLAB AND TIE IN NEW SLAB TO EXISTING LOWER SLAB, SEE STRUCTURAL
3. NEW STEEL GRATE FLOORING ABOVE CONCRETE SLAB FLOORING FOR SPILL CONTAINMENT
4. NEW CONCRETE STAIR WITH SLIP-RESISTANT TREADS AND REMOVABLE HANDRAIL AND GUARD
5. NEW CONCRETE SLAB, SEE STRUCTURAL
6. PARTIAL NEW CONCRETE SLAB TIED INTO EXISTING CONCRETE SLAB, SEE STRUCTURAL
7. NEW PLUMBING FIXTURES, TYP
8. NOT USED THIS SHEET
9. NOT USED THIS SHEET
10. NOT USED THIS SHEET
11. NOT USED THIS SHEET
12. NOT USED THIS SHEET
13. NOT USED THIS SHEET
14. NOT USED THIS SHEET
15. NOT USED THIS SHEET
16. NOT USED THIS SHEET
17. NEW CONCRETE PAD, SEE CIVIL
18. NOT USED THIS SHEET
19. LADDER TO 3'-0" X 3'-0" ROOF HATCH ABOVE
20. EMERGENCY EYE WASH STATION
21. NOT USED THIS SHEET
22. NOT USED THIS SHEET
23. NEW STAIRS AND HANDRAIL
24. EMERGENCY EYE WASH AND SHOWER STATION
25. NOT USED THIS SHEET
26. NOT USED THIS SHEET

KEY PLAN:

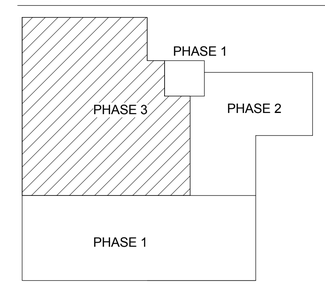

GRAPHIC SCALE:

1/8" =1'-0" 0' 4' 8' 16'

SYM	DESCRIPTION	DATE	APPR

NAVFAC

COMMONWEALTH OF VIRGINIA
JOHN B. ANDERSON III
Lic. No. 015146
3/18/2016
ARCHITECT

Wiley|Wilson | BURNS McDONNELL
JOINT VENTURE

A/E INFO

APPROVED
FOR COMMANDER NAVFAC / B.L.T.L.

ACTIVITY

SATISFACTORY TO DATE

DES	DRW	CHK
JBA	JBA	LTC

PROJECT MANAGER
IPT TECH. BRANCH HEAD
CHIEF ENG/ARCH

DEPARTMENT OF THE NAVY
NAVAL FACILITIES ENGINEERING COMMAND
WEBSTER FIELD, NAS PATUXENT RIVER

NAVAL FACILITIES ENGINEERING COMMAND
ST. INIGOES, MD ~ WASHINGTON

NAVAL AIR STATION PATUXENT RIVER
ST. INIGOES, MD

BUILDING 8008 REPAIRS, ALTERATIONS AND ADDITION

FLOOR PLAN - PHASE 3

SCALE: AS NOTED
EPROJECT NO. 1183080
CONSTR. CONTR. NO. N40080-15-D-0452
NAVFAC DRAWING NO. 13078343
SHEET 59 OF 180
A-101C

DRAWFORM REVISION: 10 MAY 2014

FILE NAME: C:\Revit_Projects\86314_A_Central_jbanderson@burnsmcd.com.rvt
REVDATE: 5/9/2016 2:56:31 PM

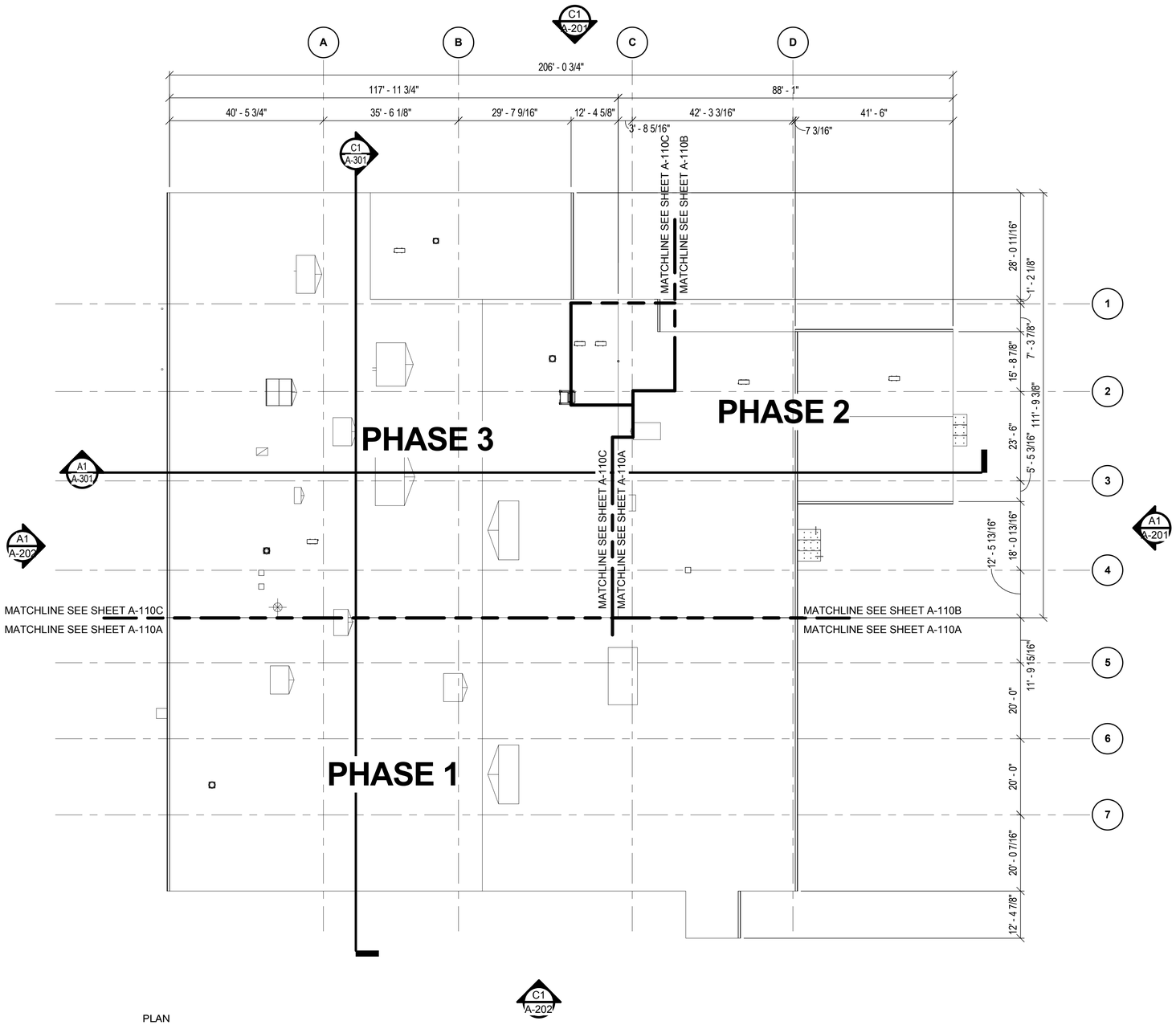

PLAN NORTH

OVERALL ROOF PLAN

SCALE: 1/16" = 1'-0"

GENERAL ROOF PLAN NOTES:

1. FOR ARCHITECTURAL GENERAL NOTES, MATERIAL LEGEND, AND ABBREVIATIONS REFER TO SHEET AG001.
2. THE CONTRACTOR SHALL VERIFY ALL DIMENSIONS, ELEVATIONS AND SITE CONDITIONS BEFORE BEGINNING WORK AND FABRICATION. THE CONTRACT OFFICER SHALL BE NOTIFIED IN WRITING IMMEDIATELY OF ANY DISCREPANCIES OR INCONSISTENCIES. IN NO CASE SHALL DIMENSIONS BE SCALED OFF PLANS, SECTIONS, OR DETAILS FROM THESE DRAWINGS.
3. FOR DIMENSIONS OR ADDITIONAL INFORMATION NOT ILLUSTRATED, REFER TO LARGER SCALE DRAWINGS.

KEY PLAN:

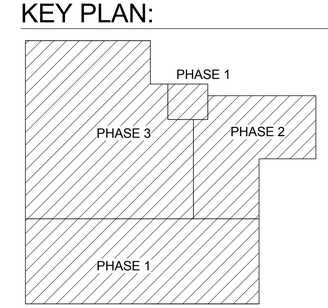

GRAPHIC SCALE:

1/16" =1'-0"

0' 8' 16' 32'

SYM	DESCRIPTION	DATE	APPR

NAVFAC

COMMONWEALTH OF VIRGINIA
JOHN B. ANDERSON III
Lic. No. 015146
3/18/2016
ARCHITECT

Wiley|Wilson | BURNS McDONNELL
JOINT VENTURE

A/E INFO

APPROVED
FOR COMMANDER NAVFAC / B.L.T.L.

ACTIVITY

SATISFACTORY TO DATE
DES JBA | DRW JBA | CHK LTC
PROJECT MANAGER
IPT TECH. BRANCH HEAD
CHIEF ENG/ARCH

DEPARTMENT OF THE NAVY
NAVAL FACILITIES ENGINEERING COMMAND
WEBSTER FIELD, NAS PATUXENT RIVER
NAVAL FACILITIES ENGINEERING COMMAND ~ WASHINGTON
ST. INIGOES, MD
NAVAL AIR STATION PATUXENT RIVER
ST. INIGOES, MD
BUILDING 8008 REPAIRS, ALTERATIONS AND ADDITION
OVERALL ROOF PLAN

SCALE: AS NOTED
EPROJECT NO. 1183080
CONSTR. CONTR. NO. N40080-15-D-0452
NAVFAC DRAWING NO. 13078344
SHEET 60 OF 180
A-110

DRAWFORM REVISION: 10 MAY 2014

FILE NAME: C:\Revit_Projects\86314_A_Central_jbanderson@burnsmcd.com.rvt
REV/DATE: 3/18/2016 9:15:53 AM

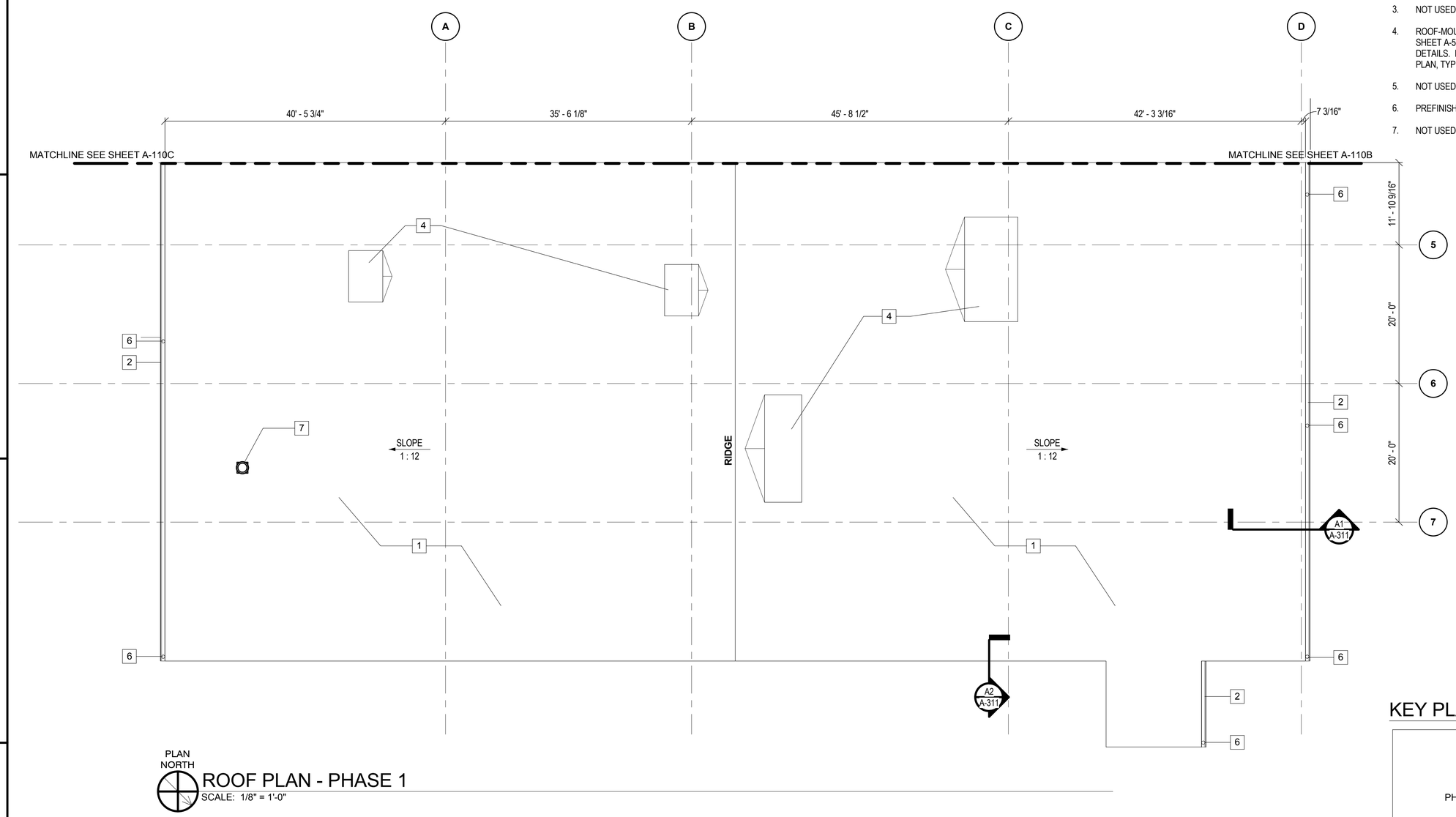

PLAN NORTH

ROOF PLAN - PHASE 1

SCALE: 1/8" = 1'-0"

NEW WORK KEY NOTES

1. MODIFIED BITUMEN ROOFING SYSTEM OVER R-25 (5" THICK NOMINAL) RIGID POLYISO INSULATION
2. PREFINISHED 8" SQUARE METAL GUTTER SYSTEM, TYP
3. NOT USED THIS SHEET
4. ROOF-MOUNTED EQUIPMENT, SEE MECHANICAL. REFER TO SHEET A-571 FOR TYPICAL PENETRATION AND CURB DETAILS. INSTALL CRICKETS AT ROOF CURBS AS SHOWN ON PLAN, TYP
5. NOT USED THIS SHEET
6. PREFINISHED 6" ROUND METAL DOWNSPOUT
7. NOT USED THIS SHEET

KEY PLAN:

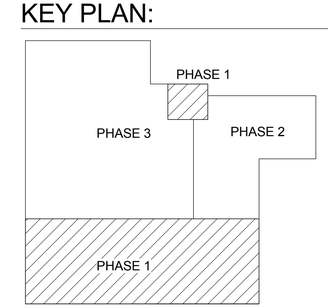

GRAPHIC SCALE:

1/8" =1'-0" 0' 4' 8' 16'

SYM	DESCRIPTION	DATE	APPR

NAVFAC

COMMONWEALTH OF VIRGINIA
JOHN B. ANDERSON III
Lic. No. 015146
3/18/2016
ARCHITECT

Wiley|Wilson | BURNS McDONNELL
JOINT VENTURE

A/E INFO.

APPROVED
FOR COMMANDER NAVFAC / B.L.T.L.

ACTIVITY

SATISFACTORY TO DATE

DES JBA	DRW JBA	CHK LTC

PROJECT MANAGER
IPT TECH. BRANCH HEAD
CHIEF ENG/ARCH

DEPARTMENT OF THE NAVY
NAVAL FACILITIES ENGINEERING COMMAND
WEBSTER FIELD, NAS PATUXENT RIVER
NAVAL FACILITIES ENGINEERING COMMAND ~ WASHINGTON
ST. INIGOES, MD
NAVAL AIR STATION PATUXENT RIVER
ST. INIGOES, MD
BUILDING 8008 REPAIRS, ALTERATIONS AND ADDITION
ROOF PLAN - PHASE 1

SCALE: AS NOTED
EPROJECT NO. 1183080
CONSTR. CONTR. NO. N40080-15-D-0452
NAVFAC DRAWING NO. 13078345
SHEET 61 OF 180

A-110A

DRAWFORM REVISION: 10 MAY 2014

FILE NAME: C:\Revit_Projects\86314_A_Central_jbanderson@burnsmcd.com.rvt
REVDATE: 3/18/2016 9:15:58 AM

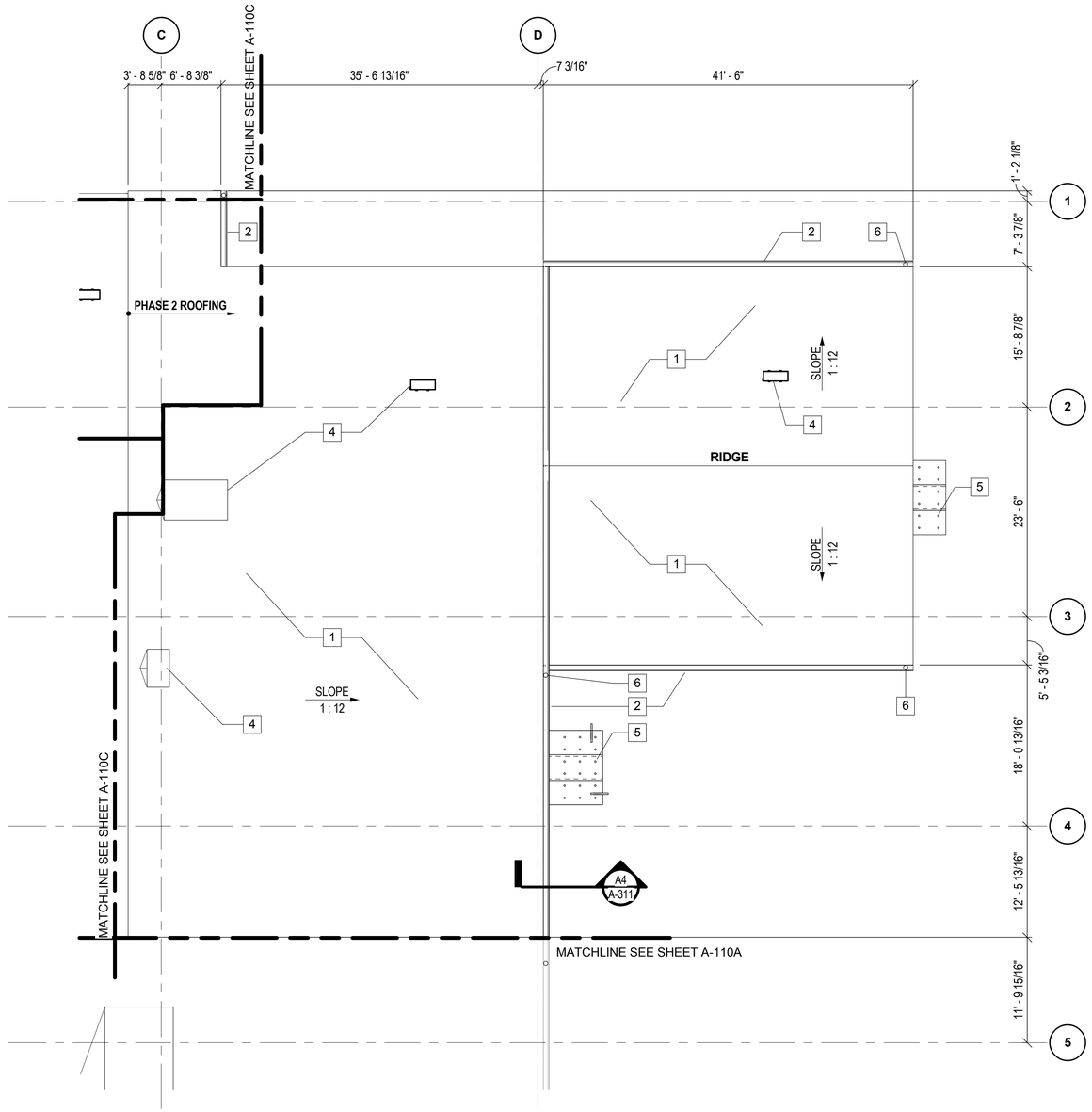

PLAN NORTH

ROOF PLAN - PHASE 2

SCALE: 1/8" = 1'-0"

NEW WORK KEY NOTES

1. MODIFIED BITUMEN ROOFING SYSTEM OVER R-25 (5" THICK NOMINAL) RIGID POLYISO INSULATION
2. PREFINISHED 8" SQUARE METAL GUTTER SYSTEM, TYP, DRAINING TO PREFINISHED 6" ROUND METAL DOWNSPOUTS.
3. NOT USED THIS SHEET
4. ROOF-MOUNTED EQUIPMENT, SEE MECHANICAL. REFER TO SHEET A-571 FOR TYPICAL PENETRATION AND CURB DETAILS. INSTALL CRICKETS AT ROOF CURBS AS SHOWN ON PLAN, TYP
5. ALUMINUM AND GLASS ENTRY CANOPY BELOW
6. PREFINISHED 6" ROUND METAL DOWNSPOUT
7. NOT USED THIS SHEET

KEY PLAN:

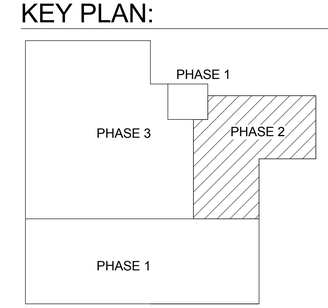

GRAPHIC SCALE:

1/8" =1'-0" 0' 4' 8' 16'

SYM	DESCRIPTION	DATE	APPR

NAVFAC

COMMONWEALTH OF VIRGINIA
JOHN B. ANDERSON III
Lic. No. 015146
3/18/2016
ARCHITECT

Wiley|Wilson | BURNS McDONNELL
JOINT VENTURE

A/E INFO

APPROVED
FOR COMMANDER NAVFAC / B.L.T.L.

ACTIVITY

SATISFACTORY TO DATE
DES JBA | DRW JBA | CHK LTC
PROJECT MANAGER
IPT TECH. BRANCH HEAD
CHIEF ENG/ARCH

DEPARTMENT OF THE NAVY
NAVAL FACILITIES ENGINEERING COMMAND
WEBSTER FIELD, NAS PATUXENT RIVER

NAVAL FACILITIES ENGINEERING COMMAND ~ WASHINGTON
ST. INIGOES, MD

NAVAL AIR STATION PATUXENT RIVER
ST. INIGOES, MD

BUILDING 8008 REPAIRS, ALTERATIONS AND ADDITION

ROOF PLAN - PHASE 2

SCALE: AS NOTED
EPROJECT NO. 1183080
CONSTR. CONTR. NO. N40080-15-D-0452
NAVFAC DRAWING NO. 13078346
SHEET 62 OF 180

A-110B

DRAWFORM REVISION: 10 MAY 2014

FILE NAME: C:\Revit_Projects\86314_A_Central_jbanderson@burnsmcd.com.rvt
REV/DATE: 3/18/2016 8:16:03 AM

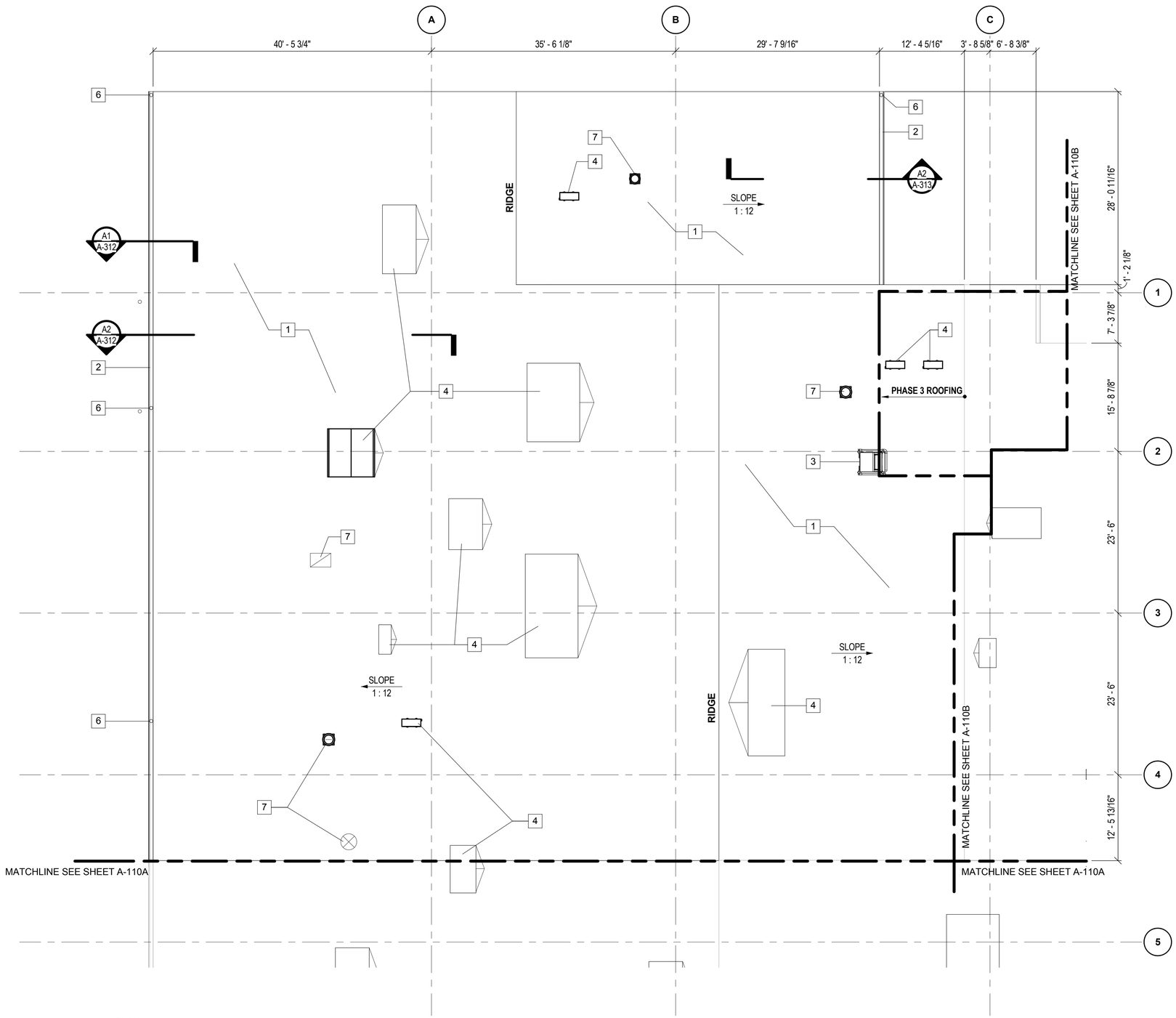

PLAN NORTH

ROOF PLAN - PHASE 3

SCALE: 1/8" = 1'-0"

NEW WORK KEY NOTES

1. MODIFIED BITUMEN ROOFING SYSTEM OVER R-25 (5" THICK NOMINAL) RIGID POLYISO INSULATION
2. PREFINISHED 8" SQUARE METAL GUTTER SYSTEM, TYP.
3. ROOF ACCESS LADDER AND HATCH. SEE SHEET A-572.
4. ROOF-MOUNTED EQUIPMENT, SEE MECHANICAL. REFER TO SHEET A-571 FOR TYPICAL PENETRATION AND CURB DETAILS. INSTALL CRICKETS AT ROOF CURBS AS SHOWN ON PLAN, TYP
5. NOT USED THIS SHEET
6. PREFINISHED 6" ROUND METAL DOWNSPOUT
7. EXHAUST, SEE MECHANICAL

KEY PLAN:

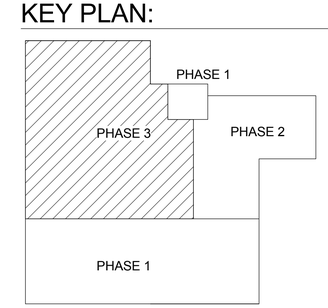

GRAPHIC SCALE:

1/8" =1'-0" 0' 4' 8' 16'

SYM	DESCRIPTION	DATE	APPR

NAVFAC

COMMONWEALTH OF VIRGINIA
JOHN B. ANDERSON III
Lic. No. 015146
3/18/2016
ARCHITECT

Wiley|Wilson | BURNS McDONNELL
JOINT VENTURE

A/E INFO.

APPROVED
FOR COMMANDER NAVFAC / B.L.T.L.

ACTIVITY

SATISFACTORY TO DATE

DES	DRW	CHK
JBA	JBA	LTC

PROJECT MANAGER
IPT TECH. BRANCH HEAD
CHIEF ENG/ARCH

DEPARTMENT OF THE NAVY
NAVAL FACILITIES ENGINEERING COMMAND
WEBSTER FIELD, NAS PATUXENT RIVER
NAVAL FACILITIES ENGINEERING COMMAND ~ WASHINGTON
ST. INIGOES, MD
NAVAL AIR STATION PATUXENT RIVER
ST. INIGOES, MD

BUILDING 8008 REPAIRS, ALTERATIONS AND ADDITION

ROOF PLAN - PHASE 3

SCALE: AS NOTED
EPROJECT NO. 1183080
CONSTR. CONTR. NO. N40080-15-D-0452
NAVFAC DRAWING NO. 13078347
SHEET 63 OF 180

A-110C

DRAWFORM REVISION: 10 MAY 2014

FILE NAME: C:\Revit_Projects\86314_A_Central_jbanderson@burnsmcd.com.rvt
REVDATE: 3/18/2016 9:16:09 AM

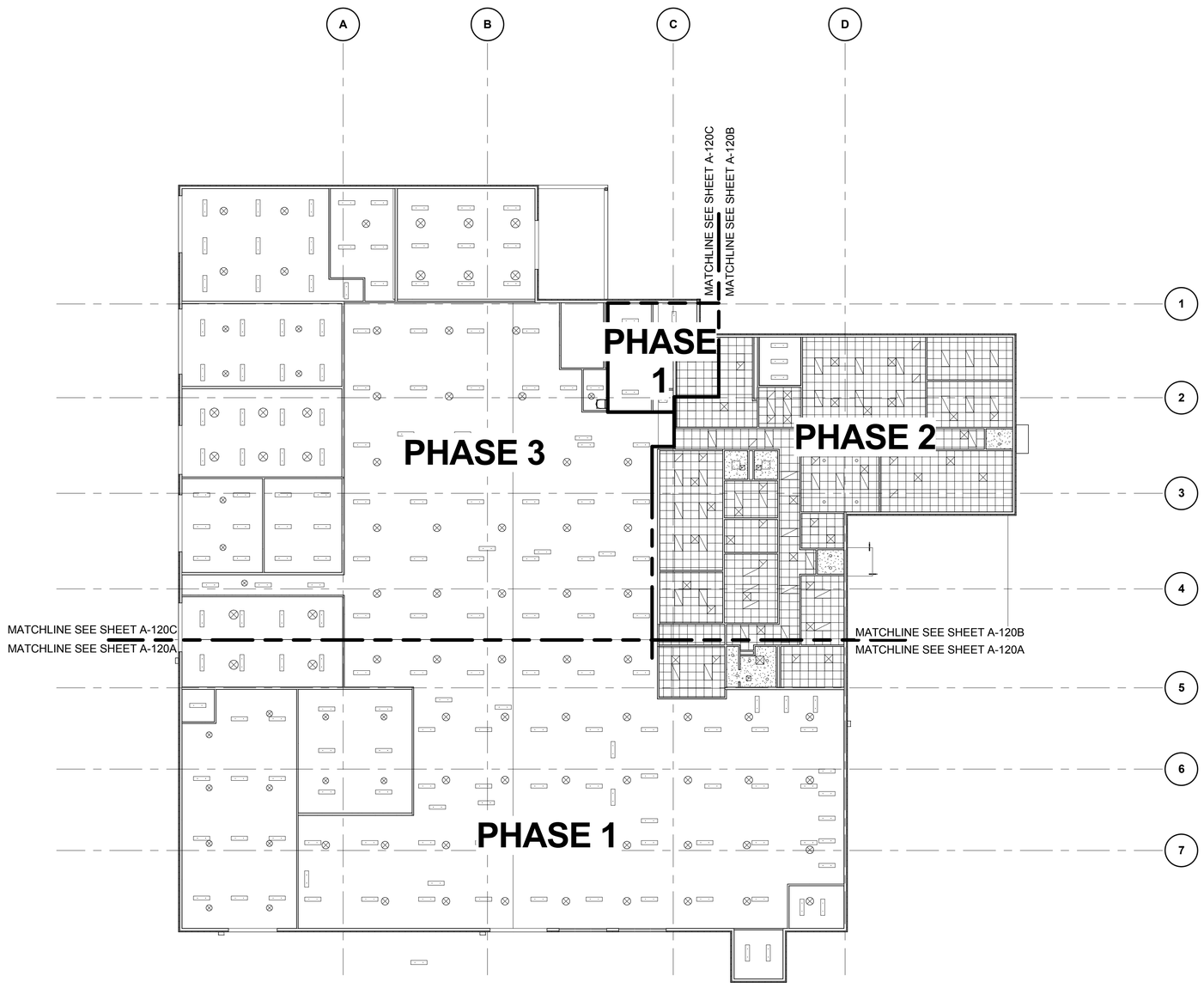

PLAN NORTH

OVERALL REFLECTED CEILING PLAN

SCALE: 1/16" = 1'-0"

GENERAL REFLECTED CEILING PLAN NOTES:

1. CEILING HEIGHT SHALL BE 8'-0" UNLESS NOTED OTHERWISE FOR ALL AREAS WITH CEILINGS.
2. FOR ARCHITECTURAL GENERAL NOTES, MATERIAL LEGEND, AND ABBREVIATIONS REFER TO SHEET AG001.
3. ARCHITECTURAL CEILING PLANS SHOW DIMENSIONING AND PLACEMENT OF VARIOUS CEILING MOUNTED DEVICES. REFER TO MEP DRAWINGS AND SPECIFICATIONS FOR ALL OTHER INFORMATION FOR MEP SYSTEMS INCLUDING BUT NOT LIMITED TO FIRE SUPPRESSION, FIRE ALARM DEVICES, SECURITY DEVICES, EXIT DEVICES, DIFFUSERS, LIGHTING, LIGHTING CONTROL DEVICES, AND ACCESS PANELS.
4. CEILING HEIGHTS ARE SHOWN TO HEIGHT ABOVE FINISH FLOOR.
5. ALL CEILING GRIDS TO BE CENTERED IN ROOMS UNLESS NOTED OTHERWISE.
6. ALL LIGHTS, SPEAKERS, SPRINKLERS, SIGNAGE, STROBES AND OTHER HARDWARE INSTALLED IN TILED CEILING SYSTEMS TO BE CENTERED IN TILES IN BOTH DIRECTIONS UNLESS NOTED OTHERWISE.
7. ALIGN ALL CEILING MOUNTED DEVICES.
8. REFERENCE ROOM FINISH SCHEDULE FOR ADDITIONAL CEILING FINISH INFORMATION.
9. CEILING MOUNTED EXIT SIGNS TO BE CENTERED WITHIN DOOR FRAME OR OPENING. MOUNT 4" OFF FACE OF WALL.
10. ALL SPRINKLERS, JUNCTION BOXES & SMOKE DETECTORS TO ALIGN WITH ADJACENT LIGHT FIXTURES, UNLESS NOTED OTHERWISE.
11. COORDINATE LOCATIONS OF CEILING ACCESS PANELS WITH THE FINAL LOCATIONS OF MECHANICAL EQUIPMENT AS REQUIRED TO SERVICE EQUIPMENT AND TO PROVIDE ACCESS TO ALL ABOVE CEILING EQUIPMENT.

CEILING LEGEND

- EXPOSED CEILING
- 2' x 2' ACOUSTICAL CEILING TILE
- GYPSUM BOARD - PAINT
- 1' x 4' INDUSTRIAL WRAP OR VAPOR TIGHT LED FIXTURE- SUSPENDED
- 2' x 4' LED FIXTURE - RECESSED
- 2' x 2' LED FIXTURE - RECESSED
- RECESSED LED DOWNLIGHT
- 10' - 0" CEILING HEIGHT ABOVE FINISH FLOOR
- HVAC AIR SUPPLY GRILLE
- HVAC LINEAR AIR SUPPLY GRILLE
- HVAC EXHAUST OR RETURN GRILLE
- EXIT SIGN

KEY PLAN:

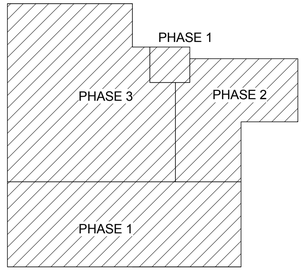

GRAPHIC SCALE:

1/16" =1'-0" 0' 8' 16' 32'

SYM	DESCRIPTION	DATE	APPR

NAVFAC

COMMONWEALTH OF VIRGINIA
JOHN B. ANDERSON III
Lic. No. 015146
3/18/2016
ARCHITECT

Wiley|Wilson | BURNS McDONNELL
JOINT VENTURE

A/E INFO

APPROVED
FOR COMMANDER NAVFAC / B.L.T.L.
ACTIVITY
SATISFACTORY TO DATE
DES JBA | DRW JBA | CHK LTC
PROJECT MANAGER
IPT TECH. BRANCH HEAD
CHIEF ENG/ARCH

DEPARTMENT OF THE NAVY
NAVAL FACILITIES ENGINEERING COMMAND
WEBSTER FIELD, NAS PATUXENT RIVER
NAVAL FACILITIES ENGINEERING COMMAND ~ WASHINGTON
ST. INIGOES, MD
NAVAL AIR STATION PATUXENT RIVER
ST. INIGOES, MD
BUILDING 8008 REPAIRS, ALTERATIONS AND ADDITION
OVERALL REFLECTED CEILING PLAN

SCALE: AS NOTED
EPROJECT NO. 1183080
CONSTR. CONTR. NO. N40080-15-D-0452
NAVFAC DRAWING NO. 13078348
SHEET 64 OF 180
A-120

DRAWFORM REVISION: 10 MAY 2014

FILE NAME: C:\Revit_Projects\86314_A_Central_jbanderson@burnsmcd.com.rvt
REVDATE: 3/18/2016 9:16:16 AM

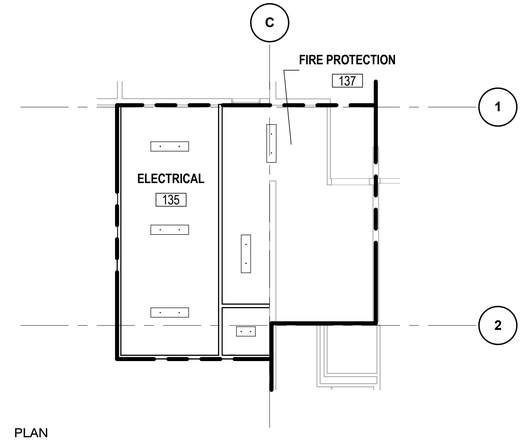

PLAN NORTH

PARTIAL REFLECTED CEILING PLAN - PHASE 1

SCALE: 1/8" = 1'-0"

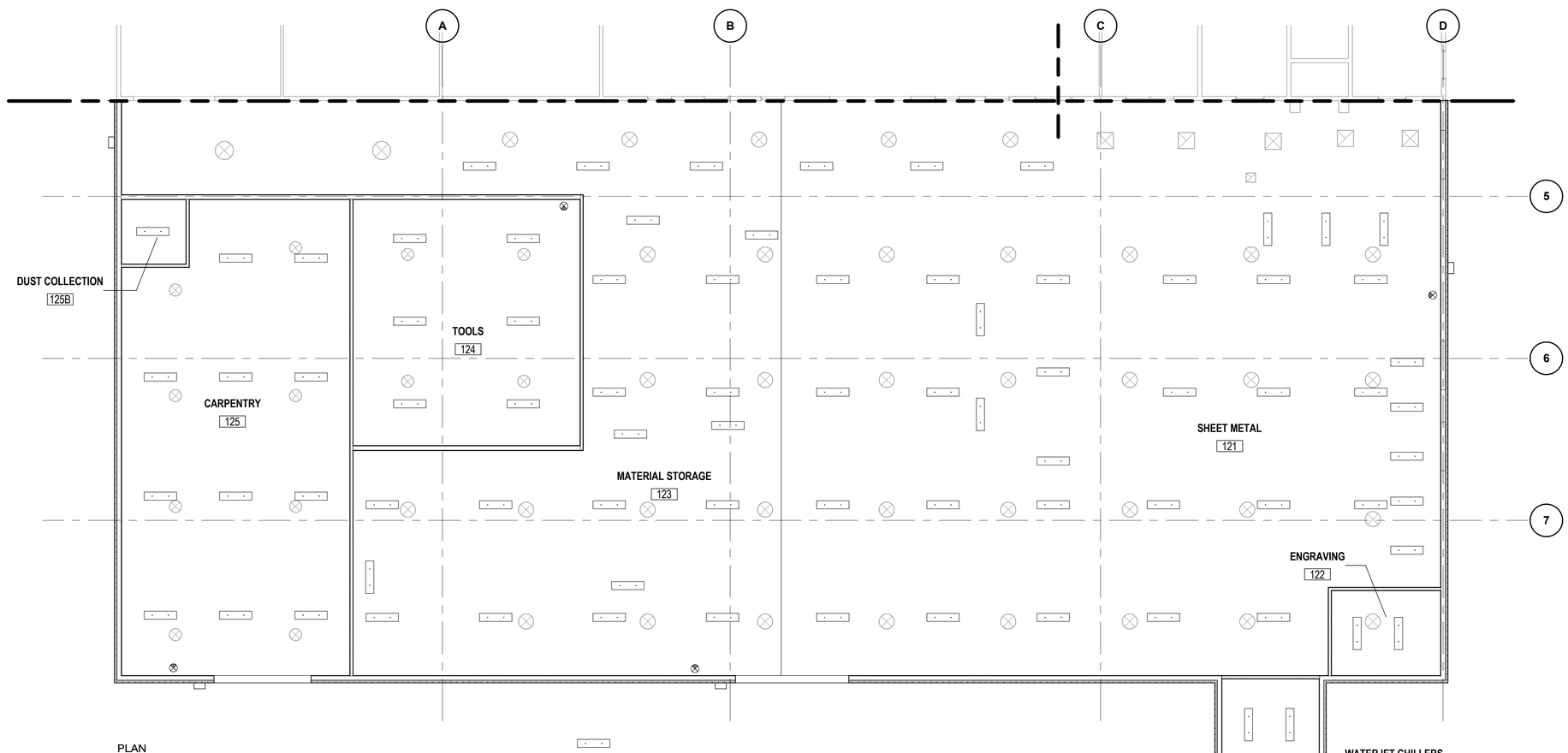

PLAN NORTH

REFLECTED CEILING PLAN - PHASE 1

SCALE: 1/8" = 1'-0"

CEILING LEGEND

- EXPOSED CEILING
- 2' x 2' ACOUSTICAL CEILING TILE
- GYPSUM BOARD - PAINT
- 1' x 4' INDUSTRIAL WRAP OR VAPOR TIGHT LED FIXTURE- SUSPENDED
- 2' x 4' LED FIXTURE - RECESSED
- 2' x 2' LED FIXTURE - RECESSED
- RECESSED LED DOWNLIGHT
- 10' - 0" CEILING HEIGHT ABOVE FINISH FLOOR
- HVAC AIR SUPPLY GRILLE
- HVAC LINEAR AIR SUPPLY GRILLE
- HVAC EXHAUST OR RETURN GRILLE
- EXIT SIGN

KEY PLAN:

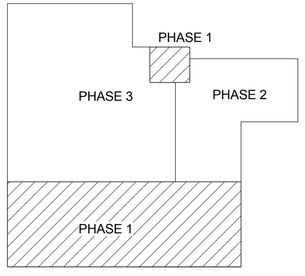

GRAPHIC SCALE:

1/8" =1'-0" 0' 4' 8' 16'

SYM	DESCRIPTION	DATE	APPR

NAVFAC

COMMONWEALTH OF VIRGINIA
JOHN B. ANDERSON III
Lic. No. 015146
3/18/2016
ARCHITECT

Wiley|Wilson | BURNS McDONNELL
JOINT VENTURE

A/E INFO.

APPROVED
FOR COMMANDER NAVFAC / B.L.T.L.

ACTIVITY

SATISFACTORY TO DATE

DES JBA	DRW JBA	CHK LTC

PROJECT MANAGER
IPT TECH. BRANCH HEAD
CHIEF ENG/ARCH

DEPARTMENT OF THE NAVY
NAVAL FACILITIES ENGINEERING COMMAND
WEBSTER FIELD, NAS PATUXENT RIVER
NAVAL FACILITIES ENGINEERING COMMAND ~ WASHINGTON
ST. INIGOES, MD
NAVAL AIR STATION PATUXENT RIVER
ST. INIGOES, MD
BUILDING 8008 REPAIRS, ALTERATIONS AND ADDITION
REFLECTED CEILING PLAN - PHASE 1

SCALE: AS NOTED
EPROJECT NO. 1183080
CONSTR. CONTR. NO. N40080-15-D-0452
NAVFAC DRAWING NO. 13078349
SHEET 65 OF 180
A-120A

DRAWFORM REVISION: 10 MAY 2014

FILE NAME: C:\Revit_Projects\86314_A_Central_jbanderson@burnsmcd.com.rvt
REVDATE: 3/18/2016 9:16:21 AM

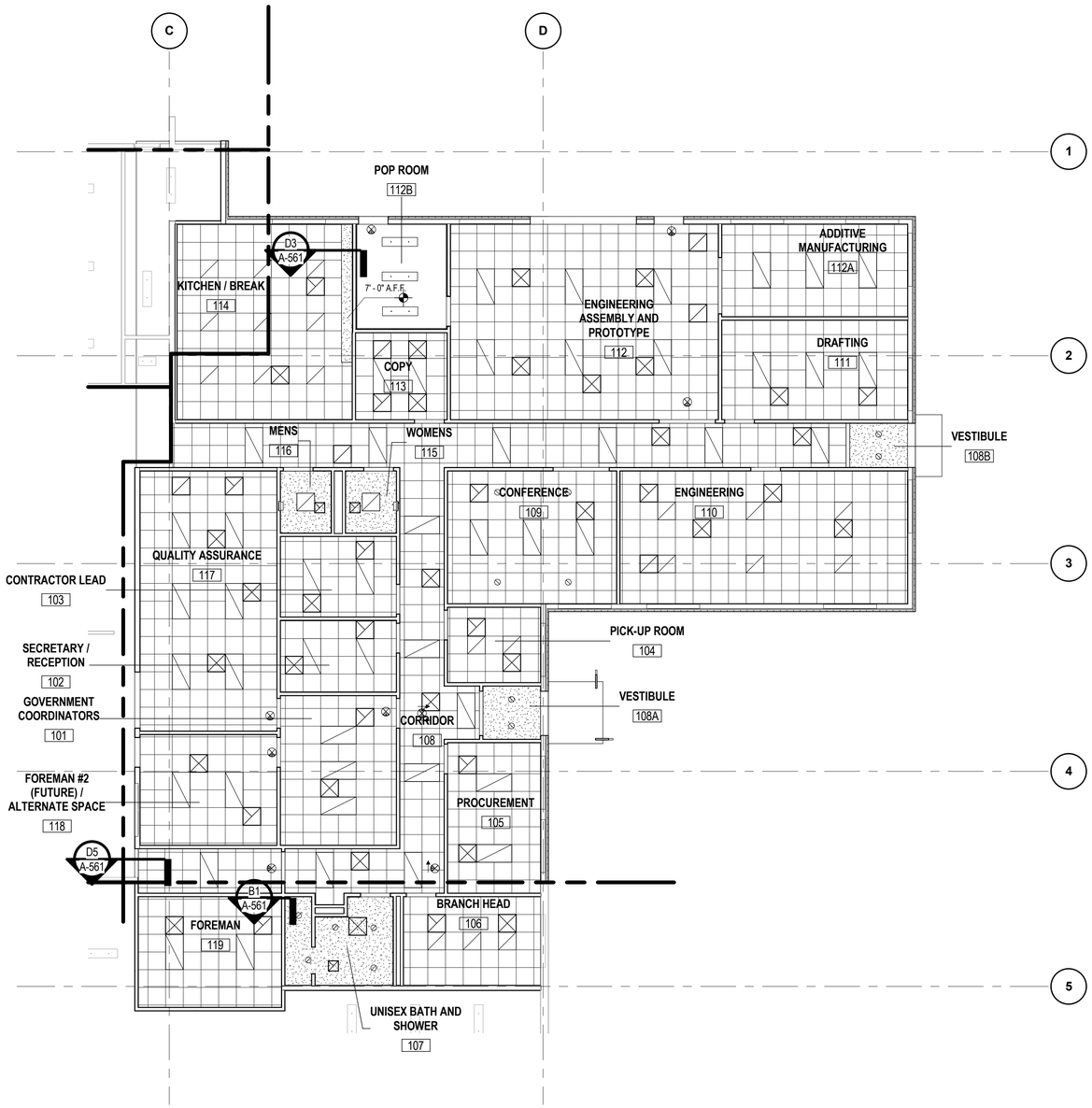

REFLECTED CEILING PLAN - PHASE 2

SCALE: 1/8" = 1'-0"

CEILING LEGEND

- EXPOSED CEILING
- 2' x 2' ACOUSTICAL CEILING TILE
- GYPSUM BOARD - PAINT
- 1' x 4' INDUSTRIAL WRAP OR VAPOR TIGHT LED FIXTURE- SUSPENDED
- 2' x 4' LED FIXTURE - RECESSED
- 2' x 2' LED FIXTURE - RECESSED
- RECESSED LED DOWNLIGHT
- 10' - 0" CEILING HEIGHT ABOVE FINISH FLOOR
- HVAC AIR SUPPLY GRILLE
- HVAC LINEAR AIR SUPPLY GRILLE
- HVAC EXHAUST OR RETURN GRILLE
- EXIT SIGN

KEY PLAN:

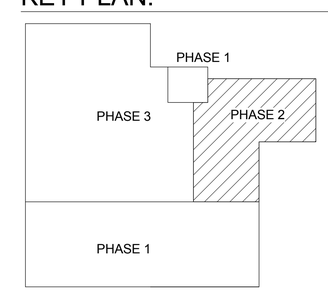

GRAPHIC SCALE:

1/16" =1'-0" 0' 8' 16' 32'

SYM	DESCRIPTION	DATE	APPR

NAVFAC

COMMONWEALTH OF VIRGINIA
JOHN B. ANDERSON III
Lic. No. 015146
3/18/2016
ARCHITECT

Wiley|Wilson | BURNS McDONNELL
JOINT VENTURE

A/E INFO

APPROVED
FOR COMMANDER NAVFAC / B.L.T.L.

ACTIVITY

SATISFACTORY TO DATE

DES	JBA	DRW	JBA	CHK	LTC

PROJECT MANAGER
IPT TECH. BRANCH HEAD
CHIEF ENG/ARCH

DEPARTMENT OF THE NAVY
NAVAL FACILITIES ENGINEERING COMMAND
WEBSTER FIELD, NAS PATUXENT RIVER

NAVAL FACILITIES ENGINEERING COMMAND ~ WASHINGTON
ST. INIGOES, MD

NAVAL AIR STATION PATUXENT RIVER
ST. INIGOES, MD

BUILDING 8008 REPAIRS, ALTERATIONS AND ADDITION

REFLECTED CEILING PLAN - PHASE 2

SCALE: AS NOTED
EPROJECT NO. 1183080
CONSTR. CONTR. NO. N40080-15-D-0452
NAVFAC DRAWING NO. 13078350
SHEET 66 OF 180

A-120B

DRAWFORM REVISION: 10 MAY 2014

FILE NAME: C:\Revit_Projects\86314_A_Central_jbanderson@burnsmcd.com.rvt
REVDATE: 3/18/2016 9:16:27 AM

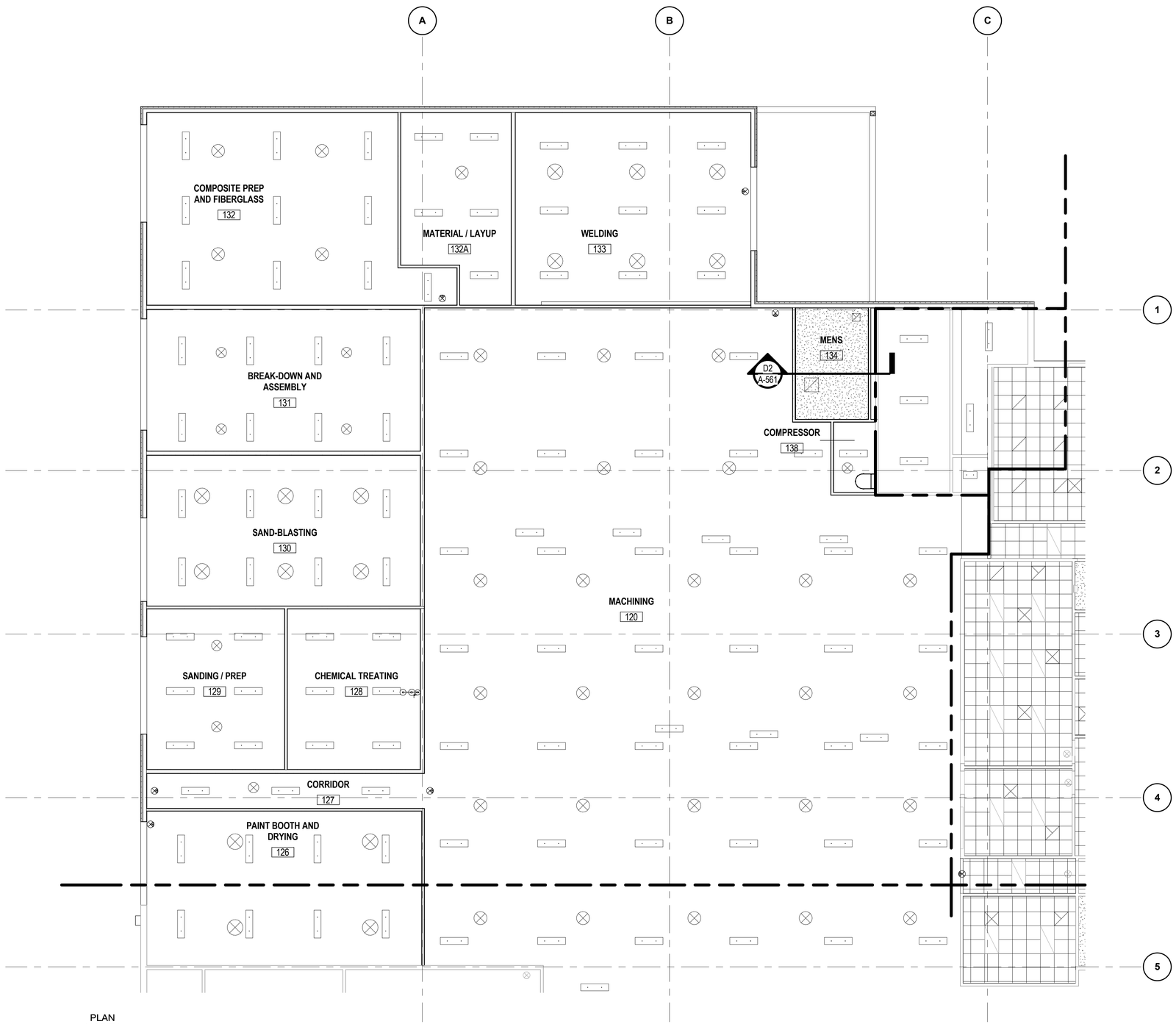

PLAN NORTH

REFLECTED CEILING PLAN - PHASE 3

SCALE: 1/8" = 1'-0"

CEILING LEGEND

- EXPOSED CEILING
- 2' x 2' ACOUSTICAL CEILING TILE
- GYPSUM BOARD - PAINT
- 1' x 4' INDUSTRIAL WRAP OR VAPOR TIGHT LED FIXTURE- SUSPENDED
- 2' x 4' LED FIXTURE - RECESSED
- 2' x 2' LED FIXTURE - RECESSED
- RECESSED LED DOWNLIGHT
- 10' - 0" CEILING HEIGHT ABOVE FINISH FLOOR
- HVAC AIR SUPPLY GRILLE
- HVAC LINEAR AIR SUPPLY GRILLE
- HVAC EXHAUST OR RETURN GRILLE
- EXIT SIGN

KEY PLAN:

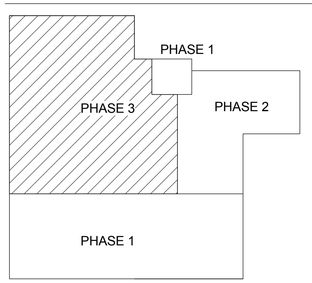

GRAPHIC SCALE:

1/8" =1'-0" 0' 4' 8' 16'

SYM	DESCRIPTION	DATE	APPR

NAVFAC

COMMONWEALTH OF VIRGINIA
JOHN B. ANDERSON III
Lic. No. 015146
3/18/2016
ARCHITECT

Wiley|Wilson | BURNS McDONNELL
JOINT VENTURE

A/E INFO

APPROVED
FOR COMMANDER NAVFAC / B.L.T.L.

ACTIVITY

SATISFACTORY TO DATE

DES	DRW	CHK
JBA	JBA	LTC

PROJECT MANAGER
IPT TECH. BRANCH HEAD
CHIEF ENG/ARCH

DEPARTMENT OF THE NAVY
NAVAL FACILITIES ENGINEERING COMMAND
WEBSTER FIELD, NAS PATUXENT RIVER
NAVAL FACILITIES ENGINEERING COMMAND ~ WASHINGTON
ST. INIGOES, MD
NAVAL AIR STATION PATUXENT RIVER
ST. INIGOES, MD

BUILDING 8008 REPAIRS, ALTERATIONS AND ADDITION

REFLECTED CEILING PLAN - PHASE 3

SCALE: AS NOTED
EPROJECT NO. 1183080
CONSTR. CONTR. NO. N40080-15-D-0452
NAVFAC DRAWING NO. 13078351
SHEET 67 OF 180
A-120C

DRAWFORM REVISION: 10 MAY 2014

FILE NAME: C:\Revit_Projects\86314_A_Central_jbanderson@burnsmcd.com.rvt
REVDATE: 3/18/2016 9:16:33 AM

NEW WORK KEY NOTES

1. NEW PREFINISHED INSULATED METAL PANELS, TYP
2. NEW PREFINISHED METAL ROOF COPING, TYP
3. PAINTED BOLLARDS, TYP
4. NEW COLUMN WITH PREFINISHED COLUMN WRAP
5. NEW ALUMINUM AND GLASS CANOPY
6. MODIFIED BITUMEN ROOFING SYSTEM
7. NEW ALUMINUM ARCHITECTURAL CANOPY SUPPORT COLUMNS
8. NOTE NOT USED THIS SHEET
9. BUILDING ADDRESS SIGN - REFERENCE SIGNAGE DRAWINGS
10. BUILDING LETTER ID SIGNAGE - REFERENCE SIGNAGE DRAWINGS
11. PREFINISHED 8" SQUARE METAL GUTTER, TYP
12. PREFINISHED 6" ROUND METAL DOWNSPOUT, TYP
13. ROOF ACCESS HATCH AND GUARD. SEE SHEET A-572.
14. EXTERIOR LIGHTING FIXTURE - SEE ELECTRICAL

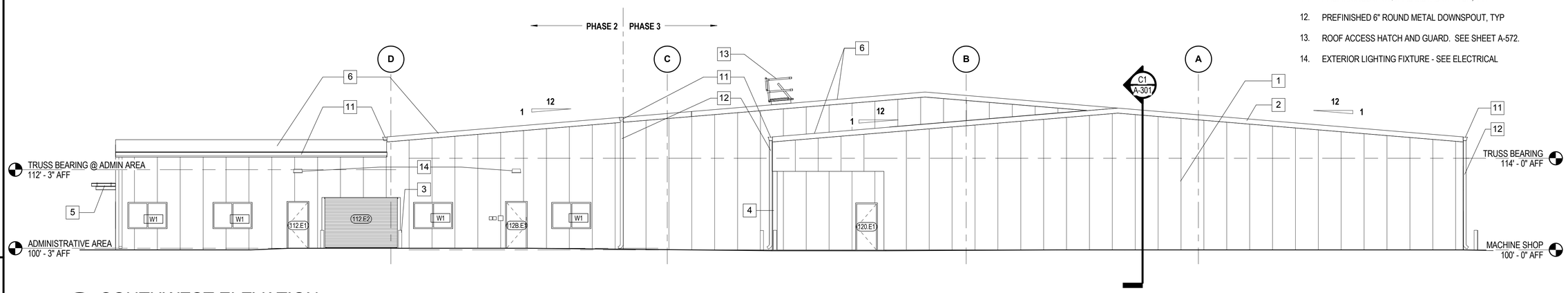

C1 SOUTHWEST ELEVATION
SCALE: 1/8" = 1'-0"

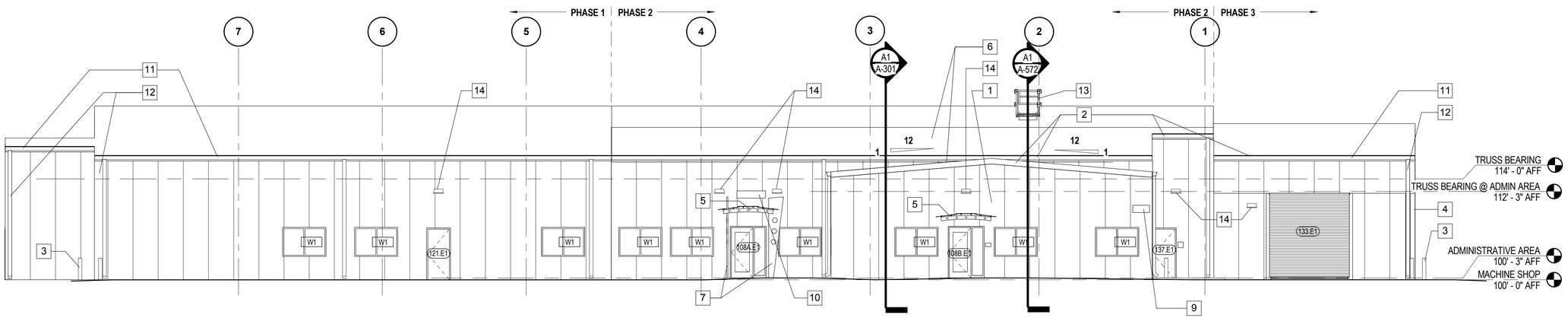

A1 NORTHWEST ELEVATION
SCALE: 1/8" = 1'-0"

GRAPHIC SCALE:

1/16" =1'-0" 0' 8' 16' 32'

SYM	DESCRIPTION	DATE	APPR

NAVFAC

COMMONWEALTH OF VIRGINIA
JOHN B. ANDERSON III
Lic. No. 015146
3/18/2016
ARCHITECT

Wiley|Wilson | BURNS McDONNELL
JOINT VENTURE

A/E INFO.

APPROVED
FOR COMMANDER NAVFAC / B.L.T.L.

ACTIVITY

SATISFACTORY TO DATE

DES JBA	DRW JBA	CHK LTC

PROJECT MANAGER
IPT TECH. BRANCH HEAD
CHIEF ENG/ARCH

DEPARTMENT OF THE NAVY
NAVAL FACILITIES ENGINEERING COMMAND
WEBSTER FIELD, NAS PATUXENT RIVER

NAVAL FACILITIES ENGINEERING COMMAND ~ WASHINGTON
ST. INIGOES, MD

NAVAL AIR STATION PATUXENT RIVER
ST. INIGOES, MD

BUILDING 8008 REPAIRS, ALTERATIONS AND ADDITION

EXTERIOR BUILDING ELEVATIONS

SCALE: AS NOTED
EPROJECT NO. 1183080
CONSTR. CONTR. NO. N40080-15-D-0452
NAVFAC DRAWING NO. 13078352
SHEET 68 OF 180

A-201

DRAWFORM REVISION: 10 MAY 2014

FILE NAME: C:\Revit_Projects\86314_A_Central_jbanderson@burnsmcd.com.rvt
REVDATE: 3/18/2016 9:16:41 AM

NEW WORK KEY NOTES

1. NEW PREFINISHED INSULATED METAL PANELS, TYP
2. NEW PREFINISHED METAL ROOF COPING, TYP
3. PAINTED BOLLARDS, TYP
4. NEW COLUMN WITH PREFINISHED COLUMN WRAP
5. NEW ALUMINUM AND GLASS CANOPY
6. MODIFIED BITUMEN ROOFING SYSTEM
7. NEW ALUMINUM ARCHITECTURAL CANOPY SUPPORT COLUMNS
8. NOT USED
9. NOT USED THIS SHEET
10. NOT USED THIS SHEET
11. PREFINISHED 8" SQUARE METAL GUTTER, TYP
12. PREFINISHED 6" ROUND METAL DOWNSPOUT, TYP
13. ROOF ACCESS HATCH AND GUARD. SEE SHEET A-572.
14. EXTERIOR LIGHTING FIXTURE - SEE ELECTRICAL

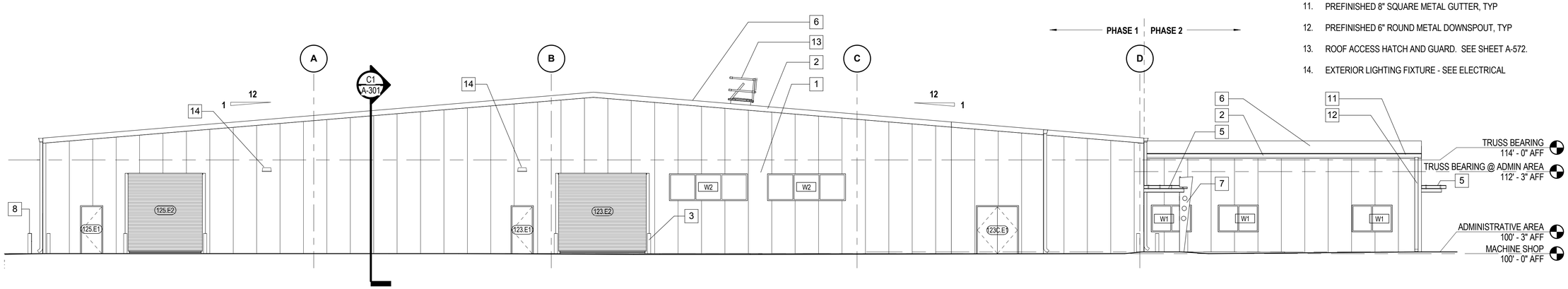

C1 NORTHEAST ELEVATION

SCALE: 1/8" = 1'-0"

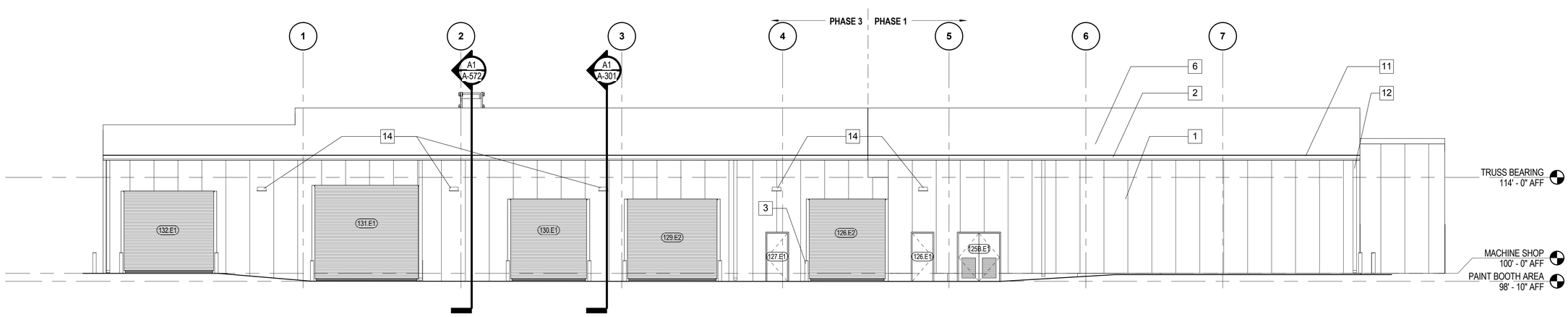

A1 SOUTHEAST ELEVATION

SCALE: 1/8" = 1'-0"

GRAPHIC SCALE:

1/16" =1'-0" 0' 8' 16' 32'

SYM	DESCRIPTION	DATE	APPR

NAVFAC

COMMONWEALTH OF VIRGINIA
JOHN B. ANDERSON III
Lic. No. 015146
3/18/2016
ARCHITECT

Wiley|Wilson | BURNS McDONNELL
JOINT VENTURE

A/E INFO

APPROVED

FOR COMMANDER NAVFAC / B.L.T.L.

ACTIVITY

SATISFACTORY TO DATE

DES JBA	DRW JBA	CHK LTC

PROJECT MANAGER
IPT TECH. BRANCH HEAD
CHIEF ENG/ARCH

DEPARTMENT OF THE NAVY
NAVAL FACILITIES ENGINEERING COMMAND
WEBSTER FIELD, NAS PATUXENT RIVER

NAVAL FACILITIES ENGINEERING COMMAND ~ WASHINGTON
ST. INIGOES, MD

NAVAL AIR STATION PATUXENT RIVER
ST. INIGOES, MD

BUILDING 8008 REPAIRS, ALTERATIONS AND ADDITION

EXTERIOR BUILDING ELEVATIONS

SCALE: AS NOTED
EPROJECT NO. 1183080
CONSTR. CONTR. NO. N40080-15-D-0452
NAVFAC DRAWING NO. 13078353
SHEET 69 OF 180

A-202

DRAWFORM REVISION: 10 MAY 2014

FILE NAME: C:\Revit_Projects\86314_A_Central_jbanderson@burnsmcd.com.rvt
REVDATE: 3/18/2016 9:16:48 AM

NEW WORK KEY NOTES

1. NEW PREFINISHED INSULATED METAL PANEL WALL SYSTEM OVER COLD-FORMED METAL FRAMING
2. MODIFIED BITUMEN ROOFING SYSTEM OVER RIGID INSULATION ON METAL ROOF DECK ON COLD FORMED STEEL TRUSSES
3. NEW CONCRETE FLOOR SLAB, SEE STRUCTURAL
4. NEW INTERIOR GWB PARTITION
5. OVERHEAD COILING DOOR
6. NEW CONCRETE PAD, SEE CIVIL
7. GWB CEILING
8. ACT CEILING

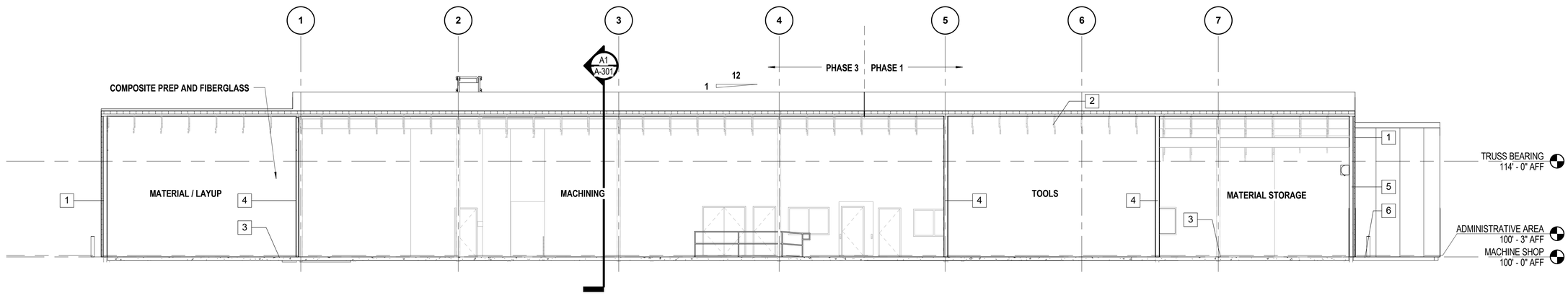

C1 BUILDING SECTION
SCALE: 1/8" = 1'-0"

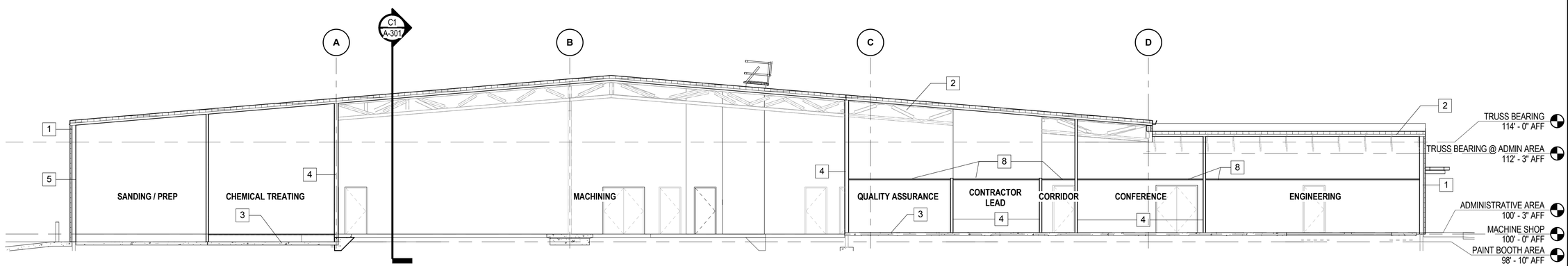

A1 BUILDING SECTION
SCALE: 1/8" = 1'-0"

GRAPHIC SCALE:
1/16" =1'-0"
0' 8' 16' 32'

SYM	DESCRIPTION	DATE	APPR

NAVFAC

COMMONWEALTH OF VIRGINIA
JOHN B. ANDERSON III
Lic. No. 015146
3/18/2016
ARCHITECT

Wiley|Wilson | BURNS McDONNELL
JOINT VENTURE

A/E INFO

APPROVED
FOR COMMANDER NAVFAC / B.L.T.L.
ACTIVITY
SATISFACTORY TO DATE
DES JBA | DRW JBA | CHK LTC
PROJECT MANAGER
IPT TECH. BRANCH HEAD
CHIEF ENG/ARCH

DEPARTMENT OF THE NAVY
NAVAL FACILITIES ENGINEERING COMMAND
WEBSTER FIELD, NAS PATUXENT RIVER
NAVAL FACILITIES ENGINEERING COMMAND ~ WASHINGTON
ST. INIGOES, MD
NAVAL AIR STATION PATUXENT RIVER
ST. INIGOES, MD
BUILDING 8008 REPAIRS, ALTERATIONS AND ADDITION
BUILDING SECTIONS

SCALE: AS NOTED
EPROJECT NO. 1183080
CONSTR. CONTR. NO. N40080-15-D-0452
NAVFAC DRAWING NO. 13078354
SHEET 70 OF 180
A-301

DRAWFORM REVISION: 10 MAY 2014

FILE NAME: C:\Revit_Projects\86314_A_Central_jbanderson@burnsmcd.com.rvt
REVDATE: 3/18/2016 9:16:57 AM

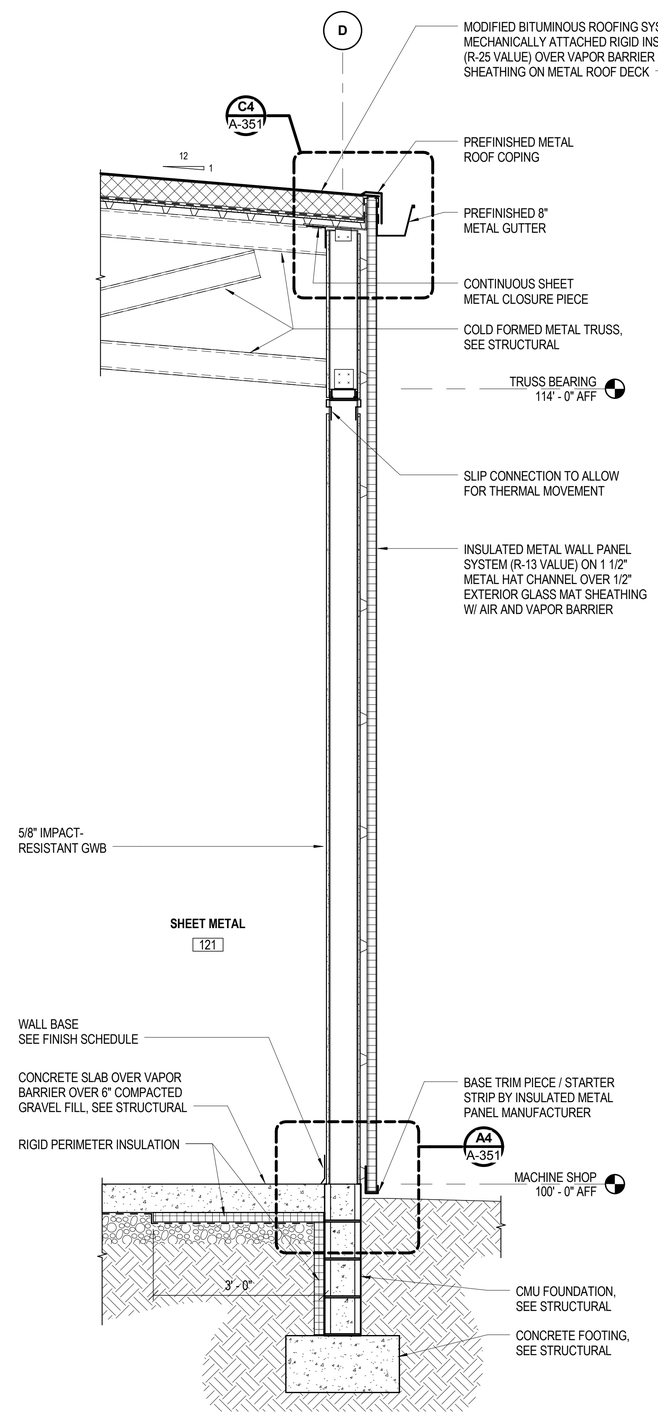

A1 WALL SECTION
SCALE: 3/4" = 1'-0"

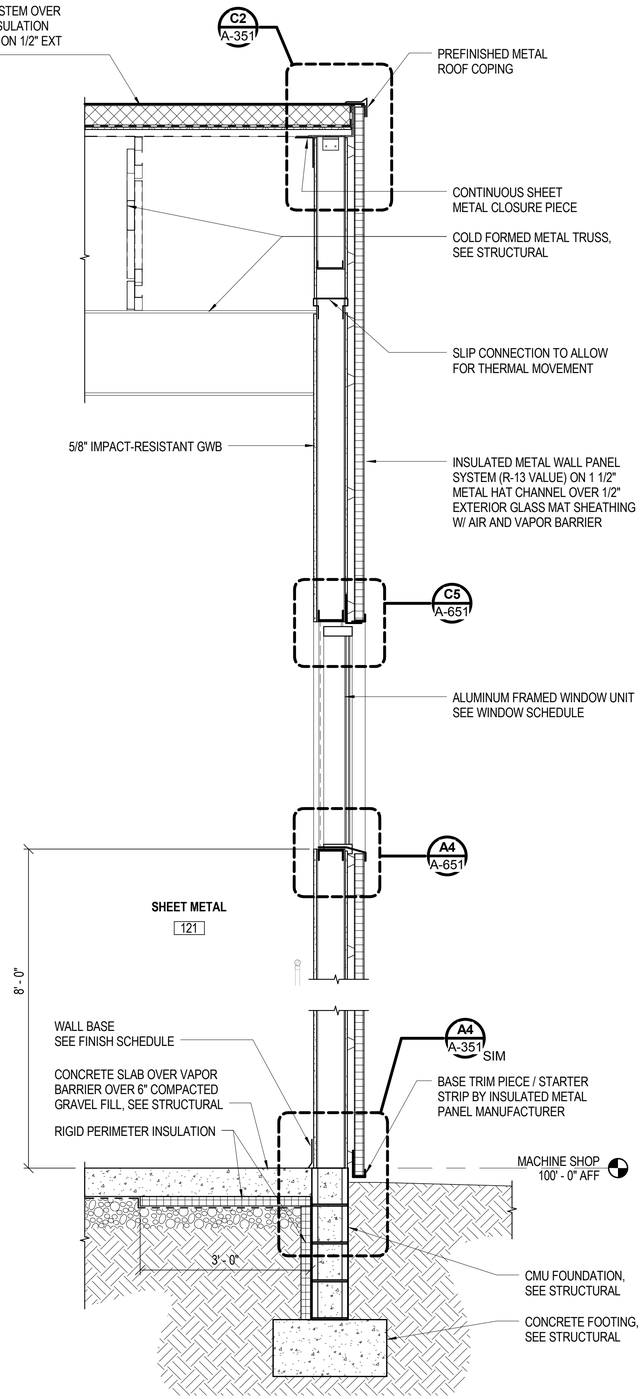

A2 WALL SECTION
SCALE: 3/4" = 1'-0"

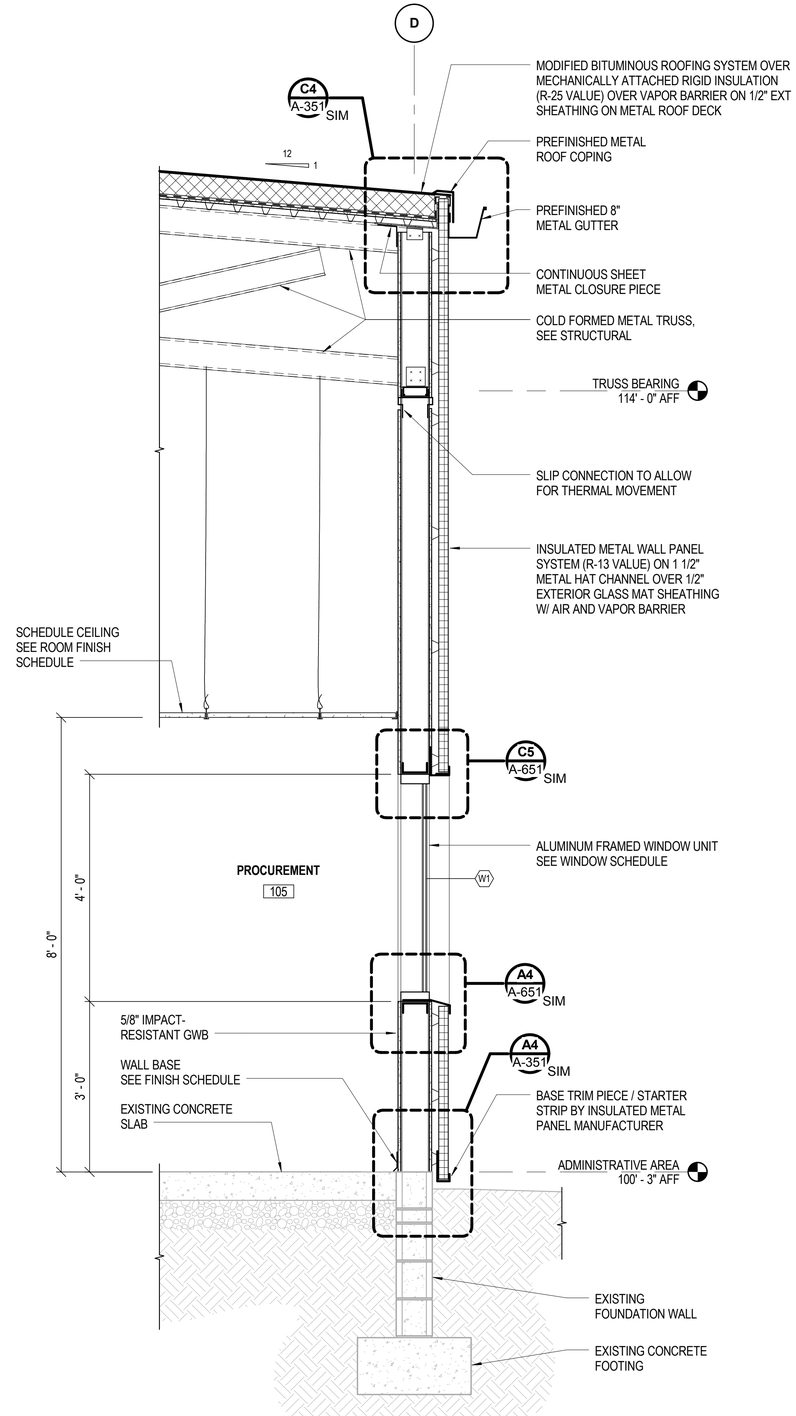

A4 WALL SECTION
SCALE: NOT TO SCALE

GRAPHIC SCALE:
3/4" =1'-0"
0' 1' 2' 3'

SYM	DESCRIPTION	DATE	APPR

NAVFAC

COMMONWEALTH OF VIRGINIA
JOHN B. ANDERSON III
Lic. No. 015146
3/18/2016
ARCHITECT

Wiley|Wilson | BURNS McDONNELL
JOINT VENTURE

A/E INFO

APPROVED
FOR COMMANDER NAVFAC / B.L.T.L.

ACTIVITY

SATISFACTORY TO DATE
DES JBA DRW JBA CHK LTC
PROJECT MANAGER
IPT TECH. BRANCH HEAD
CHIEF ENG/ARCH

DEPARTMENT OF THE NAVY
NAVAL FACILITIES ENGINEERING COMMAND
WEBSTER FIELD, NAS PATUXENT RIVER
NAVAL FACILITIES ENGINEERING COMMAND ~ WASHINGTON
ST. INIGOES, MD
NAVAL AIR STATION PATUXENT RIVER
ST. INIGOES, MD
BUILDING 8008 REPAIRS, ALTERATIONS AND ADDITION
WALL SECTIONS

SCALE: AS NOTED
EPROJECT NO. 1183080
CONSTR. CONTR. NO. N40080-15-D-0452
NAVFAC DRAWING NO. 13078355
SHEET 71 OF 180
A-311

DRAWFORM REVISION: 10 MAY 2014

FILE NAME: C:\Revit_Projects\86314_A_Central_jbanderson@burnsmcd.com.rvt
REV/DATE: 3/18/2016 9:17:05 AM

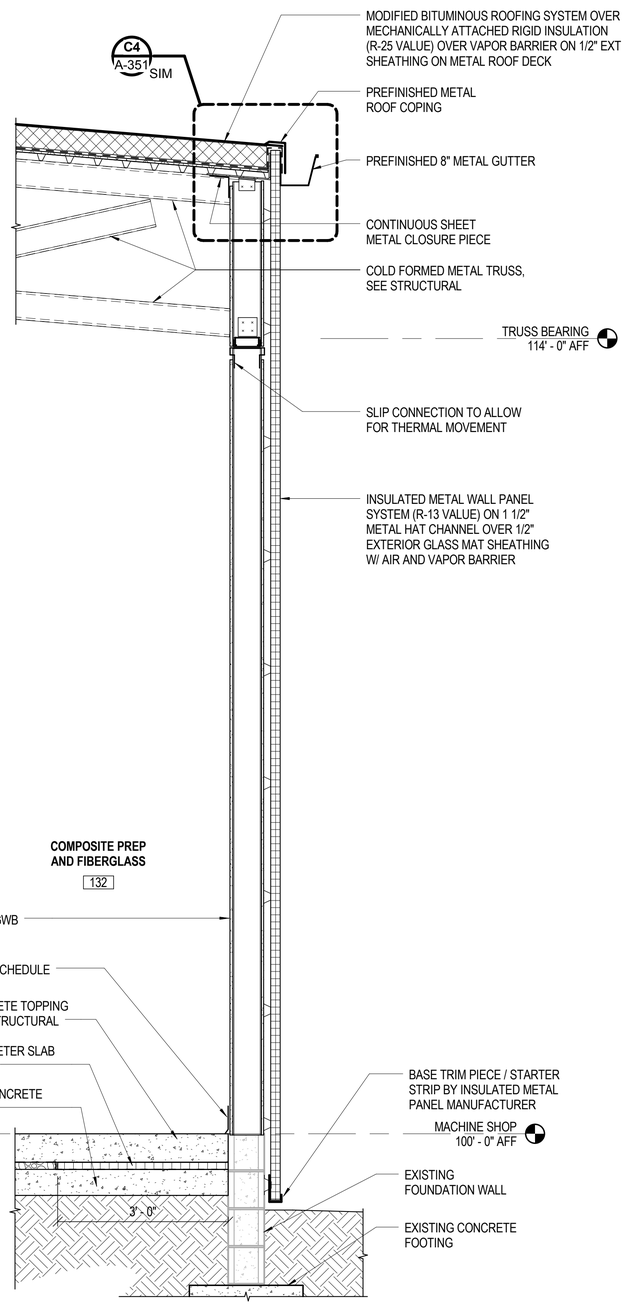

A1 WALL SECTION
SCALE: 3/4" = 1'-0"

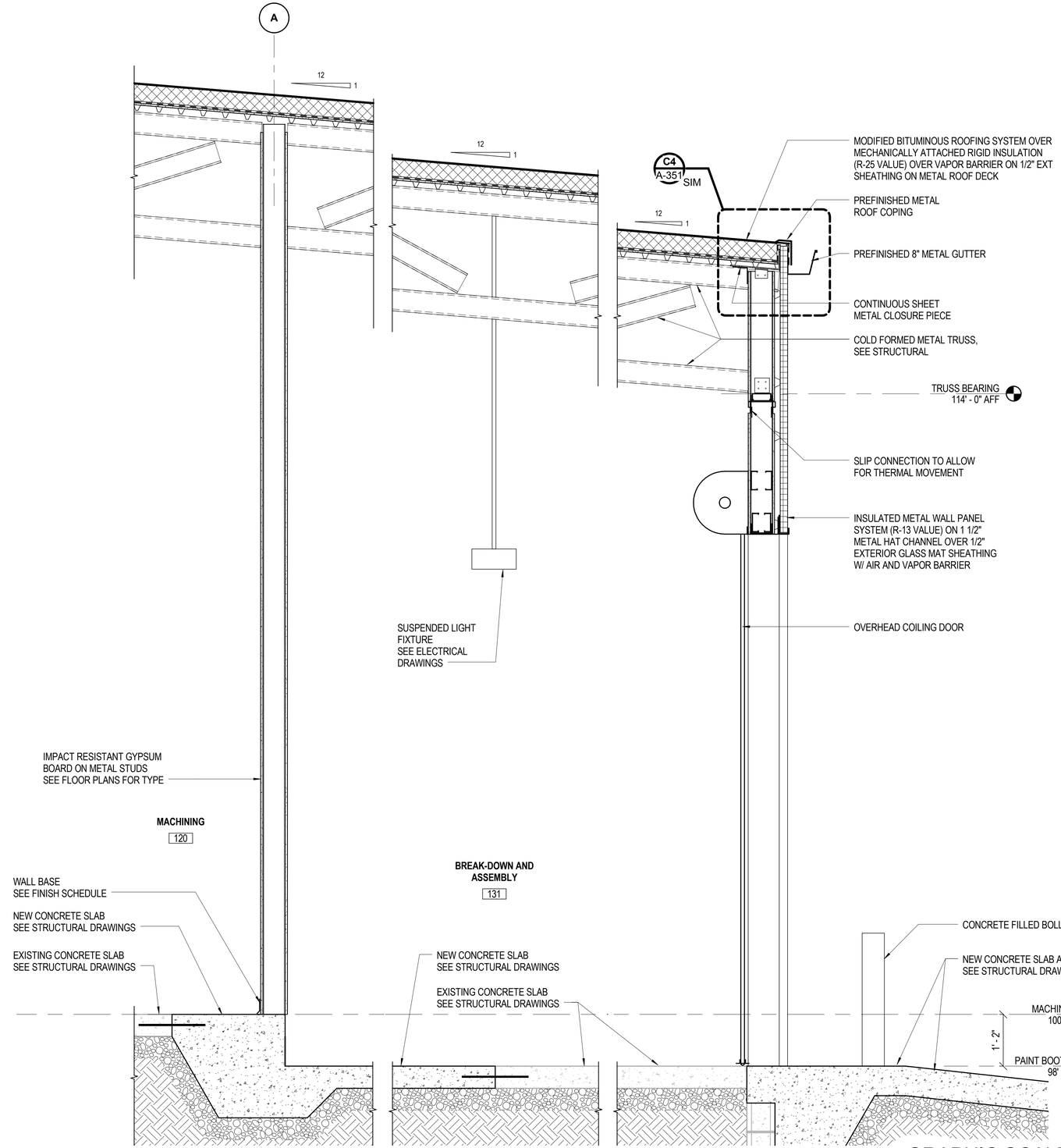

A2 WALL SECTION
SCALE: 3/4" = 1'-0"

GRAPHIC SCALE:
3/4" =1'-0"
0' 1' 2' 3'

SYM	DESCRIPTION	DATE	APPR

NAVFAC

COMMONWEALTH OF VIRGINIA
JOHN B. ANDERSON III
Lic. No. 015146
3/18/2016
ARCHITECT

Wiley|Wilson | BURNS McDONNELL
JOINT VENTURE

A/E INFO

APPROVED
FOR COMMANDER NAVFAC / B.L.T.L.

ACTIVITY

SATISFACTORY TO DATE

DES JBA	DRW HRN	CHK LTC

PROJECT MANAGER
IPT TECH. BRANCH HEAD
CHIEF ENG/ARCH

DEPARTMENT OF THE NAVY
NAVAL FACILITIES ENGINEERING COMMAND
WEBSTER FIELD, NAS PATUXENT RIVER

NAVAL FACILITIES ENGINEERING COMMAND ~ WASHINGTON
ST. INIGOES, MD

NAVAL AIR STATION PATUXENT RIVER
ST. INIGOES, MD

BUILDING 8008 REPAIRS, ALTERATIONS AND ADDITION

WALL SECTIONS

SCALE: AS NOTED
EPROJECT NO. 1183080
CONSTR. CONTR. NO. N40080-15-D-0452
NAVFAC DRAWING NO. 13078356
SHEET 72 OF 180
A-312

DRAWFORM REVISION: 10 MAY 2014

FILE NAME: C:\Revit_Projects\86314_A_Central_jbanderson@burnsmcd.com.rvt
REV/DATE: 3/18/2016 9:17:13 AM

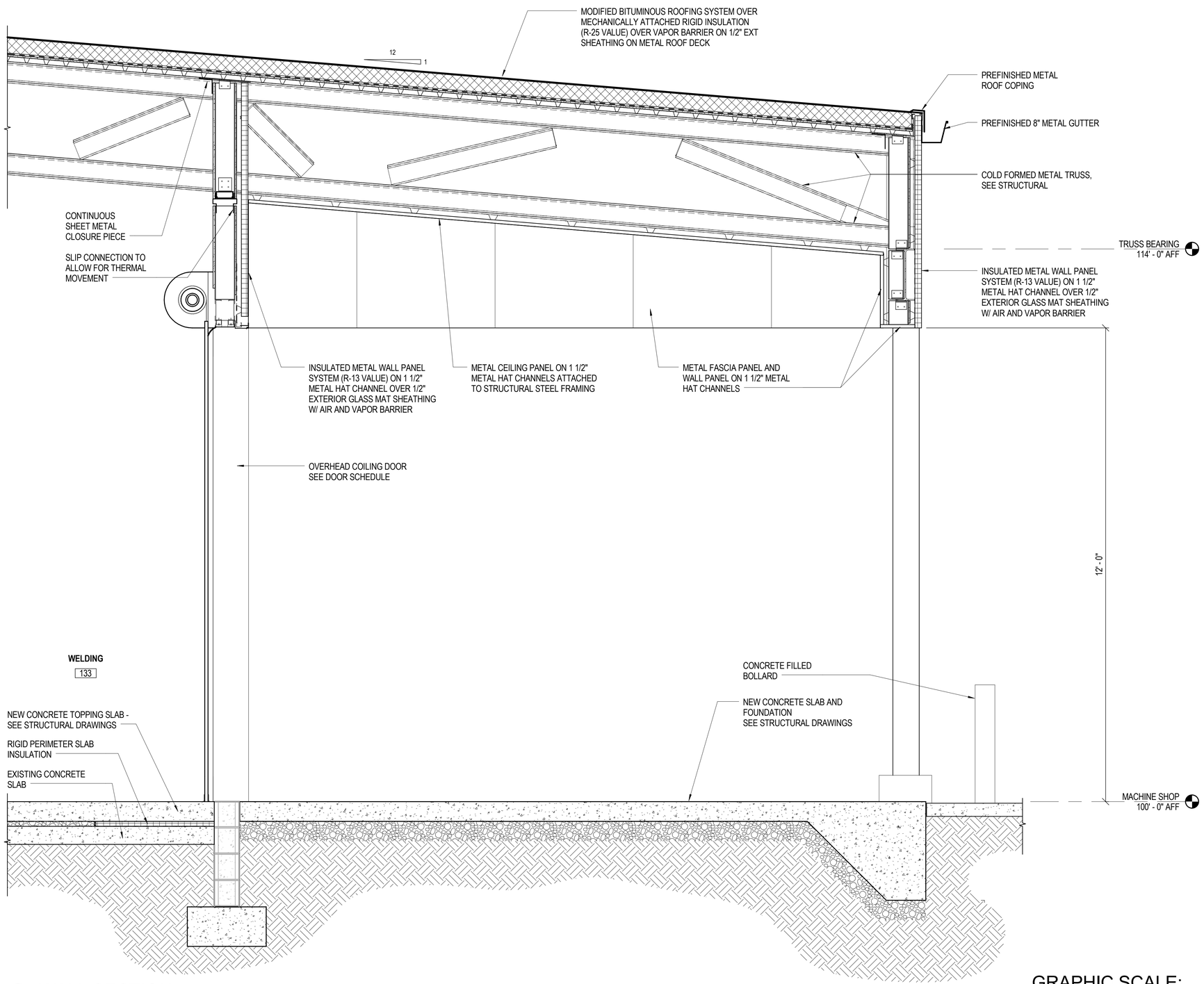

A2 WALL SECTION
SCALE: 3/4" = 1'-0"

GRAPHIC SCALE:
3/4" =1'-0" 0' 1' 2' 3'

SYM	DESCRIPTION	DATE	APPR

NAVFAC

COMMONWEALTH OF VIRGINIA
JOHN B. ANDERSON III
Lic. No. 015146
3/18/2016
ARCHITECT

Wiley|Wilson | BURNS McDONNELL
JOINT VENTURE

A/E INFO

APPROVED
FOR COMMANDER NAVFAC / B.L.T.L.
ACTIVITY
SATISFACTORY TO DATE
DES JBA | DRW HRN | CHK LTC
PROJECT MANAGER
IPT TECH. BRANCH HEAD
CHIEF ENG/ARCH

DEPARTMENT OF THE NAVY
NAVAL FACILITIES ENGINEERING COMMAND
WEBSTER FIELD, NAS PATUXENT RIVER
NAVAL FACILITIES ENGINEERING COMMAND ~ WASHINGTON
ST. INIGOES, MD
NAVAL AIR STATION PATUXENT RIVER
ST. INIGOES, MD
BUILDING 8008 REPAIRS, ALTERATIONS AND ADDITION
WALL SECTIONS

SCALE: AS NOTED
EPROJECT NO. 1183080
CONSTR. CONTR. NO. N40080-15-D-0452
NAVFAC DRAWING NO. 13078357
SHEET 73 OF 180
A-313

DRAWFORM REVISION: 10 MAY 2014

FILE NAME: C:\Revit_Projects\86314_A_Central_jbanderson@burnsmcd.com.rvt
REVDATE: 3/18/2016 9:17:20 AM

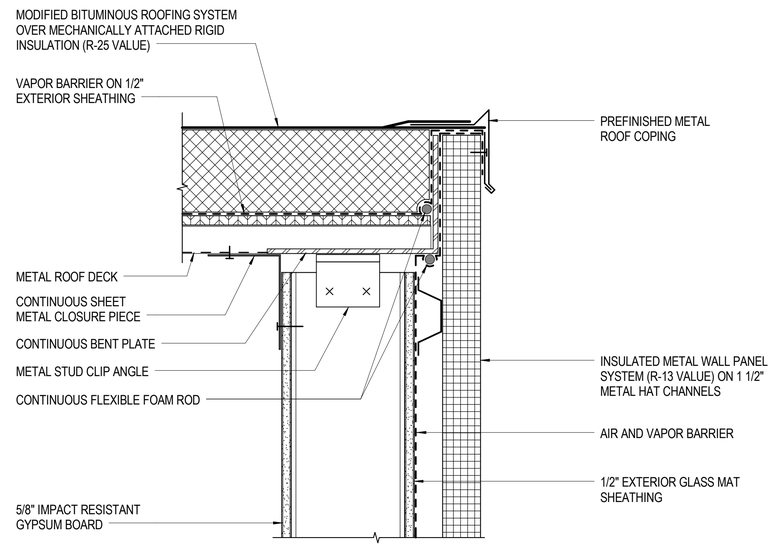

C2 SECTION DETAIL
SCALE: 3" = 1'-0"

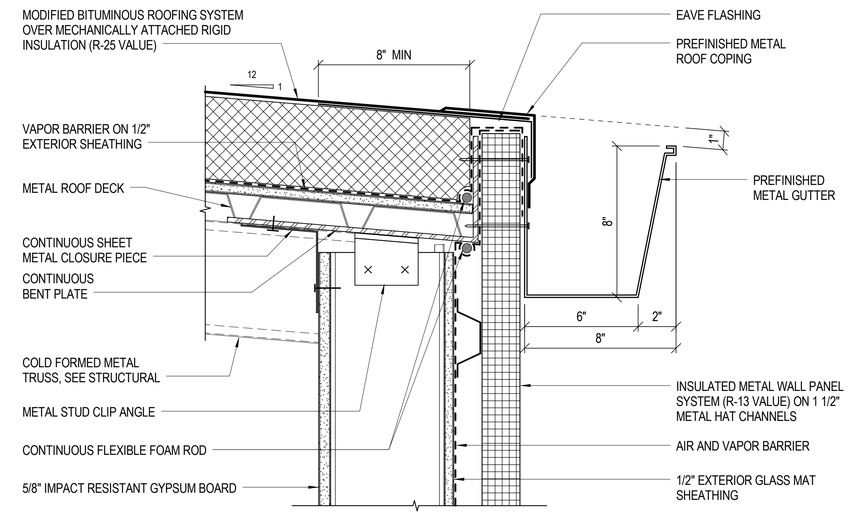

C4 SECTION DETAIL
SCALE: 3" = 1'-0"

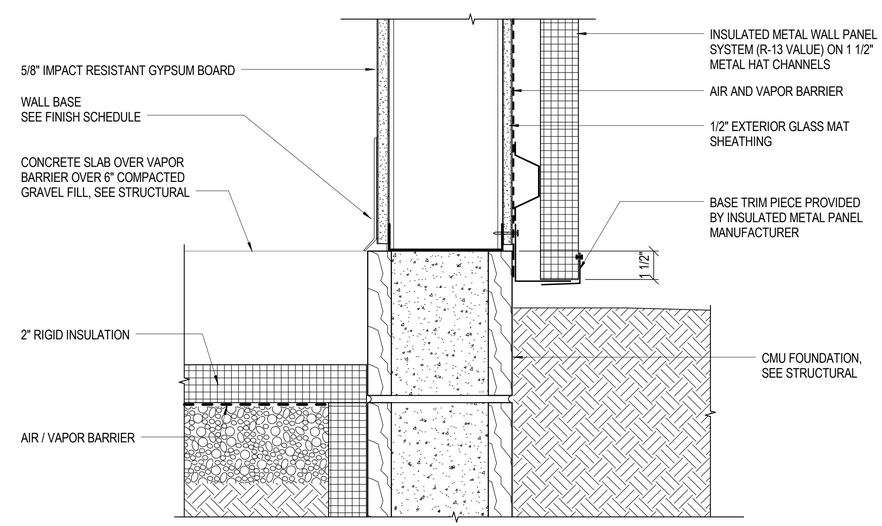

A4 SECTION DETAIL
SCALE: 3" = 1'-0"

GRAPHIC SCALE:
3" =1'-0" 0' 3" 6" 9"

SYM	DESCRIPTION	DATE	APPR

NAVFAC

COMMONWEALTH OF VIRGINIA
JOHN B. ANDERSON III
Lic. No. 015146
3/18/2016
ARCHITECT

Wiley|Wilson | BURNS McDONNELL
JOINT VENTURE

A/E INFO

APPROVED
FOR COMMANDER NAVFAC / B.L.T.L.
ACTIVITY
SATISFACTORY TO DATE
DES JBA | DRW HRN | CHK LTC
PROJECT MANAGER
IPT TECH. BRANCH HEAD
CHIEF ENG/ARCH

DEPARTMENT OF THE NAVY
NAVAL FACILITIES ENGINEERING COMMAND
WEBSTER FIELD, NAS PATUXENT RIVER
NAVAL FACILITIES ENGINEERING COMMAND ~ WASHINGTON
ST. INIGOES, MD
NAVAL AIR STATION PATUXENT RIVER
ST. INIGOES, MD
BUILDING 8008 REPAIRS, ALTERATIONS AND ADDITION
SECTION DETAILS

SCALE: AS NOTED
EPROJECT NO. 1183080
CONSTR. CONTR. NO. N40080-15-D-0452
NAVFAC DRAWING NO. 13078358
SHEET 74 OF 180
A-351

DRAWFORM REVISION: 10 MAY 2014

FILE NAME: C:\Revit_Projects\86314_A_Central_jbanderson@burnsmcd.com.rvt
REVDATE: 3/18/2016 9:17:27 AM

TOILET ACCESSORY SCHEDULE

TYPE	DESCRIPTION
FSS	FOLDING SHOWER SEAT
GB	PAIR OF GRAB BARS 36" LONG AND 30" LONG
HSD	HAND SANITIZER DISPENSER
MG	MIRROR
PTDWR	COMBINATION PAPER TOWEL DISPENSER / WASTE RECEPTACLE
RH	ROBE HOOK
SC / SCR	SHOWER CURTAIN AND SHOWER CURTAIN ROD
SD	SOAP DISPENSER
SGB	SHOWER GRAB BAR
SND	SANITARY NAPKIN DISPOSER
TTD	TOILET TISSUE DISPENSER

GENERAL NOTES:

1. REFER TO SHEET AG002 FOR REQUIRED ADA CLEARANCES AND MOUNTING HEIGHTS AT FIXTURES AND ACCESSORIES.
2. FOR ARCHITECTURAL GENERAL NOTES, MATERIAL LEGEND, AND ABBREVIATIONS REFER TO SHEET AG001.
3. REFERENCE LIFE SAFETY DRAWINGS FOR FIRE RATED AND SMOKE RATED WALL LOCATIONS. ALL FIRE RATED WALLS AND SMOKE PARTITIONS ARE CONTINUOUS ACROSS ALL DOOR OPENINGS.
4. THE CONTRACTOR SHALL VERIFY ALL DIMENSIONS, ELEVATIONS AND SITE CONDITIONS BEFORE BEGINNING WORK AND FABRICATION. THE CONTRACT OFFICER SHALL BE NOTIFIED IN WRITING IMMEDIATELY OFANY DISCREPANCIES OR INCONSISTENCIES. IN NO CASE SHALL DIMENSIONS BE SCALED OFF PLANS, SECTIONS, OR DETAILS FROM THESE DRAWINGS.
5. FOR FINISH SCHEDULE AND FINISH LEGEND SEE SHEET A-600.
6. CONTRACTOR TO COORDINATE FLOOR DRAIN LOCATIONS SO THAT THEY COINCIDE WITH 2 CORNER JOINTS ON TILE PATTERN.

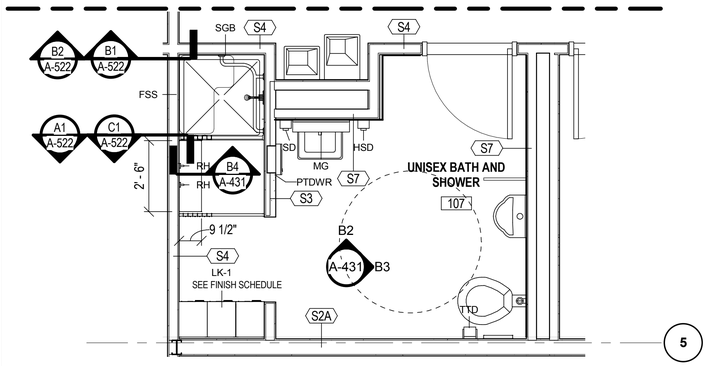

C1 UNISEX RM 107
SCALE: 3/8" = 1'-0"

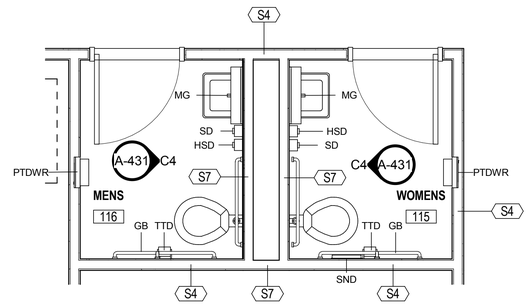

C3 WOMENS RM 115 & MENS RM 116
SCALE: 3/8" = 1'-0"

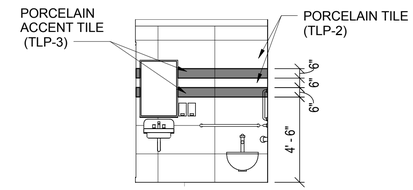

NOTE: TYPICAL WALL PATTERN ELEVATION FOR RESTROOM WALLS

C4 MENS RM 116 - ELEVATION
SCALE: 1/4" = 1'-0"

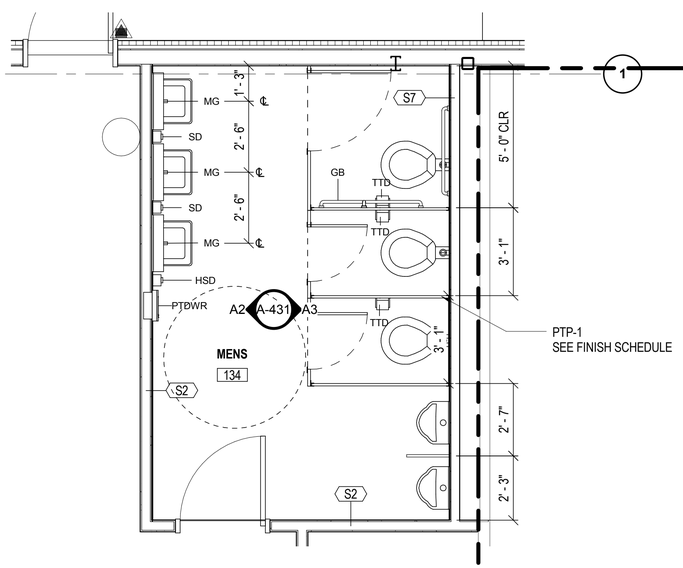

A1 MENS ROOM 134
SCALE: 3/8" = 1'-0"

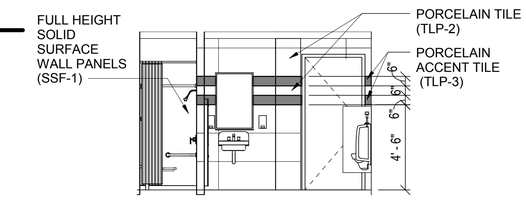

B2 UNISEX RM 107 - NORTH ELEVATION
SCALE: 1/4" = 1'-0"

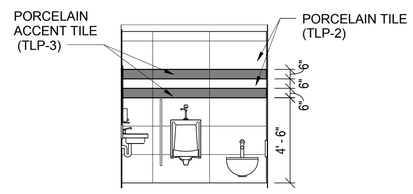

B3 UNISEX RM 107 - EAST ELEVATION
SCALE: 1/4" = 1'-0"

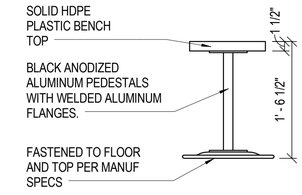

NOTE: SEE FINISH SCHEDULE

B4 BENCH (LB-1)
SCALE: NOT TO SCALE

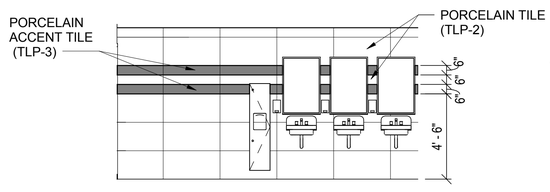

A2 MENS RM 134 - WEST ELEVATION
SCALE: 1/4" = 1'-0"

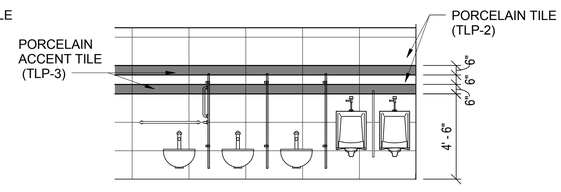

A3 MENS RM 134 - EAST ELEVATION
SCALE: 1/4" = 1'-0"

GRAPHIC SCALE:
1/4" =1'-0" 0' 2' 4' 8'

GRAPHIC SCALE:
3/8" =1'-0" 0' 2' 4' 6'

SYM	DESCRIPTION	DATE	APPR

NAVFAC

COMMONWEALTH OF VIRGINIA
JOHN B. ANDERSON III
Lic. No. 015146
3/18/2016
ARCHITECT

Wiley|Wilson | BURNS McDONNELL
JOINT VENTURE

A/E INFO.

APPROVED
FOR COMMANDER NAVFAC / B.L.T.L.
ACTIVITY
SATISFACTORY TO DATE
DES MO DRW MO CHK TLF
PROJECT MANAGER
IPT TECH. BRANCH HEAD
CHIEF ENG/ARCH

DEPARTMENT OF THE NAVY
NAVAL FACILITIES ENGINEERING COMMAND
WEBSTER FIELD, NAS PATUXENT RIVER
NAVAL FACILITIES ENGINEERING COMMAND ~ WASHINGTON
ST. INIGOES, MD
NAVAL AIR STATION PATUXENT RIVER
ST. INIGOES, MD
BUILDING 8008 REPAIRS, ALTERATIONS AND ADDITION
TOILET PLANS AND ELEVATIONS

SCALE: AS NOTED
EPROJECT NO. 1183080
CONSTR. CONTR. NO. N40080-15-D-0452
NAVFAC DRAWING NO. 13078359
SHEET 75 OF 180
A-431

DRAWFORM REVISION: 10 MAY 2014

FILE NAME: C:\Revit_Projects\86314_A_Central_jbanderson@burnsmcd.com.rvt
REVDATE: 3/18/2016 9:17:42 AM

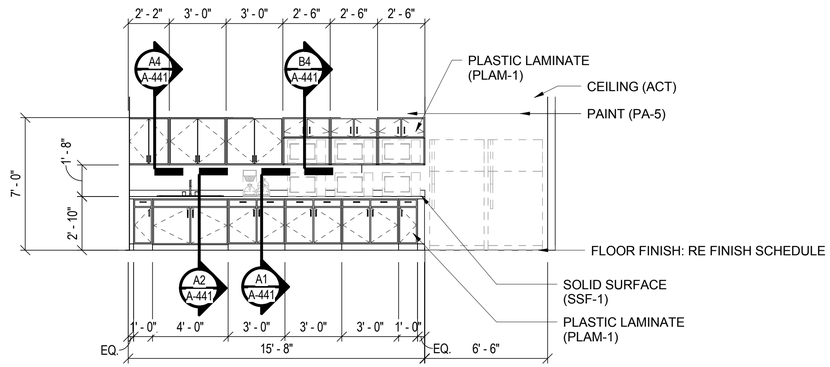

D1 BREAK ROOM ELEVATION
SCALE: 1/4" = 1'-0"

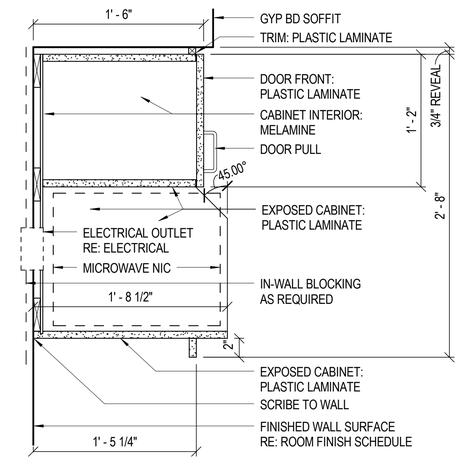

B4 CASEWORK SECTION UPPER CABINET
SCALE: 1 1/2" = 1'-0"

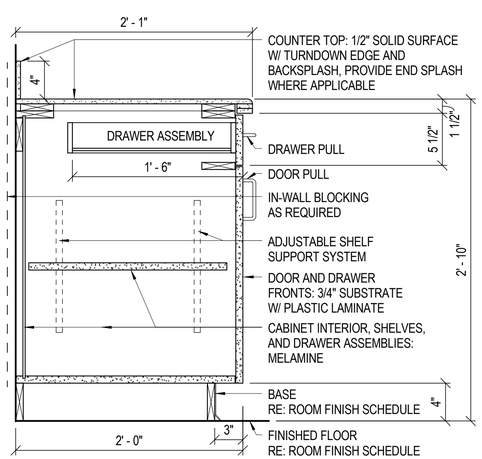

A1 CASEWORK SECTION BASE CABINET
SCALE: 1 1/2" = 1'-0"

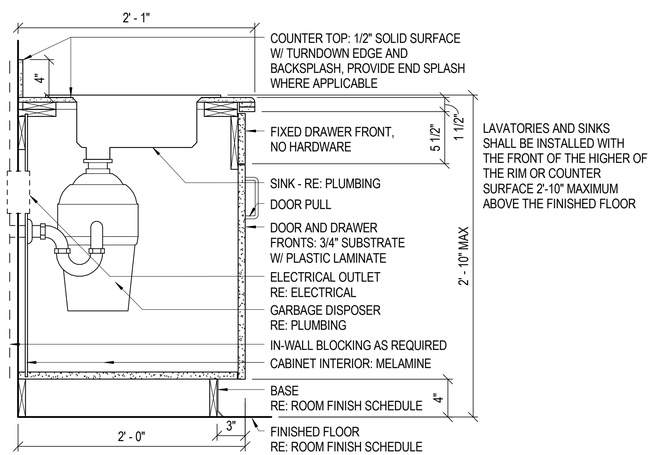

A2 CASEWORK SECTION BASE CABINET
SCALE: 1 1/2" = 1'-0"

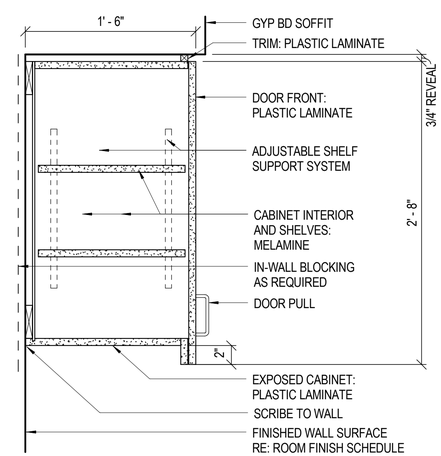

A4 CASEWORK SECTION UPPER CABINET
SCALE: 1 1/2" = 1'-0"

GRAPHIC SCALE:
1/4" =1'-0" 0' 2' 4' 8'

GRAPHIC SCALE:
1 1/2" =1'-0" 0' 4" 8" 1'-4"

APPR. | DATE | DESCRIPTION | SYM

NAVFAC

COMMONWEALTH OF VIRGINIA
JOHN B. ANDERSON III
Lic. No. 015146
3/18/2016
ARCHITECT

Wiley|Wilson | BURNS McDONNELL
JOINT VENTURE

A/E INFO.

APPROVED
FOR COMMANDER NAVFAC / B.L.T.L.
ACTIVITY
SATISFACTORY TO DATE
DES MO | DRW MO | CHK TLF
PROJECT MANAGER
IPT TECH. BRANCH HEAD
CHIEF ENG/ARCH

DEPARTMENT OF THE NAVY
NAVAL FACILITIES ENGINEERING COMMAND
WEBSTER FIELD, NAS PATUXENT RIVER
NAVAL FACILITIES ENGINEERING COMMAND ~ WASHINGTON
ST. INIGOES, MD
NAVAL AIR STATION PATUXENT RIVER
ST. INIGOES, MD
BUILDING 8008 REPAIRS, ALTERATIONS AND ADDITION
INTERIOR ELEVATIONS AND DETAILS

SCALE: AS NOTED
EPROJECT NO. 1183080
CONSTR. CONTR. NO. N40080-15-D-0452
NAVFAC DRAWING NO. 13078360
SHEET 76 OF 180
A-441

DRAWFORM REVISION: 10 MAY 2014

FILE NAME: C:\Revit_Projects\86314_A_Central_jbanderson@burnsmcd.com.rvt
REVDATE: 3/18/2016 9:17:48 AM

PARTITION TYPE S1

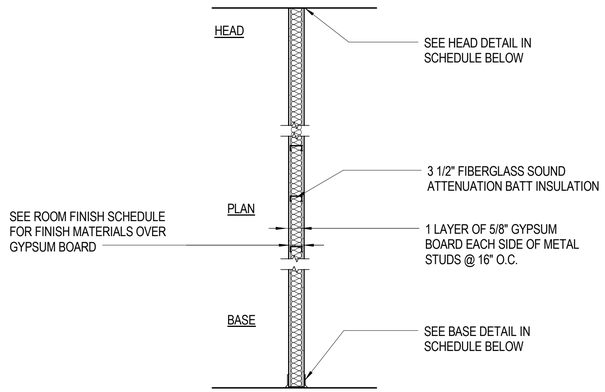

TYPE	STC	FIRE RATING	UL DESIGN NO	HEAD DETAIL	BASE DETAIL	TYPE COMMENTS
S1	-	-	-	C1/A-511	C2/A-512	3 5/8" METAL STUDS WITHOUT BLANKET INSULATION.
S1A	-	-	-	C1/A-511	C2/A-512	6" METAL STUDS WITHOUT BLANKET INSULATION.
S1B	-	-	-	C1/A-511	C2/A-512	3 5/8" METAL STUDS WITH BLANKET INSULATION.
S10	-	60 MIN	U423	C2/A-511	C2/A-512	6" METAL STUDS WITHOUT BLANKET INSULATION.
S11	-	60 MIN	U419	C2/A-511	C2/A-512 SIM	3 5/8" METAL STUDS WITHOUT BLANKET INSULATION.

PARTITION TYPE S2

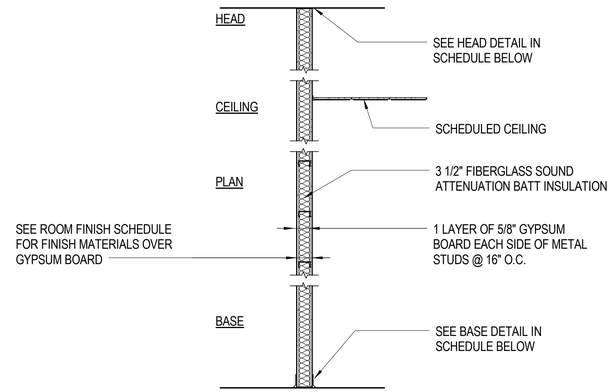

TYPE	STC	FIRE RATING	UL DESIGN NO	HEAD DETAIL	BASE DETAIL	TYPE COMMENTS
S2	-	-	-	C1/A-511	C2/A-512	3 5/8" METAL STUDS WITH ACOUSTIC BLANKET INSULATION.
S2A	-	-	-	C2/A-511	C2/A-512	6" METAL STUDS WITH ACOUSTIC BLANKET INSULATION.

PARTITION TYPE S3

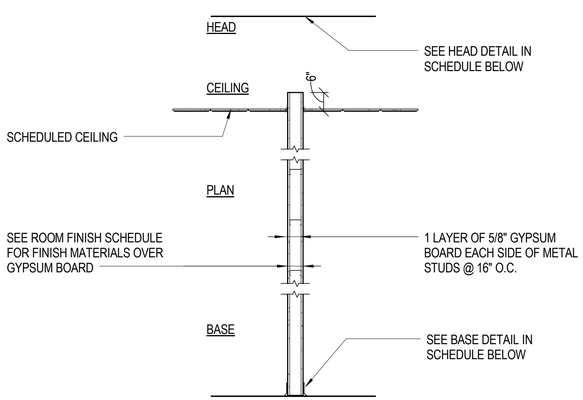

TYPE	STC	FIRE RATING	UL DESIGN NO	HEAD DETAIL	BASE DETAIL	TYPE COMMENTS
S3	-	-	-	B2/A-511	C2/A-512	3 5/8" METAL STUDS WITHOUT BLANKET INSULATION EXTENDING TO 6" ABOVE FINISHED CEILING.

PARTITION TYPE S4

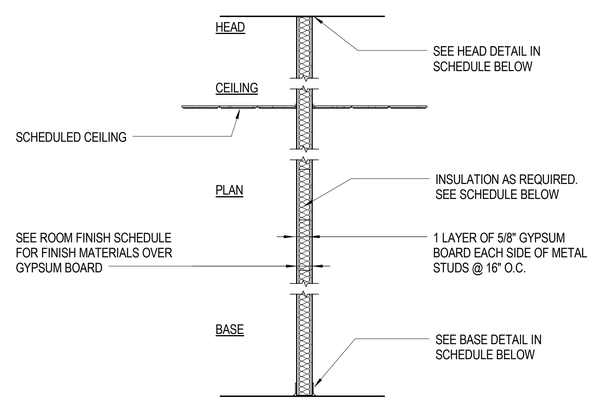

TYPE	STC	FIRE RATING	UL DESIGN NO	HEAD DETAIL	BASE DETAIL	TYPE COMMENTS
S4	-	-	-	C1/A-511	C2/A-512	3 5/8" METAL STUDS WITH ACOUSTIC BLANKET INSULATION.

PARTITION TYPES GENERAL NOTES:

1. WHERE STRUCTURAL MEMBERS PENETRATE FIRE-RATED GYPSUM BOARD WALLS, TAPE & SEAL WITH FIRE STOPPING SEALANT. WHERE STRUCTURAL MEMBERS PENETRATE FIRE-RATED CMU OR CONCRETE WALLS, SEAL WITH FIRE STOPPING SEALANT.
2. PROVIDE MINIMUM 20 GAUGE METAL BACKING AS REQUIRED FOR INSTALLATION OF EXTINGUISHER CABINETS, MESSAGE BOARDS, TOILET ACCESSORIES, TOILET PARTITIONS, WALL AND BASE CABINETS, ACCESS PANELS, ELECTRICAL AND FIRE PROTECTION SYSTEM PANELS, UNLESS NOTED OTHERWISE.
3. ALL METAL STUD AND FURRING DESIGNATIONS ARE THE STEEL STUD MANUFACTURER ASSOCIATIONS (SSMA) UNIVERSAL DESIGNATOR SYSTEM FOR LIGHT GAUGE STEEL FRAMING MEMBERS. ALL METAL STUDS AND BRACING SHALL BE 20 GAUGE UNLESS NOTED OTHERWISE.
4. REFERENCE DRAWINGS A-101A THRU A-101C FOR PARTITION TYPE LOCATIONS.
5. PROVIDE METAL STUD DIAGONAL BRACING @ 4'-0" O.C. (ALTERNATE DIRECTIONS) TO UNDERSIDE OF METAL DECK FOR ALL WALLS GREATER THAT EXTEND TO UNDERSIDE OF ROOF DECK, AND TO ALL LOAD-BEARING WALLS.
6. SEE DRAWING A-521 FOR TYPICAL PENETRATION DETAILS THROUGH FIRE-RATED PARTITIONS.
7. PROVIDE CEMENTITIOUS BACKER UNITS (AT SHOWER WALLS) OR WATER RESISTANT GYPSUM BOARD (AT ALL OTHER TOILET OR RESTROOM WALLS) ON WET SIDE WALL.

PARTITION TYPE SYMBOL LEGEND:

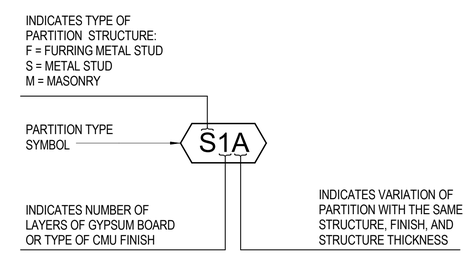

SYM	DESCRIPTION	DATE	APPR

NAVFAC

COMMONWEALTH OF VIRGINIA
JOHN B. ANDERSON III
Lic. No. 015146
3/18/2016
ARCHITECT

Wiley|Wilson | BURNS McDONNELL
JOINT VENTURE

A/E INFO

APPROVED
FOR COMMANDER NAVFAC / B.L.T.L.
ACTIVITY
SATISFACTORY TO DATE
DES JBA | DRW JBA | CHK LTC
PROJECT MANAGER
IPT TECH. BRANCH HEAD
CHIEF ENG/ARCH

DEPARTMENT OF THE NAVY
NAVAL FACILITIES ENGINEERING COMMAND
WEBSTER FIELD, NAS PATUXENT RIVER
NAVAL FACILITIES ENGINEERING COMMAND ~ WASHINGTON
ST. INIGOES, MD
NAVAL AIR STATION PATUXENT RIVER
ST. INIGOES, MD
BUILDING 8008 REPAIRS, ALTERATIONS AND ADDITION
PARTITION TYPES

SCALE: AS NOTED
EPROJECT NO. 1183080
CONSTR. CONTR. NO. N40080-15-D-0452
NAVFAC DRAWING NO. 13078361
SHEET 77 OF 180
A-501

DRAWFORM REVISION: 10 MAY 2014

FILE NAME: C:\Revit_Projects\86314_A_Central_jbanderson@burnsmcd.com.rvt
REVDATE: 3/18/2016 9:17:55 AM

PARTITION TYPE S5

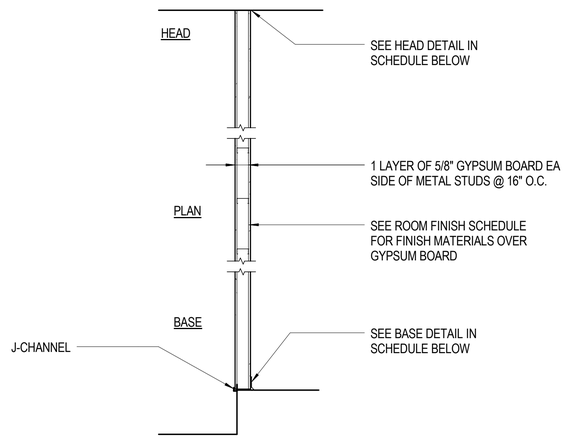

TYPE	STC	FIRE RATING	UL DESIGN NO	HEAD DETAIL	BASE DETAIL	TYPE COMMENTS
S5	-	-	-	C1/A-511	C2/A-512 SIM	6" METAL STUDS WITH BLANKET INSULATION.

PARTITION TYPE S6

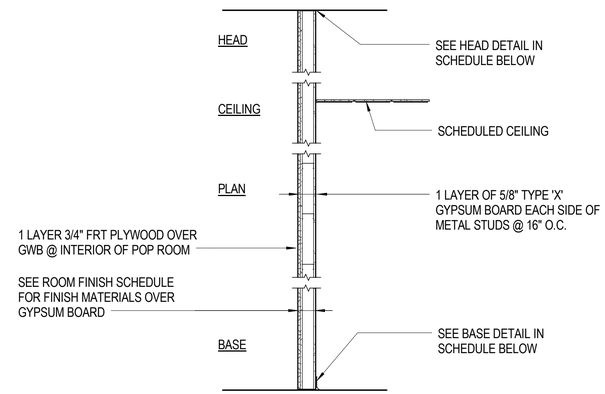

TYPE	STC	FIRE RATING	UL DESIGN NO	HEAD DETAIL	BASE DETAIL	TYPE COMMENTS
S6	-	60 MIN	U419	A3/A-511	B2/A-512	3 5/8" METAL STUDS WITHOUT BLANKET INSULATION.

PARTITION TYPE S7

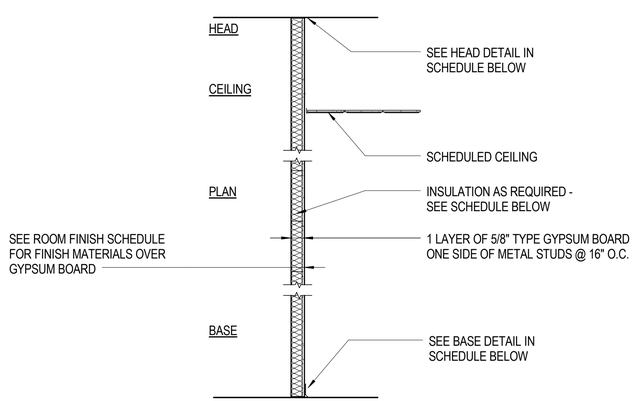

TYPE	STC	FIRE RATING	UL DESIGN NO	HEAD DETAIL	BASE DETAIL	TYPE COMMENTS
S7	-	-	-	C1/A-511	C1/A-512	3 5/8" METAL STUDS WITH BLANKET INSULATION.

PARTITION TYPE S8

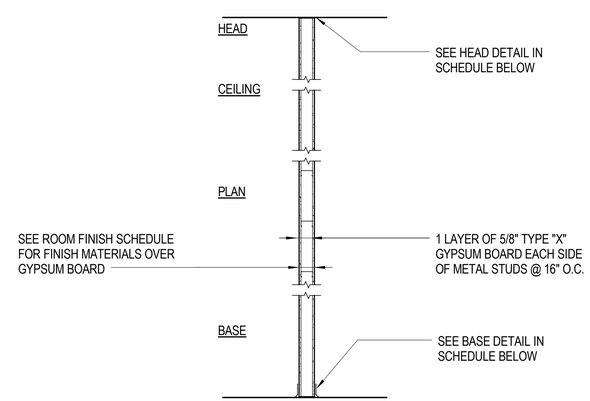

TYPE	STC	FIRE RATING	UL DESIGN NO	HEAD DETAIL	BASE DETAIL	TYPE COMMENTS
S8	-	60 MIN	U419	C2/A-511	C2/A-512	3 5/8" METAL STUDS WITHOUT BLANKET INSULATION.

PARTITION TYPES GENERAL NOTES:

1. WHERE STRUCTURAL MEMBERS PENETRATE FIRE-RATED GYPSUM BOARD WALLS, TAPE & SEAL WITH FIRE STOPPING SEALANT. WHERE STRUCTURAL MEMBERS PENETRATE FIRE-RATED CMU OR CONCRETE WALLS, SEAL WITH FIRE STOPPING SEALANT.
2. PROVIDE MINIMUM 20 GAUGE METAL BACKING AS REQUIRED FOR INSTALLATION OF EXTINGUISHER CABINETS, MESSAGE BOARDS, TOILET ACCESSORIES, TOILET PARTITIONS, WALL AND BASE CABINETS, ACCESS PANELS, ELECTRICAL AND FIRE PROTECTION SYSTEM PANELS, UNLESS NOTED OTHERWISE.
3. ALL METAL STUD AND FURRING DESIGNATIONS ARE THE STEEL STUD MANUFACTURER ASSOCIATIONS (SSMA) UNIVERSAL DESIGNATOR SYSTEM FOR LIGHT GAUGE STEEL FRAMING MEMBERS. ALL METAL STUDS AND BRACING SHALL BE 20 GAUGE UNLESS NOTED OTHERWISE.
4. REFERENCE DRAWINGS A-101A THRU A-101C FOR PARTITION TYPE LOCATIONS.
5. PROVIDE METAL STUD DIAGONAL BRACING @ 4'-0" O.C. (ALTERNATE DIRECTIONS) TO UNDERSIDE OF METAL DECK FOR ALL WALLS GREATER THAT EXTEND TO UNDERSIDE OF ROOF DECK, AND TO ALL LOAD-BEARING WALLS.
6. SEE DRAWING A-521 FOR TYPICAL PENETRATION DETAILS THROUGH FIRE-RATED PARTITIONS.
7. PROVIDE CEMENTITIOUS BACKER UNITS (AT SHOWER WALLS) OR WATER RESISTANT GYPSUM BOARD (AT ALL OTHER TOILET OR RESTROOM WALLS) ON WET SIDE WALL.

PARTITION TYPE SYMBOL LEGEND:

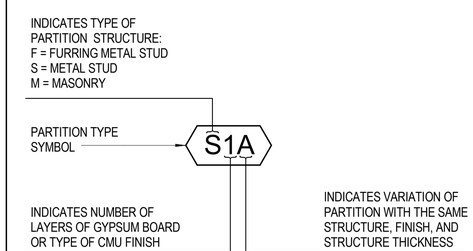

SYM	DESCRIPTION	DATE	APPR

NAVFAC

COMMONWEALTH OF VIRGINIA
JOHN B. ANDERSON III
Lic. No. 015146
3/18/2016
ARCHITECT

Wiley|Wilson | BURNS McDONNELL
JOINT VENTURE

A/E INFO

APPROVED
FOR COMMANDER NAVFAC / B.L.T.L.
ACTIVITY
SATISFACTORY TO DATE
DES JBA | DRW JBA | CHK | LTC
PROJECT MANAGER
IPT TECH. BRANCH HEAD
CHIEF ENG/ARCH

DEPARTMENT OF THE NAVY
NAVAL FACILITIES ENGINEERING COMMAND
WEBSTER FIELD, NAS PATUXENT RIVER
NAVAL FACILITIES ENGINEERING COMMAND ~ WASHINGTON
ST. INIGOES, MD
NAVAL AIR STATION PATUXENT RIVER
ST. INIGOES, MD
BUILDING 8008 REPAIRS, ALTERATIONS AND ADDITION
PARTITION TYPES

SCALE: AS NOTED
EPROJECT NO. 1183080
CONSTR. CONTR. NO. N40080-15-D-0452
NAVFAC DRAWING NO. 13078362
SHEET 78 OF 180
A-502

DRAWFORM REVISION: 10 MAY 2014

FILE NAME: C:\Revit_Projects\86314_A_Central_jbanderson@burnsmcd.com.rvt
REVDATE: 3/18/2016 9:18:02 AM

PARTITION TYPE S9

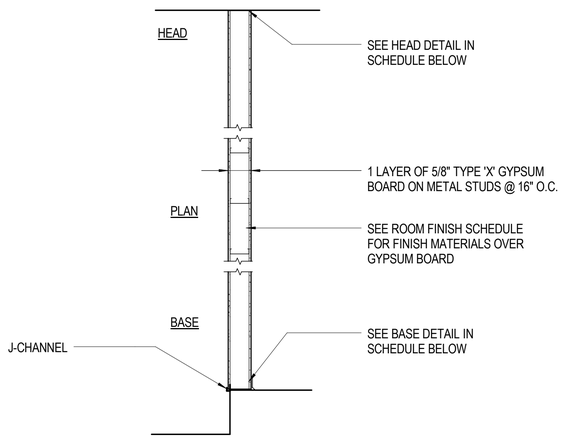

TYPE	STC	FIRE RATING	UL DESIGN NO	HEAD DETAIL	BASE DETAIL	TYPE COMMENTS
S9	-	60 MIN	U423	C2/A-511	C2/A-512 SIM	6" METAL STUDS WITHOUT BLANKET INSULATION.

PARTITION TYPE S10

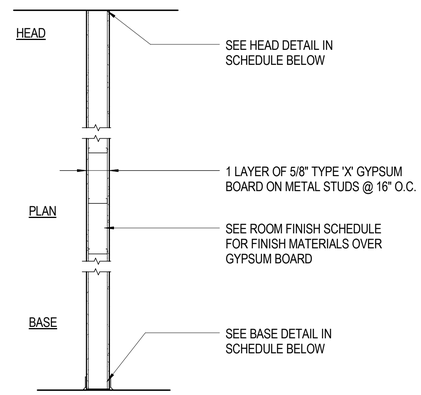

TYPE	STC	FIRE RATING	UL DESIGN NO	HEAD DETAIL	BASE DETAIL	TYPE COMMENTS
S10	-	60 MIN	U423	C2/A-511	C2/A-512	6" METAL STUDS WITHOUT BLANKET INSULATION.

PARTITION TYPE S11

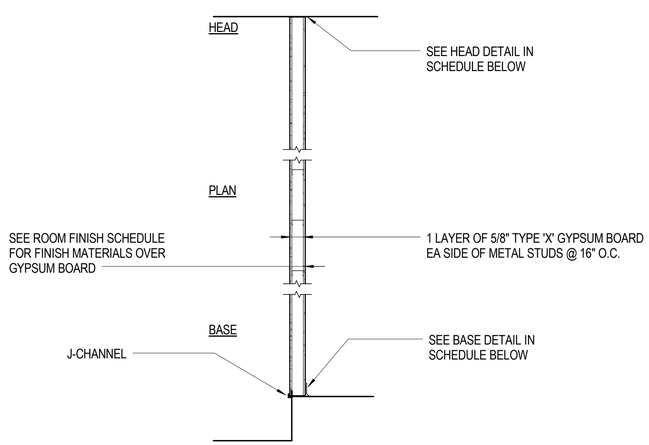

TYPE	STC	FIRE RATING	UL DESIGN NO	HEAD DETAIL	BASE DETAIL	TYPE COMMENTS
S11	-	60 MIN	U419	C2/A-511	C2/A-512 SIM	3 5/8" METAL STUDS WITHOUT BLANKET INSULATION.

PARTITION TYPES GENERAL NOTES:

1. WHERE STRUCTURAL MEMBERS PENETRATE FIRE-RATED GYPSUM BOARD WALLS, TAPE & SEAL WITH FIRE STOPPING SEALANT. WHERE STRUCTURAL MEMBERS PENETRATE FIRE-RATED CMU OR CONCRETE WALLS, SEAL WITH FIRE STOPPING SEALANT.
2. PROVIDE MINIMUM 20 GAUGE METAL BACKING AS REQUIRED FOR INSTALLATION OF EXTINGUISHER CABINETS, MESSAGE BOARDS, TOILET ACCESSORIES, TOILET PARTITIONS, WALL AND BASE CABINETS, ACCESS PANELS, ELECTRICAL AND FIRE PROTECTION SYSTEM PANELS, UNLESS NOTED OTHERWISE.
3. ALL METAL STUD AND FURRING DESIGNATIONS ARE THE STEEL STUD MANUFACTURER ASSOCIATIONS (SSMA) UNIVERSAL DESIGNATOR SYSTEM FOR LIGHT GAUGE STEEL FRAMING MEMBERS. ALL METAL STUDS AND BRACING SHALL BE 20 GAUGE UNLESS NOTED OTHERWISE.
4. REFERENCE DRAWINGS A-101A THRU A-101C FOR PARTITION TYPE LOCATIONS.
5. PROVIDE METAL STUD DIAGONAL BRACING @ 4'-0" O.C. (ALTERNATE DIRECTIONS) TO UNDERSIDE OF METAL DECK FOR ALL WALLS GREATER THAT EXTEND TO UNDERSIDE OF ROOF DECK, AND TO ALL LOAD-BEARING WALLS.
6. SEE DRAWING A-521 FOR TYPICAL PENETRATION DETAILS THROUGH FIRE-RATED PARTITIONS.
7. PROVIDE CEMENTITIOUS BACKER UNITS (AT SHOWER WALLS) OR WATER RESISTANT GYPSUM BOARD (AT ALL OTHER TOILET OR RESTROOM WALLS) ON WET SIDE WALL.

PARTITION TYPE SYMBOL LEGEND:

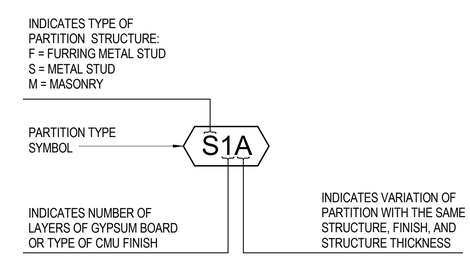

SYM	DESCRIPTION	DATE	APPR

NAVFAC

COMMONWEALTH OF VIRGINIA
JOHN B. ANDERSON III
Lic. No. 015146
3/18/2016
ARCHITECT

Wiley|Wilson | BURNS McDONNELL
JOINT VENTURE

A/E INFO

APPROVED
FOR COMMANDER NAVFAC / B.L.T.L.

ACTIVITY

SATISFACTORY TO DATE

DES JBA	DRW JBA	CHK LTC

PROJECT MANAGER
IPT TECH. BRANCH HEAD
CHIEF ENG/ARCH

DEPARTMENT OF THE NAVY
NAVAL FACILITIES ENGINEERING COMMAND
WEBSTER FIELD, NAS PATUXENT RIVER
NAVAL FACILITIES ENGINEERING COMMAND ~ WASHINGTON
ST. INIGOES, MD
NAVAL AIR STATION PATUXENT RIVER
ST. INIGOES, MD
BUILDING 8008 REPAIRS, ALTERATIONS AND ADDITION
PARTITION TYPES

SCALE: AS NOTED
EPROJECT NO. 1183080
CONSTR. CONTR. NO. N40080-15-D-0452
NAVFAC DRAWING NO. 13078363
SHEET 79 OF 180
A-503

DRAWFORM REVISION: 10 MAY 2014

FILE NAME: C:\Revit_Projects\86314_A_Central_jbanderson@burnsmcd.com.rvt
REVDATE: 3/18/2016 9:18:08 AM

PARTITION TYPE F1

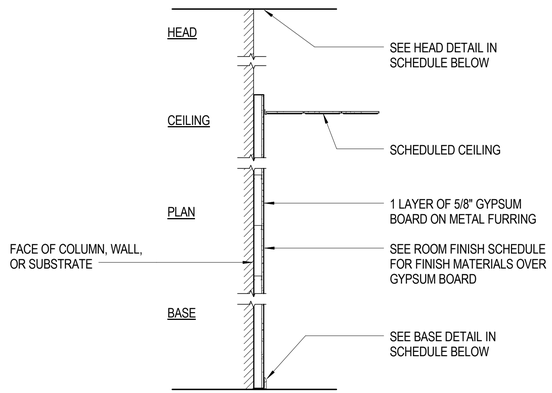

TYPE	STC	FIRE RATING	UL DESIGN NO	HEAD DETAIL	BASE DETAIL	TYPE COMMENTS
F1	-	-	-	A1/A-511	C1/A-512	2 1/2" FURRING STUDS AT 16" O.C. VERTICALLY

PARTITION TYPES GENERAL NOTES:

1. WHERE STRUCTURAL MEMBERS PENETRATE FIRE-RATED GYPSUM BOARD WALLS, TAPE & SEAL WITH FIRE STOPPING SEALANT. WHERE STRUCTURAL MEMBERS PENETRATE FIRE-RATED CMU OR CONCRETE WALLS, SEAL WITH FIRE STOPPING SEALANT.
2. PROVIDE MINIMUM 20 GAUGE METAL BACKING AS REQUIRED FOR INSTALLATION OF EXTINGUISHER CABINETS, MESSAGE BOARDS, TOILET ACCESSORIES, TOILET PARTITIONS, WALL AND BASE CABINETS, ACCESS PANELS, ELECTRICAL AND FIRE PROTECTION SYSTEM PANELS, UNLESS NOTED OTHERWISE.
3. ALL METAL STUD AND FURRING DESIGNATIONS ARE THE STEEL STUD MANUFACTURER ASSOCIATIONS (SSMA) UNIVERSAL DESIGNATOR SYSTEM FOR LIGHT GAUGE STEEL FRAMING MEMBERS. ALL METAL STUDS AND BRACING SHALL BE 20 GAUGE UNLESS NOTED OTHERWISE.
4. REFERENCE DRAWINGS A-101A THRU A-101C FOR PARTITION TYPE LOCATIONS.
5. PROVIDE METAL STUD DIAGONAL BRACING @ 4'-0" O.C. (ALTERNATE DIRECTIONS) TO UNDERSIDE OF METAL DECK FOR ALL WALLS GREATER THAT EXTEND TO UNDERSIDE OF ROOF DECK, AND TO ALL LOAD-BEARING WALLS.
6. SEE DRAWING A-521 FOR TYPICAL PENETRATION DETAILS THROUGH FIRE-RATED PARTITIONS.
7. PROVIDE CEMENTITIOUS BACKER UNITS (AT SHOWER WALLS) OR WATER RESISTANT GYPSUM BOARD (AT ALL OTHER TOILET OR RESTROOM WALLS) ON WET SIDE WALL.

PARTITION TYPE SYMBOL LEGEND:

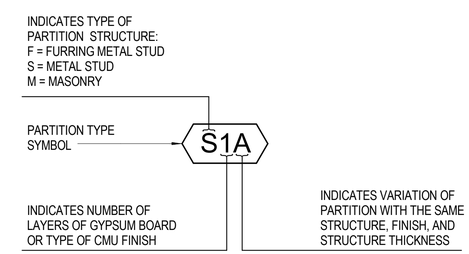

SYM	DESCRIPTION	DATE	APPR

NAVFAC

COMMONWEALTH OF VIRGINIA
JOHN B. ANDERSON III
Lic. No. 015146
3/18/2016
ARCHITECT

Wiley|Wilson | BURNS McDONNELL
JOINT VENTURE

A/E INFO

APPROVED
FOR COMMANDER NAVFAC / B.L.T.L.

ACTIVITY

SATISFACTORY TO DATE
DES JBA | DRW JBA | CHK LTC
PROJECT MANAGER
IPT TECH. BRANCH HEAD
CHIEF ENG/ARCH

DEPARTMENT OF THE NAVY
NAVAL FACILITIES ENGINEERING COMMAND
WEBSTER FIELD, NAS PATUXENT RIVER
NAVAL FACILITIES ENGINEERING COMMAND ~ WASHINGTON
ST. INIGOES, MD
NAVAL AIR STATION PATUXENT RIVER
ST. INIGOES, MD
BUILDING 8008 REPAIRS, ALTERATIONS AND ADDITION
PARTITION TYPES

SCALE: AS NOTED
EPROJECT NO. 1183080
CONSTR. CONTR. NO. N40080-15-D-0452
NAVFAC DRAWING NO. 13078364
SHEET 80 OF 180
A-504

DRAWFORM REVISION: 10 MAY 2014

FILE NAME: C:\Revit_Projects\86314_A_Central_jbanderson@burnsmcd.com.rvt
REVDATE: 3/18/2016 9:18:13 AM

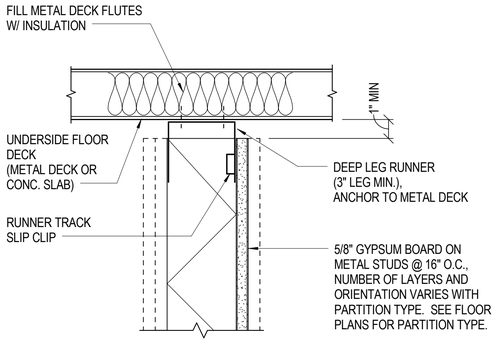

C1 INTERIOR PARTITION DETAILS
SCALE: NOT TO SCALE

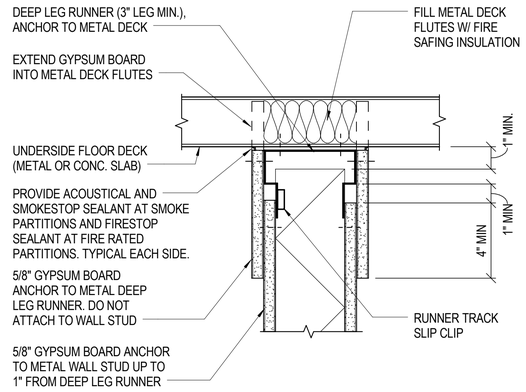

UL SYSTEM NUMBER: HW-D-0042
HW-D-0044

C2 INTERIOR PARTITION DETAILS
SCALE: NOT TO SCALE

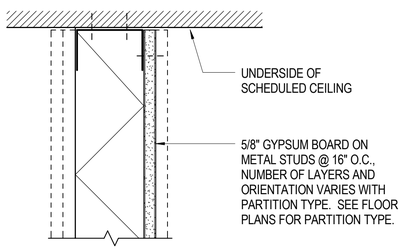

B1 INTERIOR PARTITION DETAILS
SCALE: NOT TO SCALE

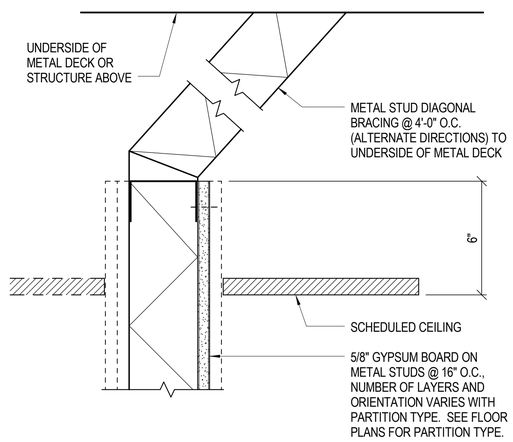

B2 INTERIOR PARTITION DETAILS
SCALE: NOT TO SCALE

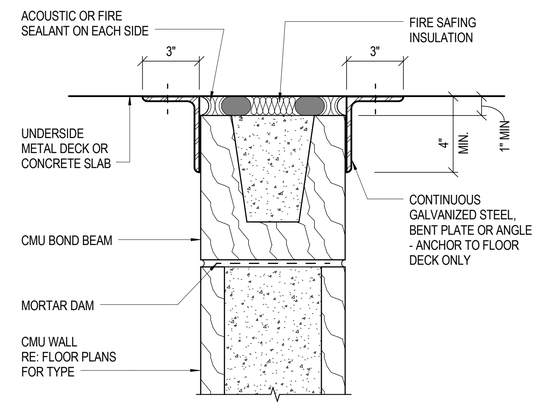

UL SYSTEM NUMBER: HW-D-0098
HW-D-0110

B4 INTERIOR PARTITION DETAILS
SCALE: NOT TO SCALE

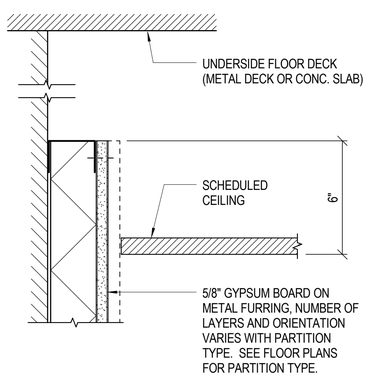

A1 INTERIOR PARTITION DETAILS
SCALE: NOT TO SCALE

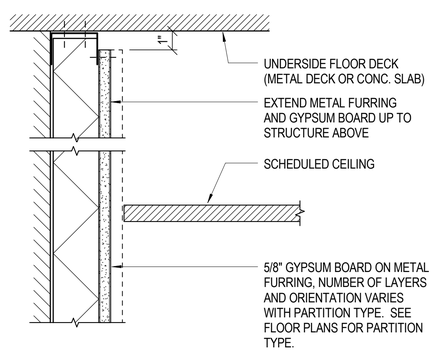

A2 INTERIOR PARTITION DETAILS
SCALE: NOT TO SCALE

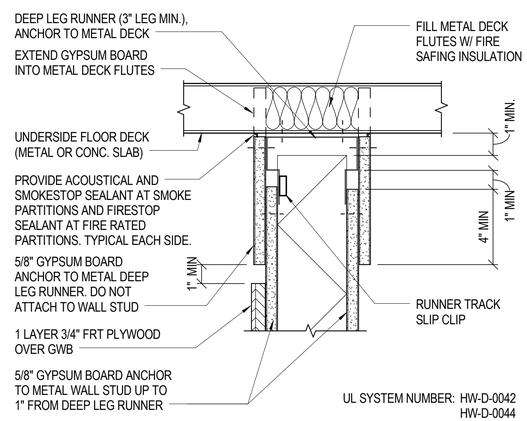

UL SYSTEM NUMBER: HW-D-0042
HW-D-0044

A3 INTERIOR PARTITION DETAILS
SCALE: NOT TO SCALE

SYM	DESCRIPTION	DATE	APPR

NAVFAC

COMMONWEALTH OF VIRGINIA
JOHN B. ANDERSON III
Lic. No. 015146
3/18/2016
ARCHITECT

Wiley|Wilson | BURNS McDONNELL
JOINT VENTURE

A/E INFO

APPROVED
FOR COMMANDER NAVFAC / B.L.T.L.
ACTIVITY
SATISFACTORY TO DATE
DES JBA | DRW JBA | CHK LTC
PROJECT MANAGER
IPT TECH. BRANCH HEAD
CHIEF ENG/ARCH

DEPARTMENT OF THE NAVY
NAVAL FACILITIES ENGINEERING COMMAND
WEBSTER FIELD, NAS PATUXENT RIVER
NAVAL FACILITIES ENGINEERING COMMAND ~ WASHINGTON
ST. INIGOES, MD
NAVAL AIR STATION PATUXENT RIVER
ST. INIGOES, MD
BUILDING 8008 REPAIRS, ALTERATIONS AND ADDITION
PARTITION TYPE DETAILS

SCALE: AS NOTED
EPROJECT NO. 1183080
CONSTR. CONTR. NO. N40080-15-D-0452
NAVFAC DRAWING NO. 13078365
SHEET 81 OF 180
A-511

DRAWFORM REVISION: 10 MAY 2014

FILE NAME: C:\Revit_Projects\86314_A_Central_jbanderson@burnsmcd.com.rvt
REVDATE: 3/18/2016 9:18:19 AM

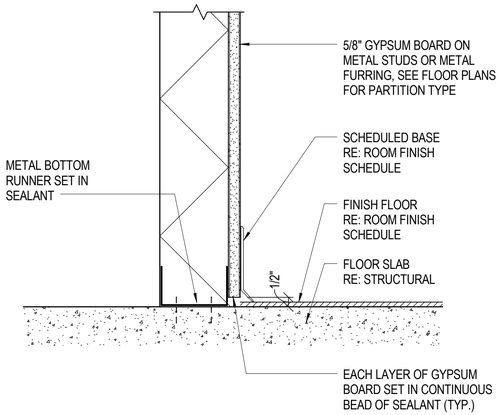

C1 INTERIOR PARTITION DETAILS
SCALE: NOT TO SCALE

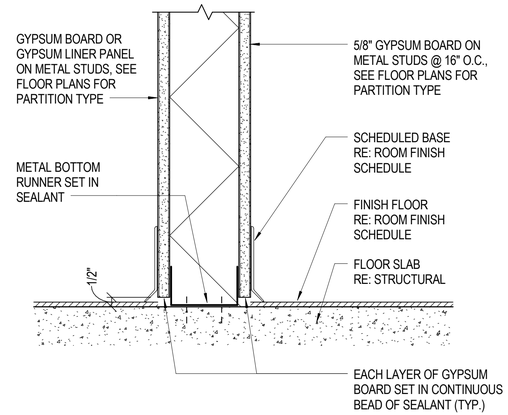

C2 INTERIOR PARTITION DETAILS
SCALE: NOT TO SCALE

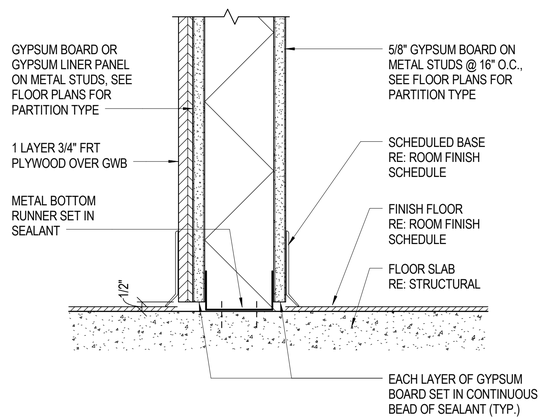

B2 INTERIOR PARTITION DETAILS
SCALE: NOT TO SCALE

SYM	DESCRIPTION	DATE	APPR

NAVFAC

COMMONWEALTH OF VIRGINIA
JOHN B. ANDERSON III
Lic. No. 015146
3/18/2016
ARCHITECT

Wiley|Wilson | BURNS McDONNELL
JOINT VENTURE

A/E INFO

APPROVED
FOR COMMANDER NAVFAC / B.L.T.L

ACTIVITY

SATISFACTORY TO DATE

DES JBA	DRW JBA	CHK LTC

PROJECT MANAGER
IPT TECH. BRANCH HEAD
CHIEF ENG/ARCH

DEPARTMENT OF THE NAVY
NAVAL FACILITIES ENGINEERING COMMAND
WEBSTER FIELD, NAS PATUXENT RIVER

NAVAL FACILITIES ENGINEERING COMMAND ~ WASHINGTON
ST. INIGOES, MD

NAVAL AIR STATION PATUXENT RIVER
ST. INIGOES, MD

BUILDING 8008 REPAIRS, ALTERATIONS AND ADDITION

PARTITION TYPE DETAILS

SCALE: AS NOTED
EPROJECT NO. 1183080
CONSTR. CONTR. NO. N40080-15-D-0452
NAVFAC DRAWING NO. 13078366
SHEET 82 OF 180
A-512

DRAWFORM REVISION: 10 MAY 2014

UNCLASSIFIED/ /FOR OFFICIAL USE ONLY
FILE NAME: C:\Revit_Projects\86314_A_Central_jbanderson@burnsmcd.com.rvt
REV DATE: 3/18/2016 9:18:21 AM

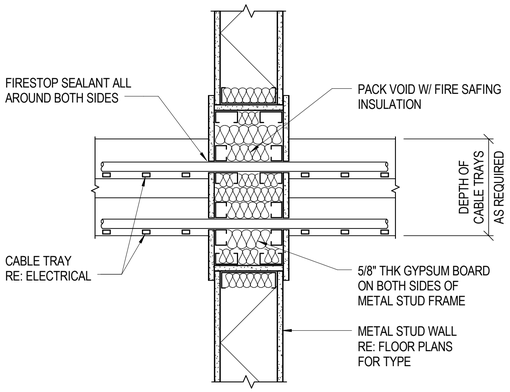

EQUAL TO UL SYSTEM NUMBER W-L-4005 TYPICAL CABLE TRAY PENETRATING GYP BOARD WALL DETAIL

C1 METAL STUD WALL PENETRATION
SCALE: NOT TO SCALE

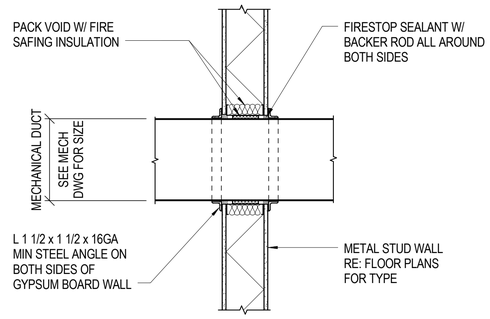

EQUAL TO UL SYSTEM NUMBER W-L-7040 OR W-L-7042 TYP. MECHANICAL DUCT PENETRATING GYP. BOARD WALL

C2 METAL STUD WALL PENETRATION
SCALE: NOT TO SCALE

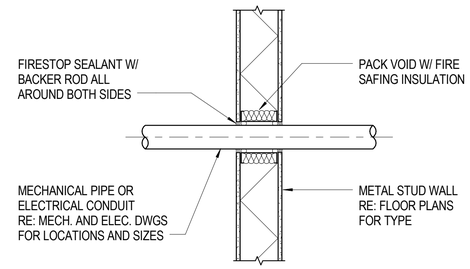

EQUAL TO UL SYSTEM NUMBER W-L-1001 TYP. PIPE OR CONDUIT PENETRATING GYP. BOARD WALL WITHOUT SLEEVE

C3 METAL STUD WALL PENETRATION
SCALE: NOT TO SCALE

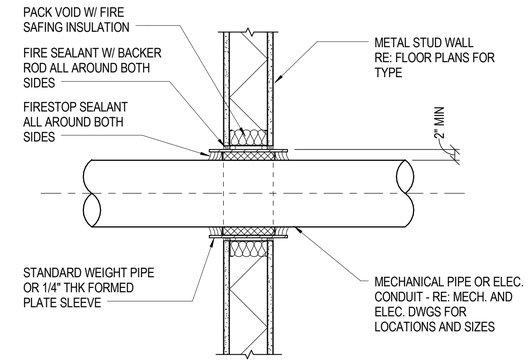

EQUAL TO UL SYSTEM NUMBER W-L-1003 TYP. PIPE OR CONDUIT PENETRATING GYP. BOARD WALL WITH SLEEVE DETAIL

C4 METAL STUD WALL PENETRATION
SCALE: NOT TO SCALE

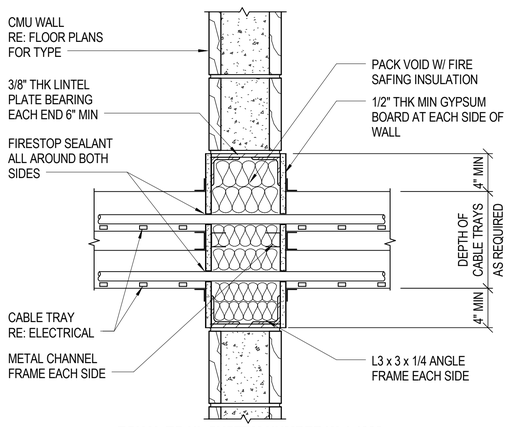

EQUAL TO UL SYSTEM NUMBER W-J-4008 TYPICAL CABLE TRAY PENETRATING CMU WALL DETAIL

B1 CMU WALL PENETRATION
SCALE: NOT TO SCALE

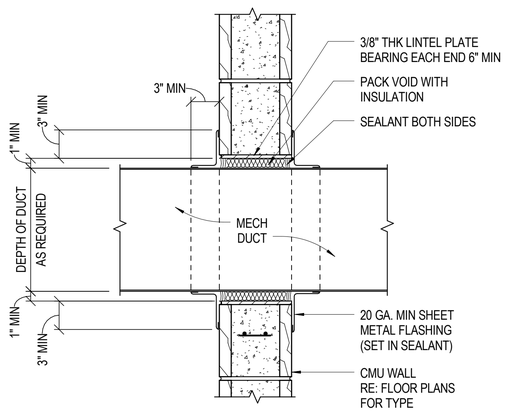

EQUAL TO UL SYSTEM NUMBER W-J-7021 TYP. METAL DUCT PENETRATING CMU WALL DETAIL (w/o DAMPER)

B2 CMU WALL PENETRATION
SCALE: NOT TO SCALE

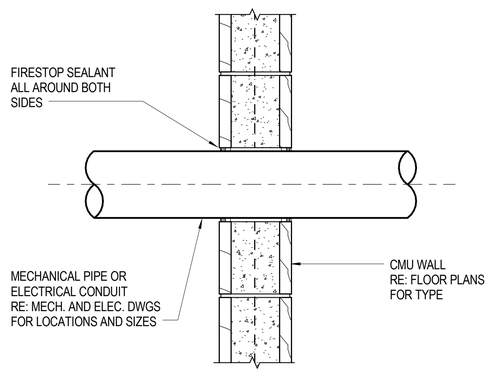

EQUAL TO UL SYSTEM NUMBER W-J-2071 PIPE OR CONDUIT PENETRATING CMU WALL w/o STEEL SLEEVE DETAIL

B3 CMU WALL PENETRATION
SCALE: NOT TO SCALE

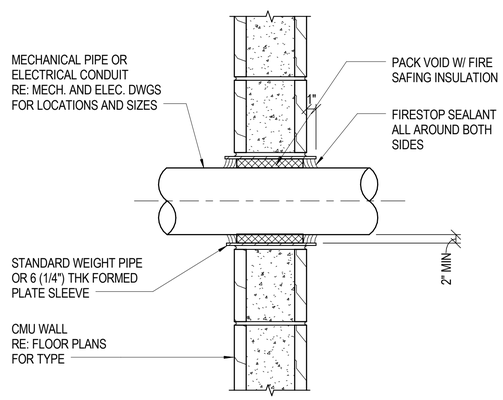

EQUAL TO UL SYSTEM NUMBER W-J-2071 PIPE OR CONDUIT THROUGH CMU WALL w/ STEEL SLEEVE

B4 CMU WALL PENETRATION
SCALE: NOT TO SCALE

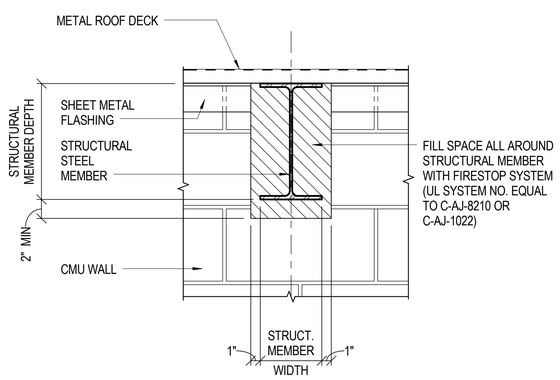

STRUCTURAL MEMBER THROUGH INTERIOR MASONRY WALL

A1 DETAIL
SCALE: NOT TO SCALE

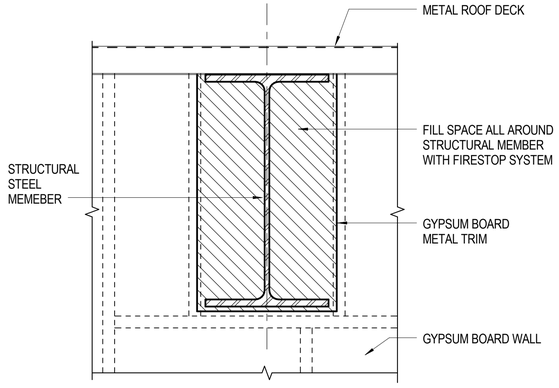

STRUCTURAL MEMBER THROUGH INTERIOR GYPSUM BOARD WALL

A2 DETAIL
SCALE: NOT TO SCALE

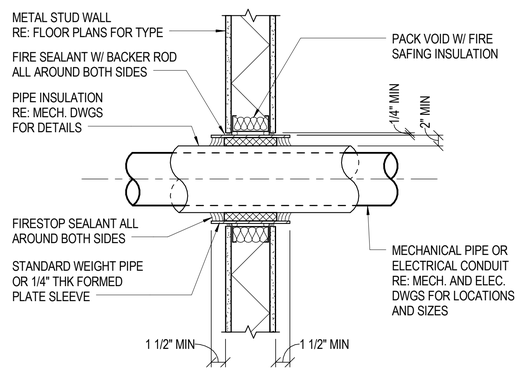

EQUAL TO UL SYSTEM NUMBER W-L-1003 TYP. PIPE OR CONDUIT PENETRATING GYP. BOARD WALL WITH SLEEVE DETAIL

A3 METAL STUD WALL PENETRATION
SCALE: NOT TO SCALE

SYM	DESCRIPTION	DATE	APPR

NAVFAC

COMMONWEALTH OF VIRGINIA
JOHN B. ANDERSON III
Lic. No. 015146
3/18/2016
ARCHITECT

Wiley|Wilson | BURNS McDONNELL
JOINT VENTURE

A/E INFO:

APPROVED
FOR COMMANDER NAVFAC / B.L.T.L.
ACTIVITY
SATISFACTORY TO DATE

DES JBA	DRW JBA	CHK	LTC

PROJECT MANAGER
IPT TECH. BRANCH HEAD
CHIEF ENG/ARCH

DEPARTMENT OF THE NAVY
NAVAL FACILITIES ENGINEERING COMMAND
WEBSTER FIELD, NAS PATUXENT RIVER

NAVAL FACILITIES ENGINEERING COMMAND ~ WASHINGTON
ST. INIGOES, MD

NAVAL AIR STATION PATUXENT RIVER
ST. INIGOES, MD

BUILDING 8008 REPAIRS, ALTERATIONS AND ADDITION

PENETRATION DETAILS

SCALE: AS NOTED
EPROJECT NO. 1183080
CONSTR. CONTR. NO. N40080-15-D-0452
NAVFAC DRAWING NO. 13078367
SHEET 83 OF 180
A-521

DRAWFORM REVISION: 10 MAY 2014

FILE NAME: C:\Revit_Projects\86314_A_Central_jbanderson@burnsmcd.com.rvt
REVDATE: 3/18/2016 9:18:27 AM

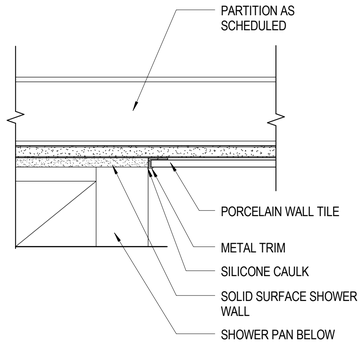

C1 SHOWER DETAIL
SCALE: 3" = 1'-0"

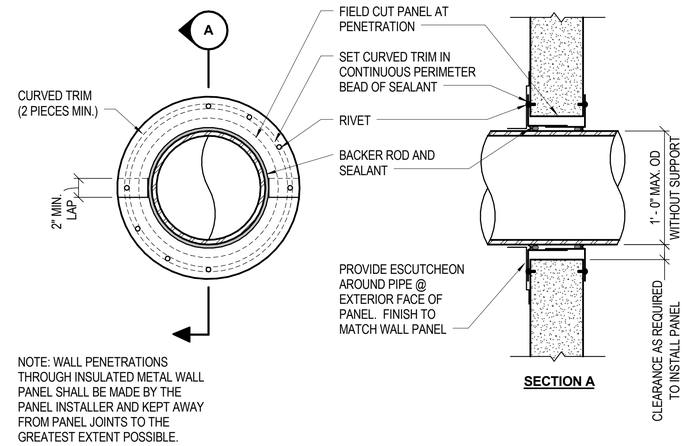

NOTE: WALL PENETRATIONS THROUGH INSULATED METAL WALL PANEL SHALL BE MADE BY THE PANEL INSTALLER AND KEPT AWAY FROM PANEL JOINTS TO THE GREATEST EXTENT POSSIBLE.

C4 WALL PENETRATION
SCALE: NOT TO SCALE

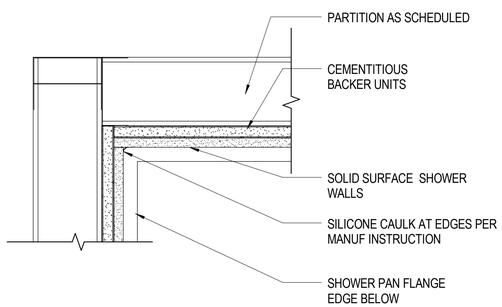

B1 SHOWER INSIDE CORNER DETAIL
SCALE: 3" = 1'-0"

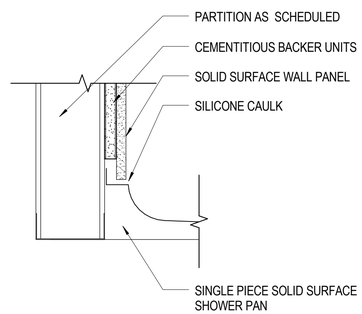

B2 SHOWER BASE DETAIL
SCALE: 3" = 1'-0"

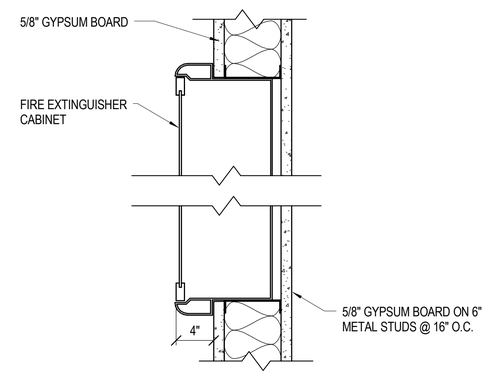

B4 FIRE EXTINGUISHER CABINET
SCALE: NOT TO SCALE

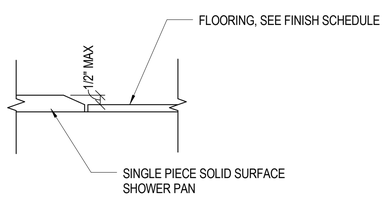

A1 ADA SHOWER PAN DETAIL
SCALE: 3" = 1'-0"

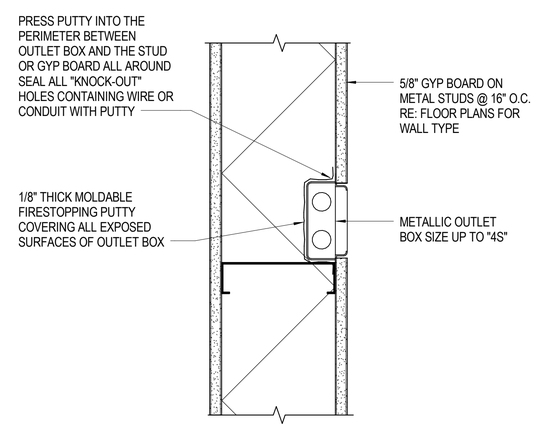

A4 TYPICAL OUTLET FIRE STOPPING
SCALE: NOT TO SCALE

GRAPHIC SCALE:
3" =1'-0" 0' 3" 6" 9"

SYM	DESCRIPTION	DATE	APPR

NAVFAC

COMMONWEALTH OF VIRGINIA
JOHN B. ANDERSON III
Lic. No. 015146
3/18/2016
ARCHITECT

Wiley|Wilson | BURNS McDONNELL
JOINT VENTURE

A/E INFO

APPROVED
FOR COMMANDER NAVFAC / B.L.T.L.
ACTIVITY
SATISFACTORY TO DATE
DES JBA DRW JBA CHK LTC
PROJECT MANAGER
IPT TECH. BRANCH HEAD
CHIEF ENG/ARCH

DEPARTMENT OF THE NAVY
NAVAL FACILITIES ENGINEERING COMMAND
WEBSTER FIELD, NAS PATUXENT RIVER
NAVAL FACILITIES ENGINEERING COMMAND ~ WASHINGTON
ST. INIGOES, MD
NAVAL AIR STATION PATUXENT RIVER
ST. INIGOES, MD
BUILDING 8008 REPAIRS, ALTERATIONS AND ADDITION
MISCELLANEOUS DETAILS

SCALE: AS NOTED
EPROJECT NO. 1183080
CONSTR. CONTR. NO. N40080-15-D-0452
NAVFAC DRAWING NO. 13078368
SHEET 84 OF 180
A-522

DRAWFORM REVISION: 10 MAY 2014

FILE NAME: C:\Revit_Projects\86314_A_Central_jbanderson@burnsmcd.com.rvt
REV/DATE: 3/18/2016 9:18:33 AM

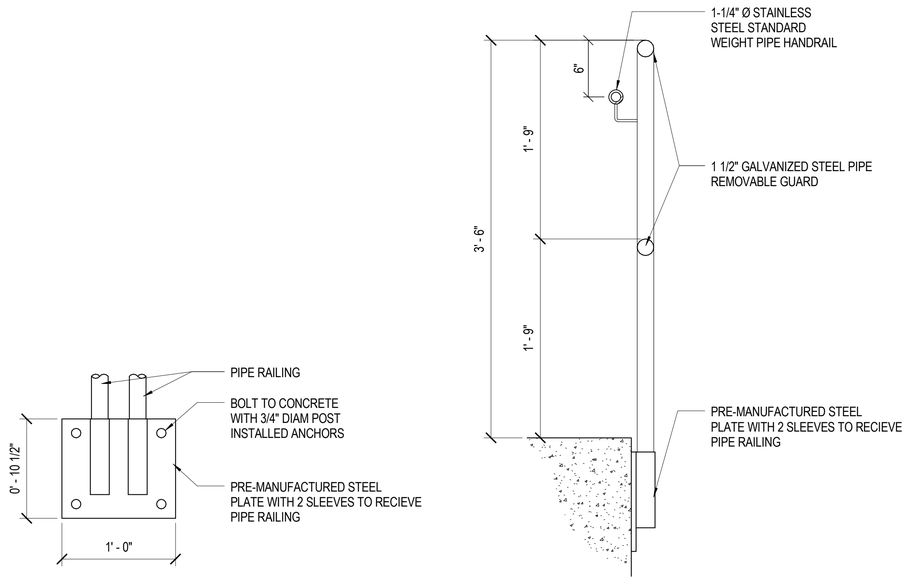

C2 REMOVABLE GUARD DETAIL
SCALE: 1 1/2" = 1'-0"

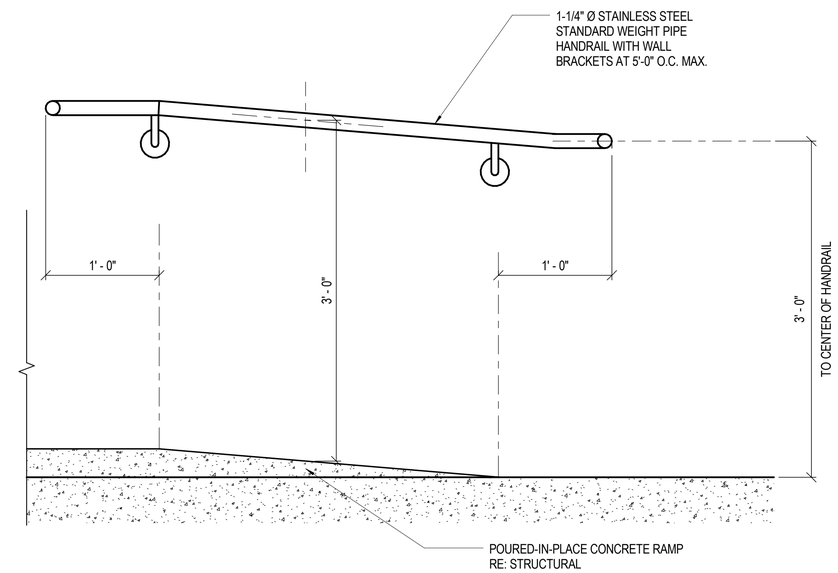

C4 HANDRAIL DETAIL
SCALE: 1 1/2" = 1'-0"

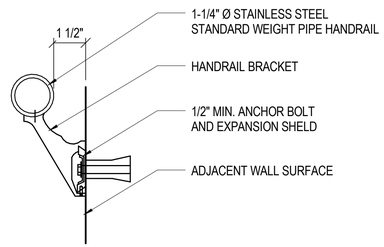

B2 HANDRAIL AT WALL
SCALE: 3" = 1'-0"

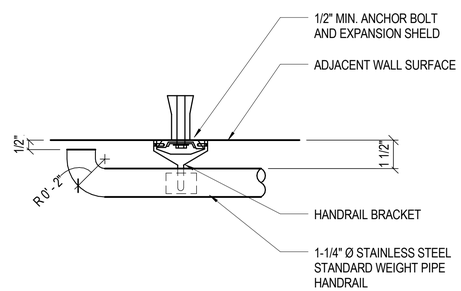

B3 HANDRAIL RETURN
SCALE: 3" = 1'-0"

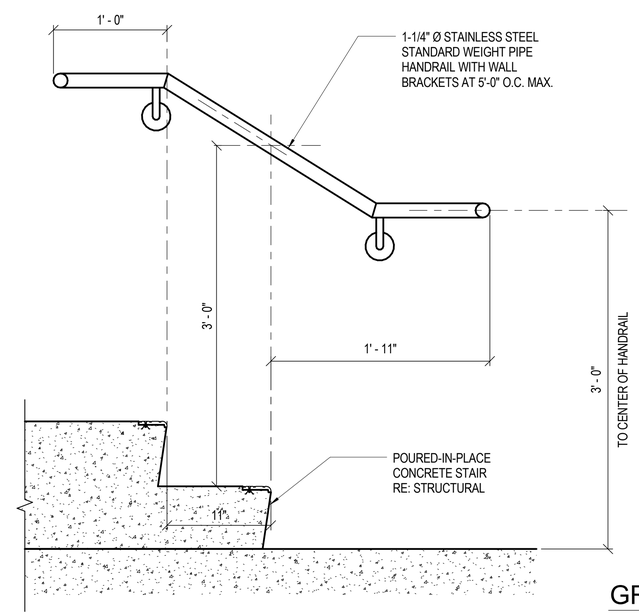

B4 HANDRAIL DETAIL
SCALE: 1 1/2" = 1'-0"

GRAPHIC SCALE:
1 1/2" =1'-0" 0' 4" 8" 1'-4"

GRAPHIC SCALE:
3" =1'-0" 0' 3" 6" 9"

SYM	DESCRIPTION	DATE	APPR

NAVFAC

COMMONWEALTH OF VIRGINIA
JOHN B. ANDERSON III
Lic. No. 015146
3/18/2016
ARCHITECT

Wiley|Wilson | BURNS McDONNELL
JOINT VENTURE

A/E INFO

APPROVED
FOR COMMANDER NAVFAC / B.L.T.L.

ACTIVITY

SATISFACTORY TO DATE
DES JBA DRW JBA CHK LTC
PROJECT MANAGER
IPT TECH. BRANCH HEAD
CHIEF ENG/ARCH

DEPARTMENT OF THE NAVY
NAVAL FACILITIES ENGINEERING COMMAND
WEBSTER FIELD, NAS PATUXENT RIVER
NAVAL FACILITIES ENGINEERING COMMAND ~ WASHINGTON
ST. INIGOES, MD
NAVAL AIR STATION PATUXENT RIVER
ST. INIGOES, MD

BUILDING 8008 REPAIRS, ALTERATIONS AND ADDITION

RAILING DETAILS

SCALE: AS NOTED
EPROJECT NO. 1183080
CONSTR. CONTR. NO. N40080-15-D-0452
NAVFAC DRAWING NO. 13078369
SHEET 85 OF 180
A-531

DRAWFORM REVISION: 10 MAY 2014

FILE NAME: C:\Revit_Projects\86314_A_Central_jbanderson@burnsmcd.com.rvt
REV/DATE: 3/18/2016 9:18:36 AM

NOTE: INSTALL LEDGER, HANGERS, CEILING JOISTS, PLYWOOD SHEATHING, AND ICE AND WATER SHIELD DURING PHASE 1 CONSTRUCTION TO PROVIDE TEMPORARY PROTECTION TO ELECTRICAL ROOM. AFTER NEW ROOF STRUCTURE AND MEMBRANE IS INSTALLED IN PHASE 3, REMOVE PLYWOOD FROM FACE OF VERTICAL WALL AND COMPLETE WALL UP TO ROOF DECK IN ACCORDANCE WITH THE SCHEDULED PARTITION TYPE.

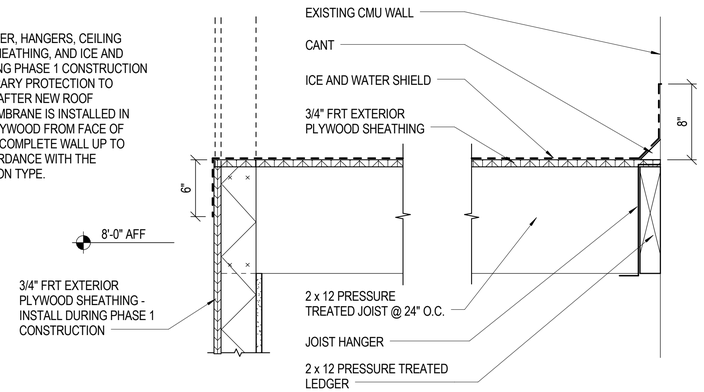

D2 TEMPORARY CEILING AT ELECTRICAL ROOM
SCALE: 1 1/2" = 1'-0"

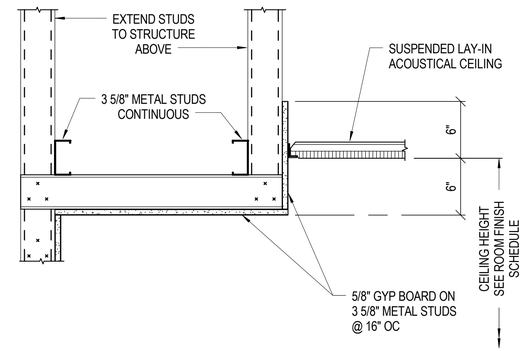

D3 CEILING SOFFIT
SCALE: 1 1/2" = 1'-0"

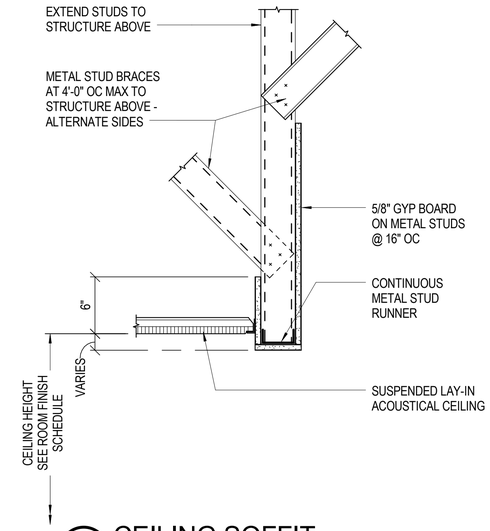

D5 CEILING SOFFIT
SCALE: 1 1/2" = 1'-0"

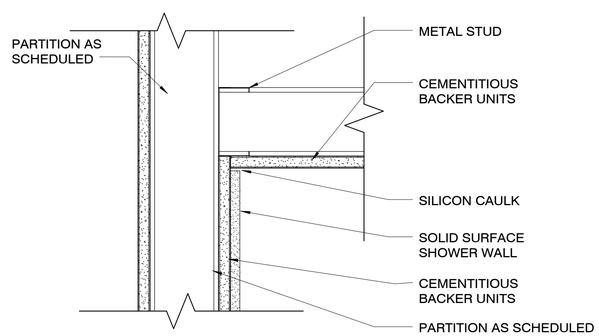

B1 SHOWER SECTION - INSIDE CEILING EDGE
SCALE: 3" = 1'-0"

GRAPHIC SCALE:
1 1/2" =1'-0" 0' 4" 8" 1'-4"

GRAPHIC SCALE:
3" =1'-0" 0' 3" 6" 9"

SYM	DESCRIPTION	DATE	APPR

NAVFAC

COMMONWEALTH OF VIRGINIA
JOHN B. ANDERSON III
Lic. No. 015146
3/18/2016
ARCHITECT

Wiley|Wilson | BURNS McDONNELL
JOINT VENTURE

A/E INFO

APPROVED
FOR COMMANDER NAVFAC / B.L.T.L.
ACTIVITY
SATISFACTORY TO DATE
DES JBA | DRW JBA | CHK LTC
PROJECT MANAGER
IPT TECH. BRANCH HEAD
CHIEF ENG/ARCH

DEPARTMENT OF THE NAVY
NAVAL FACILITIES ENGINEERING COMMAND
WEBSTER FIELD, NAS PATUXENT RIVER
NAVAL FACILITIES ENGINEERING COMMAND ~ WASHINGTON
ST. INIGOES, MD
NAVAL AIR STATION PATUXENT RIVER
ST. INIGOES, MD
BUILDING 8008 REPAIRS, ALTERATIONS AND ADDITION
CEILING DETAILS

SCALE: AS NOTED
EPROJECT NO. 1183080
CONSTR. CONTR. NO. N40080-15-D-0452
NAVFAC DRAWING NO. 13078370
SHEET 86 OF 180
A-561

DRAWFORM REVISION: 10 MAY 2014

FILE NAME: C:\Revit_Projects\86314_A_Central_jbanderson@burnsmcd.com.rvt
REV/DATE: 3/18/2016 8:18:39 AM

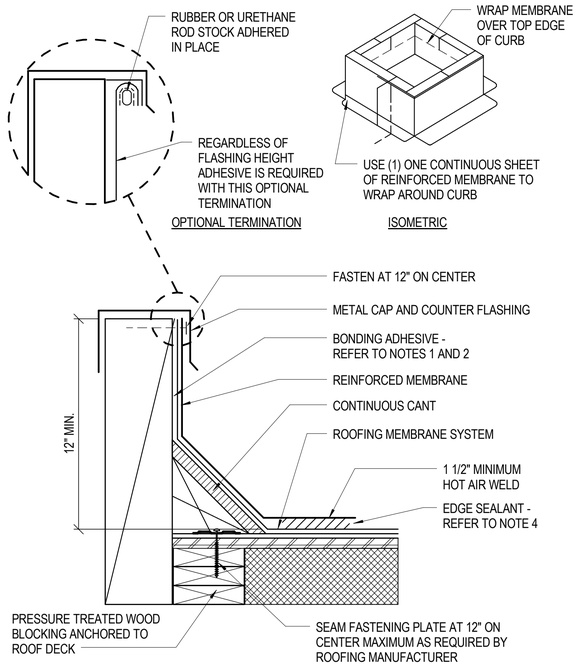

NOTES:

1. ROOF SYSTEM MANUFACTURER APPROVED BONDING ADHESIVE ON ALL BASE FLASHING SHALL BE FULLY-ADHERED FULL HEIGHT.
2. TERMINATION BAR SHALL BE INSTALLED ON VERTICAL SURFACE.
3. FLASHING MEMBRANE FASTENED APPROXIMATELY 12" ON CENTER. IF FASTENER PENETRATES METAL COUNTER FLASHING, USE NEOPRENE WASHER OR APPLY WATER CUT-OFF MASTIC UNDER COUNTER FLASHING OR CAULK FASTENER HEAD.
4. REFER TO SPECIFICATION FOR ACCEPTABLE FASTENERS AND PLATES.
5. COORDINATE ANCHORAGE OF WOOD BLOCKING AND ROOFING WITH STRUCTURAL DRAWINGS.

B1 ROOF CURB FLASHING DETAIL

SCALE: NOT TO SCALE

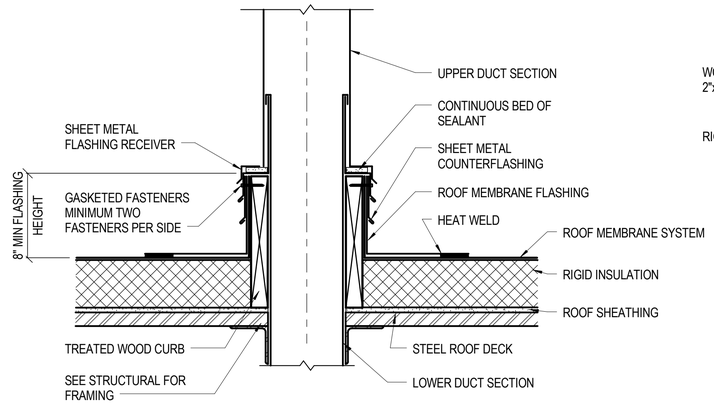

C3 TYP ROOF PENETRATION FLASHING DETAIL

SCALE: 1 1/2" = 1'-0"

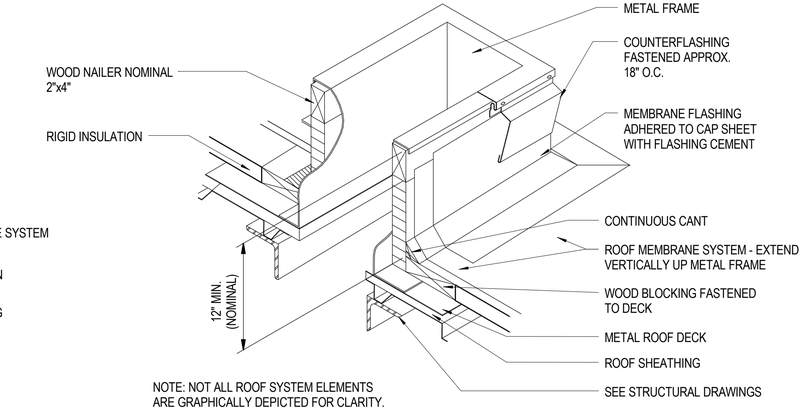

NOTE: NOT ALL ROOF SYSTEM ELEMENTS ARE GRAPHICALLY DEPICTED FOR CLARITY.

C4 ROOF CURB

SCALE: NOT TO SCALE

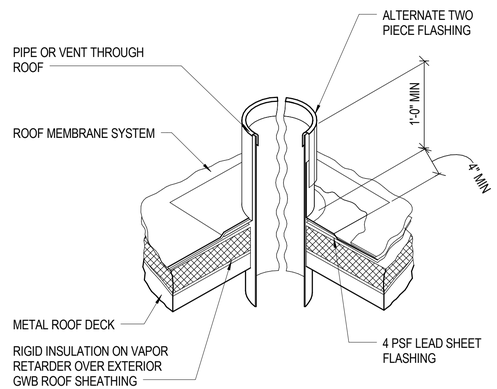

B3 ROOF PENETRATION

SCALE: 1 1/2" = 1'-0"

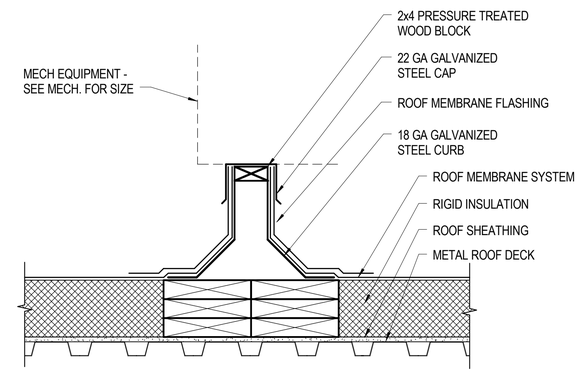

B4 ROOF CURB DETAIL

SCALE: 1 1/2" = 1'-0"

GRAPHIC SCALE:

1 1/2" =1'-0" 0' 4" 8" 1'-4"

SYM	DESCRIPTION	DATE	APPR

NAVFAC

COMMONWEALTH OF VIRGINIA
JOHN B. ANDERSON III
Lic. No. 015146
3/18/2016
ARCHITECT

Wiley|Wilson | BURNS McDONNELL
JOINT VENTURE

A/E INFO

APPROVED
FOR COMMANDER NAVFAC / B.L.T.L.

ACTIVITY

SATISFACTORY TO DATE
DES JBA | DRW JBA | CHK LTC
PROJECT MANAGER
IPT TECH. BRANCH HEAD
CHIEF ENG/ARCH

DEPARTMENT OF THE NAVY
NAVAL FACILITIES ENGINEERING COMMAND
WEBSTER FIELD, NAS PATUXENT RIVER
NAVAL FACILITIES ENGINEERING COMMAND ~ WASHINGTON
ST. INIGOES, MD
NAVAL AIR STATION PATUXENT RIVER
ST. INIGOES, MD
BUILDING 8008 REPAIRS, ALTERATIONS AND ADDITION
ROOF DETAILS

SCALE: AS NOTED
EPROJECT NO. 1183080
CONSTR. CONTR. NO. N40080-15-D-0452
NAVFAC DRAWING NO. 13078371
SHEET 87 OF 180
A-571

DRAWFORM REVISION: 10 MAY 2014

FILE NAME: C:\Revit_Projects\86314_A_Central_jbanderson@burnsmcd.com.rvt
REV/DATE: 3/18/2016 9:18:45 AM

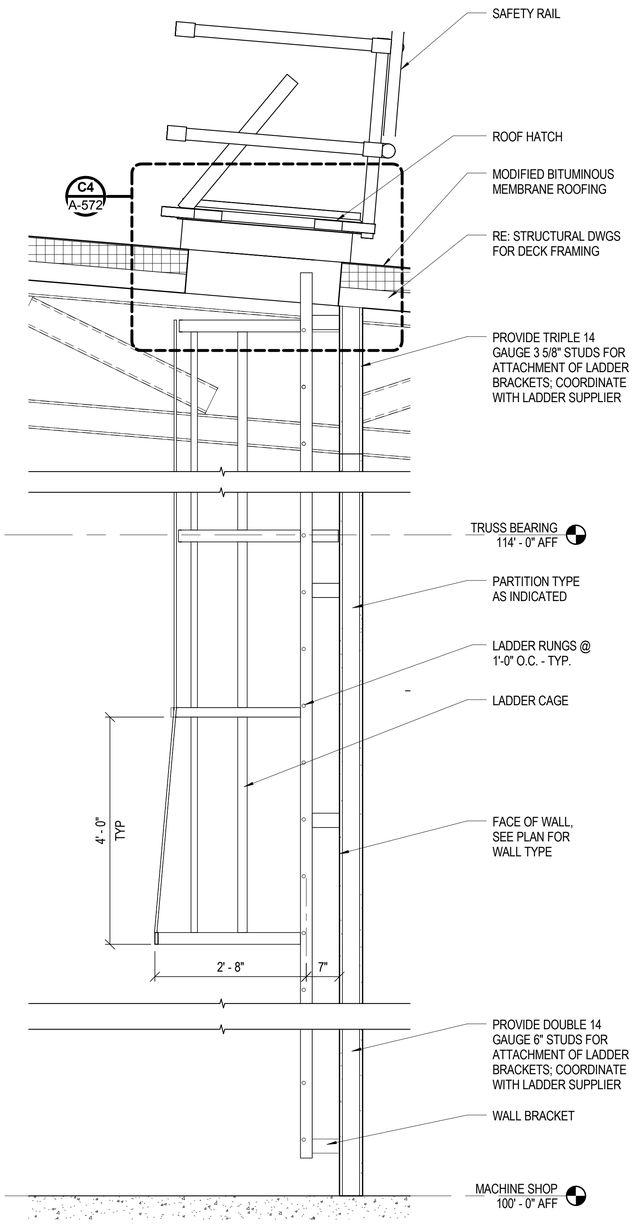

A1 ROOF LADDER
SCALE: 3/4" = 1'-0"

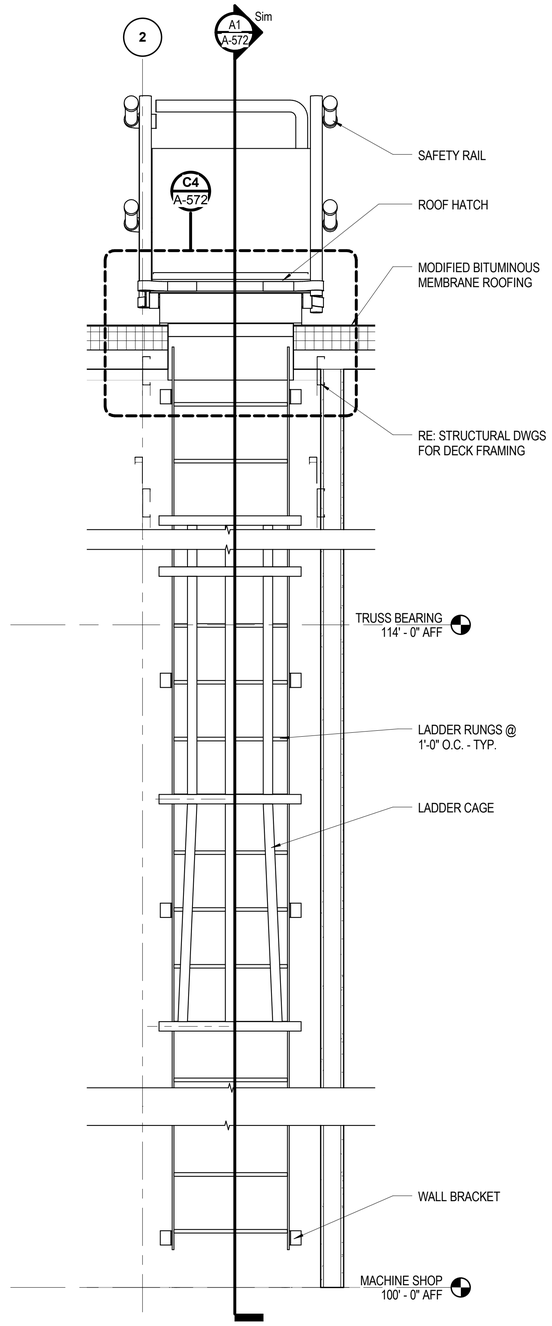

A2 ROOF LADDER
SCALE: 3/4" = 1'-0"

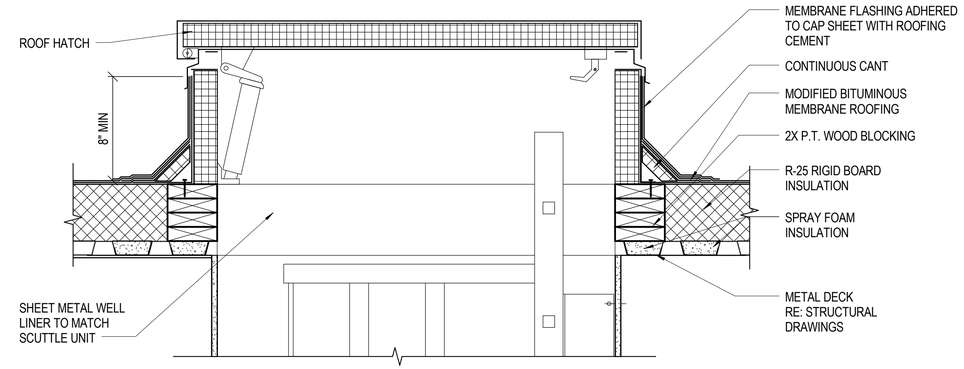

C4 ROOF HATCH
SCALE: 1 1/2" = 1'-0"

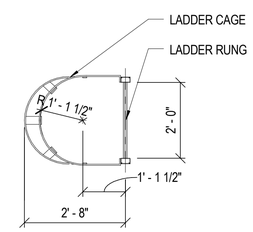

NOTE:
PROVIDE ASTM A36 MATERIALS FOR LADDER SIDE RAILS AND RUNGS.

B4 ROOF LADDER PLAN
SCALE: 1/2" = 1'-0"

GRAPHIC SCALE:
1/2" =1'-0" 0' 1' 2' 4'

GRAPHIC SCALE:
3/4" =1'-0" 0' 1' 2' 3'

GRAPHIC SCALE:
1 1/2" =1'-0" 0' 4" 8" 1'-4"

SYM	DESCRIPTION	DATE	APPR

NAVFAC

COMMONWEALTH OF VIRGINIA
JOHN B. ANDERSON III
Lic. No. 015146
3/18/2016
ARCHITECT

Wiley|Wilson | BURNS McDONNELL
JOINT VENTURE

A/E INFO.

APPROVED
FOR COMMANDER NAVFAC / B.L.T.L.

ACTIVITY

SATISFACTORY TO DATE

DES JBA	DRW JBA	CHK LTC

PROJECT MANAGER
IPT TECH. BRANCH HEAD
CHIEF ENG/ARCH

DEPARTMENT OF THE NAVY
NAVAL FACILITIES ENGINEERING COMMAND
WEBSTER FIELD, NAS PATUXENT RIVER

NAVAL FACILITIES ENGINEERING COMMAND ~ WASHINGTON
ST. INIGOES, MD

NAVAL AIR STATION PATUXENT RIVER
ST. INIGOES, MD

BUILDING 8008 REPAIRS, ALTERATIONS AND ADDITION

ROOF DETAILS

SCALE: AS NOTED
EPROJECT NO. 1183080
CONSTR. CONTR. NO. N40080-15-D-0452
NAVFAC DRAWING NO. 13078372
SHEET 88 OF 180
A-572

DRAWFORM REVISION: 10 MAY 2014

FILE NAME: C:\Revit_Projects\86314_A_Central_jbanderson@burnsmcd.com.rvt
REVDATE: 3/18/2016 9:18:52 AM

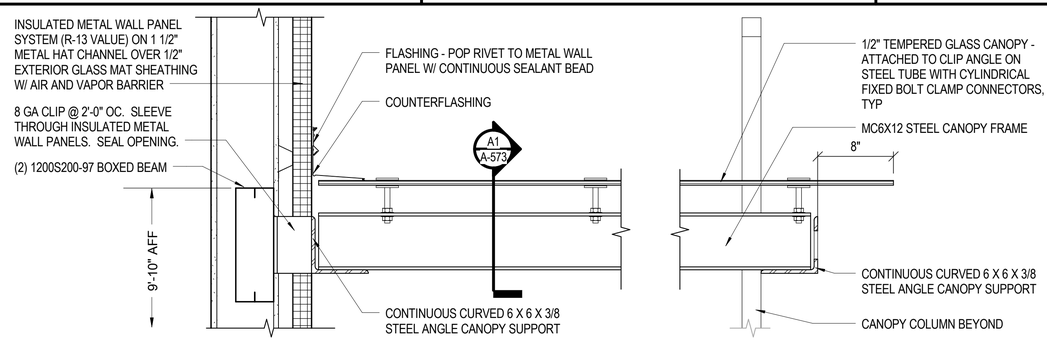

D1 ENTRY CANOPY SECTION
SCALE: 1 1/2" = 1'-0"

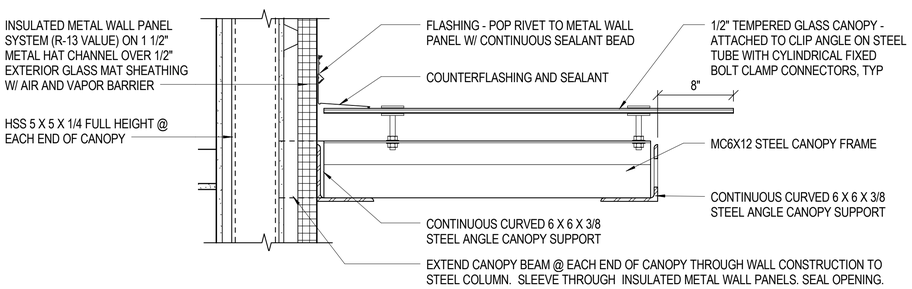

C1 CANOPY SECTION - SECONDARY ENTRY
SCALE: 1 1/2" = 1'-0"

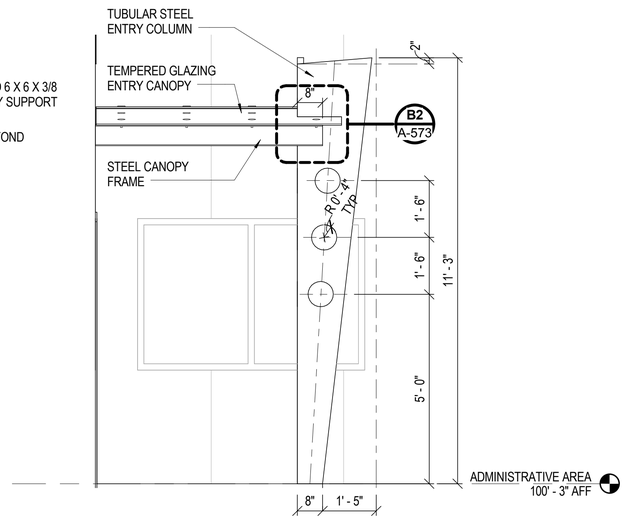

C4 ENTRY CANOPY ELEVATION
SCALE: 1/2" = 1'-0"

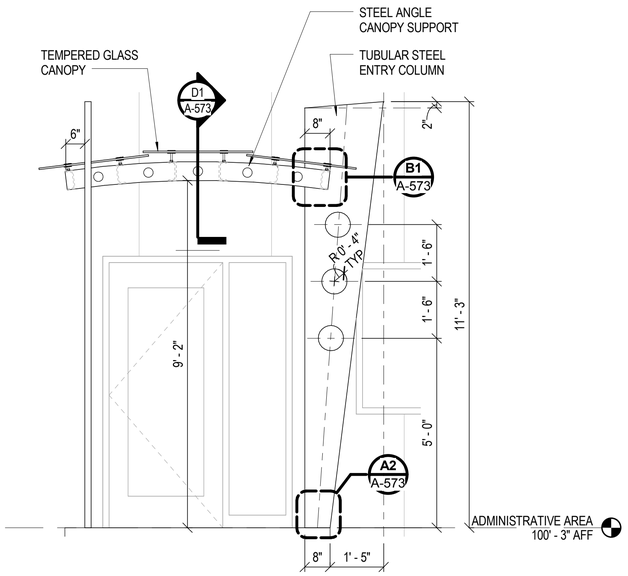

C5 ENTRY CANOPY ELEVATION
SCALE: 1/2" = 1'-0"

GENERAL NOTES:

1. ALL ARCHITECTURALLY EXPOSED WELDS SHALL BE OVERSIZED AND GROUND CONTOURED OR BLENDED TO PROVIDE A SMOOTH TRANSITION. PROVIDE SAMPLE TO THE GOVERNMENT FOR APPROVAL PRIOR TO FABRICATION.

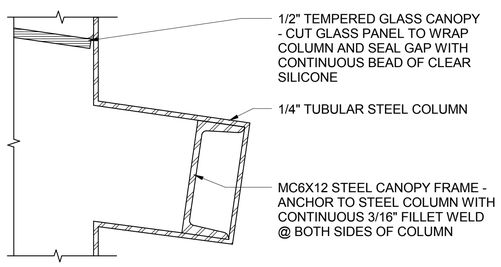

B1 CONNECTION DETAIL
SCALE: 3" = 1'-0"

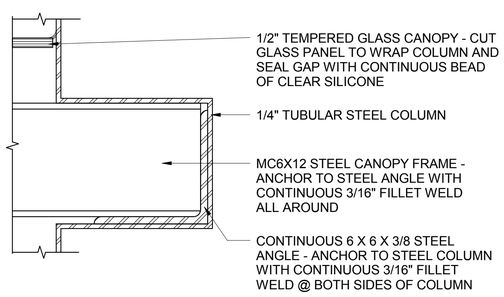

B2 CONNECTION DETAIL
SCALE: 3" = 1'-0"

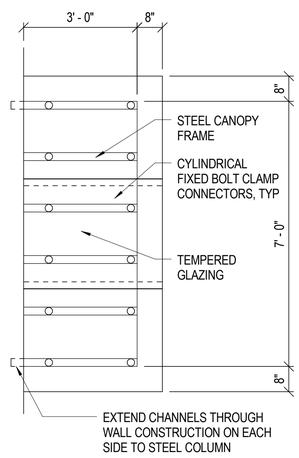

A3 CANOPY ROOF PLAN
SCALE: 1/2" = 1'-0"

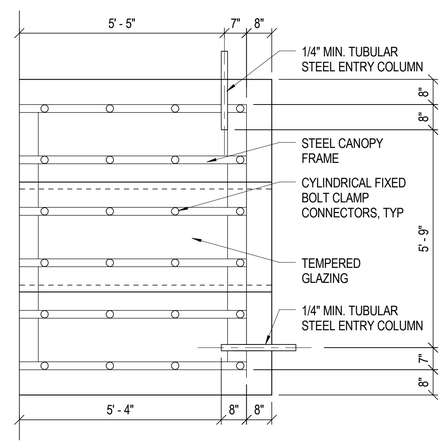

A4 CANOPY ROOF PLAN
SCALE: 1/2" = 1'-0"

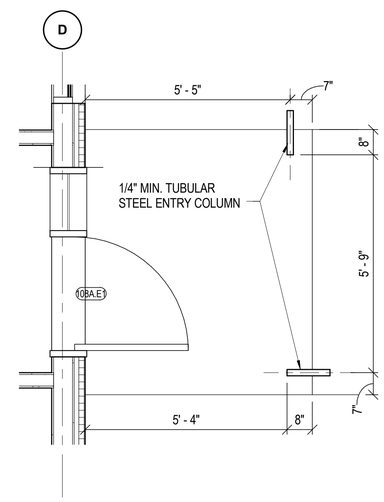

A5 ENLARGED FLOOR PLAN
SCALE: 1/2" = 1'-0"

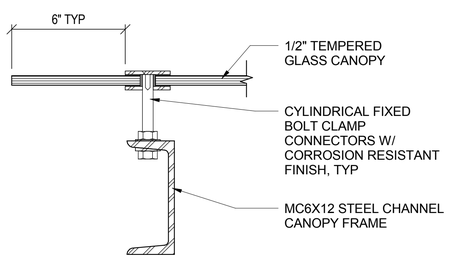

A1 CANOPY DETAIL
SCALE: 3" = 1'-0"

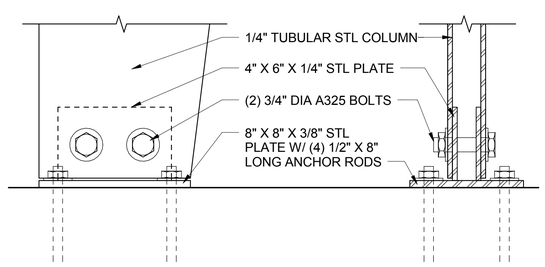

A2 ENTRY COLUMN BASE DETAIL
SCALE: 3" = 1'-0"

GRAPHIC SCALE:
1/2" =1'-0" 0' 1' 2' 4'

GRAPHIC SCALE:
1 1/2" =1'-0" 0' 4" 8" 1'-4"

GRAPHIC SCALE:
3" =1'-0" 0' 3" 6" 9"

SYM	DESCRIPTION	DATE	APPR

NAVFAC

COMMONWEALTH OF VIRGINIA
JOHN B. ANDERSON III
Lic. No. 015146
3/18/2016
ARCHITECT

Wiley|Wilson | BURNS McDONNELL
JOINT VENTURE

A/E INFO

APPROVED
FOR COMMANDER NAVFAC / B.L.T.L.
ACTIVITY
SATISFACTORY TO DATE
DES JBA | DRW JBA | CHK | LTC
PROJECT MANAGER
IPT TECH. BRANCH HEAD
CHIEF ENG/ARCH

DEPARTMENT OF THE NAVY
NAVAL FACILITIES ENGINEERING COMMAND
WEBSTER FIELD, NAS PATUXENT RIVER
NAVAL FACILITIES ENGINEERING COMMAND ~ WASHINGTON
ST. INIGOES, MD
NAVAL AIR STATION PATUXENT RIVER
ST. INIGOES, MD
BUILDING 8008 REPAIRS, ALTERATIONS AND ADDITION
CANOPY DETAILS

SCALE: AS NOTED
EPROJECT NO. 1183080
CONSTR. CONTR. NO. N40080-15-D-0452
NAVFAC DRAWING NO. 13078373
SHEET 89 OF 180
A-573

DRAWFORM REVISION: 10 MAY 2014

FILE NAME: C:\Revit_Projects\86314_A_Central_jbanderson@burnsmcd.com.rvt
REVDATE: 3/18/2016 9:19:01 AM

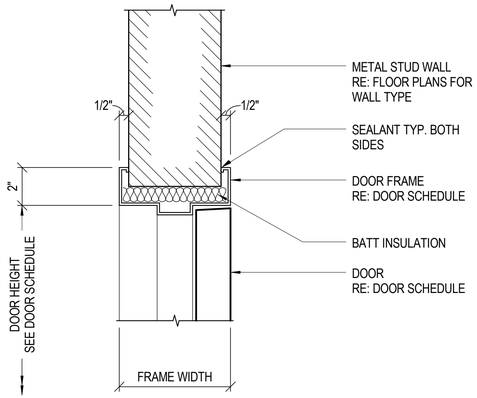

D1 DOOR HEAD
SCALE: 3" = 1'-0"

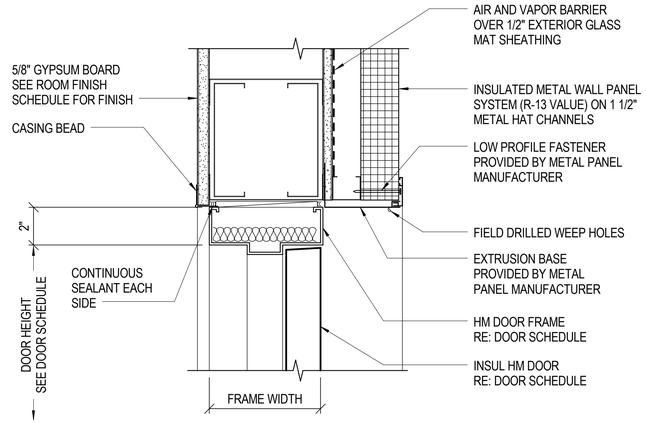

D2 DOOR HEAD
SCALE: 3" = 1'-0"

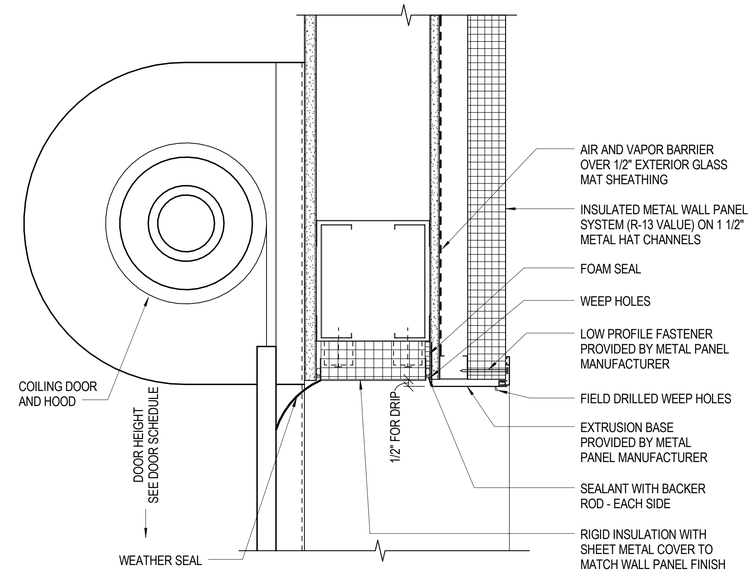

D4 DOOR HEAD
SCALE: 3" = 1'-0"

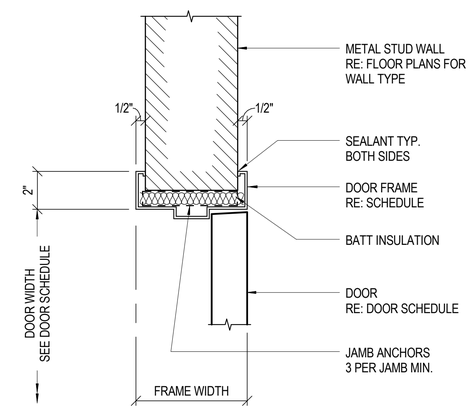

B1 DOOR JAMB
SCALE: 3" = 1'-0"

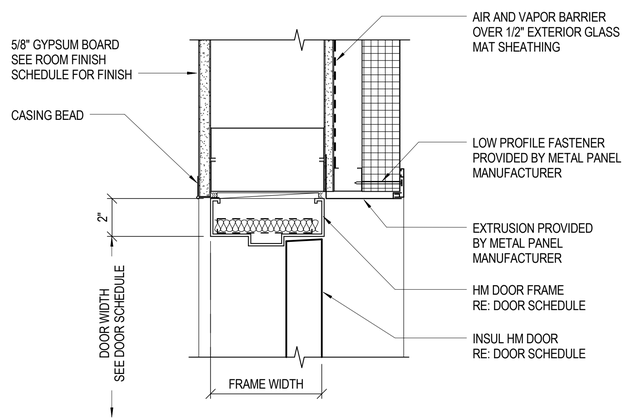

B2 DOOR JAMB
SCALE: NOT TO SCALE

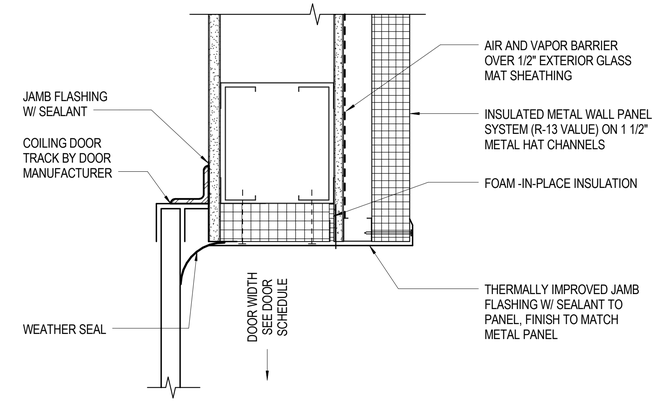

B4 DOOR JAMB
SCALE: 3" = 1'-0"

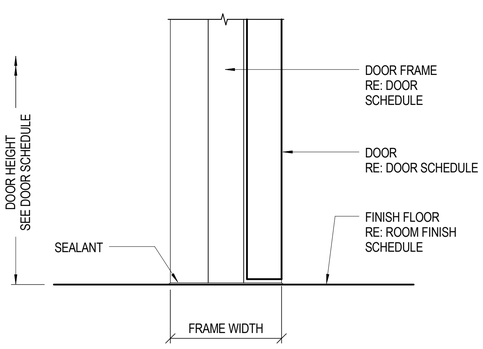

A1 DOOR SILL
SCALE: 3" = 1'-0"

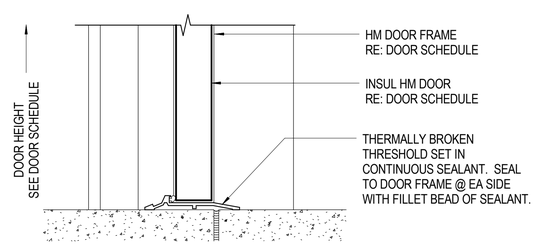

A2 DOOR SILL
SCALE: 3" = 1'-0"

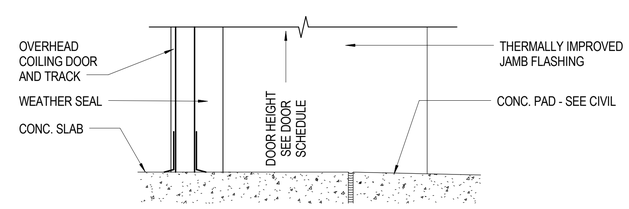

A4 DOOR SILL
SCALE: 3" = 1'-0"

GRAPHIC SCALE:
3" =1'-0"
0' 3" 6" 9"

SYM	DESCRIPTION	DATE	APPR

NAVFAC

COMMONWEALTH OF VIRGINIA
JOHN B. ANDERSON III
Lic. No. 015146
3/18/2016
ARCHITECT

Wiley|Wilson | BURNS McDONNELL
JOINT VENTURE

A/E INFO.

APPROVED
FOR COMMANDER NAVFAC / B.L.T.L.

ACTIVITY

SATISFACTORY TO DATE

DES	JBA	DRW	JBA	CHK	LTC

PROJECT MANAGER
IPT TECH. BRANCH HEAD
CHIEF ENG/ARCH

DEPARTMENT OF THE NAVY
NAVAL FACILITIES ENGINEERING COMMAND
WEBSTER FIELD, NAS PATUXENT RIVER
NAVAL FACILITIES ENGINEERING COMMAND ~ WASHINGTON
ST. INIGOES, MD
NAVAL AIR STATION PATUXENT RIVER
ST. INIGOES, MD
BUILDING 8008 REPAIRS, ALTERATIONS AND ADDITION
DOOR DETAILS

SCALE: AS NOTED
EPROJECT NO. 1183080
CONSTR. CONTR. NO. N40080-15-D-0452
NAVFAC DRAWING NO. 13078374
SHEET 90 OF 180
A-581

DRAWFORM REVISION: 10 MAY 2014

FILE NAME: C:\Revit_Projects\86314_A_Central_jbanderson@burnsmcd.com.rvt
REVDATE: 3/18/2016 9:19:07 AM

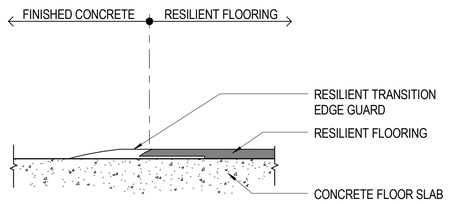

D1 FLOOR TRANSITION - RESILIENT FLOOR TO CONCRETE

SCALE: NOT TO SCALE

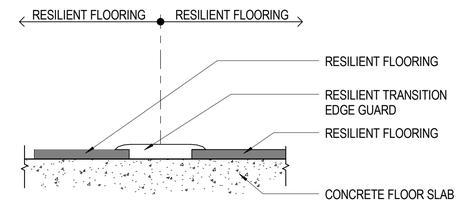

D3 FLOOR TRANSITION - RESILIENT FLOOR TO RESILIENT FLOOR

SCALE: NOT TO SCALE

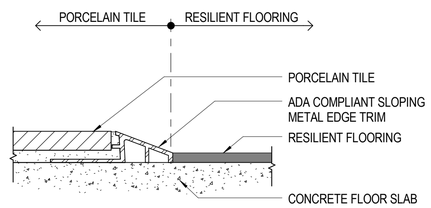

C1 FLOOR TRANSITION - RESILIENT FLOOR TO PORCELAIN TILE

SCALE: NOT TO SCALE

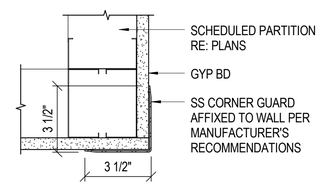

C3 CORNER GUARD - STAINLESS STEEL SURFACE MTD

SCALE: NOT TO SCALE

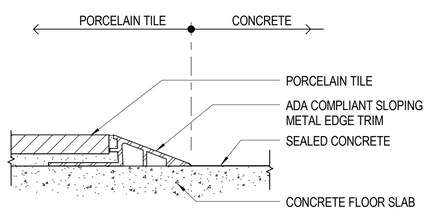

B1 FLOOR TRANSITION - PORCELAIN TILE TO CONCRETE

SCALE: NOT TO SCALE

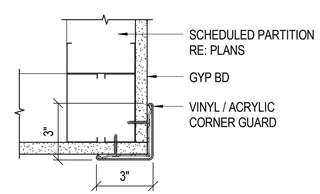

B3 CORNER GUARD - VINYL / ACRYLIC SURFACE MTD

SCALE: NOT TO SCALE

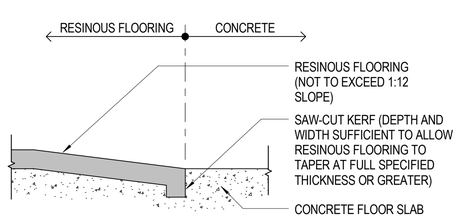

A1 FLOOR TRANSITION - RESINOUS FLOOR SLOPED TO CONCRETE

SCALE: NOT TO SCALE

SYM	DESCRIPTION	DATE	APPR

NAVFAC

COMMONWEALTH OF VIRGINIA
JOHN B. ANDERSON III
Lic. No. 015146
3/18/2016
ARCHITECT

Wiley|Wilson | BURNS McDONNELL
JOINT VENTURE

A/E INFO

APPROVED
FOR COMMANDER NAVFAC / B.L.T.L.

ACTIVITY

SATISFACTORY TO DATE

DES	MO	DRW	MO	CHK	TLF

PROJECT MANAGER
IPT TECH. BRANCH HEAD
CHIEF ENG/ARCH

DEPARTMENT OF THE NAVY
NAVAL FACILITIES ENGINEERING COMMAND
WEBSTER FIELD, NAS PATUXENT RIVER
NAVAL FACILITIES ENGINEERING COMMAND ~ WASHINGTON
ST. INIGOES, MD
NAVAL AIR STATION PATUXENT RIVER
ST. INIGOES, MD
BUILDING 8008 REPAIRS, ALTERATIONS AND ADDITION
FLOOR TRANSITION AND CORNER GUARD DETAILS

SCALE: AS NOTED
EPROJECT NO. 1183080
CONSTR. CONTR. NO. N40080-15-D-0452
NAVFAC DRAWING NO. 13078375
SHEET 91 OF 180
A-591

DRAWFORM REVISION: 10 MAY 2014

UNCLASSIFIED/ /FOR OFFICIAL USE ONLY
FILE NAME: C:\Revit_Projects\86314_A_Central_jbanderson@burnsmcd.com.rvt
REVDATE: 3/18/2016 9:19:13 AM

ROOM FINISH SCHEDULE - PHASE 1

ROOM NUMBER	ROOM NAME	FLOOR	BASE MATERIAL	BASE HEIGHT	WALLS NORTH	WALLS EAST	WALLS SOUTH	WALLS WEST	CEILING	REMARKS
MACHINE SHOP										
121	SHEET METAL	CS-1	RB-1	6"	PA-1	PA-1	PA-1	PA-1	EXP / PA-4	
122	ENGRAVING	CS-1	RB-1	6"	PA-1	PA-1	PA-1	PA-1	EXP / PA-4	
123	MATERIAL STORAGE	CS-1	RB-1	6"	PA-1	PA-1	PA-1	PA-1	EXP / PA-4	
123C	WATERJET CHILLERS	CS-1	RB-1	6"	PA-1	PA-1	PA-1	PA-1	EXP / PA-4	
124	TOOLS	CS-1	RB-1	6"	PA-1	PA-1	PA-1	PA-1	EXP / PA-4	
125	CARPENTRY	CS-1	RB-1	6"	PA-1	PA-1	PA-1	PA-1	EXP / PA-4	
125B	DUST COLLECTION	CS-1	RB-1	6"	PA-1	PA-1	PA-1	PA-1	EXP / PA-4	
135	ELECTRICAL	CS-1	RB-1	4"	PA-1	PA-1	PA-1	PA-1	EXP / PA-4	
136	JANITOR	CS-1	RB-1	4"	PE-1 / TLC-1	PE-1 / TLC-1	PE-1	PE-1	EXP / PE-2	1., 4.
137	FIRE PROTECTION	CS-1	RB-1	4"	PA-1	PA-1	PA-1	PA-1	EXP / PA-4	

ROOM FINISH SCHEDULE - PHASE 2

ROOM NUMBER	ROOM NAME	FLOOR	BASE MATERIAL	BASE HEIGHT	WALLS NORTH	WALLS EAST	WALLS SOUTH	WALLS WEST	CEILING	REMARKS
MACHINE SHOP										
101	GOVERNMENT COORDINATORS	RF-1	RB-1	4"	PA-5	PA-5	PA-2	PA-5	ACT-1	
102	SECRETARY / RECEPTION	RF-1	RB-1	4"	PA-5	PA-5	PA-2	PA-5	ACT-1	
103	CONTRACTOR LEAD	RF-1	RB-1	4"	PA-2	PA-5	PA-2	PA-5	ACT-1	
104	PICK-UP ROOM	RF-1	RB-1	4"	PA-5	PA-5	PA-5	PA-5	ACT-1	
105	PROCUREMENT	RF-1	RB-1	4"	PA-2	PA-5	PA-2	PA-5	ACT-1	
106	BRANCH HEAD	RF-1	RB-1	4"	PA-5	PA-5	PA-2	PA-5	ACT-1	
107	UNISEX BATH AND SHOWER	TLP-1	TLP-2	-	TLP-2 / TLP-3	TLP-2 / TLP-3	TLP-2 / TLP-3	TLP-2 / TLP-3	GYP / PE-2	1., 5.
108	CORRIDOR	RF-1 / RF-2	RB-1	4"	PA-5	PA-5	PA-5	PA-5	ACT-1	
108A	VESTIBULE	RF-2 / WOM-1	RB-1	4"	PA-5	PA-5	PA-5	PA-5	GYP / PA-4	1.
108B	VESTIBULE	RF-2 / WOM-1	RB-1	4"	PA-5	PA-5	PA-5	PA-5	GYP / PA-4	1.
109	CONFERENCE	RF-3	RB-1	4"	PA-5	PA-2	PA-5	PA-2	ACT-1	
110	ENGINEERING	RF-1	RB-1	4"	PA-5	PA-2	PA-5	PA-2	ACT-1	
111	DRAFTING	RF-1	RB-1	4"	PA-2	PA-5	PA-5	PA-5	ACT-1	
112	ENGINEERING ASSEMBLY AND PROTOTYPE	RF-1	RB-1	4"	PA-1	PA-1	PA-1	PA-1	ACT-1	
112A	ADDITIVE MANUFACTURING	RF-1	RB-1	4"	PA-1	PA-1	PA-1	PA-1	ACT-1	
112B	POP ROOM	RF-4	RB-1	4"	PA-1	PA-1	PA-1	PA-1	EXP / PA-4	3.
113	COPY	RF-1	RB-1	4"	PA-5	PA-5	PA-5	PA-5	ACT-1	
114	KITCHEN / BREAK	RF-1 / RF-2	RB-1	4"	PA-5	PA-5	PA-5	PA-2	ACT-1	1.
115	WOMENS	TLP-1	TLP-2	-	TLP-2 / TLP-3	TLP-2 / TLP-3	TLP-2 / TLP-3	TLP-2 / TLP-3	GYP / PE-2	1.
116	MENS	TLP-1	TLP-2	-	TLP-2 / TLP-3	TLP-2 / TLP-3	TLP-2 / TLP-3	TLP-2 / TLP-3	GYP / PE-2	1.
117	QUALITY ASSURANCE	EF-1	RB-1	4"	PA-5	PA-5	PA-5	PA-5	ACT-1	
118	FOREMAN #2 (FUTURE) / ALTERNATE SPACE	RF-1	RB-1	6"	PA-5	PA-5	PA-5	PA-5	ACT-1	
119	FOREMAN	RF-1	RB-1	4"	PA-1	PA-1	PA-1	PA-1	ACT-1	

ROOM FINISH SCHEDULE - PHASE 3

ROOM NUMBER	ROOM NAME	FLOOR	BASE MATERIAL	BASE HEIGHT	WALLS NORTH	WALLS EAST	WALLS SOUTH	WALLS WEST	CEILING	REMARKS
MACHINE SHOP										
120	MACHINING	CS-1	RB-1	6"	PA-1	PA-1	PA-1	PA-1	EXP / PA-4	
126	PAINT BOOTH AND DRYING	CS-1	RB-1	6"	PA-1	PA-1	PA-1	PA-1	EXP / PA-4	
127	CORRIDOR	CS-1	RB-1	6"	PA-1	PA-1	PA-1	PA-1	EXP / PA-4	
128	CHEMICAL TREATING	MG-1	-	-	-	-	-	-	EXP / PA-4	
129	SANDING / PREP	CS-1	RB-1	6"	PA-1	PA-1	PA-1	PA-1	EXP / PA-4	
130	SAND-BLASTING	CS-1	RB-1	6"	PA-1	PA-1	PA-1	PA-1	EXP / PA-4	
131	BREAK-DOWN AND ASSEMBLY	CS-1	RB-1	6"	PA-1	PA-1	PA-1	PA-1	EXP / PA-4	
132	COMPOSITE PREP AND FIBERGLASS	EF-1	RB-1	6"	PE-1	PE-1	PE-1	PE-1	EXP / PA-4	
132A	MATERIAL / LAYUP	CS-1	RB-1	6"	PA-1	PA-1	PA-1	PA-1	EXP / PA-4	
133	WELDING	CS-1	RB-1	6"	PA-1	PA-1	PA-1	PA-1	EXP / PA-4	
134	MENS	TLP-1	TLP-2	6"	TLP-2 / TLP-3	TLP-2 / TLP-3	TLP-2 / TLP-3	TLP-2 / TLP-3	GYP / PE-2	1.
138	COMPRESSOR	CS-1	RB-1	6"	PA-1	PA-1	PA-1	PA-1	EXP / PA-4	

REMARKS

1. MOISTURE RESISTANT GYPSUM BOARD.
2. REFER TO MISCELLANEOUS METAL SPEC FOR INFORMATION.
3. 3/4" FIRE RATED PLYWOOD ON ALL WALLS PER DIV 27 REQUIREMENTS.
4. INSTALL CERAMIC TILE TO 4'-0" AFF, TWO WALLS ADJACENT TO MOP SINK.
5. 1/4" THICK FULL HEIGHT SOLID SURFACE SHOWER WALLS, SSF-3

FINISH LEGEND

BASIS OF DESIGN OR EQUIVALENT

MATERIAL	DESCRIPTION	MANUF.	MODEL NAME/NUMBER	PRODUCT NUMBER	COLOR	REMARKS
BASE						
RB-1	WALL BASE - RUBBER	JOHNSONITE	STANDARD	-	20 CHARCOAL	
CEILINGS						
ACT-1	ACOUSTICAL CEILING TILE - 24" x 24"	USG	MARS CLIMAPLUS HIGH-NRC	86985HRC	WHITE	
EXP	EXPOSED - PAINTED	-	-	-	-	
GYP	GYPSUM BOARD	-	-	-	-	
FLOORING						
CS-1	CONCRETE - SEALED	-	-	-	-	
EF-1	EPOXY FLOORING	STONHARD	STONETEC 1/16" - UTF	-	GLACIER PEAK	
MG-1	METAL GRATE	-	-	-	-	2.
RF-1	RESILIENT FLOORING - ADMIN OFFICES, 18" X 36"	MANNINGTON	NATURE'S PATHS DISSOLVE	-	12323 RENDER	
RF-2	RESILIENT FLOORING, ADMIN OFFICES - ACCENT, 19" X 36"	MANNINGTON	NATURE'S PATHS DISSOLVE	-	12321 FADE	
RF-3	RESILIENT FLOORING - CONFERENCE ROOM, 4" X 36"	MANNINGTON	SPACIA	-	SS5W2652 SMOKED TIMBER	
RF-4	RESILIENT FLOORING - ANTI-STATIC, 12" x 12"	FLEXCO	ESD VINYL	-	WINTER WHITE	
TLP-1	PORCELAIN TILE - FIELD, 18" X 36"	IRIS US	ECOCRETE	IRG1836131	WEATHERED BLACK, HONED	
WOM-1	WALK-OFF MAT - SURFACE MOUNTED	C/S GROUP	PEDIMAT	M1 SURFACE MOUNTED TAPERED ALUMINUM FRAME	WROUGHT IRON 7325	
MISCELLANEOUS						
CG-1	CORNER GUARD - SHOP	C/S GROUP	CO SERIES	CO-8	STAINLESS STEEL	
CG-2	CORNER GUARD - ADMIN SPACE	C/S GROUP	SM SERIES	SM-20N	305 MUSHROOM	
LB-1	LOCKER BENCH - SOLID PLASTIC, 30" W X 9.5" D	BRADLEY	LENOX	-	BLUE	
LK-1	2-TIER LOCKER - SOLID PLASTIC, 12" W X 15" D	BRADLEY	LENOX	-	BLUE	
PLAM-1	PLASTIC LAMINATE - HIGH-PRESSURE	WILSONART	-	-	7965K-12 WALNUT HEIGHTS	
PTP-1	TOILET PARTITION - SOLID PLASTIC	GLOBAL	-	-	9509 BLUE	
SSF-1	SOLID SURFACE - COUNTER	CORIAN	-	-	PLATINUM	
SSF-2	SOLID SURFACE - WINDOW SILL	WILSONART	-	-	9195ML NORTHERN MELANGE	
SSF-3	SOLID SURFACE - SHOWER WALLS	CORIAN	-	-	LINEN	
WB-1	WINDOW BLINDS - ALUMINUM	HUNTER DOUGLAS	H2 MODEL H2 MODEL / H200	H200	190 BRIGHT ALUMINUM	
WALLS						
PA-1	PAINT - ACRYLIC/LATEX - SHOP FIELD	SHERWIN WILLIAMS	-	-	SW7626 ZURICH WHITE	
PA-2	PAINT - ACRYLIC/LATEX - ACCENT	SHERWIN WILLIAMS	-	-	SW6229 TEMPE STAR	
PA-3	PAINT - ACRYLIC/LATEX - TRIM	SHERWIN WILLIAMS	-	-	SW7068 GRIZZLE GRAY	
PA-4	PAINT - ACRYLIC/LATEX - CEILING	SHERWIN WILLIAMS	-	-	SW7004 SNOWBOUND	
PA-5	PAINT - ACRYLIC/LATEX - ADMIN FIELD	SHERWIN WILLIAMS	-	-	SW7043 WORDLY GRAY	
PE-1	PAINT - EPOXY - FIELD	SHERWIN WILLIAMS	-	-	SW7626 ZURICH WHITE	
PE-2	PAINT - EPOXY - CEILING	SHERWIN WILLIAMS	-	-	SW7004 SNOWBOUND	
TLC-1	CERAMIC TILE - 6" X 6"	DALTILE	-	IRS0636128	AQUA, RIGATO	
TLP-2	PORCELAIN TILE - FIELD, 18" X 36" AND 6" X 36" ACCENT	IRIS US	ECOCRETE	IRG1836128	AQUA, HONED	
TLP-3	PORCELAIN TILE - ACCENT, 6 X 36"	IRIS US	ECOCRETE	IRS0636128	AQUA, RIGATO	

GENERAL ROOM FINISH SCHEDULE NOTES:

1. REFER TO ROOM FINISH SCHEDULE FOR INTERIOR FINISH MATERIALS. BASIS OF DESIGN OR EQUIVALENT COLOR AND FINISH CODES ARE AS INDICATED.
2. REFER TO SPECIFICATIONS FOR THE BASIS OF DESIGN OR EQUIVALENT MANUFACTURER TECHNICAL REQUIREMENTS.
3. REFER TO ROOM FINISH SCHEDULE FOR FINISH ASSIGNMENTS BY LOCATION. REFER TO INTERIOR ELEVATIONS, REFLECTED CEILING DRAWINGS, FLOOR FINISH DRAWINGS, WALL FINISH DRAWINGS, ENLARGED PLAN DRAWINGS AND INTERIOR DETAIL DRAWINGS FOR ADDITIONAL FINISH PLACEMENT INFORMATION.
4. REFER TO ELECTRICAL DRAWINGS, MECHANICAL DRAWINGS, STRUCTURAL DRAWINGS AND COMMUNICATION DRAWINGS FOR COORDINATION OF BUILDING FINISHES TO BUILDING SYSTEMS.
5. REFER TO FINISH DRAWINGS FOR PLACEMENT OF FLOOR FINISHES, FLOOR PATTERNS AND FLOOR MATERIAL CHANGES.
6. REFER TO FINISH DRAWINGS AND INTERIOR ELEVATIONS FOR WALL FINISH EXTENTS, CORNER GUARD LOCATIONS, SIGNAGE, AND SPECIALTY WALL FINISH LOCATIONS.
7. REFER TO REFLECTED CEILING DRAWINGS FOR CEILING HEIGHTS AND CEILING MATERIAL EXTENTS.
8. REFER TO ENLARGED TOILET DRAWINGS, WALL FINISH PLANS AND INTERIOR ELEVATIONS FOR PLACEMENT OF INTERIOR FINISHES IN TOILET/LOCKER ROOMS.
9. REFER TO MILLWORK DETAIL DRAWINGS AND INTERIOR ELEVATIONS FOR ASSIGNMENT OF SOLID SURFACE AND PLASTIC LAMINATE FINISHES AND ADDITIONAL INFORMATION.
10. PROVIDE BLOCKING AS REQUIRED TO SECURE ALL WALL MOUNTED ITEMS INCLUDING TOILET FIXTURES, TOILET ACCESSORIES, TOILET PARTITIONS, MILLWORK, SHELVES, COUNTERTOP SUPPORTS, MARKERBOARDS, TACKBOARDS, FLAT PANEL DISPLAYS, CAMERAS, ACOUSTICAL WALL PANELS, AND ANY OTHER WALL MOUNTED OBJECT.
11. MOISTURE RESISTANT GYPSUM BOARD SHALL BE USED IN SOFFITS AND CEILINGS OF RESTROOMS, LOCKER ROOMS, SHOWERS, JANITORS CLOSETS AND OTHER WET AREAS.
12. UNLESS NOTED OTHERWISE, ALL EXPOSED STRUCTURAL STEEL IN OPEN OFFICE AREAS TO BE PAINTED PA-4.
13. UNLESS NOTED OTHERWISE, ALL EXTERIOR / PERIMETER WINDOWS TO RECEIVE PA-3.
14. ALL WINDOW SILLS TO BE SOLID SURFACE, SSF-1.
15. ALL DOOR FRAMES TO BE PA-3.
16. ALL METAL FABRICATIONS AND HANDRAILS TO BE PA-3.
17. MATCH FINISH OF COVERS FOR RETURN AIR DUCTS, VENTS AND REGISTERS IN DRYWALL CEILINGS AND WALLS TO ADJACENT SURFACES.
18. INTERIOR CAULKING TO MATCH ADJACENT WALL FINISH COLOR.
19. NO FINISHES REQUIRED ON CONCRETE WALLS OR CONCRETE CEILINGS UNLESS NOTED OTHERWISE.
20. ALL EXPOSED CONCRETE FLOORS SHALL BE SEALED.
21. WALL CORNER GUARDS TO BE INSTALLED STARTING AT THE TOP OF THE SCHEDULED WALL BASE.
22. AT GYPSUM BOARD SOFFITS AND BULKHEADS, PAINT ALL EXPOSED SURFACES.
23. PAINT ALL EXPOSED STRUCTURAL STEEL ELEMENTS, MISCELLANEOUS STEEL, PIPING, HANGERS, VALVES AND CONDUITS EXCEPT PRE-FINISHED LINER PANELS AND FOAM GENERATORS. THE PAINT COLOR SHALL BE AS INDICATED ON SCHEDULE. ALL FIRE PROTECTION PIPING COLOR SHALL BE SAFETY RED.
24. DO NOT PAINT PRE-FINISHED ITEMS, FINISHED METAL SURFACES, OPERATING PARTS, LABELS OR WARNINGS.
25. ALL JANITORS CLOSETS SHALL HAVE A MOP SINK AND WALL MOUNTED METAL MOP/BROOM HOLDER WITH UTILITY SHELF ABOVE.

SYM	DESCRIPTION	DATE	APPR

NAVFAC

COMMONWEALTH OF VIRGINIA
JOHN B. ANDERSON III
Lic. No. 015146
3/18/2016
ARCHITECT

Wiley|Wilson | BURNS McDONNELL
JOINT VENTURE

A/E INFO.

APPROVED
FOR COMMANDER NAVFAC / B.L.T.L.
ACTIVITY
SATISFACTORY TO DATE

DES	MO	DRW	MO	CHK	TLF

PROJECT MANAGER
IPT TECH. BRANCH HEAD
CHIEF ENG/ARCH

DEPARTMENT OF THE NAVY
NAVAL FACILITIES ENGINEERING COMMAND
WEBSTER FIELD, NAS PATUXENT RIVER

NAVAL FACILITIES ENGINEERING COMMAND ~ WASHINGTON
ST. INIGOES, MD

NAVAL AIR STATION PATUXENT RIVER
ST. INIGOES, MD

BUILDING 8008 REPAIRS, ALTERATIONS AND ADDITION

ROOM FINISH SCHEDULE

SCALE: AS NOTED
EPROJECT NO. 1183080
CONSTR. CONTR. NO. N40080-15-D-0452
NAVFAC DRAWING NO. 13078376
SHEET 92 OF 180
A-600

DRAWFORM REVISION: 10 MAY 2014

FILE NAME: C:\Revit_Projects\86314_A_Central_jbanderson@burnsmcd.com.rvt
REVDATE: 3/18/2016 9:19:21 AM

DOOR SCHEDULE

DOOR NUMBER	DOOR SIZE WIDTH	DOOR SIZE HEIGHT	DOOR TYPE	DOOR MATERIAL	DOOR FINISH	FRAME TYPE	FRAME MATERIAL	FRAME FINISH	ASSEMBLY RATING	STC	DETAIL HEAD	DETAIL JAMB	DETAIL SILL	HARDWARE SET	REMARKS
101	3' - 0"	7' - 0"	F	HM	PA-3	1.1	HM	PA-3	-	-	D1/A-581	B1/A-581	A1/A-581	1	
102	3' - 0"	7' - 0"	F	HM	PA-3	1.1	HM	PA-3	-	-	A1/A-581	B1/A-581	A1/A-581 SIM	1	
103	3' - 0"	7' - 0"	F	HM	PA-3	1.1	HM	PA-3	-	-	D1/A-581	B1/A-581	A1/A-581	1	
104	3' - 0"	7' - 0"	F	HM	PA-3	1.1	HM	PA-3	-	-	D1/A-581	B1/A-581	A1/A-581	1	
105	3' - 0"	7' - 0"	F	HM	PA-3	1.1	HM	PA-3	-	-	D1/A-581	B1/A-581	A1/A-581	1	
106	3' - 0"	7' - 0"	F	HM	PA-3	1.1	HM	PA-3	-	-	D1/A-581	B1/A-581	A1/A-581	1	
107	3' - 0"	7' - 0"	F	HM	PA-3	1.1	HM	PA-3	-	-	D1/A-581	B1/A-581	A1/A-581	3	PROVIDE 1" UNDERCUT ON DOOR
108	3' - 0"	7' - 0"	F	HM	PA-3	1.1	HM	PA-3	-	-	D1/A-581	B1/A-581	A1/A-581	5	
108A.E1	3' - 0"	7' - 0"	FL	AL	-	3.1	AL	PA-3	-	-	D2/A-581 SIM	B2/A-581 SIM	A2/A-581 SIM	4A	
108A.E2	3' - 0"	7' - 0"	FL	AL	-	3.1	AL	PA-3	-	-	D1/A-581 SIM	B1/A-581 SIM	A1/A-581 SIM	5	
108B.E1	3' - 0"	7' - 0"	FL	AL	-	3.1	AL	PA-3	-	-	D2/A-581 SIM	B2/A-581 SIM	A2/A-581 SIM	4A	
108B.E2	3' - 0"	7' - 0"	FL	AL	-	3.1	AL	PA-3	-	-	D1/A-581 SIM	B1/A-581 SIM	A1/A-581 SIM	5	
109	6' - 0"	7' - 0"	F	HM	PA-3	1.1	HM	PA-3	-	-	D1/A-581	B1/A-581	A1/A-581	2	DOUBLE DOOR
110	3' - 0"	7' - 0"	F	HM	PA-3	1.1	HM	PA-3	-	-	D1/A-581	B1/A-581	A1/A-581	1	
111	3' - 0"	7' - 0"	F	HM	PA-3	1.1	HM	PA-3	-	-	D1/A-581	B1/A-581	A1/A-581	1	
112	6' - 0"	7' - 0"	F	HM	PA-3	1.1	HM	PA-3	-	-	A1/A-581	B1/A-581	A1/A-581	1A	DOUBLE DOOR
112.E1	3' - 0"	7' - 0"	F-IN	HM	PA-3	1.1	HM	PA-3	-	-	D2/A-581	B2/A-581	A2/A-581	4	
112.E2	12' - 0"	8' - 0"	OH-C	ST	-		-	-	-	-	D4/A-581	B4/A-581	A4/A-581	-	
112A	6' - 0"	7' - 0"	F	HM	PA-3	1.1	HM	PA-3	-	-	D1/A-581	B1/A-581	A1/A-581	5A	DOUBLE DOOR
112B	3' - 0"	7' - 0"	F	HM	PA-3	1.1	HM	PA-3	60	-	D1/A-581	B1/A-581	A1/A-581	7A	
112B.E1	3' - 0"	7' - 0"	F-IN	HM	PA-3	1.1	HM	PA-3	-	-	D2/A-581	B2/A-581	A2/A-581	4A	
113	3' - 0"	7' - 0"	F	HM	PA-3	1.1	HM	PA-3	-	-	D1/A-581	B1/A-581	A1/A-581	5	
114	5' - 0"	7' - 0"	-	-	-	1.1	HM	PA-3	-	-	D1/A-581 SIM	B1/A-581 SIM	A1/A-581 SIM	-	CASED OPENING
115	3' - 0"	7' - 0"	F	HM	PA-3	1.1	HM	PA-3	-	-	D1/A-581	B1/A-581	A1/A-581	3	PROVIDE 1" UNDERCUT ON DOOR
116	3' - 0"	7' - 0"	F	HM	PA-3	1.1	HM	PA-3	-	-	D1/A-581	B1/A-581	A1/A-581	3	PROVIDE 1" UNDERCUT ON DOOR
117.1	6' - 0"	7' - 0"	F	HM	PA-3	1.1	HM	PA-3	-	-	D1/A-581	B1/A-581	A1/A-581	1A	DOUBLE DOOR
117.2	3' - 0"	7' - 0"	F	HM	PA-3	1.1	HM	PA-3	-	-	D1/A-581	B1/A-581	A1/A-581	1	
118.1	3' - 0"	7' - 0"	F	HM	PA-3	1.1	HM	PA-3	-	-	D1/A-581	B1/A-581	A1/A-581	1	
118.2	3' - 0"	7' - 0"	F	HM	PA-3	1.1	HM	PA-3	-	-	D1/A-581	B1/A-581	A1/A-581	1	
119	3' - 0"	7' - 0"	F	HM	PA-3	1.1	HM	PA-3	-	-	D1/A-581	B1/A-581	A1/A-581	1	
120.E1	3' - 0"	7' - 0"	F-IN	HM	PA-3	1.1	HM	PA-3	-	-	D2/A-581	B2/A-581	A2/A-581	4	
121.E1	3' - 0"	7' - 0"	F-IN	HM	PA-3	1.1	HM	PA-3	-	-	D2/A-581	B2/A-581	A2/A-581	4	
122	0' - 0"	7' - 0"	-	-	-	1.1	HM	PA-3	-	-	D1/A-581 SIM	B1/A-581 SIM	A1/A-581 SIM	-	CASED OPENING
123.E1	3' - 0"	7' - 0"	F-IN	HM	PA-3	1.1	HM	PA-3	-	-	D2/A-581	B2/A-581	A2/A-581	4	
123.E2	14' - 0"	12' - 0"	OH-C	ST	-		-	-	-	-	D4/A-581	B4/A-581	A4/A-581	-	
123C.E1	6' - 0"	7' - 0"	F-IN	HM	PA-3	1.1	HM	PA-3	-	-	D2/A-581	B2/A-581	A2/A-581	4D	DOUBLE DOOR
124.1	3' - 0"	7' - 0"	F	HM	PA-3	1.1	HM	PA-3	-	-	D1/A-581	B1/A-581	A1/A-581	5	
124.2	6' - 0"	7' - 0"	F	HM	PA-3	1.1	HM	PA-3	-	-	D1/A-581	B1/A-581	A1/A-581	5A	DOUBLE DOOR
125.2	6' - 0"	7' - 0"	F	HM	PA-3	1.1	HM	PA-3	-	-	D1/A-581	B1/A-581	A1/A-581	5A	DOUBLE DOOR
125.E1	3' - 0"	7' - 0"	F-IN	HM	PA-3	1.1	HM	PA-3	-	-	D2/A-581	B2/A-581	A2/A-581	4	
125.E2	12' - 0"	12' - 0"	OH-C	ST	-		-	-	-	-	D4/A-581	B4/A-581	A4/A-581	-	
125B.E1	6' - 0"	7' - 0"	LV	HM	PA-3	1.1	HM	PA-3	-	-	D2/A-581	B2/A-581	A2/A-581	4D	DOUBLE DOOR
126	3' - 0"	7' - 0"	F	HM	PA-3	1.1	HM	PA-3	60	-	D1/A-581	B1/A-581	A1/A-581	5C	
126.E1	3' - 0"	7' - 0"	F-IN	HM	PA-3	1.1	HM	PA-3	-	-	D2/A-581	B2/A-581	A2/A-581	4B	
126.E2	12' - 0"	12' - 0"	OH-C	ST	-		-	-	-	-	D4/A-581	B4/A-581	A4/A-581	-	
127	6' - 0"	7' - 0"	F	HM	PA-3	1.1	HM	PA-3	60	-	D1/A-581	B1/A-581	A1/A-581	5B	DOUBLE DOOR
127.E1	3' - 0"	7' - 0"	F-IN	HM	PA-3	1.1	HM	PA-3	-	-	D2/A-581	B2/A-581	A2/A-581	4B	
129	3' - 0"	7' - 0"	F	HM	PA-3	1.1	HM	PA-3	-	-	D1/A-581	B1/A-581	A1/A-581	5	
129.E2	14' - 0"	12' - 0"	OH-C	ST	-		-	-	-	-	D4/A-581	B4/A-581	A4/A-581	-	
130	3' - 0"	7' - 0"	F	HM	PA-3	1.1	HM	PA-3	-	-	D1/A-581	B1/A-581	A1/A-581	5	
130.E1	12' - 0"	12' - 0"	OH-C	ST	-		-	-	-	-	D4/A-581	B4/A-581	A4/A-581	-	
131	3' - 0"	7' - 0"	F	HM	PA-3	1.1	HM	PA-3	-	-	D1/A-581	B1/A-581	A1/A-581	5	
131.E1	16' - 0"	14' - 0"	OH-C	ST	-		-	-	-	-	D4/A-581	B4/A-581	A4/A-581	-	
132	3' - 0"	7' - 0"	F	HM	PA-3	1.1	HM	PA-3	-	-	D1/A-581	B1/A-581	A1/A-581	5	
132.E1	14' - 0"	12' - 0"	OH-C	ST	-		-	-	-	-	D4/A-581	B4/A-581	A4/A-581	-	
132A	3' - 0"	7' - 0"	F	HM	PA-3	1.1	HM	PA-3	-	-	D1/A-581	B1/A-581	A1/A-581	5	
133	6' - 0"	7' - 0"	F	HM	PA-3	1.1	HM	PA-3	-	-	D1/A-581	B1/A-581	A1/A-581	5A	DOUBLE DOOR
133.E1	12' - 0"	12' - 0"	OH-C	ST	-		-	-			D4/A-581	B4/A-581	A4/A-581	-	
134	3' - 0"	7' - 0"	F	HM	PA-3	1.1	HM	PA-3	-	-	D1/A-581	B1/A-581	A1/A-581	3	PROVIDE 1" UNDERCUT ON DOOR
135	3' - 0"	7' - 0"	F	HM	PA-3	1.1	HM	PA-3	-	-	D1/A-581	B1/A-581	A1/A-581	7	
136	3' - 0"	7' - 0"	F	HM	PA-3	1.1	HM	PA-3	-	-	D1/A-581	B1/A-581	A1/A-581	7	PROVIDE 1" UNDERCUT ON DOOR
137.E1	3' - 0"	7' - 0"	F-IN	HM	PA-3	1.1	HM	PA-3	-	-	D2/A-581	B2/A-581	A2/A-581	4	
138	3' - 0"	7' - 0"	F	HM	PA-3	1.1	HM	PA-3	-	-	D1/A-581	B1/A-581	A1/A-581	7	

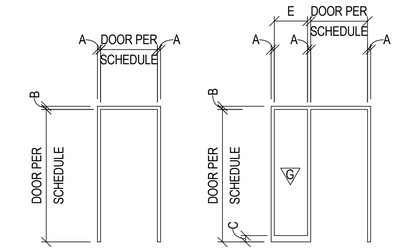

(DOOR FRAME)		
TYPE	A	B
1.1	2"	2"

(FRAME WITH SIDELITE)						
					SIDELITE	
TYPE	A	B	C	E	TYPE	G
3.1	2"	2"	4"	18"	GL	

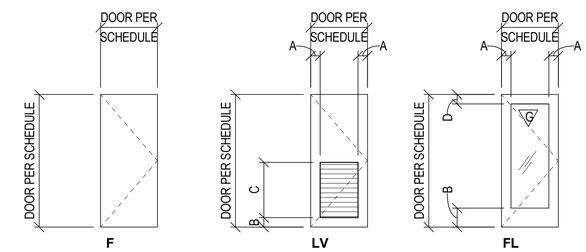

(FLUSH PANEL)	
TYPE	DESCRIPTION
LV	FLUSH PANEL INSULATED
F-IN	FLUSH PANEL INSULATED
F	FLUSH PANEL

(GLAZED ALUMINUM STOREFRONT)	
TYPE	DESCRIPTION
FL	FULL LITE PANEL INSULATED

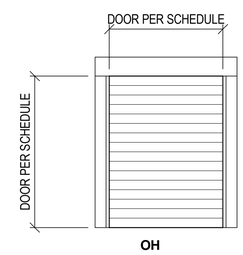

(OVERHEAD)	
TYPE	DESCRIPTION
OH-C	METAL COILING DOOR

SYM	DESCRIPTION	DATE	APPR

NAVFAC

COMMONWEALTH OF VIRGINIA
JOHN B. ANDERSON III
Lic. No. 015146
3/18/2016
ARCHITECT

Wiley|Wilson | BURNS McDONNELL
JOINT VENTURE

A/E INFO.

APPROVED

FOR COMMANDER NAVFAC / B.L.T.L.

ACTIVITY

SATISFACTORY TO DATE

DES JBA	DRW JBA	CHK LTC

PROJECT MANAGER

IPT TECH. BRANCH HEAD

CHIEF ENG/ARCH

DEPARTMENT OF THE NAVY
NAVAL FACILITIES ENGINEERING COMMAND
WEBSTER FIELD, NAS PATUXENT RIVER

NAVAL FACILITIES ENGINEERING COMMAND ~ WASHINGTON
ST. INIGOES, MD

NAVAL AIR STATION PATUXENT RIVER
ST. INIGOES, MD

BUILDING 8008 REPAIRS, ALTERATIONS AND ADDITION

DOOR SCHEDULE

SCALE: AS NOTED
EPROJECT NO. 1183080
CONSTR. CONTR. NO. N40080-15-D-0452
NAVFAC DRAWING NO. 13078377
SHEET 93 OF 180

A-601

DRAWFORM REVISION: 10 MAY 2014

FILE NAME: C:\Revit_Projects\86314_A_Central_jbanderson@burnsmcd.com.rvt
REVDATE: 3/18/2016 9:19:40 AM

WINDOW SCHEDULE								
	SIZE		HEAD HEIGHT	SILL HEIGHT	DETAIL			
TYPE	WIDTH	HEIGHT			HEAD	JAMB	SILL	REMARKS
W1	6' - 0"	4' - 0"	7' - 0"	3' - 0"	C4 / A-651	B4 / A-651	A4 / A-651	1
W2	11' - 8"	4' - 0"	11' - 8"	7' - 8"	C4 / A-651	B4 / A-651	A4 / A-651	1
W3	6' - 0"	4' - 0"	7' - 0"	3' - 0"	C3 / A-651	B3 / A-651	B3 / A-651 SIM	1
W4	9' - 0"	4' - 0"	7' - 0"	3' - 0"	C3 / A-651	B3 / A-651	B3 / A-651 SIM	1

REMARKS:

1. SILL HEIGHT BASED OFF OF ADMINSTRATIVE AREA FLOOR LEVEL = 100' - 3"

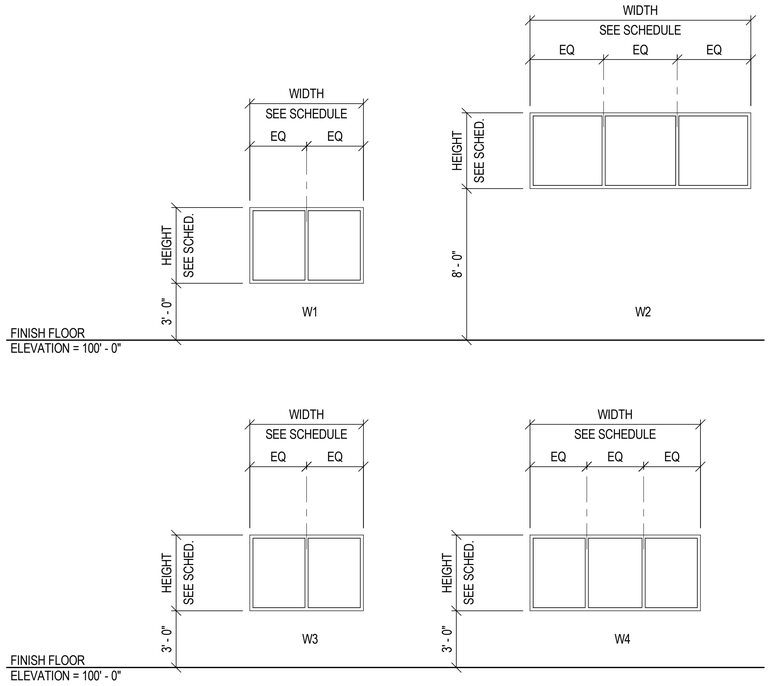

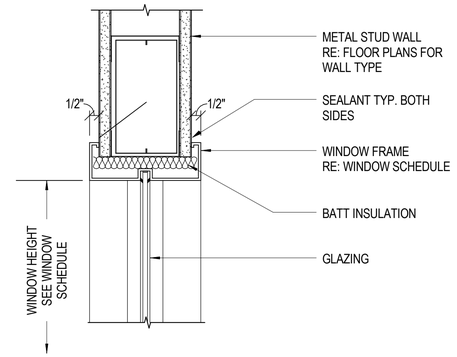

C3 HEAD DETAIL
SCALE: 3" = 1'-0"

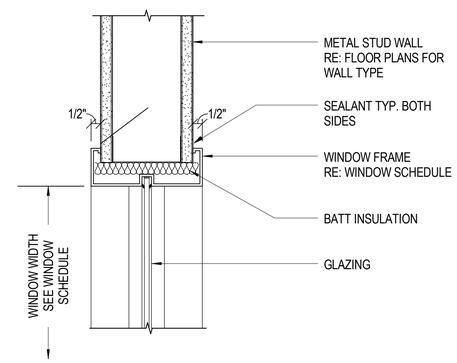

B3 JAMB DETAIL
SCALE: 3" = 1'-0"

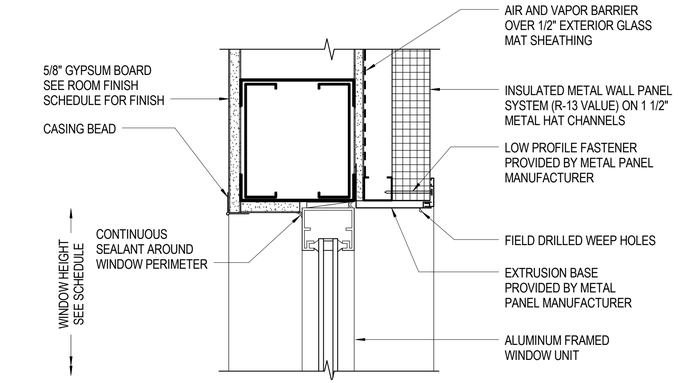

C5 HEAD DETAIL
SCALE: 3" = 1'-0"

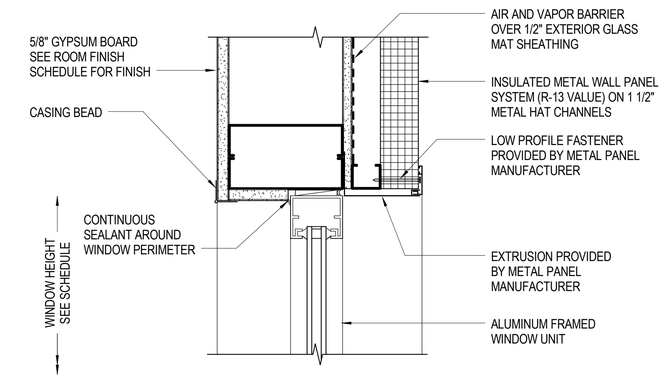

B4 JAMB DETAIL
SCALE: 3" = 1'-0"

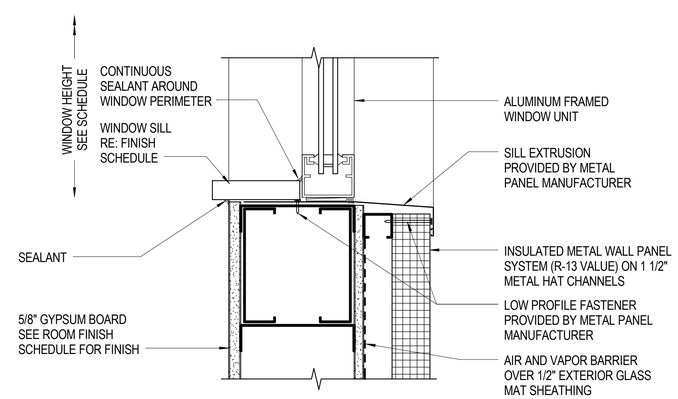

A4 SILL DETAIL
SCALE: 3" = 1'-0"

GRAPHIC SCALE:
3" =1'-0"
0' 3" 6" 9"

SYM	DESCRIPTION	DATE	APPR

NAVFAC

COMMONWEALTH OF VIRGINIA
JOHN B. ANDERSON III
Lic. No. 015146
3/18/2016
ARCHITECT

Wiley|Wilson | BURNS McDONNELL
JOINT VENTURE

A/E INFO

APPROVED
FOR COMMANDER NAVFAC / B.L.T.L.
ACTIVITY
SATISFACTORY TO DATE
DES JBA | DRW JBA | CHK LTC
PROJECT MANAGER
IPT TECH. BRANCH HEAD
CHIEF ENG/ARCH

DEPARTMENT OF THE NAVY
NAVAL FACILITIES ENGINEERING COMMAND
WEBSTER FIELD, NAS PATUXENT RIVER
NAVAL FACILITIES ENGINEERING COMMAND ~ WASHINGTON
ST. INIGOES, MD
NAVAL AIR STATION PATUXENT RIVER
ST. INIGOES, MD
BUILDING 8008 REPAIRS, ALTERATIONS AND ADDITION
WINDOW SCHEDULE , WINDOW TYPES, AND WINDOW DETAILS

SCALE: AS NOTED
EPROJECT NO. 1183080
CONSTR. CONTR. NO. N40080-15-D-0452
NAVFAC DRAWING NO. 13078378
SHEET 94 OF 180
A-651

DRAWFORM REVISION: 10 MAY 2014

FILE NAME: C:\Revit_Projects\86314_A_Central_jbanderson@burnsmcd.com.rvt
REV/DATE: 3/18/2016 9:19:48 AM

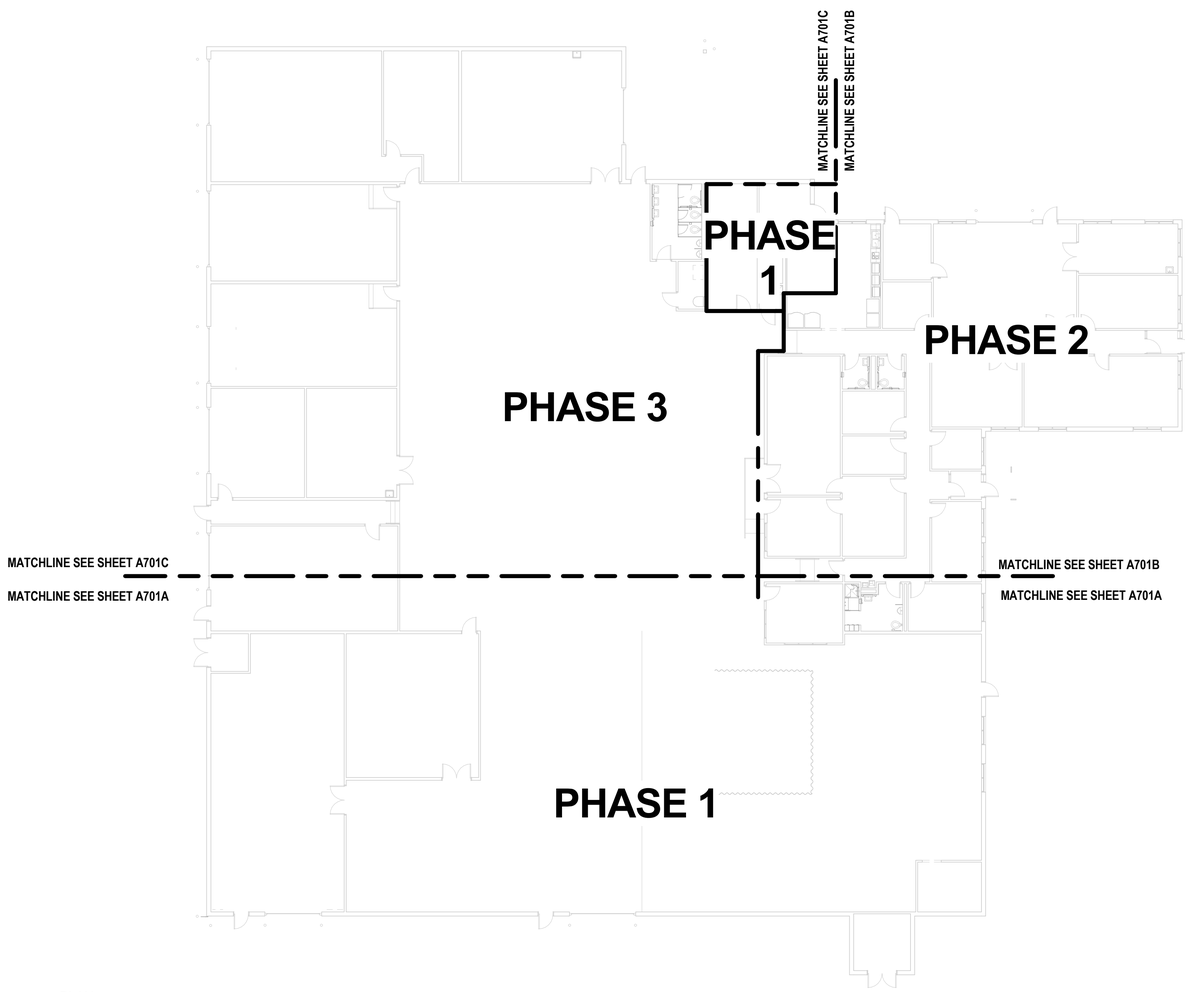

PLAN NORTH

OVERALL SIGNAGE AND FINISH FLOOR PLAN

SCALE: 1/16" = 1'-0"

GENERAL SIGNAGE PLACEMENT PLAN NOTES:

1. REFER TO SIGNAGE SCHEDULE GENERAL NOTES, SHEET A-711.
2. REFER TO SIGNAGE SCHEDULE AND DETAIL DRAWINGS FOR ADDITIONAL INFORMATION, SHEET A-711.
3. REFER TO SIGNAGE SCHEDULE FOR SIGN LOCATION TAG, DOOR LOCATION, SIGN TYPE, SIGN TEXT NUMBER, AND PLACEHOLDER MESSAGE TEXT, SHEET A-711.
4. REFER TO SIGNAGE MOUNTING HEIGHTS ON SIGNAGE DETAIL DRAWINGS. SIGNS TO BE WALL-MOUNTED ON THE LATCH SIDE OF DOOR OR AS INDICATED. HEIGHTS, CLEARANCES, AND CONFIGURATIONS SHOWN ARE TYPICAL AND SHALL APPLY IN ALL INSTANCES UNLESS NOTED OTHERWISE.
5. EXTERIOR AND INTERIOR SIGNAGE SHALL COMPLY WITH UFG REQUIREMENTS.

GENERAL FINISH PLAN NOTES:

1. REFER TO ROOM FINISH SCHEDULE GENERAL NOTES.
2. REFER TO ROOM FINISH SCHEDULE FOR FLOOR FINISHES NOT INDICATED ON PLANS.
3. REFER TO SPECIFICATION DIVISION 9 FLOORING AND DIVISION 12 FURNISHINGS FOR FLOORING MATERIAL INSTALLATION REQUIREMENTS, COORDINATION OF FLOORING ACCESSORIES AND TRANSITION STRIPS BETWEEN DIFFERENT FLOOR CONDITIONS. PROVIDE THRESHOLDS PER SPECIFICATIONS AND DRAWINGS.
4. WHERE TWO OR MORE PAINTED FINISHES OCCUR ON THE SAME WALL FACE OR CEILING SURFACE, A PAINT TRANSITION REVEAL IS TO BE PROVIDED.
5. FOR FLOORING MATERIAL TRANSITIONS WHICH OCCUR AT DOORWAYS, TERMINATE FINISH TRANSITION AND TRANSITION STRIP UNDER THE DOOR AT THE DOOR STOP OR CENTER UNDER THE CLOSED DOOR.
6. CENTER ALL FLOOR TILE SO THAT PERIMETER CUTS ARE EQUAL UNLESS NOTED OTHERWISE.
7. PROVIDE COVE BULLNOSE, DOUBLE BULLNOSE AND BULLNOSE AT ALL OUTSIDE TILE CORNERS AND WHERE TILE TERMINATES FOR A CLEAN FINISH.

KEY PLAN:

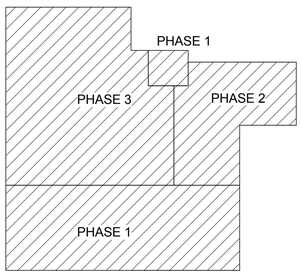

GRAPHIC SCALE:

1/16" =1'-0" 0' 8' 16' 32'

SYM	DESCRIPTION	DATE	APPR

NAVFAC

COMMONWEALTH OF VIRGINIA
JOHN B. ANDERSON III
Lic. No. 015146
3/18/2016
ARCHITECT

Wiley|Wilson | BURNS McDONNELL
JOINT VENTURE

A/E INFO.

APPROVED
FOR COMMANDER NAVFAC / B.L.T.L.

ACTIVITY

SATISFACTORY TO DATE

DES MO	DRW MO	CHK TLF

PROJECT MANAGER
IPT TECH. BRANCH HEAD
CHIEF ENG/ARCH

DEPARTMENT OF THE NAVY
NAVAL FACILITIES ENGINEERING COMMAND
WEBSTER FIELD, NAS PATUXENT RIVER
NAVAL FACILITIES ENGINEERING COMMAND ~ WASHINGTON
ST. INIGOES, MD
NAVAL AIR STATION PATUXENT RIVER
ST. INIGOES, MD
BUILDING 8008 REPAIRS, ALTERATIONS AND ADDITION
OVERALL SIGNAGE AND FINISH PLANS

SCALE: AS NOTED
EPROJECT NO. 1183080
CONSTR. CONTR. NO. N40080-15-D-0452
NAVFAC DRAWING NO. 13078379
SHEET 95 OF 180
A-701

DRAWFORM REVISION: 10 MAY 2014

FILE NAME: C:\Revit_Projects\86314_A_Central_jbanderson@burnsmcd.com.rvt
REVDATE: 3/18/2016 9:19:56 AM

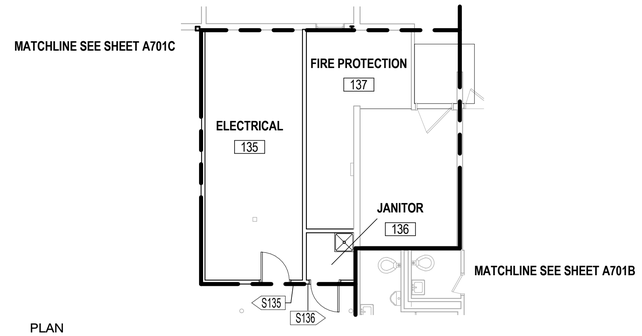

PLAN NORTH

SIGNAGE AND FINISH PLAN - PHASE 1

SCALE: 1/8" = 1'-0"

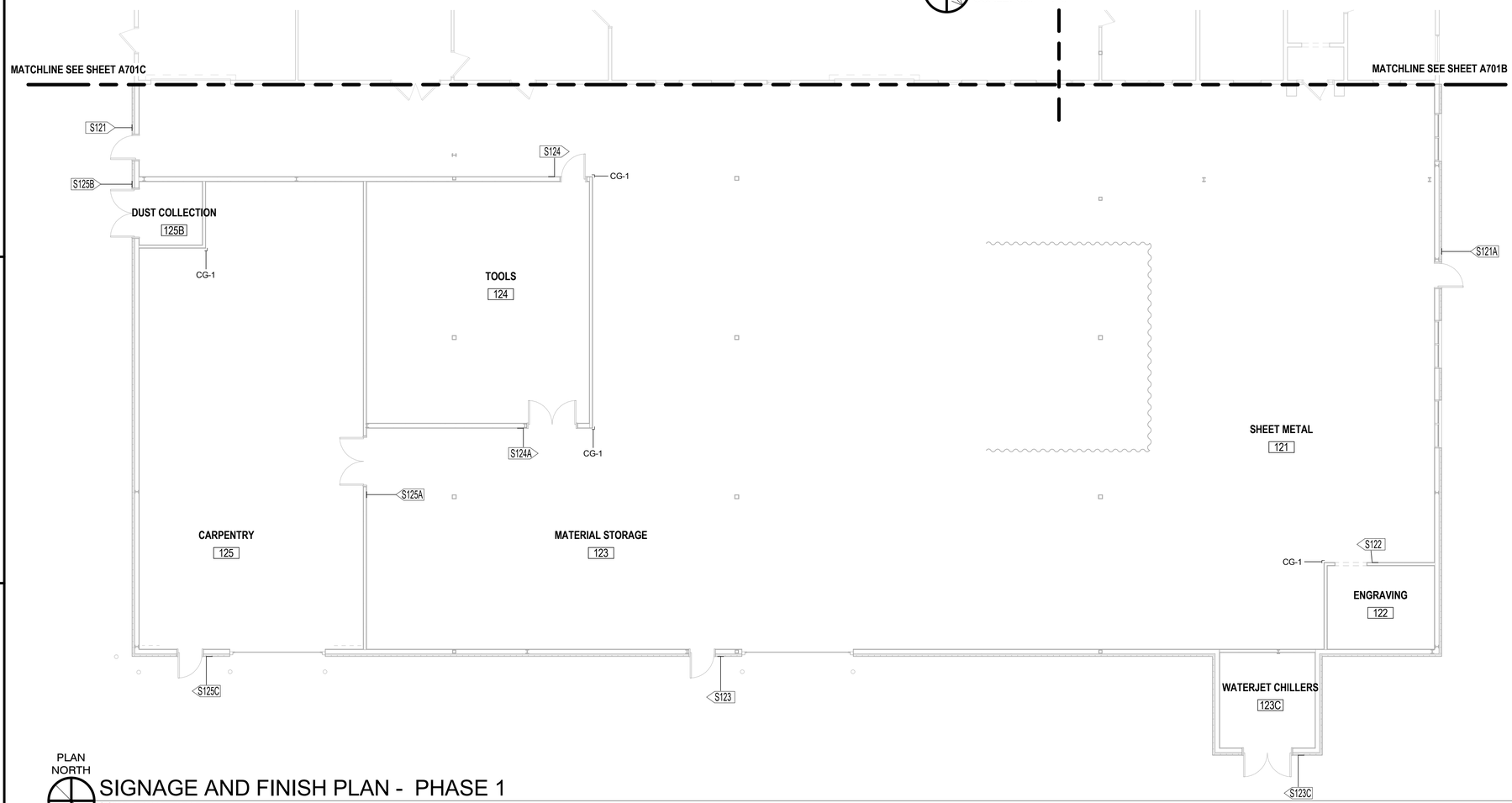

PLAN NORTH

SIGNAGE AND FINISH PLAN - PHASE 1

SCALE: 1/8" = 1'-0"

GENERAL SIGNAGE PLACEMENT PLAN NOTES:

1. REFER TO SIGNAGE SCHEDULE GENERAL NOTES, SHEET A-711.
2. REFER TO SIGNAGE SCHEDULE AND DETAIL DRAWINGS FOR ADDITIONAL INFORMATION, SHEET A-711.
3. REFER TO SIGNAGE SCHEDULE FOR SIGN LOCATION TAG, DOOR LOCATION, SIGN TYPE, SIGN TEXT NUMBER, AND PLACEHOLDER MESSAGE TEXT, SHEET A-711.
4. REFER TO SIGNAGE MOUNTING HEIGHTS ON SIGNAGE DETAIL DRAWINGS. SIGNS TO BE WALL-MOUNTED ON THE LATCH SIDE OF DOOR OR AS INDICATED. HEIGHTS, CLEARANCES, AND CONFIGURATIONS SHOWN ARE TYPICAL AND SHALL APPLY IN ALL INSTANCES UNLESS NOTED OTHERWISE.
5. EXTERIOR AND INTERIOR SIGNAGE SHALL COMPLY WITH UFG REQUIREMENTS.

GENERAL FINISH PLAN NOTES:

1. REFER TO ROOM FINISH SCHEDULE GENERAL NOTES.
2. REFER TO ROOM FINISH SCHEDULE FOR FLOOR FINISHES NOT INDICATED ON PLANS.
3. REFER TO SPECIFICATION DIVISION 9 FLOORING AND DIVISION 12 FURNISHINGS FOR FLOORING MATERIAL INSTALLATION REQUIREMENTS, COORDINATION OF FLOORING ACCESSORIES AND TRANSITION STRIPS BETWEEN DIFFERENT FLOOR CONDITIONS. PROVIDE THRESHOLDS PER SPECIFICATIONS AND DRAWINGS.
4. WHERE TWO OR MORE PAINTED FINISHES OCCUR ON THE SAME WALL FACE OR CEILING SURFACE, A PAINT TRANSITION REVEAL IS TO BE PROVIDED.
5. FOR FLOORING MATERIAL TRANSITIONS WHICH OCCUR AT DOORWAYS, TERMINATE FINISH TRANSITION AND TRANSITION STRIP UNDER THE DOOR AT THE DOOR STOP OR CENTER UNDER THE CLOSED DOOR.
6. CENTER ALL FLOOR TILE SO THAT PERIMETER CUTS ARE EQUAL UNLESS NOTED OTHERWISE.
7. PROVIDE COVE BULLNOSE, DOUBLE BULLNOSE AND BULLNOSE AT ALL OUTSIDE TILE CORNERS AND WHERE TILE TERMINATES FOR A CLEAN FINISH.

KEY PLAN:

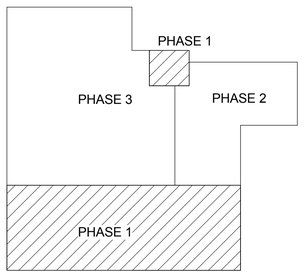

GRAPHIC SCALE:

1/16" =1'-0" 0' 8' 16' 32'

SYM	DESCRIPTION	DATE	APPR

NAVFAC

COMMONWEALTH OF VIRGINIA
JOHN B. ANDERSON III
Lic. No. 015146
3/18/2016
ARCHITECT

Wiley|Wilson | BURNS McDONNELL
JOINT VENTURE

A/E INFO

APPROVED
FOR COMMANDER NAVFAC / B.L.T.L.

ACTIVITY

SATISFACTORY TO DATE

DES. MO	DRW MO	CHK TLF

PROJECT MANAGER
IPT TECH. BRANCH HEAD
CHIEF ENG/ARCH

DEPARTMENT OF THE NAVY
NAVAL FACILITIES ENGINEERING COMMAND
WEBSTER FIELD, NAS PATUXENT RIVER
NAVAL FACILITIES ENGINEERING COMMAND ~ WASHINGTON
ST. INIGOES, MD
NAVAL AIR STATION PATUXENT RIVER
ST. INIGOES, MD
BUILDING 8008 REPAIRS, ALTERATIONS AND ADDITION
SIGNAGE AND FINISH PLANS - PHASE 1

SCALE: AS NOTED
EPROJECT NO. 1183080
CONSTR. CONTR. NO. N40080-15-D-0452
NAVFAC DRAWING NO. 13078380
SHEET 96 OF 180

A-701A

DRAWFORM REVISION: 10 MAY 2014

FILE NAME: C:\Revit_Projects\86314_A_Central_jbanderson@burnsmcd.com.rvt
REV/DATE: 3/18/2016 9:20:02 AM

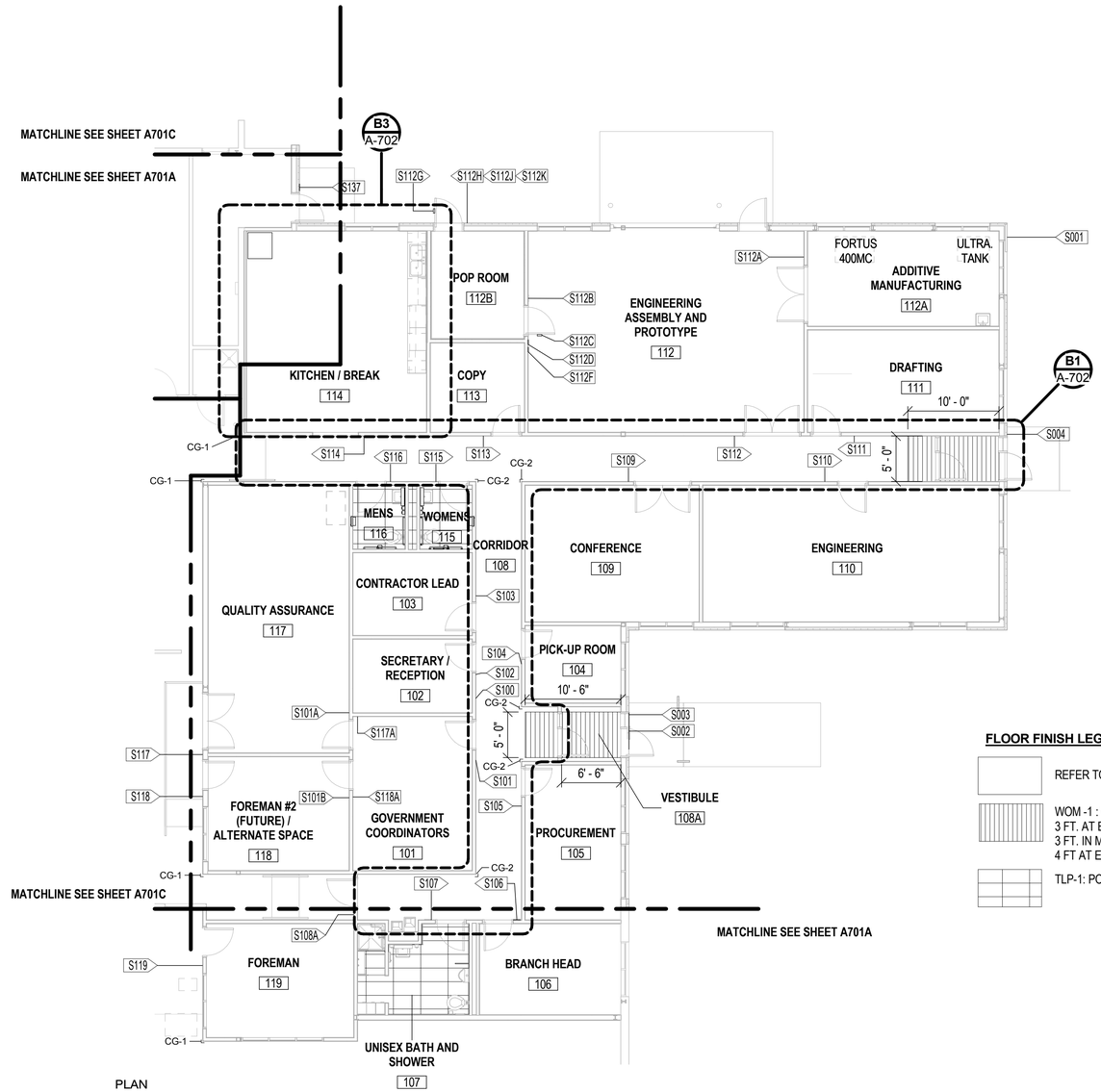

SIGNAGE AND FINISH PLAN - PHASE 2

SCALE: 1/8" = 1'-0"

FLOOR FINISH LEGEND:

- REFER TO FINISH SCHEDULE FOR MATERIAL
- WOM -1 : WALK-OFF MAT - SURFACE MOUNTED. 3 FT. AT ENTRANCE - SCRAPER SURFACE 3 FT. IN MIDDLE - ABSORPTION SURFACE 4 FT AT END - FINISHING SURFACE
- TLP-1: PORCELAIN TILE - FIELD, 18" X 36"

GENERAL SIGNAGE PLACEMENT PLAN NOTES:

1. REFER TO SIGNAGE SCHEDULE GENERAL NOTES, SHEET A-711.
2. REFER TO SIGNAGE SCHEDULE AND DETAIL DRAWINGS FOR ADDITIONAL INFORMATION, SHEET A-711.
3. REFER TO SIGNAGE SCHEDULE FOR SIGN LOCATION TAG, DOOR LOCATION, SIGN TYPE, SIGN TEXT NUMBER, AND PLACEHOLDER MESSAGE TEXT, SHEET A-711.
4. REFER TO SIGNAGE MOUNTING HEIGHTS ON SIGNAGE DETAIL DRAWINGS. SIGNS TO BE WALL-MOUNTED ON THE LATCH SIDE OF DOOR OR AS INDICATED. HEIGHTS, CLEARANCES, AND CONFIGURATIONS SHOWN ARE TYPICAL AND SHALL APPLY IN ALL INSTANCES UNLESS NOTED OTHERWISE.
5. EXTERIOR AND INTERIOR SIGNAGE SHALL COMPLY WITH UFG REQUIREMENTS.

GENERAL FINISH PLAN NOTES:

1. REFER TO ROOM FINISH SCHEDULE GENERAL NOTES.
2. REFER TO ROOM FINISH SCHEDULE FOR FLOOR FINISHES NOT INDICATED ON PLANS.
3. REFER TO SPECIFICATION DIVISION 9 FLOORING AND DIVISION 12 FURNISHINGS FOR FLOORING MATERIAL INSTALLATION REQUIREMENTS, COORDINATION OF FLOORING ACCESSORIES AND TRANSITION STRIPS BETWEEN DIFFERENT FLOOR CONDITIONS. PROVIDE THRESHOLDS PER SPECIFICATIONS AND DRAWINGS.
4. WHERE TWO OR MORE PAINTED FINISHES OCCUR ON THE SAME WALL FACE OR CEILING SURFACE, A PAINT TRANSITION REVEAL IS TO BE PROVIDED.
5. FOR FLOORING MATERIAL TRANSITIONS WHICH OCCUR AT DOORWAYS, TERMINATE FINISH TRANSITION AND TRANSITION STRIP UNDER THE DOOR AT THE DOOR STOP OR CENTER UNDER THE CLOSED DOOR.
6. CENTER ALL FLOOR TILE SO THAT PERIMETER CUTS ARE EQUAL UNLESS NOTED OTHERWISE.
7. PROVIDE COVE BULLNOSE, DOUBLE BULLNOSE AND BULLNOSE AT ALL OUTSIDE TILE CORNERS AND WHERE TILE TERMINATES FOR A CLEAN FINISH.

KEY PLAN:

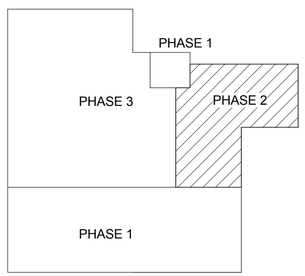

GRAPHIC SCALE:

1/8" =1'-0" 0' 4' 8' 16'

SYM	DESCRIPTION	DATE	APPR

NAVFAC

COMMONWEALTH OF VIRGINIA
JOHN B. ANDERSON III
Lic. No. 015146
3/18/2016
ARCHITECT

Wiley|Wilson | BURNS McDONNELL
JOINT VENTURE

A/E INFO

APPROVED
FOR COMMANDER NAVFAC / B.L.T.L.

ACTIVITY

SATISFACTORY TO DATE

DES	MO	DRW	MO	CHK	TLF

PROJECT MANAGER
IPT TECH. BRANCH HEAD
CHIEF ENG/ARCH

DEPARTMENT OF THE NAVY
NAVAL FACILITIES ENGINEERING COMMAND
WEBSTER FIELD, NAS PATUXENT RIVER
NAVAL FACILITIES ENGINEERING COMMAND ~ WASHINGTON
ST. INIGOES, MD
NAVAL AIR STATION PATUXENT RIVER
ST. INIGOES, MD

BUILDING 8008 REPAIRS, ALTERATIONS AND ADDITION

SIGNAGE AND FINISH PLANS - PHASE 2

SCALE: AS NOTED
EPROJECT NO. 1183080
CONSTR. CONTR. NO. N40080-15-D-0452
NAVFAC DRAWING NO. 13078381
SHEET 97 OF 180
A-701B

DRAWFORM REVISION: 10 MAY 2014

FILE NAME: C:\Revit_Projects\86314_A_Central_jbanderson@burnsmcd.com.rvt
REVDATE: 3/18/2016 9:20:10 AM

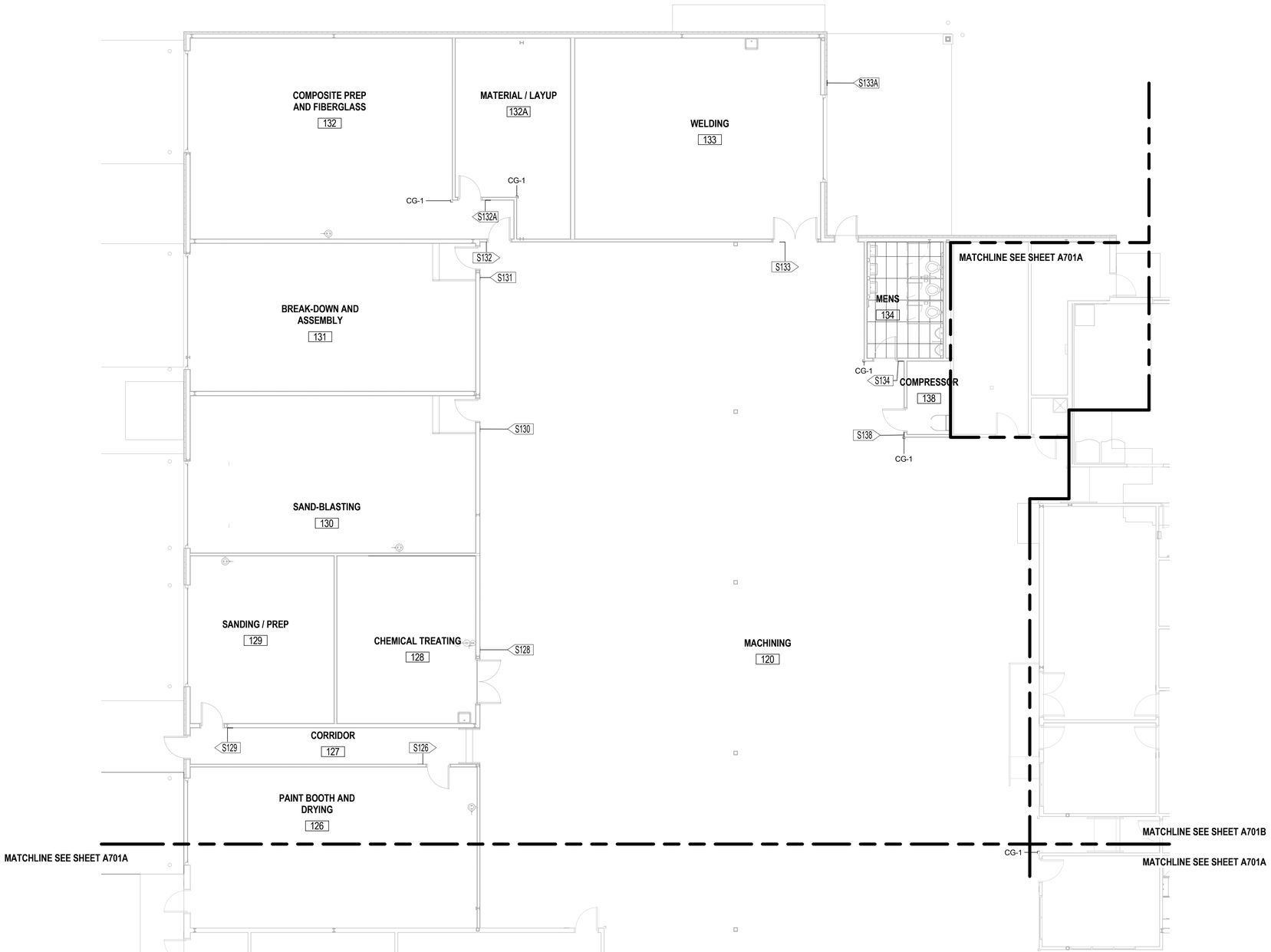

PLAN NORTH

SIGNAGE AND FINISH PLAN - PHASE 3

SCALE: 1/8" = 1'-0"

GENERAL SIGNAGE PLACEMENT PLAN NOTES:

1. REFER TO SIGNAGE SCHEDULE GENERAL NOTES, SHEET A-711.
2. REFER TO SIGNAGE SCHEDULE AND DETAIL DRAWINGS FOR ADDITIONAL INFORMATION, SHEET A-711.
3. REFER TO SIGNAGE SCHEDULE FOR SIGN LOCATION TAG, DOOR LOCATION, SIGN TYPE, SIGN TEXT NUMBER, AND PLACEHOLDER MESSAGE TEXT, SHEET A-711.
4. REFER TO SIGNAGE MOUNTING HEIGHTS ON SIGNAGE DETAIL DRAWINGS. SIGNS TO BE WALL-MOUNTED ON THE LATCH SIDE OF DOOR OR AS INDICATED. HEIGHTS, CLEARANCES, AND CONFIGURATIONS SHOWN ARE TYPICAL AND SHALL APPLY IN ALL INSTANCES UNLESS NOTED OTHERWISE.
5. EXTERIOR AND INTERIOR SIGNAGE SHALL COMPLY WITH UFG REQUIREMENTS.

GENERAL FINISH PLAN NOTES:

1. REFER TO ROOM FINISH SCHEDULE GENERAL NOTES.
2. REFER TO ROOM FINISH SCHEDULE FOR FLOOR FINISHES NOT INDICATED ON PLANS.
3. REFER TO SPECIFICATION DIVISION 9 FLOORING AND DIVISION 12 FURNISHINGS FOR FLOORING MATERIAL INSTALLATION REQUIREMENTS, COORDINATION OF FLOORING ACCESSORIES AND TRANSITION STRIPS BETWEEN DIFFERENT FLOOR CONDITIONS. PROVIDE THRESHOLDS PER SPECIFICATIONS AND DRAWINGS.
4. WHERE TWO OR MORE PAINTED FINISHES OCCUR ON THE SAME WALL FACE OR CEILING SURFACE, A PAINT TRANSITION REVEAL IS TO BE PROVIDED.
5. FOR FLOORING MATERIAL TRANSITIONS WHICH OCCUR AT DOORWAYS, TERMINATE FINISH TRANSITION AND TRANSITION STRIP UNDER THE DOOR AT THE DOOR STOP OR CENTER UNDER THE CLOSED DOOR.
6. CENTER ALL FLOOR TILE SO THAT PERIMETER CUTS ARE EQUAL UNLESS NOTED OTHERWISE.
7. PROVIDE COVE BULLNOSE, DOUBLE BULLNOSE AND BULLNOSE AT ALL OUTSIDE TILE CORNERS AND WHERE TILE TERMINATES FOR A CLEAN FINISH.

KEY PLAN:

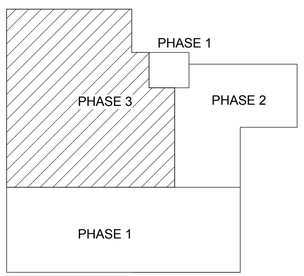

GRAPHIC SCALE:

1/8" =1'-0" 0' 4' 8' 16'

SYM	DESCRIPTION	DATE	APPR

NAVFAC

COMMONWEALTH OF VIRGINIA
JOHN B. ANDERSON III
Lic. No. 015146
3/18/2016
ARCHITECT

Wiley|Wilson | BURNS McDONNELL
JOINT VENTURE

A/E INFO.

APPROVED
FOR COMMANDER NAVFAC / B.L.T.L.

ACTIVITY

SATISFACTORY TO DATE

DES MO	DRW MO	CHK TLF

PROJECT MANAGER
IPT TECH. BRANCH HEAD
CHIEF ENG/ARCH

DEPARTMENT OF THE NAVY
NAVAL FACILITIES ENGINEERING COMMAND
WEBSTER FIELD, NAS PATUXENT RIVER
NAVAL FACILITIES ENGINEERING COMMAND ~ WASHINGTON
ST. INIGOES, MD
NAVAL AIR STATION PATUXENT RIVER
ST. INIGOES, MD
BUILDING 8008 REPAIRS, ALTERATIONS AND ADDITION
SIGNAGE AND FINISH PLANS - PHASE 3

SCALE: AS NOTED
EPROJECT NO. 1183080
CONSTR. CONTR. NO. N40080-15-D-0452
NAVFAC DRAWING NO. 13078382
SHEET 98 OF 180
A-701C

DRAWFORM REVISION: 10 MAY 2014

FILE NAME: C:\Revit_Projects\86314_A_Central_jbanderson@burnsmcd.com.rvt
REVDATE: 3/18/2016 9:20:17 AM

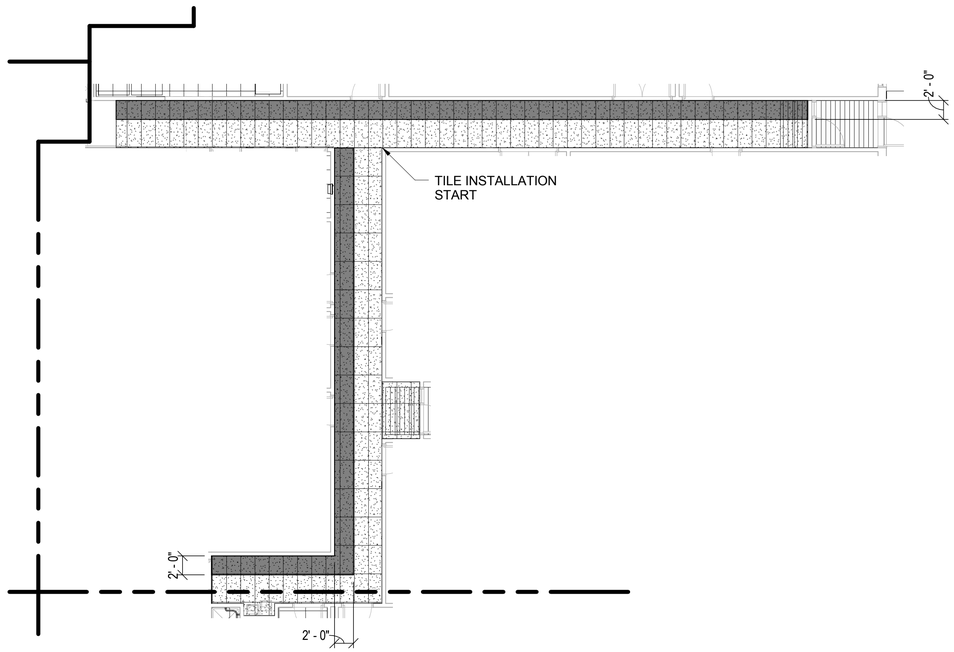

LEVEL 1 - PHASE 2 - ENLARGED ADMIN CORRIDOR FLOOR PATTERN

B1 / A-702 SCALE: 1/8" = 1'-0"

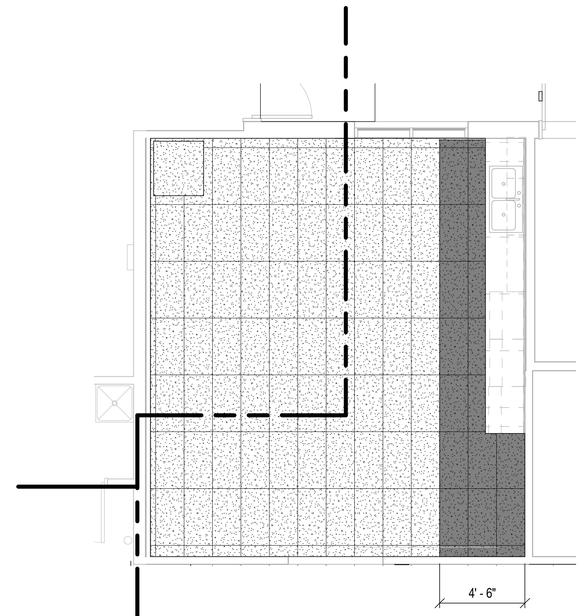

LEVEL 1 - PHASE 2 - ENLARGED BREAK ROOM FLOOR PATTERN

B3 / A-702 SCALE: 1/4" = 1'-0"

GENERAL FINISH PLAN NOTES:

1. REFER TO ROOM FINISH SCHEDULE GENERAL NOTES.
2. REFER TO ROOM FINISH SCHEDULE FOR FLOOR FINISHES NOT INDICATED ON PLANS.
3. REFER TO SPECIFICATION DIVISION 9 FLOORING AND DIVISION 12 FURNISHINGS FOR FLOORING MATERIAL INSTALLATION REQUIREMENTS, COORDINATION OF FLOORING ACCESSORIES AND TRANSITION STRIPS BETWEEN DIFFERENT FLOOR CONDITIONS. PROVIDE THRESHOLDS PER SPECIFICATIONS AND DRAWINGS.
4. WHERE TWO OR MORE PAINTED FINISHES OCCUR ON THE SAME WALL FACE OR CEILING SURFACE, A PAINT TRANSITION REVEAL IS TO BE PROVIDED.
5. FOR FLOORING MATERIAL TRANSITIONS WHICH OCCUR AT DOORWAYS, TERMINATE FINISH TRANSITION AND TRANSITION STRIP UNDER THE DOOR AT THE DOOR STOP OR CENTER UNDER THE CLOSED DOOR.
6. CENTER ALL FLOOR TILE SO THAT PERIMETER CUTS ARE EQUAL UNLESS NOTED OTHERWISE.
7. PROVIDE COVE BULLNOSE, DOUBLE BULLNOSE AND BULLNOSE AT ALL OUTSIDE TILE CORNERS AND WHERE TILE TERMINATES FOR A CLEAN FINISH.

FLOOR FINISH LEGEND:

- REFER TO FINISH SCHEDULE FOR MATERIAL
- RF-1: RESILIENT FLOORING - ADMIN OFFICES, 18" X 36"
- RF-2: RESILIENT FLOORING - ADMIN OFFICES - ACCENT, 18" X 36"
- WOM -1 : WALK-OFF MAT - SURFACE MOUNTED

GRAPHIC SCALE:

1/4" =1'-0" 0' 2' 4' 8'

SYM	DESCRIPTION	DATE	APPR

NAVFAC

COMMONWEALTH OF VIRGINIA
JOHN B. ANDERSON III
Lic. No. 015146
3/18/2016
ARCHITECT

Wiley|Wilson | BURNS McDONNELL
JOINT VENTURE

A/E INFO

APPROVED
FOR COMMANDER NAVFAC / B.L.T.L.

ACTIVITY

SATISFACTORY TO DATE

DES	MO	DRW	MO	CHK	TLF

PROJECT MANAGER
IPT TECH. BRANCH HEAD
CHIEF ENG/ARCH

DEPARTMENT OF THE NAVY
NAVAL FACILITIES ENGINEERING COMMAND
WEBSTER FIELD, NAS PATUXENT RIVER
NAVAL FACILITIES ENGINEERING COMMAND ~ WASHINGTON
ST. INIGOES, MD
NAVAL AIR STATION PATUXENT RIVER
ST. INIGOES, MD

BUILDING 8008 REPAIRS, ALTERATIONS AND ADDITION

ENLARGED FLOOR FINISH PLAN

SCALE: AS NOTED
EPROJECT NO. 1183080
CONSTR. CONTR. NO. N40080-15-D-0452
NAVFAC DRAWING NO. 13078383
SHEET 99 OF 180
A-702

DRAWFORM REVISION: 10 MAY 2014

FILE NAME: C:\Revit_Projects\86314_A_Central_jbanderson@burnsmcd.com.rvt
REVDATE: 3/18/2016 9:20:25 AM

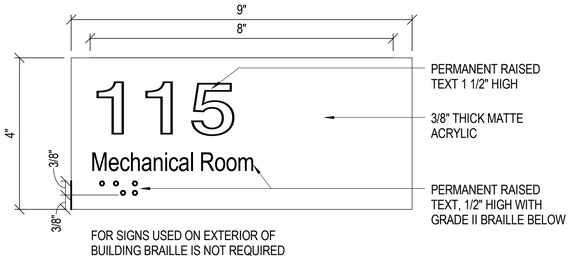

SIGN TYPE A - PERMANENT ROOM IDENTIFICATION

SCALE: NOT TO SCALE

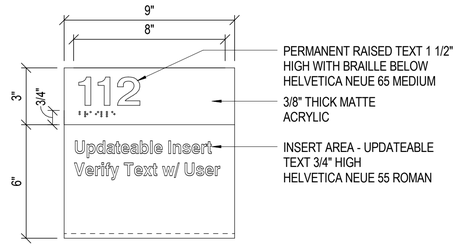

SIGN TYPE B - ROOM IDENTIFICATION SIGN

SCALE: NOT TO SCALE

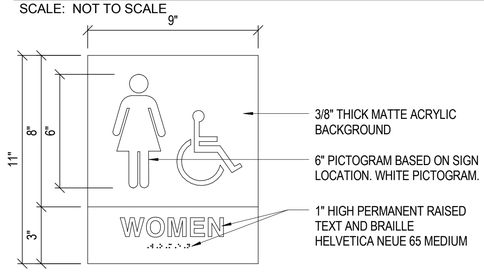

SIGN TYPE C - RESTROOM ACCESSIBLE - NO RM NUMBER

SCALE: NOT TO SCALE

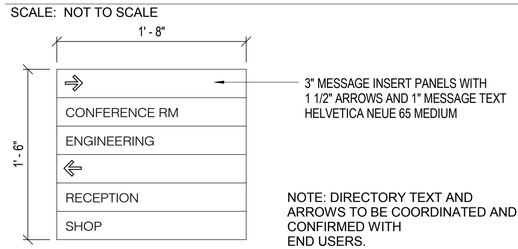

SIGN TYPE D - INTERIOR WALL-MOUNTED DIRECTIONAL SIGN - MEDIUM

SCALE: NOT TO SCALE

SIGN TYPE E - INSTRUCTIONAL SIGNAGE

SCALE: NOT TO SCALE

SIGNAGE SCHEDULE

SIGN TAG	SIGN TYPE	MESSAGE TEXT NUMBER	MESSAGE TEXT WORDING	REMARKS
S001	G		8008	2.
S002	H		XXXXX	3.
S003	F		(PICTOGRAM) NO SMOKING WITHIN 25' OF BUILDING	1.
S004	F		(PICTOGRAM) NO SMOKING WITHIN 25' OF BUILDING	1.
S100	D		REFERENCE SIGN TYPE	4.
S101	B		GOVERNMENT COORDINATORS	
S101A	B		GOVERNMENT COORDINATORS	
S101B	B		GOVERNMENT COORDINATORS	
S102	B		SECRETARY	
S103	B		CONTRACTOR LEAD	
S104	A		PICK-UP ROOM	
S105	B		PROCUREMENT	
S106	B		BRANCH HEAD	
S107	C		(PICTOGRAM) UNISEX	
S108A	A		ADMIN SPACE	
S109	A		CONFERENCE ROOM	
S110	B		ENGINEERING	
S111	B		DRAFTING	
S112	B		ENGINEERING ASSEMBLY AND PROTOTYPE	
S112A	B		ADDITIVE MANUFACTURING	
S112B	A		POP ROOM	

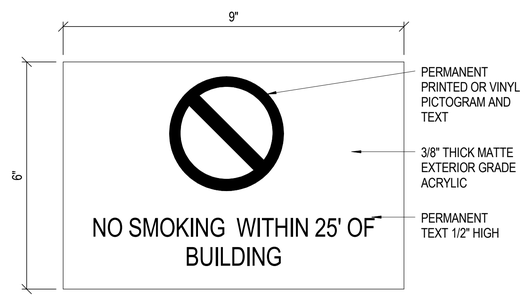

SIGN TYPE F - EXTERIOR NO SMOKING

SCALE: NOT TO SCALE

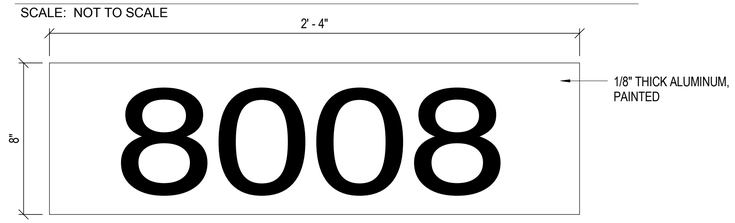

SIGN TYPE G - EXTERIOR ADDRESS

SCALE: NOT TO SCALE

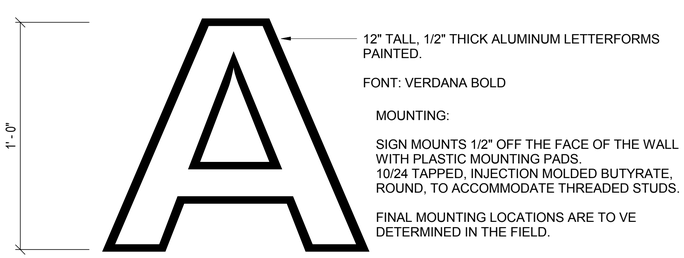

SIGN TYPE H - EXTERIOR LETTERFORM

SCALE: NOT TO SCALE

SIGNAGE SCHEDULE

SIGN TAG	SIGN TYPE	MESSAGE TEXT NUMBER	MESSAGE TEXT WORDING	REMARKS
S112C	E		(PICTOGRAM) AUTHORIZED PERSONNEL ONLY	
S112D	E		(PICTOGRAM) NO SMOKING	
S112F	E		(PICTOGRAM) FIRE EXTINGUISHER	
S112G	E		(PICTOGRAM) AUTHORIZED PERSONNEL ONLY	1.
S112H	A		POP ROOM	1.
S112J	E		(PICTOGRAM) NO SMOKING	1.
S112K	E		(PICTOGRAM) FIRE EXTINGUISHER	1.
S113	A		COPY	
S114	A		BREAK ROOM	
S115	C		(PICTOGRAM) WOMEN	
S116	C		(PICTOGRAM) MENS	
S117	B		QUALITY ASSURANCE	
S117A	B		QUALITY ASSURANCE	
S118	B		FOREMAN #2	
S118A	B		FOREMAN #2	
S119	B		FOREMAN	
S121	A		PAINT BOOTH AND DRYING	1.
S121A	A		SHEET METAL	1.
S122	A		ENGRAVING	
S123	A		MATERIAL STORAGE	1.
S123C	A		WATERJET CHILLER	1.
S124	A		TOOLS	
S124A	A		TOOLS	
S125A	A		CARPENTRY	
S125B	A		DUST COLLECTION	1.
S125C	A		CARPENTRY	1.
S126	A		PAINT BOOTH AND DRYING	
S128	A		CHEMICAL TREATING	
S129	A		SANDING / PREP	
S130	A		SAND-BLASTING	
S131	A		BREAK-DOWN AND ASSEMBLY	
S132	A		COMPOSITE PREP AND FIBERGLASS	
S132A	A		MATERIAL / LAYUP	
S133	A		WELDING	
S133A	A		WELDING	1.
S134	C		(PICTOGRAM) MEN'S	
S135	A		ELECTRICAL	
S136	A		JANITOR	
S137	A		FIRE PROTECTION	1.
S138	A		COMPRESSOR	

GENERAL SIGNAGE SCHEDULE NOTES:

1. REFER TO SPECIFICATION SECTION 10 14 00 20 INTERIOR SIGNAGE FOR BASIS OF DESIGN OR EQUIVALENT MANUFACTURER, PRODUCT STYLE AND COLOR.
2. REFER TO SIGNAGE PLACEMENT DRAWINGS FOR LOCATION OF INTERIOR SIGNS.
3. REFER TO EXTERIOR BUILDING ELEVATIONS, SIGNAGE SCHEDULE AND SIGNAGE DRAWINGS FOR LOCATION OF ALL EXTERIOR SIGNAGE.
4. REFER TO SIGNAGE DETAILS FOR SIGNAGE CONSTRUCTION AND MOUNTING ELEVATION.
5. REFER TO ARCHITECTURAL DRAWINGS FOR COORDINATION OF SIGNAGE INSTALLATION TO WALL CONSTRUCTION. SIGNAGE MUST BE ANCHORED THRU THE SURFACE APPLIED WALL FINISHES TO THE SUBSTRATE WALL.
6. ALL HARDWARE/MOUNTING ATTACHMENTS TO BE CONCEALED AND APPROPRIATE FOR THE RECEIVING BUILDING SURFACE.
7. PROVIDE MESSAGE INSERTS FOR WINDOW SIGNS WHERE INDICATED IN THE SIGNAGE DRAWINGS OR SPECIFICATIONS.
8. ALL SIGNAGE SHALL COMPLY WITH THE MOST CURRENT VERSION OF THE AMERICANS WITH DISABILITIES ACT (ADA).
9. INSTALL FIRE EXTINGUISHER IDENTIFICATION SIGN ABOVE ALL FIRE EXTINGUISHER CABINETS AND WALL BRACKET MOUNTED EXTINGUISHERS. SEE LIFE SAFETY PLANS FOR FIRE EXTINGUISHER LOCATIONS.
10. CONSTRUCT EXTERIOR GRADE SIGNAGE WITH MATERIAL APPROPRIATE FOR EXTERIOR USAGE.
11. GENERAL CONTRACTOR SHALL BE RESPONSIBLE FOR COORDINATING WITH SIGNAGE MANUFACTURER(S) TO PROVIDE ANY ADDITIONAL SIGNAGE AS REQUIRED BY GOVERNING MUNICIPALITY AT THE SITE LOCATION.
12. ALL MESSAGE TEXT AS SHOWN ON THE SIGN SCHEDULE IS A PLACE HOLDER ONLY AND IS NOT THE FINAL TEXT MESSAGE. ALL MESSAGE TEXT SHALL BE CONFIRMED BY GOVERNMENT END USER PRIOR TO SIGNAGE SHOP DRAWINGS. ALLOW FOR MAXIMUM 4 DIGIT ROOM NUMBERS AND MINIMUM 25 CHARACTER ROOM NAMES TYPICAL FOR ALL SIGNS.
13. PROVIDE EXTERIOR BUILDING NUMBER SIGN PER BASE STANDARDS AND IN ACCORDANCE WITH DESIGN: SIGN STANDARDS UFC 3-120-1.

REMARKS:

1. EXTERIOR GRADE
2. EXTERIOR BUILDING NUMBER SIGNAGE
3. EXTERIOR BUILDING SIGNAGE. ESTIMATE 5 LETTERS,FINAL LETTERS TO BE CONFIRMED BY GOVERNMENT END USER PRIOR TO FABRICATION.
4. COORDINATE WITH APPROVED GOVERNMENT REPRESENTATIVE THE ROOM NAMES TO BE LISTED ON DIRECTIONAL AND DIRECTORY SIGN TYPE(S).

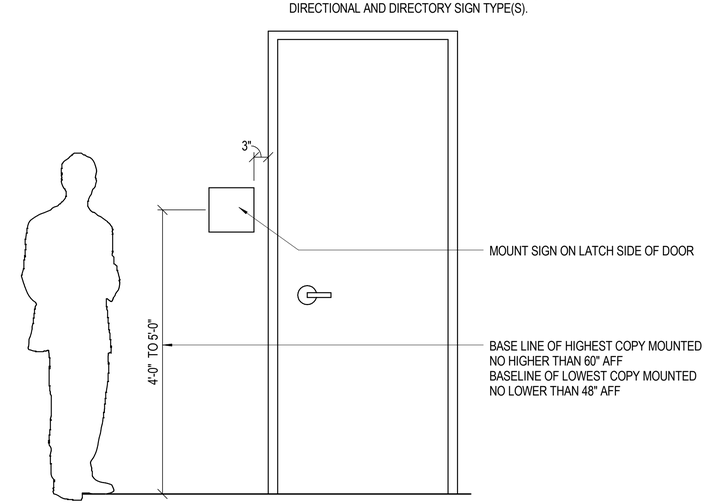

TYPICAL INTERIOR SIGN INSTALLATION - WALL

SCALE: NOT TO SCALE

SYM	DESCRIPTION	DATE	APPR

NAVFAC

COMMONWEALTH OF VIRGINIA
JOHN B. ANDERSON III
Lic. No. 015146
3/18/2016
ARCHITECT

Wiley|Wilson | BURNS McDONNELL
JOINT VENTURE

A/E INFO.

APPROVED
FOR COMMANDER NAVFAC / B.L.T.L.
ACTIVITY
SATISFACTORY TO DATE
DES MO DRW MO CHK TLF
PROJECT MANAGER
IPT TECH. BRANCH HEAD
CHIEF ENG/ARCH

DEPARTMENT OF THE NAVY
NAVAL FACILITIES ENGINEERING COMMAND
WEBSTER FIELD, NAS PATUXENT RIVER
NAVAL FACILITIES ENGINEERING COMMAND ~ WASHINGTON
ST. INIGOES, MD
NAVAL AIR STATION PATUXENT RIVER
ST. INIGOES, MD
BUILDING 8008 REPAIRS, ALTERATIONS AND ADDITION
SIGNAGE SCHEDULE

SCALE: AS NOTED
EPROJECT NO. 1183080
CONSTR. CONTR. NO. N40080-15-D-0452
NAVFAC DRAWING NO. 13078384
SHEET 100 OF 180
A-711

DRAWFORM REVISION: 10 MAY 2014

FILE NAME: C:\Revit_Projects\86314_A_Central_jbanderson@burnsmcd.com.rvt
REVDATE: 3/18/2016 9:20:32 AM

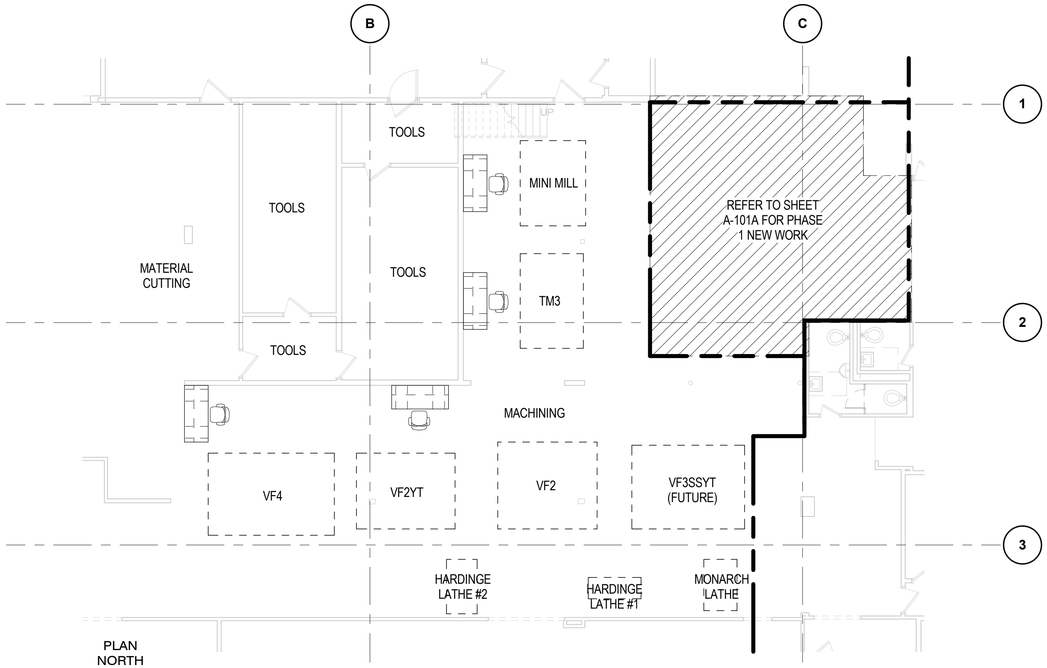

TEMPORARY CONDITIONS PLAN - PHASE 1

SCALE: 1/8" = 1'-0"

GENERAL TEMPORARY CONDITION PLAN NOTES:

1. REFER TO GC100 PHASING PLANS AND NOTES SHEETS FOR COORDINATION AND FURTURE REQUIREMENTS.
2. CONTRACTOR TO PROVIDE REQUIRED POWER / DATA IN THE TEMPORARY LOCATION OF THE ADMINISTRATIVE SPACES AND EQUIPMENT.
3. RELOCATE TWO EXISTING EWLDING HOODS FROM EXISTING WELDING AREA TO TEMPORARY WELDING AREA IN PHASE 3. PROVIDE TEMPORARY SHEET METAL DUCT TO THE BUILDING EXTERIOR, MATCHING THE EXISTING SIZE.
4. PROVIDE VENTILATION FOR THE TEMPORARY CHEMICAL TREATMENT ROOM AS FOLLOWS: RELOCATE EXISTING TANK UTILITY SET EXHAUST FAN ON THE ROOF AS SHOWN ON M-201A WITH A TEMPORARY ROOF CURB, AND PVC DUCTING TO THE TEMPORARY TANK LOCATIONS AND MAKE FULLY FUNCTIONAL. PROVIDE ROOF EXHAUST FAN EF-1 IN THE TEMPORARY LOCATION ON A TEMPORARY ROOF CUB WITH 10X10 DUCTWORK AND TWO 8X8 EXHAUST GRILLES LOCATED AT FLOOR LEVEL AND 12' ABOVE FINISHED FLOOR. THE EXHAUST FANS SHALL OPERATE CONTINUOUSLY. PROVIDE SEALED SHEET METAL CLOSURE OF 12X12 DUCT WITH BELL MOUTH RETURN LOCATED IN THE SPACE TO PREVENT RETURN OF ANY AIR FROM THE TEMPORARY CHEMICAL TREATMENT ROOM. PROVIDE 40X24 TRANSFER DUCT WITH FIRE DAMPER IN THE TEMPORARY PARTITION. AT THE NEARING OF COMPLETION OF THE PHASE 3 WORK, COORDINATE THE RELOCATION OF THE EXHAUST FANS TO THEIR FINAL LOCATION IN THE CHEMICAL TREATMENT ROOM. REMOVE TEMPORARY CURBS AND PATCH THE ROOF.

CONTRACTOR TO PROVIDE REQUIRED TEMPORARY POWER/DATA FOR EVERY DESK:

(1) BRANCH HEAD
(3) ENGINEERING
(2) CAD
(1) PROCUREMENT
(1) RECEIVING
(1) GOVERNMENT COORINATOR
(1) QUALITY CONTROL
(1) FOREMAN
(1) SEC FACILITIES
(1) CONTRACTOR LEAD

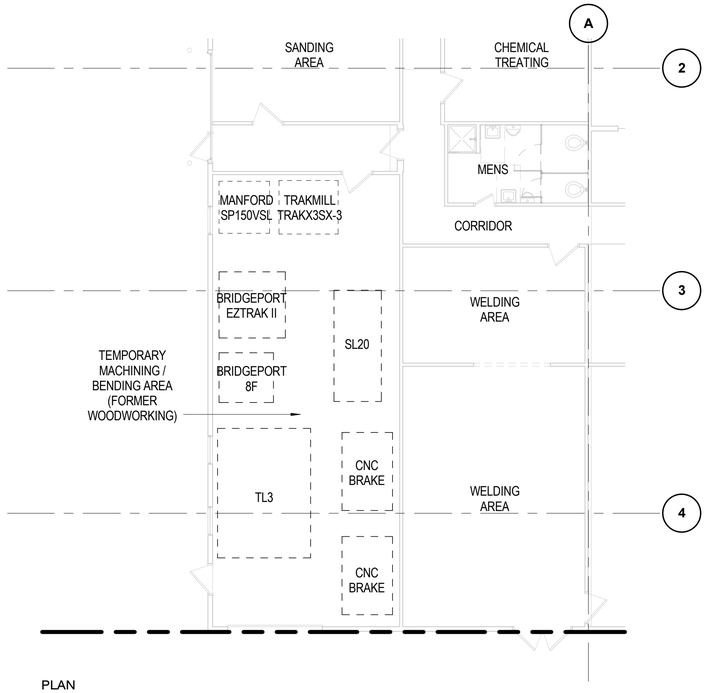

TEMPORARY CONDITIONS PLAN - PHASE 1

SCALE: 1/8" = 1'-0"

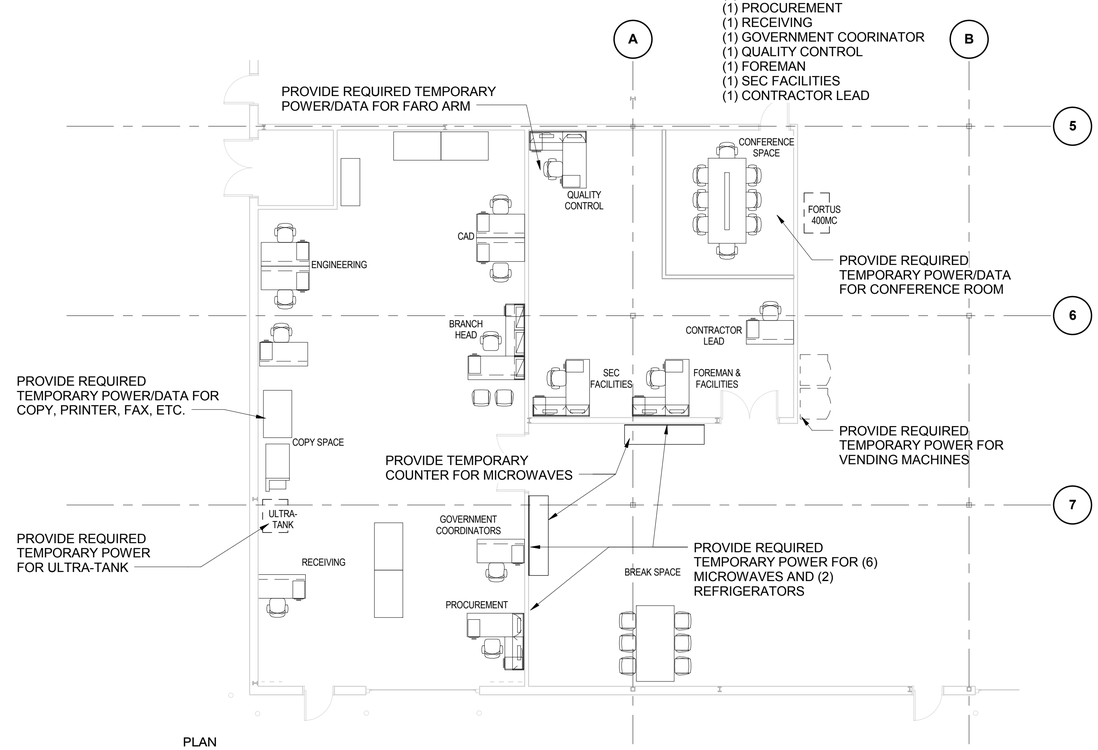

TEMPORARY CONDITIONS PLAN - PHASE 2

SCALE: 1/8" = 1'-0"

SYM	DESCRIPTION	DATE	APPR

NAVFAC

COMMONWEALTH OF VIRGINIA
JOHN B. ANDERSON III
Lic. No. 015146
3/18/2016
ARCHITECT

Wiley|Wilson | BURNS McDONNELL
JOINT VENTURE

A/E INFO

APPROVED
FOR COMMANDER NAVFAC / B.L.T.L.

ACTIVITY

SATISFACTORY TO DATE
DES JBA | DRW JBA | CHK LTC

PROJECT MANAGER
IPT TECH. BRANCH HEAD
CHIEF ENG/ARCH

DEPARTMENT OF THE NAVY
NAVAL FACILITIES ENGINEERING COMMAND
WEBSTER FIELD, NAS PATUXENT RIVER

NAVAL FACILITIES ENGINEERING COMMAND
ST. INIGOES, MD ~ WASHINGTON

NAVAL AIR STATION PATUXENT RIVER
ST. INIGOES, MD

BUILDING 8008 REPAIRS, ALTERATIONS AND ADDITION

TEMPORARY CONDITIONS PLAN - PHASES 1 & 2

SCALE: AS NOTED
EPROJECT NO. 1183080
CONSTR. CONTR. NO. N40080-15-D-0452
NAVFAC DRAWING NO. 13078385
SHEET 101 OF 180
AJ101A

DRAWFORM REVISION: 10 MAY 2014

FILE NAME: C:\Revit_Projects\86314_A_Central_jbanderson@burnsmcd.com.rvt
REV/DATE: 5/9/2016 2:56:32 PM

GENERAL TEMPORARY CONDITION PLAN NOTES:

1. REFER TO GC100 PHASING PLANS AND NOTES SHEETS FOR COORDINATION AND FURTURE REQUIREMENTS.
2. CONTRACTOR TO PROVIDE REQUIRED POWER / DATA IN THE TEMPORARY LOCATION OF THE ADMINISTRATIVE SPACES AND EQUIPMENT.
3. RELOCATE TWO EXISTING EWLDING HOODS FROM EXISTING WELDING AREA TO TEMPORARY WELDING AREA IN PHASE 3. PROVIDE TEMPORARY SHEET METAL DUCT TO THE BUILDING EXTERIOR, MATCHING THE EXISTING SIZE.
4. PROVIDE VENTILATION FOR THE TEMPORARY CHEMICAL TREATMENT ROOM AS FOLLOWS: RELOCATE EXISTING TANK UTILITY SET EXHAUST FAN ON THE ROOF AS SHOWN ON M-201A WITH A TEMPORARY ROOF CURB, AND PVC DUCTING TO THE TEMPORARY TANK LOCATIONS AND MAKE FULLY FUNCTIONAL. PROVIDE ROOF EXHAUST FAN EF-1 IN THE TEMPORARY LOCATION ON A TEMPORARY ROOF CUB WITH 10X10 DUCTWORK AND TWO 8X8 EXHAUST GRILLES LOCATED AT FLOOR LEVEL AND 12' ABOVE FINISHED FLOOR. THE EXHAUST FANS SHALL OPERATE CONTINUOUSLY. PROVIDE SEALED SHEET METAL CLOSURE OF 12X12 DUCT WITH BELL MOUTH RETURN LOCATED IN THE SPACE TO PREVENT RETURN OF ANY AIR FROM THE TEMPORARY CHEMICAL TREATMENT ROOM. PROVIDE 40X24 TRANSFER DUCT WITH FIRE DAMPER IN THE TEMPORARY PARTITION. AT THE NEARING OF COMPLETION OF THE PHASE 3 WORK, COORDINATE THE RELOCATION OF THE EXHAUST FANS TO THEIR FINAL LOCATION IN THE CHEMICAL TREATMENT ROOM. REMOVE TEMPORARY CURBS AND PATCH THE ROOF.

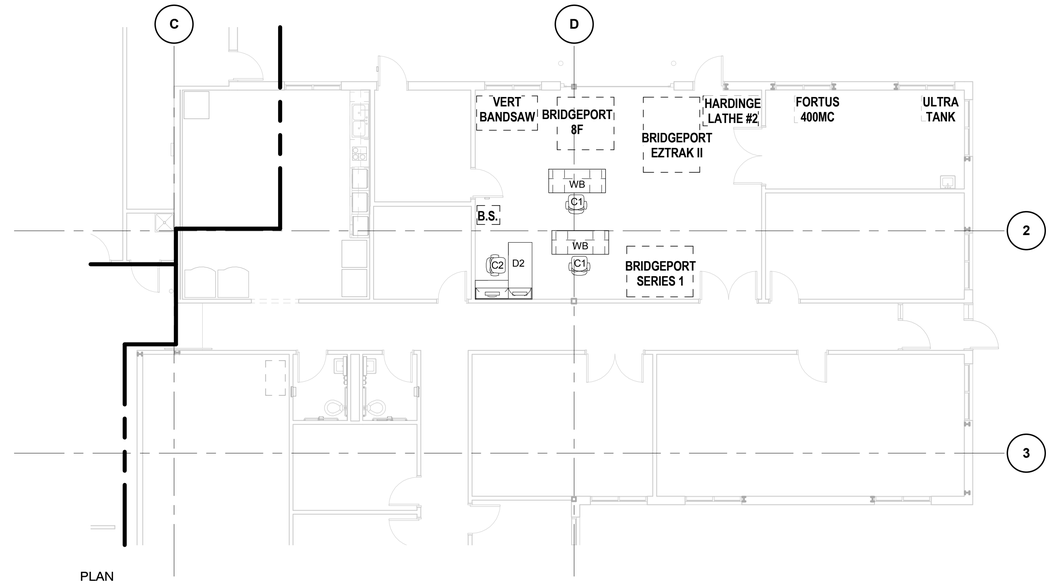

TEMPORARY CONDITIONS PLAN - PHASE 3
SCALE: 1/8" = 1'-0"

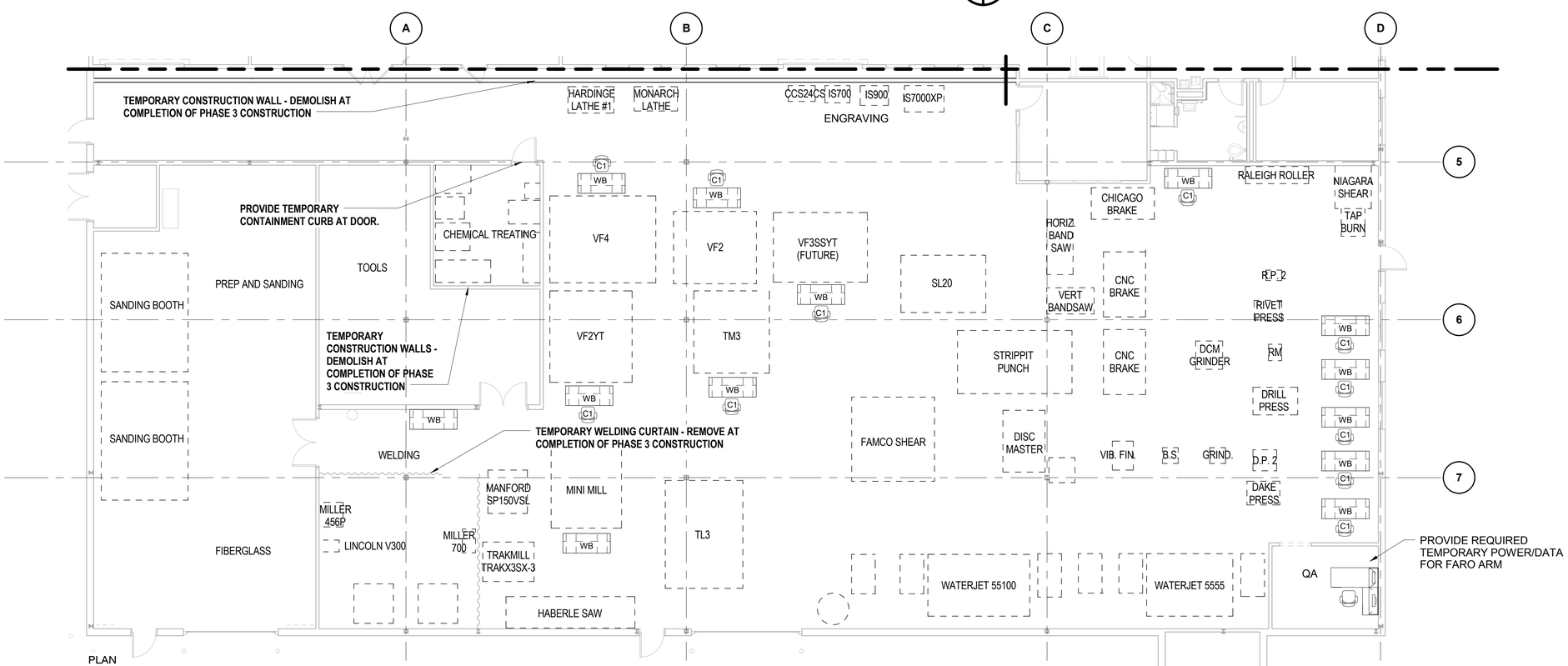

TEMPORARY CONDITIONS PLAN - PHASE 3
SCALE: 1/8" = 1'-0"

SYM	DESCRIPTION	DATE	APPR

NAVFAC

COMMONWEALTH OF VIRGINIA
JOHN B. ANDERSON III
Lic. No. 015146
3/18/2016
ARCHITECT

Wiley|Wilson | BURNS McDONNELL
JOINT VENTURE

A/E INFO

APPROVED
FOR COMMANDER NAVFAC / B.L.T.L.

ACTIVITY

SATISFACTORY TO DATE
DES JBA | DRW JBA | CHK LTC
PROJECT MANAGER
IPT TECH. BRANCH HEAD
CHIEF ENG/ARCH

DEPARTMENT OF THE NAVY
NAVAL FACILITIES ENGINEERING COMMAND
WEBSTER FIELD, NAS PATUXENT RIVER

NAVAL FACILITIES ENGINEERING COMMAND ~ WASHINGTON
ST. INIGOES, MD

NAVAL AIR STATION PATUXENT RIVER
ST. INIGOES, MD

BUILDING 8008 REPAIRS, ALTERATIONS AND ADDITION

TEMPORARY CONDITIONS PLAN - PHASE 3

SCALE: AS NOTED
EPROJECT NO. 1183080
CONSTR. CONTR. NO. N40080-15-D-0452
NAVFAC DRAWING NO. 13078386
SHEET 102 OF 180
AJ101B

DRAWFORM REVISION: 10 MAY 2014

FILE NAME: C:\Revit_Projects\86314_A_Central_jbanderson@burnsmcd.com.rvt
REV/DATE: 5/9/2016 2:56:34 PM

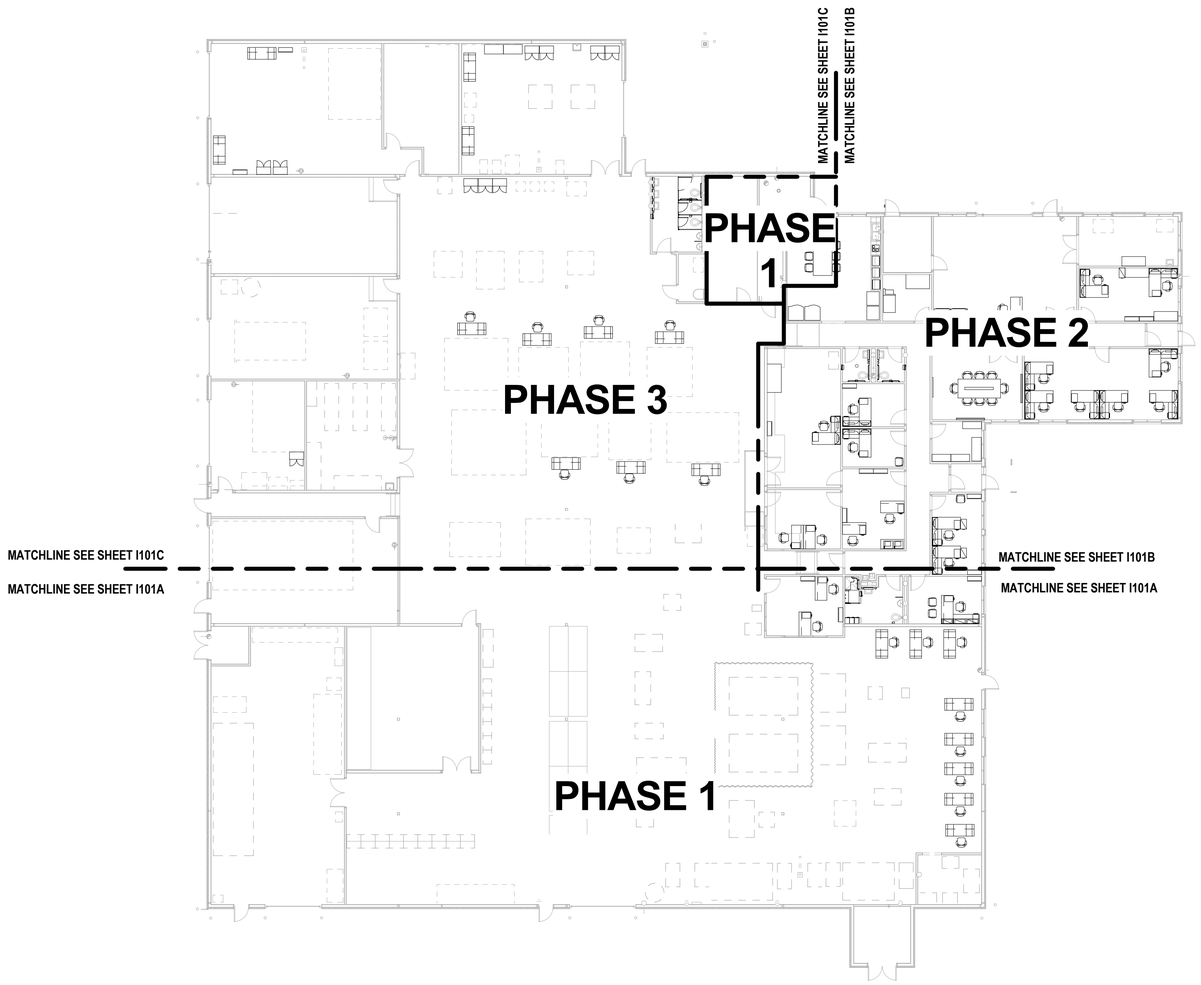

PLAN NORTH

OVERALL FURNITURE FOOTPRINT PLAN

SCALE: 1/16" = 1'-0"

GENERAL FURNITURE PLAN NOTES:

1. FURNITURE, FIXTURES AND EQUIPMENT (FF&E) FOOTPRINT DRAWINGS PROVIDED FOR COORDINATION WITH BUILDING SYSTEMS ONLY NOT IN CONTRACT.
2. REFER TO ARCHITECTURAL FLOOR PLANS FOR BUILDING LAYOUT, DIMENSIONS, AND COORDINATION TO BUILDING SYSTEMS AND STRUCTURE.
3. REFER TO ELECTRICAL DRAWINGS FOR COORDINATION OF LIGHTING, POWER, DATA, COMMUNICATIONS, AND LOCATIONS OF OTHER WALL AND FLOOR MOUNTED ELECTRICAL DEVICES AND EQUIPMENT FOR COORDINATION TO FURNITURE LAYOUTS. CONTRACTOR SHALL IDENTIFY ANY CONFLICTS WITH FURNITURE LAYOUTS.
4. PROVIDE COMPLETE POWER/COMM CONNECTIONS AS NEEDED AT GOVERNEMENT PROVIDED WORKSTATIONS. COORDINATE WITH USERS ON REQUIREMENTS.
5. REFER TO MECHANICAL DRAWINGS FOR COORDINATION OF PLUMBING AND HVAC SYSTEMS TO FURNITURE LAYOUTS. THERMOSTATS, DIFFUSERS AND ACCESS PANELS SHALL NOT CONFLICT WITH FURNITURE LAYOUTS. CONTRACTOR SHALL IDENTIFY ANY CONFLICTS WITH FURNITURE LAYOUTS.
6. EQUIPMENT AND STORAGE SHOWN DASHED AND HALFTONED IS EXISTING OR ACTIVITY PROVIDED. ITEMS ARE SHOWN FOR COORDINATION PURPOSES.

KEY PLAN:

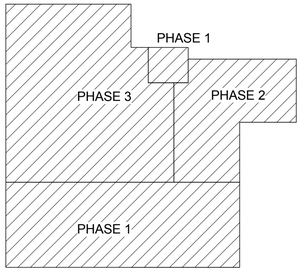

GRAPHIC SCALE:

1/16" =1'-0" 0' 8' 16' 32'

FOR INFORMATION ONLY

SYM	DESCRIPTION	DATE	APPR

NAVFAC

Wiley|Wilson | BURNS McDONNELL JOINT VENTURE

A/E INFO.

APPROVED

FOR COMMANDER NAVFAC / B.L.T.L.

ACTIVITY

SATISFACTORY TO DATE

DES MO	DRW MO	CHK TLF

PROJECT MANAGER

IPT TECH. BRANCH HEAD

CHIEF ENG/ARCH

DEPARTMENT OF THE NAVY
NAVAL FACILITIES ENGINEERING COMMAND
WEBSTER FIELD, NAS PATUXENT RIVER
NAVAL FACILITIES ENGINEERING COMMAND ~ WASHINGTON
ST. INIGOES, MD
NAVAL AIR STATION PATUXENT RIVER
ST. INIGOES, MD
BUILDING 8008 REPAIRS, ALTERATIONS AND ADDITION
OVERALL FURNITURE FOOTPRINT FLOOR PLAN

SCALE: AS NOTED
EPROJECT NO. 1183080
CONSTR. CONTR. NO. N40080-15-D-0452
NAVFAC DRAWING NO. 13078387
SHEET 103 OF 180
I-101

DRAWFORM REVISION: 10 MAY 2014

FILE NAME: C:\Revit_Projects\86314_A_Central_jbanderson@burnsmcd.com.rvt
REVDATE: 3/18/2016 9:23:09 AM

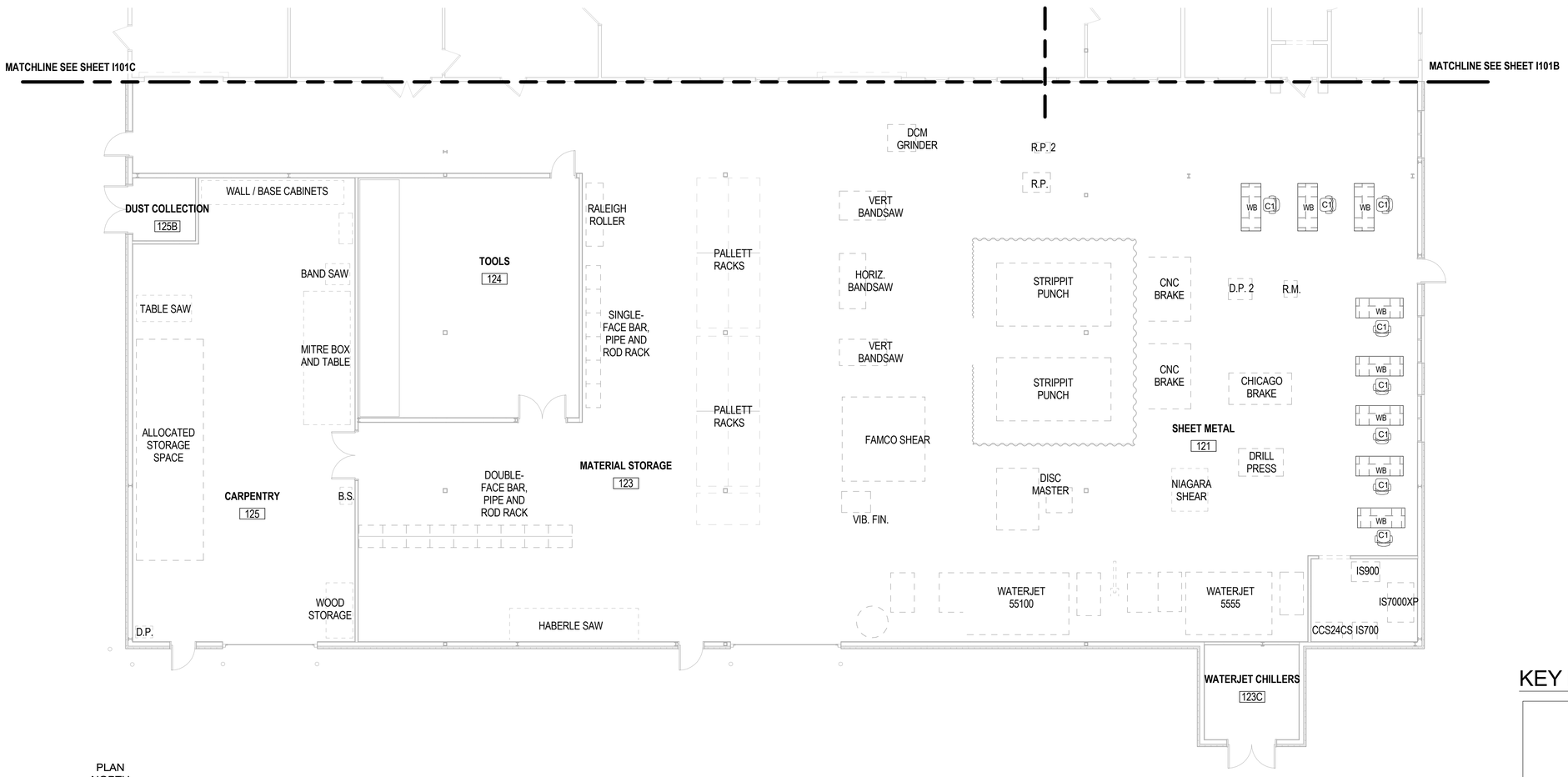

PLAN NORTH

FURNITURE FOOTPRINT PLAN - PHASE 1

SCALE: 1/8" = 1'-0"

GENERAL FURNITURE PLAN NOTES:

1. FURNITURE, FIXTURES AND EQUIPMENT (FF&E) FOOTPRINT DRAWINGS PROVIDED FOR COORDINATION WITH BUILDING SYSTEMS ONLY NOT IN CONTRACT.
2. REFER TO ARCHITECTURAL FLOOR PLANS FOR BUILDING LAYOUT, DIMENSIONS, AND COORDINATION TO BUILDING SYSTEMS AND STRUCTURE.
3. REFER TO ELECTRICAL DRAWINGS FOR COORDINATION OF LIGHTING, POWER, DATA, COMMUNICATIONS, AND LOCATIONS OF OTHER WALL AND FLOOR MOUNTED ELECTRICAL DEVICES AND EQUIPMENT FOR COORDINATION TO FURNITURE LAYOUTS. CONTRACTOR SHALL IDENTIFY ANY CONFLICTS WITH FURNITURE LAYOUTS.
4. PROVIDE COMPLETE POWER/COMM CONNECTIONS AS NEEDED AT GOVERNEMENT PROVIDED WORKSTATIONS. COORDINATE WITH USERS ON REQUIREMENTS.
5. REFER TO MECHANICAL DRAWINGS FOR COORDINATION OF PLUMBING AND HVAC SYSTEMS TO FURNITURE LAYOUTS. THERMOSTATS, DIFFUSERS AND ACCESS PANELS SHALL NOT CONFLICT WITH FURNITURE LAYOUTS. CONTRACTOR SHALL IDENTIFY ANY CONFLICTS WITH FURNITURE LAYOUTS.
6. EQUIPMENT AND STORAGE SHOWN DASHED AND HALFTONED IS EXISTING OR ACTIVITY PROVIDED. ITEMS ARE SHOWN FOR COORDINATION PURPOSES.

FURNITURE LEGEND - EXISTING	
ITEM CODE	DESCRIPTION
C1	TASK CHAIR
C2	TASK CHAIR - OFFICE
C3	STACKING SIDE CHAIR
D1	DESK
D2	6' x 6' DESK L-SHAPED
D3	DESK L-SHAPED 8X6, OVERHEADS
E1	MICROWAVE
E2	REFRIGERATOR
E3	VENDING MACHINE
E4	3-POT COFFEE MAKER WITH HOT WATER FAUCET
FP	FLAT PANEL
MB	MARKER BOARD 72"W X 48"H
S1	BOOKCASE
S2	STORAGE CABINET
S3	SHELVING UNIT
S4	LATERAL FILE 5 DRAWER 42"W
S5	VERTICAL FILE 4-DRAWER
S6	SHELVING UNIT
T1	CONFERENCE TABLE
T2	BREAK ROOM TABLE
T3	COPY ROOM TABLE
T4	TABLE
WB	WORKBENCH

KEY PLAN:

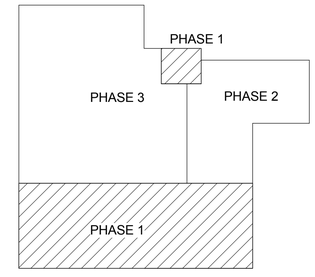

GRAPHIC SCALE:

1/8" =1'-0" 0' 4' 8' 16'

FOR INFORMATION ONLY

SYM	DESCRIPTION	DATE	APPR

NAVFAC

Wiley|Wilson | BURNS McDONNELL JOINT VENTURE

A/E INFO.

APPROVED

FOR COMMANDER NAVFAC / B.L.T.L.

ACTIVITY

SATISFACTORY TO DATE

DES	MO	DRW	MO	CHK	TLF

PROJECT MANAGER

IPT TECH. BRANCH HEAD

CHIEF ENG/ARCH

DEPARTMENT OF THE NAVY
NAVAL FACILITIES ENGINEERING COMMAND
WEBSTER FIELD, NAS PATUXENT RIVER
NAVAL FACILITIES ENGINEERING COMMAND ~ WASHINGTON
ST. INIGOES, MD

NAVAL AIR STATION PATUXENT RIVER
ST. INIGOES, MD

BUILDING 8008 REPAIRS, ALTERATIONS AND ADDITION

FURNITURE FOOTPRINT PLAN - PHASE 1

SCALE: AS NOTED

EPROJECT NO. 1183080

CONSTR. CONTR. NO. N40080-15-D-0452

NAVFAC DRAWING NO. 13078388

SHEET 104 OF 180

I-101A

DRAWFORM REVISION: 10 MAY 2014

FILE NAME: C:\Revit_Projects\86314_A_Central_jbanderson@burnsmcd.com.rvt

REVDATE: 3/18/2016 9:23:16 AM

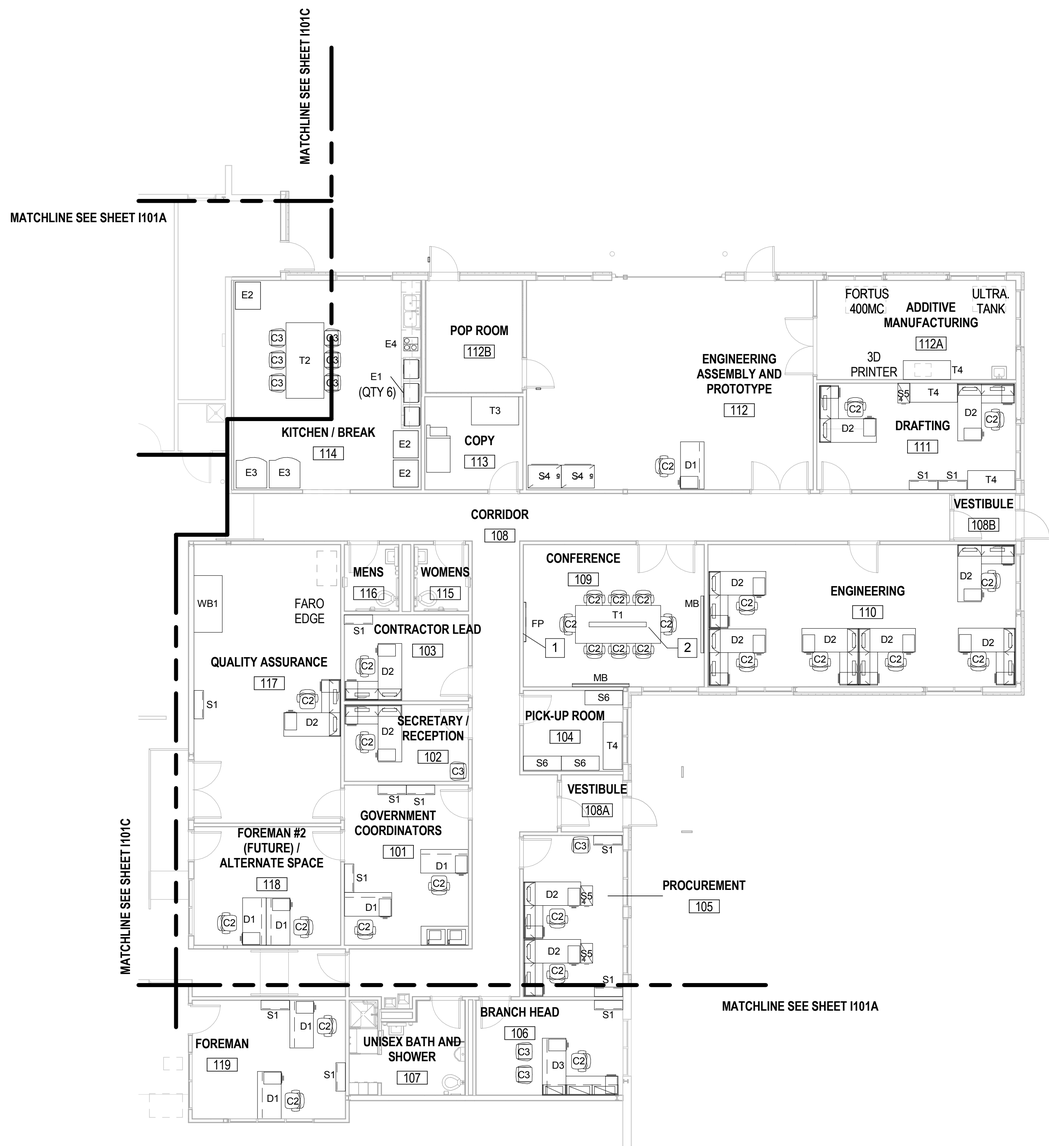

PLAN NORTH

FURNITURE FOOTPRINT PLAN - PHASE 2

SCALE: 1/8" = 1'-0"

FURNITURE LEGEND - EXISTING	
ITEM CODE	DESCRIPTION
C1	TASK CHAIR
C2	TASK CHAIR - OFFICE
C3	STACKING SIDE CHAIR
D1	DESK
D2	6' x 6' DESK L-SHAPED
D3	DESK L-SHAPED 8X6, OVERHEADS
E1	MICROWAVE
E2	REFRIGERATOR
E3	VENDING MACHINE
E4	3-POT COFFEE MAKER WITH HOT WATER FAUCET
FP	FLAT PANEL
MB	MARKER BOARD 72"W X 48"H
S1	BOOKCASE
S2	STORAGE CABINET
S3	SHELVING UNIT
S4	LATERAL FILE 5 DRAWER 42"W
S5	VERTICAL FILE 4-DRAWER
S6	SHELVING UNIT
T1	CONFERENCE TABLE
T2	BREAK ROOM TABLE
T3	COPY ROOM TABLE
T4	TABLE
WB	WORKBENCH

GENERAL FURNITURE PLAN NOTES:

1. FURNITURE, FIXTURES AND EQUIPMENT (FF&E) FOOTPRINT DRAWINGS PROVIDED FOR COORDINATION WITH BUILDING SYSTEMS ONLY NOT IN CONTRACT.
2. REFER TO ARCHITECTURAL FLOOR PLANS FOR BUILDING LAYOUT, DIMENSIONS, AND COORDINATION TO BUILDING SYSTEMS AND STRUCTURE.
3. REFER TO ELECTRICAL DRAWINGS FOR COORDINATION OF LIGHTING, POWER, DATA, COMMUNICATIONS, AND LOCATIONS OF OTHER WALL AND FLOOR MOUNTED ELECTRICAL DEVICES AND EQUIPMENT FOR COORDINATION TO FURNITURE LAYOUTS. CONTRACTOR SHALL IDENTIFY ANY CONFLICTS WITH FURNITURE LAYOUTS.
4. PROVIDE COMPLETE POWER/COMM CONNECTIONS AS NEEDED AT GOVERNEMENT PROVIDED WORKSTATIONS. COORDINATE WITH USERS ON REQUIREMENTS.
5. REFER TO MECHANICAL DRAWINGS FOR COORDINATION OF PLUMBING AND HVAC SYSTEMS TO FURNITURE LAYOUTS. THERMOSTATS, DIFFUSERS AND ACCESS PANELS SHALL NOT CONFLICT WITH FURNITURE LAYOUTS. CONTRACTOR SHALL IDENTIFY ANY CONFLICTS WITH FURNITURE LAYOUTS.
6. EQUIPMENT AND STORAGE SHOWN DASHED AND HALFTONED IS EXISTING OR ACTIVITY PROVIDED. ITEMS ARE SHOWN FOR COORDINATION PURPOSES.

KEY NOTES

1. PROVIDE BLOCKING AS REQUIRED FOR FLAT PANEL DISPLAY.
2. AUDIO VISUAL AND COMM CAPABILITIES AT CONFERENCE TABLE. REFER TO ELEC. AND COMM SHEETS FOR ADDITIONAL INFORMATION.

KEY PLAN:

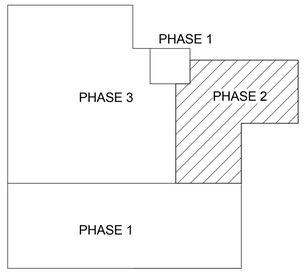

GRAPHIC SCALE:

1/8" =1'-0" 0' 4' 8' 16'

FOR INFORMATION ONLY

SYM	DESCRIPTION	DATE	APPR

NAVFAC

Wiley|Wilson | BURNS McDONNELL JOINT VENTURE

A/E INFO.

APPROVED

FOR COMMANDER NAVFAC / B.L.T.L.

ACTIVITY

SATISFACTORY TO DATE

DES MO	DRW MO	CHK TLF

PROJECT MANAGER

IPT TECH. BRANCH HEAD

CHIEF ENG/ARCH

DEPARTMENT OF THE NAVY
NAVAL FACILITIES ENGINEERING COMMAND
WEBSTER FIELD, NAS PATUXENT RIVER
NAVAL FACILITIES ENGINEERING COMMAND ~ WASHINGTON
ST. INIGOES, MD

NAVAL AIR STATION PATUXENT RIVER
ST. INIGOES, MD

BUILDING 8008 REPAIRS, ALTERATIONS AND ADDITION

FURNITURE FOOTPRINT PLAN - PHASE 2

SCALE: AS NOTED
EPROJECT NO. 1183080
CONSTR. CONTR. NO. N40080-15-D-0452
NAVFAC DRAWING NO. 10378389
SHEET 105 OF 180

I-101B

FILE NAME: C:\Revit_Projects\86314_A_Central_jhanderson@burnsmcd.com.rvt
REVDATE: 3/18/2016 9:23:26 AM

DRAWFORM REVISION: 10 MAY 2014

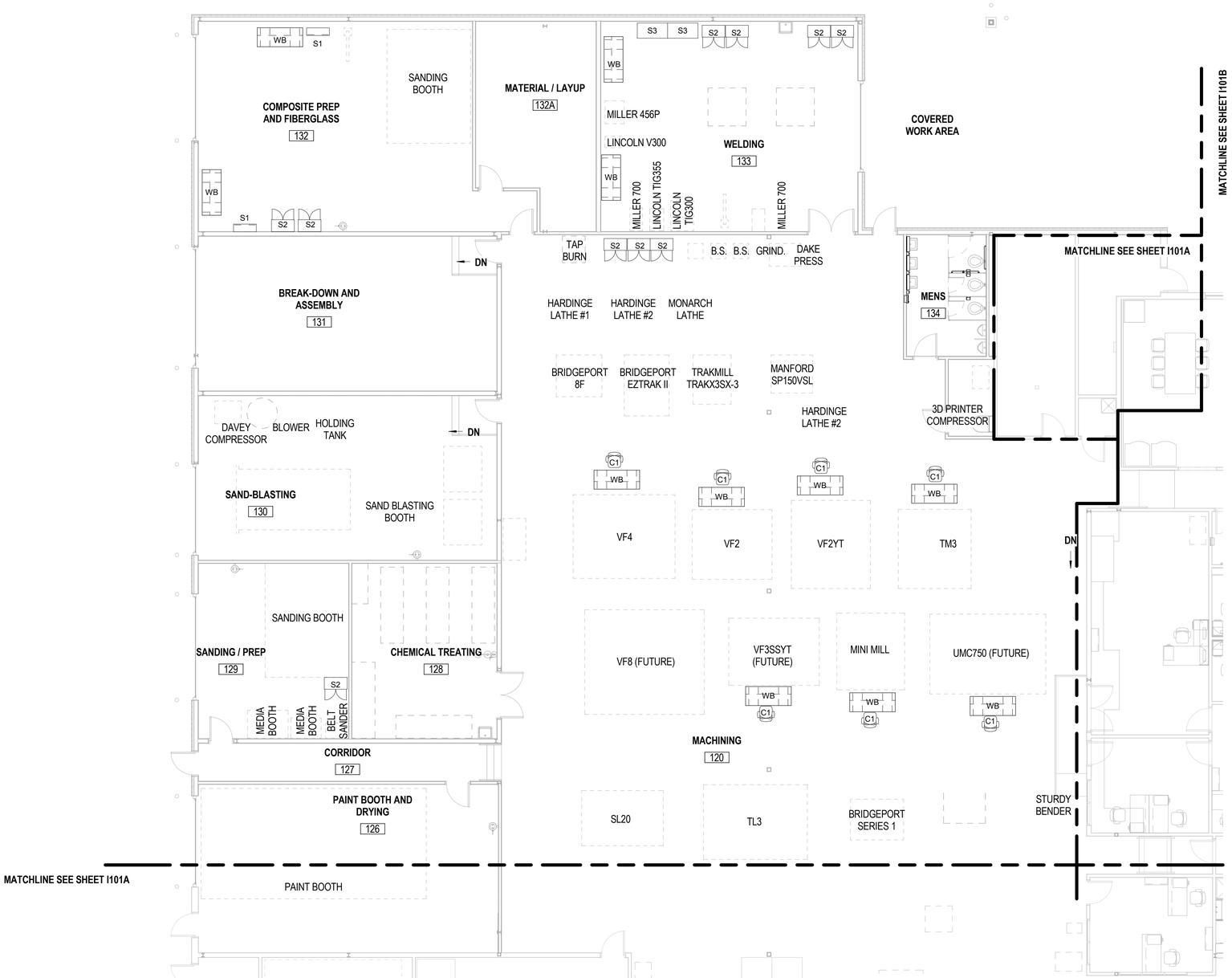

PLAN NORTH

FURNITURE FOOTPRINT PLAN - PHASE 3

SCALE: 1/8" = 1'-0"

GENERAL FURNITURE PLAN NOTES:

1. FURNITURE, FIXTURES AND EQUIPMENT (FF&E) FOOTPRINT DRAWINGS PROVIDED FOR COORDINATION WITH BUILDING SYSTEMS ONLY NOT IN CONTRACT.
2. REFER TO ARCHITECTURAL FLOOR PLANS FOR BUILDING LAYOUT, DIMENSIONS, AND COORDINATION TO BUILDING SYSTEMS AND STRUCTURE.
3. REFER TO ELECTRICAL DRAWINGS FOR COORDINATION OF LIGHTING, POWER, DATA, COMMUNICATIONS, AND LOCATIONS OF OTHER WALL AND FLOOR MOUNTED ELECTRICAL DEVICES AND EQUIPMENT FOR COORDINATION TO FURNITURE LAYOUTS. CONTRACTOR SHALL IDENTIFY ANY CONFLICTS WITH FURNITURE LAYOUTS.
4. PROVIDE COMPLETE POWER/COMM CONNECTIONS AS NEEDED AT GOVERNEMENT PROVIDED WORKSTATIONS. COORDINATE WITH USERS ON REQUIREMENTS.
5. REFER TO MECHANICAL DRAWINGS FOR COORDINATION OF PLUMBING AND HVAC SYSTEMS TO FURNITURE LAYOUTS. THERMOSTATS, DIFFUSERS AND ACCESS PANELS SHALL NOT CONFLICT WITH FURNITURE LAYOUTS. CONTRACTOR SHALL IDENTIFY ANY CONFLICTS WITH FURNITURE LAYOUTS.
6. EQUIPMENT AND STORAGE SHOWN DASHED AND HALFTONED IS EXISTING OR ACTIVITY PROVIDED. ITEMS ARE SHOWN FOR COORDINATION PURPOSES.

KEY PLAN:

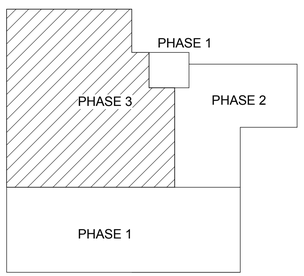

GRAPHIC SCALE:

1/8" =1'-0" 0' 4' 8' 16'

FOR INFORMATION ONLY

SYM	DESCRIPTION	DATE	APPR

NAVFAC

Wiley|Wilson | BURNS McDONNELL JOINT VENTURE

A/E INFO.

APPROVED

FOR COMMANDER NAVFAC / B.L.T.L.

ACTIVITY

SATISFACTORY TO DATE

DES	MO	DRW	MO	CHK	TLF

PROJECT MANAGER

IPT TECH. BRANCH HEAD

CHIEF ENG/ARCH

DEPARTMENT OF THE NAVY
NAVAL FACILITIES ENGINEERING COMMAND
WEBSTER FIELD, NAS PATUXENT RIVER
NAVAL FACILITIES ENGINEERING COMMAND ~ WASHINGTON
ST. INIGOES, MD
NAVAL AIR STATION PATUXENT RIVER
ST. INIGOES, MD
BUILDING 8008 REPAIRS, ALTERATIONS AND ADDITION
FURNITURE FOOTPRINT PLAN - PHASE 3

SCALE: AS NOTED
EPROJECT NO. 1183080
CONSTR. CONTR. NO. N40080-15-D-0452
NAVFAC DRAWING NO. 13078390
SHEET 106 OF 180
I-101C

DRAWFORM REVISION: 10 MAY 2014

FILE NAME: C:\Revit_Projects\86314_A_Central_jbanderson@burnsmcd.com.rvt
REVDATE: 3/18/2016 9:23:34 AM

FIRE ALARM / MASS NOTIFICATION LEGEND

FAA	REMOTE ANNUNCIATOR
FMCP	FIRE ALARM CONTROL UNIT AND MASS NOTIFICATION AUTONOMOUS CONTROL UNIT
F	MANUAL FIRE ALARM PULL STATION
PS	PRESSURE SWITCH H = HIGH L = LOW
NAC	NOTIFICATION APPLIANCE CIRCUIT BOOSTER POWER SUPPLY
VS	TAMPER SWITCH
WF	WATER FLOW SWITCH
R	IN-DUCT PHOTOELECTRIC SMOKE DETECTOR R = RETURN S = SUPPLY
P	CEILING MOUNTED SMOKE DETECTOR P = PHOTOELECTRIC
S	SPEAKER
	SPEAKER / FIRE ALARM STROBE COMBINATION
B	ELECTRIC FIRE ALARM BELL
	STROBE
	WALL MOUNT STROBE
AOM	ADDRESSABLE OUTPUT MODULE
AIM	ADDRESSABLE INPUT MODULE
	GROUND

ABBREVIATIONS:

AFF	ABOVE FINISHED FLOOR
AHJ	AUTHORITY HAVING JURISDICTION
AWG	AMERICAN WIRE GAGE
dBA	DECIBEL A-WEIGHTED
NAC	NOTIFICATION APPLIANCE CIRCUIT
NEC	NATIONAL ELECTRICAL CODE
SLC	SIGNALING LINE CIRCUIT
SPD	SURGE PROTECTION DEVICE
TYP	TYPICAL
UL	UNDERWRITERS LABORATORIES

DETAIL/SECTION TITLE

SECTION, DETAIL OR ELEVATION IDENTIFICATION MARK

PLATE NUMBER WHERE SECTION, DETAIL OR ELEVATION IS TAKEN

DETAIL CALLOUT SYMBOL

DETAIL NUMBER

PLATE NUMBER WHERE DETAIL IS DRAWN

SECTION CUT SYMBOL

SECTION LETTER

PLATE NUMBER WHERE SECTION IS DRAWN

VIEW SECTION

DESIGN CRITERIA:

1. AUDIBLE NOTIFICATION SHALL BE PROVIDED FOR ALL AREAS AND ROOMS THROUGHOUT THE FACILITY. THE FOLLOWING DESIGN CRITERIA SHALL BE ACCOMPLISHED WITH ALL DOORS, FIRE SHUTTERS, AND WINDOWS CLOSED. WHERE THESE DESIGN CRITERIA ARE NOT ACCOMPLISHED DURING COMMISSIONING, THE CONTRACTOR SHALL PROVIDE ADDITIONAL DEVICES TO MEET THE MINIMUM DESIGN CRITERIA REQUIREMENTS AT NO ADDITIONAL COST. AS-BUILT DRAWINGS SHALL DEMONSTRATE THE ADDITIONAL DEVICES AND OR MODIFICATIONS TO THE INSTALLED DEVICES DO NOT EXCEED THE LIMITATIONS OF THE FACP, NAC BOOSTER PANELS, OR AMP BOOSTER PANEL (INCLUSIVE OF SAFETY FACTORS).

2. A SPEAKER IS NOT REQUIRED IN EVERY ROOM; HOWEVER, SPEAKER PERFORMANCE MUST ADHERE TO THE SOUND POWER AND INTELLIGIBILITY CRITERIA WITHIN THE SPECIFICATIONS, CONTRACT DRAWINGS, NFPA 72, AND UFC 4-021-01.

3. THE SOUND POWER OF THE AUDIBLE NOTIFICATION SHALL BE A MINIMUM OF 70 DBA AND 15 DBA OVER THE AMBIENT CONDITIONS AT THE MOST REMOTE LOCATION WITHIN THE ROOM OR AREA. THE SOUND POWER SHALL BE MEASURED OFF THE TEMPORAL TONE PRECEDING EACH VOICE MESSAGE. THE FOLLOWING CRITERIA SHALL BE UTILIZED FOR REVIEW AND APPROVAL OF SHOP DRAWINGS:

   A. THE SOUND POWER SHALL BE REDUCED BY 6 DBA EACH TIME THE DISTANCE BETWEEN THE APPLIANCE AND THE LISTENER IS DOUBLED. STARTING DISTANCE IS PER MANUFACTURER'S DATASHEET, TYPICALLY 10 FT.

   B. THE SOUND POWER SHALL BE REDUCED IN ACCORDANCE WITH THE MANUFACTURER'S DATASHEET FOR SOUND POWER DISTRIBUTION NOT PERPENDICULAR TO THE SPEAKER FACE. REFER TO MANUFACTURER'S TYPICAL SOUND OUTPUT DISTRIBUTION DIAGRAM.

   C. A MINIMUM 15 DBA LOSS SHALL BE ASSUMED THROUGH A STANDARD, CLOSED DOOR.

4. INTELLIGIBILITY SHALL MEET THE FOLLOWING CRITERIA:

   A. NORMALLY-UNOCCUPIED ROOMS SHALL BE CONSIDERED STORAGE ROOMS, MECHANICAL ROOMS, RISER ROOMS, ELECTRICAL ROOMS, JANITOR ROOMS, COMMUNICATION CLOSETS. ALL OTHER ROOMS SHALL BE CONSIDERED NORMALLY-OCCUPIED.

   B. A CIS SCORE OF 0.7 SHALL BE ACHIEVED IN THE MOST REMOTE AREA OF EACH ROOM AT 5 FT ABOVE THE FINISHED FLOOR.

   C. IN AREAS OF THE BUILDING PROVIDED WITH HARD WALL AND CEILING SURFACES (SUCH AS METAL OR CONCRETE) THAT ARE FOUND TO CAUSE EXCESSIVE SOUND REFLECTIONS MAY BE PERMITTED TO HAVE A CIS SCORE LESS THAN THE MINIMUM REQUIRED VALUE IF BUILDING OCCUPANTS IN THESE AREAS CAN DETERMINE THAT A VOICE SIGNAL IS BEING BROADCAST AND THEY MUST WALK NO MORE THAN 33 FT TO FIND A LOCATION WITH AT LEAST THE MINIMUM REQUIRED CIS VALUE WITHIN THE SAME AREA.

   D. NORMALLY-UNOCCUPIED AREAS OF THE BUILDING ARE PERMITTED TO HAVE A CIS SCORE LESS THAN THE MINIMUM REQUIRED VALUE IF PERSONNEL CAN DETERMINE THAT A VOICE SIGNAL IS BEING BROADCAST AND THEY MUST WALK NO MORE THAN 50 FT TO A LOCATION WITH AT LEAST THE MINIMUM REQUIRED CIS VALUE WITHIN THE SAME AREA.

5. EXTERIOR SPEAKERS SHALL MEET A MINIMUM OF 70 DBA AND 15 DBA OVER AVERAGE AMBIENT CONDITIONS, WITH A CIS SCORE OF 0.7 AT 16 FT FROM THE SPEAKER.

6. SPEAKERS WITHIN 25 FEET OF A MICROPHONE SHALL BE INSTALLED WITH GAIN CONTROL TO PREVENT FEEDBACK.

7. STROBE SPACING FOR THE FIRE ALARM AND MASS NOTIFICATION SYSTEM SHALL BE IN ACCORDANCE WITH NFPA 72.

8. NOTIFICATION APPLIANCES ARE SHOWN IN SUGGESTED LOCATIONS TO INDICATE THE INTENT OF COVERAGE. CONTRACTOR IS RESPONSIBLE FOR PROVIDING A LAYOUT THAT MEETS ALL DESIGN CRITERIA, AND THAT IS COORDINATED WITH ALL OTHER TRADES.

GENERAL FIRE ALARM NOTES:

1. THIS SYSTEM SHALL BE A COMBINED FIRE ALARM / MASS NOTIFICATION SYSTEM.

2. THE FIRE ALARM DRAWINGS ARE SCHEMATIC IN NATURE AND SHOW A MINIMAL QUANTITY OF DEVICES. CONTRACTOR SHALL DETERMINE THE FINAL QUANTITY AND LOCATION OF ALL DEVICES IN ACCORDANCE WITH THE SPECIFICATIONS, CONTRACT DRAWINGS, AND MANUFACTURER'S WRITTEN RECOMMENDATIONS TO BE COMPLIANT WITH ALL APPLICABLE CODES AND STANDARDS. ADDITIONAL DEVICES SHALL BE PROVIDED FOR A FULLY-FUNCTIONING FIRE ALARM SYSTEM AS REQUIRED BY NFPA 72, UFC 3-600-01, UFC 3-600-10N, AND UFC 4-021-01.

3. ALL CONDUITS SHALL BE CONCEALED IN WALLS, FLOOR SLABS OR CEILINGS UNLESS OTHERWISE INDICATED. EXCEPTION: CONDUIT SHALL BE ALLOWED TO BE SURFACE MOUNTED ON WALLS AND CEILINGS IN UNFINISHED AREAS (E.G. MECHANICAL ROOM, ELECTRICAL ROOM, RISER ROOM). WHERE CONDUIT FEEDS DEVICES NOT MOUNTED DIRECTLY ON THE WALL OR CEILING, THE CONDUIT SHALL BE ROUTED AS A SINGLE, PENDENT-TYPE DROP TO EACH DEVICE.

4. ALL EXPOSED FIRE ALARM CONDUITS AND JUNCTION BOXES IN FINISHED AREAS, CONDUIT AND JUNCTION BOXES CAN BE PAINTED TO MATCH THE ROOM FINISH, THE INSIDE COVER OF THE JUNCTION BOX MUST BE IDENTIFIED AS 'FIRE ALARM' AND THE CONDUIT MUST HAVE PAINTED RED BANDS 3/4" WIDE AT 20 FOOT INTERVALS ON BOTH SIDES OF A FLOOR, WALL, OR CEILING PENETRATIONS.

5. CONDUIT SHALL BE SUPPORTED IN STRICT ACCORDANCE WITH THE NEC (E.G.10 FT INTERVALS AND 3 FT FROM TERMINATION). TENSION ONLY HANGERS ARE NOT PERMITTED (E.G. BATWINGS). TYPE OF CONDUIT UTILIZED SHALL BE IN ACCORDANCE WITH THE ELECTRICAL SPECIFICATIONS UNLESS OTHERWISE NOTED. FLEXIBLE CONDUIT IS ONLY PERMITTED FOR TERMINATION AT DEVICES MOUNTED ON PIPING OR SUBJECTED TO REMOVAL (E.G. FLOW SWITCHES, TAMPER SWITCHES, HORNS AND STROBES MOUNTED IN REMOVABLE CEILINGS).

6. NAC CONDUCTOR SIZE SHALL NOT BE LESS THAN 14 AWG, SLC AND SPEAKER CONDUCTOR SIZING SHALL NOT BE LESS THAN 16 AWG. ALL CONDUCTORS SHALL BE CONSISTENTLY COLOR COORDINATED THROUGH THE SYSTEM IN RELATION TO DEVICES THEY FEED (E.G. SLC - BLACK/RED, STROBE - YELLOW/BLUE, SPEAKER - BLACK/BROWN). ADDRESSABLE SLC CIRCUITS AND SPEAKER CIRCUITS SHALL BE PROVIDED WITH SHIELDED CONDUCTORS. SHIELDING SHALL BE GROUNDED AT ONE END OF THE CIRCUIT. ALL CIRCUITS SHALL BE PROVIDED WITH LABELING AT POINT OF TERMINATION.

7. CONDUCTORS SHALL BE RUN FROM DEVICE TO DEVICE WITHOUT SPLICES. WIRE NUTS SHALL BE PROHIBITED. TERMINAL STRIPS SHALL BE UTILIZED WHERE CONDUCTORS CANNOT BE DIRECTLY TERMINATED AT THE DEVICE (E.G. PIGTAILS OFF A HEAT DETECTOR).

8. FIRE ALARM/MASS NOTIFICATION EQUIPMENT PANELS SHALL NOT BE USED AS RACEWAY FOR ROUTING POWER WIRING OR LOW VOLTAGE WIRING. ONLY WIRING TERMINATING WITH THE PANEL SHALL BE ROUTED INTO THE PANEL. POWER WIRING AND POWER-LIMITED WIRING SHALL BE SEPARATED BY A MINIMUM OF TWO INCHES WITHIN THE EQUIPMENT PANELS.

9. MOUNTING DEVICES IN THE FACP, FSCP, NAC BOOSTER PANELS, AMP BOOSTER PANELS, AND TRANSCEIVER PANELS WHICH ARE NOT UL LISTED AS PART OF THE PANEL IS PROHIBITED.

11. ALL POWER SUPPLIES TO FACP/ACU, NAC BOOSTER PANELS, AMP BOOSTER PANELS, AND DACT PANELS SHALL BE PROVIDED WITH SPD. ALL SLC, NAC, AND IDC CIRCUITS ENTERING OR LEAVING THE BUILDING SHALL BE PROVIDED WITH TVSS. EXCEPTION: CIRCUITS TO DEVICES MOUNTED DIRECTLY ON THE EXTERIOR OF THE BUILDING DO NOT REQUIRE SPD (E.G. EXTERIOR ALARM BELL). SPD SHALL BE MOUNTED IN A SEPARATE ENCLOSURE.

12. KEY-CORES SHALL BE CORED TO THE NAS PAXTUXENT RIVER COMMON KEYCORE, CAT-45.

SYM	DESCRIPTION	DATE	APPR

NAVFAC

COMMONWEALTH OF VIRGINIA
ERIC J. SHELTON
Lic. No. 36129
3/18/16
PROFESSIONAL ENGINEER
SEAL

Wiley|Wilson | BURNS McDONNELL
JOINT VENTURE

A/E INFO

APPROVED

FOR COMMANDER NAVFAC / B.L.T.L.

ACTIVITY

SATISFACTORY TO DATE

DES EJS	DRW ERR	CHK CC

PROJECT MANAGER

IPT TECH. BRANCH HEAD

CHIEF ENG/ARCH

DEPARTMENT OF THE NAVY
NAVAL FACILITIES ENGINEERING COMMAND
WEBSTER FIELD, NAS PATUXENT RIVER

NAVAL FACILITIES ENGINEERING COMMAND ~ WASHINGTON
ST. INIGOES, MD

NAVAL AIR STATION PATUXENT RIVER
ST. INIGOES, MD

BUILDING 8008 REPAIRS, ALTERATIONS AND ADDITION

FIRE ALARM SYMBOLS, LEGEND AND ABBREVIATIONS

SCALE: AS NOTED
EPROJECT NO. 1183080
CONSTR. CONTR. NO. N40080-15-D-0452
NAVFAC DRAWING NO. 13078391
SHEET 107 OF 180

FA001

DRAWFORM REVISION: 10 MAY 2014

FILE NAME: C:\Revit_Projects\86314-Building8008\Models\MEP\86314_F_drrakes.rvt
REVDATE: 3/18/2016 9:30:18 AM

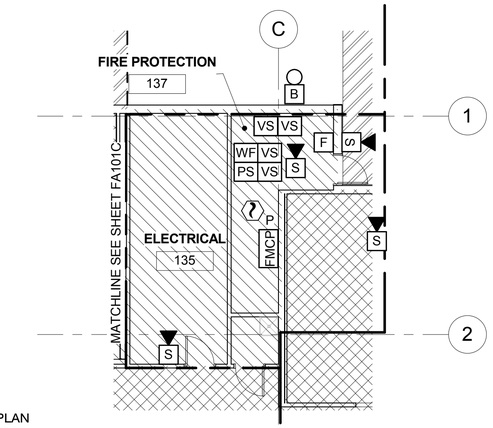

PLAN NORTH

PARTIAL FIRE ALARM PLAN - PHASE 1

SCALE: 1/8" = 1'-0"

WORK NOTES:

1. DUCT SMOKE DETECTOR FOR RTU-1 SHUTDOWN. REFER TO MECHANICAL DRAWINGS FOR EXACT LOCATION.
2. ADDRESSABLE OUTPUT MODULE FOR RTU-1 SHUTDOWN. LOCATE MODULE WITHIN THE HEATED ENVELOPE OF THE BUILDING.
3. DUCT SMOKE DETECTOR FOR RTU-2 SHUTDOWN. REFER TO MECHANICAL DRAWINGS FOR EXACT LOCATION.
4. ADDRESSABLE OUTPUT MODULE FOR RTU-2 SHUTDOWN. LOCATE MODULE WITHIN THE HEATED ENVELOPE OF THE BUILDING.
5. DUCT SMOKE DETECTOR FOR RTU-3 SHUTDOWN. REFER TO MECHANICAL DRAWINGS FOR EXACT LOCATION.
6. ADDRESSABLE OUTPUT MODULE FOR RTU-3 SHUTDOWN. LOCATE MODULE WITHIN THE HEATED ENVELOPE OF THE BUILDING.
7. DUCT SMOKE DETECTOR FOR RTU-7 SHUTDOWN. REFER TO MECHANICAL DRAWINGS FOR EXACT LOCATION.
8. ADDRESSABLE OUTPUT MODULE FOR RTU-7 SHUTDOWN. LOCATE MODULE WITHIN THE HEATED ENVELOPE OF THE BUILDING.
9. DUCT SMOKE DETECTOR FOR DOAS-3 SHUTDOWN. REFER TO MECHANICAL DRAWINGS FOR EXACT LOCATION.
10. ADDRESSABLE OUTPUT MODULE FOR DOAS-3 SHUTDOWN. LOCATE MODULE WITHIN THE HEATED ENVELOPE OF THE BUILDING.

GENERAL NOTES:

1. REFER TO FA001 FOR GENERAL NOTES, DESIGN CRITERIA, ABBREVIATIONS AND SYMBOLS.

FIRE ALARM HATCH LEGEND

PROVIDE SPEAKER(S) AND ALERT STROBES TO ACHIEVE DESIGN CRITERIA

PROVIDE SPEAKER(S) AS REQUIRED TO ACHIEVE DESIGN CRITERIA

PROVIDE WEATHERPROOF WALL MOUNTED SPEAKER(S) AS REQUIRED TO ACHIEVE DESIGN CRITERIA

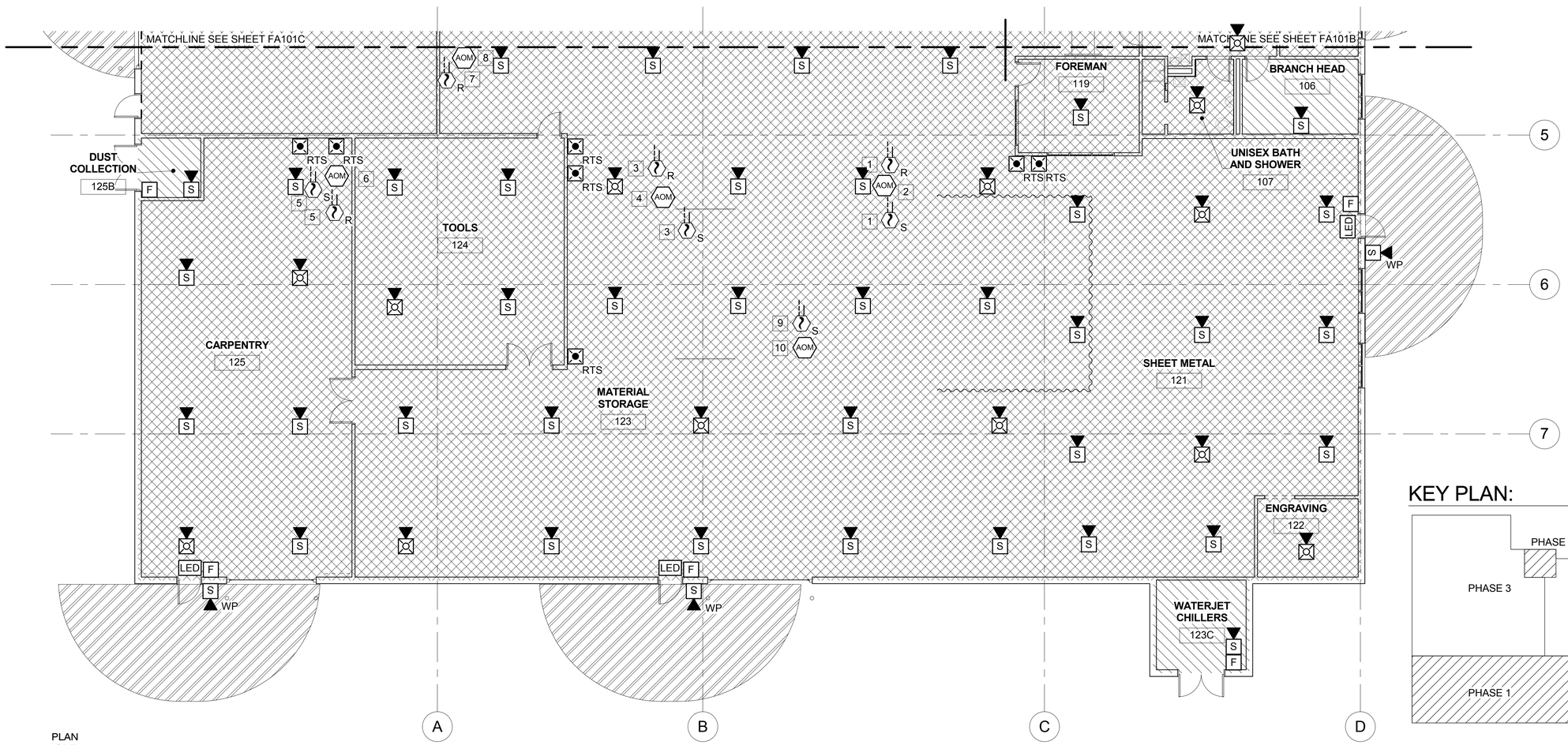

PLAN NORTH

FIRE ALARM FLOOR PLAN - PHASE 1

SCALE: 1/8" = 1'-0"

KEY PLAN:

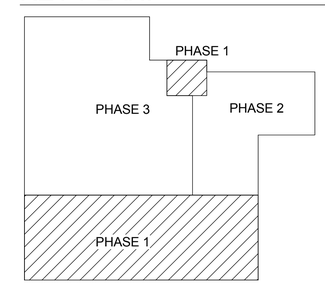

GRAPHIC SCALE:

1/8" =1'-0" 0' 4' 8' 16'

SYM	DESCRIPTION	DATE	APPR

NAVFAC

COMMONWEALTH OF VIRGINIA — ERIC J. SHELTON — Lic. No. 36129 — 3/18/16 — PROFESSIONAL ENGINEER — SEAL

Wiley|Wilson | BURNS McDONNELL — JOINT VENTURE

A/E INFO

APPROVED

FOR COMMANDER NAVFAC / B.L.T.L.

ACTIVITY

SATISFACTORY TO DATE

DES	EJS	DRW	ERR	CHK	CC

PROJECT MANAGER

IPT TECH. BRANCH HEAD

CHIEF ENG/ARCH

DEPARTMENT OF THE NAVY
NAVAL FACILITIES ENGINEERING COMMAND
WEBSTER FIELD, NAS PATUXENT RIVER

NAVAL FACILITIES ENGINEERING COMMAND – WASHINGTON
ST. INIGOES, MD

NAVAL AIR STATION PATUXENT RIVER — ST. INIGOES, MD

BUILDING 8008 REPAIRS, ALTERATIONS AND ADDITION

FIRE ALARM FLOOR PLAN - PHASE 1

SCALE: AS NOTED

EPROJECT NO. 1183080

CONSTR. CONTR. NO. N40080-15-D-0452

NAVFAC DRAWING NO. 13078392

SHEET 108 OF 180

FA101A

DRAWFORM REVISION: 10 MAY 2014

FILE NAME: C:\Revit_Projects\86314-Building8008\Models\MEP\86314_F_drrakes.rvt

REVDATE: 3/18/2016 9:30:19 AM

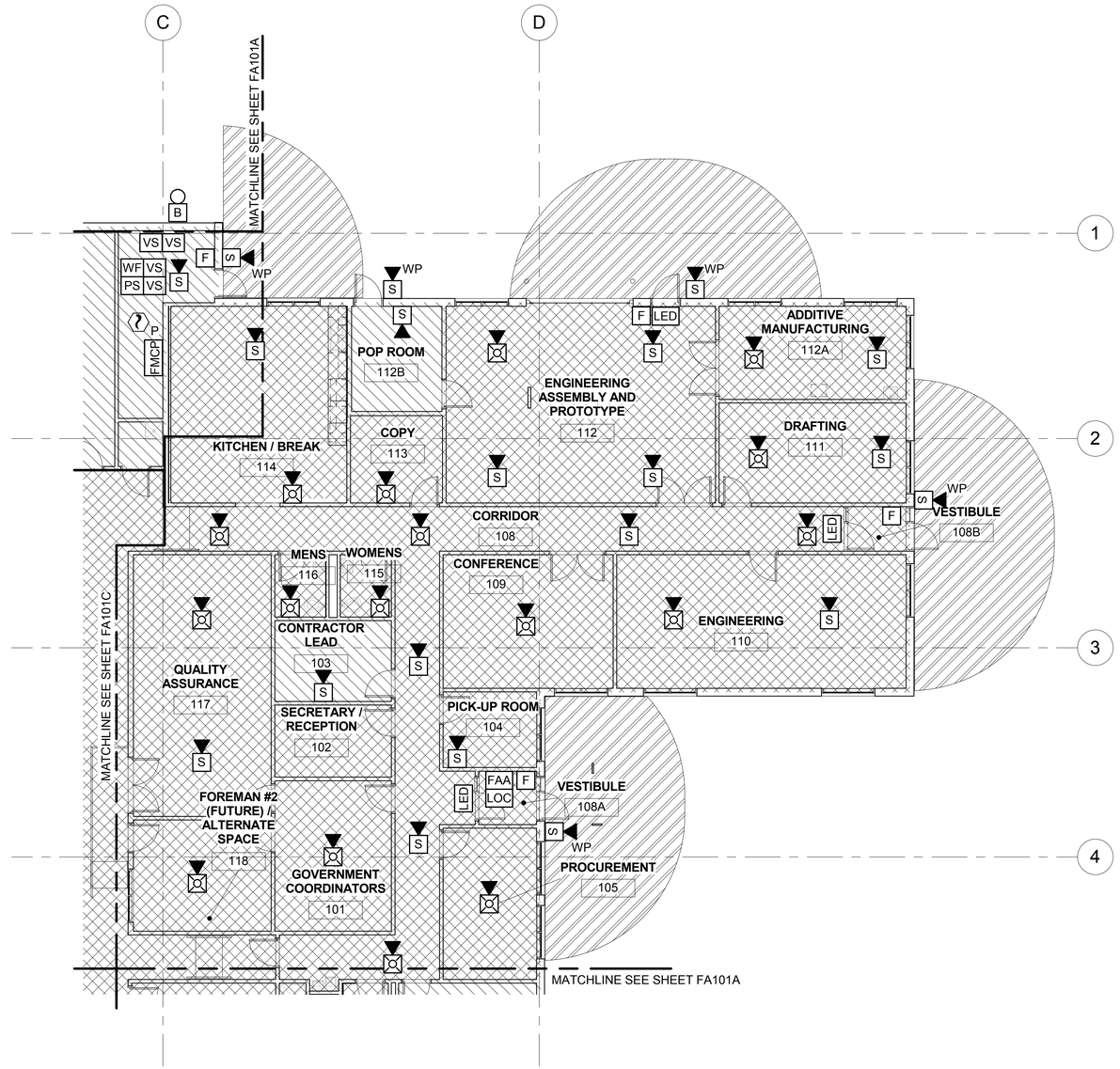

PLAN NORTH

FIRE ALARM FLOOR PLAN - PHASE 2

SCALE: 1/8" = 1'-0"

GENERAL NOTES:

1. REFER TO FA001 FOR GENERAL NOTES, DESIGN CRITERIA, ABBREVIATIONS AND SYMBOLS.

FIRE ALARM HATCH LEGEND

- PROVIDE SPEAKER(S) AND ALERT STROBES TO ACHIEVE DESIGN CRITERIA
- PROVIDE SPEAKER(S) AS REQUIRED TO ACHIEVE DESIGN CRITERIA
- PROVIDE WEATHERPROOF WALL MOUNTED SPEAKER(S) AS REQUIRED TO ACHIEVE DESIGN CRITERIA

KEY PLAN:

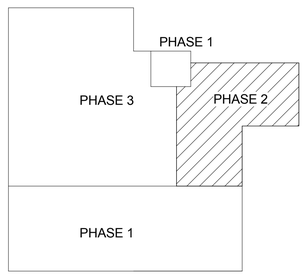

GRAPHIC SCALE:

1/8" =1'-0" 0' 4' 8' 16'

SYM	DESCRIPTION	DATE	APPR

NAVFAC

COMMONWEALTH OF VIRGINIA
ERIC J. SHELTON
Lic. No. 36129
3/18/16
PROFESSIONAL ENGINEER
SEAL

Wiley|Wilson | BURNS McDONNELL
JOINT VENTURE

A/E INFO

APPROVED
FOR COMMANDER NAVFAC / B.L.T.L.

ACTIVITY

SATISFACTORY TO DATE

DES EJS	DRW ERR	CHK CC

PROJECT MANAGER
IPT TECH. BRANCH HEAD
CHIEF ENG/ARCH

DEPARTMENT OF THE NAVY
NAVAL FACILITIES ENGINEERING COMMAND
WEBSTER FIELD, NAS PATUXENT RIVER

NAVAL FACILITIES ENGINEERING COMMAND ~ WASHINGTON
ST. INIGOES, MD

NAVAL AIR STATION PATUXENT RIVER
ST. INIGOES, MD

BUILDING 8008 REPAIRS, ALTERATIONS AND ADDITION

FIRE ALARM FLOOR PLAN - PHASE 2

SCALE: AS NOTED
EPROJECT NO. 1183080
CONSTR. CONTR. NO. N40080-15-D-0452
NAVFAC DRAWING NO. 13078393
SHEET 109 OF 180
FA101B

DRAWFORM REVISION: 10 MAY 2014

FILE NAME: C:\Revit_Projects\86314-Building8008\Models\MEP\86314_F_dfrakes.rvt
REVDATE: 3/18/2016 9:30:20 AM

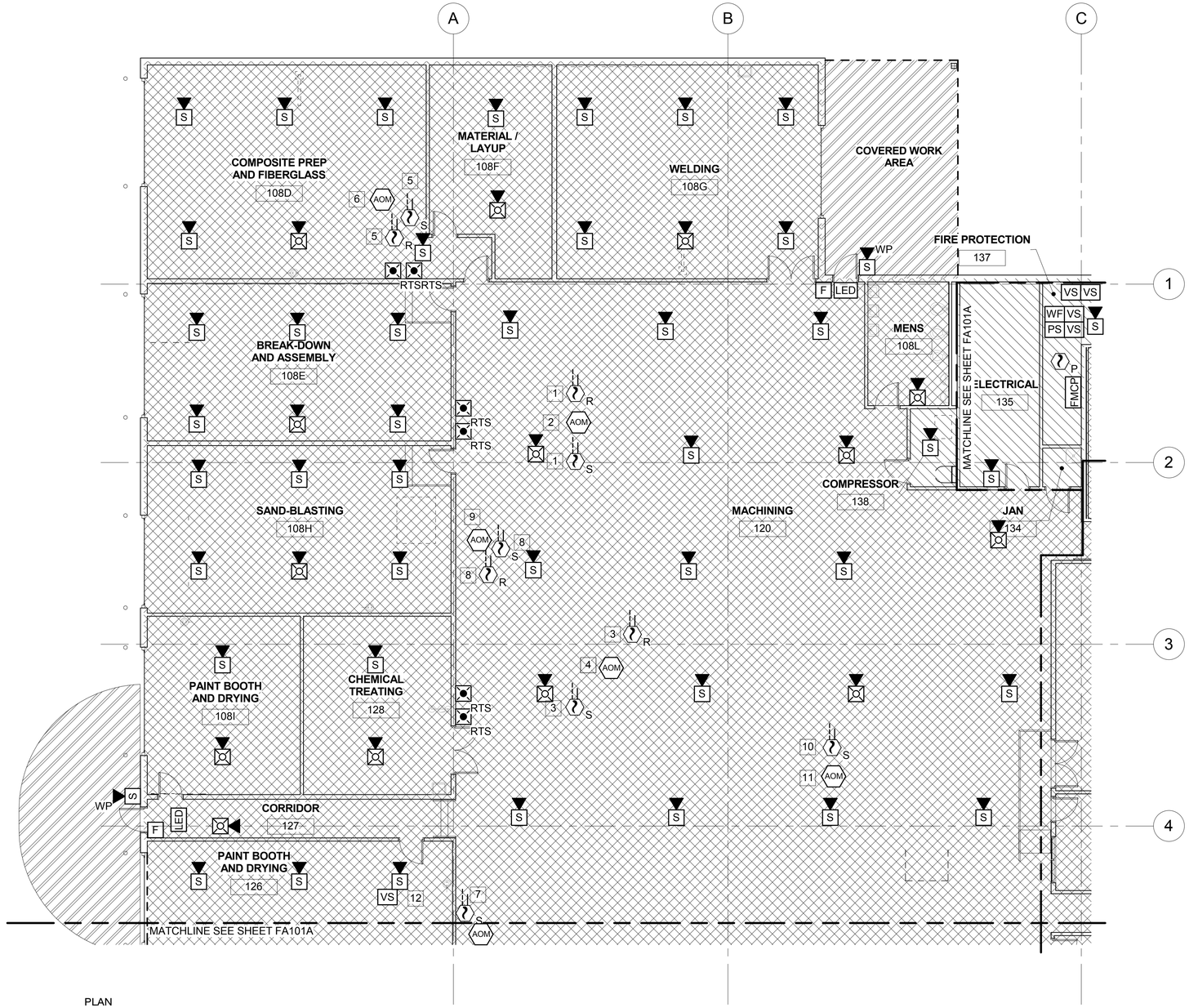

PLAN NORTH

FIRE ALARM FLOOR PLAN - PHASE 3

SCALE: 1/8" = 1'-0"

GENERAL NOTES:

1. REFER TO FA001 FOR GENERAL NOTES, DESIGN CRITERIA, ABBREVIATIONS AND SYMBOLS.

WORK NOTES:

1. DUCT SMOKE DETECTOR FOR RTU-4 SHUTDOWN. REFER TO MECHANICAL DRAWINGS FOR EXACT LOCATION.
2. ADDRESSABLE OUTPUT MODULE FOR RTU-4 SHUTDOWN. LOCATE MODULE WITHIN THE HEATED ENVELOPE OF THE BUILDING.
3. DUCT SMOKE DETECTOR FOR RTU-5 SHUTDOWN. REFER TO MECHANICAL DRAWINGS FOR EXACT LOCATION.
4. ADDRESSABLE OUTPUT MODULE FOR RTU-5 SHUTDOWN. LOCATE MODULE WITHIN THE HEATED ENVELOPE OF THE BUILDING.
5. DUCT SMOKE DETECTOR FOR RTU-6 SHUTDOWN. REFER TO MECHANICAL DRAWINGS FOR EXACT LOCATION.
6. ADDRESSABLE OUTPUT MODULE FOR RTU-6 SHUTDOWN. LOCATE MODULE WITHIN THE HEATED ENVELOPE OF THE BUILDING.
7. DUCT SMOKE DETECTOR FOR RTU-7 SHUTDOWN. REFER TO MECHANICAL DRAWINGS FOR EXACT LOCATION.
8. DUCT SMOKE DETECTOR FOR RTU-8 SHUTDOWN. REFER TO MECHANICAL DRAWINGS FOR EXACT LOCATION.
9. ADDRESSABLE OUTPUT MODULE FOR RTU-8 SHUTDOWN. LOCATE MODULE WITHIN THE HEATED ENVELOPE OF THE BUILDING.
10. DUCT SMOKE DETECTOR FOR DOAS-2 SHUTDOWN. REFER TO MECHANICAL DRAWINGS FOR EXACT LOCATION.
11. ADDRESSABLE OUTPUT MODULE FOR DOAS-2 SHUTDOWN. LOCATE MODULE WITHIN THE HEATED ENVELOPE OF THE BUILDING.
12. TAMPER SWITCH FOR PAINT SPRAY BOOTH SPRINKLER ISOLATION VALVE. SEE SPRINKLER DRAWINGS FOR EXACT LOCATION.

FIRE ALARM HATCH LEGEND

PROVIDE SPEAKER(S) AND ALERT STROBES TO ACHIEVE DESIGN CRITERIA

PROVIDE SPEAKER(S) AS REQUIRED TO ACHIEVE DESIGN CRITERIA

PROVIDE WEATHERPROOF WALL MOUNTED SPEAKER(S) AS REQUIRED TO ACHIEVE DESIGN CRITERIA

KEY PLAN:

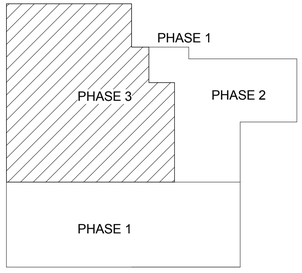

GRAPHIC SCALE:

1/8" =1'-0" 0' 4' 8' 16'

SYM	DESCRIPTION	DATE	APPR

NAVFAC

COMMONWEALTH OF VIRGINIA
ERIC J. SHELTON
Lic. No. 36129
3/18/16
PROFESSIONAL ENGINEER
SEAL

Wiley|Wilson | BURNS McDONNELL
JOINT VENTURE

A/E INFO

APPROVED
FOR COMMANDER NAVFAC / B.L.T.L

ACTIVITY

SATISFACTORY TO DATE

DES	EJS	DRW	ERR	CHK	CC

PROJECT MANAGER
IPT TECH. BRANCH HEAD
CHIEF ENG/ARCH

DEPARTMENT OF THE NAVY
NAVAL FACILITIES ENGINEERING COMMAND
WEBSTER FIELD, NAS PATUXENT RIVER
NAVAL FACILITIES ENGINEERING COMMAND ~ WASHINGTON
ST. INIGOES, MD
NAVAL AIR STATION PATUXENT RIVER
ST. INIGOES, MD
BUILDING 8008 REPAIRS, ALTERATIONS AND ADDITION
FIRE ALARM FLOOR PLAN - PHASE 3

SCALE: AS NOTED
EPROJECT NO. 1183080
CONSTR. CONTR. NO. N40080-15-D-0452
NAVFAC DRAWING NO. 13078394
SHEET 110 OF 180
FA101C

DRAWFORM REVISION: 10 MAY 2014

FILE NAME: C:\Revit_Projects\86314-Building8008\Models\MEP\86314_F_dtrakes.rvt
REVDATE: 3/18/2016 9:30:21 AM

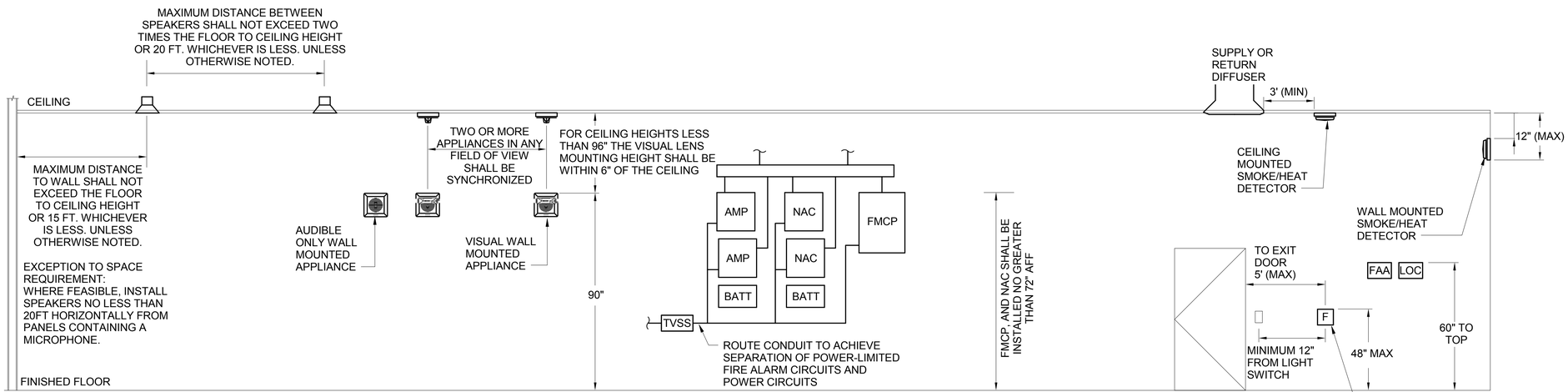

PLAN NORTH

TYPICAL DEVICE MOUNTING DETAIL

SCALE: 12" = 1'-0"

SYM	DESCRIPTION	DATE	APPR

NAVFAC

COMMONWEALTH OF VIRGINIA
ERIC J. SHELTON
Lic. No. 36129
3/18/16
PROFESSIONAL ENGINEER
SEAL

Wiley|Wilson | BURNS McDONNELL
JOINT VENTURE

A/E INFO.

APPROVED

FOR COMMANDER NAVFAC / B.L.T.L.

ACTIVITY

SATISFACTORY TO DATE

DES	EJS	DRW	ERR	CHK	CC

PROJECT MANAGER
IPT TECH. BRANCH HEAD
CHIEF ENG/ARCH

DEPARTMENT OF THE NAVY
NAVAL FACILITIES ENGINEERING COMMAND
WEBSTER FIELD, NAS PATUXENT RIVER

NAVAL FACILITIES ENGINEERING COMMAND ~ WASHINGTON
ST. INIGOES, MD

NAVAL AIR STATION PATUXENT RIVER
ST. INIGOES, MD

BUILDING 8008 REPAIRS, ALTERATIONS AND ADDITION

FIRE ALARM DETAILS

SCALE: AS NOTED
EPROJECT NO. 1183080
CONSTR. CONTR. NO. N40080-15-D-0452
NAVFAC DRAWING NO. 13078395
SHEET 111 OF 180

FA501

DRAWFORM REVISION: 10 MAY 2014

FILE NAME: C:\Revit_Projects\86314-Building8008\Models\MEP\86314_F_drrakes.rvt
REVDATE: 3/18/2016 9:30:21 AM

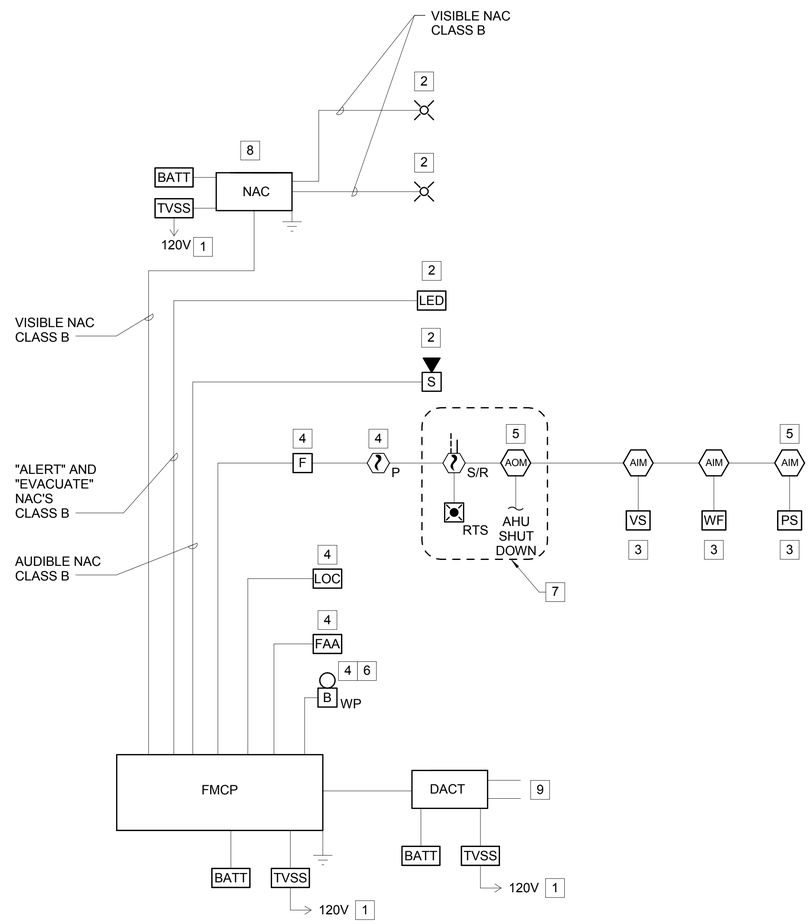

A2 FIRE ALARM RISER
SCALE: NOT TO SCALE

GENERAL NOTES:

1. REFER TO THE FIRE ALARM LEGEND FOR GENERAL NOTES, DESIGN CRITERIA, ABBREVIATIONS, AND SYMBOLS.
2. THE FIRE ALARM RISER SHOWS THE INTENT OF THE FIRE ALARM INFRASTRUCTURE. NOT ALL DEVICES ARE SHOWN. CONTRACTOR SHALL PROVIDE THE QUANTITY OF DEVICES AS REQUIRED TO COMPLY WITH NFPA 72, UFC 3-600-01, UFC 3-600-10N, 4-021-01, AND CONTRACT DOCUMENTS.
3. EACH FLOW AND TAMPER SWITCH SHALL REPORT BACK TO THE FIRE ALARM CONTROL PANEL WITH A SEPARATE ADDRESS. GROUPED SWITCHES ON ONE ADDRESS ARE NOT ACCEPTABLE.
4. WHERE AN ADDRESSABLE INPUT MODULE IS UTILIZED, PROVIDE AN END-OF-LINE RESISTOR TO MONITOR THE INTEGRITY OF THE CLASS B CIRCUIT TO THE CONVENTIONAL DEVICE.

NEW WORK NOTES:

1. CIRCUIT BREAKER SHALL BE LABELED "FIRE ALARM." POWER CIRCUITS SHALL MEET UFC 3-520-01, 3-2.7.
2. QUANTITY AND LOCATION BY CONTRACTOR'S DESIGN TO MEET DESIGN CRITERIA.
3. REFER TO CONTRACTOR'S FIRE SUPPRESSION DRAWINGS FOR QUANTITY AND / OR LOCATIONS OF DEVICE(S).
4. REFER TO FIRE ALARM PLANS FOR QUANTITY AND / OR LOCATIONS OF DEVICE(S).
5. PROVIDE ADDRESSABLE INPUT AND OUTPUT MODULE (S) AS REQUIRED TO ACHIEVE THE FUNCTIONALITY INDICATED IN THE FIRE ALARM MATRIX.
6. EXTERIOR BELL OVER FDC.
7. PROVIDE SUPPLY AND RETURN DUCT SMOKE DETECTORS AND DIRECT SHUT DOWN FOR THE FOLLOWING UNITS: RTU-1, RTU-2, RTU-3, RTU-4.
8. ADDITIONAL BOOSTER PANELS SHALL BE PROVIDED AS REQUIRED PER CONTRACTOR'S DESIGN. WHERE ADDITIONAL BOOSTER PANELS ARE REQUIRED, THEY SHALL BE LOCATED IN THE FIRE PROTECTION ROOM ADJACENT TO THE FMCP.
9. CONNECT DACT TO TWO DEDICATED TELEPHONE LINES.

SYM	DESCRIPTION	DATE	APPR

NAVFAC

COMMONWEALTH OF VIRGINIA
ERIC J. SHELTON
Lic. No. 36129
3/18/16
PROFESSIONAL ENGINEER
SEAL

Wiley|Wilson | BURNS McDONNELL
JOINT VENTURE

A/E INFO

APPROVED
FOR COMMANDER NAVFAC / B.L.T.L.

ACTIVITY

SATISFACTORY TO DATE

DES	EJS	DRW	ERR	CHK	CC

PROJECT MANAGER
IPT TECH. BRANCH HEAD
CHIEF ENG/ARCH

DEPARTMENT OF THE NAVY
NAVAL FACILITIES ENGINEERING COMMAND
WEBSTER FIELD, NAS PATUXENT RIVER
NAVAL FACILITIES ENGINEERING COMMAND ~ WASHINGTON
ST. INIGOES, MD
NAVAL AIR STATION PATUXENT RIVER
ST. INIGOES, MD
BUILDING 8008 REPAIRS, ALTERATIONS AND ADDITION
FIRE ALARM RISER

SCALE: AS NOTED
EPROJECT NO. 1183080
CONSTR. CONTR. NO. N40080-15-D-0452
NAVFAC DRAWING NO. 13078396
SHEET 112 OF 180
FA601

DRAWFORM REVISION: 10 MAY 2014

FILE NAME: C:\Revit_Projects\86314-Building8008\Models\MEP\86314_F_dirrakes.rvt
REVDATE: 3/18/2016 9:30:22 AM

FIRE ALARM / MNS SYSTEM MESSAGES

PROVIDE THE FOLLOWING MESSAGES:

1. FIRE MESSAGE - "MAY I HAVE YOUR ATTENTION PLEASE? MAY I HAVE YOUR ATTENTION PLEASE? A FIRE EMERGENCY HAS BEEN REPORTED IN THE BUILDING. PLEASE LEAVE THE BUILDING BY THE NEAREST EXIT (PROVIDE A 2 SECOND PAUSE.) "MAY I HAVE YOUR ATTENTION PLEASE, (REPEAT THE MESSAGE)."
2. SEVERE WEATHER - "MAY I HAVE YOUR ATTENTION PLEASE? MAY I HAVE YOUR ATTENTION PLEASE? A SEVERE WEATHER WARNING HAS BEEN ISSUED FOR NAVAL AIR STATION PATUXENT RIVER. TAKE APPROPRIATE ACTION AND TUNE IN TO THE LOCAL RADIO OR TELEVISION STATIONS FOR THE LATEST UPDATES."
3. ACTIVE SHOOTER - "MAY I HAVE YOUR ATTENTION PLEASE? MAY I HAVE YOUR ATTENTION PLEASE? A SHOOTER HAS BEEN REPORTED ON BASE. ALL PERSONNEL SHOULD REMAIN CALM AND STAY WHERE YOU ARE. PLEASE WAIT FOR FURTHER INSTRUCTIONS."
4. LOCKDOWN - "MAY I HAVE YOUR ATTENTION PLEASE? MAY I HAVE YOUR ATTENTION PLEASE? A FORCE PROTECTION ANTITERRORISM THREAT HAS BEEN ISSUED FOR THIS AREA. EFFECTIVE IMMEDIATELY, WE ARE OPERATING, 'SECURE AND LOCKDOWN PROCEDURES'. ALL PERSONNEL SHOULD REMAIN CALM AND STAY WHERE YOU ARE. PLEASE WAIT FOR FURTHER INSTRUCTIONS."
5. BOMB THREAT - "MAY I HAVE YOUR ATTENTION PLEASE? MAY I HAVE YOUR ATTENTION PLEASE? A BOMB THREAT ALERT HAS BEEN ISSUED FOR THIS BUILDING. ALL PERSONNEL ARE TO EVACUATE IMMEDIATELY USING THE NEAREST EXIT. FURTHER INSTRUCTIONS WILL BE ISSUED OUTSIDE THE BUILDING BY EMERGENCY RESPONSE TEAMS."
6. ALL CLEAR - "MAY I HAVE YOUR ATTENTION PLEASE? MAY I HAVE YOUR ATTENTION PLEASE? THE EMERGENCY HAS ENDED. PLEASE RESUME NORMAL OPERATIONS. THANK YOU FOR YOUR COOPERATION."
7. TEST MESSAGE - "MAY I HAVE YOUR ATTENTION PLEASE? MAY I HAVE YOUR ATTENTION PLEASE? THIS IS A TEST OF THE MASS NOTIFICATION SYSTEM. REPEAT, THIS IS ONLY A TEST."

FIRE ALARM CONTROL PANEL (FACP) FUNCTIONAL MATRIX

	ANNUNCIATION AT LOCAL PANEL				NOTIFICATION									AUXILIARY FUNCTION	
ALARM CONDITIONS	AUDIO-VISUAL FIRE ALARM INDICATION BY DEVICE	AUDIO-VISUAL TROUBLE INDICATION BY DEVICE	AUDIO-VISUAL SUPERVISORY INDICATION BY DEVICE	MNS SUPERVISORY FIRE ALARM OVERRIDE CONDITION AT ACU (NOTE 4)	COMMON FIRE ALARM SIGNAL TO FIRE DEPARTMENT	COMMON TROUBLE SIGNAL TO FIRE DEPARTMENT	COMMON SUPERVISORY CONDITION TO FIRE DEPARTMENT	"SUPERVISORY - MNS" CONDITION TO FIRE DEPARTMENT	FIRE ALARM ANNOUNCEMENT	"ALERT" VISUAL NOTIFICATION	MASS NOTIFICATION ANNOUNCEMENT	ILLUMINATE LED TEXT MESSAGE SIGNS "EVACUATE"	ILLUMINATE LED TEXT MESSAGE SIGNS "ANNOUNCEMENT" (NOTE 3)	SHUT DOWN ASSOCIATED AIR HANDLING EQUIPMENT	
MANUAL FIRE ALARM STATIONS	X				X				X	X		X			
SMOKE DETECTOR OVER FMCP AND NAC PANELS	X				X				X	X		X			
IN-DUCT SMOKE DETECTORS	X				X				X	X		X		X	
FLOW SWITCHES - WET-PIPE SYSTEM	X				X				X	X		X			
FLOW SWITCHES - DRY-PIPE SYSTEM	X				X				X	X		X			
TROUBLE CONDITIONS															
AC POWER FAILURE		X				X									
LOW BATTERY		X				X									
OPEN CIRCUIT FAULT		X				X									
GROUND FAULT		X				X									
NOTIFICATION APPLIANCE CIRCUIT SHORT		X				X									
REPORTING PHONE LINE CONNECTION NOT FUNCTIONAL		X				X									
COMPONENT COMMON TROUBLE		X				X									
SUPERVISORY CONDITIONS															
SPRINKLER VALVE TAMPER SWITCH			X				X								
DRY-PIPE SYSTEM HI/LO AIR PRESSURE			X				X								
MASS NOTIFICATION INPUTS															
ACU/LOC EMERGENCY LIVE PAGING (NOTE 1) OR ACU/LOC EMERGENCY PRE-RECORDED MESSAGE SELECT (NOTES 1, 2)				X				X		X	X		X		
ACU/LOC NON-EMERGENCY PRE-RECORDED MESSAGE SELECT (NOTES 1, 2)											X				
ACU/LOC PRE-RECORDED "ALL CLEAR"				X							X		X		
NON-EMERGENCY LIVE PAGING											X				

NOTES:

1. EMERGENCY MNS MESSAGES (LIVE & PRE-RECORDED) SHALL TEMPORARILY OVERRIDE FIRE ALARM AUDIBLE EVACUATION AND STROBES SHALL REMAIN ACTIVATED.
2. PRE-RECORDED MNS MESSAGES SHALL REPEAT FOR 10 MINUTES OR UNTIL MANUALLY RESET.
3. "ANNOUNCEMENT" MESSAGE ON TEXT SIGNS SHALL STAY ILLUMINATED FOR 10 SECONDS BEYOND THE END OF THE MESSAGE.
4. SUPERVISORY CONDITION ONLY OCCURS WHEN MNS SYSTEM IS OVERRIDING FIRE ALARM EVACUATION (ALARM CONDITION).

SYM	DESCRIPTION	DATE	APPR

NAVFAC

COMMONWEALTH OF VIRGINIA
ERIC J. SHELTON
Lic. No. 36129
3/18/16
PROFESSIONAL ENGINEER
SEAL

Wiley|Wilson | BURNS McDONNELL
JOINT VENTURE

A/E INFO

APPROVED
FOR COMMANDER NAVFAC / B.L.T.L.

ACTIVITY

SATISFACTORY TO DATE

DES EJS	DRW ERR	CHK CC

PROJECT MANAGER
IPT TECH. BRANCH HEAD
CHIEF ENG/ARCH

DEPARTMENT OF THE NAVY
NAVAL FACILITIES ENGINEERING COMMAND
WEBSTER FIELD, NAS PATUXENT RIVER
NAVAL FACILITIES ENGINEERING COMMAND ~ WASHINGTON
ST. INIGOES, MD
NAVAL AIR STATION PATUXENT RIVER
ST. INIGOES, MD
BUILDING 8008 REPAIRS, ALTERATIONS AND ADDITION
FIRE ALARM MATRIX

SCALE: AS NOTED
EPROJECT NO. 1183080
CONSTR. CONTR. NO. N40080-15-D-0452
NAVFAC DRAWING NO. 13078397
SHEET 113 OF 180
FA602

DRAWFORM REVISION: 10 MAY 2014

FILE NAME: C:\Revit_Projects\86314_F_Central_jbanderson@burnsmcd.com.rvt
REVDATE: 5/9/2016 3:35:50 PM

FIRE SUPPRESSION LEGEND

- OUTSIDE SCREW AND YOKE VALVE (OS&Y)
- VALVE
- BACKFLOW PREVENTER RPZ TYPE
- CHECKVALVE
- PIPE CAP
- FIRE DEPARTMENT CONNECTION
- PRESSURE GAUGE
- FLOW SWITCH
- POST INDICATING VALVE
- THRUST BLOCK
- RISER LOCATION

CONSTRUCTION INTERFACE

EXISTING TO REMAIN — DEMOLITION

EXISTING TO REMAIN — NEW WORK

FIRE SUPPRESSION ABBREVIATIONS

AFF	ABOVE FINISHED FLOOR
AHJ	AUTHORITY HAVING JURISDICTION
AS	AUTOMATIC SPRINKLER
NC	NORMALLY CLOSED
(S)	ELECTRICALLY SUPERVISED
SPR	SPRINKLER PIPE
SQ FT	SQUARE FOOT

DETAIL/SECTION TITLE

SECTION, DETAIL OR ELEVATION IDENTIFICATION MARK

PLATE NUMBER WHERE SECTION, DETAIL OR ELEVATION IS TAKEN

DETAIL CALLOUT SYMBOL

DETAIL NUMBER

PLATE NUMBER WHERE DETAIL IS DRAWN

SECTION CUT SYMBOL

SECTION LETTER

PLATE NUMBER WHERE SECTION IS DRAWN

VIEW SECTION

FIRE SUPPRESSION DESIGN CRITERIA

1. THE FIRE SUPPRESSION SYSTEM SHALL BE SERVED FROM THE EXISTING DOMESTIC SYSTEM. CONTRACTOR SHALL PERFORM A HYDRANT FLOW TEST, AND INCORPORATE THIS TEST INTO THE HYDRAULIC CALCULATIONS. HYDRANT FLOW TESTING SHALL BE IN ACCORDANCE WITH NFPA 291, AND THE RESULTS OF THE TESTING SHALL BE SUBMITTED AS INDICATED IN NFPA 291 FIGURE 4.11.2. 5.

   FOR INFORMATION ONLY: FLOW TEST 1 (EFFECTIVE AT THE POINT OF ENTRY INTO THE BUILDING)

DATE	08/12/2015
STATIC	108 PSI
RESIDUAL	80 PSI
FLOW	1135 GPM

2. THE FIRE SUPPRESSION SYSTEM SHALL BE DESIGNED AND INSTALLED BY A LICENSED / CERTIFIED COMPANY WHERE EMPLOYEES ARE LICENSED / CERTIFIED TO INSTALL FIRE PROTECTION EQUIPMENT IN THE STATE OF MARYLAND.
3. PIPING MATERIAL UP STREAM TO THE BACKFLOW PREVENTER SHALL BE SUITABLE FOR USE IN POTABLE WATER SYSTEMS IN COMPLIANCE WITH THE INTERNATIONAL PLUMBING CODE & LOCAL JURISDICTION.

REFERENCE STANDARDS

1. NFPA 13 (2013), STANDARD FOR THE INSTALLATION OF SPRINKLER SYSTEMS
2. NFPA 24 (2013), STANDARD FOR THE INSTALLATION OF PRIVATE SERVICE FIRE MAINS AND THEIR APPURTENANCES
3. NFPA 25 (2015), STANDARD FOR THE INSPECTION, TESTING, AND MAINTENANCE OF WATER-BASED FIRE PROTECTION SYSTEMS
4. UFC 3-600-01 (2006, WITH CHANGE 3, 2013), FIRE PROTECTION ENGINEERING FOR FACILITIES
5. UFC 3-600-10N (FINAL DRAFT, 2007), FIRE PROTECTION ENGINEERING
6. UFC 3-601-02 (2010), OPERATIONS AND MAINTENANCE: INSPECTION, TESTING, AND MAINTENANCE OF FIRE PROTECTION SYSTEMS

FIRE SUPPRESSION GENERAL NOTES

1. PROVIDE ALL NECESSARY COMPONENTS FOR WET-PIPE SYSTEMS IN ALL BUILDING INTERIOR AREAS. IN AREAS SUBJECT TO FREEZING, PROVIDE DRY-PIPE SYSTEMS. AT A MINIMUM, PROVIDE COMPONENTS AS INDICATED ON THESE DRAWINGS. CONTRACTOR SHALL PROVIDE ADDITIONAL COMPONENTS AND MODIFICATIONS AS REQUIRED TO PROVIDE A FULLY FUNCTIONING FIRE SUPPRESSION SYSTEM.
2. THE FIRE WATER SUPPLY FOR THE FIRE SUPPRESSION SYSTEMS SHALL BE FED FROM THE BASE DOMESTIC/FIRE PROTECTION WATER SYSTEM.
3. ALL COMPONENTS AND ASSEMBLIES USED IN THIS FIRE PROTECTION SYSTEM MUST BE SPECIFICALLY LISTED/APPROVED FOR THEIR INTENDED USE BY A NATIONALLY RECOGNIZED TESTING ORGANIZATION WHOSE LISTING /APPROVAL PROCESS INCLUDES FOLLOW-UP FACTORY INSPECTIONS TO ENSURE THAT PRODUCTS COMPLY WITH THE LISTING/APPROVAL CONDITION.
4. ALL SYSTEMS WHICH REQUIRE COORDINATION BETWEEN TRADES SHALL BE TO THE SATISFACTION OF THE ENGINEER AND AUTHORITY HAVING JURISDICTION. ANY DEFICIENCIES, INCONSISTENCIES, OR POORLY COORDINATED INSTALLATIONS SHALL BE CORRECTED BY THE CONTRACTOR AT NO ADDITIONAL COST.
5. FINAL DESIGN REQUIREMENTS (DEVICE QUANTITY, SIZE, AND LOCATIONS) ARE THE SOLE RESPONSIBILITY OF THE FIRE SUPRESSION CONTRACTOR. DRAWINGS INDICATE MINIMUM REQUIREMENTS; THE FIRE SUPPRESSION CONTRACTOR WILL BE RESPONSIBLE FOR VERIFYING AND COORDINATING FINAL DESIGN REQUIREMENTS WITH THESE CONSTRUCTION DOCUMENTS, SPECIFICATIONS, REFERENCE DOCUMENTS, APPLICABLE CODES, AND FACILITY USER REQUIREMENTS.
6. THE FIRE PROTECTION CONTRACTOR AWARDED THIS PROJECT SHALL BE REQUIRED TO PERFORM A HYDRANT FLOW TEST IN ACCORDANCE WITH NFPA 291 ON SITE AND SHALL BASE ALL HYDRAULIC CALCULATIONS ON THE CONTRACTOR'S FLOW TEST. THE FIRE PROTECTION CONTRACTOR SHALL NOT USE THE PRELIMINARY FLOW TEST RESULTS STATED ABOVE FOR HYDRAULIC CALCULATIONS. THE FIRE PROTECTION CONTRACTOR SHALL SUPPLY CALCULATIONS UP TO THE PRESSURE HYDRANT.
7. ALL DRAIN PENETRATIONS THRU EXTERIOR WALL SHALL BE NO GREATER THAN 2'-0" ABOVE FINISHED GRADE
8. INSTALL FIRE PROTECTION PIPE HANGERS PER THE FOLLOWING LIMITATIONS:
   A) THE SINGLE POINT DEAD LOAD APPLIED TO ANY STRUCTURALLY MEMBER SHALL NOT EXCEED 300 LBS. PROVIDE TRAPEZE HANGERS TO DISTRIBUTE THE LOAD BETWEEN STRUCTURAL MEMBERS WHERE A SINGLE HANGER EXCEEDS THE LIMITATIONS.
9. ALL VALVES INCLUDING CONTROL AND TRIM VALVES SHALL BE WITHIN 6'-0" AFF.

FIRE PROTECTION SPRINKLER SYSTEM DESIGN CRITERIA

MARK	HAZARD CLASSIFICATION	SYSTEM TYPE	DENSITY GPM/SF	REMOTE AREA SQ FT	MAXIMUM AREA PER HEAD SQ FT	HOSE DEMAND GPM	SPRINKLER CHARACTERISTICS				ADDITIONAL CODE REFERENCE	NOTES
							TEMP RATING	TYPE	K-FACTOR	FINISH		
	HAZARD CATEGORY 1 (HC-1), LIGHT HAZARD	WET	0.10	1500	225	250	ORDINARY	QUICK-RESPONSE CONCEALED	5.6 OR 8.0	WHITE	FMDS 3-26	1
	HAZARD CATEGORY 2 (HC-2) ORDINARY HAZARD	WET	0.20	2500	130	250	ORDINARY	QUICK-RESPONSE UPRIGHT	5.6 OR 8.0	BRASS	FMDS 3-26	2
	EXTRA HAZARD (GROUP2)	WET	0.40	NOTE 5	100	500	HIGH	STANDARD-RESPONSE UPRIGHT	8.0	BRASS	NFPA 13, NFPA 33	3, 4, 5
	HAZARD CATEGORY 2 (HC-2), ORDINARY HAZARD	DRY	0.20	AREA	130	250	ORDINARY	STANDARD-RESPONSE UPRIGHT	5.6 OR 8.0	BRASS	FMDS 3-26	

NOTE 1: WHERE CEILINGS ARE NOT PROVIDED USE BRASS UPRIGHT HEADS.
NOTE 2: WHERE CEILINGS ARE PRESENT USE WHITE QUICK RESPONSE CONCEALED HEADS.
NOTE 3: PAINT SPRAY BOOTH ROOMS SHALL BE CONTROLLED BY A SEPARATE, LISTED CONTROL VALVE OPERABLE FROM FLOOR LEVEL.
NOTE 4: PROVIDE SPRINKLER PROTECTION WITHIN PAINT SPRAY BOOTH EXHAUST DUCTS IN ACCORDANCE WITH NFPA 33.
NOTE 5: PER NFPA 33, 9.4.2.1, THE AREA OF APPLICATION IS NOT REQUIRED TO EXCEED THE AREA OF THE ROOM IN WHICH SPRAYING APPLICATION IS CONDUCTED.

SYM	DESCRIPTION	DATE	APPR.

NAVFAC

COMMONWEALTH OF VIRGINIA — ERIC J. SHELTON — Lic. No. 36129 — 3/18/16 — PROFESSIONAL ENGINEER — SEAL

Wiley|Wilson | BURNS McDONNELL — JOINT VENTURE

A/E INFO

APPROVED

FOR COMMANDER NAVFAC / B.L.T.L.

ACTIVITY

SATISFACTORY TO DATE

DES	EJS	DRW	ERR	CHK	CC

PROJECT MANAGER

IPT TECH. BRANCH HEAD

CHIEF ENG/ARCH

DEPARTMENT OF THE NAVY
NAVAL FACILITIES ENGINEERING COMMAND
WEBSTER FIELD, NAS PATUXENT RIVER

NAVAL FACILITIES ENGINEERING COMMAND ~ WASHINGTON
ST. INIGOES, MD

NAVAL AIR STATION PATUXENT RIVER
ST. INIGOES, MD

BUILDING 8008 REPAIRS, ALTERATIONS AND ADDITION

FIRE SUPPRESSION NOTES, LEGEND AND ABBREVIATIONS

SCALE: AS NOTED
EPROJECT NO. 1183080
CONSTR. CONTR. NO. N40080-15-D-0452
NAVFAC DRAWING NO. 13078398
SHEET 114 OF 180
FX001

DRAWFORM REVISION: 10 MAY 2014

FILE NAME: C:\Revit_Projects\86314-Building8008\Models\MEP\86314_F_drrakes.rvt
REV/DATE: 5/9/2016 1:28:38 PM

FIRE HAZARD CLASSIFICATION LEGEND

- HC-1 - 0.10 GPM/SF OVER 1500 SF
- HC-2 - 0.20 GPM/SF OVER 2500 SF
- EH-2 - 0.40 GPM/SF OVER AREA OF ROOM
- HC-2 DRY-PIPE - 0.20 GPM/SF OVER ENTIRE AREA

GENERAL NOTES:

1. REFER TO FX001 FOR GENERAL NOTES, DESIGN CRITERIA, ABBREVIATIONS AND SYMBOLS.

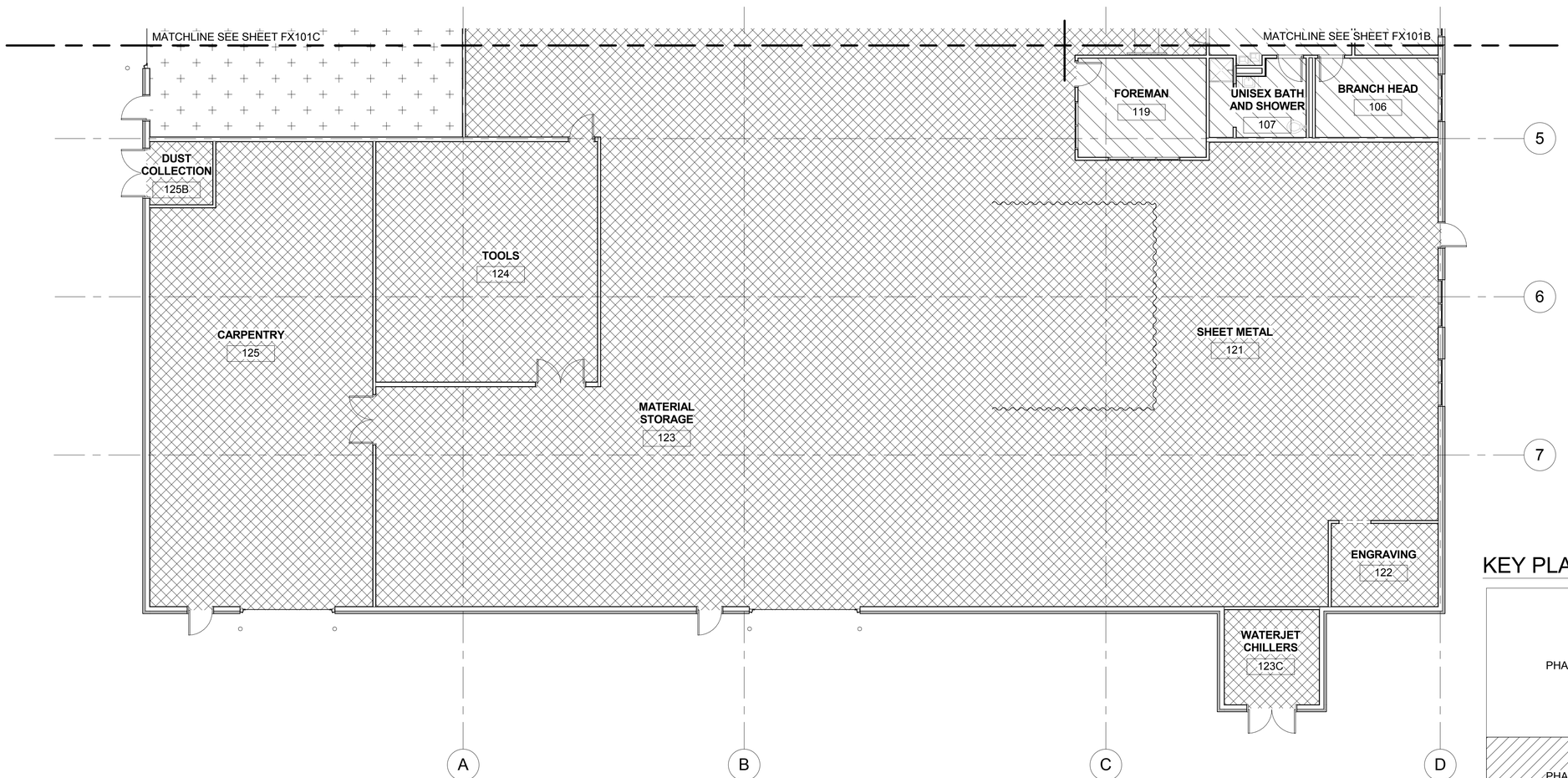

PLAN NORTH

FIRE SUPPRESSION FLOOR PLAN - PHASE 1

SCALE: 1/8" = 1'-0"

KEY PLAN:

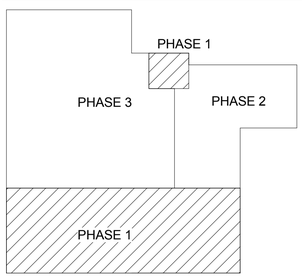

GRAPHIC SCALE:

1/8" =1'-0" 0' 4' 8' 16'

SYM	DESCRIPTION	DATE	APPR

NAVFAC

COMMONWEALTH OF VIRGINIA
ERIC J. SHELTON
Lic. No. 36129
3/18/16
PROFESSIONAL ENGINEER
SEAL

Wiley|Wilson | BURNS McDONNELL
JOINT VENTURE

A/E INFO

APPROVED
FOR COMMANDER NAVFAC / B.L.T.L

ACTIVITY

SATISFACTORY TO DATE

DES	EJS	DRW	ERR	CHK	CC

PROJECT MANAGER
IPT TECH. BRANCH HEAD
CHIEF ENG/ARCH

DEPARTMENT OF THE NAVY
NAVAL FACILITIES ENGINEERING COMMAND
WEBSTER FIELD, NAS PATUXENT RIVER
NAVAL FACILITIES ENGINEERING COMMAND ~ WASHINGTON
ST. INIGOES, MD
NAVAL AIR STATION PATUXENT RIVER
ST. INIGOES, MD

BUILDING 8008 REPAIRS, ALTERATIONS AND ADDITION

FIRE SUPPRESSION FLOOR PLAN - PHASE 1

SCALE: AS NOTED
EPROJECT NO. 1183080
CONSTR. CONTR. NO. N40080-15-D-0452
NAVFAC DRAWING NO. 13078399
SHEET 115 OF 180

FX101A

DRAWFORM REVISION: 10 MAY 2014

FILE NAME: C:\Revit_Projects\86314-Building8008\Models\MEP\86314_F_drrakes.rvt
REVDATE: 3/18/2016 9:30:24 AM

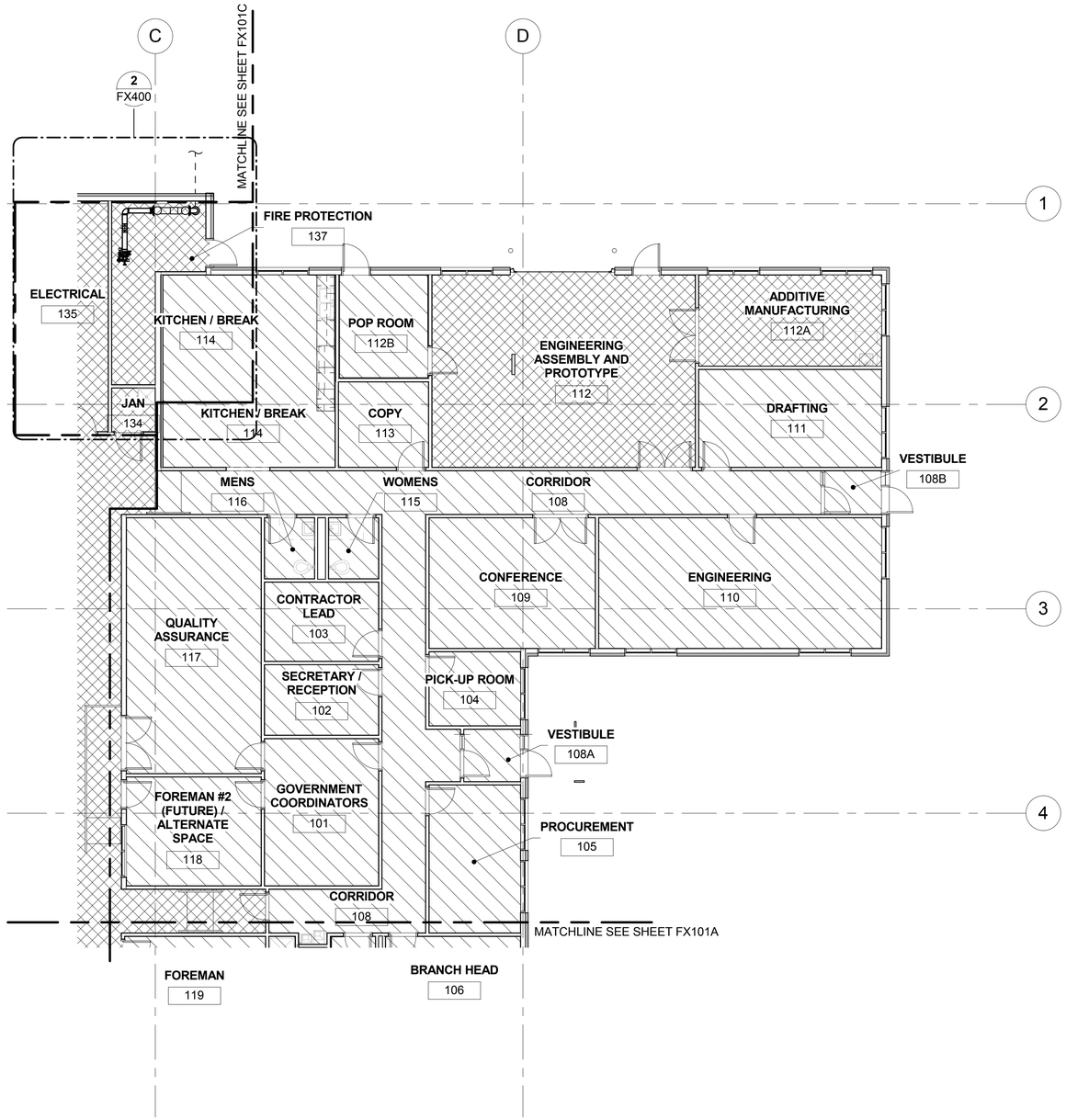

PLAN NORTH

FIRE SUPPRESSION FLOOR PLAN - PHASE 2

SCALE: 1/8" = 1'-0"

GENERAL NOTES:

1. REFER TO FX001 FOR GENERAL NOTES, DESIGN CRITERIA, ABBREVIATIONS AND SYMBOLS.

FIRE HAZARD CLASSIFICATION LEGEND

- HC-1 - 0.10 GPM/SF OVER 1500 SF
- HC-2 - 0.20 GPM/SF OVER 2500 SF
- EH-2 - 0.40 GPM/SF OVER AREA OF ROOM
- HC-2 DRY-PIPE - 0.20 GPM/SF OVER ENTIRE AREA

KEY PLAN:

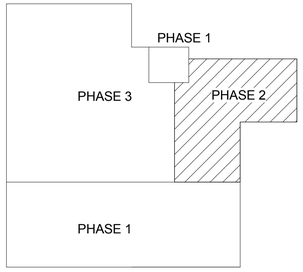

GRAPHIC SCALE:

1/8" =1'-0" 0' 4' 8' 16'

SYM	DESCRIPTION	DATE	APPR

NAVFAC

COMMONWEALTH OF VIRGINIA
ERIC J. SHELTON
Lic. No. 36129
3/18/16
PROFESSIONAL ENGINEER
SEAL

Wiley|Wilson | BURNS McDONNELL
JOINT VENTURE

A/E INFO

APPROVED
FOR COMMANDER NAVFAC / B.L.T.L.

ACTIVITY
SATISFACTORY TO DATE

DES	EJS	DRW	ERR	CHK	CC

PROJECT MANAGER
IPT TECH. BRANCH HEAD
CHIEF ENG/ARCH

DEPARTMENT OF THE NAVY
NAVAL FACILITIES ENGINEERING COMMAND
WEBSTER FIELD, NAS PATUXENT RIVER
NAVAL FACILITIES ENGINEERING COMMAND ~ WASHINGTON
ST. INIGOES, MD
NAVAL AIR STATION PATUXENT RIVER
ST. INIGOES, MD
BUILDING 8008 REPAIRS, ALTERATIONS AND ADDITION
FIRE SUPPRESSION FLOOR PLAN - PHASE 2

SCALE: AS NOTED
EPROJECT NO. 1183080
CONSTR. CONTR. NO. N40080-15-D-0452
NAVFAC DRAWING NO. 13078400
SHEET 116 OF 180
FX101B

DRAWFORM REVISION: 10 MAY 2014

FILE NAME: C:\Revit_Projects\86314-Building8008\Models\MEP\86314_F_drrakes.rvt
REVDATE: 3/18/2016 9:30:25 AM

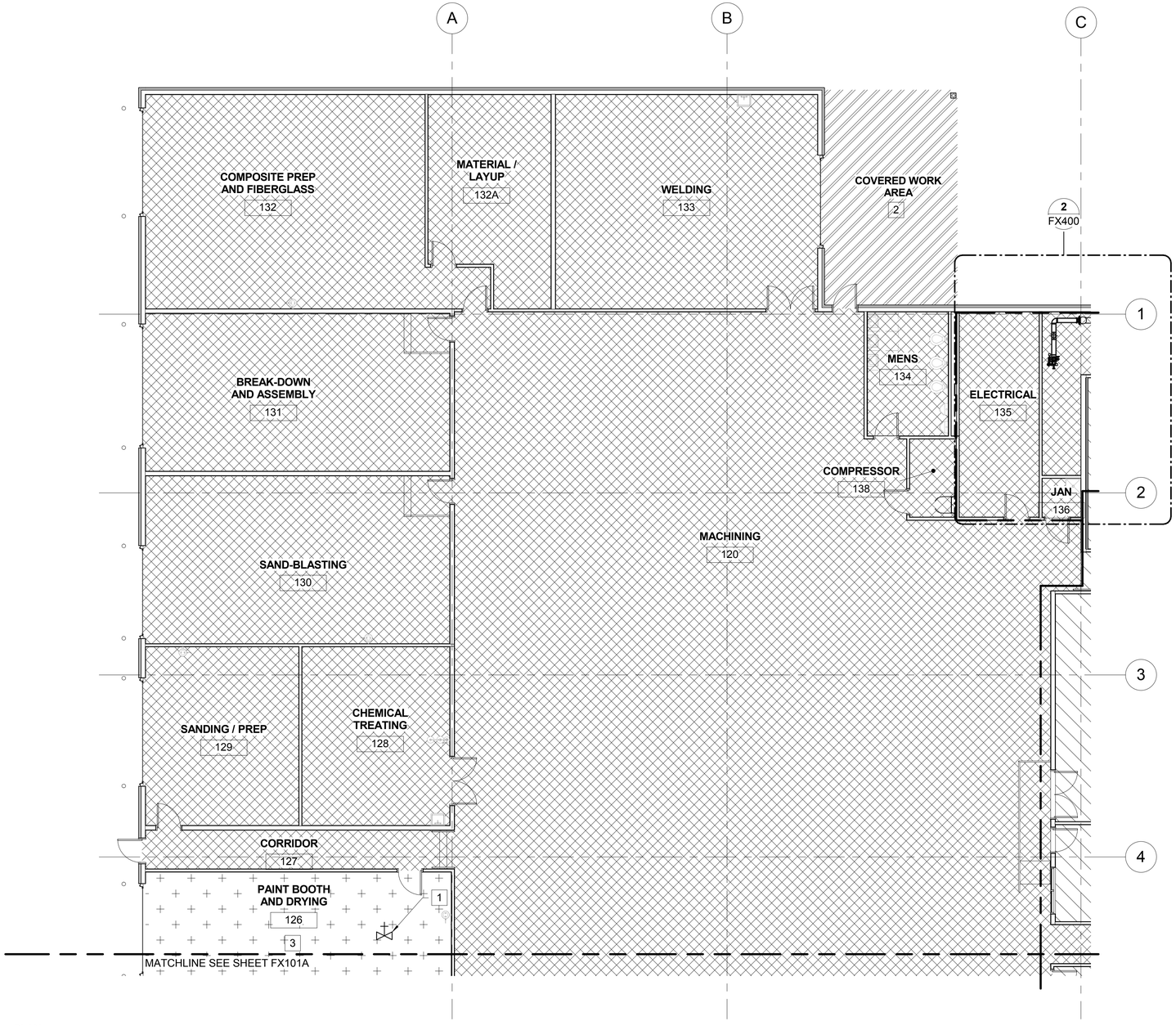

PLAN NORTH

FIRE SUPPRESSION FLOOR PLAN - PHASE 3

SCALE: 1/8" = 1'-0"

GENERAL NOTES:

1. REFER TO FX001 FOR GENERAL NOTES, DESIGN CRITERIA, ABBREVIATIONS AND SYMBOLS.

WORK NOTES

1 PROVIDE SUPERVISED CONTROL VALVE FOR SPRINKLERS IN PAINT BOOTH.

2 PROVIDE DRY-PIPE SPRINKLER SYSTEM FOR COVERED WORK AREA.

3 SPRINKLERS IN PAINT BOOTH AND DRYING ROOM SHALL BE PROTECTED BY CELLOPHANE BAGS HAVING A THICKNESS OF 0.003 IN. OR LESS OR BY THIN PAPER BAGS.

FIRE HAZARD CLASSIFICATION LEGEND

HC-1 - 0.10 GPM/SF OVER 1500 SF

HC-2 - 0.20 GPM/SF OVER 2500 SF

EH-2 - 0.40 GPM/SF OVER AREA OF ROOM

HC-2 DRY-PIPE - 0.20 GPM/SF OVER ENTIRE AREA

KEY PLAN:

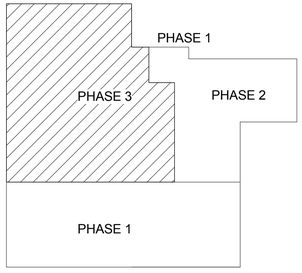

GRAPHIC SCALE:

1/8" =1'-0" 0' 4' 8' 16'

SYM	DESCRIPTION	DATE	APPR

NAVFAC

COMMONWEALTH OF VIRGINIA
ERIC J. SHELTON
Lic. No. 36129
3/18/16
PROFESSIONAL ENGINEER
SEAL

Wiley|Wilson | BURNS McDONNELL
JOINT VENTURE

A/E INFO

APPROVED
FOR COMMANDER NAVFAC / B.L.T.L

ACTIVITY

SATISFACTORY TO DATE

DES	EJS	DRW	ERR	CHK	CC

PROJECT MANAGER
IPT TECH. BRANCH HEAD
CHIEF ENG/ARCH

DEPARTMENT OF THE NAVY
NAVAL FACILITIES ENGINEERING COMMAND
WEBSTER FIELD, NAS PATUXENT RIVER
NAVAL FACILITIES ENGINEERING COMMAND ~ WASHINGTON
ST. INIGOES, MD
NAVAL AIR STATION PATUXENT RIVER
ST. INIGOES, MD
BUILDING 8008 REPAIRS, ALTERATIONS AND ADDITION
FIRE SUPPRESSION FLOOR PLAN - PHASE 3

SCALE: AS NOTED
EPROJECT NO. 1183080
CONSTR. CONTR. NO. N40080-15-D-0452
NAVFAC DRAWING NO. 13078401
SHEET 117 OF 180
FX101C

DRAWFORM REVISION: 10 MAY 2014

FILE NAME: C:\Revit_Projects\86314-Building8008\Models\MEP\86314_F_drrakes.rvt
REVDATE: 5/9/2016 1:28:40 PM

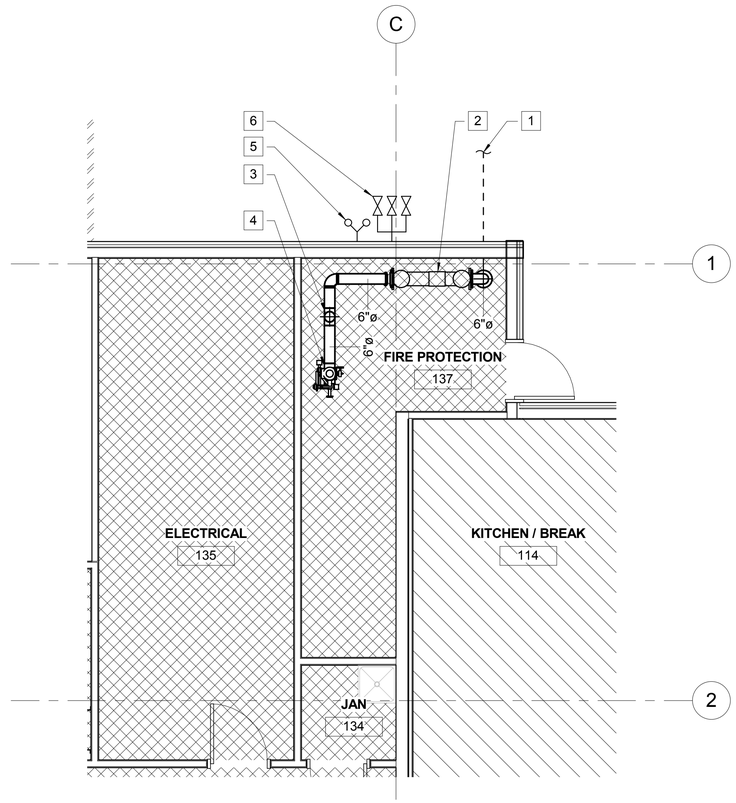

ENLARGED FIRE SUPPRESSION PLAN - PHASE 1

2 SCALE: 1/4" = 1'-0"

WORK NOTES

1. EXISTING INCOMING FIRE PROTECTION WATER SERVICE. SEE CIVIL SHEETS FOR CONTINUATION.
2. RPZ-TYPE BFP.
3. WET-PIPE SYSTEM RISER.
4. DRY-PIPE SYSTEM RISER.
5. WALL-MOUINTED FIRE DEPARTMENT CONNECTION
6. BACKFLOW PREVENTER TEST CONNECTION

FIRE HAZARD CLASSIFICATION LEGEND

- HC-1 - 0.10 GPM/SF OVER 1500 SF
- HC-2 - 0.20 GPM/SF OVER 2500 SF
- EH-2 - 0.40 GPM/SF OVER AREA OF ROOM
- HC-2 DRY-PIPE - 0.20 GPM/SF OVER ENTIRE AREA

SYM	DESCRIPTION	DATE	APPR

NAVFAC

COMMONWEALTH OF VIRGINIA
ERIC J. SHELTON
Lic. No. 36129
3/18/16
PROFESSIONAL ENGINEER
SEAL

Wiley|Wilson | BURNS McDONNELL
JOINT VENTURE

A/E INFO

APPROVED

FOR COMMANDER NAVFAC / B.L.T.L.

ACTIVITY

SATISFACTORY TO DATE

DES EJS	DRW ERR	CHK CC

PROJECT MANAGER
IPT TECH. BRANCH HEAD
CHIEF ENG/ARCH

DEPARTMENT OF THE NAVY
NAVAL FACILITIES ENGINEERING COMMAND
WEBSTER FIELD, NAS PATUXENT RIVER

NAVAL FACILITIES ENGINEERING COMMAND ~ WASHINGTON
ST. INIGOES, MD

NAVAL AIR STATION PATUXENT RIVER
ST. INIGOES, MD

BUILDING 8008 REPAIRS, ALTERATIONS AND ADDITION

ENLARGED FIRE SUPPRESSION PLAN - PHASE 1

SCALE: AS NOTED
EPROJECT NO. 1183080
CONSTR. CONTR. NO. N40080-15-D-0452
NAVFAC DRAWING NO. 13078402
SHEET 118 OF 180
FX400

DRAWFORM REVISION: 10 MAY 2014

FILE NAME: C:\Revit_Projects\86314-Building8008\Models\MEP\86314_F_drrakes.rvt
REVDATE: 3/18/2016 9:30:28 AM

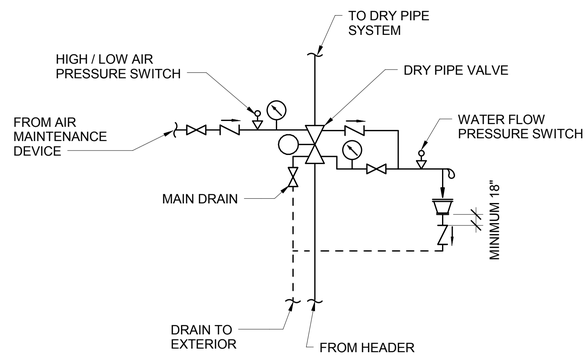

B2 DRY PIPE VALVE DETAIL
SCALE: NOT TO SCALE

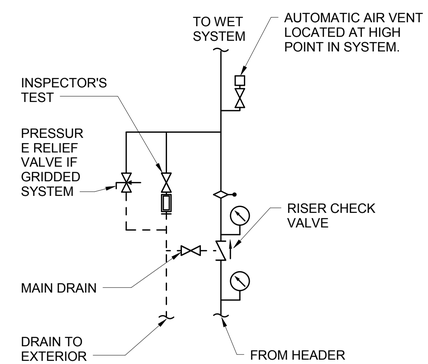

B4 WET RISER DETAIL
SCALE: NOT TO SCALE

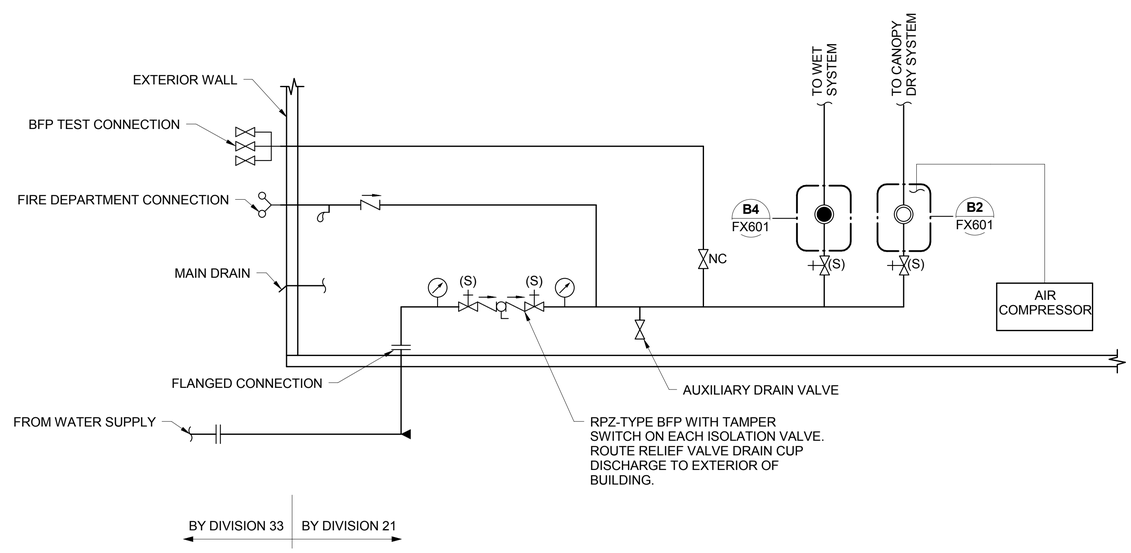

A2 SPRINKLER SYSTEM RISER DIAGRAM
SCALE: NOT TO SCALE

SYM	DESCRIPTION	DATE	APPR

NAVFAC

COMMONWEALTH OF VIRGINIA
ERIC J. SHELTON
Lic. No. 36129
3/18/16
PROFESSIONAL ENGINEER
SEAL

Wiley|Wilson | BURNS McDONNELL
JOINT VENTURE

A/E INFO

APPROVED
FOR COMMANDER NAVFAC / B.L.T.L

ACTIVITY

SATISFACTORY TO DATE

DES	EJS	DRW	ERR	CHK	CC

PROJECT MANAGER
IPT TECH. BRANCH HEAD
CHIEF ENG/ARCH

DEPARTMENT OF THE NAVY
NAVAL FACILITIES ENGINEERING COMMAND
WEBSTER FIELD, NAS PATUXENT RIVER
NAVAL FACILITIES ENGINEERING COMMAND ~ WASHINGTON
ST. INIGOES, MD
NAVAL AIR STATION PATUXENT RIVER
ST. INIGOES, MD
BUILDING 8008 REPAIRS, ALTERATIONS AND ADDITION
FIRE SUPPRESSION ONE LINE DIAGRAM

SCALE: AS NOTED
EPROJECT NO. 1183080
CONSTR. CONTR. NO. N40080-15-D-0452
NAVFAC DRAWING NO. 13078403
SHEET 119 OF 180
FX601

DRAWFORM REVISION: 10 MAY 2014

FILE NAME: C:\Revit_Projects\86314-Building8008\Models\MEP\86314_F_drrakes.rvt
REVDATE: 3/18/2016 9:30:28 AM

PLUMBING PIPING LEGEND

PHASES
- EXISTING TO REMAIN
- DEMOLITION WORK
- TEMPORARY
- NEW WORK
- POINT OF CONNECTION
- POINT OF DISCONNECT

PIPING SYSTEMS
- DCW — PIPE SYSTEM - DOMESTIC COLD
- DHW — PIPE SYSTEM - DOMESTIC HOT
- DHC — PIPE SYSTEM - DOMESTIC HOT WATER
- SAN — PIPE SYSTEM - SANITARY SEWER
- V — PIPE SYSTEM - SANITARY SEWER VENT
- STM — PIPE SYSTEM - STORM DRAIN

PIPE ACCESSORIES & FITTINGS

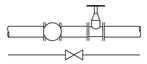
GATE VALVE

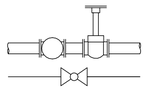
GLOBE VALVE

CHECK VALVE

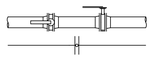
BUTTERFLY VALVE

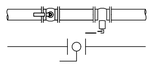
BALL VALVE

PIPE TURN UP

PIPE TURN DOWN

PIPE CONCENTRIC REDUCER

PLUMBING ABBREVIATIONS

CA	COMPRESSED AIR
CO	CLEANOUT
DCW	DOMESTIC COLD WATER
DHC	DOMESTIC HOT WATER CIRCULATION
DHW	DOMESTIC HOT WATER
DN	DOWN
EWH	ELECTRIC WATER HEATER
FCO	FLOOR CLEANOUT
HB	HOSE BIBB
OD	OVERFLOW DRAIN
SAN	SANITARY
STM	STORM DRAIN
V	VENT
VS	VENT STACK
VTR	VENT THROUGH ROOF
WCO	WALL CLEANOUT
WHA	WATER HAMMER ARRESTER

PLUMBING GENERAL NOTES

INTENT

1. THESE DRAWINGS ARE SCHEMATIC IN NATURE AND ARE NOT INTENDED TO SHOW ALL POSSIBLE CONDITIONS (DO NOT SCALE FOR LOCATIONS). IT IS INTENDED THAT A COMPLETE PLUMBING SYSTEM BE PROVIDED WITH ALL NECESSARY EQUIPMENT, APPURTENANCES AND CONTROLS. THE CONTRACTOR SHALL CAREFULLY REVIEW ALL THE CONTRACT DOCUMENTS AND COORDINATE BETWEEN ALL TRADES PRIOR TO SUBMITTING SHOP DRAWINGS. THE CONTRACTOR SHALL VERIFY ALL SIZES, MATERIALS, TEMPERATURE AND PRESSURE RATINGS BEFORE ORDERING OR INSTALLING ANY MATERIALS OR EQUIPMENT.
2. THE CONTRACTOR SHALL FIELD VERIFY ALL DIMENSIONS PRIOR TO FABRICATION OR PURCHASE OF EQUIPMENT, MATERIALS AND ASSEMBLIES. THERE MAY EXIST FIELD CONDITIONS WHICH DIFFER FROM THOSE SHOWN ON THESE DRAWINGS. ANY SUCH DEVIATIONS SHALL BE BROUGHT TO THE ATTENTION OF THE OWNER FOR RESOLUTION BEFORE PROCEEDING WITH ANY CONSTRUCTION, FABRICATION, OR MATERIAL/EQUIPMENT PURCHASE WHICH WOULD BE UNUSABLE UNDER THOSE CIRCUMSTANCES.

WORK QUALITY

1. EQUIPMENT SIZES SHOWN ARE BASED UPON TYPICAL MANUFACTURED EQUIPMENT AVAILABLE. SHOP DRAWINGS SHALL BE PROVIDED FOR REVIEW AND APPROVAL SHOWING SPACE FOR ACCESS, EGRESS, MAINTENANCE AND REQUIRED CODE CLEARANCES PRIOR TO ANY PROCUREMENT, FABRICATION OR INSTALLATION.
2. UPON COMPLETED INSTALLATION, DRINKING WATER SHALL BE TESTED FOR PH, LEAD, COPPER, AND TOTAL COLIFORMS. TESTING SHALL BE CONDUCTED PRIOR TO THE CONTRACTOR ACCEPTANCE INSPECTION.

COORDINATION WITH OTHER TRADES

1. COORDINATE THE VOLTAGE AND PHASE OF EACH PIECE OF EQUIPMENT WITH ELECTRICAL CONTRACTOR PRIOR TO ORDERING. PROVIDE WRITTEN VERIFICATION OF COORDINATION WITH ELECTRICAL CONTRACTOR PRIOR TO INSTALLATION OF EQUIPMENT.
2. COORDINATE PIPING WITH DUCTWORK, ELECTRICAL, STRUCTURAL AND FIRE PROTECTION. MAKE OFFSETS AND TRANSITIONS TO COORDINATE WITH OTHER TRADES WITHOUT ADDITIONAL EXPENSE TO THE OWNER.
3. COORDINATE THE EXACT LOCATION OF ALL ROOF OPENINGS AND SLAB PENETRATIONS WITH THE STRUCTURAL DRAWINGS PRIOR TO INSTALLATION OF PLUMBING WORK.
4. DO NOT PLACE PIPING ABOVE ELECTRICAL, COMMUNICATIONS, DATA EQUIPMENT OR ELECTRICAL PANELS.

PIPING

1. PROVIDE SUFFICIENT SHUTOFF VALVES FOR ISOLATION OF SEPARATE PLUMBING FIXTURE GROUPS, AND AT PLUMBING EQUIPMENT FOR SERVICING.
2. PROVIDE INSULATION FOR ALL CW AND HW PIPING PER SPECIFICATIONS.
3. LOCATE CLEANOUTS IN ACCESSIBLE LOCATIONS. PLACE CLEANOUT IN VERTICAL RISER UNLESS HORIZONTAL CLEANOUT OR ACCESS EXISTS WITHIN 25 FEET.

SYM	DESCRIPTION	DATE	APPR

NAVFAC

COMMONWEALTH OF VIRGINIA
ANDREW EDWARD BOEHM
Lic. No. 043884
3/18/16
PROFESSIONAL ENGINEER
SEAL

Wiley|Wilson | BURNS McDONNELL
JOINT VENTURE

A/E INFO

APPROVED
FOR COMMANDER NAVFAC / B.L.T.L.

ACTIVITY

SATISFACTORY TO DATE

DES	AEB	DRW	SWL	CHK	JPC

PROJECT MANAGER
IPT TECH. BRANCH HEAD
CHIEF ENG/ARCH

DEPARTMENT OF THE NAVY
NAVAL FACILITIES ENGINEERING COMMAND
WEBSTER FIELD, NAS PATUXENT RIVER
NAVAL FACILITIES ENGINEERING COMMAND - WASHINGTON
ST. INIGOES, MD
NAVAL AIR STATION PATUXENT RIVER
ST. INIGOES, MD
BUILDING 8008 REPAIRS, ALTERATIONS AND ADDITION
LEGEND, ABBREVIATIONS, AND SCHEDULES

SCALE: AS NOTED
EPROJECT NO. 1183080
CONSTR. CONTR. NO. N40080-15-D-0452
NAVFAC DRAWING NO. 13078404
SHEET 120 OF 180
P-001

DRAWFORM REVISION: 10 MAY 2014

FILE NAME: C:\Users\Public\Documents\Revit 2015\215135R15_P_Cent_Andrew Boehm 6697.rvt
REV/DATE: 3/18/2016 1:44:06 AM

NOTES:
1. REMOVE ALL EXISTING PLUMBING FIXTURES AND ASSOCIATED WATER SUPPLY PIPING AND VALVES.
2. REMOVE EXISTING SANITARY PIPING BACK TO THE POINT OF NEW CONNECTION AND CAP WHERE NEEDED.

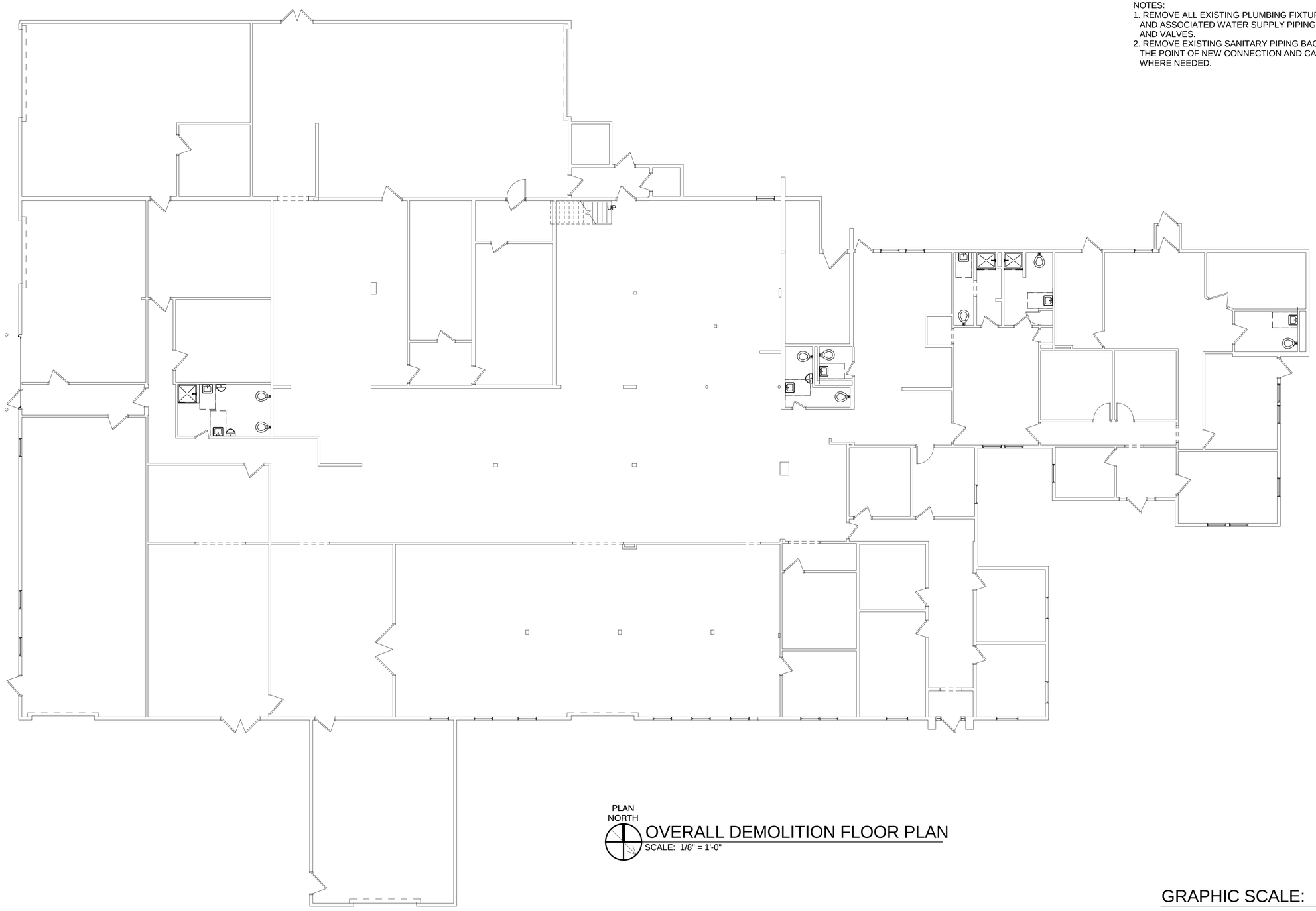

PLAN NORTH

OVERALL DEMOLITION FLOOR PLAN

SCALE: 1/8" = 1'-0"

GRAPHIC SCALE:

1/8" =1'-0" 0' 4' 8' 16'

SYM	DESCRIPTION	DATE	APPR

NAVFAC

COMMONWEALTH OF VIRGINIA
ANDREW EDWARD BOEHM
Lic. No. 043884
3/18/16
PROFESSIONAL ENGINEER
SEAL

Wiley|Wilson | BURNS McDONNELL
JOINT VENTURE

A/E INFO

APPROVED
FOR COMMANDER NAVFAC / B.L.T.L.

ACTIVITY

SATISFACTORY TO DATE
DES AEB | DRW SWL | CHK JPC
PROJECT MANAGER
IPT TECH. BRANCH HEAD
CHIEF ENG/ARCH

DEPARTMENT OF THE NAVY
NAVAL FACILITIES ENGINEERING COMMAND
WEBSTER FIELD, NAS PATUXENT RIVER

NAVAL FACILITIES ENGINEERING COMMAND ~ WASHINGTON
ST. INIGOES, MD
NAVAL AIR STATION PATUXENT RIVER
ST. INIGOES, MD

BUILDING 8008 REPAIRS, ALTERATIONS AND ADDITION

OVERALL DEMOLITION FLOOR PLAN

SCALE: AS NOTED
EPROJECT NO. 1183080
CONSTR. CONTR. NO. N40080-15-D-0452
NAVFAC DRAWING NO. 13078405
SHEET 121 OF 180

PD101

DRAWFORM REVISION: 10 MAY 2014

FILE NAME: C:\Users\Public\Documents\Revit 2015\215135R15_P_Cent_Andrew Boehm 6697.rvt
REVDATE: 3/18/2016 1:45:58 AM

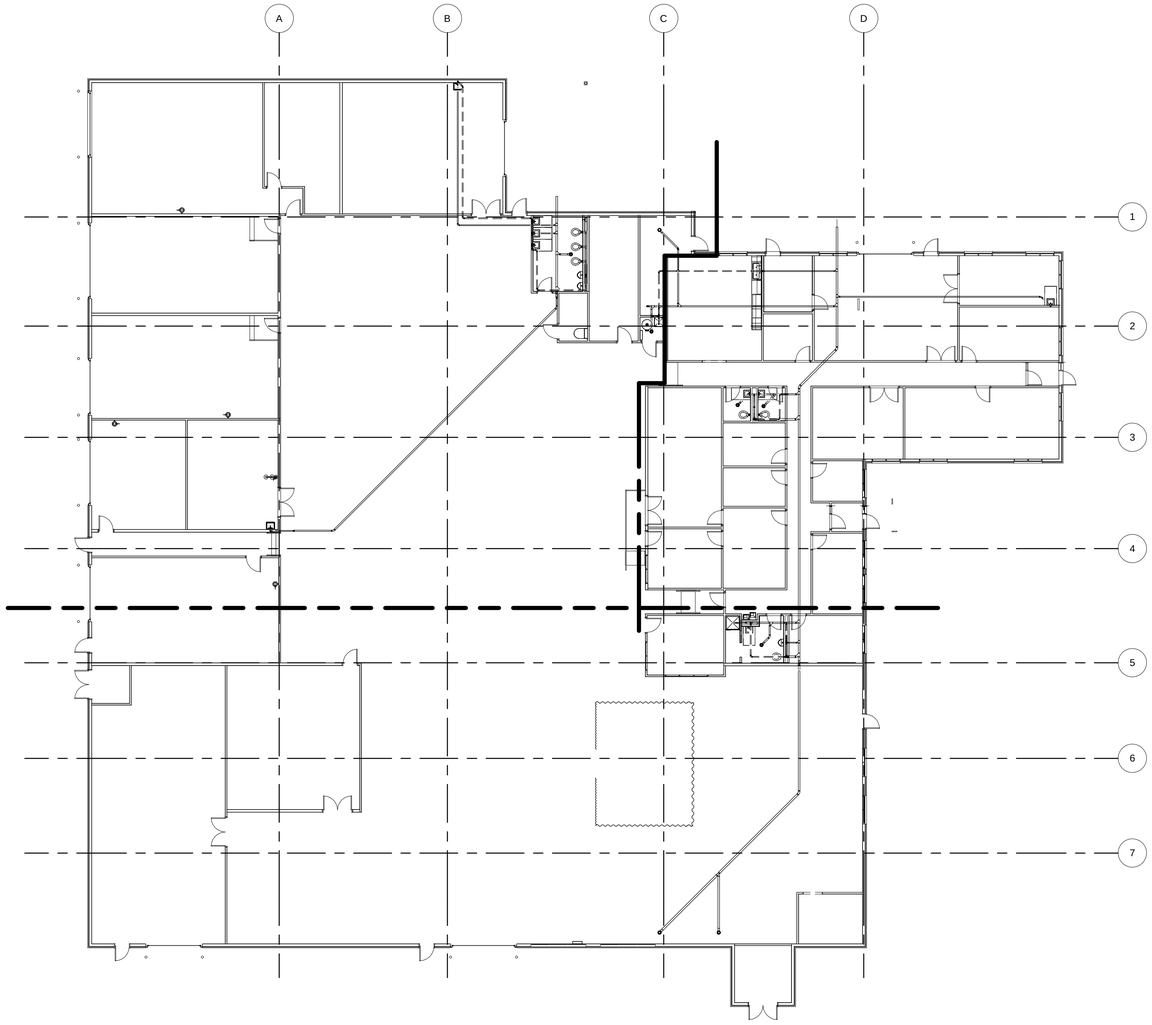

PLAN NORTH

OVERALL SANITARY FLOOR PLAN

SCALE: 1/16" = 1'-0"

KEY PLAN:

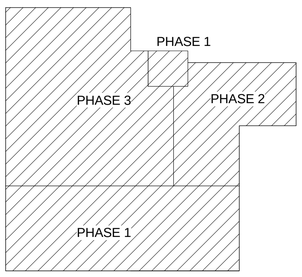

GRAPHIC SCALE:

1/16" =1'-0"

0' 8' 16' 32'

SYM	DESCRIPTION	DATE	APPR

NAVFAC

COMMONWEALTH OF VIRGINIA
ANDREW EDWARD BOEHM
Lic. No. 043884
3/18/16
PROFESSIONAL ENGINEER
SEAL

Wiley|Wilson | BURNS McDONNELL
JOINT VENTURE

A/E INFO

APPROVED

FOR COMMANDER NAVFAC / B.L.T.L.

ACTIVITY

SATISFACTORY TO DATE

DES AEB | DRW SWL | CHK JPC

PROJECT MANAGER

IPT TECH. BRANCH HEAD

CHIEF ENG/ARCH

DEPARTMENT OF THE NAVY
NAVAL FACILITIES ENGINEERING COMMAND
WEBSTER FIELD, NAS PATUXENT RIVER

NAVAL FACILITIES ENGINEERING COMMAND ~ WASHINGTON
ST. INIGOES, MD

NAVAL AIR STATION PATUXENT RIVER
ST. INIGOES, MD

BUILDING 8008 REPAIRS, ALTERATIONS AND ADDITION

OVERALL SANITARY FLOOR PLAN

SCALE: AS NOTED

EPROJECT NO. 1183080

CONSTR. CONTR. NO. N40080-15-D-0452

NAVFAC DRAWING NO. 13078406

SHEET 122 OF 180

P-100

DRAWFORM REVISION: 10 MAY 2014

FILE NAME: C:\Users\Public\Documents\Revit 2015\215135R15_P_Cent_Andrew Boehm 6697.rvt

REVDATE: 3/18/2016 1:44:15 AM

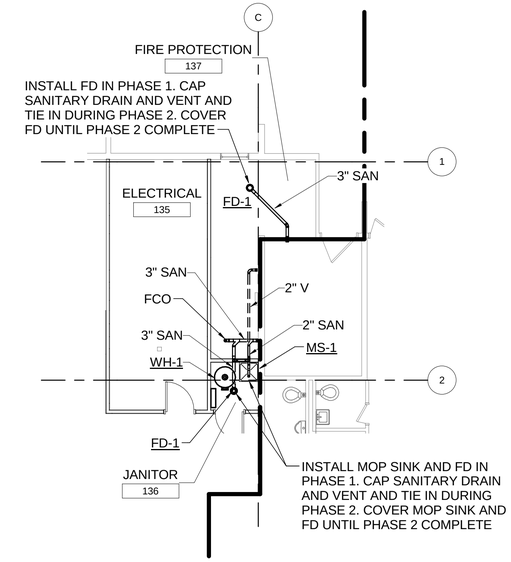

PLAN NORTH

PARTIAL SANITARY FLOOR PLAN - PHASE 1

SCALE: 1/8" = 1'-0"

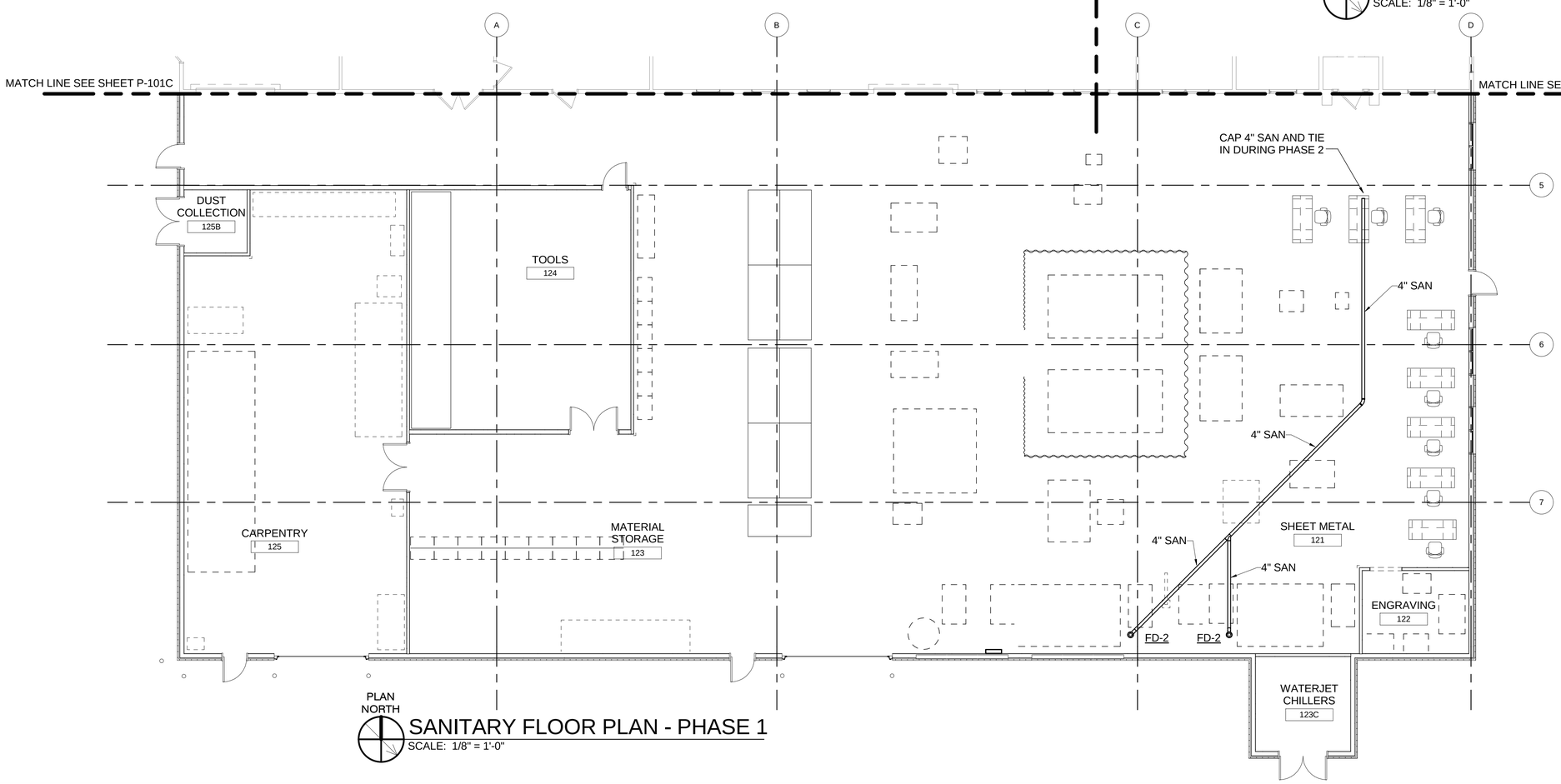

PLAN NORTH

SANITARY FLOOR PLAN - PHASE 1

SCALE: 1/8" = 1'-0"

KEY PLAN:

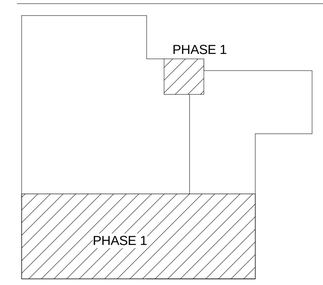

GRAPHIC SCALE:

1/8" =1'-0"

0' 4' 8' 16'

SYM	DESCRIPTION	DATE	APPR

NAVFAC

COMMONWEALTH OF VIRGINIA
ANDREW EDWARD BOEHM
Lic. No. 043884
3/18/16
PROFESSIONAL ENGINEER
SEAL

Wiley|Wilson | BURNS McDONNELL
JOINT VENTURE

A/E INFO

APPROVED

FOR COMMANDER NAVFAC / B.L.T.L.

ACTIVITY

SATISFACTORY TO DATE

DES AEB | DRW SWL | CHK JPC

PROJECT MANAGER

IPT TECH. BRANCH HEAD

CHIEF ENG/ARCH

DEPARTMENT OF THE NAVY
NAVAL FACILITIES ENGINEERING COMMAND
WEBSTER FIELD, NAS PATUXENT RIVER

NAVAL FACILITIES ENGINEERING COMMAND – WASHINGTON
ST. INIGOES, MD

NAVAL AIR STATION PATUXENT RIVER
ST. INIGOES, MD

BUILDING 8008 REPAIRS, ALTERATIONS AND ADDITION

SANITARY FLOOR PLAN - PHASE 1

SCALE: AS NOTED

EPROJECT NO. 1183080

CONSTR. CONTR. NO. N40080-15-D-0452

NAVFAC DRAWING NO. 13078407

SHEET 123 OF 180

P-101A

DRAWFORM REVISION: 10 MAY 2014

FILE NAME: C:\Users\Public\Documents\Revit 2015\215135R15_P_Cent_Andrew Boehm 6697.rvt

REVDATE: 3/18/2016 1:44:20 AM