NAVFAC
Naval Facilities Engineering Command
NAVFAC FAR EAST

eProject# 1358486

NAVFAC SPECIFICATION NO.

IDIQ EXTERIOR PAINTING CONTRACT

FOR VARIOUS AREAS

PREPARED BY:

NAVAL FACILITIES ENGINEERING COMMAND, FAR EAST

PUBLIC WORKS DEPARTMENT (PWD) YOKOSUKA

FACILITIES ENGINEERING AND ACQUISITION DIVISION (FEAD)

Architectural: Seiji Mitsuhashi Date: 31 MAR 2015
S. Mitsuhashi

Mechanical:_____ Date:_____

Electrical:_____ Date:_____

Submitted By: [signature] Date: 31 MAR 2015
K. Yamamoto (NAVFAC FE PRY211A)

REQUEST FOR PROPOSAL APPROVED BY:

Specification Approver: [signature] Date: 31 MAR 2015
K. Yamamoto (NAVFAC FE PRY211A)

Engineering Director: Randel Dockery Date: 31 MAR 2015
R. Dockery (NAVFAC FE PRY21)

TABLE OF CONTENTS

NOTICE TO BIDDERS

This contract is not a Construction Contract with Firm Fixed Price.
Refer to “Ordering” and “Minimum and Maximum Quantities in "CONTRACT CLAUSES".

1. CONTRACT LINE ITEMS AND CONTRACT SUBLINE ITEMS

a. Bidders/Offerors shall enter unit prices and amounts for contract line item numbers(CLINs), and exhibit line item numbers(ELINs) as indicated in the schedules.

b. In the event that there is a difference between a unit price and the extended total amount, the unit price will be held to be the intended bid/offer and the total of the CLINs, or ELINs will be recomputed accordingly. The CLIN which includes recomputed contract ELINs will also be recomputed to take into account the change in the contract Sub-line item number(SLIN) or ELIN. If the bidder/offeror provides a total amount for a CLIN, or ELIN but fails to enter the unit price, the total amount divided by the CLIN, or ELIN will be held to be the intended unit price.

2. SUPPLEMENTAL PRICING INFORMATION

a. Bidders/Offerors shall also enter the supplemental pricing information on the Exhibits. The offered price for CLINs in the schedule must be broken down by the ELINs listed on the Exhibits.

b. The supplemental pricing information that the Bidders/Offerors shall provide is composed of unit price, extended amounts and its total.

c. Include all necessary costs in the Unit Price to accomplish exhibit line item work. The costs shall be composed of direct and indirect labor, material, equipment, tools, overhead, transportation, profits, taxes, insurance, estimates and all other associated costs.

3. INDEFINITE QUANTITY INDIVIDUAL CONTRACT LINE ITEM QUANTITIES

Once the estimated quantities for individual line items shown in the schedule and any accompanying exhibits have been ordered, additional quantities may be ordered as long as the overall not-to-exceed (NTE) amount of the contract per year is not exceeded and the Contractor agrees by signing the task order.

ORDER LIMITATION(FAR 52.216-19)

a. Minimum order. When the Government requires supplies or services covered by this contract in an amount of less than ¥350,000, the Government is not obligated to purchase, nor is the Contractor obligated to furnish, those supplies or services under the contract.

b. Maximum order. The Contractor is not obligated to honor.

(1) Any order for single item in excess of ¥250,000,000.

(2) Any order for a combination of items in excess of ¥400,000,000.

(3) A series of orders from the same ordering office within seven working days that together call for quantities exceeding the limitation in subparagraphs (1) or (2) above.

c. Minimum and Maximum Quantities: As referred to in paragraph (b) of FAR 52.216-22, "INDEFINITE QUANTITY" clause, the contract minimum guarantee is a total of the Seed Project #1 & #2 (eProject#1350261 & eProject#1357747) cost.

SCHEDULE OF PRICE

NAME OF OFFEROR OR CONTRACTOR:

ITEM NO.	ITEM	Q'TY	UNIT	AMOUNT
CLIN 0001	**Base Period** 366 calendar days from the date of award or when the NOT-TO-EXCEED (NTE) amount is met whichever comes first. CLIN 0001 is the summation of the total prices for exhibit line item number ELINs A001through A056. SLIN 000101 Placeholder #1, Base Period	1	LS	¥
CLIN 0002	**First Option Period** 365 calendar days from the completion date of the Base Peirod or when the NOT-TO-EXCEED amount is met whichever comes first. CLIN 0002 is the summation of the total prices for exhibit line item number ELINs B001through B056. SLIN 000201 Placeholder #1, First Option Period	1	LS	¥
CLIN 0003	**Second Option Period** 365 calendar days from the completion date of the First Option Peirod or when the NOT-TO-EXCEED amount is met whichever comes first. CLIN 0003 is the summation of the total prices for exhibit line item number ELINs C001through C056. SLIN 000301 Placeholder #1, Second Option Period	1	LS	¥
CLIN 0004	**Third Option Period** 365 calendar days from the completion date of the First Option Peirod or when the NOT-TO-EXCEED amount is met whichever comes first. CLIN 0004 is the summation of the total prices for exhibit line item number ELINs D001through D056. SLIN 000401 Placeholder #1, Third Option Period	1	LS	¥
CLIN 0005	**Fourth Option Period** 366 calendar days from the completion date of the First Option Peirod or when the NOT-TO-EXCEED amount is met whichever comes first. CLIN 0004 is the summation of the total prices for exhibit line item number ELINs E001through E056. SLIN 000501 Placeholder #1, Fourth Option Period	1	LS	¥

ITEM NO.	ITEM	Q'TY	UNIT	AMOUNT
	GRAND TOTAL, NTE AMOUNT (CLIN 0001 THROUGH CLIN 0005)			¥

Abbrevialtions:

CLIN = Contract Line Itme Number
SLIN = Sub-line Item Number
NTE AMOUNT= Not-to-Exceed Amount
LS = LUMP SUM

SCHEDULE OF INDEFINITE QUANTITY WORK - "A"

EXHIBIT A Price for the Base Period

ITEM NO	DESCRIPTION	EST QTY	UT		UNIT PRICE		EST AMT TOTAL
A001	Prepare Lead-free surfaces with water cleaning.	148,500	SM	¥		¥	
A002	Prepare Lead-free surfaces with type 3.	32,670	SM	¥		¥	
A003	Repaint existing steel and galvanized steel siding/ roof/ wall surfaces.	10,700	SM	¥		¥	
A004	Repaint existing wooden siding and board surfaces.	2,000	SM	¥		¥	
A005	Repaint existing steel and galvanized steel framing/ box/ casing/ door/ window surfaces.	10,450	SM	¥		¥	
A006	Repaint existing steel and galvanized steel framing/ box/ casing/ door/ window surfaces with polyurethane type coating.	150	SM	¥		¥	
A007	Repaint existing wooden framing/ box/ casing/ base board/ door/ window surfaces.	3,900	SM	¥		¥	
A008	Repaint existing aluminum panel surfaces.	900	SM	¥		¥	
A009	Repaint existing steel and galvanized steel pipe surfaces, up to 50 mm outside diameter.	4,200	LM	¥		¥	
A010	Repaint existing steel and galvanized steel pipe surfaces, up to 50 mm outside diameter with polyurethane type coating.	100	LM	¥		¥	
A011	Repaint existing steel and galvanized steel pipe surfaces, up to 150 mm outside diameter.	1,000	LM	¥		¥	
A012	Repaint existing steel and galvanized steel pipe surfaces, up to 150 mm outside diameter with polyurethane type coating.	500	LM	¥		¥	
A013	Repaint existing steel and galvanized steel pipe surfaces, up to 300 mm outside diameter.	300	LM	¥		¥	
A014	Repaint existing steel and galvanized steel pipe surfaces, up to 300 mm outside diameter with polyurethane type coating.	2,200	LM	¥		¥	
A015	Repaint existing steel and galvanized steel pipe surfaces, over 300 mm outside diameter.	15	LM	¥		¥	
A016	Repaint existing steel and galvanized steel pipe surfaces, over 300 mm outside diameter with polyurethane type coating.	100	LM	¥		¥	

A017	Repaint existing PVC gutter/ downspout surfaces after surface preperation.	10,780	LM	¥	¥
A018	Repaint existing concrete, concrete block, and cement mortar surfaces.	55,000	SM	¥	¥
A019	Repaint existing multi-layer coating surfaces with rubber type top coating.	71,500	SM	¥	¥
A020	Repaint existing multi-layer coating surfaces with top coating.	102,300	SM	¥	¥
A021	Repaint existing building numbers and unit number text.	121	EA	¥	¥
A022	Repaint letters, unit: continuous letters(one word)/ EA.	200	EA	¥	¥
A023	Repaint existing ACB/Cement board surfaces.	935	SM	¥	¥
A024	Repaint existing non-slip coating.	200	SM	¥	¥
A025	Provide rubber type multi-layer coating system.	20,000	SM	¥	¥
A026	Provide waterproof urethane type floor coating on concrete and cement mortar surfaces.	2,000	SM	¥	¥
A027	Remove existing cement mortar, and provide waterproof cement mortar.	350	SM	¥	¥
A028	Repair spalling.	200	SM	¥	¥
A029	Repair crack with U-cut.	4,400	LM	¥	¥
A030	Replace existing non-ACB with new ones.	10	SM	¥	¥
A031	Replace existing metal flashing with new ones.	600	LM	¥	¥
A032	Replace existing galvanized steel sheet/ FRP with new ones .	200	SM	¥	¥
A033	Replace existing plastic vent cover with aluminum air vent.	60	EA	¥	¥
A034	Replace existing sealants for windows/ doors with new ones.	55,000	LM	¥	¥
A035	Replace existing joint sealants with new ones.	42,000	LM	¥	¥
A036	Replace existing wooden framing/ casing/ trim/ baseboard with new ones.	15	CM	¥	¥
A037	Replace PVC gutter/ downspout with new ones.	100	LM	¥	¥
A038	Replace existing glass pane in door or window with new ones.	5	SM	¥	¥

A039	Replace existing acrylic lighting fixture covers with new ones.	20	EA	¥	¥
A040	Patch repair hole of steel and galvanized steel with galvanized steel sheet, Unit: up to 0.05 SM hole/EA.	10	EA	¥	¥
A041	Replace existing ACB with new non-ACB ones.	80	SM	¥	¥
A042	Patch repair hole of ACB with galvanized steel sheet/FRP, Unit: Up to 0.50 SM hole/EA.	10	EA	¥	¥
A043	Lead-containing surface preparation with type 3.	10,000	SM	¥	¥
A044	Lead-containing surface preparation with solvent cleaning.	700	SM	¥	¥
A045	Asbestos-containing surface preparation with solvent cleaning.	3,200	SM	¥	¥
A046	Temporary enclosure for lead/ asbestos control area.	11,000	SM	¥	¥
A047	Air, wipe and/or soil sampling and monitoring for lead control area.	450	EA	¥	¥
A048	PCM air sampling and monitoring for asbestos control.	100	EA	¥	¥
A049	TEM air sampling and monitoring for asbestos control.	100	EA	¥	¥
A050	Change room for lead/ asbestos control area.	270	EA	¥	¥
A051	Provide gondola lift.	12	EA	¥	¥
A052	Provide scaffolding.	77,000	SM	¥	¥
A053	Remove and reinstall pigeon net, Unit: Up to 16 SM of opening size/EA.	10	EA	¥	¥
A054	Remove and reinstall window guard, Unit: Up to 2 SM of guard size/EA.	70	EA	¥	¥
A055	Remove and reinstall sign board, Unit: Up to 2 SM of board size/EA.	200	EA	¥	¥
A056	Other related miscellaneous work.		LS		¥ 10,000,000 (Not-to-exceed)

TOTAL (A001 through A056) Not-To-Exceed ¥ _____

Abbreviations:
EST AMT = Estimated Amount, EST QTY = Estimated Quantity, SM = Square Meter, LM = Linear Meter, CM = Cubic Meter, EA = Each, HR = Hour, LS = Lump Sum, ACB = Asbestos Cement Board, PCM = Phase Contrast Microscopy, TEM = Transmission Electron Microscopy

SCHEDULE OF INDEFINITE QUANTITY WORK - "B"

EXHIBIT B Price for the First Option Period

ITEM NO	DESCRIPTION	EST QTY	UT	UNIT PRICE	EST AMT TOTAL
B001	Prepare Lead-free surfaces with water cleaning.	135,000	SM	¥	¥
B002	Prepare Lead-free surfaces with type 3.	29,700	SM	¥	¥
B003	Repaint existing steel and galvanized steel siding/ roof/ wall surfaces.	10,700	SM	¥	¥
B004	Repaint existing wooden siding and board surfaces.	2,000	SM	¥	¥
B005	Repaint existing steel and galvanized steel framing/ box/ casing/ door/ window surfaces.	9,500	SM	¥	¥
B006	Repaint existing steel and galvanized steel framing/ box/ casing/ door/ window surfaces with polyurethane type coating.	150	SM	¥	¥
B007	Repaint existing wooden framing/ box/ casing/ base board/ door/ window surfaces.	3,900	SM	¥	¥
B008	Repaint existing aluminum panel surfaces.	900	SM	¥	¥
B009	Repaint existing steel and galvanized steel pipe surfaces, up to 50 mm outside diameter.	4,200	LM	¥	¥
B010	Repaint existing steel and galvanized steel pipe surfaces, up to 50 mm outside diameter with polyurethane type coating.	100	LM	¥	¥
B011	Repaint existing steel and galvanized steel pipe surfaces, up to 150 mm outside diameter.	1,000	LM	¥	¥
B012	Repaint existing steel and galvanized steel pipe surfaces, up to 150 mm outside diameter with polyurethane type coating.	500	LM	¥	¥
B013	Repaint existing steel and galvanized steel pipe surfaces, up to 300 mm outside diameter.	300	LM	¥	¥
B014	Repaint existing steel and galvanized steel pipe surfaces, up to 300 mm outside diameter with polyurethane type coating.	2,200	LM	¥	¥
B015	Repaint existing steel and galvanized steel pipe surfaces, over 300 mm outside diameter.	15	LM	¥	¥
B016	Repaint existing steel and galvanized steel pipe surfaces, over 300 mm outside diameter with polyurethane type coating.	100	LM	¥	¥

B017	Repaint existing PVC gutter/ downspout surfaces after surface preperation.	9,800	LM	¥	¥
B018	Repaint existing concrete, concrete block, and cement mortar surfaces.	50,000	SM	¥	¥
B019	Repaint existing multi-layer coating surfaces with rubber type top coating.	65,000	SM	¥	¥
B020	Repaint existing multi-layer coating surfaces with top coating.	93,000	SM	¥	¥
B021	Repaint existing building numbers and unit number text.	110	EA	¥	¥
B022	Repaint letters, unit: continuous letters(one word)/ EA.	200	EA	¥	¥
B023	Repaint existing ACB/Cement board surfaces.	850	SM	¥	¥
B024	Repaint existing non-slip coating.	200	SM	¥	¥
B025	Provide rubber type multi-layer coating system.	20,000	SM	¥	¥
B026	Provide waterproof urethane type floor coating on concrete and cement mortar surfaces.	2,000	SM	¥	¥
B027	Remove existing cement mortar, and provide waterproof cement mortar.	350	SM	¥	¥
B028	Repair spalling.	200	SM	¥	¥
B029	Repair crack with U-cut.	4,000	LM	¥	¥
B030	Replace existing non-ACB with new ones.	10	SM	¥	¥
B031	Replace existing metal flashing with new ones.	600	LM	¥	¥
B032	Replace existing galvanized steel sheet/ FRP with new ones .	200	SM	¥	¥
B033	Replace existing plastic vent cover with aluminum air vent.	60	EA	¥	¥
B034	Replace existing sealants for windows/ doors with new ones.	55,000	LM	¥	¥
B035	Replace existing joint sealants with new ones.	42,000	LM	¥	¥
B036	Replace existing wooden framing/ casing/ trim/ baseboard with new ones.	15	CM	¥	¥
B037	Replace PVC gutter/ downspout with new ones.	200	LM	¥	¥
B038	Replace existing glass pane in door or window with new ones.	5	SM	¥	¥

B039	Replace existing acrylic lighting fixture covers with new ones.	20	EA	¥	¥
B040	Patch repair hole of steel and galvanized steel with galvanized steel sheet, Unit: up to 0.05 SM hole/EA.	10	EA	¥	¥
B041	Replace existing ACB with new non-ACB ones.	80	SM	¥	¥
B042	Patch repair hole of ACB with galvanized steel sheet/FRP, Unit: Up to 0.50 SM hole/EA.	10	EA	¥	¥
B043	Lead-containing surface preparation with type 3.	10,000	SM	¥	¥
B044	Lead-containing surface preparation with solvent cleaning.	700	SM	¥	¥
B045	Asbestos-containing surface preparation with solvent cleaning.	3,200	SM	¥	¥
B046	Temporary enclosure for lead/ asbestos control area.	11,000	SM	¥	¥
B047	Air, wipe and/or soil sampling and monitoring for lead control area.	450	EA	¥	¥
B048	PCM air sampling and monitoring for asbestos control.	100	EA	¥	¥
B049	TEM air sampling and monitoring for asbestos control.	100	EA	¥	¥
B050	Change room for lead/ asbestos control area.	270	EA	¥	¥
B051	Provide gondola lift.	12	EA	¥	¥
B052	Provide scaffolding.	70,000	SM	¥	¥
B053	Remove and reinstall pigeon net, Unit: Up to 16 SM of opening size/EA.	10	EA	¥	¥
B054	Remove and reinstall window guard, Unit: Up to 2 SM of guard size/EA.	70	EA	¥	¥
B055	Remove and reinstall sign board, Unit: Up to 2 SM of board size/EA.	200	EA	¥	¥
B056	Other related miscellaneous work.		LS		¥ 10,000,000 (Not-to-exceed)

TOTAL (B001 through B056) Not-To-Exceed ¥ _____

Abbreviations:
EST AMT = Estimated Amount, EST QTY = Estimated Quantity, SM = Square Meter, LM = Linear Meter, CM = Cubic Meter, EA = Each, HR = Hour, LS = Lump Sum, ACB = Asbestos Cement Board, PCM = Phase Contrast Microscopy, TEM = Transmission Electron Microscopy

SCHEDULE OF INDEFINITE QUANTITY WORK - "C"

EXHIBIT C Price for the Second Option Period

ITEM NO	DESCRIPTION	EST QTY	UT		UNIT PRICE		EST AMT TOTAL
C001	Prepare Lead-free surfaces with water cleaning.	135,000	SM	¥		¥	
C002	Prepare Lead-free surfaces with type 3.	29,700	SM	¥		¥	
C003	Repaint existing steel and galvanized steel siding/ roof/ wall surfaces.	10,700	SM	¥		¥	
C004	Repaint existing wooden siding and board surfaces.	2,000	SM	¥		¥	
C005	Repaint existing steel and galvanized steel framing/ box/ casing/ door/ window surfaces.	9,500	SM	¥		¥	
C006	Repaint existing steel and galvanized steel framing/ box/ casing/ door/ window surfaces with polyurethane type coating.	150	SM	¥		¥	
C007	Repaint existing wooden framing/ box/ casing/ base board/ door/ window surfaces.	3,900	SM	¥		¥	
C008	Repaint existing aluminum panel surfaces.	900	SM	¥		¥	
C009	Repaint existing steel and galvanized steel pipe surfaces, up to 50 mm outside diameter.	4,200	LM	¥		¥	
C010	Repaint existing steel and galvanized steel pipe surfaces, up to 50 mm outside diameter with polyurethane type coating.	100	LM	¥		¥	
C011	Repaint existing steel and galvanized steel pipe surfaces, up to 150 mm outside diameter.	1,000	LM	¥		¥	
C012	Repaint existing steel and galvanized steel pipe surfaces, up to 150 mm outside diameter with polyurethane type coating.	500	LM	¥		¥	
C013	Repaint existing steel and galvanized steel pipe surfaces, up to 300 mm outside diameter.	300	LM	¥		¥	
C014	Repaint existing steel and galvanized steel pipe surfaces, up to 300 mm outside diameter with polyurethane type coating.	2,200	LM	¥		¥	
C015	Repaint existing steel and galvanized steel pipe surfaces, over 300 mm outside diameter.	15	LM	¥		¥	
C016	Repaint existing steel and galvanized steel pipe surfaces, over 300 mm outside diameter with polyurethane type coating.	100	LM	¥		¥	

C017	Repaint existing PVC gutter/ downspout surfaces after surface preperation.	9,800	LM	¥	¥
C018	Repaint existing concrete, concrete block, and cement mortar surfaces.	50,000	SM	¥	¥
C019	Repaint existing multi-layer coating surfaces with rubber type top coating.	65,000	SM	¥	¥
C020	Repaint existing multi-layer coating surfaces with top coating.	93,000	SM	¥	¥
C021	Repaint existing building numbers and unit number text.	110	EA	¥	¥
C022	Repaint letters, unit: continuous letters(one word)/ EA.	200	EA	¥	¥
C023	Repaint existing ACB/Cement board surfaces.	850	SM	¥	¥
C024	Repaint existing non-slip coating.	200	SM	¥	¥
C025	Provide rubber type multi-layer coating system.	20,000	SM	¥	¥
C026	Provide waterproof urethane type floor coating on concrete and cement mortar surfaces.	2,000	SM	¥	¥
C027	Remove existing cement mortar, and provide waterproof cement mortar.	350	SM	¥	¥
C028	Repair spalling.	200	SM	¥	¥
C029	Repair crack with U-cut.	4,000	LM	¥	¥
C030	Replace existing non-ACB with new ones.	10	SM	¥	¥
C031	Replace existing metal flashing with new ones.	600	LM	¥	¥
C032	Replace existing galvanized steel sheet/ FRP with new ones .	200	SM	¥	¥
C033	Replace existing plastic vent cover with aluminum air vent.	60	EA	¥	¥
C034	Replace existing sealants for windows/ doors with new ones.	55,000	LM	¥	¥
C035	Replace existing joint sealants with new ones.	42,000	LM	¥	¥
C036	Replace existing wooden framing/ casing/ trim/ baseboard with new ones.	15	CM	¥	¥
C037	Replace PVC gutter/ downspout with new ones.	200	LM	¥	¥
C038	Replace existing glass pane in door or window with new ones.	5	SM	¥	¥

C039	Replace existing acrylic lighting fixture covers with new ones.	20	EA	¥	¥
C040	Patch repair hole of steel and galvanized steel with galvanized steel sheet, Unit: up to 0.05 SM hole/EA.	10	EA	¥	¥
C041	Replace existing ACB with new non-ACB ones.	80	SM	¥	¥
C042	Patch repair hole of ACB with galvanized steel sheet/FRP, Unit: Up to 0.50 SM hole/EA.	10	EA	¥	¥
C043	Lead-containing surface preparation with type 3.	10,000	SM	¥	¥
C044	Lead-containing surface preparation with solvent cleaning.	700	SM	¥	¥
C045	Asbestos-containing surface preparation with solvent cleaning.	3,200	SM	¥	¥
C046	Temporary enclosure for lead/ asbestos control area.	11,000	SM	¥	¥
C047	Air, wipe and/or soil sampling and monitoring for lead control area.	450	EA	¥	¥
C048	PCM air sampling and monitoring for asbestos control.	100	EA	¥	¥
C049	TEM air sampling and monitoring for asbestos control.	100	EA	¥	¥
C050	Change room for lead/ asbestos control area.	270	EA	¥	¥
C051	Provide gondola lift.	12	EA	¥	¥
C052	Provide scaffolding.	70,000	SM	¥	¥
C053	Remove and reinstall pigeon net, Unit: Up to 16 SM of opening size/EA.	10	EA	¥	¥
C054	Remove and reinstall window guard, Unit: Up to 2 SM of guard size/EA.	70	EA	¥	¥
C055	Remove and reinstall sign board, Unit: Up to 2 SM of board size/EA.	200	EA	¥	¥
C056	Other related miscellaneous work.		LS		¥ 10,000,000 (Not-to-exceed)

TOTAL (C001 through C056) Not-To-Exceed

¥ _____

Abbreviations:
EST AMT = Estimated Amount, EST QTY = Estimated Quantity, SM = Square Meter, LM = Linear Meter, CM = Cubic Meter, EA = Each, HR = Hour, LS = Lump Sum, ACB = Asbestos Cement Board, PCM = Phase Contrast Microscopy, TEM = Transmission Electron Microscopy

SCHEDULE OF INDEFINITE QUANTITY WORK - "D"

EXHIBIT D Price for the Third Option Period

ITEM NO	DESCRIPTION	EST QTY	UT	UNIT PRICE	EST AMT TOTAL
D001	Prepare Lead-free surfaces with water cleaning.	135,000	SM	¥	¥
D002	Prepare Lead-free surfaces with type 3.	29,700	SM	¥	¥
D003	Repaint existing steel and galvanized steel siding/ roof/ wall surfaces.	10,700	SM	¥	¥
D004	Repaint existing wooden siding and board surfaces.	2,000	SM	¥	¥
D005	Repaint existing steel and galvanized steel framing/ box/ casing/ door/ window surfaces.	9,500	SM	¥	¥
D006	Repaint existing steel and galvanized steel framing/ box/ casing/ door/ window surfaces with polyurethane type coating.	150	SM	¥	¥
D007	Repaint existing wooden framing/ box/ casing/ base board/ door/ window surfaces.	3,900	SM	¥	¥
D008	Repaint existing aluminum panel surfaces.	900	SM	¥	¥
D009	Repaint existing steel and galvanized steel pipe surfaces, up to 50 mm outside diameter.	4,200	LM	¥	¥
D010	Repaint existing steel and galvanized steel pipe surfaces, up to 50 mm outside diameter with polyurethane type coating.	100	LM	¥	¥
D011	Repaint existing steel and galvanized steel pipe surfaces, up to 150 mm outside diameter.	1,000	LM	¥	¥
D012	Repaint existing steel and galvanized steel pipe surfaces, up to 150 mm outside diameter with polyurethane type coating.	500	LM	¥	¥
D013	Repaint existing steel and galvanized steel pipe surfaces, up to 300 mm outside diameter.	300	LM	¥	¥
D014	Repaint existing steel and galvanized steel pipe surfaces, up to 300 mm outside diameter with polyurethane type coating.	2,200	LM	¥	¥
D015	Repaint existing steel and galvanized steel pipe surfaces, over 300 mm outside diameter.	15	LM	¥	¥
D016	Repaint existing steel and galvanized steel pipe surfaces, over 300 mm outside diameter with polyurethane type coating.	100	LM	¥	¥

D017	Repaint existing PVC gutter/ downspout surfaces after surface preperation.	9,800	LM	¥	¥
D018	Repaint existing concrete, concrete block, and cement mortar surfaces.	50,000	SM	¥	¥
D019	Repaint existing multi-layer coating surfaces with rubber type top coating.	65,000	SM	¥	¥
D020	Repaint existing multi-layer coating surfaces with top coating.	93,000	SM	¥	¥
D021	Repaint existing building numbers and unit number text.	110	EA	¥	¥
D022	Repaint letters, unit: continuous letters(one word)/ EA.	200	EA	¥	¥
D023	Repaint existing ACB/Cement board surfaces.	850	SM	¥	¥
D024	Repaint existing non-slip coating.	200	SM	¥	¥
D025	Provide rubber type multi-layer coating system.	20,000	SM	¥	¥
D026	Provide waterproof urethane type floor coating on concrete and cement mortar surfaces.	2,000	SM	¥	¥
D027	Remove existing cement mortar, and provide waterproof cement mortar.	350	SM	¥	¥
D028	Repair spalling.	200	SM	¥	¥
D029	Repair crack with U-cut.	4,000	LM	¥	¥
D030	Replace existing non-ACB with new ones.	10	SM	¥	¥
D031	Replace existing metal flashing with new ones.	600	LM	¥	¥
D032	Replace existing galvanized steel sheet/ FRP with new ones .	200	SM	¥	¥
D033	Replace existing plastic vent cover with aluminum air vent.	60	EA	¥	¥
D034	Replace existing sealants for windows/ doors with new ones.	55,000	LM	¥	¥
D035	Replace existing joint sealants with new ones.	42,000	LM	¥	¥
D036	Replace existing wooden framing/ casing/ trim/ baseboard with new ones.	15	CM	¥	¥
D037	Replace PVC gutter/ downspout with new ones.	200	LM	¥	¥
D038	Replace existing glass pane in door or window with new ones.	5	SM	¥	¥

D039	Replace existing acrylic lighting fixture covers with new ones.	20	EA	¥	¥
D040	Patch repair hole of steel and galvanized steel with galvanized steel sheet, Unit: up to 0.05 SM hole/EA.	10	EA	¥	¥
D041	Replace existing ACB with new non-ACB ones.	80	SM	¥	¥
D042	Patch repair hole of ACB with galvanized steel sheet/FRP, Unit: Up to 0.50 SM hole/EA.	10	EA	¥	¥
D043	Lead-containing surface preparation with type 3.	10,000	SM	¥	¥
D044	Lead-containing surface preparation with solvent cleaning.	700	SM	¥	¥
D045	Asbestos-containing surface preparation with solvent cleaning.	3,200	SM	¥	¥
D046	Temporary enclosure for lead/ asbestos control area.	11,000	SM	¥	¥
D047	Air, wipe and/or soil sampling and monitoring for lead control area.	450	EA	¥	¥
D048	PCM air sampling and monitoring for asbestos control.	100	EA	¥	¥
D049	TEM air sampling and monitoring for asbestos control.	100	EA	¥	¥
D050	Change room for lead/ asbestos control area.	270	EA	¥	¥
D051	Provide gondola lift.	12	EA	¥	¥
D052	Provide scaffolding.	70,000	SM	¥	¥
D053	Remove and reinstall pigeon net, Unit: Up to 16 SM of opening size/EA.	10	EA	¥	¥
D054	Remove and reinstall window guard, Unit: Up to 2 SM of guard size/EA.	70	EA	¥	¥
D055	Remove and reinstall sign board, Unit: Up to 2 SM of board size/EA.	200	EA	¥	¥
D056	Other related miscellaneous work.		LS		¥ 10,000,000 (Not-to-exceed)

TOTAL (D001 through D056) Not-To-Exceed ¥ _____

Abbreviations:
EST AMT = Estimated Amount, EST QTY = Estimated Quantity, SM = Square Meter, LM = Linear Meter, CM = Cubic Meter, EA = Each, HR = Hour, LS = Lump Sum, ACB = Asbestos Cement Board, PCM = Phase Contrast Microscopy, TEM = Transmission Electron Microscopy

SCHEDULE OF INDEFINITE QUANTITY WORK - "E"

EXHIBIT E Price for the Fourth Option Period

ITEM NO	DESCRIPTION	EST QTY	UT	UNIT PRICE	EST AMT TOTAL
E001	Prepare Lead-free surfaces with water cleaning.	135,000	SM	¥	¥
E002	Prepare Lead-free surfaces with type 3.	29,700	SM	¥	¥
E003	Repaint existing steel and galvanized steel siding/ roof/ wall surfaces.	10,700	SM	¥	¥
E004	Repaint existing wooden siding and board surfaces.	2,000	SM	¥	¥
E005	Repaint existing steel and galvanized steel framing/ box/ casing/ door/ window surfaces.	9,500	SM	¥	¥
E006	Repaint existing steel and galvanized steel framing/ box/ casing/ door/ window surfaces with polyurethane type coating.	150	SM	¥	¥
E007	Repaint existing wooden framing/ box/ casing/ base board/ door/ window surfaces.	3,900	SM	¥	¥
E008	Repaint existing aluminum panel surfaces.	900	SM	¥	¥
E009	Repaint existing steel and galvanized steel pipe surfaces, up to 50 mm outside diameter.	4,200	LM	¥	¥
E010	Repaint existing steel and galvanized steel pipe surfaces, up to 50 mm outside diameter with polyurethane type coating.	100	LM	¥	¥
E011	Repaint existing steel and galvanized steel pipe surfaces, up to 150 mm outside diameter.	1,000	LM	¥	¥
E012	Repaint existing steel and galvanized steel pipe surfaces, up to 150 mm outside diameter with polyurethane type coating.	500	LM	¥	¥
E013	Repaint existing steel and galvanized steel pipe surfaces, up to 300 mm outside diameter.	300	LM	¥	¥
E014	Repaint existing steel and galvanized steel pipe surfaces, up to 300 mm outside diameter with polyurethane type coating.	2,200	LM	¥	¥
E015	Repaint existing steel and galvanized steel pipe surfaces, over 300 mm outside diameter.	15	LM	¥	¥
E016	Repaint existing steel and galvanized steel pipe surfaces, over 300 mm outside diameter with polyurethane type coating.	100	LM	¥	¥

E017	Repaint existing PVC gutter/ downspout surfaces after surface preperation.	9,800	LM	¥	¥
E018	Repaint existing concrete, concrete block, and cement mortar surfaces.	50,000	SM	¥	¥
E019	Repaint existing multi-layer coating surfaces with rubber type top coating.	65,000	SM	¥	¥
E020	Repaint existing multi-layer coating surfaces with top coating.	93,000	SM	¥	¥
E021	Repaint existing building numbers and unit number text.	110	EA	¥	¥
E022	Repaint letters, unit: continuous letters(one word)/ EA.	200	EA	¥	¥
E023	Repaint existing ACB/Cement board surfaces.	850	SM	¥	¥
E024	Repaint existing non-slip coating.	200	SM	¥	¥
E025	Provide rubber type multi-layer coating system.	20,000	SM	¥	¥
E026	Provide waterproof urethane type floor coating on concrete and cement mortar surfaces.	2,000	SM	¥	¥
E027	Remove existing cement mortar, and provide waterproof cement mortar.	350	SM	¥	¥
E028	Repair spalling.	200	SM	¥	¥
E029	Repair crack with U-cut.	4,000	LM	¥	¥
E030	Replace existing non-ACB with new ones.	10	SM	¥	¥
E031	Replace existing metal flashing with new ones.	600	LM	¥	¥
E032	Replace existing galvanized steel sheet/ FRP with new ones .	200	SM	¥	¥
E033	Replace existing plastic vent cover with aluminum air vent.	60	EA	¥	¥
E034	Replace existing sealants for windows/ doors with new ones.	55,000	LM	¥	¥
E035	Replace existing joint sealants with new ones.	42,000	LM	¥	¥
E036	Replace existing wooden framing/ casing/ trim/ baseboard with new ones.	15	CM	¥	¥
E037	Replace PVC gutter/ downspout with new ones.	200	LM	¥	¥
E038	Replace existing glass pane in door or window with new ones.	5	SM	¥	¥

E039	Replace existing acrylic lighting fixture covers with new ones.	20	EA	¥	¥	
E040	Patch repair hole of steel and galvanized steel with galvanized steel sheet, Unit: up to 0.05 SM hole/EA.	10	EA	¥	¥	
E041	Replace existing ACB with new non-ACB ones.	80	SM	¥	¥	
E042	Patch repair hole of ACB with galvanized steel sheet/FRP, Unit: Up to 0.50 SM hole/EA.	10	EA	¥	¥	
E043	Lead-containing surface preparation with type 3.	10,000	SM	¥	¥	
E044	Lead-containing surface preparation with solvent cleaning.	700	SM	¥	¥	
E045	Asbestos-containing surface preparation with solvent cleaning.	3,200	SM	¥	¥	
E046	Temporary enclosure for lead/ asbestos control area.	11,000	SM	¥	¥	
E047	Air, wipe and/or soil sampling and monitoring for lead control area.	450	EA	¥	¥	
E048	PCM air sampling and monitoring for asbestos control.	100	EA	¥	¥	
E049	TEM air sampling and monitoring for asbestos control.	100	EA	¥	¥	
E050	Change room for lead/ asbestos control area.	270	EA	¥	¥	
E051	Provide gondola lift.	12	EA	¥	¥	
E052	Provide scaffolding.	70,000	SM	¥	¥	
E053	Remove and reinstall pigeon net, Unit: Up to 16 SM of opening size/EA.	10	EA	¥	¥	
E054	Remove and reinstall window guard, Unit: Up to 2 SM of guard size/EA.	70	EA	¥	¥	
E055	Remove and reinstall sign board, Unit: Up to 2 SM of board size/EA.	200	EA	¥	¥	
E056	Other related miscellaneous work.		LS		¥	10,000,000 (Not-to-exceed)

TOTAL (E001 through E056) Not-To-Exceed ¥ _____

Abbreviations:
EST AMT = Estimated Amount, EST QTY = Estimated Quantity, SM = Square Meter, LM = Linear Meter, CM = Cubic Meter, EA = Each, HR = Hour, LS = Lump Sum, ACB = Asbestos Cement Board, PCM = Phase Contrast Microscopy, TEM = Transmission Electron Microscopy

SUPPLEMENTARY EXPLANATION OF WORK

The following description meets the description of the item number shown on each “EXHIBIT”, and states the supplementary explanation of the each item shown on “EXHIBIT”.

ITEM NO.	SUPPLEMENTARY EXPLANATION
001	Remove dirt, dust, loose paint and chalking by brushing with flesh water. Remove grease, oil, mold and other deleterious substances. For large areas, water blasting may be used. Surfaces shall be dry and clean prior to application of the coating. This line item includes installation and removal of temporary coverings for protection of areas not to be painted such as hardware, aluminum windows and equipment etc. Unit measurement shall be by the areas actually painted.
002	Prepare surfaces with “3-SHU KEREN” by both hand tool cleaning and power tool cleaning. Remove all loose rust, loose paint and other loose detrimental foreign matter. They, hand tool cleaning and power tool cleaning, are not intended that adherent rust and paint be removed by those processes. Rust and paint are considered adherent if they cannot be removed by lifting with a dull putty knife. Remove dirt splinters, loose particles, grease, oil, disintegrated coatings, and other substances deleterious to coating performance as specified for each substrate. This line item includes installation and removal of temporary coverings for protection of areas not to be painted such as hardware, aluminum windows and equipment etc. Unit measurement shall be by the areas actually painted.
003~0025	Apply sealer or primer, and paints on flat or textured surfaces. Each line item shall also include; (1) Remove unused nails, screws and tapes. (2) Retighten loose screws and nails. (3) Putty on hair cracks less than 0.3 mm width, scratches, dents pin holes and screw/ nail heads. (a) Line item 008 existing repainting aluminum panel and 017 repainting existing PVC gutter/ downspout surfaces include solvent cleaning. (b) Preparation for Line item 023 repainting existing asbestos cement board will apply item 045.

026 Prepare existing surfaces, apply sealant and waterproof urethane type floor coating on concrete and cement mortar surfaces at balcony.

027 Remove existing cement mortar, provide waterproof cement mortar and provide flat or multi-layer coating system if painting necessaries. Thickness shall be up to 50 mm.

028 Chip out existing damaged surfaces in concrete, prepare and prime steel reinforcing bars with epoxy resin anti-corrosive primer where it’s exposing by chipping out of concrete, fill with waterproof cement mortar and provide flat or multi-layer coating system to match original surfaces.

029 Prepare existing cracks exceeding 0.3 mm width in concrete to “U” section shape, “U-cut”, by saw-cutting and chipping out, approximately 10 mm width and depth, seal bottom portion of cracks with urethane sealant compound conforming to JIS A 5758, fill with polymer cement mortar filler and provide flat or multi-layer coating system to match original surfaces.

030 Replace existing non-asbestos cement board up to 6 mm thickness. Line item shall also include replacing joiners if necessary.

031 Replace existing metal flashing up to 450 mm, width 0.5 mm thickness Galvanized Steel Sheet (GSS) or pre-coated GSS, around doors, windows, wall corners, roof gables and roof ridges etc.

032 Replace existing GSS and/ or FRP with 0.5 mm thickness GSS, pre-coated GSS and/ or 1.2 thickness FRP. New GSS shall be fastened with hook bolts or screw nails with round felt washers. New hook bolts and screw nails shall be stainless steel or galvanized steel.

033 Replace existing plastic vent cover with new aluminum air vent on concrete wall including sealant.

034 Replace existing sealants around frame of window or door.

035 Replace existing sealants around joint of concrete or metal panel.

036 Replace existing wooden framing, casing, trim and baseboard etc. with new ones. New wood shall be same as or similar to existing wood grade.

037 Replace PVC half-round or squared gutter up to 200 mm width, and/ or PVC downspout up to 125 mm diameter. Line item shall also include replacement of stainless steel supports for gutter and/ or downspout.

038 Replace glass pane including sealant or plastic gasket. New glass pane shall be clear, frosted, tempered or wired pane up to 6.8 mm thickness.

039 Replace existing acrylic lighting fixture covers with new ones.

040 Patch holes in steel or metal of box, panel, door or hood etc., with maximum 1.6 mm thickness GSS fastened with blind rivets, tapping screws or weld.

041 (1) Remove and dispose of existing corrugated asbestos cement board (ACB) siding, roofing or gable/ corner flashing and provide new 0.5 mm thickness GSS or 1.2 thickness FRP. Hook bolt or screw fastener shall be stainless steel with round stainless steel washer and felt washer.

(2) Remove and dispose of existing flat ACB up to 12 mm thickness and provide new non-ACB ones including replacement of joiners, if necessary.

042 Patch hole of corrugated ACB roofing/ siding or ACB corner/ gable/ ridge board, with 0.5 mm thickness GSS or 1.2 thickness FRP, including sealant compound conforming to JIS A 5758, silicone, urethane etc., around patched hole.

043~044 Prepare existing lead-containing surfaces with type 3 (“3-SHU KEREN”) or solvent cleaning to be painted, including installation and removal of temporary coverings for protection of areas not to be painted such as hardware, aluminum windows and equipment etc. Unit measurement shall be by the areas actually painted. Lead based paint portions will be indicated in individual task order.

045 Prepare existing asbestos-containing surfaces with solvent cleaning to be painted and dispose of asbestos containing hazardous waste, including installation and removal of temporary coverings for protection of areas not to be

painted such as hardware, aluminum windows and equipment etc. Unit measurement shall be by the areas actually painted. Asbestos-containing portions will be indicated in individual task order.

046 Install and remove plastic/vinyl sheet covering enclosure for lead or asbestos control area. Unit measurement shall be by the areas of enclosure such as ceiling, wall and floor to be covered by plastic/vinyl sheet covering as enclosure.

047 Provide air, wipe and/or soil sampling test and analysis including before lead based paint (LBP) removal work sampling, during LBP removal work sampling(s) and after LBP removal work sampling(s) in accordance with SECTION 02 82 33.13 20 REMOVAL/CONTROL AND DISPOSAL OF PAINT WITH LEAD and 02 83 19.00 10 LEAD BASED PAINT HAZARD ABATEMENT, TARGET HOUSING & CHILD OCCUPIED. Unit measurement shall be by the number of sampling performance.

048 Provide Phase Contrast Microscopy (PCM) area air and personal sampling test and analysis including prior to asbestos removal work sampling, during asbestos work sampling(s) and after final clean-up sampling(s) in accordance with SECTION 02 82 16.00 20 ENGINEERING CONTROL OF ASBESTOS CONTAINING MATERIALS. Unit measurement shall be by the number of sampling performance.

049 Provide Transmission Electron Microscopy (TEM) area air and personal sampling test and analysis including prior to asbestos removal work sampling, during asbestos removal work sampling and after final clean-up sampling in accordance with SECTION 02 82 16.00 20 ENGINEERING CONTROL OF ASBESTOS CONTAINING MATERIALS. Unit measurement shall be by the number of sampling performance.

050 Provide and remove change room consist of two layer of six-mil polyethylene sheet covering with framing and triple flaps of six-mil polyethylene sheets at doorways. Change room size shall be at least 5′-0″ x 5′-0″ x 6′-6″ height.

051 Provide two(2) gondola lift at one(1) High-rise capable of transporting resources in vertical distance up to 31 meters of ground.

052 Assemble and disassemble of double-pole scaffolding (“Tankan Hon Ashiba”) and/or prefabricated scaffolding (“Wakugumi Ashiba”), including covering around scaffolding to prevent

primer/ sealer/ paint etc. from spreading. Unit measurement shall be by the area of scaffolding.

053 Remove and reinstall pigeon net. After reinstallation, perform operation test and make necessary adjustment for proper operation as same as prior removal condition. Unit measurement shall be by the opening area.

054~055 Remove and reinstall window guard or sign board.

056 This description covers all kind of items not shown on “EXIBIT” and “SUPPLEMENTARY EXPLANATION OF WORK”, and related with the description shown on “EXIBIT” and “SUPPLEMENTARY EXPLANATION OF WORK”.

*** END OF SECTION ***

DIVISION 01

SECTION 01 11 00.00 33

SUMMARY OF WORK

PART 1 GENERAL

1.1 REFERENCES

The publications listed below form a part of this specification to the extent referenced. The publications are referred to within the text by the basic designation only. The latest version of the publication at time of award shall be used.

HEADQUARTERS, US FORCES JAPAN, DEPARTMENT OF DEFENSE (DOD)

JEGS	(2008 September) Japan Environmental Governing Standards

DEPARTMENT OF DEFENSE (DOD)

DOD 4717.05 G	OEBGD Overseas Environmental Baseline Guidance Document

1.2 DEFINITIONS

Definitions pertaining to sustainable development are as defined in JEGS, Section 01 57 19.00 33 “TEMPORARY ENVIRONMENTAL CONTROLS”, and as specified.

a. "Environmentally preferable products" have a lesser or reduced effect on the environment in comparison to conventional products and services. This comparison may consider raw materials acquisition, production, manufacturing, packaging, distribution, reuse, operation, maintenance, or disposal of the product.

b. "Indoor environmental quality" is the physical characteristics of the building interior that impact occupants, including air quality, illumination, acoustics, occupant control, thermal comfort, daylighting, and views.

c. "Operational performance" is the functional behavior of the building as a whole or of the building components.

d. "Sustainability" is the balance of environmental, economic, and societal considerations.

1.3 SUBMITTALS

Government approval is required for submittals with a "G" designation; submittals not having a "G" designation are for Contractor Quality Control approval. When used, a designation following the "G" designation identifies the office that will review the submittal for the Government. The following shall be submitted in accordance with Section 01 33 00.00 33 SUBMITTAL PROCEDURES:

SD-01 Preconstruction Submittals

Submit the following items to the Contracting Officer:

Utility Outage Requests; G (FEAD)

Hot work Permits; G (FEAD)

1.4 WORK COVERED BY CONTRACT DOCUMENTS

1.4.1 Project Description

The work includes painting and repainting of exterior building, and related works, as described in “SCHEDULE OF INDEFINITE QUANTITY WORK”, “SUPPLEMENTARY EXPLANATION OF WORK.”, sketches, and specifications. Related works are defined as temporary works and relevant works which are required to accomplish this project. These works do not include unforeseen site conditions.

The estimated quantities listed in "SCHEDULE OF INDEFINITE QUANTITY WORK" are for bidding purposes only. The actual quantities ordered will be identified in each task order issued.
Statement that work required by each Task Order will be described in the Government Statement of Work for that Task Order.

1.4.1.1 Asbestos Abatement Work

If task order includes asbestos abatement work, the Contractor shall remove the asbestos in accordance with applicable codes, rules, and regulations, and Section 02 82 16.00 33 “Engineering Control of Asbestos Containing Materials”.

1.4.1.2 Lead Based Paint Abatement Work

If task order includes lead based paint abatement work, the Contractor shall remove the lead-based paint in accordance with applicable codes, rules, and regulations, and Section 02 83 13.00 33 “Lead in Construction” 02 83 19.00 33 “Lead Based Paint Hazard Abatement Target Housing & Child Occupied Facilities”.

1.4.1.3 Specifications and Standards

The specifications and standards referenced in this project specification, including addenda, amendments, and errata listed, will govern in all cases where references thereto are made. Apply the latest eddition to the refferenced standards and codes. In case of differences between these specifications or standards and this project specification or its accompanying drawings, this project specification and its accompanying drawings will govern to the extent of such differences. Otherwise, the referenced specifications and standards will apply. The requirement for packaging, packing, marking, and preparation for shipment or delivery included in the referenced specifications will apply only to materials and equipment that are furnished directly to the Government and not to materials and equipment that are to be furnished and installed by the Contractor.

1.4.1.4 Variation Requirements

Where a choice of materials or methods, or both, is permitted in this contract, the Contractor will be given the right to exercise the variation unless otherwise required by the specification.

1.4.2 Location

The work shall be located at the U. S. Fleet Activities Yokosuka, Yokohama North Dock, Yokohama Cold Storage, Tsurumi POL Depot, New Sanno, U. S. Forces Center, U.S. Embassy, Tokyo, Ikego Housing Area and Navy Annex, Negishi Dependent Housing Area, Azuma Storage Area (Hakozaki), Urago Storage Area, and Nagai ULM4. The exact location will be indicated on each task order and shown by the Contracting Officer.

1.5 CONTRACT DRAWINGS

The following drawings accompany this specification and are a part thereof.

a. Index of Contract Drawings:

DIV NO.	TITLE
A 1	TYPICAL FLOOR PLAN(1)
A 2	TYPICAL ELEVATION(1)
A 3	TYPICAL FLOOR PLAN(2)
A 4	TYPICAL ELEVATION(2)
A 5	TYPICAL FLOOR PLAN(3)
A 6	TYPICAL ELEVATION(3)
A 7	TYPICAL FLOOR PLAN(4)
A 8	TYPICAL ELEVATION(4)
A 9	TYPICAL PLAN AND ELEVATION
A10	TYPICAL FLOOR PLANS(5)
A11	TYPICAL ELEVATIONS(5-1)
A12	TYPICAL ELEVATIONS(5-2)
A13	TYPICAL LEAD BASED PAINT PORTIONS
A14	FENCE DETAIL
A15	ALUMINUM LOUVER DETAIL
A16	DETAILS OF COATINGS
A17	BALCONY DETAIL
A18	BUILDING NUMBER
A19	WALL REPAIR DETAIL
A20	CANOPY DETAIL
A21	REINFORCING BAR DETAIL
A22	U CUT DETAIL
A23	ACRYLIC LIGHT COVER
A24	ALUMINUM AIR VENT DETAIL
A25	SEALANT FOR WINDOW/DOOR
A26	DOOR DETAIL
A27	JOINT SEALANT DETAIL

1.6 PROJECT SCHEDULE AND TIME CONSTRAINTS

1.6.1 Completion Time

The time for completion of each task order is identified in the following table;

¥ Value of Task Order	Completion Time

Deleted space

¥3,000,000 or less	30 calendar days
¥3,000,001 to ¥6,000,000	60 calendar days
¥6,000,001 to ¥10,000,000	90 calendar days
¥10,000,001 above	120 calendar days

All orders are subject to the terms and conditions of this contract. The Contractor shall complete all the work ordered within the “Completion Time”, from the date of order to final Government acceptance of the work. When completion time is directed in each task order, the Contractor shall complete the work in accordance with each task order.

Christmas, Year end, and New Year holiday season is not count on these days.

1.6.2 Start of Work

After receipt of task order(s), The Contractor shall commence work and prosecute said work diligently, and to complete the entire work, which is to be ready for use not later than the time stated in the task order. The time stated for completion shall include final clean up of the premises.

1.7 PROJECT ENVIRONMENTAL GOALS

Contractor shall distribute copies of the Environmental Goals to each subcontractor and the Contracting Officer. The overall goal for design, construction, and operation is to produce a building that meets the functional program needs and incorporates the principles of sustainability. Specifically:

a. Preserve and restore the site ecosystem and biodiversity; avoid site degradation and erosion. Minimize offsite environmental impact.

b. Use the minimum amount of energy, water, and materials feasible to meet the design intent. Select energy and water efficient equipment and strategies.

c. Use environmentally preferable products and decrease toxicity level of materials used.

d. Use renewable energy and material resources.

e. Optimize operational performance (through commissioning efforts) in order to ensure energy efficient equipment operates as intended. Consider the durability, maintainability, and flexibility of building systems.

f. Manage construction site and storage of materials to ensure no negative impact on the indoor environmental quality of the building.

g. Reduce construction waste through reuse, recycling, and supplier take-back.

1.8 OCCUPANCY OF PREMISES

As specified in Section 01 14 00.00 33 “Work Restrictions.”

1.9 EXISTING WORK

In addition to "FAR 52.236-9, Protection of Existing Vegetation, Structures, Equipment, Utilities, and Improvements":

a. Remove or alter existing work in such a manner as to prevent injury or damage to any portions of the existing work which remain.

b. Repair or replace portions of existing work which have been altered during construction operations to match existing or adjoining work, as approved by the Contracting Officer. At the completion of operations, existing work shall be in a condition equal to or better than that which existed before new work started.

1.10 ON-SITE PERMITS

1.10.1 Utility Outage Requests and Utility Connection Requests

Work shall be scheduled to hold outages to a minimum. Utility outage, Government operation outages are specified in section 01 14 00.00 33 “Work Restriction.”

1.10.2 Hot Work Permit

Hot work permit are specified in section 01 35 26.00 33 “Governmental Safety Requirement”.

1.11 CONCILIATION CLAUSE

a. If the parties to this contract by mutual consent, which consent shall be memorialized in writing, agree to use the United States - Japan Joint Committee as a means of Alternative Dispute Resolution (ADR) in accord with the DISPUTES clause of this contract, then disagreement arising under this contract that is not yet resolved by the parties to this contract may be submitted to the United States - Japan Joint Committee for conciliation in accordance with paragraph 10, Article XVIII, of the Status of Forces Agreement under Article VI of the Treaty of Mutual Cooperation and Security between Japan and United States of America.

b. The decision of the United States - Japan Joint Committee shall be non-binding on the parties, and as such, the United States - Japan Joint Committee’s consideration of a dispute shall not prejudice any right which the parties to the contract may have to file a civil suit with either the United States Armed Services Board of Contract Appeals or the United States Court of Federal Claims.

c. Upon filing a request for conciliation with the Joint Committee, the Contractor shall immediately notify the FEAD (ROICC) in writing of the request.

PART 2 PRODUCTS

Not used.

PART 3 EXECUTION

3.1 EXISTING CONDITIONS

Before beginning any work, survey the site and examine the drawings and specifications to determine the extent of the work.
The Contractor shall verify existing conditions and report any discrepancies to the Contracting Officer prior to the commencement of work.

-- End of Section --

SECTION 01 14 00.00 33

WORK RESTRICTIONS

PART 1 GENERAL

Unless otherwise specified in the Task Order, requirments of Work Restrictions shall comply with this section.

1.1 SUBMITTALS

Government approval is required for submittals with a "G" designation; submittals not having a "G" designation are for Contractor Quality Control approval. When used, a designation following the "G" designation identifies the office that will review the submittal for the Government. The following shall be submitted in accordance with Section 01 33 00.00 33 SUBMITTAL PROCEDURES:

SD-01 Preconstruction Submittals:

List of Contact Personnel; G (FEAD)

Vehicle list; G (FEAD)

Employee List for High Restricted area; G (FEAD)

1.2 RESTRICTIONS ON OPERATIONS

1.2.1 Coordination with Other Work

The Contract Clause entitled "Other Contracts".

Special scheduling requirements will be indicated on Task Order.

1.3 CONTRACTOR ACCESS AND USE OF PREMISES

1.3.1 Activity Regulations

Ensure that Contractor personnel employed on the Activity become familiar with and obey Activity regulations including safety, environment, fire, traffic and security regulations. Provide written "General Authorization to Work on Base" to the Security Office of the Base where the Project will be performed. Keep within the limits of the work and avenues of ingress and egress. To minimize traffic congestion, delivery of materials shall be outside of peak traffic hours (6:30 to 8:00 a.m. and 3:30 to 5:00 p.m.) unless otherwise approved by the Contracting Officer. Wear safety gears (such as hard hats, high visibility vest) with the Contractor's name prominently displayed, in construction site and designated areas. Do not enter any restricted areas unless required to do so and until cleared for such entry. The Contractor's equipment shall be conspicuously marked for identification.

1.3.1.1 Subcontractors and Personnel Contacts

Within 15 days after the date of Award, furnish a list of contact personnel of the Contractor and subcontractors including the names, job titles, addresses and telephone numbers for use in the event of an emergency. As changes occur and additional information becomes available, correct and change the information contained in previous lists.

1.3.1.2 Vehicle List

Submit an original list of vehicles to be utilized at the work site with the following information for each vehicle:

a. Make
b. Year
c. Model
d. License number
e. Registered owner
f. Current BASE pass expiration date.

1.3.1.3 Identification Badges

Identification badges will be issued to the Contractor and his employees in accordance with the Base Security Regulations. A copy of the security regulations may be obtained from the security office. All badges must be returned or accounted for to the department of Public Safety's Pass and Identification Office upon expiration of the badge or contract, or termination of the employee.

1.3.1.4 Fleet and Industrial Supply Center (FISC) Safety/Security Policy

Non-FISC personnel requiring access to FISC property shall check in at the FISC office, at the beginning and end of each work day. Keys to Fuel Facilities will be issued daily between the hours of 6:30 a.m. and 4:00 p.m. Keys must be returned by 7:00 p.m. the same day. An after-hours drop box is located outside the Building FISC office.
At the end of each workday, update the check-in board in the FISC Operations Division and provide information as follows for the next workday:

g. Contract name or number
h. Name of person responsible for work crew(s)
i. Emergency phone numbers
j. Number of workers in crew
k. Location of work
l. Type of work to be conducted
m. FISC support required:
    (1) Transportation
    (2) Draining of pipe
    (3) Outages
    (4) Elevator use
    (5) Other

1.3.1.5 Fuel Storage Area Requirement:

Route hot work permits to the Base Fire Department for approval. After approval by the Base Fire Department, submit a copy of the permit to the Contracting Officer.

1.3.1.6 Waterborne Transportation for Azuma Island Work

The Government will provide necessary daily transportation for personnel, for Azuma Island work, providing notification is given to the Government not less than 7 calendar days in advance. The Government will provide this daily waterborne transportation at no cost to the Contractor between Arai Dock and the U.S. Navy Azuma Petroleum Area. Contractor's personnel shall possess a valid security pass to the Petroleum area prior to boarding at Arai Dock. Transportation will be by small boat with a capacity of about 20 people. Twenty-four hours shuttle service is available.

The Government will also provide waterborne transportation for the Contractor’s truck and it’s operator between the ramp adjacent to Berth 5 at the U.S. Fleet Activities, Yokosuka, and the U.S. Navy Azuma Petroleum Area, at no cost to the Contractor providing written notification specifying the size of the truck (under 4 ton) for this movement is submitted not less than 7 calendar days in advance.

If above sea transportation by the government can not use, the contractor shall be required the sea transportation of the contractor’s expense. The vehicular access and circulation routes to Azuma Island shall be directed by the Contracting Officer.

1.3.1.7 No Smoking Policy

Smoking is prohibited within and outside of all buildings on installations under the cognizance of NAVFAC FE except in designated smoking areas. This applies to existing buildings, buildings under construction and buildings under renovation. Discarding tobacco materials other than into designated tobacco receptacles is considered littering and is subject to fines. The Contracting Officer will identify designated smoking areas.

1.3.2 Shipyard Regulations

Ensure that Contractor personnel employed on the Shipyard become familiar with and obey Shipyard regulations. Do not enter any restricted areas unless required to do so and until cleared for such entry. The Contractor's equipment shall be conspicuously marked for identification. Comply with the following conditions:

a. Restrict employees/representatives to the work site and control travel directly to and from the work site.

b. Entry into the dry-dock: Entry into the dry-dock requires notification and approval by the Dock Master via the FEAD.

c. Restore all traffic/parking/security signs and markings, including space numbers, designations, and lines, to their original form if such signs/markings are defaced or deleted during construction/repair.

d. Be responsible for control and security of Contractor-owned equipment and materials at the work site. Report immediately missing/lost/stolen property to the Contracting Officer as each case occurs.

e. Ensure that no opening in the roof/walls/windows/fence of the building exist at the end of the work day and do not exist where penetration is possible during non-working hours. If the building cannot be secured at the end of the workday, coordinate action with the Contracting Office to

notify the cognizant code to arrange for a security watch by their personnel.

1.3.3 Entry to Radiologically Controlled Areas

Contractor personnel shall not, under any circumstances, enter a radiologically controlled area or cross any posted radiological boundary. This paragraph applies to all phases of contract work. Radiation areas are posted with signs consistent with OSHA requirements. Ensure that employees are familiar with the radiation signs and symbols. All personnel entering the radiologically controlled areas shipyard for the first time are required to receive radiological indoctrination training.
Should contract workers encounter radiological postings and/or boundaries which appear to limit their ability to access or carry out their intended work, they shall notify their contract administrator for resolution of the problem.

1.3.3.1 Radioactive Materials and Equipment

All testing equipment, containing a radioactive source, shall be operated in accordance with an approved radioactive equipment plan. This plan shall be submitted to the Contracting Officer and approved by the Radiation Officer, prior to bringing the equipment into the shipyard. This plan shall include:

a. The name and type of equipment.
b. The type and size of radiation source.
c. The dates and locations of the equipment's usage.
d. The radiological controls that the Contractor will use while operating the equipment.

A different radioactive equipment plan will be required for each different type of equipment, type of radioactive source, or size of radioactive source. A data sheet of for each piece of new radioactive equipment shall be submitted to the Contracting Officer to forward to the shipyard's Radiation Safety Officer. The data sheet shall contain the following information:

a. Name of equipment.
b. Name and address of equipment manufacturer.
c. Type and size of radiation source.
d. The location of the installed radioactive equipment (i.e. building no., floor, code/shop area).

1.3.4 Ordinance Area Regulations

1.3.4.1 Ordinance Area Regulations

Under the direction of Station Fire Department and following;

(1) Use of cigarette lighters or matches is not allowed. Personal lighters and matches shall be turned-in to the FACP guard at the main gate.

(2) Use of cameras shall not be allowed unless authorized by the NMC Officer in Charge.

(3) Use of cell phones shall not be authorized. Phones will be shut off and left with the FACP guard at the main gate.

(4) Smoking shall not be allowed except in designated smoking area and shack.

(5) The contractor shall receive a safety and environment brief prior to commencement of work.

(6) Routine breaks shall be taken in the designated contractor's office.

(7) The contractor is only permitted to work in the area of responsibility and no other areas within the compound.

(8) Regular working hours shall consist of 8 hours (0800-1645), Monday through Friday, except Government holidays. Work during Government holidays and weekends will be on a case by case basis.

(9) Open storage area at limited area of open storage for materials and equipment will be available upon request.

(10) Construction of any type of temporary buildings at the Ordnance area is prohibited. However, a pre-fabricated office building may be placed on the facility with concurrence of the NMC Officer in Charge.

(11) Hand held radios are not permitted for use without prior approval.

(12) Material removed or demolished as a result of the construction project shall be disposed of outside of government controlled areas in a permitted, licensed facility. If the worker encounters suspicious hazardous waste, notify to the Contracting Officer immediately. The Government will direct the handling of the suspicious hazardous waster as described in the paragraph "Unforeseen Hazardous Material" of Section 01 35 26.00 33 "GOVERNMENTAL SAFETY REQUIREMENTS".

(13) Hot work such as gas cutting, welding, etc. is not allowed without written authorization (HOT WORK CHIT). These must be approved in advance of work commencing. Fire watches are required at each location hot work is being performed.

(14) Burning and blasting is not allowed.

(15) Requirements for operating portable engine-driven equipment onboard an ordnance facility can be provided as required.

1.3.5 Working Hours

Regular working hours shall consist of an 8 3/4 hour period established by the Contracting Officer, between 8 a.m. and 4:45 p.m. unless otherwise specified in the Task Order, Monday through Friday, excluding Government holidays.

The project site will be available during regular working hours established by the FEAD during regular working hours.

1.3.6 Work Outside Regular Hours

Work outside regular working hours requires Contracting Officer approval. If the Contractor desires to carry on work outside regular hours, including Saturdays, Sundays, and Government holidays, submit a written justification giving the benefit to the Government, specific dates, hours, location, type of work to be performed, contract number and project title for approval, and submit request outside regular hours 96 hours in advance of the date the work will start. During periods of darkness, light the different parts of the work in an approved manner. All work outside of regular hours is subject to approval by the FEAD. All work outside of regular hours must be able to demonstrate a benefit to the Government. The Contractor must attach a Safety Brief and the Activity Hazard Analysis (AHA) for work that will be done outside regular working hours. The Safety Brief will be signed by the employees performing the work and submitted to the Government’s Representative.

1.3.7 Occupied and Existing Building[s]

a. The Contractor shall be working in an existing building or around existing buildings which are occupied. Do not enter the buildings without prior approval of the Contracting Officer. Before work is started, the Contractor shall arrange with the Contracting Officer a sequence of procedure, means of access, space for storage of materials and equipment, and use of approaches, corridors, and stairways. The Contractor shall maintain the required means of egress and required fire protection features for the portion occupied or alternate life safety measures acceptable to the Base Fire Department.

b. Detail of Housing Occupancy notifications: Make, distribute and stick the notification letters for each required actions (See below as samples) for all units including vacant houses on the front door. Housing Office will assist in contacting the resident if the contractor is unable to reach the residents. Regarding the scheduling and daily interaction with residents for the purpose of the contract completion, this is the contractor's responsibility.

   1. Power outage schedule
   2. Date/time schedule for the contractor's work (including access into their backyard)
   3. Partial-final inspection date for occupied units.
   4. Others as needed.

   The contractor must make a draft notification for Housing Officer's review. Once the notification is finalized, it is the contractor's responsibility to issue the notifications to each of the units the contract is to cover.

   The scheduled times where residents will be impacted must be properly indicated in the notification to include the date of partial final inspection.

   The POC information for the contractor should be indicated on the notification for rescheduling or complaint resolutions. If the scope of

the complaint is above the contractor's capability, then at that time, the POC refers the resident to Housing. The contractor must also inform the Contracting Office representative.

c. Do not interrupt occupant’s/resident’s access to main entrance during construction. The Contractor shall provide temporary covering, partition, and other protections if necessary for secure occupant/resident safety and convenience. The Contractor shall provide 10 days advance notice to the Contracting Officer of scheduled work for each entrance.

d. Prevent the spread of dust and debris to occupied portions of the project area and avoid the creation of a nuisance in the surrounding area. Do not use water if it results in hazardous or objectionable conditions such as, but not limited to, ice, flooding, or pollution. Vacuum and dust the work area daily.

e. For a project performed in the US Naval Hospital, vacuum and dust the work area daily using with, UL 586 or JIS Z 4812, High Efficiency Particulate Air (HEPA) filtered vacuum.

1.3.8 Utility Cutovers and Interruptions

This project will not permit interruptions to utility services and the Government’s regular operations, except the following items and restriction items specified herein before;

a. The Government will allow to the Contractor the utility cutovers and interruptions after normal working hours or on Saturdays, Sundays, and Government holidays. Conform to procedures required in the paragraph "Work Outside Regular Hours."

b. Ensure that new utility lines are complete, except for the connection, before interrupting existing service.

c. Interruption to utilities will be indicated in Task Order.

d. Interruption to Fire Alarm System: Deactivation of fire alarm system in this building will be permitted during regular working hours. Such interruption shall be further limited to 4 hours and need to observe it by contractor's fire watcher. This time limit includes time for deactivation and reactivation. The system shall be activated during the period when the Contractor’s workers are not working and during outside regular working hours.

Deactivation of fire alarm system in this building will be permitted during the Government’s non-working hours. If an outage permit during off- government business is approved by Fire Department, the Contractor will be permitted to work without fire watcher at Contractor’s risk after Government business and on weekends when the building is not occupied completely.

e. Interruption to Telephone and LAN Service: Shall be consulted by the Base Communication Office (BCO) prior to interruption. Any of the telephone and LAN system components, including cabinets, box, conduits, and handholes involved telephone and LAN system shall not be touched without the BCO approval.

BCO, Yokosuka Head Office DSN: 243-5031 (Com: 046-816-5031)
BCO, Atsugi Branch Office DSN: 264-3559 (Com: 0467-63-3559)

BCO personnel will attend project site as a witness at the interruption to “Telephone and LAN service.”

Some electric or electronic appliances working with telephone and LAN system shall be also consulted by the BCO prior to site survey.

f. Interruption to Mass Notification System: Deactivation of Mass Notification system in this building will be permitted during regular working hours. Such interruption shall be further limited to 4 hours. This time limit includes time for deactivation and reactivation. The system shall be activated during the period when the Contractor’s workers are not working and during outside regular working hours.

1.4 SECURITY REQUIREMENTS

Contract Clause "FAR 52.204-2, Security Requirements and Alternate II," "FAC 5252.236-9301, Special Working Conditions and Entry to Work Area," and the following apply:

1.4.1 Security area requirement

Some areas and Buildings are secured areas. The Contractor shall comply with the security requirements as indicated on Task Order.

1.4.2 Access to Unclassified Information

Access to unclassified U.S. Navy shipbuilding, conversion, or repair technology and related technical information manuals, documents, drawings, plans, specifications, and other unclassified information is restricted to official need-to-know basis, designated by physical markings to show the appropriate control designations. Handle, control, and safeguard to prevent oral, visual, and documentary disclosure to the public, to foreign sources, and to personnel not having an official need-to-know. Return this information to the naval Shipyard upon completion of contracted work, except when specific retention authorization is granted by the Contracting Officer's Security Representative.

1.4.3 Photographs

Unofficial photograph is prohibited in the Naval Shipyard. When operationally required, submit a written request containing specific justification and details to the Security Officer prior to release.

1.4.4 Employee List for High Restricted Area

A list of all employees to be engaged in the performance of work shall be furnished to the Security Department.

1.5 TRAFFIC CONTROL

The Contractor shall maintain one operational traffic lane for the duration of the construction period.

1.6 SOUND LIMITATION IN RESIDENCE AREA

As specified in Section 01 57 19.00 33 “TEMPORARY ENVIRONMENTAL CONTROLS”.

PART 2 PRODUCTS

Not used.

PART 3 EXECUTION

Not used.

-- End of Section --

SECTION 01 20 00.00 33

PRICE AND PAYMENT PROCEDURES

PART 1 GENERAL

1.1 REFERENCES

The publications listed below form a part of this specification to the extent referenced. The publications are referred to within the text by the basic designation only. The latest version of the publication at time of award shall be used.

U.S. ARMY CORPS OF ENGINEERS (USACE)

EP-1110-1-8	Construction Equipment Ownership and Operating Expense Schedule, Vol 1-12

1.2 SUBMITTALS

Government approval is required for submittals with a "G" designation; submittals not having a "G" designation are for Contractor Quality Control approval. When used, a designation following the "G" designation identifies the office that will review the submittal for the Government. The following shall be submitted in accordance with Section 01 33 00.00 33 SUBMITTAL PROCEDURES:

SD-01 Preconstruction Submittals

Cost Loaded CPM; G (FEAD)

1.3 SCHEDULE OF PRICES

1.3.1 Data Required

Within 15 days after the date of Award of individual Task Orders, the Contractor shall prepare and submit to the FEAD the Cost Loaded Critical Path Method (CPM) Schedule on the forms furnished for this purpose. The schedule shall consist of a detailed breakdown of the contract price, giving the quantities for each of the various kinds of work; the unit prices; and the total prices, therefore. The required schedule must be based on the actual breakdown of the bid price. The format, content, and number of copies required will be prescribed by the FEAD and will be subject to its approval. The submission of the required data shall not otherwise affect the contract terms. Payments will not be made pursuant to the paragraph of the GENERAL PARAGRAPHS entitled "Payment to Contractor" until the Cost Loaded CPM Schedule has been submitted and approved.

1.3.2 Submittal Instructions

Furnish five copies of the Cost Loaded CPM Schedule in accordance with the paragraph entitled "Data Required." Payments will not be made pursuant to

the paragraph entitled "Payments to the Contractor" until the Cost Loaded CPM Schedule has been approved.

1.3.3 Schedule Instructions

Payments will not be made until the Cost Loaded CPM Schedule has been submitted to and accepted by the Contracting Officer. Identify the cost for site work, and include incidental work to the 1.5 m (5 ft) line. Identify costs for the building(s), and include work out to the 1.5 m (5 ft) line. Work out to the 1.5 m (5 ft) line shall include construction encompassed within a theoretical line 1.5 m (5 ft) from the face of exterior walls and shall include attendant construction, such as pad mounted HVAC cooling equipment, cooling towers, and transformers placed beyond the 1.5 m (5 ft) line.

1.4 CONTRACT MODIFICATIONS

In conjunction with the Contract Clause "DFARS 252.236-7000, Modification Proposals-Price Breakdown," and where actual ownership and operating costs of construction equipment cannot be determined from Contractor accounting records, equipment use rates shall be based upon the applicable provisions of the EP-1110-1-8.

1.5 CONTRACTOR'S INVOICE AND CONTRACT PERFORMANCE STATEMENT

1.5.1 Content of Invoice

The Contractor’s request for progress payments will be processed in accordance with the Contract Clauses “52.232-5 Payments Under Fixed-Price Construction Contracts” and “52.232-27, Prompt Payment Construction Contracts.” The contractor shall submit payment request through Wide Area Workflow (WAWF) in accordance with Contract Clauses “252.232-7003 Electronic Submission of Payment Requests and Receiving Reports” and “252.232-7006 wide Area Workflow Payment Instructions” and provide the following documents with submission:

Following table is the matrix for invoice submittal requirement.

Invoice Type / Required Document	Progress	1ST/Final	Final		
Contractor’s Invoice (7300/30)	Yes	Yes	Yes		
QC Certificate	Yes	Yes	Yes		
Contract Performance Statement(7300/31)	Yes	Yes	Yes		
Representation of ocean transportation (if required)	No	Yes	Yes		
Contractor’s Final Release	No	Yes	Yes		
Accepted Cost-Loaded CPM Schedule	Yes	Yes	Yes		
Contractor Safety Self Evaluation Checklist	Yes	Yes	Yes		

Contract performance statement (7300/31) must be provided directly to the representative construction manager prior to submission of the invoice. Once receipt the contract performance statement (7300/31) by the

construction manager, the contractor shall then submit the invoice and attach signed contract performance statement (7300/31) in WAWF.

1.5.2 Invoice Frequency

Contractors are encouraged to invoice monthly for all work completed in accordance with contract and task order requirements during the preceding month. First/Final invoices should only be utilized when the job size is sufficiently small that multiple invoicing shall be construed to conflict with paragraph 1.6, “PAYMENT TO THE CONTRACTOR”, or its subparagraphs.

1.6 PAYMENTS TO THE CONTRACTOR

Payments will be made on submission of itemized requests by the Contractor which comply with the requirements of this section, and will be subject to reduction for overpayments or increase for underpayments made on previous payments to the Contractor.

1.6.1 Obligation of Government Payments

The obligation of the Government to make payments required under the provisions of this contract will, at the discretion of the Contracting Officer, be subject to reductions and/or suspensions permitted under the FAR and agency regulations including the following in accordance with "FAR 32.503-6:

a. Reasonable deductions due to defects in material or workmanship;

b. Claims which the Government may have against the Contractor under or in connection with this contract;

c. Unless otherwise adjusted, repayment to the Government upon demand for overpayments made to the Contractor; and

d. Failure to provide up to date record drawings not current as stated in Contract Clause "FAC 5252.236-9310, Record Drawings."

1.6.2 Payment for Onsite and Offsite Materials

Progress payments may be made to the contractor for materials delivered on the site, for materials stored off construction sites, or materials that are in transit to the construction sites under the following conditions:

a. FAR 52.232-5(b) Payments Under Fixed Price Construction Contracts.

b. Materials delivered on the site but not installed, including completed preparatory work, and off-site materials to be considered for progress payment shall be major high cost, long lead, special order, or specialty items, not susceptible to deterioration or physical damage in storage or in transit to the construction site. Examples of materials acceptable for payment consideration include, but are not limited to, structural steel, non-magnetic steel, non-magnetic aggregate, equipment, machinery, large pipe and fittings, precast/prestressed concrete products, plastic lumber (e.g., fender piles/curbs) and high-voltage electrical cable. Materials not acceptable for payment include consumable materials such as nails, fasteners, conduits, gypsum board, glass, insulation, and wall coverings.

c. Materials to be considered for progress payment prior to installation shall be specifically and separately identified in the Contractor's

estimates of work submitted for the Contracting Officer's approval in accordance with Cost Loaded CPM Schedule requirement of this contract. Requests for progress payment consideration for such items shall be supported by documents establishing their value and that the title requirements of the clause at FAR 52.232-5 have been met.

d. Materials are adequately insured and protected from theft and exposure.

e. Provide a written consent from the surety company with each payment request for offsite materials.

f. Materials to be considered for progress payments prior to installation shall be located and stored in Japan. Other locations are subject to written approval of the Contracting Officer.

PART 2 PRODUCTS

Not used.

PART 3 EXECUTION

Not used.

-- End of Section --

SECTION 01 30 00.00 33

ADMINISTRATIVE REQUIREMENTS

PART 1 GENERAL

1.1 REFERENCES

The publications listed below form a part of this specification to the extent referenced. The publications are referred to within the text by the basic designation only. The latest version of the publication at time of award shall be used.

U.S. NATIONAL ARCHIVES AND RECORDS ADMINISTRATION (NARA)

15 CFR 772	Definitions of Terms
15 CFR 773	Special Licensing Procedures

1.2 SUBMITTALS

Government approval is required for submittals with a "G" designation; submittals not having a "G" designation are for Contractor Quality Control approval. When used, a designation following the "G" designation identifies the office that will review the submittal for the Government. The following shall be submitted in accordance with Section 01 33 00.00 33 SUBMITTAL PROCEDURES:

SD-01 Preconstruction Submittals

Certificate of Insurance; G (FEAD)

Progress and completion pictures; G (FEAD)

View location map; G (FEAD);

Limited Authorization for Use of Hardcopy Data and Electronic Data; G (FEAD)

1.3 VIEW LOCATION MAP

Submit to the Contracting Officer, prior to or with the first digital photograph submittals, a sketch or drawing indicating the required photographic locations. Update as required if the locations are moved.

1.4 PROGRESS AND COMPLETION PICTURES

Photographically document site conditions prior to start of construction operations. Provide monthly, and within one month of the completion of work, digital photographs, 1600x1200x24 bit true color minimum resolution in JPEG file format showing the sequence and progress of work. Take a minimum of 20 digital photographs each week throughout the entire project from a minimum of ten views from points located by the Contracting Officer. Submit a view location sketch indicating points of view. Submit with the monthly invoice two sets of digital photographs each set on a separate CD-R,

cumulative of all photos to date. Indicate photographs demonstrating environmental procedures.

Photographs for each month shall be in a separate monthly directory and each file shall be named to indicate its location on the view location sketch. The view location sketch shall also be provided on the CD as digital file. All file names shall include a date designator. Cross reference submittals in the appropriate daily report. Photographs shall be provided for unrestricted use by the Government.

1.5 MINIMUM INSURANCE REQUIREMENTS

Procure and maintain during the entire period of performance under this contract the following minimum insurance coverage:

a. Comprehensive general liability: ¥50,000,000 per occurrence

(1) Certificate of Insurance for Comprehensive general liability

Certificate of insurance shall indicate *Contract Number, Contract Title, Insurance Limit,* and *Insurance coverage*.

Certificate of insurance shall provide for at lease 30 days written notice to the Contracting Officer by the insurance company prior to cancellation or material change in policy coverage.

b. Automobile liability: ¥20,000,000 per person, ¥50,000,000 per occurrence for bodily injury, ¥2,000,000 per occurrence for property damage

c. Workmen's compensation as required by Japanese law or Federal and State workers' compensation and occupational disease laws.

d. Employer's liability coverage of ¥10,000,000.

e. Others as required by Japanese law.

1.6 CONTRACTOR PERSONNEL REQUIREMENTS

1.6.1 Asbestos Containing Material

All contract requirements of Section 02 82 16.00 33, "Engineering Control of Asbestos Containing Materials" assigned to the Private Qualified Person (PQP) shall be accomplished directly by a first tier subcontractor.

1.7 SUPERVISION

Provide at least one (1) qualified Project Manager and one (1) on-site Project Superintendent per project capable of reading, writing, and conversing fluently in both English and Japanese languages or furnish interpreter as descried herein after. The Project Manager must have a minimum 10 years experience as a Project Manager or Superintendent on projects like this contract or similar in size and complexity. The Project Superintendent must have a minimum of 10 years experience as a Superintendent on projects similar in size and complexity.

In addition to the above experience requirements, the Project Manager and on-site Project Superintendent shall complete the course entitled "Construction

Quality Management for Contractors" or equivalent.
The Project Manager in this context shall mean the individual with the responsibility for the overall management of the project and the Project Superintendent shall mean the individual with the responsibility for quality and production. Both the Project Manager and Project Superintendent are subject to removal by the Contracting Officer for non-compliance with requirements specified in the contract and for failure to manage the project to insure timely completion. Furthermore, the Contracting Officer may issue an order stopping all or part of the work until satisfactory corrective action has been taken. No part of the time lost due to such stop orders shall be made the subject of claim for extension of time for excess costs or damages by the Contractor.

Approval of Project Manager and on-site Project Superintendent is required prior to start of construction. Provide resumes for the proposed Project Manager and on-site Project Superintendent describing their experience with references and qualifications to the Contracting Officer for approval. The Contracting Officer reserves the right to interview the proposed Project Manager and on-site Project Superintendent at any time in order to verify the submitted qualifications.

1.8 PERFORMANCE EVALUATION

Contractor’s performance will be evaluated using the contractor performance evaluation report entry system located on the website http://www.cpars.gov/cparsmain.htm On-line training for Contractor’s personnel is available on the website. Prior to commencement of work, the Contractor is required to provide the government with the name, phone number and e-mail address of the “Contractor’s Representative” that will be responsible for receipt and review of draft performance evaluations prepared by the government. It is the Contractor’s responsibility to keep this contact information current. After contractor performance evaluation is completed, it will be placed in the Federal Government’s Past Performance Information Retrieval System (PPIRS) for use by source selection officials when considering contractors for award of new contracts.

1.9 INTERPRETER

The Contractor shall furnish the service of an interpreter on the job. This interpreter shall have strong knowledge of the English language in terms of writing, listening, speaking and reading skills. Interpreter's English skills shall also be well suited to the construction industry. If at any time the FEAD feels the Contractor's interpreter is unable to perform the duties required of him/her, the FEAD will ask for his/her immediate replacement. When the QC manager or the project superintendent talks with the Government representative, on-site or off-site, they shall be accompanied by their interpreter.

1.10 PRECONSTRUCTION CONFERENCE

After award of the contract but prior to commencement of any work at the site, meet with the Contracting Officer to discuss and develop a mutual understanding relative to the administration of the value engineering and safety program, preparation of the schedule prices, shop drawings, and other submittals, scheduling programming, and prosecution of the work.
Major subcontractors who will engage in the work shall also attend.

1.11 FACILITY TURNOVER PLANNING MEETINGS (NAVFAC RED ZONE - NRZ)

Key personnel will meet to identify strategies to ensure the project is carried to expeditious closure and turnover to the Client. Start the turnover process at the Pre Construction Conference meeting and convene at the Facility Turnover Meetings once the project has reached approximately 75 percent completion or three to six months prior to Beneficial Occupancy Date (BOD), whichever comes first. The Contracting Officer's Representative will lead the meetings and guide discussions based on an agenda provided by the Government. The facility Turnover effort shall include the following:

a. Pre Construction Meeting - Contracting Officer's Technical Representative (COTR) will provide the NRZ Checklist and the Contractor, Client, and NAVFAC Representatives will compare Contractor's schedule to NRZ Checklist items.

b. Facility Turnover Meetings

(1) Fill in the NRZ Checklist including Contractor, Client, and NAVFAC Checklist Items and assign a person responsible for each item and a due date. The Contractor's Representative will facilitate the assignment of responsibilities, fill out the NRZ Checklist, and discuss "Interim DD From 1354" requirements.

(2) Review the Contractor's updated schedule. The Contractor shall develop a POAM for the completion of all Contractor, Client, and NAVFAC Checklist items.

(3) Confirm that all NRZ Checklist items will be completed on time for the scheduled Facility Turnover.

1.12 PARTNERING

To most effectively accomplish this contract, the Government requires the formation of a cohesive partnership within the Project Team whose members are from the Government, the Contractor and their Subcontractors. Key personnel from the Supported Command, the End User (who will occupy the facility), NAVFAC (Echelon III and IV), the Navy Region/Installation, the Contractor and Subcontractors, and the Designer of Record will be invited to participate in the Partnering process. The Partnership will draw on the strength of each organization in an effort to achieve a project that is without any safety mishaps, conforms to the Contract, and stays within budget and on schedule. The Contracting Officer will provide Information on the Partnering Process and a list of key and optional personnel who should attend the Partnering meeting.

1.12.1 Informal Partnering

The Contracting Officer will organize the Partnering Sessions with key personnel of the project team, including Contractor personnel and Government personnel.

The Initial Partnering session should be a part of the Pre-Construction Meeting. Partnering sessions will be held at a location agreed to by the Contracting Officer and the Contractor (typically a conference room provided by the PWD FEAD/ROICC office or the Contractor).

The Initial Informal Partnering Session will be conducted and facilitated using electronic media (a video and accompanying forms) provided by the Contracting Officer.

The Partners will determine the frequency of the follow-on sessions.

1.13 AVAILABILITY OF CADD DRAWING FILES

After award and upon request, the electronic "Computer-Aided Drafting and Design (CADD)" drawing files, AUTOCADD 2004 U.S version, will only be made available to the Contractor for use in preparation of construction data related to the referenced contract subject to the following terms and conditions.

Data contained on these electronic files shall not be used for any purpose other than as a convenience in the preparation of construction data for the referenced project. Any other use or reuse shall be at the sole risk of the Contractor and without liability or legal exposure to the Government. The Contractor shall make no claim and waives to the fullest extent permitted by law, any claim or cause of action of any nature against the Government, its agents or sub consultants that may arise out of or in connection with the use of these electronic files. The Contractor shall, to the fullest extent permitted by law, indemnify and hold the Government harmless against all damages, liabilities or costs, including reasonable attorney's fees and defense costs, arising out of or resulting from the use of these electronic files.

These electronic CADD drawing files are not construction documents. Differences may exist between the CADD files and the corresponding construction documents. The Government makes no representation regarding the accuracy or completeness of the electronic CADD files, nor does it make representation to the compatibility of these files with the Contractors hardware or software. In the event that a conflict arises between the signed and sealed construction documents prepared by the Government and the furnished CADD files, the signed and sealed construction documents shall govern. The Contractor is responsible for determining if any conflict exists. Use of these CADD files does not relieve the Contractor of duty to fully comply with the contract documents, including and without limitation, the need to check, confirm and coordinate the work of all contractors for the project.

If the Contractor uses, duplicates and/or modifies these electronic CADD files for use in producing construction data related to this contract, all previous indicia of ownership (seals, logos, signatures, initials and dates) shall be removed.

1.14 LIMITED AUTHORIZATION FOR USE OF HARDCOPY DATA AND ELECTRONIC DATA

The Contractor shall sign the “Limited Authorization for Use of Hardcopy Data” and the “Limited Authorization for Use of Electronic Data” attached end of this section, before the AUTOCAD files are released to the Contractor.

1.15 ELECTRONIC MAIL (E-MAIL) ADDRESS

The Contractor shall establish and maintain electronic mail (e-mail) capability along with the capability to open various electronic attachments

in Microsoft, Adobe Acrobat, and other similar formats. Within 10 days after contract award, the Contractor shall provide the Contracting Officer a single (only one) e-mail address for electronic communications from the Contracting Officer related to this contract including, but not limited to contract documents, invoice information, request for proposals, and other correspondence. The Contracting Officer may also use email to notify the Contractor of base access conditions when emergency conditions warrant, such as hurricanes, terrorist threats, etc. Multiple email address will not be allowed.

It is the Contractor's responsibility to make timely distribution of all Contracting Officer initiated e-mail with its own organization including field office(s). The Contractor shall promptly notify the Contracting Officer, in writing, of any changes to this email address.

PART 2 PRODUCTS

Not used.

PART 3 EXECUTION

Not used.

-- End of Section --

Resource Document for B-1.6.11
18 March 2008

NRZ Checklist/POAM Items

The tables below provide typical NRZ checklist items for contractor, Client, and NAVFAC actions (Tables 1, 2, and 3, respectively). Items listed on the checklists are required to remain on the checklists if they are part of the project/contract or required by construction convention. Items not listed on the checklists, but required in the contract or by construction convention, must be added to the checklists by the contractor, Client and NAVFAC. Checklists are applicable to all contracts no matter what Category of Work.

The Point of Contact and due date shall initially be determined during the Facility Turnover Planning Meeting by the NAVFAC, client and contractor leads. During execution of the NRZ process, for each item on the entire list, the Construction Manager (CM) shall indicate date completed and initial to indicate completion of the item. If a party fails to complete an item by the due date, this should be noted on the checklist and new due date established and indicated. The completed NRZ Checklist/POAM shall be placed in the contract file.

Table 1

Contractor Checklist Items	Point of Contact	Due Date	Actual Complete Date	CM Initials	Notes
a. Construction Completion Schedule					
b. Facility Delivery Closeout:					
Duct Air Leakage Testing					
HVAC System Test & Balance					
ACATS Controls Testing					
Conduct Second Seasons TAB					
Electrical Systems Testing					
Final utility systems connections (power, water, etc.)					
Superchlorination of potable water systems					
Plumbing / Other Mechanical Testing					
Elevator Certification(s)					
Specialized Equipment & Systems Inspections (Boilers, UPV, etc.)					

Resource Document for B-1.6.11
18 March 2008

Fire Protection Systems Inspections and Performance Verification							
Communications / IT Systems Testing							
Security Systems Testing							
Other Specified Building Performance Requirements							
c. Other Contractor Items:							
Delivery of O&M Manuals							
Delivery of Equipment/Product Warranty List/Tag							
Provide completed LEED Documentation							
O&M/OMSI Training of Navy Personnel							
Site Restoration, if applicable							
Landscaping Complete							
Pre-Final Inspection							
Final Inspection and Acceptance							
Delivery of Spare Parts, Extra Stock, Special Tools, etc							
Delivery of As-Built Drawings							
Delivery of Utility Record Drawings (if applicable)							
Delivery of Utility As-Built Drawings (if applicable)							
Beneficial Occupancy Date (BOD)							
Final Demobilization and Clean-up Completed							
Remove Construction Fence & Associated Coordination							
Pre-warranty Conference							
Project Close-out Meeting							
Coordination and Delivery of Facility Signage							
Final Cleaning							
Replace Construction Lock Cores and Re-keying							
Punch List Completion							
Provide DD1354 to Government CM							

Table 2

Client Checklist Items	Point of Contact	Due Date	Actual Complete Date	CM Initials	Notes
Modification to FSC or BOSC to maintain/service new facility -Telephone service contract -Utilities service contract -Custodial service contract					
Installation of communications for phones and computers					
NMCI Installations or other networks					
Delivery and installation of client furnished furniture					
Delivery and installation of client furnished equipment					
User move-in					
GFE status/delivery schedule (GFCI, GFGI)					
Coordination of Intrusion Detection Systems and Physical Security Equipment					
Process operating permits					
Recycled/recovered materials report					
Coordination of IT and Communication Infrastructure and Devices (incl. CAT IV)					
Ribbon-cutting ceremony					

Table 3

NAVFAC Checklist Items	Point of Contact	Due Date	Actual Complete Date	CM Initials	Notes
Client walk-thru prior to pre-final inspections, if appropriate					
Schedule client satisfaction post BOD follow-up					
Schedule Government inspections of specialized equipment (e.g., Boiler/pressure vessels, elevators, UPS, SCIF shielding requirements, medical certifications, generators/switchgear)					
Provide keying plan to contractor					
Confirm utilities availability for final connections by contractor					
Startup utilities					
Mechanical Acceptance					
Load BOD into eContracts within 10 days of BOD					
Notify PM that BOD has occurred – PM to schedule FACQUAL					
Confirm completion of all LEED submittal requirements, required LEED credits and rating level.					
Resolve contract modifications & requests for equitable adjustment					
Contractor final release					
Return unobligated funds					
Process final payment					
Process recycled/recovered materials report					
Closeout actions on construction permits (e.g., NPDES)					
A-E and Construction Contractor Evaluations (ACASS/CCASS)					
Contractor QC Evaluation					
Complete Installed Property List and DD 1354					
Sign & provide Interim DD1354 to activity Real Property Accountability Officer NLT BOD					

DEPARTMENT OF THE NAVY

NAVFAC Far East
Yokosuka Japan

LIMITED AUTHORIZATION FOR USE OF HARDCOPY DATA

Contractor Information

Primary: Name (Print)	Signature	Phone #
Additional: Name (Print)	Signature	Phone #
Additional: Name (Print)	Signature	Phone #

(Hereinafter "Contractor") is authorized to use the attached electronic data for the sole and exclusive purpose of

_____

_____
(Insert use: e.g. assisting in the preparation of Contract related submittals for Contract No. 1234)

The Contractor shall not use the data for any other purpose, including any other commercial, business or for-profit activity. The Contractor shall not assign, loan, sell, copy or otherwise transfer the data to any other party without the Government's prior written consent. The Government makes no representation or warranty as to the suitability of the data for the Contractor's preparation of drawings and/or specifications as part of their contract submittal, including but not limited to, any expressed or implied warranty of merchantability or fitness for a particular purpose. The Contractor is under no obligation to use the data and assumes full and complete responsibility for their use. However, should they decide to use the data, the Contractor acknowledges and agrees to indemnify, defend and hold the Government and their consultants harmless from and against any and all claims arising out of the use of the data. The Contractor also agrees to submit back to the Government the data in relation to the above-referenced purpose for incorporation back into the Government database.

The Contractor's use of the attached data constitutes acknowledgment and agreement to the terms noted herein this limited authorization.

For Government Approval/Acknowledgment

Name (Print)	Signature	Phone #
Title	Date	

DEPARTMENT OF THE NAVY

NAVFAC Far East
Yokosuka Japan

LIMITED AUTHORIZATION FOR USE OF ELECTRONIC DATA

Contractor Information

Primary: Name (Print)	Signature	Phone #
Additional: Name (Print)	Signature	Phone #
Additional: Name (Print)	Signature	Phone #

(Hereinafter "Contractor") is authorized to use the attached electronic data for the sole and exclusive purpose of

_____

_____

(Insert use: e.g. assisting in the preparation of Contract related submittals for Contract No. 1234)

The Contractor shall not use the electronic data for any other purpose, including any other commercial, business or for-profit activity. The Contractor shall not assign, loan, sell, copy or otherwise transfer the electronic data to any other party without the Government's prior written consent. The Government makes no representation or warranty as to the suitability of the data for the Contractor's preparation of drawings and/or specifications as part of their contract submittal, including but not limited to, any expressed or implied warranty of merchantability or fitness for a particular purpose. The Contractor is under no obligation to use the electronic data and assumes full and complete responsibility for their use in preparing drawings and/or specifications for the above-referenced purpose. However, should they decide to use the electronic data, the Contractor acknowledges and agrees to indemnify, defend and hold the Government and their consultants harmless from and against any and all claims arising out of the use of the data. The Contractor also agrees to submit back to the Government the affected data where modified in relation to the above-referenced purpose for incorporation into the Government database.

The Contractor's use of the attached electronic data constitutes acknowledgment and agreement to the terms noted herein this limited authorization.

For Government Approval/Acknowledgment

Name (Print)	Signature	Phone #
Title	Date	

SECTION 01 32 16.00 33

CONSTRUCTION PROGRESS DOCUMENTATION

PART 1 GENERAL

1.1 SUBMITTALS

Government approval is required for submittals with a "G" designation; submittals not having a "G" designation are for Contractor Quality Control approval. The following shall be submitted in accordance with Section 01 33 00.00 33 SUBMITTAL PROCEDURES:

SD-01 Preconstruction Submittals

Construction schedule; G (FEAD)

1.2 ACCEPTANCE

Prior to the start of work, prepare and submit to the Contracting Officer for acceptance a construction schedule in the form of a Network Analysis Schedule (NAS) in accordance with the terms in Contract Clause "FAR 52.236-15, Schedules for Construction Contracts," except as modified in this contract. Acceptance of an error free Baseline Schedule and updates is a condition precedent to processing the Contractor's pay request.
The Government and the Contractor shall utilize Microsoft Projects 2003 for electronic submittal of all project schedules, unless specified otherwise by the Contracting Officer, throughout the duration of the Contract. Microsoft Projects is registered trademarks of Microsoft Corporation in the U.S.A.

1.3 SCHEDULE FORMAT

1.3.1 Network Analysis Schedule (NAS)

The Contractor shall use the critical path method (CPM) to schedule and control project activities. The scheduling software that will be utilized by the Government on this project is MS Projects 2003 by Microsoft, Inc. Notwithstanding any other provision in the contract, schedules submitted for this project must be prepared using MS Projects. Submission of data from another software system where data conversion techniques or software is used to import into MS Projects scheduling software is not acceptable and will be cause for rejection of the submitted schedule. The schedule shall be built as follows:

The Project Schedule shall show, submittals, government review periods, material/equipment delivery, utility outages, all on-site construction, inspection, testing, and closeout activities. Government and Contractor on-site work activities shall be driven by calendars that reflect Saturdays, Sundays and all Federal Holidays as non-work days.

With the exception of the Contract Award and End Contract milestone activities, no activities shall be open-ended; each activity shall have predecessor and successor ties.

Each activity shall be assigned its appropriate Responsibility Code indicating responsibility to accomplish the work indicated by the activity, Phase Code and Work Location Code.

Date/time constraint(s) and/or lags, other than those required by the contract, shall not be allowed unless accepted by the Contracting Officer. The Contractor shall include as the last activity in the contract schedule, a milestone activity named "Contract Completion Date". The "Contract Completion Date" milestone shall have a "Mandatory Finish" constraint equal to the contract completion date.

1.3.1.1 Cost Loading Activities

Material, labor and equipment costs will be assigned to their respective Construction Activities. Material and equipment costs for which payment will be requested in advance of installation will be assigned to their respective procurement activity (i.e., the material/equipment on-site activity). Evenly disperse overhead and profit to each activity over the duration of the project. Cost loading shall total to 100 percent of the value of the contract.

1.3.1.2 NAS Submittals and Procedures

a. Submit all network analysis and updates in hard copy and on electronic media as directed by the Contracting Officer. Submit an electronic back-up of the project schedule in an import format compatible with the governments scheduling program.

b. Submit an Earned Value Report with each schedule update showing activity budget, cost percent complete, earned amount and cost to complete as directed by the contracting officer.

c. With each schedule submission, provide a Schedule Variance Control (SVC) diagram showing

   (1) Cash Flow S-Curves indicating planned project cost based on projected early and late activity finish dates and
   (2) Earned value to-date. Revise Cash Flow S-Curves when the contract is modified, or as directed by the contracting Officer.

1.4 UPDATED SCHEDULES

Update the construction schedule at monthly intervals or when the schedule has been revised. The updated schedule shall be kept current, reflecting actual activity progress and plan for completing the remaining work. Submit copies of the purchase orders and confirmation of the delivery dates as directed.

1.5 3-WEEK LOOK AHEAD SCHEDULE

The Contractor shall prepare and issue a 3-Week Look Ahead schedule to provide a more detailed day-to-day plan of upcoming work identified on the Construction Schedule. The work plans shall be keyed to activity numbers when a NAS is required and updated each week to show the planned work for the current and following two-week period. Additionally, include upcoming outages, closures, preparatory meetings, and initial meetings. Identify critical path activities on the 3-Week Look Ahead Schedule. The detail work plans are to be bar chart type schedules, maintained separately from the Construction Schedule on an electronic spreadsheet program and printed on 8 ½ by 11 sheets as directed by the Contracting Officer. Activities shall not exceed 5 working

days in duration and have sufficient level of detail to assign crews, tools and equipment required to complete the work. Three hard copies and one electronic file of the 3-Week Look Ahead Schedule shall be delivered to the Contracting Officer no later than 10 a.m. each Monday and reviewed during the weekly CQC Coordination Meeting.

1.6 CORRESPONDENCE AND TEST REPORTS

All correspondence (e.g., letters, Requests for Information (RFIs), e-mails, meeting minute items, Production and QC Daily Reports, material delivery tickets, photographs, etc.) shall reference the Schedule Activity Number(s) that are being addressed. All test reports (e.g., concrete, soil compaction, weld, pressure, etc.) shall reference the Schedule Activity Number(s) that are being addressed.

PART 2 PRODUCTS

Not used.

PART 3 EXECUTION

Not used.

-- End of Section –

REQUEST FOR INFORMATION

		ACTIVITY ID	DATE
CONTRACT NO	CONTRACT TITLE		RFI NO
RFI SUBJECT		SPEC SECTION	DWG NO
RFI PRIORITY?	◯ HIGH ◯ NORMAL	SPEC PARAGRAPH	DWG DETAIL
POTENTIAL TIME/COST?	◯ YES ◯ NO		
SCHEDULE REFERENCED?	◯ YES ◯ NO	SPEC PAGE NO	DWG SHEET NO
CRITICAL PATH?	◯ YES ◯ NO		

CONTRACTOR QUESTION AND PROPOSED SOLUTION

RFI QUESTION/ISSUE:

CONTRACTOR PROPOSED SOLUTION:

CONTRACTOR/PROJECT MANAGER — DATE

ANSWERS AND COMMENTS

RFI ACTION

RFI REASON CODE

NOTE: If the determination of this RFI is "Answered - No Cost" then this reply is given with the expressed understanding that it does not constitute a basis for any change in the amount or time of subject contract. Information provided in this response does not authorize work not currently included in the contract. If determination of this RFI is "Answered - Pending PCO" then this response may require a change to the contract.

COMMENTS FOR DETAILED REVIEWER:

DETAILED REVIEWER 1 RECOMMENDED RFI SOLUTION:

DETAILED REVIEWER 1 NAME/SIGNATURE	TITLE	RESPONSE DATE

DETAILED REVIEWER 2 RECOMMENDED RFI SOLUTION:

DETAILED REVIEWER 2 NAME/SIGNATURE	TITLE	RESPONSE DATE

RFI RESPONSE:

GOVERNMENT CONSTRUCTION MANAGER — DATE

4296/2C (9/98)

SECTION 01 33 00.00 33

SUBMITTAL PROCEDURES

PART 1 GENERAL

1.1 DEFINITIONS

1.1.1 Submittal Description(SD)

Submittals requirements are specified in the technical sections. Submittals are identified by Submittal Description (SD) numbers and titles as follows:

SD-01 Preconstruction Submittals

Submittals which are required prior to commencing work on site. Schedules or tabular list of data or tabular list including location, features, or other pertinent information regarding products, materials, equipment, or components to be used in the work, submitted prior to contract notice to proceed.

Certificates of insurance
Surety bonds
List of proposed subcontractors
List of proposed products
Construction Progress Schedule
Network Analysis Schedule (NAS)
Submittal register
Cost loaded CPM schedule
Health and safety plan
Work plan
Quality control plan
Environmental protection plan

SD-02 Shop Drawings

Drawings, diagrams and schedules specifically prepared to illustrate some portion of the work.

Diagrams and instructions from a manufacturer or fabricator for use in producing the product and as aids to the Contractor for integrating the product or system into the project.

Drawings prepared by or for the Contractor to show how multiple systems and interdisciplinary work will be coordinated.

SD-03 Product Data

Catalog cuts, illustrations, schedules, diagrams, performance charts, instructions and brochures illustrating size, physical appearance and other characteristics of materials, systems or equipment for some portion of the work.

Samples of warranty language when the contract requires extended product warranties.

SD-04 Samples

Fabricated or un-fabricated physical examples of materials, equipment or workmanship that illustrate functional and aesthetic characteristics of a material or product and establish standards by which the work can be judged.

Color samples from the manufacturer's standard line (or custom color samples if specified) to be used in selecting or approving colors for the project.

Field samples and mock-ups constructed on the project site establish standards by which the ensuring work can be judged. Includes assemblies or portions of assemblies which are to be incorporated into the project and those which will be removed at conclusion of the work.

SD-05 Design Data

Design calculations, mix designs, analyses or other data pertaining to a part of work.

SD-06 Test Reports

Report signed by authorized official of testing laboratory that a material, product or system identical to the material, product or system to be provided has been tested in accord with specified requirements. (Testing must have been within three years of date of contract award for the project.)

Report which includes findings of a test required to be performed by the Contractor on an actual portion of the work or prototype prepared for the project before shipment to job site.

Report which includes finding of a test made at the job site or on sample taken from the job site, on portion of work during or after installation.

Investigation reports.
Daily logs and checklists.
Final acceptance test and operational test procedure.

SD-07 Certificates

Statements printed on the manufacturer's letterhead and signed by responsible officials of manufacturer of product, system or material attesting that product, system or material meets specification requirements. Must be dated after award of project contract and clearly name the project.

Document required of Contractor, or of a manufacturer, supplier, installer or subcontractor through Contractor, the purpose of which is to further quality of orderly progression of a portion of the work by documenting procedures, acceptability of methods or personnel qualifications.

Confined space entry permits.
Text of posted operating instructions.

SD-08 Manufacturer’s Instructions

Preprinted material describing installation of a product, system or material, including special notices and Material Safety Data sheets concerning impedances, hazards and safety precautions.

SD-09 Manufacturer’s Field Reports

Documentation of the testing and verification actions taken by manufacturer's representative at the job site, in the vicinity of the job site, or on a sample taken from the job site, on a portion of the work, during or after installation, to confirm compliance with manufacturer's standards or instructions. The documentation must be signed by an authorized official of a testing laboratory or agency and must state the test results; and indicate whether the material, product, or system has passed or failed the test.

Factory test reports.

SD-10 Operation and Maintenance Data

Data that is furnished by the manufacturer, or the system provider, to the equipment operating and maintenance personnel. This data is needed by operating and maintenance personnel for the safe and efficient operation, maintenance and repair of the item. This Data is intended to be incorporated in an operations and maintenance manual or control system.

SD-11 Closeout Submittals

Documentation to record compliance with technical or administrative requirements or to establish an administrative mechanism.

Special requirements necessary to properly close out a construction contract. For example, Record Drawings, manufacturer's help and product lines necessary to maintain and install equipment. Also, submittal requirements necessary to properly close out a major phase of construction on a multi-phase contract.

1.1.2 Approving Authority

Office or designated person authorized to approve submittal.

1.1.3 Work

As used in this section, on- and off-site construction required by contract documents, including labor necessary to produce submittals, construction, materials, products, equipment, and systems incorporated or to be incorporated in such construction.

1.2 SUBMITTALS

Government approval is required for submittals with a "G" designation; submittals not having a "G" designation are for information only or as otherwise designated. When used, a designation following the "G" designation identifies the office that will review the submittal for the Government.

The following shall be submitted in accordance with Section 01 33 00 SUBMITTAL PROCEDURES:

SD-01 Preconstruction Submittals

Submittal register; G (FEAD)

1.3 SUBMITTAL CLASSIFICATION

Submittals are classified as follows:

1.3.1 Government Approved

Government approval is required for extensions of design, critical materials, deviations, equipment whose compatibility with the entire system must be checked, and other items as designated by the Contracting Officer. Government approval is required for any deviations from the Solicitation or Accepted Proposal and other items as designated by the Contracting Officer. Within the terms of the Contract Clause entitled "Specifications and Drawings for Construction," they are considered to be "shop drawings."

1.3.2 Information Only

Submittals not requiring Government approval will be for information only. For Design-build construction all submittals not requiring Designer of Record or Government approval will be for information only. They are not considered to be "shop drawings" within the terms of the Contract Clause referred to above.

1.4 PREPARATION

1.4.1 Transmittal Form

Transmit each submittal, except sample installations and sample panels to office of FEAD. Transmit submittals with electronic transmittal form prescribed by Contracting Officer and standard for project. On the transmittal form identify Contractor, indicate date of submittal, and include information prescribed by transmittal form and required in paragraph entitled "Identifying Submittals." Process transmittal forms to record actions regarding samples. Transmit all electronic submittals less than 1MB by e-mail. All electronic submittals larger than 1MB shall be brought to the FEAD office on CD or DVD.

1.4.2 Identifying Submittals

When submittals are provided by a lower tier contractor the Prime Contractor is to prepare, review and stamp with Contractor's approval all specified submittals prior to submitting for Government approval.
Identify submittals, except sample installations and sample panels, with the following information permanently adhered to or noted on each separate component of each submittal and noted on transmittal form. Mark each copy of each submittal identically, with the following:

a. Project title and location.

b. Construction contract number.

c. Date of the drawings and revisions.

d. Name, address, and telephone number of subcontractor, supplier, manufacturer and any other second tier Contractor associated with submittal.

e. Section number of the specification section by which submittal is required.

f. Submittal description (SD) number of each component of submittal.

g. When a resubmission, add alphabetic suffix on submittal description, for example, submittal 18 would become 18A, to indicate resubmission.

h. Product identification and location in project.

1.4.3 Format for SD-02 Shop Drawings

a. Shop drawings are not to be less than 210 by 297 mm nor more than 1189 by 841 mm, except for full size patterns or templates. Prepare drawings to accurate size, with scale indicated, unless other form is required. Drawings are to be suitable for reproduction and be of a quality to produce clear, distinct lines and letters with dark lines on a white background.

b. Present A4 297 by 210 mm sized shop drawings as part of the bound volume for submittals required by section. Present larger drawings in sets.

c. Include on each drawing the drawing title, number, date, and revision numbers and dates, in addition to information required in paragraph entitled "Identifying Submittals."

d. Number drawings in a logical sequence. Contractors may use their own number system. Each drawing is to bear the number of the submittal in a uniform location adjacent to the title block. Place the Government contract number in the margin, immediately below the title block, for each drawing.

e. Reserve a blank space, no smaller than 25 millimeter on the right hand side of each sheet for the Government disposition stamp.

f. Dimension drawings, except diagrams and schematic drawings; prepare drawings demonstrating interface with other trades to scale. Use the same unit of measure for shop drawings as indicated on the contract drawings. Identify materials and products for work shown.

g. Include the nameplate data, size and capacity on drawings. Also include applicable federal, military, industry and technical society publication references.

1.4.4 Format of SD-03 Product Data and SD-08 Manufacturer's Instructions

a. Present product data submittals for each section as a complete, bound volume. Include table of contents, listing page and catalog item numbers for product data.

b. Indicate, by prominent notation, each product which is being submitted; indicate specification section number and paragraph number to which it pertains.

c. Supplement product data with material prepared for project to satisfy submittal requirements for which product data does not exist. Identify this material as developed specifically for project, with information and format as required for submission of SD-07 Certificates.

d. Provide product data in metric dimensions. Where product data are included in preprinted catalogs with English units only, submit metric dimensions on separate sheet.

e. Include the manufacturer's name, trade name, place of manufacture, and catalog model or number on product data. Also include applicable federal, military, industry and technical society publication references. Should manufacturer's data require supplemental information for clarification, submit as specified for SD-07 Certificates.

f. Where equipment or materials are specified to conform to industry and technical society reference standards of the organizations such as Japanese Industrial Standard (JIS), American National Standards Institute (ANSI), ASTM International (ASTM), National Electrical Manufacturer's Association (NEMA), Underwriters Laboratories (UL), and Association of Edison Illuminating Companies (AEIC), submit proof of such compliance. The label or listing by the specified organization will be acceptable evidence of compliance. In lieu of the label or listing, submit a certificate from an independent testing organization, competent to perform testing, and approved by the Contracting Officer. State on the certificate that the item has been tested in accordance with the specified organization's test methods and that the item complies with the specified organization's reference standard.

g. Collect required data submittals for each specific material, product, unit of work, or system into a single submittal and marked for choices, options, and portions applicable to the submittal. Mark each copy of the product data identically. Partial submittals will be accepted for expedition of construction effort.

h. Submit manufacturer's instructions prior to installation.

1.4.5 Format of SD-04 Samples

a. Furnish samples in sizes below, unless otherwise specified by each Task Order or unless the manufacturer has prepackaged samples of approximately same size as specified:

(1) Sample of Equipment or Device: Full size.

(2) Sample of Materials Less Than 50 by 75 mm: Built up to A4 297 by 210 mm.

(3) Sample of Materials Exceeding A4 297 by 210 mm: Cut down to A4 297 by 210 mm and adequate to indicate color, texture, and material variations.

(4) Sample of Linear Devices or Materials: 250 mm length or length to be supplied, if less than 250 mm. Examples of linear devices or materials are conduit and handrails.

(5) Sample of Non-Solid Materials: 750 ml. Examples of non-solid materials are sand and paint.

(6) Color Selection Samples: 50 by 100 mm. Where samples are specified for selection of color, finish, pattern, or texture, submit the full set of available choices for the material or product specified. Sizes and quantities of samples are to represent their respective standard unit.

(7) Sample Panel: 1200 by 1200 mm.

(8) Sample Installation: 10 square meters.

b. Samples Showing Range of Variation: Where variations in color, finish, pattern, or texture are unavoidable due to nature of the materials, submit sets of samples of not less than three units showing extremes and middle of range. Mark each unit to describe its relation to the range of the variation.

c. Reusable Samples: Incorporate returned samples into work only if so specified or indicated. Incorporated samples are to be in undamaged condition at time of use.

d. Recording of Sample Installation: Note and preserve the notation of area constituting sample installation but remove notation at final clean up of project.

e. When color, texture or pattern is specified by naming a particular manufacturer and style, include one sample of that manufacturer and style, for comparison.

1.4.6 Format of SD-05 Design Data and SD-07 Certificates

Provide design data and certificates on 297 by 210 mm paper. Provide a bound volume for submittals containing numerous pages.

1.4.7 Format of SD-06 Test Reports and SD-09 Manufacturer's Field Reports

a. Provide reports on 297 by 210 mm paper in a complete bound volume.

b. Indicate by prominent notation, each report in the submittal. Indicate specification number and paragraph number to which it pertains.

1.4.8 Format of SD-10 Operation and Maintenance Data (O&M)

Comply with the requirements specified in Section 01 78 23 OPERATION AND MAINTENANCE DATA for O&M Data format.

1.4.9 Format of SD-01 Preconstruction Submittals and SD-11 Closeout Submittals

a. When submittal includes a document which is to be used in project or become part of project record, other than as a submittal, do not apply

Contractor's approval stamp to document, but to a separate sheet accompanying document.

b. Provide all dimensions in administrative submittals in metric. Where data are included in preprinted material with English units only, submit metric dimensions on separate sheet.

1.5 QUANTITY OF SUBMITTALS

All submittals to the Government shall be in English or with English translation.

1.5.1 Number of Copies of SD-02 Shop Drawings

Submit one PDF copy of shop drawings requiring review and approval by the Government.

1.5.2 Number of Copies of SD-03 Product Data and SD-08 Manufacturer's Instructions

Submit in compliance with quantity requirements specified for shop drawings.

1.5.3 Number of Samples SD-04 Samples

a. Submit two samples, or two sets of samples showing range of variation, of each required item.

b. Submit one sample panel or provide one sample installation where directed. Include components listed in technical section or as directed.

c. Submit one sample installation, where directed.

d. Submit one sample of non-solid materials.

1.5.4 Number of Copies SD-05 Design Data and SD-07 Certificates

Submit in compliance with quantity requirements specified for shop drawings.

1.5.5 Number of Copies SD-06 Test Reports and SD-09 Manufacturer's Field Reports

Submit in compliance with quantity and quality requirements specified for shop drawings other than field test results that will be submitted with QC reports.

1.5.6 Number of Copies of SD-10 Operation and Maintenance Data

Submit three copies of O&M Data to the Contracting Officer for review and approval.

1.5.7 Number of Copies of SD-01 Preconstruction Submittals and SD-11 Closeout Submittals

Unless otherwise specified, submit two sets of administrative submittals.

1.6 VARIATIONS / SUBSTITUTION REQUESTS

Variations from contract requirements require Government approval pursuant to contract Clause FAR 52.236-21 and will be considered where advantageous to Government.

1.6.1 Considering Variations

Discussion with Contracting Officer prior to submission, will help ensure functional and quality requirements are met and minimize rejections and re-submittals. When contemplating a variation which results in lower cost, consider submission of the variation as a Value Engineering Change Proposal (VECP).
Specifically point out variations from contract requirements in transmittal letters. Failure to point out deviations may result in the Government requiring rejection and removal of such work at no additional cost to the Government.

1.6.2 Proposing Variations

When proposing variation, deliver written request to the Contracting Officer, with documentation of the nature and features of the variation and why the variation is desirable and beneficial to Government. If lower cost is a benefit, also include an estimate of the cost savings. In addition to documentation required for variation, include the submittals required for the item. Clearly mark the proposed variation in all documentation.

1.6.3 Warranting That Variations Are Compatible

When delivering a variation for approval, Contractor warrants that this contract has been reviewed to establish that the variation, if incorporated, will be compatible with other elements of work.

1.6.4 Review Schedule Is Modified

In addition to normal submittal review period, a period of 15 calendar days will be allowed for consideration by the Government of submittals with variations.

1.7 SUBMITTAL REGISTER

Prepare and maintain submittal register, as the work progresses. Do not change data which is output in columns (c), (d), (e), and (f) as delivered by Government; retain data which is output in columns (a), (g), (h), and (i) as approved. A submittal register showing items of equipment and materials for which submittals are required by the specifications is provided as an attachment. This list may not be all inclusive and additional submittals may be required. Maintain a submittal register for the project in accordance with Section 01 45 01.00 33 “QUALITY CONTROL” with the following fields completed, to the extent that will be required by the Government during subsequent usage.

Column (c): Lists specification section in which submittal is required.

Column (d): Lists each submittal description (SD No. and type, e.g. SD-02 Shop Drawings) required in each specification section.

Column (e): Lists one principal paragraph in specification section where a material or product is specified. This listing is only to facilitate

locating submitted requirements. Do not consider entries in column (e) as limiting project requirements.

Column (f): Indicate approving authority for each submittal. Approved offices, flowing “G”, are to be used as follow;

AD- FEAD
CS- FEAD Contract Specialist

1.7.1 Use of Submittal Register

Submit submittal register. Submit with QC plan and project schedule. Verify that all submittals required for project are listed and add missing submittals. Coordinate and complete the following fields on the register submitted with the QC plan and the project schedule:

Column (a) Activity Number: Activity number from the project schedule.

Column (g) Contractor Submit Date: Scheduled date for approving authority to receive submittals.

Column (h) Contractor Approval Date: Date Contractor needs approval of submittal.

Column (i) Contractor Material: Date that Contractor needs material delivered to Contractor control.

1.7.2 Contractor Use of Submittal Register

Update the following fields with each submittal throughout contract.

Column (b) Transmittal Number: Contractor assigned list of consecutive numbers.

Column (j) Action Code (k): Date of action used to record Contractor's review when forwarding submittals to QC.

Column (l) List date of submittal transmission.

Column (q) List date approval received.

1.7.3 Approving Authority Use of Submittal Register

Update the following fields.

Column (b) Transmittal Number: Contractor assigned list of consecutive numbers.

Column (l) List date of submittal receipt.

Column (m) through (p) List Date related to review actions.

Column (q) List date returned to Contractor.

1.7.4 Contractor Action Code and Action Code

Entries for columns (j) and (o), are to be used are as follows (others may be prescribed by Transmittal Form):

NR - Not Received
AN - Approved as noted
A – Approved
RA or F – Receipt, acknowledged
RR - Disapproved, Revise, and Resubmit

1.7.5 Copies Delivered to the Government

Deliver one copy of submittal register updated by Contractor to Government with each invoice request.

1.8 SCHEDULING

Schedule and submit concurrently submittals covering component items forming a system or items that are interrelated. Include certifications to be submitted with the pertinent drawings at the same time. No delay damages or time extensions will be allowed for time lost in late submittals. An additional 21 calendar days will be allowed and shown on the register for review and approval of submittals for fire protection systems, food service equipment, refrigeration and HVAC control systems and telecommunication systems.

a. Coordinate scheduling, sequencing, preparing and processing of submittals with performance of work so that work will not be delayed by submittal processing. Allow for potential resubmittal of requirements.

b. Submittals called for by the contract documents will be listed on the register. If a submittal is called for but does not pertain to the contract work, the Contractor is to include the submittal in the register and annotate it "N/A" with a brief explanation. Approval by the Contracting Officer does not relieve the Contractor of supplying submittals required by the contract documents but which have been omitted from the register or marked "N/A".

c. Re-submit register and annotate monthly by the Contractor with actual submission and approval dates. When all items on the register have been fully approved, no further re-submittal is required.

d. Carefully control procurement operations to ensure that each individual submittal is made on or before the Contractor scheduled submittal date shown on the approved "Submittal Register."

e. Except as specified otherwise, allow review period, beginning with receipt by approving authority, that includes at least 15 calendar days for submittals for QC Manager’s approval and 15 calendar days for submittals for Contracting Officer’s approval. Period of review for submittals with Contracting Officer’s approval begins when Government receives submittal from QC organization.

f. For submittals requiring review by environment office, allow review period, beginning when Government receives submittal from QC organization, of 14 calendar days for return of submittal to the Contractor.

g. For submittals requiring review by fire protection engineer, allow review period, beginning when Government receives submittal from QC organization, of 14 calendar days for return of submittal to the Contractor.

h. Period of review for each resubmittal is the same as for initial submittal.

Within 15 calendar days of notice to proceed, provide, for approval by the Contracting Officer, the following schedule of submittals:

a. A schedule of shop drawings and technical submittals required by the specifications and drawings. Indicate the specification or drawing reference requiring the submittal; the material, item, or process for which the submittal is required; the "SD" number and identifying title of the submittal; the Contractor's anticipated submission date and the approval need date.

b. A separate schedule of other submittals required under the contract but not listed in the specifications or drawings. Schedule will indicate the contract requirement reference; the type or title of the submittal; the Contractor's anticipated submission date and the approved need date (if approval is required).

1.8.1 Reviewing, Certifying, Approving Authority

The QC organization is responsible for reviewing and certifying that submittals are in compliance with contract requirements. Approving authority on submittals is QC Manager unless otherwise specified for specific submittal. At each "Submittal" paragraph in individual specification sections, a notation "G," following a submittal item, indicates Contracting Officer is approving authority for that submittal item.

1.8.2 Constraints

a. Conform to provisions of this section, unless explicitly stated otherwise for submittals listed or specified in this contract.

b. Submit complete submittals for each definable feature of work. Submit at the same time components of definable feature interrelated as a system.

c. When acceptability of a submittal is dependent on conditions, items, or materials included in separate subsequent submittals, submittal will be returned without review.

d. Approval of a separate material, product, or component does not imply approval of assembly in which item functions.

1.8.3 QC Organization Responsibilities

a. Note date on which submittal was received from Contractor on each submittal.

b. Review each submittal; and check and coordinate each submittal with requirements of work and contract documents.

c. Review submittals for conformance with project design concepts and compliance with contract documents.

d. Act on submittals, determining appropriate action based on QC organization's review of submittal.

(1) When QC Manager is approving authority, take appropriate action on submittal from the possible actions defined in paragraph entitled, "Actions Possible."

(2) When Contracting Officer is approving authority or when variation has been proposed, forward submittal to Government with certifying statement or return submittal marked "not reviewed" or "revise and resubmit" as appropriate. The QC organization's review of submittal determines appropriate action.

e. Ensure that material is clearly legible.

f. Stamp each sheet of each submittal with QC certifying statement or approving statement, except that data submitted in bound volume or on one sheet printed on two sides may be stamped on the front of the first sheet only.

(1) When approving authority is Contracting Officer, QC organization will certify submittals forwarded to Contracting Officer with the following certifying statement:

"I hereby certify that the (equipment) (material) (article) shown and marked in this submittal is that proposed to be incorporated with contract Number [_____], is in compliance with the contract drawings and specification, can be installed in the allocated spaces, and is submitted for Government approval.
Certified by Submittal Reviewer _____, Date _____
(Signature when applicable)
Certified by QC Manager _____, Date _____"
(Signature)

(2) When approving authority is QC Manager, QC Manager will use the following approval statement when returning submittals to Contractor as "Approved" or "Approved as Noted."

"I hereby certify that the (material) (equipment) (article) shown and marked in this submittal and proposed to be incorporated with contract Number [_____], is in compliance with the contract drawings and specification, can be installed in the allocated spaces, and is approved for use.
Certified by Submittal Reviewer _____, Date _____
(Signature when applicable)
Approved by QC Manager _____, Date _____"
(Signature)

g. Sign certifying statement or approval statement. The QC organization member designated in the approved QC plan is the person signing certifying statements. The use of original ink for signatures is required. Stamped signatures are not acceptable.

h. Update submittal register as submittal actions occur and maintain the submittal register at project site until final acceptance of all work by Contracting Officer.

i. Retain a copy of approved submittals at project site, including Contractor's copy of approved samples.

1.9 GOVERNMENT APPROVING AUTHORITY

When approving authority is Contracting Officer, the Government will:

a. Note date on which submittal was received from QC Manager.

b. Review submittals for approval within scheduling period specified and only for conformance with project design concepts and compliance with contract documents.

c. Identify returned submittals with one of the actions defined in paragraph entitled "Review Notations" and with markings appropriate for action indicated.

Upon completion of review of submittals requiring Government approval, stamp and date approved submittals. If the contract requires submittals in hard copy, three copies of the approved submittal will be retained by the Contracting Officer and four copies of the submittal will be returned to the Contractor.

1.9.1 Review Notations

Contracting Officer review will be completed within 15 calendar days after date of submission. Submittals will be returned to the Contractor with the following notations:

a. Submittals marked "approved" or "accepted" authorize the Contractor to proceed with the work covered.

b. Submittals marked "approved as noted" "or approved except as noted, resubmittal not required," authorize the Contractor to proceed with the work covered provided he takes no exception to the corrections.

c. Submittals marked "not approved" or "disapproved," or "revise and resubmit," indicate noncompliance with the contract requirements or design concept, or that submittal is incomplete. Resubmit with appropriate changes. No work shall proceed for this item until resubmittal is approved.

d. Submittals marked "not reviewed" will indicate submittal has been previously reviewed and approved, is not required, does not have evidence of being reviewed and approved by Contractor, or is not complete. A submittal marked "not reviewed" will be returned with an explanation of the reason it is not reviewed. Resubmit submittals returned for lack of review by Contractor or for being incomplete, with appropriate action, coordination, or change.

1.10 DISAPPROVED OR REJECTED SUBMITTALS

Contractor shall make corrections required by the Contracting Officer. If the Contractor considers any correction or notation on the returned submittals to constitute a change to the contract drawings or specifications; notice as required under the clause entitled, "Changes" is to be given to the Contracting Officer. Contractor is responsible for the dimensions and design of connection details and construction of work. Failure to point out deviations may result in the Government requiring rejection and removal of such work at the Contractor's expense. If changes are necessary to submittals, the Contractor shall make such revisions and submission of the submittals in accordance with the procedures above. No item of work requiring a submittal change is to be accomplished until the changed submittals are approved.

1.11 APPROVED/ACCEPTED SUBMITTALS

The Contracting Officer's approval or acceptance of submittals is not be construed as a complete check, and indicates only that the general method of construction, materials, detailing and other information are satisfactory design, general method of construction, materials, detailing and other information appear to meet the Solicitation and Accepted Proposal. Approval or acceptance will not relieve the Contractor of the responsibility for any error which may exist, as the Contractor under the Contractor Quality Control (CQC) requirements of this contract is responsible for dimensions, the design of adequate connections and details, and the satisfactory construction of all work. After submittals have been approved or accepted by the Contracting Officer, no resubmittal for the purpose of substituting materials or equipment will be considered unless accompanied by an explanation of why a substitution is necessary.

1.12 APPROVED SAMPLES

Approval of a sample is only for the characteristics or use named in such approval and is not be construed to change or modify any contract requirements. Before submitting samples, the Contractor to assure that the materials or equipment will be available in quantities required in the project. No change or substitution will be permitted after a sample has been approved. Match the approved samples for Materials and equipment incorporated in the work. If requested, approved samples, including those which may be damaged in testing, will be returned to the Contractor, at his expense, upon completion of the contract. Samples not approved will also be returned to the Contractor at its expense, if so requested.
Failure of any materials to pass the specified tests will be sufficient cause for refusal to consider, under this contract, any further samples of the same brand or make of that material. Government reserves the right to disapproved any material or equipment which previously has proved unsatisfactory in service.
Samples of various materials or equipment delivered on the site or in place may be taken by the Contracting Officer for testing. Samples failing to meet contract requirements will automatically void previous approvals. Contractor to replace such materials or equipment to meet contract requirements.
Approval of the Contractor's samples by the Contracting Officer does not relieve the Contractor of his responsibilities under the contract.

1.13 WITHHOLDING OF PAYMENT

Payment for materials incorporated in the work will not be made if required approvals have not been obtained. No payment for materials incorporated in the work will be made if all required Government approvals have not been obtained. No payment will be made for any materials incorporated into the work for any conformance review submittals or information only submittals found to contain errors or deviations from the Solicitation or Accepted Proposal.

PART 2 PRODUCTS

Not Used

PART 3 EXECUTION

Not Used

-- End of Section --

SUBMITTAL TRANSMITTAL

ACTIVITY ID | DATE

CONTRACT NO | CONTRACT TITLE | SUBMI NO

SUBM ITEM DESCRIPTION

SUBMITTAL PRIORITY? ( ) HIGH ( ) NORMAL
PREPARED BY CQC MGR? ( ) YES ( ) NO
SCHEDULE REFERENCED? ( ) YES ( ) NO
CRITICAL PATH? ( ) YES ( ) NO

SPEC SECTION | SPEC PARAGRAPH | SPEC PAGE NO

CQC REMARKS:

CONTRACTOR/QUALITY CONTROL MANAGER | DATE

APPROVAL AND COMMENTS

COMMENTS FOR DETAILED REVIEWER:

DETAILED REVIEWER 1 COMMENTS:

DETAILED REVIEWER 1 NAME/SIGNATURE | TITLE | RESPONSE DATE

DETAILED REVIEWER 2 COMMENTS:

DETAILED REVIEWER 2 NAME/SIGNATURE | TITLE | RESPONSE DATE

APPROVER'S COMMENTS:

SUBM STATUS

GOVERNMENT CONSTRUCTION MANAGER | DATE

4296/2C (9/98)

Transmittal/Review/Approval

DATE

CONTRACT NO	TITLE Fill in Project Title/Location Here		
FROM (CONTRACTOR)	TO	SUBMITTAL NO.	FOR SPEC. SECTION

Add Del

ENCL. NO.	NO. OF COPIES	DESCRIPTION	SPEC. SEC.PARA./DWG.NO.	SCHEDULE ACTIVITY NO.	CQC CODE

DATE NEEDED BY:

TRANSMITTED FOR: ☐ APPROVAL ☐ CLARIFICATION ☐ SELECTION ☐ RECORD ☐ VARIANCE

It is hereby certified that the material submitted herein conforms to contract requirements and can be installed in the allocated spaces. CONTRACTOR'S SIGNATURE

FROM SIGNATURE: DATE:

TO: *For review/comment ( ) copies of enclosures forwarded. RETURN WITHIN ( ) WORKING DAYS, unless submittal is for record/info purposes only and there are no adverse comments.*

FROM: TO DATE:

RECOMMEND:

☐ APPROVAL/ACCEPTANCE, subject to contract requirements
☐ APPROVAL/ACCEPTANCE, as noted, subject to contract requirements
☐ RETURN for correction and resubmission
☐ DISAPPROVAL
☐ REVIEWED AND PROCEED
☐

REMARKS:

SIGNATURE:

☐ copies of encls retained

FROM: TO (CONTRACTOR) DATE:

Enclosure(s) is (are):

☐ APPROVED/ACCEPTED, subject to contract requirements
☐ APPROVED/ACCEPTED, as noted, subject to contract requirements
☐ RETURNED for correction and resubmission
☐ DISAPPROVED
☐ NOT REVIEWED
☐ RECEIVED FOR RECORD

REMARKS:

SIGNATURE

☐ copies of encls returned

BY DIRECTION OF THE CONTRACTING OFFICER

Copy to: Contract File (w/encls)
ConRep/ET (w/encls)
CME (w/encls)

SUBMITTAL REGISTER

CONTRACT NO.
eProject# 1358486

TITLE AND LOCATION
IDIQ Exterior Painting Contract for Various Areas

CONTRACTOR

ACTIVITY NO	TRANSMITTAL NO	SPEC SECTION	SD NUMBER	PARAGRAPH NUMBER AND DISCRIPTION	GOVT QC OR REVIEWER CLASSIFICATION	CONTRACTOR: SCHEDULE DATE			CONTRACTOR ACTION			APPROVING AUTHORITY					
						SUBMIT	APPROVAL NEEDED BY	MATERIAL NEEDED BY	ACTION CODE	DATE OF ACTION	DATE FWD TO APPR AUTH/ DATE RCD FRM APPR AUTH	DATE FWD TO OTHER REVIEWER	DATE RCD FRM OTHER REVIEWER	ACTION CODE	DATE OF ACTION	MAILED TO CONTR/ DATE RCD FRM APPR AUTH	REMARKS
(a)	(b)	(c)	(d)	(e)	(f)	(g)	(h)	(i)	(j)	(k)	(l)	(m)	(n)	(o)	(p)	(q)	(r)
		Contract Clauses	SD-01	Bonds	G (CS)												
		01 11 00.00 33	SD-01	Utility outage requests	G (AD)												
			SD-01	Hot work Permits	G (AD)												
		01 14 00.00 33	SD-01	List of Contact Personnel	G (AD)												
			SD-01	Vehicle list	G (AD)												
			SD-01	Employee List for High Restricted area	G (AD)												
		01 20 00.00 33	SD-01	Cost Loaded CPM	G (AD)												
		01 30 00.00 33	SD-01	Certificate of Insurance	G (AD)												
			SD-01	Progress and completion pictures	G (AD)												
			SD-01	View location map	G (AD)												
			SD-01	Limited Authorization for Use of Hardcopy Data and Electronic Data	G (AD)												
		01 32 16.00 33	SD-01	Construction schedule	G (AD)												
		01 33 00.00 33	SD-01	Submittal register	G (AD)												
		01 35 26.00 33	SD-01	Accident Prevention Plan (APP)	G (AD)												
			SD-01	Activity Hazard Analysis (AHA)	G (AD)												
			SD-01	Crane critical lift plan	G (AD)												
			SD-01	Proof of qualification for crane operators	G (AD)												

NOTE: AD=FEAD, CS= FEAD Contract Specialist, CI=NAVFACFE OP3C1, FE=Far East Fire Protection Engineer, EV =NAVFACFE Environment Office, Blank=Contractor QC Manager

SUBMITTAL REGISTER

CONTRACT NO.
eProject# 1358486

TITLE AND LOCATION
IDIQ Exterior Painting Contract for Various Areas

CONTRACTOR

ACTIVITY NO	TRANSMITTAL NO	SPEC SECTION	SD NUMBER	PARAGRAPH NUMBER AND DISCRIPTION	GOVT QC OR QC REVIEWER CLASSIFICATION	CONTRACTOR: SCHEDULE DATE			CONTRACTOR ACTION			APPROVING AUTHORITY					
						SUBMIT	APPROVAL NEEDED BY	MATERIAL NEEDED BY	ACTION CODE	DATE OF ACTION	DATE FWD TO APPR AUTH/ DATE RCD FRM APPR AUTH	DATE FWD TO OTHER REVIEWER	DATE RCD FRM OTHER REVIEWER	ACTION CODE	DATE OF ACTION	MAILED TO CONTR/ DATE RCD FRM APPR AUTH	REMARKS
(a)	(b)	(c)	(d)	(e)	(f)	(g)	(h)	(i)	(j)	(k)	(l)	(m)	(n)	(o)	(p)	(q)	(r)
			SD-01	Temporary wiring and lighting sketch	G (AD)												
			SD-01	Fall Protection and Prevention (FP&P) Plan	G (AD)												
			SD-01	Scaffolding plan	G (AD)												
			SD-01	Energized Electrical Work Permit	G (AD)												
			SD-01	Credentials of the Competent Person(s)	G (AD)												
			SD-06	Accident reports	G (AD)												
			SD-06	Monthly exposure reports	G (AD)												
			SD-06	Crane reports	G (AD)												
			SD-07	Hot work permit	G (AD)												
			SD-07	Contractor safety self-evaluation checklist	G (AD)												
			SD-07	Certificate of compliance (Crane)	G (AD)												
		01 45 00.00 33	SD-01	Construction quality control (QC) plan	G (AD)												
		01 50 00.00 33	SD-01	Traffic control plan	G (AD)												
			SD-01	Fence plan	G (AD)												
		01 57 19.00 33	SD-01	Pre-construction survey	G (AD)												
			SD-01	Solid waste management plan and permit	G (AD)												
			SD-01	Transportation and disposal permits/license for hazardous waste	G (AD)												
			SD-01	Environmental management plan	G (AD)												

NOTE: AD=FEAD, CS= FEAD Contract Specialist, CI=NAVFACFE OP3C1, FE=Far East Fire Protection Engineer, EV =NAVFACFE Environment Office, Blank=Contractor QC Manager

SUBMITTAL REGISTER

CONTRACT NO.
eProject# 1358486

TITLE AND LOCATION
IDIQ Exterior Painting Contract for Various Areas

CONTRACTOR

ACTIVITY NO	TRANSMITTAL NO	SPEC SECTION	SD NUMBER	PARAGRAPH NUMBER AND DISCRIPTION	GOVT QC REVIEWER CLASSIFICATION	CONTRACTOR: SCHEDULE DATE			CONTRACTOR ACTION			APPROVING AUTHORITY					REMARKS
						SUBMIT	APPROVAL NEEDED BY	MATERIAL NEEDED BY	ACTION CODE	DATE OF ACTION	DATE FWD TO APPR AUTH/ DATE RCD FRM APPR AUTH	DATE FWD TO OTHER REVIEWER	DATE RCD FRM OTHER REVIEWER	ACTION CODE	DATE OF ACTION	MAILED TO CONTR/ DATE RCD FRM APPR AUTH	
(a)	(b)	(c)	(d)	(e)	(f)	(g)	(h)	(i)	(j)	(k)	(l)	(m)	(n)	(o)	(p)	(q)	(r)
			SD-01	Contactor hazardous material inventory log	G (AD)												
			SD-06	Laboratory Analysis	G (AD)												
			SD-11	Disposal documentation for hazardous and regulated waste	G (AD)												
			SD-11	Waste determination documentation	G (AD)												
			SD-11	Bill of lading for regulated solid waste	G (AD)												
			SD-11	Contractor hazardous material inventor log	G (AD)												
		01 58 00.00 33	SD-02	Preliminary drawing indication layout and text content	G (AD)												
		01 74 19.00 33	SD-01	Waste management plan	G (AD)												
			SD-11	Records with manifests	G (AD)												
		01 78 00.00 33	SD-03	As-Built Record of Equipment and Materials	G (AD)												
			SD-03	Warranty Management Plan	G (AD)												
			SD-03	Warranty Tags	G (AD)												
			SD-03	Final Cleaning	G (AD)												
			SD-03	Spare Parts Data	G (AD)												
			SD-08	Preventative Maintenance	G (AD)												
			SD-08	Condition Monitoring (Predictive Testing)	G (AD)												
			SD-08	Inspection	G (AD)												
			SD-08	Posted Instructions	G (AD)												
			SD-10	Operation and Maintenance Manuals	G (AD)												
			SD-11	Record Drawings	G (AD)												

NOTE: AD=FEAD, CS= FEAD Contract Specialist, CI=NAVFACFE OP3C1, FE=Far East Fire Protection Engineer, EV =NAVFACFE Environment Office, Blank=Contractor QC Manager

SUBMITTAL REGISTER

CONTRACT NO.
eProject# 1358486

TITLE AND LOCATION
IDIQ Exterior Painting Contract for Various Areas

CONTRACTOR

ACTIVITY NO	TRANSMITTAL NO	SPEC SECTION	SD NUMBER	PARAGRAPH NUMBER AND DISCRIPTION	GOVT OR CQC REVIEWER CLASSIFICATION	CONTRACTOR: SCHEDULE DATE			CONTRACTOR ACTION			APPROVING AUTHORITY					REMARKS
						SUBMIT	APPROVAL NEEDED BY	MATERIAL NEEDED BY	ACTION CODE	DATE OF ACTION	DATE FWD TO APPR AUTH/ DATE RCD FRM APPR AUTH	DATE FWD TO OTHER REVIEWER	DATE RCD FRM OTHER REVIEWER	ACTION CODE	DATE OF ACTION	MAILED TO CONTR/ DATE RCD FRM APPR AUTH	
(a)	(b)	(c)	(d)	(e)	(f)	(g)	(h)	(i)	(j)	(k)	(l)	(m)	(n)	(o)	(p)	(q)	(r)
			SD-11	Certification of lead free, asbestos free and PCB free materials	G (AD)												
		02 41 00.00 33	SD-01	Demolition plan	G (AD)												
			SD-01	Existing conditions	G (AD)												
			SD-07	Disposal manifest for solid waste	G (AD)												
			SD-07	Register, fluorocarbon -refrigerant-gas/halon-gas handling technician	G (AD)												
		02 82 16.00 33	SD-01	Asbestos hazard abatement plan	G (AD)												
			SD-03	Local exhaust equipment	G (AD)												
			SD-03	Vacuum with HEPA filter	G (AD)												
			SD-03	Protective clothing	G (AD)												
			SD-03	Filters for vacuum cleaner and waste water	G (AD)												
			SD-03	Respirator	G (AD)												
			SD-03	Pressure differential automatic recording instrument	G (AD)												
			SD-03	Amended water	G (AD)												
			SD-03	Glovebags	G (AD)												
			SD-03	Negative air machine and manometer	G (AD)												
			SD-03	Material Safety Data Sheets (MSDS) for all materials proposed for transport to the project site	G (AD)												
			SD-03	Encapsulants	G (AD)												
			SD-06	Air sampling results	G (AD)												
			SD-06	Pressure differential recordings for local exhaust system	G (AD)												
			SD-06	Asbestos disposal quantity report	G (AD)												

NOTE: AD=FEAD, CS= FEAD Contract Specialist, CI=NAVFACFE OP3C1, FE=Far East Fire Protection Engineer, EV =NAVFACFE Environment Office, Blank=Contractor QC Manager

SUBMITTAL REGISTER

CONTRACT NO.
eProject# 1358486

TITLE AND LOCATION
IDIQ Exterior Painting Contract for Various Areas

CONTRACTOR

ACTIVITY NO	TRANSMITTAL NO	SPEC SECTION	SD NUMBER	PARAGRAPH NUMBER AND DISCRIPTION	GOVT REVIEWER CLASSIFICATION OR CQC	CONTRACTOR: SCHEDULE DATE			CONTRACTOR ACTION			APPROVING AUTHORITY				MAILED TO CONTR/ DATE RCD FRM APPR AUTH	REMARKS
						SUBMIT	APPROVAL NEEDED BY	MATERIAL NEEDED BY	ACTION CODE	DATE OF ACTION	DATE FWD TO APPR AUTH/ DATE RCD FRM APPR AUTH	DATE FWD TO OTHER REVIEWER	DATE RCD FRM OTHER REVIEWER	ACTION CODE	DATE OF ACTION		
(a)	(b)	(c)	(d)	(e)	(f)	(g)	(h)	(i)	(j)	(k)	(l)	(m)	(n)	(o)	(p)	(g)	(r)
			SD-06	Encapsulation test patches	G (AD)												
			SD-06	Clearance sampling	G (AD)												
			SD-07	Testing laboratory	G (AD)												
			SD-07	Private qualified person documentation, including delegation letter	G (AD)												
			SD-07	Contractor's license	G (AD)												
			SD-07	Competent person documentation	G (AD)												
			SD-07	Worker's license	G (AD)												
			SD-07	Landfill approval	G (AD)												
			SD-07	Employee training	G (AD)												
			SD-07	Medical certification requirements	G (AD)												
			SD-07	Completed and signed hazardous waste manifest from treatment or disposal facility	G (AD)												
			SD-07	Respiratory protection program	G (AD)												
			SD-07	Vacuum	G (AD)												
			SD-07	Water filtration equipment	G (AD)												
			SD-07	Ventilation systems	G (AD)												
			SD-07	Other equipment used to contain airborne asbestos fibers	G (AD)												
			SD-07	Chemical encapsulation sealers	G (AD)												
			SD-11	Notifications	G (AD)												
			SD-11	Rental equipment	G (AD)												
			SD-11	Respirator program records	G (AD)												
			SD-11	Permits and licenses	G (AD)												
			SD-11	Protective clothing decontamination quality control records	G (AD)												

NOTE: AD=FEAD, CS= FEAD Contract Specialist, CI=NAVFACFE OP3C1, FE=Far East Fire Protection Engineer, EV =NAVFACFE Environment Office, Blank=Contractor QC Manager

SUBMITTAL REGISTER

CONTRACT NO.
eProject# 1358486

TITLE AND LOCATION
IDIQ Exterior Painting Contract for Various Areas

CONTRACTOR

ACTIVITY NO	TRANSMITTAL NO	SPEC SECTION	SD NUMBER	PARAGRAPH NUMBER AND DISCRIPTION	GOVT QC OR REVIEWER CLASSIFICATION	CONTRACTOR: SCHEDULE DATE			CONTRACTOR ACTION			APPROVING AUTHORITY					REMARKS
						SUBMIT	APPROVAL NEEDED BY	MATERIAL NEEDED BY	ACTION CODE	DATE OF ACTION	DATE FWD TO APPR AUTH/ DATE RCD FRM APPR AUTH	DATE FWD TO OTHER REVIEWER	DATE RCD FRM OTHER REVIEWER	ACTION CODE	DATE OF ACTION	MAILED TO CONTR/ DATE RCD FRM APPR AUTH	
(a)	(b)	(c)	(d)	(e)	(f)	(g)	(h)	(i)	(j)	(k)	(l)	(m)	(n)	(o)	(p)	(q)	(r)
			SD-11	Protective clothing decontamination facility notification	G (AD)												
			SD-11	ACM (asbestos containing materials) replacement record	G (AD)												
		02 83 13.00 33	SD-01	Lead Compliance Plan including CP approval (signature, date, and certification number)	G (AD)												
			SD-01	Competent Person qualifications	G (AD)												
			SD-01	Training certification of workers and supervisors	G (AD)												
			SD-01	Lead waste management plan	G (AD)												
			SD-01	Material safety data sheets for all chemicals	G (AD)												
			SD-01	Written evidence that Treatment, storage or disposal (TSD) facility is approved for lead disposal	G (AD)												
			SD-01	Certification of medical examinations	G (AD)												
			SD-03	Vacuum filters	G (AD)												
			SD-03	Respirators	G (AD)												
			SD-03	Material for chemical removal method	G (AD)												
			SD-06	Sampling results	G (AD)												
			SD-06	Occupational and environmental assessment data report	G (AD)												
			SD-07	Testing Laboratory qualifications	G (AD)												
			SD-07	Occupant notification	G (AD)												
			SD-07	Third party consultant qualifications	G (AD)												

NOTE: AD=FEAD, CS= FEAD Contract Specialist, CI=NAVFACFE OP3C1, FE=Far East Fire Protection Engineer, EV =NAVFACFE Environment Office, Blank=Contractor QC Manager

SUBMITTAL REGISTER

CONTRACT NO.
eProject# 1358486

TITLE AND LOCATION
IDIQ Exterior Painting Contract for Various Areas

CONTRACTOR

ACTIVITY NO	TRANSMITTAL NO	SPEC SECTION	SD NUMBER	PARAGRAPH NUMBER AND DISCRIPTION	GOVT QC OR QC REVIEWER CLASSIFICATION	CONTRACTOR: SCHEDULE DATE			CONTRACTOR ACTION			APPROVING AUTHORITY				MAILED TO CONTR/ DATE RCD FRM APPR AUTH	REMARKS
						SUBMIT	APPROVAL NEEDED BY	MATERIAL NEEDED BY	ACTION CODE	DATE OF ACTION	DATE FWD TO APPR AUTH/ DATE RCD FRM APPR AUTH	DATE FWD TO OTHER REVIEWER	DATE RCD FRM OTHER REVIEWER	ACTION CODE	DATE OF ACTION		
(a)	(b)	(c)	(d)	(e)	(f)	(g)	(h)	(i)	(j)	(k)	(l)	(m)	(n)	(o)	(p)	(q)	(r)
			SD-07	Clearance certification	G (AD)												
			SD-07	Employee training certification	G (AD)												
			SD-08	Chemical removal method	G (AD)												
			SD-11	Completed and signed hazardous waste manifest from treatment or disposal facility	G (AD)												
		02 83 19.00 33	SD-03	Materials and Equipment	G (AD)												
			SD-03	Expendable Supplies	G (AD)												
			SD-03	Qualifications	G (AD)												
			SD-03	Occupant Protection Plan	G (AD)												
			SD-06	Pressure Differential Log	G (AD)												
			SD-06	Licenses, Permits, and Notifications	G (AD)												
			SD-06	Sampling and Analysis	G (AD)												
			SD-06	Abatement Report	G (AD)												
		07 14 00.00 33	SD-02	Installation details of Waterproofing	G (AD)												
			SD-03	Waterproofing system	G (AD)												
			SD-11	Warranty	G (AD)												
		07 41 13.00 33	SD-02	Roof panel installation details	G (AD)												
			SD-03	Roof panel	G (AD)												
			SD-11	Warranties	G (AD)												
		07 42 13.00 33	SD-02	Wall panel installation details	G (AD)												
			SD-03	Wall panel	G (AD)												
			SD-11	Warranties	G (AD)												
		07 60 00.00 33	SD-02	Installation details of Gutter and Downspout	G (AD)												

NOTE: AD=FEAD, CS= FEAD Contract Specialist, CI=NAVFACFE OP3C1, FE=Far East Fire Protection Engineer, EV =NAVFACFE Environment Office, Blank=Contractor QC Manager

SUBMITTAL REGISTER

CONTRACT NO.
eProject# 1358486

TITLE AND LOCATION
IDIQ Exterior Painting Contract for Various Areas

CONTRACTOR

ACTIVITY NO	TRANSMITTAL NO	SPEC SECTION	SD NUMBER	PARAGRAPH NUMBER AND DISCRIPTION	GOVT CQC REVIEWER CLASSIFICATION	CONTRACTOR: SCHEDULE DATE			CONTRACTOR ACTION			APPROVING AUTHORITY					REMARKS
						SUBMIT	APPROVAL NEEDED BY	MATERIAL NEEDED BY	ACTION CODE	DATE OF ACTION	DATE FWD TO APPR AUTH/ DATE RCD FRM APPR AUTH	DATE FWD TO OTHER REVIEWER	DATE RCD FRM OTHER REVIEWER	ACTION CODE	DATE OF ACTION	MAILED TO CONTR/ DATE RCD FRM APPR AUTH	
(a)	(b)	(c)	(d)	(e)	(f)	(g)	(h)	(i)	(j)	(k)	(l)	(m)	(n)	(o)	(p)	(q)	(r)
			SD-03	Product's name to be submitted	G (AD)												
		07 92 00.00 33	SD-03	Product's name to be submitted	G (AD)												
		08 81 00.00 33	SD-02	Installation detail of Glass pane in door or window	G (AD)												
			SD-03	Product's name to be submitted	G (AD)												
		09 24 23.00 33	SD-02	Installation details of repair spalling	G (AD)												
			SD-03	Product's name to be submitted	G (AD)												
		09 90 00.00 33	SD-03	Paint materials	G (AD)												
			SD-07	Applicator's qualifications	G (AD)												
			SD-08	Manufacturer's material safety data sheets (MSDS)	G (AD)												

NOTE: AD=FEAD, CS= FEAD Contract Specialist, CI=NAVFACFE OP3C1, FE=Far East Fire Protection Engineer, EV =NAVFACFE Environment Office, Blank=Contractor QC Manager

SECTION 01 35 26.00 33

GOVERNMENTAL SAFETY REQUIREMENTS

PART 1 GENERAL

1.1 REFERENCES

The publications listed below form a part of this specification to the extent referenced. The publications are referred to within the text by the basic designation only. The latest version of the publication at time of award shall be used.

AMERICAN SOCIETY OF SANITARY ENGINEERING (ASSE/SAFE)

ASSE/SAFE A10.32	Personal Fall Protection – Safety Requirements for Construction and Demolition Operations
ASSE/SAFE A10.34	Protection of the Public on or Adjacent to Construction Sites
ASSE/SAFE Z359.1	Safety Requirements for Personal Fall Arrest Systems, Subsystems and Components
ASSE/ISEA 107	Standard for High Visibility Safety Apparel

AMERICAN SOCIETY OF MECHANICAL ENGINEERS INTERNATIONAL (ASME), or equivalent host nation standards

ASME B30.22	Articulating Boom Cranes
ASME B30.3	Construction Tower Cranes
ASME B30.5	Mobile and Locomotive Cranes
ASME B30.8	Floating Cranes and Floating Derricks

NATIONAL FIRE PROTECTION ASSOCIATION (NFPA)

NFPA 10	Portable Fire Extinguishers
NFPA 241	Safeguarding Construction, Alteration, and Demolition Operations
NFPA 306	Standard for Control of Gas Hazards on Vessels
NFPA 51B	Fire Prevention During Welding, Cutting, and Other Hot Work
NFPA 70	National Electrical Code
NFPA 70E	Standard for Electrical Safety in the Workplace

NFPA 101	Life Safety Code
NFPA 13	Installation of Automatic Sprinkler Systems
NFPA 72	National Fire Alarm and Signaling Code

U.S. ARMY CORPS OF ENGINEERS (USACE)

EM 385-1-1	(2014) Safety and Health Requirements Manual

U.S. NATIONAL ARCHIVES AND RECORDS ADMINISTRATION (NARA)

29 CFR 1910	Occupational Safety and Health Standards
29 CFR 1910.146	Permit-required Confined Spaces
29 CFR 1915	Confined and Enclosed Spaces and Other Dangerous Atmospheres in Shipyard Employment
29 CFR 1919	Gear Certification
29 CFR 1926	Safety and Health Regulations for Construction
29 CFR 1926.500	Fall Protection
29 CFR 1926.550	Cranes, Derricks, Hoists, Elevators and Conveyors

LAW OF THE JAPANESE GOVERNMENT

No. 57	Industrial Safety and Health Law

NAVFAC INSTRUCTION

P-307	Management of weight handling equipment

NAVFAC FAR EAST INSTRUCTION

NAVFACFEINS 11260.1G OR MOST CURRENT VERSION	Weight Handling Equipment (WHE) Program Manual

CHIEF OF PORTS AND HARBORS BUREAU OF MINISTRY OF LAND, INFRASTRUCTURE, TRANSPORT AND TOURISM

Circular Notice Ser 249	2007 "Kowan Koji Tou Sensui Sagyo-jyujisya Haichi Yoryo"

1.2 SUBMITTALS

Government approval is required for submittals with a "G" designation; submittals not having a "G" designation are for Contractor Quality Control approval and are submitted for information only. The following shall be submitted in accordance with Section 01 33 00.00 33 SUBMITTAL PROCEDURES:

SD-01 Preconstruction Submittals

Accident Prevention Plan (APP); G (FEAD)

Activity Hazard Analysis (AHA); G (FEAD)

Crane Critical Lift Plan; G (FEAD)

Proof of qualification for Crane Operators; G (FEAD)

Temporary Wiring and Lighting sketch; G (FEAD)

Fall Protection and Prevention (FP&P) Plan; G (FEAD)

Scaffolding plan; G (FEAD)

Energized Electrical Work Permit; G (FEAD)

Credentials of the Competent Person(s); G (FEAD)

SD-06 Test Reports

Submit reports as their incidence occurs, in accordance with the requirements of the paragraph entitled, "Reports."

Accident Reports; G (FEAD)

Monthly Exposure Reports; G (FEAD)

Crane Reports; G (FEAD)

SD-07 Certificates

Hot work permit; G (FEAD)

Contractor safety self-evaluation checklist; G (FEAD)

Certificate of compliance (Crane); G (FEAD)

Submit one copy of each permit/certificate attached to each Daily Quality Control Report.

1.3 DEFINITIONS

a. Competent Person for Fall Protection. A person who is capable of identifying hazardous or dangerous conditions in the personal fall arrest system or any component thereof, as well as their application and use with related equipment, and has the authority to take prompt corrective measures to eliminate the hazards of falling.

b. Crane. Contractor operated crane includes cranes, multi-purpose machines, material handling equipment (Forklifts), and Construction Equipment when used as cranes to lift suspended loads and rigging equipment in weight handling operations.

c. High Visibility Accident. Any mishap which may generate publicity and/or high visibility.

d. Medical Treatment. Treatment administered by a physician or by registered professional personnel under the standing orders of a physician. Medical treatment does not include first aid treatment even through provided by a physician or registered personnel.

e. Operating Envelope. The area surrounding any crane. Inside this "envelope" is the crane, the operator, riggers and crane walkers, rigging gear between the hook and the load, the load and the crane's supporting structure (ground, rail, etc.).

f. Qualified Person for Fall Protection. A person with a recognized degree or professional certificate, and with extensive knowledge, training and experience in the field of fall protection; who is capable of performing design, analysis, and evaluation of fall protection systems and equipment.

g. Recordable Injuries or Illnesses. Any work-related injury or illness that results in:

(1) Death, regardless of the time between the injury and death, or the length of the illness;

(2) Days away from work (any time lost after day of injury/illness onset);

(3) Restricted work;

(4) Transfer to another job;

(5) Medical treatment beyond first aid;

(6) Loss of consciousness; or

(7) A significant injury or illness diagnosed by a physician or other licensed health care professional, even if it did not result in (1) through (6) above.

h. "USACE" property and equipment specified in USACE EM 385-1-1 should be interpreted as Government property and equipment.

i. Weight Handling Equipment (WHE) Accident. A WHE accident occurs when any elements in the operating envelope fails to perform correctly during operation, including operation during maintenance or testing resulting in personnel injury or death; (minor injuries that are inherent to any industrial operation, including strains and repetitive motion related injury shall be reported by normal personnel injury reporting process of this contract.

j. Material or equipment damage; dropped load; derailment; two-blocking; overload (This includes load test when test load tolerances is exceeded); and/or collision, including unplanned contact between the load, crane, and/or other objects. A dropped load, derailment, two-blocking, overload and collision are considered accidents even though no material damage or injury occur. A component failure (e.g., motor burnout, gear tooth failure, bearing failure) is not considered an accident solely due to material or equipment damage unless the component failure results in damage to other components (e.g., dropped boom,

dropped load, rollover, etc.).

Exception. If a crane is used as an anchor point for a portable hoist/rigging gear, a rigging gear accident as defined in paragraph 12.3 NAVFAC P-307 is not considered a crane accident if the crane is not being operated (no functions are in motion) at the time of the rigging gear accident, unless the accident results in an overload or damage to the crane, in which case it shall be reported as a crane accident.

k. Rigging Gear Accident. For the purpose of this definition it is assumed there is an "Operating Envelop" around any weight handling operation and inside the envelop are the following Rigging and miscellaneous equipment used for lifting, the user of the rigging gear or equipment, other personnel involved in the operation, the load, the rigging gear or equipment's supporting structure, the loads rigging path and the rigging procedure.

l. A rigging gear accident occurs when any elements in the operating envelope fails to perform correctly during weight handling operations resulting in personnel injury or death, (minor injuries that are inherent to any industrial operation, including strains and repetitive motion related injury shall be reported by normal personnel injury reporting process of this contract. material or equipment damage, dropped load, two-blocking of cranes and powered hoists or an overload (This includes load test when test load tolerances is exceeded) The last three mentioned items are considered accidents even if no material damage or injuries occurred.

A component failure (e.g., motor burnout, gear tooth failure, bearing failure) is not considered an accident solely due to material or equipment damage unless the component failure results in damage to other components (e.g., dropped load, damaged load, etc.)

1.4 CONTRACTOR SAFETY SELF-EVALUATION CHECKLIST

Contracting Officer will provide a "Contractor Safety Self-Evaluation checklist" to the Contractor at the pre-construction conference. The checklist will be completed monthly by the Contractor and submitted with each request for payment voucher. An acceptable score of 90 or greater is required. Failure to submit the completed safety self-evaluation checklist or achieve a score of at least 90, will result in a retention of up to 10 percent of the voucher.

1.5 REGULATORY REQUIREMENTS

In addition to the detailed requirements included in the provisions of this contract, work performed shall comply with USACE EM 385-1-1, and the applicable federal, state, state, and local laws, host nation, ordinances, criteria, rules and regulations. Submit matters of interpretation of standards to the appropriate administrative agency for resolution before starting work. Where the requirements of this specification, applicable laws, criteria, ordinances, regulations, and referenced documents vary, the most stringent requirements shall apply.

1.6 SITE QUALIFICATIONS, DUTIES AND MEETINGS

1.6.1 Personnel Qualifications

1.6.1.1 Site Safety and Health Officer (SSHO)

a. The contractor shall provide a Safety oversight team that includes a minimum of one (1) Competent Person at each project site to function as the Safety and Health Officer (SSHO). The SSHO is required to have five (5) years of construction industry safety experience or three (3) years if the SSHO possesses a Certified Safety Professional (CSP) or safety and health degree. The SSHO shall be at the work site at all times, unless specified differently in the contract, to perform safety and occupational health management, surveillance, inspections, and safety enforcement for the Contractor, and their training, experience, and qualifications shall be as required by EM 385-1-1 paragraph 01.A.17 and all associated sub-paragraphs.

A Competent Person shall be provided for all of the hazards identified in the Contractor's Safety and Health Program in accordance with the accepted Accident Prevention Plan, and shall be on-site at all times when the work that presents the hazards associated with their professional expertise is being performed. The credentials of the Competent Person (s) shall be approved by the Contracting Officer in consultation with the Safety Office.

The Contractor Quality Control (QC) person cannot be the SSHO on this project, even though the QC has safety inspection responsibilities as part of the QC duties. However, the requirement in the “Task Order” shall always be a priority.

NOTE 1: Host Nation Safety training will be considered to the equivalent 30 hour OSHA Construction safety class training requirement. The Japan Construction Occupational Safety and Health Association (JCOSHA) provides the construction safety course **"Kouji Shunin"**, or **"Shochou"**, which is an acceptable equivalent to the 30-Hour OSHA Construction Safety Course mentioned above. Completion of this training will fulfill the requirements of the above. This training can be viewed at the JCOSHA website http://www.kensaibou.or.jp, or http://www.kensaibou.or.jp/english.

NOTE 2: All Host Nation Safety equivalent training, OSHA 30-Hour OSHA Construction Safety Class, and other Competent Person training will require re-fresher training every 5 years from the date of completion.

b. Complete the NAVFAC Far East 24-hr EM 385-1-1 Awareness Course for Contractors within 6 months of award of contract. The completion of the 24-hr EM 385-1-1 Awareness Course for Contractors cannot be used as credit for the 24-hrs of additional formal safety training required by EM 385-1-1, para 01.A.17.

SSHOs shall receive additional 24-hrs of formal safety training every 4 years for continuing safety training from a Host Country or CONUS recognized training provider IAW EM 385-1-1, para 01.A.17.

Note 3: EM 385-1-1 Awareness course will require re-fresher training every 5 years or when a new EM 385-1-1 manual is issued. Which ever comes first will apply.

Note 4: Certification of training for the EM 385-1-1 Awareness can be valid up to two years after a NEW edition of the EM 385-1-1 is placed into effect.

GDA reserves the authority to terminate or grant extensions of validation for the EM 385-1-1 Awareness course up to two years.

EM 385-1-1 Awareness Course is not all inclusive of the contract or project site safety requirements. SSHO and Prime Contractor are still required to implement a safety program IAW contract specification and Host Nation safety requirements.

1.6.1.2 Competent Person for Scaffolding

Provide a scaffolding competent person to perform the work meeting the definition and requirements of EM 385-1-1.

1.6.1.3 Competent Person for Confined Space Entry

Provide a competent person for confined space meeting the definition and requirements of EM 385-1-1.

For work involving marine operations that handle combustible or hazardous materials, this person shall have the ability to understand and follow through on the air sampling, PPE, and instructions of a Marine Chemist, Coast Guard authorized persons, or Certified Industrial Hygienist. All confined space and enclosed space work shall comply with NFPA 306, OSHA 29 CFR 1915, Subpart B, "Confined and Enclosed Spaces and Other Dangerous Atmospheres in Shipyard Employment" or as applicable, 1910.147 for general industry.

1.6.1.4 Crane Operators

Meet the crane operators requirements in USACE EM 385-1-1, Section 16 and Appendix I, NAVFAC P-307 and NAVFACFEINST 11260.1G or most current version. In addition, for mobile cranes with Original Equipment Manufacturer (OEM) rated capacitates of 0.5 tons or greater, designate crane operators as qualified by a source that qualifies crane operators (i.e., union, a government agency, or and organization that tests and qualifies crane operators). Provide proof of current qualification. Operators of Category four (UNIC) truck cranes are not allowed to operate the boom or load past the middle of the front stabilizers without prior written approval of the FEAD/ROICC officer.

The contractor shall also certify that all of crane (or other machines used for lifting suspended loads) operators working on the naval activity have been trained not to bypass safety devices (e.g. anti-two block devices) during lifting operations. Require that the certifications be posted on the crane.

Crane operators shall also meet the requirement of host nation’s laws and regulations regarding to Crane operation.

1.6.2 Personnel Duties

1.6.2.1 Site Safety and Health Officer (SSHO)/Superintendent

In addition to duties required in EM 385-1-1, perform the following duties:

a. Conduct daily safety and health inspections and maintain a written log which includes area/operation inspected, date of inspection, identified hazards, recommended corrective actions, estimated and actual dates of

corrections. Attach safety inspection logs to the Contractors' daily production report.

b. Conduct a crane specific safety brief if cranes or any other equipment used to suspend a load or rigging gear used by itself . To include all of the details of the lift and any obstructions to include working in the vicinity of power lines if this is the case there should be a critical lift plan submitted before work can start.

c. Conduct mishap investigations and complete required reports. Maintain the OSHA Form 300(or equivalent) and Daily Production reports for prime and sub-contractors.

d. Maintain applicable safety reference material on the job site.

e. Attend the pre-construction conference, pre-work meetings including preparatory inspection meeting, and periodic in-progress meetings.

f. Review implement and enforce accepted APPS and AHAs.

g. Maintain a safety and health deficiency tracking system that monitors outstanding deficiencies until resolution. Post a list of unresolved safety and health deficiencies the safety bulletin board.

h. Ensure sub-contractor compliance with safety and health requirements.

i. Maintain a list of hazardous chemicals on site and their material safety data sheets.

j. Complete Contractor Safety Self-Evaluation Checklist per paragraph 1.4.

k. Validates, ensures, and oversees onsite Competent Personnel (CP) are provided for all of the hazards identified in the Contractor's Safety and Health Program in accordance with the accepted Accident Prevention Plan, and are on-site when the work that presents the hazards associated with their professional expertise is being performed.

Failure to perform the above duties will result in dismissal of the superintendent and/or SSHO, and a project work stoppage. The project work stoppage will remain in effect pending approval of a suitable replacement.

1.6.3 Meetings

1.6.3.1 Preconstruction Conference

a. Contractor representatives who have a responsibility or significant role in accident prevention on the project shall attend the preconstruction conference. This includes the project superintendent, site safety and health officer, quality control supervisor, or any other assigned safety and health professionals who participated in the development of the APP (including the Activity Hazard Analyses (AHAs) and special plans, program and procedures associated with it).

b. The Contractor shall discuss the details of the submitted APP to include incorporated plans, programs, procedures and a listing of anticipated AHAs that will be developed and implemented during the performance of the contract. This list of proposed AHAs will be reviewed at the

conference and an agreement will be reached between the Contractor and the Contracting Officer's representative as to which phases will require an analysis. In addition, a schedule for the preparation, submittal, review, and acceptance of AHAs shall be established to preclude project delays.

c. Deficiencies in the submitted APP will be brought to the attention of the Contractor at the preconstruction conference, and the Contractor shall revise the plan to correct deficiencies and re-submit it for acceptance. Work shall not begin until there is an accepted APP.

d. The functions of a Preconstruction conference may take place at the Post-Award Kickoff meeting for Design & Build Contracts.

1.6.3.2 Safety Meetings

Conduct and document meetings as required by EM 385-1-1. Attach minutes showing contract title, signatures of attendees and a list of topics discussed to the Contractors' daily production report. Daily safety meeting for all workers performing work activities identified in the activity hazard analysis shall be conducted by the competent person(s) for that activity.

1.7 ACCIDENT PREVENTION PLAN (APP)

Use a qualified person to prepare the written site-specific APP. Prepare the APP in accordance with the format and requirements of USACE EM 385-1-1 and as supplemented herein. Cover all paragraph and subparagraph elements in USACE EM 385-1-1, Appendix A, "Minimum Basic Outline for Accident Prevention Plan". Specific requirements for some of the APP elements are described below. The APP shall be job-specific and address any unusual or unique aspects of the project or activity for which it is written. The APP shall interface with the Contractor's overall safety and health program. Include any portions of the Contractor's overall safety and health program referenced in the APP in the applicable APP element and made site-specific. The Government considers the Prime Contractor to be the "controlling authority" for all work site safety and health of the subcontractors. Contractors are responsible for informing their subcontractors of the safety provisions under the terms of the contract and the penalties for noncompliance, coordinating the work to prevent one craft from interfering with or creating hazardous working conditions for other crafts, and inspecting subcontractor operations to ensure that accident prevention responsibilities are being carried out. The APP shall be signed by the person and firm (senior person) preparing the APP, the Contractor, the on-site superintendent, the designated site safety and health officer and the Contractor Quality control Manager.

Submit the APP to the Contracting Officer 15 calendar days prior to the date of the preconstruction conference for acceptance. Work cannot proceed without an accepted APP.

Once accepted by the Contracting Officer, the APP and attachments will be enforced as part of the contract. Disregarding the provisions of this contract or the accepted APP will be cause for stopping of work, at the discretion of the Contracting Officer, until the matter has been rectified.

Once work begins, changes to the accepted APP shall be made with the knowledge and concurrence of the Contracting Officer, project

superintendent, SSHO and quality control manager. Should any hazard become evident, stop work in the area, secure the area, and develop a plan to remove the hazard. Notify the Contracting Officer within 24 hours of discovery. Eliminate/remove the hazard. In the interim, all necessary action shall be taken to restore and maintain safe working conditions in order to safeguard onsite personnel, visitors, the public (as defined by ASSE A10.34,) and the environment.

Copies of the accepted plan will be maintained at the Contracting Officer's office and at the job site.
The plan shall be continuously reviewed and amended, as necessary, throughout the life of the contract. Incorporate unusual or high-hazard activities not identified in the original APP as they are discovered.

1.7.1 EM 385-1-1 Contents

In addition to the requirements outlines in Appendix A of USACE EM 385-1-1, the following is required:

a. Names and qualifications (resumes including education, training, experience and certifications) of all Site Safety and Health Officer (SSHO) personnel designated to perform work on this project to include the and other competent and qualified personnel to be used such as Scaffolding, Fall Protection, Excavation, Electrical. Confined Spaces, etc. Specify the duties of each position.

b. Qualifications of competent and of qualified persons. As a minimum, competent persons shall be designated and qualifications submitted for each of the following major areas: excavation; scaffolding; fall protection; hazardous energy; confined space; health hazard recognition, evaluation and control of chemical, physical and biological agents; personal protective equipment and clothing to include selection, use and maintenance.

c. Confined Space Entry Plan. Develop a confined space entry plan in accordance with USACE EM 385-1-1, applicable OSHA standards 29 CFR 1910, 29 CFR 1915, and 29 CFR 1926, and any other federal, state and local regulatory requirements identified in this contract. Identify the qualified person's name and qualifications, training, and experience. Delineate the qualified person's authority to direct work stoppage in the event of hazardous conditions. Include procedure for rescue by contractor personnel and the coordination with emergency responders. (If there is no confined space work, include a statement that no confined space work exists and none will be created.)

d. Crane Critical Lift Plan. Prepare and sign weight handling critical lift plans for lifts over 75 percent of the capacity of the crane or hoist (or lifts over 50 percent of the capacity of a barge mounted mobile crane's hoists) at any radius of lift; lifts involving more than one crane or hoist; lifts of personnel; lifts made in the vicinity of overhead power lines, and lifts involving non-routine rigging or operation, sensitive equipment, or unusual safety risks.
The plan shall be submitted 15 calendar days prior to on-site work and include the requirements of NAVFAC P-307, paragraph 10.7.2.g and USACE EM 385-1-1, paragraph 16.H.

(1) The size and weight of the load to be lifted, including crane (or other machine) and rigging components that add to the weight. The OEM's maximum load capacities for the entire range of the lift shall also be provided.

(2) The lift geometry, including the crane (or other machine) position, boom length and angle, height of lift, and radius for the entire range of the lift. Applies to both single and tandem crane lifts.

(3) A rigging plan, showing the lift points, rigging gear, and rigging procedures.

(4) The environmental conditions under which lift operations are to be stopped.

(5) For lifts of personnel, the plan shall demonstrate compliance with the requirements of 29 CFR 1926.550(g).

(6) For barge mounted mobile cranes, barge stability calculations identifying crane placement/footprint; barge list and trim based on anticipated loading; and load charts based on calculated list and trim specific to the barge the crane is mounted on. The amount of list and trim shall be within the crane manufacturer’s requirements.

(7) For lifts in the vicinity of overhead power lines (i.e., if any part of the crane or other machine, including the fully extended boom of a telescoping boom crane or machine, or the load could approach the distances noted in figure 10-3 during a proposed operation), the plan shall demonstrate compliance To 29 CFR 1926.1408-1411.

e. Fall Protection and Prevention (FP&P) Plan. The plan shall be site specific and address all fall hazards in the work place and during different phases of construction. Address how to protect and prevent workers from falling to lower levels when they are exposed to fall hazards above 1.8 m (6 feet). A qualified person for fall protection shall prepare and sign the plan. Include fall protection and prevention systems, equipment and methods employed for every phase of work, responsibilities, assisted rescue, self-rescue and evacuation procedures, training requirements, and monitoring methods.. Revise the Fall Protection and Prevention Plan every six months for lengthy project, reflecting any changes during the course of construction due to changes in personnel, equipment, systems or work habits. Keep and maintain the accepted Fall Protection and Prevention Plan at the job site for the duration of the project. Include the Fall Protection and Prevention Plan in the Accident Prevention Plan (APP).

f. Occupant Protection Plan. The safety and health aspects of lead-based paint removal, prepared in accordance with Section 02 83 19.00 20 LEAD BASED PAINT HAZARD ABATEMENT, TARGET HOUSING & CHILD OCCUPIED FACILITIES.

g. Lead Compliance Plan. The safety and health aspects of lead work, prepared in accordance with Section 02 83 13.00 33 LEAD IN CONSTRUCTION.

h. Asbestos Hazard Abatement Plan. The safety and health aspects of asbestos work, prepared in accordance with 02 82 16.00 33 ENGINEERING CONTROL OF ASBESTOS CONTAINING MATERIALS.

i. Site Demolition Plan. The safety and health aspects prepared in accordance with Section 02 41 00.00 33 DEMOLITION and referenced sources.

1.8 ACTIVITY HAZARD ANALYSIS (AHA)

The Activity Hazard Analysis (AHA) format (see attached) shall be in accordance with USACE EM 385-1-1, Section 1 and the attached “Activity Hazard Analysis Review”. Submit the AHA for review at least fifteen (15) calendar days prior to the start of each Definable Feature Of Work (DFOW). Format subsequent AHAs as amendments to the APP. The analysis should be used during daily inspections to ensure the implementation and effectiveness of the activity's safety and health controls.

The AHA list will be reviewed periodically (at least monthly) at the Contractor supervisory safety meeting and updated as necessary when procedures, scheduling, or hazards change.

Develop the activity hazard analyses using the project schedule as the basis for the DFOWs to be performed. Any DFOWs listed on the project schedule will require an AHA. The AHAs will be developed by the contractor, supplier or subcontractor and provided to the prime contractor for submittal to the Contracting Officer.

Integrate the concepts of Operational Risk Management (ORM) into the AHA. Identify the hazards of the activity in the Principle Steps, Assess the Risks in the Potential Safety and Health Hazards, Make Risks Decisions in the Recommended Controls, Implement Controls for the Equipment and Training and supervise during the Inspection Process.

1.9 DISPLAY OF SAFETY INFORMATION

Within 1 calendar day after commencement of work, erect a safety bulletin board at the job site. *Where size, duration, or logistics of project do not facilitate a bulletin board, an alternative method, acceptable to the Contracting Officer, that is accessible and includes all mandatory information for employee and visitor review, shall be deemed as meeting the requirement for a bulletin board.* Include and maintain information on safety bulletin board as required by EM 385-1-1, section 01.A.06. Additional items required to be posted include:

a. Confined space entry permit.

b. Hot work permit.

1.10 SITE SAFETY REFERENCE MATERIALS

Maintain safety-related references applicable to the project, including those listed in the article "References." Maintain applicable equipment manufacturer's manuals.

1.11 EMERGENCY MEDICAL TREATMENT

Contractors will arrange for their own emergency medical treatment. Government has no responsibility to provide emergency medical treatment.

1.12 REPORTS

1.12.1 Accident Reports

a. Conduct an accident investigation for recordable injuries and illnesses, as defined in 1.3.g and property damage accidents resulting in at least $20,000 in damages, and near misses as defined in EM-385-1-1, to establish the root cause(s) of the accident. Complete the applicable Contractor Incident Report System (CIRS) and provide the report to the Contracting Officer within 24 hours of the accident. Provide final CIRS within 40 calendar days of the accident. The Contracting Officer will provide copies of any required or special forms.

b. Conduct an accident investigation for any weight handling equipment accident (including rigging gear accidents) to establish the root cause(s) of the accident, complete the WHE Accident Report (Crane and Rigging Gear) form and provide the report to the Contracting Officer within five (5 days) of the accident. Do not proceed with crane operations until cause is determined and corrective actions have been implemented to the satisfaction of the contracting officer. The Contracting Officer will provide a blank copy of the accident report form.

1.12.2 Accident Notification

Notify the Contracting Officer as soon as practical, but not later than four hours, after any accident meeting the definition of Recordable Injuries or Illnesses or High Visibility Accidents, property damage equal to or greater than $2,000, or any weight handling equipment accident and complete the NAVFAC Initial Mishap Notification form (see attached) to the Contracting Officer. Within notification include contractor name; contract title; type of contract; name of activity, installation or location where accident occurred; date and time of accident; names of personnel injured; extent of property damage, if any; extent of injury, if known, and brief description of accident (to include type of construction equipment used, PPE used, etc.). Preserve the conditions and evidence on the accident site until the Government investigation team arrives on-site and Government investigation is conducted.

a. Crane Accident Notification

Require the contractor to notify the contracting officer as soon as practical, but not later than four hours, after any WHE accident. (See definition in section 12.) Require the contractor to secure the accident site and protect evidence until released by the contracting officer. Require the contractor to conduct an accident investigation to establish the root cause(s) of any WHE accident. Crane operations shall not proceed until cause is determined and corrective actions have been implemented to the satisfaction of the contracting officer. Require the contractor to provide the contracting officer within 30 days of any accident a Crane and Rigging Gear Accident Report using the form provided in attachment 1 consisting of a summary of circumstances, an explanation of causes(s), photographs (if available), and corrective actions taken. These notifications and reporting requirements are in

addition to those promulgated by OPNAVINST 5100.23 and related command instructions.

1.12.3 Crane Reports

Submit pre-use check list attachment page 7 on a daily basis that cranes are utilized on project site.

1.12.4 Certificate of Compliance

Provide a Certificate of Compliance for each crane, or other equipment used to lift or suspend a load and rigging gear entering an activity under this contract (see Contracting Officer for a blank certificate). State within the certificate that the crane and rigging gear meet applicable OSHA regulations (with the Contractor citing which OSHA regulations are applicable, e.g., cranes used in construction, demolition, or maintenance comply with applicable ANSI or ASME, 29 CFR 1926, and USACE EM 385-1-1 section 16 and Appendix I) and crane and rigging gear conform to the appropriate host country safety standards. Certify on the Certificate of Compliance that the crane operator(s) is qualified and trained in the operation of the crane to be used. For cranes machines and rigging equipment at naval activities in foreign countries, the Contractor shall certify that the cranes, machines, and rigging gear conform to the appropriate host country safety standards. The Contractor shall also certify that all of its crane operators working on the DOD activity have been trained in the proper use of all safety devices (e.g., anti-two block devices) and not to bypass these devices. These certifications shall be posted on the crane.

For multi-purpose machines, material handling equipment, and construction equipment used to lift loads suspended by rigging equipment, require proof or authorization from the machine OEM (Original Equipment Manufacture) that the machine is capable of making lifts of loads suspended by rigging equipment. Require the contractor to demonstrate that the equipment is properly configured to make such lifts and is equipped with a load chart.

1.13 HOT WORK

Submit and obtain a written permit prior to performing "Hot Work" (welding, cutting, etc.) or operating other flame-producing/spark producing devices, from the Fire Division. CONTRACTORS ARE REQUIRED TO MEET ALL CRITERIA BEFORE A PERMIT IS ISSUED. The Contractor will provide at least two (2) twenty (20) pound 4A:20 BC rated extinguishers for normal "Hot Work". All extinguishers shall be current inspection tagged, approved safety pin and tamper resistant seal. It is also mandatory to have a designated FIRE WATCH for any "Hot Work" done at this activity. The Fire Watch shall be trained in accordance with NFPA 51B and remain on-site for a minimum of one hour after completion of the task or as specified on the hot work permit.

When starting work in the facility, require their personnel to familiarize themselves with the location of the nearest fire alarm boxes and place in memory the emergency Fire Division phone number. ANY FIRE, NO MATTER HOW SMALL, SHALL BE REPORTED TO THE RESPONSIBLE FIRE DIVISION IMMEDIATELY.

The fire watch has the responsibility to make certain the hot work area is maintained in a fire-safe condition throughout the performance of the hot work and has the authority to stop hot work if unsafe conditions are observed. The fire watch must understand the basic hazards of any

combustible construction involved with the hot work area the fire exposure hazard that hot work creates to occupancies adjacent to or below the hot work operation, the hazards associated with the occupancy, and the need to maintain proper isolation of all hot work operations from combustible or flammable materials. The fire watch should also be properly trained in use of manual, portable fire extinguishers and emergency notification procedures within the facility.

1.13.1 Hazardous Areas

Hazardous areas shall be defined as any area within 30 m (100 feet) of active aboveground storage tanks, areas within 30 m (100 feet) of leaking sections of fuel pipelines or other vapor sources, areas within 60 m (200 feet) of the downwind side of potential vapor emission sources (i.e., pressure vacuum vents or open vents on active tanks, leaking sections of pipelines), areas within existing tanks, and areas within a dike.

1.13.2 Daily "Hot Work" permits shall be required for "hot work" in hazardous areas. "Hot work" permits shall be issued by the Station Fire Department.

1.13.3 "Hot work" shall not be permitted during fuel transfer operations at or near the work site.

1.13.4 "Hot work" shall not be permitted within 30 m (100 feet) of storage tanks containing JP 4, AVGAS, or MOGAS.

1.13.5 "Hot work" shall not be permitted within 30 m (100 feet) of leaking sections of fuel pipelines.

1.13.6 "Hot work" shall not be permitted within 60 m (200 feet) of the downwind side of potential vapor emission sources such as pressure vacuum vents, open tank vents, or leaking sections of fuel pipelines.

1.14 SCAFFOLDING PLAN

Submit scaffolding plan within 15 calendar days prior to start of work. Provide scaffolds in accordance with the Japanese Labor Safety and Sanitation Law and U.S. Department of Labor Occupational Safety and Health Administration (OSHA) Regulation, 29 CFR 1926. Scaffolding shall have guardrails, mid-rails, toeboards, and ramps. Scaffolding shall be one of the following types: (1) steel pipe scaffolds (Tankan-ashiba); (2) steel pipe frame type scaffolds (Wakugumi-ashiba); (3) hung type scaffolds (Tsuri ashiba); (4) movable scaffolding; in accordance with JASS 2.5 and Japanese Industrial Standard JIS A 8951, Tubular Steel Scaffolds. Provide warning signs (sign-board) on the scaffolding to prevent unauthorized persons from climbing on the scaffolding regardless of where it was located. Sample figure of warning sign is attached as ATTACHMENT-5 at the end of this section. Scaffolding plan shall include license for scaffolding competent person.

1.15 FLAMMABLE/COMBUSTIBLE LIQUIDS

Plastic containers shall not be used for storage of flammable and combustible liquids. Safety cans of not more than 5 gal (18.9 Liters) capacity, having a spring-closing cover and designed to safely relieve internal pressures under fire exposures shall be used on this project. The

safety can shall be labeled/listed and painted red with a yellow band around the can and the name of the contents legibly indicated on the container. The safety can shall be kept in well ventilated locations, free from excessive heat, smoke, sparks, flame, or direct rays of the sun.

1.16 RADIATION SAFETY REQUIREMENTS

Use of radiation materials or equipment is strictly prohibited for all NAVFAC Far East project sites and facilities. The Prime Contractor is responsible to ensure all sub-contractors are in compliance with this requirement.

1.17 FACILITY OCCUPANCY CLOSURE

Streets, walks, and other facilities occupied and used by the Government shall not be closed or obstructed without written permission from the Contracting Officer.

1.18 SEVERE STORM PLAN

In the event of a severe storm warning, the Contractor must:

a. Secure outside equipment and materials and place materials that could be damaged in protected areas.

b. Check surrounding area, including roof, for loose material, equipment, debris, and other objects that could be blown away or against existing facilities.

c. Ensure that temporary erosion controls are adequate.

1.19 CONFINED SPACE ENTRY REQUIREMENTS

Contractors entering and working in confined spaces performing shipyard industry work are required to follow the requirements of OSHA 29 CFR Part 1915 Subpart B. Contractors entering and working in confined spaces performing general industry work are required to follow the requirements of OSHA 29 CFR Part 1926.

Navy personnel entering and working in confined spaces performing naval maritime facility work are required to follow the requirements of NAVSEA S6470-AA-SAF-101 Rev. 03. Navy personnel entering and working in confined spaces performing non-maritime facility work are required to follow the requirements of OPNAVINST 5100.23G Chapter 27.

PART 2 PRODUCTS

2.1 CONFINED SPACE SIGNAGE

The Contractor shall provide permanent signs integral to or securely attached to access covers for new permit-required confined spaces. Signs wording: "DANGER--PERMIT-REQUIRED CONFINED SPACE - DO NOT ENTER -" in English and Japanese bold letters a minimum of 25 mm (one inch) in height and constructed to be clearly legible with all paint removed. The signal word "DANGER" shall be red and readable from 1.52 m (5 feet).

2.2 FALL PROTECTION ANCHORAGE

Leave in place fall protection anchorage, conforming to ASSE/SAFE Z359.1, installed under the supervision of a qualified person in fall protection, for continued customer use and so identified by signage stating the capacity of the anchorage (strength and number of persons who may be tied-off to it at any one time).

PART 3 EXECUTION

3.1 CONSTRUCTION AND/OR OTHER WORK

Comply with USACE EM 385-1-1, NFPA 241, the APP, the AHA, Federal and/or State OSHA regulations, and other related submittals and activity fire and safety regulations. The most stringent standard prevails.

3.1.1 Hazardous Material Use

Each hazardous material must receive approval from the Contracting Office or their designated representative prior to being brought onto the job site or prior to any other use in connection with this contract. Allow a minimum of 10 working days for processing of the request for use of a hazardous material. Maintain all Material Safety Data Sheets of approved hazardous materials at the work place during their usage.

3.1.2 Hazardous Material Exclusions

Notwithstanding any other hazardous material used in this contract, radioactive materials or instruments capable of producing ionizing/non-ionizing radiation (with the exception of radioactive material and devices used in accordance with USACE EM 385-1-1 such as nuclear density meters for compaction testing and laboratory equipment with radioactive sources) as well as materials which contain asbestos, mercury or polychlorinated biphenyls, di-isocynates, lead-based paint are prohibited. The Contracting Officer, upon written request by the Contractor, may consider exceptions to the use of any of the above excluded materials. The Radiation Safety Officer (RSO) must be notified prior to excepted items of radioactive material and devices being brought on base.

3.1.3 Unforeseen Hazardous Material

The design should have identified materials such as PCB, lead paint, and friable and non-friable asbestos and other regulated materials defined in JEGS or OSHA (i.e. 29 CFR Part 1910.1000). If additional material, not indicated, that may be hazardous to human health upon disturbance during construction operations is encountered, stop that portion of work and notify the Contracting Officer and CFAY PWD Environmental Department immediately. CFAY PWD Environmental will provide additional guidance as appropriate. Within **35** calendar days the Government will determine if the material is hazardous. If material is not hazardous or poses no danger, the Government will direct the Contractor to proceed without change. If material is hazardous and handling of the material is necessary to accomplish the work, the Government will issue a modification subject to availability of funds

pursuant to "FAR 52.243-4, Changes" and "FAR 52.236-2, Differing Site Conditions."

3.2 PRE-OUTAGE COORDINATION MEETING

Contractors are required to apply for utility outages except otherwise specified in each Task Order, at least 15 days in advance. As a minimum, the request should include the location of the outage, utilities being affected, duration of outage and any necessary sketches. Special requirements for electrical outage requests are contained elsewhere in this specification section. Once approved, and prior to beginning work on the utility system requiring shut down, the Contractor shall attend a pre-outage coordination meeting with the Contracting Officer to review the scope of work and the lock-out/tag-out procedures for worker protection. No work will be performed on energized electrical circuits unless proof is provided that no other means exist.

3.3 CONTROL OF HAZARDOUS ENERGY (LOCKOUT/TAGOUT)

Whenever possible, all equipment and circuits to be worked on shall be de-energized before work is started and personnel protected by clearance procedures, lockout/tagout, and grounding.

Work on energized equipment or circuits will require the completion of the NAVFAC Far East Energized Electrical Work Permit and approval from the NAVFAC Far East Commanding Officer. Permit can be obtained from the Contracting Officer.

Contractor shall ensure that each employee is familiar with and complies with these procedures and USACE EM 385-1-1, Section 12, Control of Hazardous Energy.

Contracting Officer will, at the Contractor's request, apply lockout/tagout tags and take other actions that, because of experience and knowledge, are known to be necessary to make the particular equipment safe to work on for government owned and operated systems.

No person, regardless of position or authority, shall operate any switch, valve, or equipment that has an official lockout/tagout tag attached to it, nor shall such tag be removed except as provided in this section. No person shall work on any energized equipment including, but not limited to activities such as erecting, installing, constructing, repairing, adjusting, inspecting, un-jamming, setting up, trouble shooting, testing, cleaning, dismantling, servicing and maintaining machines equipment of processes until an evaluation has been conducted identifying the energy source and the procedures which will be taken to ensure the safety of personnel.

When work is to be performed on electrical circuits, only qualified personnel shall perform work on electrical circuits.

No person shall work on any equipment that requires a lockout/tagout tag unless he, his immediate supervisor, project leader, or a subordinate has in his possession the stubs of the required lockout/tagout tags.

A supervisor who is required to enter an area protected by a lockout/tagout tag will be considered a member of the protected group provided he notifies

the holder of the tag stub each time he enters and departs from the protected area.

Identification markings on building light and power distribution circuits shall not be relied on for established safe work conditions.

Before clearance will be given on any equipment other than electrical (generally referred to as mechanical apparatus), the apparatus, valves, or systems shall be secured in a passive condition with the appropriate vents, pins, and locks.

Pressurized or vacuum systems shall be vented to relieve differential pressure completely.

Vent valves shall be tagged open during the course of the work.

Where dangerous gas or fluid systems are involved, or in areas where the environment may be oxygen deficient, system or areas shall be purged, ventilated, or otherwise made safe prior to entry.

3.3.1 Tag Placement

Lockout/tagout tags shall be completed in accordance with the regulations printed on the back thereof and attached to any device which, if operated, could cause an unsafe condition to exist.

If more than one group is to work on any circuit or equipment, the employee in charge of each group shall have a separate set of lockout/tagout tags completed and properly attached.

When it is required that certain equipment be tagged, the Government will review the characteristics of the various systems involved that affect the safety of the operations and the work to be done; take the necessary actions, including voltage and pressure checks, grounding, and venting, to make the system and equipment safe to work on; and apply such lockout/tagout tags to those switches, valves, vents, or other mechanical devices needed to preserve the safety provided. This operation is referred to as "Providing Safety Clearance."

3.3.2 Tag Removal

When any individual or group has completed its part of the work and is clear of the circuits or equipment, the supervisor, project leader, or individual for whom the equipment was tagged shall turn in his signed lockout/tagout tag stub to the Contracting Officer. That group's or individual's lockout/tagout tags on equipment may then be removed on authorization by the Contracting Officer.

3.4 FALL HAZARD PROTECTION AND PREVENTION PROGRAM

Establish a Site-Specific Fall Protection and Prevention Plan IAW EM 385-1-1, para 21.C, for the protection of all employees exposed to fall hazards. Within the program include company policy, identify responsibilities, education and training requirements, fall hazard identification, prevention and control measures, inspection, storage, care and maintenance of fall protection equipment and rescue and evacuation procedures.

Safety monitoring systems are not adequate fall protection and are not authorized for any fall protection hazards. A 100 percent fall protection program will be instituted for all projects. Safety nets will be required for all unguarded work areas 25 feet or more above the adjacent floor level.

For workers erecting and dismantling scaffolds, an evaluation shall be conducted by a Competent Person (CP) for fall protection to determine the feasibility and safety of providing fall protection. If fall protection is not feasible, then an AHA detailing the rational for infeasibility of use of fall protection shall be submitted to the Contracting Officer for review and acceptance.

AHA shall be attached or part of the Scaffolding Plan.

3.4.1 Training

Institute a fall protection training program. As part of the Fall Hazard Protection and Prevention Program, provide training for each employee who might be exposed to fall hazards. Provide training by a competent person for fall protection in accordance with USACE EM 385-1-1, Section 21.B.

3.4.2 Fall Protection Equipment and Systems

Enforce use of the fall protection equipment and systems designated for each specific work activity in the Fall Protection and Prevention Plan and/or AHA at all times when an employee is exposed to a fall hazard. Protect employees from fall hazards as specified in EM 385-1-1, Section 21. In addition to the required fall protection systems, safety skiff, personal floatation devices, life rings etc., are required when working above or next to water in accordance with USACE EM 385-1-1, Paragraphs 21.N through 21.N.04. Personal fall arrest systems are required when working from an articulating or extendible boom, swing stages, or suspended platform. In addition, personal fall arrest systems are required when operating other equipment such as scissor lifts if the work platform is capable of being positioned outside the wheelbase. The need for tying-off in such equipment is to prevent ejection of the employee from the equipment during raising, lowering, or travel. Fall protection must comply with 29 CFR 1926.500, Subpart M, USACE EM 385-1-1 and ASSE/SAFE A10.32.

3.4.2.1 Personal Fall Arrest Equipment

Personal fall arrest equipment, systems, subsystems, and components shall meet ASSE/SAFE Z359.1. Only a full-body harness with a shock-absorbing lanyard or self-retracting lanyard is an acceptable personal fall arrest body support device. Body belts may only be used as a positioning device system (for uses such as steel reinforcing assembly and in addition to an approved fall arrest system). Harnesses shall have a fall arrest attachment affixed to the body support (usually a Dorsal D-ring) and specifically designated for attachment to the rest of the system. Only locking snap hooks and carabineers shall be used. Webbing, straps, and ropes shall be made of synthetic fiber. The maximum free fall distance when using fall arrest equipment shall not exceed 1.8 m(6 feet). The total fall distance and any swinging of the worker (pendulum-like motion) that can occur during a fall shall always be taken into consideration when attaching a person to a fall arrest system.

3.4.3 Fall Protection for Roofing Work

Implement fall protection controls based on the type of roof being constructed and work being performed. Evaluate the roof area to be accessed for its structural integrity including weight-bearing capabilities for the projected loading.

a. Low Sloped Roofs:

(1) For work within 1.8 m(6 feet) of an edge, on low-slope roofs, Protect personnel from falling by use of personal fall arrest systems, guardrails, or safety nets. A safety monitoring system is not adequate fall protection and is not authorized.

(2) For work greater than 1.8 m(6 feet) from an edge, erect and install warning lines in accordance with 29 CFR 1926.500 and USACE EM 385-1-1.

b. Steep-Sloped Roofs: Work on steep-sloped roofs requires a personal fall arrest system, guardrails with toe-boards, or safety nets. This requirement also includes residential or housing type construction.

3.4.4 Existing Anchorage

Certified (or re-certified) by a qualified person for fall protection existing anchorages, to be used for attachment of personal fall arrest equipment in accordance with ASSE/SAFE Z359.1. Exiting horizontal lifeline anchorages must be certified (or re-certified) by a registered professional engineer with experience in designing horizontal lifeline systems.

3.4.5 Horizontal Lifelines

Design, install, certify and use under the supervision of a qualified person horizontal lifelines for fall protection as part of a complete fall arrest system which maintains a safety factor of 2 (29 CFR 1926.500).

3.4.6 Guardrails and Safety Nets

Design, install and use guardrails and safety nets in accordance with EM 385-1-1 and 29 CFR 1926 Subpart M.

3.4.7 Rescue and Evacuation Procedures

When personal fall arrest systems are used, the contractor must ensure that the mishap victim can self-rescue or can be rescued promptly should a fall occur. Prepare a Rescue and Evacuation Plan and include a detailed discussion of the following: methods of rescue; methods of self-rescue; equipment used; training requirement; specialized training for the rescuers; procedures for requesting rescue and medical assistance; and transportation routes to a medical facility. Include the Rescue and Evacuation Plan within the Activity Hazard Analysis (AHA) for the phase of work, in the Fall Protection and Prevention (FP&P) Plan, and the Accident Prevention Plan (APP).

3.5 SCAFFOLDING

Provide employees with a safe means of access to the work area on the scaffold. Climbing of any scaffold braces or supports not specifically designed for access is prohibited. Access scaffold platforms greater than 6 m(20 feet) maximum in height by use of a scaffold stair system. Do not use vertical ladders commonly provided by scaffold system manufacturers for accessing scaffold platforms greater than 6 m(20 feet) maximum in height. The use of an adequate gate is required. Ensure that employees are qualified to perform scaffold erection and dismantling. Do not use scaffold without the capability of supporting at least four times the maximum intended load or without appropriate fall protection as delineated in the accepted fall protection and prevention plan. Stationary scaffolds must be attached to structural building components to safeguard against tipping forward or backward. Give special care to ensure scaffold systems are not overloaded. Side brackets used to extend scaffold platforms on self-supported scaffold systems for the storage of material is prohibited. The first tie-in shall be at the height equal to 4 times the width of the smallest dimension of the scaffold base. Place work platforms on mud sills. Scaffold or work platform erectors shall have fall protection during the erection and dismantling of scaffolding or work platforms that are more than six feet. Delineate fall protection requirements when working above six feet or above dangerous operations in the Fall Protection and Prevention (FP&P) Plan and Activity Hazard Analysis (AHA) for the phase of work.

Submit scaffolding plan within 15 calendar days prior to start of work. Manufactured scaffolding shall be erected, used, tested, maintained, and repaired in accordance with EM 385-1-1, Section 22 or equivalent and manufacture recommendations. All scaffolding shall have guardrails, midrails, toeboards, and safe means of access IAW EM 385-1-1, Section 21,22, and 24. Stairways shall be provided for scaffolding greater than 20 ft (12 m) unless fall protection is used.

Scaffolding with a mesh, plastic, tarp, etc. covering will require a Registered Professional Engineer (RPE) to design and certify the scaffolding system is adequately braced, supported, anchored, etc. for maximum anticipated wind loads for the area and season.

Scaffold plan shall consist of detailed engineering drawing of the scaffolding system to include size and dimensions of mudsills, safe access points, tie-ins/anchoring of scaffold, location of outriggers, guardrails, mid-rails, maximum rated capacity, etc. for GDA review and acceptance.

All scaffolding designs and components shall be capable of supporting without failure at least 4 times the maximum anticipated loads and validated by the Competent Person (CP) or Qualified Person (QP) for safe scaffolding

3.5.1 Scaffold Tagging System

Contractors shall use a scaffold tagging system in which all scaffolds are tagged by the Competent Person. Tags shall be color-coded: green indicates the scaffold has been inspected and is safe to use; red indicates the scaffold is unsafe to use. Tags shall be readily visible, made of materials that will withstand the environment in which they are used, be legible and shall include:

a. The Competent Person’s name and signature;

b. Dates of initial and last inspections.

3.5.2 Stilts

The use of stilts for gaining additional height in construction, renovation, repair or maintenance work is prohibited.

3.6 EQUIPMENT

3.6.1 Contractor Operated Crane

a. Require the contractor to comply with applicable ANSI or ASME standards (e.g., ASME B30.0 for construction tower cranes, and ASME B30.8 for floating cranes, ASME B30.9 for slings, ASMEB30.20 for below the hook lifting device, and ASME B30.26 for rigging hardware, ANSI/ITSDF B56.6 for rough terrain forklifts) or equivalent host nation regulations.

b. Require that all hooks used on cranes, hoists, other machines, and rigging gear shall have self-closing latches or the throat opening shall be “mouse” (secured with wire, rope, heavy tape, etc.) or otherwise secured to prevent the attached item from coming free of the hook under a slack condition. The following exceptions apply and shall be approved by the contractor’s technical organization: items where the hook throat is fully obstructed and not available for manual securing and lifts where securing the hook throat increases the danger to personnel such as forge shop, dip tank, or underwater work.

3.6.2 Material Handling Equipment

a. Material handling equipment such as forklifts shall not be modified with work platform attachments for supporting employees unless specifically delineated in the manufacturer's printed operating instructions.

b. The use of hooks on equipment for lifting of material must be in accordance with manufacturer's printed instructions. The manufacture must provide a load chart and instruction on the proper use of the hook.

c. Operators of forklifts or power industrial trucks shall be licensed in accordance with OSHA.

d. Material handling equipment (MHE) shall be inspected daily prior to being used and inspection records shall be maintained for the duration of the project.

3.6.3 Weight Handling Equipment

Comply with EM 385-1-1, Section 16, host nation safety standards, NAVFAC P-307, and NAVFACFEINST 11260.1G or most current version.

a. Equip cranes and derricks as specified in EM 385-1-1, section 16.

b. Notify the Contracting Officer 15 days in advance of any cranes entering the activity so that necessary quality assurance spot checks can be coordinated. Contractor's operator shall remain with the crane during the spot check.

c. The Contracting Officer or there representative will perform on-site-spot checks to assure that crane safety is observed and any unsafe

conditions or actions will cause the stoppage of crane work. The Contractor Crane Operation Checklist and Contractor Crane Operator's daily checklist attached at the end of this section will be utilized for this surveillance.

d. Comply with the crane manufacturer's specifications and limitations for erection and operation of cranes and hoists used in support of the work. Perform erection under the supervision of a designated person (as defined in ASME B30.5). Perform all testing in accordance with the manufacturer's recommended procedures.

e. Comply with ASME B30.5 for mobile and locomotive cranes, ASME B30.22 for articulating boom cranes, ASME B30.3 for construction tower cranes, and ASME B30.8 for floating cranes and floating derricks.

f. Under no circumstance shall a Contractor make a lift at or above 90% of the cranes rated capacity in any configuration.

g. When operating in the vicinity of overhead transmission lines, operators and riggers shall be alert to this special hazard and follow the requirements of USACE EM 385-1-1 Section 11 and ASME B30.5 or ASME B30.22 as applicable and the requirements of the NAVFAC P-307 for critical lifts.

h. Do not crane suspended personnel work platforms (baskets) unless the Contractor proves that using any other access to the work location would provide a greater hazard to the workers or is impossible. Do not lift personnel with a line hoist or friction crane. Personal lift must comply with 29 CFR 1926.550 (g) and be approved by NAVFAC and Base safety Offices prior to the lift being conducted.

i. Inspect, maintain, and recharge portable fire extinguishers as specified in NFPA 10, Standard for Portable Fire Extinguishers.

j. All employees must keep clear of loads about to be lifted and or suspended loads.

k. Use cribbing when performing lifts on outriggers.

l. The crane hook/block must be positioned directly over the loads center of gravity. Side loading of the crane is prohibited.

m. A physical barricade must be positioned to prevent personnel from entering the counterweight swing (tail swing) area of the crane.

n. Certification records which include the date of inspection, signature of the person performing the inspection, and the serial number or other identifier of the crane that was inspected shall always be available for review by Contracting Officer personnel.

o. Written reports listing the load test procedures used along with any repairs or alterations performed on the crane shall be available for review by Contracting Officer personnel.

p. Certify that all crane operators have been trained in proper use of all safety devices (e.g. anti-two block devices) and that these devices will not be bypassed during lifting operations.

q. Take steps to ensure that wind speed does not contribute to loss of control of the load during lifting operations. Prior to conducting lifting operations set a maximum wind speed at which a crane can be safely operated based on the equipment being used, the load being lifted, experience of operators and riggers, and hazards on the work site. This maximum wind speed determination shall be included as part of the activity hazard analysis plan for that operation.

r. A wind gage shall be installed on the boom tip of the crane. A reading device shall be installed at the operator's station. All lifts will be suspended when the wind speeds reach or exceed the crane manufacturer's recommendations.

s. All lifts will be made with the outriggers fully extended to the appropriate setting indicated by the load chart. The outriggers will be deployed so that the weight of the machine is totally removed from the wheels at every setting.

t. The Contractor will ensure with the local NAVFAC the ground loading prior to setting up any crane.

3.6.4 Machinery and Mechanized Equipment

a. Proof of qualifications for operator shall be kept on the project site for review.

b. Manufacture specifications or owner's manual for the equipment shall be on-site and reviewed for additional safety precautions or requirements that are sometimes not identified by OSHA or USACE EM 385-1-1. Such additional safety precautions or requirements shall be incorporated into the AHAs.

c. Shall be equipped with at least one fire extinguisher with a minimum rating of 10-B:C.

3.7 ELECTRICAL

3.7.1 Conduct of Electrical Work

Underground electrical spaces must be certified safe for entry before entering to conduct work. Cables that will be cut must be positively identified and de-energized prior to performing each cut. Positive cable identification must be made prior to submitting any outage request for electrical systems. Arrangements are to be coordinated with the Contracting Officer and Station Utilities for identification. The Contracting Officer will not accept an outage request until the Contractor satisfactorily documents that the circuits have been clearly identified. Perform all high voltage cable cutting remotely using hydraulic cutting tool. When racking in or live switching of circuit breakers, no additional person other than the switch operator will be allowed in the space during the actual operation. Plan so that work near energized parts is minimized to the fullest extent possible. Use of electrical outages clear of any energized electrical sources is the preferred method. When working in energized substations, only qualified electrical workers will be permitted to enter. When work requires Contractor to work near energized circuits as defined by the NFPA 70, high voltage personnel must use personal protective equipment

that includes, as a minimum, electrical hard hat, safety shoes, insulating gloves with leather protective sleeves, fire retarding shirts, coveralls, face shields, and safety glasses. In addition, provide electrical arc flash protection for personnel as required by NFPA 70E. Insulating blankets, hearing protection, and switching suits may also be required, depending on the specific job and as delineated in the Contractor's AHA.

Whenever possible, all equipment and circuits to be worked on shall be de-energized before work is started and personnel protected by clearance procedures, lockout/tagout, and grounding.

Work on energized equipment or circuits will require the completion of the NAVFAC Far East Energized Electrical Work Permit and approval from the NAVFAC Far East Commanding Officer. Permit can be obtained from the Contracting Officer.

3.7.2 Portable Extension Cords

Size portable extension cords in accordance with manufacturer ratings for the tool to be powered and protected from damage. Immediately removed from service all damaged extension cords. Portable extension cords shall meet the requirements of NFPA 70E and OSHA electrical standards.

3.7.3 Ground Fault Circuit Interrupter (GFCI)

All receptacle outlets that provide temporary electrical power during construction, remodeling, maintenance, repair, or demolition shall have a Ground Fault Circuit Interrupter (GFCI) protection for personnel IAW EM 385-1-1, para 11.D.05.

The GFCI device shall be calibrated to trip within the threshold values of 5 ma +/- 1 ma.

All GFCI’s shall be tested at least monthly with a GFCI tester that applies a load to the GFCI circuit in addition to a function test.

3.7.4 Temporary Wiring and Lighting

All temporary electrical distribution systems and devices shall be checked and found acceptable for polarity, ground continuity, and ground resistance (less than 25 ohms) before initial use, before use after repair/modification and inspected/tested at least monthly by a Qualified Person (QP) for electrical safety.

Temporary lighting circuits shall be separated from electrical tool circuits. Receptacle circuits shall be dedicated to either temporary lighting or electrical tools and shall be labeled “Lights Only” or “Tools Only” as applicable.

3.8 WORK IN CONFINED SPACES

Comply with the requirements in Section 34 of USACE EM 385-1-1, OSHA 29 CFR 1910.146 and OSHA 29 CFR 1926.21(b)(6). Any potential for a hazard in the confined space requires a permit system to be used.

a. Entry Procedures. Prohibit entry into a confined space by personnel for any purpose, including hot work, until the qualified person has

conducted appropriate tests to ensure the confined or enclosed space is safe for the work intended and that all potential hazards are controlled or eliminated and documented. (See Section 34 of USACE EM 385-1-1 for entry procedures.) All hazards pertaining to the space shall be reviewed with each employee during review of the AHA.

b. Forced air ventilation is required for all confined space entry operations and the minimum air exchange requirements must be maintained to ensure exposure to any hazardous atmosphere is kept below its' action level.

c. Sewer wet wells require continuous atmosphere monitoring with audible alarm for toxic gas detection.

3.9 SAFETY APPAREL ON CONSTRUCTION JOBSITES

All personnel on construction jobsites shall wear high-visibility safety apparel (garment, vest, or harness of retroreflective and fluorescent material) meeting ANSI/ISEA 107 2004 or later requirements. As a minimum, all personnel shall wear ANSI/ISEA 107 2004 Class II compliant apparel. When the risk level exceeds, Class II, then Class III safety apparel shall be worn.

All workers will be required to wear their safety steel toed shoes and hard hats with the bill facing forward. Ball caps, knit caps, or other headdress worn under the hard hat is prohibited unless approved by the hard hat manufacturer.

3.10 FORMS

See ATTACHMENTS following this section

-- End of Section --

FOR OFFICIAL USE ONLY

CRANE AND RIGGING GEAR ACCIDENT REPORT

Accident Category: ☐ Crane Accident ☐ Rigging Gear Accident

From: UIC:	To: Navy Crane Center Bldg 491 NNSY Portsmouth, VA 23709 Fax (757) 967-3808

Activity:			Report No:
Crane No:	Category:	Accident Date:	Time: hrs
Category of Service: ☐ SPS ☐ GPS		Crane Type:	Crane Manufacturer:
Was Crane/Rigging Gear Being Used in SPS? Yes ☐ No ☐		Was Crane/Rigging Gear Being Used in a Complex Lift/Critical non-crane rigging operation? Yes ☐ No ☐	
Location:		Weather:	
Crane Capacity:	Hook Capacity:	Weight of Load on Hook:	
Fatality or Permanent Disability? ☐ Yes ☐ No Reported to NAVSAFECEN? ☐ Yes ☐ No		Material/Property Cost Estimate:	

Accident Type:

☐ Personal Injury	☐ Overload	☐ Derail	☐ Damaged Rigging Gear
☐ Load Collision	☐ Two Blocked	☐ Dropped Load	☐ Damaged Crane
☐ Crane Collision	☐ Damaged Load	☐ Other Specify	

Cause of Accident:

☐ Improper Operation	☐ Equipment Failure	☐ Inadequate Visibility
☐ Improper Rigging	☐ Switch Alignment	☐ Inadequate Communication
☐ Track Condition	☐ Procedural Failure	☐ Other Specify

Chargeable to:

☐ Crane Walker	☐ Rigger	☐ Operator
☐ Maintenance	☐ Management/Supervision	☐ Other Specify

Crane Function:

☐ Travel ☐ Hoist ☐ Rotate ☐ Luffing ☐ Telescoping ☐ Other ☐ N/A

Is this accident indicative of a recurring problem? ☐ Yes ☐ No

If yes, list Accident Report Nos.:

ATTACH COMPLETE AND CONCISE SITUATION DESCRIPTION AND CORRECTIVE/PREVENTIVE ACTIONS TAKEN AS ENCLOSURE (1). Include probable cause and contributing factors. Assess damages and define responsibility. For equipment malfunction or failure, include specific description of the component and the resulting effect or problem caused by the malfunction or failure. List immediate and long term corrective/preventive actions assigned and respective codes.

Preparer:	Phone and email	Code	Date

Concurrences:

Prime contractor management	Print and sign	Code	Date
NAVFAC Project manager		Code	Date
FEAD/ROICC Officer		Code	Date
		Code PWO	Date
For concurrence and serialization		Code PW 7.4	Date

FOR OFFICIAL USE ONLY

APPENDIX P - CONTRACTOR CRANE (OR ALTERNATE MACHINE USED TO LIFT SUSPENDED LOAD) AND RIGGING GEAR REQUIREMENTS

DECEMBER 2009 VERSION

CERTIFICATE OF COMPLIANCE
コンプライアンス証書

This certificate shall be signed by an official of the company that provides cranes (or multi-purpose machines, material handling equipment, or construction equipment used to lift loads suspended by rigging gear) for any application under this contract. Post a completed certificate on each crane or alternate machine (or in the contractor's on-site office for rigging operations) brought onto Navy property.
本証明書は本契約の下、あらゆる目的のためにクレーン(又は玉掛け用具で荷物を吊上げる事に使用される多目的機器・フォークリフト・建設機器)を用意する会社の役員の署名を必要とする。記入済み証書を海軍施設内に持ち込む各クレーン又はクレーンに代わる機器(当該機器が関与しない玉掛けのみの作業については業者の現場事務所内)に掲示すること。

CONTRACTING OFFICER'S POINT OF CONTACT (Government Representative): 契約担当官の連絡先(アメリカ政府代表者):	PHONE : 電話番号:
PRIME CONTRACTOR / PHONE: 主契約業者/電話番号:	CONTRACT NUMBER : 契約番号:
LOCATION (To include building / pier number or specific information to identify work location. In case a contract involves multiple work locations, list all of them) 作業現場(建物/岸壁番号、もしくは作業現場を特定できる具体的な情報を記入。複数の場所で作業を行う場合は全ての現場名を記入)	CRANE/RIGGING OPERATION PERIOD クレーン/玉掛け作業期間 START DATE 開始日 / END DATE 終了日
CRANE OR ALTERNATE MACHINE SUPPLIER/PHONE (if different from prime contractor): クレーン又はクレーンに代わる機器の供給業者/電話番号(主契約業者と異なる場合):	CRANE OR ALTERNATE MACHINE NUMBER (i.e., ID number) : クレーン又はクレーンに代わる機器の番号 (例 識別番号等):
CRANE OR ALTERNATE MACHINE MANUFACTURER/TYPE/CAPACITY : クレーン又はクレーンに代わる機器の製造者/形式/容量:	
CRANE OR ALTERNATE MACHINE OPERATOR'S NAME (S) / LICENSE NUMBER : クレーン又はクレーンに代わる機器の運転士名(複数可) / 免許証番号:	

I certify that
私は下記を証明します。
1. The above noted crane or alternate machine and associated rigging gear conform to applicable OSHA regulations (host country regulations for naval activities in foreign countries) and applicable ASME B30 standards. The following OSHA regulations and ASME standards apply:_____
1.上記のクレーン又はクレーンに代わる機器および付属の玉掛け用具は該当するOSHA(アメリカ労働省労働安全保健局)の規則(アメリカ国外に駐留する海軍基地においては現地の法令および規則)および該当するASME B30規格に準拠している。
次のOSHA規則およびASME規格を適用する:_____
2. The operators noted above have been trained and are qualified for the operation of the above noted crane(s) or alternate machine(s).
2.上記の運転士は本記載のクレーン又はクレーンに代わる機器を運転する訓練を受け運転資格を所持している。
3. The operators noted above have been trained not to bypass safety devices during lifting operations.
3.上記の運転士はクレーン作業中に安全装置を解除しないよう教育を受けている。
4. The operators, riggers and company officials are aware of the actions required in the event of an accident as specified in the contract.
4.上記の運転士・玉掛け作業員・会社役員は当該契約中に規定する事故発生時の処置を承知している。

COMPANY OFFICIAL SIGNATURE : 会社役員の署名:	DATE : 日付:
COMPANY OFFICIAL NAME/TITLE : 会社役員の氏名/役職名:	

POST ON CRANE (OR ALTERNATE MACHINE) (IN CAB OR VEHICLE)
クレーン(又はクレーンに代わる機器)に掲示 (運転室または車両)
(or in the contractor's on-site office for rigging operations)
(当該機器が関与しない玉掛けのみの作業については業者の現場事務所内に掲示)

FIGURE P-1

P-1

CONTRACTOR CRANE OR RIGGING OPERATION CHECKLIST
契約業者クレーン及び玉掛け作業チェックリスト

		YES はい	NO いいえ
1	Is the Certificate of Compliance, P-1, in the operator's cab (or in the contractor's on-site office for rigging operations) with the current operator's name listed? 運転室内（玉掛け作業については業者の現場事務所内）に現在操作している運転士の名前が記載されたコンプライアンス証書（P-1）があるか？		
2	Is the crane/machine transited to and from the job site correctly? Are the OEM instructions for travel being followed? クレーン/機器は作業現場へ（から）正しく搬送されているか？製造メーカーの走行手順が順守されているか？		
3	Does the operator know the weight of the load to be lifted? 運転士は吊り上げる荷物の重量を知っているか？		
4	Is the load to be lifted within the crane/machine manufacturer's rated capacity in its present configuration? 荷物の重量は現在のクレーン/機器のセッティングにおいて製造メーカーの定める定格容量以内にあるか？		
5	Are outriggers or stabilizers required? アウトリガー又はスタビライザーは必要か？		
6	If outriggers are required, are outriggers fully extended and down, and the crane load off the wheels? アウトリガーが必要な場合、完全に張り出されて接地しているか？クレーンの車輪が地面から離れているか？		
7	If the crane/machine level and on firm ground, if the ground is not firm is the crane/machine blocked? クレーン/機器は水平で堅固な地面にあるか？もし地面が堅固でないならば、クレーン/機器に敷板が使用されているか？		
8	If blocking is required, is the entire surface of the outrigger pad supported and is the blocking material of sufficient strength to safely support the loaded outrigger pad? 敷板が必要な場合、アウトリガーパッドの全面が敷板によって支持されているか？十分な強度を持つ敷板が荷重が掛かったアウトリガーパッドを安全に支持しているか？		
9	If outriggers are not used, is the crane/machine rated for on-rubber lifts by the manufacturer's load chart? If stabilizers are used and not outriggers and the wheels are not off the ground is this the correct setup in accordance with the OEM? アウトリガーが使用されない場合、クレーン/機器は製造メーカーの荷重表でタイヤ接地状態による吊り上げが定められているか？アウトリガーが装備されていない機器でスタビライザーが使用され車輪が地面から離れていない場合、それは製造メーカーの手順に従う正しいセットアップか？		
10	Is the swing radius of the crane counterweight clear of people and obstructions and accessible areas within the swing area barricaded to prevent injury or damage? クレーンのカウンターウエイト旋回範囲内に人や障害物がないか？旋回範囲内の立ち入り可能な区域はケガや損傷を防止するためにバリケードでふさがれているか？		
11	Has the hook been centered over the load in such a manner to minimize swing? フックは荷振れを最小限にするために荷物の中心の真上に置かれているか？		
12	Is the load well secured and balanced in the sling or lifting device before it is lifted more than a few inches? 荷物が数インチ以上吊り上げられる前にスリングや吊具で十分に締められてバランスを取られているか？		
13	Is the lift and swing path clear of obstructions? 吊り上げ及び旋回経路に障害物がないか？		
14	If rotation of the load being lifted is hazardous, is a tag or restraint line being used? 吊り上げられている荷物の回転が危険な場合、タグライン（介錯ロープ）、引き綱が使用されているか？		
15	Are personnel prevented from standing or passing under a suspended load? 人員が吊荷の下に立つことや通行するのを防止されているか？		
16	Is the operator's attention diverted? 運転士の注意がそれているか？		
17	Are proper signals being used at all times? Is the operator responding properly to the signals? Are radios used for blind lifts? 常に適切な合図が使われているか？運転士は適切に合図に反応しているか？運転士から荷物が見えない吊上げ（ブラインドリフト）には無線機が使用されているか？		
18	Is the load lifted a few inches to ensure it is secure and balanced? 荷物が適切に締結されてバランス状態を確実にする為に地切り時に数インチ吊り上げられて確認されているか？		
19	Are empty hooks lashed or otherwise secured during travel to prevent swinging? 走行時の振れを防止する為に空のフックは紐等で固定されるか、もしくは別の方法で固定されているか？		
20	Does the operator remain at the controls while the load is suspended? 荷物が吊られている間、運転士は操作場所（操縦席）に留まっているか？		
21	Do the operations ensure that side loading is prohibited? 荷物の横引きが禁止されていることを徹底しているか？		
22	Are personnel prevented from riding on a load? 人員が荷物の上に乗ることを防止されているか？		
23	Are start and stop motions in a smooth fluid motion (no sudden acceleration or deceleration)? クレーン操作において始動と停止の動きはスムーズであるか？（急加速又は急減速は禁止）		
24	If operating near electric power lines, are the rules and guidelines understood and adhered to? 送電線付近での作業の場合、規則や指針が理解され順守されているか？		
25	Is the lift a critical lift? 実施する吊り上げ作業は危険度が高い作業か？		

FIGURE P-2 (1 of 2)

P-2

CONTRACTOR CRANE OR RIGGING OPERATION CHECKLIST
契約業者クレーン及び玉掛け作業チェックリスト

		YES はい	NO いいえ
26	If so, are all regulations understood and check-off sheets initialed and signed off? 上記の場合、全ての規則が理解されチェックシート(コンプレックス/クリティカルリフトプラン)にイニシャルと署名が記入されてあるか？		
26.1	Are any overhead power lines in the vicinity? 周囲に頭上の送電線があるか？		
26.2	If so, are complex lift rules and 1926.550(a)(15) being followed? 上記の場合、コンプレックスリフトの規則と1926.550(a)(15)が順守されているか？		
27	If pick and carry operations are allowed and performed, are OEM directions followed? (e.g. rotation lock engaged, boom centered over front or rear, etc.)? もしクレーン/機器の走行吊り作業が許可されていて実行される場合、製造メーカーの手順が順守されているか？ (例えば旋回ブレーキロックが掛けられる、ブームが前方もしくは後方の中心に来る様に合わせる、等)		
28	When the crane / machine is left unattended, is it in a safe condition? クレーン/機器は運転士が離れている時、安全な状態にあるか？		
29	Is rigging gear undamaged and acceptable for the application? 玉掛け用具は損傷なく使用用途に適しているか？		
30	Does rigging gear meet applicable ASME or host country standards(e.g. ASME B30.9 for slings, B30.10 for hooks, B30.26 for hardware such as shackles, safety hoist rings, eyebolts, etc, B30.20 for below the hook lifting devices, etc.)? 玉掛け用具は適用可能なASME、又は現地の法令及び規則を満たしているか？(例えばASME B30.9 スリング、B30.10 フック、B30.26 シャックル、安全吊上リング、アイボルト等の様な金属製品、B30.20 フック下の吊上装置、等)		
31	Is the rigging gear inspected prior to use? 玉掛け用具は使用前に検査されているか？		
32	Is chafing gear used to protect slings (especially synthetic slings) and equipment from damage due to sharp corners and edges? スリング(特に繊維スリング)や器具を鋭い角や端部の損傷から保護するために当て物用具が使用されているか？		
33	Is the rigging gear used in accordance with its working load limit? Is the load limit visible? 玉掛け用具はその作業制限荷重に従って使用されているか？その制限荷重は明白に表示されているか？		
34	Are positive latching devices used on crane and rigging hooks, or are the hooks "moused"? クレーンと玉掛け用具のフックに確実な掛け金装置が使用されているか？又はフックの開口部が他の方法で閉じられているか？		

Contractor : 契約業者名：	Subcontractor : 下請け業者名：
Location (To include building / pier number or specific information to identify work location) : 作業現場(建物/岸壁番号、もしくは作業現場を特定できる具体的な情報を記入)	
Notes : 注記：	
Signature of Contracting Officer's Representative : 契約担当官の代表者の署名：	Date : 日付:

FIGURE P-2 (2 of 2)

CONTRACTOR CRANE OPERATOR'S DAILY CHECKLIST
契約業者クレーン日常点検表

	Check Items 確認項目	YES はい	NO いいえ
1	Is the Certification of Compliance, P-1, in the operator's cab with the current operator's name listed? 運転室内のコンプライアンス証書には最新の運転者名が記載されてあるか?		
2	Does the operator know the weight of the load to be lifted? 運転士は吊り上げる品物の重量を把握しているか?		
3	Is the load to be lifted on the plan within the crane manufacturer's rated capacity in its present configuration? 作業計画での吊荷の重量は、現状のクレーン構成においてクレーン製造者の定める定格容量の範囲内であるか?		
4	Is the crane level and on firm ground? クレーンは水平で堅固な地面に設置されているか?		
5	Are outriggers required? アウトリガーは必要か?		
6	If so, are outriggers fully extended and down, and the crane load off the wheels? アウトリガーが必要な場合、完全に張り出されて接地しているか。クレーンのタイヤが地面から浮いているか?		
7	Is Outrigger block the entire surface of the outrigger pad supported and is the blocking material of sufficient strength to safely support the loaded outrigger pad? 敷板は、アウトリガーパッド全面が受けられているか? 敷板の材質の強度は、荷重が加わったアウトリガーパッドを安全に支えられるか?		
8	If outriggers are not used, is the crane rated for on-rubber lifts by the manufacturer's load chart? アウトリガーを使用しない場合、当該クレーンはクレーン製造者の定格総荷重表にタイヤ接地状態での吊り上げが定められているか?		
9	Is the swing radius of the crane counterweight clear of people and obstructions and accessible areas within the swing area barricaded to prevent injury or damage? クレーンのカウンターウエイト旋回範囲内に人や障害物がないか。旋回範囲内への立ち入り可能な区域は、ケガや損傷を防止するために閉鎖されているか?		
10	Is the lift and swing path clear of obstructions? 吊り上げ、及び旋回経路に障害物はないか?		
11	Are personnel prevented from standing or passing under a suspended load? 吊荷の下に立つ、又は通行が出来ないよう安全対策が施されているか?		
12	If operating near electric power lines, are the rules and guidelines understood and adhered to? 送配電線付近で作業する場合、規則や指針を理解し順守しているか?		
13	Is the lift a critical lift? クレーン作業は危険度の高い(または重要な)作業であるか?		
14	If so, are all regulations understood and check-off sheets initialed and signed off? 上記の場合、全ての規則が周知されてチェックシートにイニシャルと署名が記入されてあるか?		
15	Is rigging gear undamaged and acceptable for the application? 玉掛け用具に損傷が無く、使用用途に適したものか?		
	I certify obeying about the following check items during crane operation. 私はクレーン作業の間、以下の確認項目に付いて遵守する事を証明します。		
16	To ensure that the hook is set at center of the load for minimizing swing. フックは荷振れを最小限にするために吊荷の中心にセットされていることを確実にすること。		
17	To confirm whether the load will be being secured and balanced well before lifting more than a few inches. 数インチ以上吊り上げる前に、吊荷は固縛されており、又バランスが保たれているかどうか確認すること。		
18	To use a tag line, If rotation of the load being lifted is hazardous. 吊り上げ中の荷が回転して危険な場合、誘導ロープを使用すること。		
19	To pay attention always, while the crane operator is controlling the crane. クレーン運転者がクレーンを操作している間、常に注意を払うこと。		
20	To ensure that proper signals are used at all times. 適切な合図が常に使われることを確実にすること。		
21	To ensure that side loading is prohibited at crane operation. 吊荷の横引きが禁じられていることを確実にすること。		
22	To prevent that a personnel ride on a load. 人が吊荷の上に乗ることを禁止すること。		
23	To ensure that the start and stop of crane operation is performed smoothly (no sudden acceleration or deceleration). クレーン作業の始動と停止がスムーズに行われる事を徹底すること。(急加速または急減速は禁止)?		

チェック実施者名(ローマ字):	所属会社名(ローマ字):	Date日付:

Location (To include the building number, pier number, etcetera location's information)
作業現場 (建物/岸壁番号、もしくは作業現場を特定できる具体的な情報を記入):

Notes 注記:

現場責任者署名(ローマ字):	所属会社名(ローマ字):	Date日付:

CATEGORY 2 & 3 NON CAB OPERATED CRANE OPERATOR'S PRE-USE / MONTHLY CHECKLIST
カテゴリー ２＆３運転室無しクレーン 始業前／月例点検表

CRANE NO. クレーン番号	TYPE/CAPACITY 形式/容量	LOCATION 場所	CERTIFICATION EXPIRATION DATE 使用許可認証有効期限	SHOP / CODE ショップ／コード	DATE 日付

OPERATORS 運転士

LEGEND 凡例
S = SATISFACTORY 良　U = UNSATISFACTORY 不良　NA = NOT APPLICABLE 適用外

	1 WALK AROUND CHECK 見回り点検	S	U	NA		2 MACHINERY HOUSE 機械室点検	S	U	NA		3 OPERATIONAL TEST 操作点検	S	U	NA
a	Safety Guards and Plates 安全ガードとプレート				a	House Keeping 清掃状態				a	* Area Safety 周囲の安全性			
b	General hardware 外観				b	Leaks 漏れ				b	I Unusual Noises 異常音			
c	Wire Rope * ワイヤロープ				c	Lubrication 潤滑				c	Control Action * 制御動作			
d	Reeving * ワイヤロープの巻きかけ状態				d	Clutch and Brakes * クラッチとブレーキ				d	Wire rope/ chain * ワイヤーロープ/チェーン			
e	Block/Blocks * ブロック				e	Electric Motors * 電動機				e	Brakes * ブレーキ			
f	Hook /Hooks * フック				f	Danger/Caution Tags * 危険/警告札				f	Limit Switch * リミットスイッチ			
g	Sheaves * シーブ				g	Hoist Drum Pawl/ratchet Locks ホイストドラムの爪/ラチェットロック				g	Emergency shut off * 緊急停止装置			
h	Rail / Bumpers stop レール、バンパー止め				h	Certification tag * 認証札				h	General Safety Devices 一般安全装置）			
i	Leaks 漏れ				i	Warning / Indicator lights * 警告灯／表示灯								
j	Load chain on chain hoist * チェーンホイストのロードチェーン													
k	Area Safety * 周囲の安全性													

INSTRUCTIONS（記入方法）– Check all applicable items indicated, each shift. Suspend all operations immediately when observing an unsatisfactory condition of any item indicated with an asterisk (*) unless the condition has been reviewed and continued operation has been authorized by the activity engineering organization. In addition, suspend operation when any unsafe condition is observed and immediately notify supervisor. For any unsatisfactory item, identify the specific component and describe the deficiency in the "REMARKS" block.
始業毎に上記の該当する項目をすべて点検すること。星印 (*) がついた項目に不具合を見つけた場合には、ただちにクレーンの使用を中止すること。所属部隊の技術部門が不具合状態を点検して使用継続が認められない限り、クレーンを使用してはならない。また、不安全状態を発見した場合にはクレーンの使用を中止して、ただちに監督者に報告すること。不良が見つかった個所の部品名を具体的に示し、不具合の状態を備考欄に記入すること。

OPERATOR'S SIGNATURE 運転士署名

DATE 日付

REMARKS 備考

SUPERVISOR'S SIGNATURE 監督者署名

DATE 日付

CATEGORY 1, 2, 4 AND CAB OPEATED CATEGORY 3 CRANE OPERATOR'S DAILY CHECKLIST
カテゴリー１，２，４と運転室付きカテゴリー＆３クレーン日常点検表

CRANE NO. クレーン番号	TYPE/CAPACITY 形式/容量	LOCATION 場所	CERTIFICATION EXPIRATION DATE 使用許可認証有効期限	SHIFT 勤務形態	HOUR METER アワーメーター START	HOUR METER アワーメーター STOP	HRS OPERATED 運転時間	DATE 日付
				1 2 3				

OPERATORS 運転士

LEGEND 凡例
S = SATISFACTORY 良　U = UNSATISFACTORY 不良　NA = NOT APPLICABLE 適用外

	1 WALK AROUND CHECK 見回り点検	S	U	NA
a	Safety Guards and Plates 安全ガードとプレート			
b	Carrier Frame and Rotate Base * キャリアフレーム・旋回ベース			
c	General Hardware 締め付け具（ボルト・ナット等）			
d	Wire Rope * ワイヤロープ			
e	Reeving * ワイヤロープの巻きかけ状態			
f	Block * ブロック			
g	Hook * フック			
h	Sheaves * シーブ			
i	Boom and Jib * ブームとジブ			
j	Gantry, Pendants and Boom Stops * ガントリ・ペンダント・ブームストップ			
k	Walkways, Ladders and Handrails 通路・はしご・手すり			
l	Wind locks and Boom Stops 旋回ロック・ブームストップ			
m	Tires/Wheel /Tracks タイヤ・ホイール・走行台車			
n	Leaks 漏れ			
o	Outriggers/Stabilizers and Locking Devices * アウトリガー・安定装置・固定装置			
p	Area Safety * 周囲の安全性			

	2 MACHINERY HOUSE 機械室点検	S	U	NA
a	House Keeping 清掃状態			
b	Diesel Engine * ディーゼルエンジンと発電機			
c	Leaks 漏れ			
d	Lubrication 潤滑			
e	Battery バッテリー			
f	Lights 照明			
g	Glass ガラス			
h	Clutch and Brakes * クラッチとブレーキ			
i	Electric Motors * 電動機			
j	Compressor 補助エンジンとコンプレッサー			
k	Danger/Caution Tags * 危険/警告札			
l	Fire Extinguishers 消火器			
m	Hoist Drum Pawl/ratchet Locks * ホイストドラムの爪/ラチェットロック			

	3 OPERATOR CAB CHECK 運転室点検	S	U	NA
a	Gauges 計器類			
b	Indicator and Warning Lights/Bells 指示灯・警告灯・警鐘			
c	Visibility * 視界			
d	Load Rating Charts * 定格荷重表			
e	List/Trim Indicator (Floating Cranes) * リスト/トリム計（浮きクレーン）			
f	Boom Angle/Radius Indicator * ブーム角度/半径計			
g	Fire Extinguishers 消火器			
h	Level Indicator (Mobile Cranes) * 水準器（移動式クレーン）			
i	Danger/Caution Tags * 危険/警告札			

	4 PRE LIFT OPERATIONAL TEST 操作点検	S	U	NA
a	Area Safety 周囲の安全性 *			
b	Outriggers and Stabilizers * アウトリガー・安定装置			
c	Unusual Noises 異常音			
d	Operation * 操作			
e	Wire rope/chain * ワイヤーロープ/チェーン			
f	Control Action * 制御動作			
g	Brakes * ブレーキ			
h	Boom Angle/Radius Indicator * ブーム角度/半径計			
i	Limit Switch * リミットスイッチ			
j	Emergency Stop * 緊急停止装置			
k	Other Operational Safety Devices * 運転安全操作装置類			
l	General Safety Devices 一般安全装置			
m	Fleeting Sheaves フリーディングシーブ (動滑車)			
n	Wind speed within the limit 運転規制値内を超える風速か			

INSTRUCTIONS（記入方法）– Check all applicable items indicated, each shift. Suspend all operations immediately when observing an unsatisfactory condition of any item indicated with an asterisk (*) unless the condition has been reviewed and continued operation has been authorized by the activity engineering organization. In addition, suspend operation when any unsafe condition is observed and immediately notify supervisor. For any unsatisfactory item, identify the specific component and describe the deficiency in the "REMARKS" block.
始業毎に上記に該当する項目について点検を行うこと。星印 (*) のついた項目に不具合を見つけた場合には、ただちにクレーンの使用を中止すること。所属部隊の技術部門が不具合状態を点検して使用継続が認められない限り、クレーンを使用してはならない。また、不安全状態を発見した場合にはクレーンの使用を中止して、ただちに監督者に報告すること。不良が見つかった個所の部品名を具体的に示し、不具合の状態を備考欄に記入すること。

SUPERVISOR'S SIGNATURE 監督者署名

DATE 日付

FIRST OPERATOR'S SIGNATUR 最初の運転士署名	OPERATOR'S SIGNATURE 運転士署名	OPERATOR'S SIGNATURE 運転士署名	OPERATOR'S SIGNATURE 運転士署名	Wind Velocity (m/s) /Time monitored 風速 (m/s)・計測時
DATE 日付	DATE 日付	DATE 日付	DATE 日付	

REMARKS 備考

COLOR:
LETTERS: A07-40X ＊(RED)
BACKGROND: AN-95 ＊(WHITE)

＊Color sample number of JPCA or JPMA

— (NAME OF CONTRACTOR)
— (ADDRESS OF CONTRACTOR)
— (TELEPHONE NO. OF CONTRACTOR)

FIG. 1 **SIGN-BOARD ON SCAFFOLDING**

Activity Hazard Analysis (AHA)

Activity/Work Task:	Overall Risk Assessment Code (RAC) (Use highest code)
Project Location:	**Risk Assessment Code (RAC) Matrix**
Contract Number:	
Date Prepared:	
Prepared by (Name/Title):	
Reviewed by (Name/Title):	
Notes: (Field Notes, Review Comments, etc.)	

Severity	Probability				
	Frequent	Likely	Occasional	Seldom	Unlikely
Catastrophic	E	E	H	H	M
Critical	E	H	H	M	L
Marginal	H	M	M	L	L
Negligible	M	L	L	L	L

Step 1: Review each **"Hazard"** with identified safety **"Controls"** and determine RAC (See above)

"Probability" is the likelihood to cause an incident, near miss, or accident and identified as: Frequent, Likely, Occasional, Seldom or Unlikely.

"Severity" is the outcome/degree if an incident, near miss, or accident did occur and identified as: Catastrophic, Critical, Marginal, or Negligible

Step 2: Identify the RAC (Probability/Severity) as E, H, M, or L for each "Hazard" on AHA. Annotate the overall highest RAC at the top of AHA.

RAC Chart

- E = Extremely High Risk
- H = High Risk
- M = Moderate Risk
- L = Low Risk

Job Steps	Hazards	Controls	RAC

Inspection Requirements	
Training Requirements/Competent or Qualified Personnel name(s)	
Equipment to be Used	

DEPARTMENT OF THE NAVY
NAVAL FACILITIES ENGINEERING COMMAND FAR EAST
PSC 473 BOX 13
FPO AP 96349-0013

5100
Ser 09SF/ 0159
13 Apr 10

From: Commanding Officer, Naval Facilities Engineering Command Far East
To: Distribution

Subj: ELECTRICAL SAFETY

Ref: (a) Electrical Safety Field Guide, OPNAV P-45-117-6-98, dated 30 Jun 98
(b) Electrical SAFE SOP/JSA PWBL 003, Working On or Near Exposed and Enclosed Energized Electrical Systems
(c) Safety and Health Requirements Manual, EM 385-1-1, Section 11, dated 15 Sep 08
(d) Electrical SAFE SOP/JSA PWBL 004, Measuring/Testing Parameters of Energized Electrical Systems (High and Low Voltage)

Encl: (1) NAVFAC Far East Energized Electrical Work Permit

1. References (a), (b) and (c) establish minimum standards to prevent hazardous electrical exposures to personnel and ensure compliance with regulatory requirements applicable to electrical systems. Working on electrical equipment in a de-energized state is **required** unless de-energizing introduces an increased hazard or is infeasible. When energized electrical work is to be performed due to aforementioned reasons, it shall be conducted by qualified electrical workers, who are trained and provided with the appropriate safe work procedures, protective equipment and other necessary controls. All energized work **REQUIRES MY PERSONAL APPROVAL** utilizing the work permit provided as enclosure (1) for both in-house workforce and contractor employees. This work permit is to be submitted by PWOs/ROICCs to my attention via the Operations Officer. There will be no energized electrical work performed unless the work permits are approved. The only exception to this requirement is when measuring and/or testing electrical parameters is performed per reference (d).

2. When work is to be conducted within ten feet of exposed energized electrical systems, I expect everyone to apply the Operational Risk Management (ORM) process to determine the degree of potential risks involved. If personnel are at risk as a result of the hazard assessment, the work permit system will apply.

3. We have the responsibility to comply with the established standards and policy in meeting this requirement in addition to any local installation requirements. I solicit your support to help create and sustain a safe work environment for our personnel.

R. A. MCLEAN

NAVFAC FAR EAST
Energized Electrical Work Permit

Part I: Request for Special Permiss **MAXIMO W/O #/Contract #/Task Order** _____

1. Description of circuit/equipment:						
2. Job Location:						
3. Description of work to be done:						
4. Justification of why the circuit/equipment cannot be de-energized:						
5. Anticipated Duration of Work Requiring Special Permission:	(hours/minutes)		On (date)			
6. Means Employed to Restrict Access of Unqualified Persons:						
7. Voltage:						
8. Approach Boundaries: (distance)	Limited	Restricted	Prohibited	Flash		
9. Description of work practices to be followed:						
10. PPE to be used: (in addition to required daily wear)	Leather Gloves				Y	N
	Voltage Rated Rubber Gloves with Leather Protectors				Y	N
	Safety Glasses				Y	N
	Arc Flash Face Shield rated 10-cal/cm sq or more				Y	N
	Arc Flash Hood rated 20 cal/cm sq or more				Y	N
	Hard Hat				Y	N
	Balaclava (Head Sock)				Y	N
	Hearing Protection (single level)				Y	N
	Voltage Rated Tools				Y	N
	Hazard Risk 3 Clothing				Y	N
Source of Lighting:	Outside Daylight	Inside Existing Artificial	Temporary Portable Lighting		(AC)	Battery

Name of Employee(s) Assigned to Job: _____

Requested by _____ Date _____

PWO/ROICC _____ Activity _____ Date _____

Part II: Approval

Reviewed by: _____ Date _____
NAVFAC Far East Operations Officer

Approved by: _____ Date _____
NAVFAC Far East Commanding Officer

Enclosure (/)

NAVFAC INITIAL MISHAP NOTIFICATION

☐ Navy Civilian Employee ☐ Contract Employee ☐ Military

1) Name of activity and exact location where mishap occurred:

2) Type of work being performed:

3) Date and Time of Mishap:

4) If contractor mishap - also identify Contractor name and type of contract:

5) Name of injured person, if known:

6) Brief description of mishap, including extent of injuries:

7) Extent of property damage if applicable:

8) Corrective action taken at initial notification and indicate if and when follow up information will be provided:

9) Safety investigator assigned if known at this time:

10) Employee immediate supervisor or responsible person:

11) A summary of initial lessons learned:

12) Mishap Review Board anticipated date:

◯ Initial Report
◯ Follow-up Report
◯ Final Report
Date _____/_____/_____

Contractor Incident Report System (CIRS)

1. Contract Information	Incident Information
Prime Contractor:	**Cage Code:**
Contract Number:	**Installation of Incident:**
Task Order #:	**Contracting Activity/ROICC Office:**

Contractor Contact Information	
Name (Last, First):	**Phone #:**
Email Address:	**Date Notified:**

2. Incident Type (Please Check/Bold All That Apply)

☐ Assault/Violent Act	☐ Extreme Environmental Exposure	☐ Man over the side (No water entry)
☐ Diving	☐ Falls, slip, trip, or bodily exertion	☐ Man Overboard - Water Entry
☐ Electrical Shock/Burns	☐ Fires - All Types	☐ Material Handling Equipment
☐ Equipment Installation/Repair	☐ Hazardous Material (any type)	☐ Ordnance-Related (Explosive)
☐ Explosion, Non-Ordnance	☐ **Industrial (Select Additional Below)**	☐ Vehicle (Government or Private)

Industrial Incident Additional Information (Please Check/Bold All That Apply)

☐ Confined Space	☐ Hand and Power Tools	☐ Work Platforms and Scaffolding
☐ Demolition/Renovation	☐ Rigging	☐ Underground Construction, Shafts, and Caissons
☐ Trenching/Entrapment	☐ Cranes and Hoisting Equipment	☐ Concrete, Masonry, Steel Erection and Residential Construction
☐ Traffic Control	☐ Floating Plant and Marine Activities	☐ Tree Maintenance and Removal
☐ Welding and Cutting	☐ Pressurized Equipment and System	☐ Airfield and Aircraft Operations
☐ Control of Hazardous Energy	☐ Fall Protection	

3. General Information	Incident Information
Date of Accident:	**Time of Accident:**

Describe the accident in detail in your words: *(Use the back of page if you need additional space)*

Exact Location of Accident:

Were Hazardous Material(s) Involved ☐ Yes ☐ No

If Yes, Explain What Hazardous Materials Were Involved and Why:

Who Provided Clean-up? ☐ Onsite ☐ Base ☐ Public

Activity of the injured person at the time of incident:

Personal Protective Equipment: (Check/Bold Response)

☐ Available and used ☐ Available and not used ☐ Not Required

☐ Not related to Mishap ☐ Wrong PPE for job

List PPE Used:

4. Fully Explain What Allowed or Caused the Incident:	Incident Information
Direct Cause:	
Indirect Cause:	
Additional Action Taken: (Please Include a Begin Date and Est. End Date in Description)	
Additional Action Taken: (Please Include a Begin Date and Est. End Date in Description) *(Use the back of page if you need additional space)*	

5. Contributing Factors:

Was Visibility Restricted? ☐ Yes ☐ No	**Distance Visibility was restricted:**
Unit of Measure (Check/Bold): ☐ Feet ☐ Yards ☐ Meters ☐ Miles ☐ Nautical Miles	
Visibility Restricted By: (Check/Bold all that apply)	
☐ Fog ☐ Smoke ☐ Rain ☐ Sleet ☐ Snow	
☐ Mist ☐ Dust ☐ Sandstorm ☐ Unknown Object ☐ Other:	

Lighting Conditions at Site of Mishap:	Was Noise Level a Factor:	Was Carbon Monoxide (CO) a Factor:(Please Check)
(Please Check)	(Please Check)	☐ Yes ☐ No
☐ Adequate ☐ Inadequate ☐ Unknown	☐ Yes ☐ No ☐ Unknown	**If Yes CO Alarm Manufacturer:**

5. Contributing Factors: Continued	Incident Information
Other Contributing Factors:	

6. Attached Documents

Attached Documents/Files Name/Description:	Date Added:	Uploaded By:

1. Injured Data (if applicable) Person

Age:	Gender: (Check/Bold) ☐ Male ☐ Female	Prime Contractor Company Name:	Subcontractor Company Name:

2. General Information

Drug or Alcohol Involved: (Check/Bold all that apply)

☐ None ☐ Unknown ☐ Alcohol ☐ Drugs ☐ Alcohol and Drugs

Who Provided First Aid? ☐ Onsite ☐ Base ☐ Public

Was Ergonomics a Factor: (Check/Bold) ☐ Yes ☐ No

Type of Ergonomic Injury: (Check/Bold All That Apply)

☐ Lifting ☐ Positioning ☐ Bending ☐ Equipment Placement Office
☐ Equipment Placement Industrial ☐ Repetitive Motion ☐ Impact Strain

3. Injury Illness/Fatality Information

Severity of Injury/Illness: (Check/Bold)

☐ Fatality
☐ Lost Workday Case Involving Days Away From Work
☐ Temporary Disability
☐ Recordable Workday Case Involving Restricted Duty
☐ Permanent Total Disability
☐ Other Recordable Case
☐ Recordable First Aid Case
☐ Permanent Partial Disability
☐ Non-Recordable Case
☐ No Injury

Where There Days Lost: (Check/Bold) ☐ Yes ☐ No	Where There Days Hospitalized: (Check/Bold) ☐ Yes ☐ No	Where There Days Restricted Duty: (Check/Bold) ☐ Yes ☐ No

Part of Body Affected:

Nature of Injury or Illness:

Event or Exposure:

Source of Injury or Illness:

General Location Description:

Injury Activity Code:

4. License

(if applicable) **Person #**

Are Appropriate License and Certification/Medical Current: (Check/Bold) ☐ Yes ☐ No

Describe or Explain:

Attach Image of License or Certification Name/Description:	Date Added:	Uploaded By:

5. Training

Was all the contract-required training provided to the employee: (Check/Bold) ☐ Yes ☐ No

Explain:

6. Attached Documents

Attached Documents Name/Description:	Date Added:	Uploaded By:

1. Involved Person Data			(if applicable) Property Damage
Age:	Gender: ☐ Male ☐ Female	Contractor:	Contractor:

2. Attached Documents

Attached Documents Name/Description:	Date Added:	Uploaded By:

3. Property Damaged

Was Anyone Injured: ☐ Yes ☐ No

Was A Government Motor Vehicle Involved: ☐ Yes ☐ No

Property Type	Property ID #	Detailed Description	Property Owned By	Estimated Cost USD	Lost Use Days

4. License (if applicable) **Property Damage**		
Are Appropriate License and Certification/Medical Current: (Check/Bold) ☐ Yes ☐ No **Describe or Explain:**		
Attach Image of License or Certification Name/Description:	**Date Added:**	**Uploaded By:**

5. Training
Was all the contract-required training provided to the employee? (Check/Bold) ☐ Yes ☐ No **Explain:**

CONTRACTOR INCIDENT REPORT SYSTEM (CIRS) INSTRUCTIONS
Complete Only Sections Appropriate to Incident (Rev. 03/11).

NOTE: THE ATTACHED CIRS FORM IS TO BE USED BY CONTRACTORS TO RECORD THE RESULTS OF THEIR ACCIDENT/INCIDENTS INVESTIGATIONS AND SHALL BE PROVIDED TO THE CONTRACTING OFFICER WITHIN THE REQUIRED TIMEFRAMES.

GENERAL. Complete a separate report for each person who was injured in the accident pages 5-6. A report needs to be completed for all OSHA recordable accidents and property damage cases. Please type or print legibly. Appropriate items shall be Checkd/Bolded, non-applicable sections shall be marked "N/A". If additional space is needed, provide the information on a separate sheet of paper and attach to the completed form.

Mark the report: (Check/Bold)
Initial: If this form is being used as initial notification of a Fatality or High Visibility Mishap. The initial form is due within 4 hours of a serious accident. A form marked 'Follow-up' or 'Final' is required within 5 days.

Follow-Up: If you are providing additional information on a report previously submitted.

Final: If you are providing a completed report and expect no changes.

Incident Information

Section 1 Contract Information – Incident Information
Prime Contractor: Name as it appears on contract documents.

Cage Code: If known.

Contract Number: Number as it appears on the contract documents.

Installation: Name of installation where incident occurred.

Task Order #: Insert number if applicable.

Contracting Activity/ROICC Office: Enter the name and address of the Contracting Office administering the contract under which the mishap took place (e.g. ROICC MCBH, ROICC NORFOLK, PWC GUAM, etc.).
Contractor Contact Information: (Contractor point of contact information for the individual responsible for completing the form) Self Explanatory

Section 2 Incident Type: Check/Bold most applicable category, if you select Industrial you must Check/Bold at least one additional category from the **Industrial Incident Additional Information Section**.

Section 3 General Information Incident Information
Date of Accident: Enter the month, day, and year of accident.

Time of Accident: Enter the local time of accident in military time. Example: 14:30 hrs (not 2:30 p.m.).

Describe the Accident in Detail in your words: Fully describe the accident in the space provided. If property damage involved, give estimated dollar amount of damage and/or repair costs involved. If additional space is needed continue on a separate sheet and attach to this report. Give the sequence of events that describe what happened leading up to and including the accident. Fully identify personnel and equipment involved and their role(s) in the accident. Ensure that relationships between personnel and equipment are clearly specified. Ensure questions below regarding direct cause(s), indirect cause(s), and actions taken are answered. **NOTE!** Review questions in Section 4 (Fully Explain What Allowed or Caused the Incident - Incident Information) below before completing.

Exact Location of Accident: Enter facts needed to locate the accident scene (e.g. installation/project name, building/room number, street, direction and distance from closest landmark, etc.).

Were Hazardous Material(s) Involved Yes No

If Yes, Explain What Hazardous Materials Were Involved and Why: Check or Bold appropriate block and list name(s) and quantities of hazardous materials spilled/released during the mishap. List why the hazardous chemicals were being used.

Activity at the time of incident: What type of work/task was being performed by the injured when the injury took place or property damage occurred.

Personal Protective Equipment– Check/Bold appropriate items and list PPE which was being used by the injured person at the time of the accident (e.g. protective clothing, shoes, glasses, goggles, respirator, safety belt, harness, etc.)

Section 4 Fully Explain What Allowed or Caused the Incident - Incident Information
Direct Cause(s): The direct cause is that single factor which most directly lead to the accident. See examples below.

Indirect Cause(s): Indirect cause are those factors, which contributed to, but did not directly initiate the occurrence of the accident.

Examples for Direct and Indirect Cause:
1. Employee was dismantling scaffold and fell 12 feet from unguarded opening.
Direct cause: Failure to provide fall protection at elevation
Indirect causes: Failure to enforce safety requirements: improper training/motivation of employee (possibility that employee was not knowledgeable of fall protection requirements or was lax in his attitude toward safety); failure to ensure provision of positive fall protection whenever elevated; failure to address fall protection during scaffold dismantling in phase hazard analysis.

2. Private citizen had stopped his vehicle at intersection for red light when vehicle was struck in rear by contractor vehicle. (note contractor vehicles was in proper safe working condition.)
Direct cause: Failure of contractor driver to maintain control of and stop contractor vehicle within safe distance.
Indirect cause: Failure of employee to pay attention to driving (defensive driving).

Additional Action Taken: Fully describe all the actions taken, anticipated, and recommended to eliminate the cause(s) and prevent reoccurrence of similar accidents/illnesses. Continue in the additional box and or on additional sheets of paper if necessary to fully explain and attach to the completed report form.

Please Include a Begin Date and Estimated Completion Date in Description
(1) Begin: Enter the date when the corrective action(s) identified above will begin.
(2) Est. End Date - Enter the date when the corrective action(s) identified above will be completed.

Section 5 Contributing Factors Incident Information: Check/Bold appropriate items fill in information where required
Other Contributing Factors: Describe in detail any additional contributing factors not listed in previous information provided.

Section 6 Attached Documents: Provide the appropriate information for each document/file attached or uploaded.

Injured Data Person

Complete Pages 5 and 6 for each injured person At the upper right hand corner of page 5 and 6 differentiate between each person by using a numerical value (e.g. Person #1, Person #, Person #3, etc.)
Section 1 Injured Data: Fill in all applicable information, Check/bold appropriate responses.

Section 2 General Information:
Check/bold appropriate responses

Section 3 Injury/Illness Fatality Information: Check/bold appropriate responses
Part of Body Affected: Enter the most appropriate primary and when applicable, secondary, etc. body part(s) affected (e.g. arm: wrist: abdomen: single eye; jaw: both elbows: second finger: great toe: collar bone: kidney, etc.).

Nature of Injury/Illness: Describes the manner in which the injury or illness was inflicted or produced. It attempts to answer the broad question of "how" work injuries and illnesses occurred. (e.g. Fall, Struck By, Caught By, Repetitive Motion, Rubbed or Abraded By, etc.)

Event or Exposure: Describes what was produced by the injury or illness was produced or inflicted. (e.g. Infectious Parasitic Diseases, Traumatic Injuries and Disorders, Open Wounds, Burns, Intracranial Injuries, etc.)

Source of Injury Illness: Identifies the object, substance, bodily motion, or exposure, which directly produced or inflicted the previously identified injury or illness. (e.g. Acids, Chemical Products, Furniture and Fixtures, Machinery, Structures and Surfaces, Tools Instruments and Equipment, etc.)

General Location Description: Describes where the injury occurred (e.g. Industrial Facilities, Operational Industrial Building Plant , Roadway, etc.)

Injury Activity Code: Describes what the injured person was doing when the injury occurred. (e.g. Operating Type of Equipment, Construction Activity Being Performed, Industrial Operation Being Conducted, etc.)

Section 4 License:
Are Appropriate License and Certification/Medical Current: Did the injured employee have the appropriate license/certification or medical evaluations completed to conduct the work/task being performed.

Describe/Explain: Describe the required (licensing/certification/medical evaluation) for job/task being performed, date when license was issued, and expiration date. (e.g. "Powdered Actuated Tools, Hilti DX-350, License issued 11/29/2011, expires 3-years from issue date." "Respirator Semi Annual Medical Evaluation, conducted 12/30/2011, expires on 12/30/2013", etc.)

Attach Image of License or Certification: Self-Explanatory

Section 5 Training:
Was all the contract-required training provided to the employee: Self-Explanatory

Explain: If no, to the previous questions explain why the employee was not trained.

Section 6 Attached Documents:
Self-Explanatory use this for photos, drawings, diagrams, or other relevant documents.

Property Damage

Section 1 Involved Person Data: Fill in all applicable information, Check/bold appropriate responses.

Section 2 Attached Documents:
Self-Explanatory use this for photos, drawings, diagrams, or other relevant documents.

Section 3 Property Damaged:
Check/bold appropriate responses. Other Headings Self-Explanatory.

Section 4 License:
Are Appropriate License and Certification/Medical Current: Did the equipment operator have the appropriate license/certification or medical evaluations completed to conduct the work/task being performed.

Describe/Explain: Describe the required (licensing/certification/medical evaluation) for job/task being performed, date when license was issued, and expiration date. (e.g. "State Issued Driver, License issued 11/29/2011, expires on MM/DD/YYY)" "Scissor Lift, JLG Model 260MRT conducted 12/30/2011, does not expire.")

Attach Image of License or Certification: Self-Explanatory

Section 5 Training:
Was all the contract-required training provided to the employee: Self-Explanatory

SECTION 01 45 00.00 33

QUALITY CONTROL

PART 1 GENERAL

1.1 REFERENCES

The publications listed below form a part of this specification to the extent referenced. The publications are referred to in the text by the basic designation only. The latest version of the publication at time of award shall be used.

JAPANESE SCIENCE AND TECHNOLOGY AGENCY PUBLICATION

List of Testing Laboratories(Zen-koku Shiken Kenkyu Kikan Meikan)

AMERICAN SOCIETY OF HEATING, REFRIGERATING AND AIR-CONDITIONING ENGINEERS (ASHRAE)

ASHRAE 52.2	Method of Testing General Ventilation Air-Cleaning Devices for Removal Efficiency by Particle Size

ASTM INTERNATIONAL (ASTM)

ASTM D 6245	Using Indoor Carbon Dioxide Concentrations to Evaluate Indoor Air Quality and Ventilation
ASTM D 6345	Selection of Methods for Active, Integrative Sampling of Volatile Organic Compounds in Air

SHEET METAL AND AIR CONDITIONING CONTRACTORS' NATIONAL ASSOCIATION (SMACNA)

SMACNA 008	IAQ Guidance for Occupied Buildings Under Construction

U.S. ARMY CORPS OF ENGINEERS (USACE)

EM 385-1-1	(2014) Safety -- Safety and Health Requirements

1.2 SUBMITTALS

Government approval is required for submittals with a "G" designation; submittals not having a "G" designation are for Contractor Quality Control approval. When used, a designation following the "G" designation identifies the office that will review the submittal for the Government. Submit the following in accordance with Section 01 33 00.00 33 SUBMITTAL PROCEDURES:

SD-01 Preconstruction Submittals

Submit a Construction QC Plan prior to start of construction.

Construction Quality Control (QC) Plan; G (FEAD)

1.3 INFORMATION FOR THE CONTRACTING OFFICER

Prior to commencing work on construction, the Contractor can obtain a single copy set of the current report forms from the Contracting Officer. The report forms will consist of the Contractor Production Report, Contractor Production Report (Continuation Sheet), Contractor Quality Control (CQC) Report, (CQC) Report (Continuation Sheet), Preparatory Phase Checklist, Initial Phase Checklist, Rework Items List, and Testing Plan and Log.

Deliver the following to the Contracting Officer during Construction:

a. CQC Report: Mail or hand-carry the original (wet signatures) and one copy by 10:00 AM the next working day after each day that work is performed and for every seven consecutive calendar days of no-work

b. Contractor Production Report: Submit as directed by the Contracting Officer by 10:00 AM the next working day after each day that work is performed and for every seven consecutive calendar days of no-work, attached to the CQC Report. Mail or hand-carry the original (wet signatures) and one copy by 10:00 AM the next working day after each day that work is performed and for every seven consecutive calendar days of no-work, attached to the CQC Report.

c. Preparatory Phase Checklist:

   Submit preparatory phase checklist attached to each QC Report copy.

d. Initial Phase Checklist:

   Submit initial phase checklist attached to each QC Report copy.

e. Field Test Reports:

   Submit as directed by the Contracting Officer, the original within two working days after the test is performed, attached to the original CQC Report and one copy attached to each QC Report copy.

f. Monthly Summary Report of Tests:

   Submit monthly summary report of test attached to the last QC Report of the month.

g. Testing Plan and Log:

   Submit testing plan and log attached to the last CQC Report of each month and one copy attached to each CQC Report copy. A copy of the final Testing Plan and Log shall be provided to the Operation and Maintenance Support Information (OMSI) preparer for inclusion into the OMSI documentation.

h. Rework Items List:

   Submit rework items list attached to the last CQC Report of each month and one copy attached to each CQC Report copy.

i. CQC Meeting Minutes:

Submit as directed by the Contracting Officer within two working days after the meeting is held, attached to the original CQC Report and one copy attached to each CQC Report copy.

j. QC Certifications: As required by the paragraph entitled "QC Certifications."

k. Monthly man-hour report

1.4 QC PROGRAM REQUIREMENTS

Establish and maintain a QC program as described in this section. This QC program is a key element in meeting the objectives of NAVFAC Commissioning. The QC program consists of a QC Organization, QC Plan, QC Plan Meeting(s), a Coordination and Mutual Understanding Meeting, QC meetings, three phases of control, submittal review and approval, testing, completion inspections, and QC certifications and documentation necessary to provide materials, equipment, workmanship, fabrication, construction and operations which comply with the requirements of this Contract. The QC program shall cover on-site and off-site work and shall be keyed to the work sequence. No construction work or testing may be performed unless the QC Manager is on the work site. The QC Manager shall report to the Project Superintendent. The QC Manager, Project Superintendent and Project Manager must work together effectively. Although the QC Manager is the primary individual responsible for quality control, all individuals will be held responsible for the quality of work on the job.

1.4.1 Acceptance of the Construction Quality Control (QC) Plan

Acceptance of the QC Plan is required prior to the start of construction. The Contracting Officer reserves the right to require changes in the QC Plan and operations as necessary, including removal of personnel, to ensure the specified quality of work. The Contracting Officer reserves the right to interview any member of the QC organization at any time in order to verify the submitted qualifications. All QC organization personnel shall be subject to acceptance by the Contracting Officer. The Contracting Officer may require the removal of any individual for non-compliance with quality requirements specified in the Contract.

1.4.2 Preliminary Construction Work Authorized Prior to Acceptance

The only construction work that is authorized to proceed prior to the acceptance of the QC Plan is mobilization of storage and office trailers, temporary utilities, and surveying.

1.4.3 Notification of Changes

Notify the Contracting Officer, in writing, of any proposed changes in the QC Plan or changes to the QC organization personnel, a minimum of 10 work days prior to a proposed change. Proposed changes shall be subject to acceptance by the Contracting Officer.

1.5 QC ORGANIZATION

1.5.1 QC Manager

1.5.1.1 Duties

Provide a QC Manager at the work site to implement and manage the QC program. The only duties and responsibilities of the QC Manager are to manage and implement the QC program on this Contract. The QC Manager shall not be designated as the safety competent person as described in Section 01 35 29 “Safety and Occupational Health Requirements.” The QC Manager is required to attend the partnering meetings, QC Plan Meetings, Coordination and Mutual Understanding Meeting, conduct the QC meetings, perform the three phases of control, perform submittal review and approval, ensure testing is performed and provide QC certifications and documentation required in this Contract. The QC Manager is responsible for managing and coordinating the three phases of control and documentation performed by testing laboratory personnel and any other inspection and testing personnel required by this Contract. The QC Manager is the manager of all QC activities.

1.5.1.2 Qualifications

An individual with a minimum of 5 years combined experience as a superintendent, inspector, QC Manager, project manager, or construction manager on similar size and type construction contracts that included the major trades that are part of this contract. The individual must be familiar with the requirements of the EM 385-1-1 and have experience in the areas of hazard identification and safety compliance.
Japanese license that individual must have is specified in Task order such as Construction Quality Management Technician (“Kanri Gijyutsu-sha shikaku-sha shou”) and 1st Class Civil Engineering Works Execution Managing Engineer “1 kyu, Doboku sekou kanri gishi” or 1st Class Building Works Execution Manager “1 kyu, Kenchiku sekou kanri gish” or 1st Class Electric Works Execution Manager “1 kyu, Dennki Kouji sekou kanri gishi” or 1st Class piping works Execution Managing Engineer “1 kyu, Kankouji sekou kanri gishi”.

1.5.2 Construction Quality Management Training

In addition to the above experience and education requirements, the QC Manager shall have completed the course entitled "Construction Quality Management (CQM) for Contractors." If the QC Manager does not have a current certification, they shall obtain the CQM for Contractors course or equivalent course certification within 90 days of award of base contract. This course is periodically offered by the Naval Facilities Engineering Command and the Army Corps of Engineers. Contact the Contracting Officer for information on the next scheduled class.

1.5.3 Alternate QC Manager Duties and Qualifications

Designate an alternate for the QC Manager at the work site to serve in the event of the designated QC Manager's absence. The period of absence may not exceed two weeks at one time, and not more than 30 workdays during a calendar year. The qualification requirements for the Alternate QC Manager shall be the same as for the QC Manager.

1.5.4 Submittal Reviewers Duties and Qualifications

Provide Submittal Reviewers, other than the QC Manager qualified in the disciplines being reviewed, to review and certify that the submittals meet

the requirements of this Contract prior to certification or approval by the QC Manager.

1.6 QUALITY CONTROL (QC) PLAN

1.6.1 Construction Quality Control (QC) Plan

1.6.1.1 Requirements

Provide, for acceptance by the Contracting Officer, a Construction QC Plan submitted in a three-ring binder that includes a table of contents, with major sections identified with tabs, with pages numbered sequentially, and that documents the proposed methods and responsibilities for accomplishing commissioning activities during the construction of the project:

I. QC ORGANIZATION: A chart showing the QC organizational structure.

II. NAMES AND QUALIFICATIONS: Names and qualifications, in resume format, for each person in the QC organization. Include the CQM for Contractors course certifications for the QC Manager and Alternate QC Manager as required by the paragraphs entitled "Construction Quality Management Training" and "Alternate QC Manager Duties and Qualifications".

III. DUTIES, RESPONSIBILITY AND AUTHORITY OF QC PERSONNEL: Duties, responsibilities, and authorities of each person in the QC organization.

IV. OUTSIDE ORGANIZATIONS: A listing of outside organizations, such as architectural and consulting engineering firms, that will be employed by the Contractor and a description of the services these firms will provide.

V. APPOINTMENT LETTERS: Letters signed by an officer of the firm appointing the QC Manager and Alternate QC Manager and stating that they are responsible for implementing and managing the QC program as described in this Contract. Include in this letter the responsibility of the QC Manager and Alternate QC Manager to implement and manage the three phases of control, and their authority to stop work which is not in compliance with the Contract. The QC Manager shall issue letters of direction to authorities, and responsibilities. Copies of the letters shall be included in the QC Plan.

VI. SUBMITTAL PROCEDURES AND INITIAL SUBMITTAL REGISTER: Procedures for reviewing, approving, and managing submittals. Provide the name(s) of the person(s) in the QC organization authorized to review and certify submittals prior to approval. Provide the initial submittal of the Submittal Register as specified in section 01 33 00.00 33 SUBMITTAL PROCEDURES.

VII. TESTING LABORATORY INFORMATION: Testing laboratory information required by the paragraphs entitled "Accreditation Requirements", as applicable.

VIII. TESTING PLAN AND LOG: A Testing Plan and Log that includes the tests required, referenced by the specification paragraph number requiring the test, the frequency, and the person responsible for each test. Use Government forms to log and track tests.

IX. PROCEDURES TO COMPLETE REWORK ITEMS: Procedures to identify, record, track, and complete rework items. Use Government forms to record and track rework items.

X. DOCUMENTATION PROCEDURES: Use Government form.

XI. LIST OF DEFINABLE FEATURES: A Definable Feature of Work (DFOW) is a task that is separate and distinct from other tasks and has control requirements and work crews unique to that task. A DFOW is identified by different trades or disciplines and is an item or activity on the construction schedule. The list of DFOWs shall include, but not be limited to, all critical path activities on the NAS. Include all activities for which this specification requires specialty inspection personnel. Each design development stage and submittal package shall have separate DFOWs in the Network Analysis Schedule.

XII. PROCEDURES FOR PERFORMING THE THREE PHASES OF CONTROL: Identify procedures you will use to ensure the three phases of control are used to manage the quality on this project. For each DFOW, a Preparatory and Initial phase checklist will be filled out during the Preparatory and Initial phase meetings. The Preparatory and Initial Phases and meetings shall be conducted with a view towards obtaining quality construction by planning ahead and identifying potential problems for each DFOW.

XIII. PERSONNEL MATRIX: Not Applicable.

XIV. PROCEDURES FOR COMPLETION INSPECTION: Procedures for identifying and documenting the completion inspection process. Include in these procedures the responsible party for punch out inspection, pre-final inspection, and final acceptance inspection.

XV. TRAINING PROCEDURES AND TRAINING LOG: Not Applicable

XVI. ORGANIZATION AND PERSONNEL CERTIFICATIONS LOG: Procedures for coordinating, tracking and documenting all certifications on subcontractors, testing laboratories, suppliers, personnel, etc. QC Manager will ensure that cortication are current, appropriate for the work being performed, and will not lapse during any period of the contract that the work is being performed.

1.7 QC PLAN MEETINGS

Prior to submission of the QC Plan, the QC Manager will meet with the Contracting Officer to discuss the QC Plan requirements of this Contract. The purpose of this meeting is to develop a mutual understanding of the QC Plan requirements prior to plan development and submission and to agree on the Contractor's list of DFOWs.

1.8 COORDINATION AND MUTUAL UNDERSTANDING MEETING

After submission of the QC Plan, and prior to the start of construction, the QC Manager will meet with the Contracting Officer to present the QC program required by this Contract. When a new QC Manager is appointed, the coordination and mutual understanding meeting shall be repeated.

1.8.1 Purpose

The purpose of this meeting is to develop a mutual understanding of the QC details, including documentation, administration for on-site and off-site work, design intent, environmental requirements and procedures, coordination

of activities to be performed, and the coordination of the Contractor's management, production, and QC personnel. At the meeting, the Contractor will be required to explain in detail how three phases of control will be implemented for each DFOW, as well as how each DFOW will be affected by each management plan or requirement as listed below:

a. Waste Management Plan.

b. IAQ Management Plan.

c. Procedures for noise and acoustics management.

d. Environmental Protection Plan.

e. Environmental regulatory requirements.

1.8.2 Coordination of Activities

Activities included in various sections shall be coordinated to assure efficient and orderly installation of each component. Coordinate operations included under different sections that are dependent on each other for proper installation and operation. Schedule construction operations with consideration for indoor air quality as specified in the IAQ Management Plan.

1.8.3 Attendees

As a minimum, the Contractor's personnel required to attend shall include an officer of the firm, the Project Manager, Project Superintendent, QC Manager, Alternate QC Manager, and subcontractor representatives. Each subcontractor who will be assigned QC responsibilities shall have a principal of the firm at the meeting. Minutes of the meeting will be prepared by the QC Manager and signed by the Contractor and the Contracting Officer. The Contractor shall provide a copy of the signed minutes to all attendees and shall be included in the QC Plan.

1.9 QC MEETINGS

After the start of construction, the QC Manager shall conduct weekly QC meetings once every two weeks at the work site with the Project Superintendent, and the foremen who are performing the work of the DFOWs. The QC Manager shall prepare the minutes of the meeting and provide a copy to the Contracting Officer within two working days after the meeting. The Contracting Officer may attend these meetings. As a minimum, the following shall be accomplished at each meeting:

a. Review the minutes of the previous meeting;

b. Review the schedule and the status of work and rework;

c. Review the status of submittals;

d. Review the work to be accomplished in the next two weeks and documentation required;

e. Resolve QC and production problems (RFI, etc.);

f. Address items that may require revising the QC Plan;

g. Review Accident Prevention Plan (APP);

h. Review environmental requirements and procedures;

i. Review Waste Management Plan;

j. Review IAQ Management Plan;

k. Review Environmental Management Plan;

l. Review the status of training completion;

1.10 THREE PHASES OF CONTROL

The Three Phases of Control shall adequately cover both on-site and off-site work and shall include the following for each DFOW.

1.10.1 Preparatory Phase

Notify the Contracting Officer at least two work days in advance of each preparatory phase meeting. The meeting shall be conducted by the QC Manager and attended by the Project Superintendent, and the foreman responsible for the DFOW. When the DFOW will be accomplished by a subcontractor, that subcontractor's foreman shall attend the preparatory phase meeting. Document the results of the preparatory phase actions in the Preparatory Phase Checklist. Perform the following prior to beginning work on each DFOW:

a. Review each paragraph of the applicable specification sections;

b. Review the Contract drawings;

c. Verify that field measurements are as indicated on construction and/or shop drawings before confirming product orders, in order to minimize waste due to excessive materials;

d. Verify that appropriate shop drawings and submittals for materials and equipment have been submitted and approved. Verify receipt of approved factory test results, when required;

e. Review the testing plan and ensure that provisions have been made to provide the required QC testing;

f. Examine the work area to ensure that the required preliminary work has been completed;

g. Coordinate the schedule of product delivery to designated prepared areas in order to minimize site storage time and potential damage to stored materials;

h. Arrange for the return of shipping/packaging materials, such as wood pallets, where economically feasible;

i. Examine the required materials, equipment and sample work to ensure that they are on hand and conform to the approved shop drawings and submitted data;

j. Discuss construction methods, construction tolerances, workmanship standards, and the approach that will be used to provide quality construction by planning ahead and identifying potential problems for each DFOW;

k. Review the APP and appropriate Activity Hazard Analysis (AHA) to ensure that applicable safety requirements are met, and that required Material Safety Data Sheets (MSDS) are submitted; and

1.10.2 Initial Phase

Notify the Contracting Officer at least five work days in advance of each initial phase. When construction crews are ready to start work on a DFOW, conduct the initial phase with the Project Superintendent, and the foreman responsible for that DFOW. Observe the initial segment of the DFOW to ensure that the work complies with Contract requirements. Document the results of the initial phase in the daily CQC Report and in the Initial Phase Checklist. Repeat the initial phase for each new crew to work on-site, or when acceptable levels of specified quality are not being met. Perform the following for each DFOW:

a. Establish the quality of workmanship required;

b. Resolve conflicts;

c. Ensure that testing is performed by the approved laboratory;

d. Check work procedures for compliance with the APP and the appropriate AHA to ensure that applicable safety requirements are met;

1.10.3 Follow-Up Phase

Perform the following for on-going work daily, or more frequently as necessary, until the completion of each DFOW and document in the daily CQC Report:

a. Ensure the work is in compliance with Contract requirements;

b. Maintain the quality of workmanship required;

c. Ensure that testing is performed by the approved laboratory;

d. Ensure that rework items are being corrected;

e. Perform safety inspections;

1.10.4 Additional Preparatory and Initial Phases

Additional preparatory and initial phases shall be conducted on the same DFOW if the quality of on-going work is unacceptable, if there are changes in the applicable QC organization, if there are changes in the on-site production supervision or work crew, if work on a DFOW is resumed after substantial period of inactivity, or if other problems develop.

1.10.5 Notification of Three Phases of Control for Off-Site Work

Notify the Contracting Officer at least two weeks prior to the start of the preparatory and initial phases.

1.11 SUBMITTAL REVIEW AND APPROVAL

Procedures for submission, review and approval of submittals are described in Section 01 33 00.00 33 SUBMITTAL PROCEDURES.

1.12 TESTING

Except as stated otherwise in the specification sections, perform sampling and testing required under this Contract.

1.12.1 Accreditation Requirements

Construction materials testing laboratories must be accredited by a laboratory accreditation authority and will be required to submit a copy of the Certificate of Accreditation and Scope of Accreditation. The laboratory's scope of accreditation must include the appropriate Japanese Standards (ie; JIS, JASS) or ASTM standards (E 329, C 1077, D 3666, D 3740, A 880, E 543) listed in the technical sections of the specifications. Laboratories engaged in Hazardous Materials Testing shall meet the requirements of Japanese Laws, OSHA and EPA. The policy applies to the specific laboratory performing the actual testing, not just the Corporate Office.

1.12.2 Capability Check

The Contracting Officer retains the right to check laboratory equipment in the proposed laboratory and the laboratory technician's testing procedures, techniques, and other items pertinent to testing, for compliance with the standards set forth in this Contract.

1.12.3 Test Results

Cite applicable Contract requirements, tests or analytical procedures used. Provide actual results and include a statement that the item tested or analyzed conforms or fails to conform to specified requirements. If the item fails to conform, notify the Contracting Officer immediately. Conspicuously stamp the cover sheet for each report in large red letters "CONFORMS" or "DOES NOT CONFORM" to the specification requirements, whichever is applicable. Test results shall be signed by a testing laboratory representative authorized to sign certified test reports. Furnish the signed reports, certifications, and other documentation to the Contracting Officer via the QC Manager. Furnish a summary report of field tests at the end of each month, per the paragraph entitled "INFORMATION FOR THE CONTRACTING OFFICER".

1.12.4 Test Reports and Monthly Summary Report of Tests

The QC Manager shall furnish the signed reports, certifications, and a summary report of field tests at the end of each month to the Contracting Officer. Attach a copy of the summary report to the last daily Contractor Quality Control Report of each month. A copy of the signed test reports and certifications shall be provided to the OMSI preparer for inclusion into the OMSI documentation.

1.13 QC CERTIFICATIONS

1.13.1 CQC Report Certification

Each CQC Report shall contain the following statement: "On behalf of the Contractor, I certify that this report is complete and correct and equipment and material used and work performed during this reporting period is in compliance with the contract drawings and specifications to the best of my knowledge, except as noted in this report."

1.13.2 Invoice Certification

Furnish a certificate to the Contracting Officer with each payment request, signed by the QC Manager, attesting that as-built drawings are current, coordinated and attesting that the work for which payment is requested, including stored material, is in compliance with Contract requirements.

1.13.3 Completion Certification

Upon completion of work under this Contract, the QC Manager shall furnish a certificate to the Contracting Officer attesting that "the work has been completed, inspected, tested and is in compliance with the Contract." A copy of this final QC Certification for completion shall be provided to the OMSI preparer for inclusion into the OMSI documentation.

1.14 COMPLETION INSPECTIONS

1.14.1 Punch-Out Inspection

Near the completion of all work or any increment thereof, established by a completion time stated in the Contract Clause entitled "Commencement, Prosecution, and Completion of Work," or stated elsewhere in the specifications, the QC Manager shall conduct an inspection of the work and develop a "punch list" of items which do not conform to the approved drawings, specifications and Contract. Include in the punch list any remaining items on the "Rework Items List", which were not corrected prior to the Punch-Out Inspection. The punch list shall include the estimated date by which the deficiencies will be corrected. A copy of the punch list shall be provided to the Contracting Officer. The QC Manager, or staff, shall make follow-on inspections to ascertain that all deficiencies have been corrected. Once this is accomplished, the Contractor shall notify the Government that the facility is ready for the Government "Pre-Final Inspection".

1.14.2 Pre-Final Inspection

The Government will perform this inspection to verify that the facility is complete and ready to be occupied. A Government "Pre-Final Punch List" may be developed as a result of this inspection. The QC Manager shall ensure that all items on this list are corrected prior to notifying the Government that a "Final" inspection with the Client can be scheduled. Any items noted on the "Pre-Final" inspection shall be corrected in a timely manner and shall be accomplished before the contract completion date for the work, or any particular increment thereof, if the project is divided into increments by separate completion dates.

1.14.3 Final Acceptance Inspection

The Contractor shall notify the Contracting Officer at least 14 calendar days prior to the date a final acceptance inspection can be held. The notice shall state that all items previously identified on the pre-final punch list will be corrected and acceptable, along with any other unfinished Contract work, by the date of the final acceptance inspection. The Contractor shall be represented by the QC Manager, the Project Superintendent, and others deemed necessary. Attendees for the Government will include the Contracting Officer, other ROICC personnel, and personnel representing the Client. Failure of the Contractor to have all contract work acceptably complete for this inspection will be cause for the Contracting Officer to bill the Contractor for the Government's additional inspection cost in accordance with the Contract Clause entitled "Inspection of Construction."

1.15 DOCUMENTATION

Maintain current and complete records of on-site and off-site QC program operations and activities. The Contractor shall submit all documentation.

1.15.1 Construction Documentation

Reports are required for each day that work is performed and shall be attached to the Contractor Quality Control Report prepared for the same day. Maintain current and complete records of on-site and off-site QC program operations and activities. The forms identified under the paragraph "INFORMATION FOR THE CONTRACTING OFFICER" shall be used. Reports are required for each day work is performed. Account for each calendar day throughout the life of the Contract. Every space on the forms must be filled in. Use N/A if nothing can be reported in one of the spaces. The Project Superintendent and the QC Manager must prepare and sign the Contractor Production and CQC Reports, respectively. The reporting of work shall be identified by terminology consistent with the construction schedule. In the "remarks" sections of the reports, enter pertinent information including directions received, problems encountered during construction, work progress and delays, conflicts or errors in the drawings or specifications, field changes, safety hazards encountered, instructions given and corrective actions taken, delays encountered and a record of visitors to the work site, quality control problem areas, deviations from the QC Plan, construction deficiencies encountered, meetings held. For each entry in the report(s), identify the Schedule Activity No. that is associated with the entered remark.

1.15.1.1 Contractor Production Report

Reports are to be prepared, signed and dated by the project superintendent and shall contain the following information:

a. Date of report, report number, name of contractor, Contract number, title and location of Contract and superintendent present.

b. Weather conditions in the morning and in the afternoon including maximum and minimum temperatures.

c. A list of Contractor and subcontractor personnel on the work site, their trades, employer, work location, description of work performed and hours worked.

d. A list of job safety actions taken and safety inspections conducted. Indicate that safety requirements have been met including the results on the following:

(1) Was a job safety meeting held? (If YES, attach a copy of the meeting minutes.)

(2) Were there any lost time accidents? (If YES, attach a copy of the completed OSHA report.)

(3) Was crane/trenching/scaffold/high voltage electrical/high work done? (If YES, attach a statement or checklist showing inspection performed.)

(4) Was hazardous material/waste released into the environment? (If YES, attach a description of meetings held and accidents that happened.)

e. A list of equipment/material received each day that is incorporated into the job.

f. A list of construction and plant equipment on the work site including the number of hours used, idle and down for repair.

g. Include a "remarks" section in this report which will contain pertinent information including directions received, problems encountered during construction, work progress and delays, conflicts or errors in the drawings or specifications, field changes, safety hazards encountered, instructions given and corrective actions taken, delays encountered and a record of visitors to the work site.

1.15.1.2 Contractor Quality Control Report

Reports are required for each day that work is performed and for every seven consecutive calendar days of no-work and on the last day of a no-work period. Account for each calendar day throughout the life of the Contract. The reporting of work shall be identified by terminology consistent with the construction schedule. Contractor Quality Control Reports are to be prepared, signed and dated by the QC Manager and shall contain the following information:

a. Identify the control phase and the definable feature of work.

b. Results of the Preparatory Phase meetings held including the location of the definable feature of work and a list of personnel present at the meeting. Indicate in the report that for this definable feature of work, the drawings and specifications have been reviewed, submittals have been approved, materials comply with approved submittals, materials are stored properly, preliminary work was done correctly, the testing plan has been reviewed, and work methods and schedule have been discussed.

c. Results of the Initial Phase meetings held including the location of the definable feature of work and a list of personnel present at the meeting. Indicate in the report that for this definable feature of work the preliminary work was done correctly, samples have been prepared and approved, the workmanship is satisfactory, test results are acceptable,

work is in compliance with the Contract, and the required testing has been performed and include a list of who performed the tests.

d. Results of the Follow-up Phase inspections held including the location of the definable feature of work. Indicate in the report for this definable feature of work that the work complies with the Contract as approved in the Initial Phase, and that required testing has been performed and include a list of who performed the tests.

e. Results of the three phases of control for off-site work, if applicable, including actions taken.

f. List the rework items identified, but not corrected by close of business.

g. List the rework items corrected from the rework items list along with the corrective action taken.

h. Include a "remarks" section in this report which will contain pertinent information including directions received, quality control problem areas, deviations from the QC plan, construction deficiencies encountered, QC meetings held, acknowledgement that as-built drawings have been updated, corrective direction given by the QC Organization and corrective action taken by the Contractor.

i. Contractor Quality Control Report certification.

1.15.2 Quality Control Validation

Establish and maintain the following in a series of three ring binders. Binders shall be divided and tabbed as shown below. These binders shall be readily available to the Contracting Officer during all business hours.

a. All completed Preparatory and Initial Phase Checklists, arranged by specification section.

b. All milestone inspections, arranged by Activity Number.

c. c. An up-to-date copy of the Testing Plan and Log with supporting field test reports, arranged by specification section.

d. Copies of all contract modifications, arranged in numerical order. Also include documentation that modified work was accomplished.

e. An up-to-date copy of the Rework Items List.

f. Maintain up-to-date copies of all punch lists issued by the QC staff to the Contractor and Sub-Contractors and all punch lists issued by the Government.

1.15.3 Testing Plan and Log

As tests are performed, the QC Manager shall record on the "Testing Plan and Log" the date the test was performed and the date the test results were forwarded to the Contracting Officer. Attach a copy of the updated "Testing Plan and Log" to the last daily CQC Report of each month, per the paragraph "INFORMATION FOR THE CONTRACTING OFFICER". A copy of the final "Testing

Plan and Log" shall be provided to the OMSI preparer for inclusion into the OMSI documentation.

1.15.4 Rework Items List

The QC Manager shall maintain a list of work that does not comply with the Contract, identifying what items need to be reworked, the date the item was originally discovered, the date the item will be corrected by, and the date the item was corrected. There is no requirement to report a rework item that is corrected the same day it is discovered. Attach a copy of the "Contractor Rework Items List" to the last daily CQC Report of each month. The Contractor shall be responsible for including those items identified by the Contracting Officer.

1.15.5 As-Built Drawings

The QC Manager is required to ensure the as-built drawings, required by Section 01 78 00.00 33 CLOSEOUT SUBMITTALS are kept current on a daily basis and marked to show deviations which have been made from the Contract drawings. Ensure each deviation has been identified with the appropriate modifying documentation (e.g. PC No., Modification No., Request for Information No., etc.). The QC Manager shall initial each revision. Upon completion of work, the QC Manager shall furnish a certificate attesting to the accuracy of the as-built drawings prior to submission to the Contracting Officer.

1.15.6 Report Forms

All reports shall be provided to the Contracting Officer in computer-generated or typewriter written. Electronic copies of these forms are available upon request from the FEAD Office. No hand-written reports will be accepted. The following forms, which are attached at the end of this section, are acceptable for providing the information required by the paragraph entitled "Documentation". While use of these specific formats are not required, any other format used shall contain the same information:

a. Combined Contractor Production Report and Contractor Quality Control Report (1 sheet), with separate continuation sheet.

b. Testing Plan and Log.

c. Deficiency Status Log (Rework Items List).

1.16 NOTIFICATION ON NON-COMPLIANCE

The Contracting Officer will notify the Contractor of any detected non-compliance with the Contract. The Contractor shall take immediate corrective action after receipt of such notice. Such notice, when delivered to the Contractor at the work site, shall be deemed sufficient for the purpose of notification. If the Contractor fails or refuses to comply promptly, the Contracting Officer may issue an order stopping all or part of the work until satisfactory corrective action has been taken. No part of the time lost due to such stop orders shall be made the subject of claim for extension of time for excess costs or damages by the Contractor.

PART 2 PRODUCTS

Not used.

PART 3 EXECUTION

3.1 PREPARATION

Designate receiving/storage areas for incoming material to be delivered according to installation schedule and to be placed convenient to work area in order to minimize waste due to excessive materials handling and misapplication. Store and handle materials in a manner as to prevent loss from weather and other damage. Keep materials, products, and accessories covered and off the ground, and store in a dry, secure area. Prevent contact with material that may cause corrosion, discoloration, or staining. Protect all materials and installations from damage by the activities of other trades.

-- End of Section --

CONTRACTOR PRODUCTION REPORT

(ATTACH ADDITIONAL SHEETS IF NECESSARY)

DATE

CONTRACT NO	TITLE AND LOCATION	REPORT NO
Enter Cnt # Here	Enter Title and Location of Construction Contract Here	Enter Rpt # Here

CONTRACTOR	SUPERINTENDENT
Enter Title and Location of Construction Contract Here	Enter Title and Location of Construction Contract Here

AM WEATHER	PM WEATHER	MAX TEMP (F)	MIN TEMP (F)
Enter AM Weather Data Here	Enter PM Weather Data Here	Enter Max Temp Here	Enter Min Temp Here

WORK PERFORMED TODAY Add Del

Schedule Activity No	WORK LOCATION AND DESCRIPTION	EMPLOYER	NUMBER	TRADE	HRS

JOB SAFETY

WAS A JOB SAFETY MEETING HELD THIS DATE? (If YES attach copy of the meeting minutes)	YES	NO	TOTAL WORK HOURS ON JOB SITE, THIS DATE, INCL CON'T SHEETS
WERE THERE ANY LOST TIME ACCIDENTS THIS DATE? (If YES attach copy of completed OSHA report)	YES	NO	CUMULATIVE TOTAL OF WORK HOURS FROM PREVIOUS REPORT
WAS CRANE/MANLIFT/TRENCHING/SCAFFOLD/HV ELEC/HIGH WORK/HAZMAT WORK DONE? (If YES attach statement or checklist showing inspection performed)	YES	NO	TOTAL WORK HOURS FROM START OF CONSTRUCTION
	YES	NO	

Schedule Activity No	LIST SAFETY ACTIONS TAKEN TODAY/SAFETY INSPECTIONS CONDUCTED	☐ SAFETY REQUIREMENTS HAVE BEEN MET	Add	Del

EQUIPMENT/MATERIAL RECEIVED TODAY TO BE INCORPORATED IN JOB (INDICATE SCHEDULE ACTIVITY NUMBER) Add Del

Schedule Activity No	Submittal #	Description of Equipment/Material Received

CONSTRUCTION AND PLANT EQUIPMENT ON JOB SITE TODAY. INDICATE HOURS USED AND SCHEDULE ACTIVITY NUMBER. Add Del

Schedule Activity No	Owner	Description of Construction Equipment Used Today (incl Make and Model)	Hours Used

Add Del

Schedule Activity No	REMARKS

CONTRACTOR/SUPERINTENDENT DATE

4296/2C (9/98)

CONTRACTOR QUALITY CONTROL REPORT

(ATTACH ADDITIONAL SHEETS IF NECESSARY)

DATE

REPORT NO Enter Rpt # Here

PHASE | CONTRACT NO Enter Cnt # Here | CONTRACT TITLE Enter Title and Location of Construction Contract Here

PREPARATORY WAS PREPARATORY PHASE WORK PREFORMED TODAY? ◯ YES ◯ NO
IF YES, FILL OUT AND ATTACH SUPPLEMENTAL PREPARATORY PHASE CHECKLIST. Add Del

Schedule Activity No	Definable Feature of Work	Index #

INITIAL WAS INITIAL PHASE WORK PREFORMED TODAY? ◯ YES ◯ NO
IF YES, FILL OUT AND ATTACH SUPPLEMENTAL INITIAL PHASE CHECKLIST. Add Del

Schedule Activity No	Definable Feature of Work	Index #

FOLLOW-UP WORK COMPLIES WITH CONTRACT AS APPROVED DURING INITIAL PHASE? ◯ YES ◯ NO
WORK COMPLIES WITH SAFETY REQUIREMENTS AND INSPECTION COMPLIES WITH EM385-1-1? ◯ YES ◯ NO Add Del

Schedule Activity No	Description of Work, Testing Performed & By Whom, Definable Feature of Work, Specification Section, Location and List of Personnel Present

REWORK ITEMS IDENTIFIED TODAY (NOT CORRECTED BY CLOSE OF BUSINESS) Add Del

Schedule Activity No	Description

REWORK ITEMS CORRECTED TODAY (FROM REWORK ITEMS LIST)

Schedule Activity No	Description

REMARKS (Also Explain Any Follow-Up Phase checklist Item From Above That Was Answered "NO"; Work Deficiency, Safety Deficiency.) Manuf. Rep On-Site, etc. Add Del

Schedule Activity No	Description

On behalf of the contractor, I certify that this report is complete and correct and equipment and material used and work performed during this reporting period is in compliance with the contract drawings and specifications to the best of my knowledge except as noted in this report.

AUTHORIZED QC MANAGER AT SITE DATE

GOVERNMENT QUALITY ASSURANCE REPORT

DATE

QUALITY ASSURANCE REPRESENTATIVE'S REMARKS AND/OR EXCEPTIONS TO THE REPORT Add Del

Schedule Activity No	Description

GOVERNMENT QUALITY ASSURANCE MANAGER DATE

4296/2C (9/98)

PREPARATORY PHASE CHECKLIST

(CONTINUED ON SECOND PAGE)

SPEC SECTION: Enter Spec Section # Here
DATE:

CONTRACT NO	DEFINABLE FEATURE OF WORK	SCHEDULE ACT NO.	INDEX #
Enter Cnt# Here	Enter DFOW Here	Enter Sched Act ID Here	Enter Index # Here

PERSONNEL PRESENT	GOVERNMENT REP NOTIFIED ____ HOURS IN ADVANCE:	◯ YES ◯ NO	Add / Del
NAME	POSITION	COMPANY/GOVERNMENT	
SUBMITTALS	REVIEW SUBMITTALS AND/OR SUBMITTAL REGISTER. HAVE ALL SUBMITTALS BEEN APPROVED? (IF YES, MAINTAIN IN PRESENT CONDITION AS LONG AS POSSIBLE AND DESCRIBE LOCATION OF SAMPLE)	◯ YES ◯ NO	Add / Del
	ARE ALL MATERIALS ON HAND? IF NO, WHAT ITEMS ARE MISSING.	◯ YES ◯ NO	Add / Del
	CHECK APPROVED SUBMITTALS AGAINST DELIVERED MATERIAL. (THIS SHOULD BE DONE AS MATERIAL ARRIVES.) COMMENTS.		Add / Del
MATERIAL STORAGE	ARE MATERIALS STORED PROPERLY? IF NO, WHAT ACTION IS TAKEN?	◯ YES ◯ NO	Add / Del
SPECIFICATIONS	REVIEW EACH PARAGRAPH OF SPECIFICATIONS.		Add / Del
	DISCUSS PROCEDURE FOR ACCOMPLISHING THE WORK.		Add / Del
	CLARIFY ANY DIFFERENCES.		Add / Del
PRELIMINARY WORK & PERMITS	ENSURE PRELIMINARY WORK IS CORRECT AND PERMITS ARE ON FILE. IF NOT, WHAT ACTION IS TAKEN?		Add / Del
TESTING	IDENTIFY TEST TO BE PERFORMED, FREQUENCY, AND BY WHOM.		Add / Del
	WHEN REQUIRED?		Add / Del
	WHERE REQUIRED?		Add / Del
	REVIEW TESTING PLAN.		Add / Del
	HAS TEST FACILITIES BEEN APPROVED?		Add / Del
SAFETY	ACTIVITY HAZARD ANALYSIS APPROVED? REVIEW APPLICABLE PORTION OF EM 385-1-1.	◯ YES ◯ NO	Add / Del
MEETING COMMENTS	NAVY/ROICC COMMENTS DURING MEETING.		Add / Del
OTHER ITEMS OR REMARKS	OTHER ITEMS OR REMARKS.		Add / Del

QC MANAGER _____ DATE _____

4296/2C (9/98)

INITIAL PHASE CHECKLIST

SPEC SECTION: Enter Spec Section # Here
DATE:

CONTRACT NO	DEFINABLE FEATURE OF WORK	SCHEDULE ACT NO.	INDEX #
Enter Cnt# Here	Enter DFOW Here	Enter Sched Act ID Here	Enter Spec Section # Here

PERSONNEL PRESENT — GOVERNMENT REP NOTIFIED ____ HOURS IN ADVANCE: ◯ YES ◯ NO [Add] [Del]

NAME	POSITION	COMPANY/GOVERNMENT

PROCEDURE COMPLIANCE — IDENTIFY FULL COMPLIANCE WITH PROCEDURES IDENTIFIED AT PREPARATORY, COORDINATE PLANS, SPECIFICATIONS AND SUBMITTALS [Add] [Del]

COMMENTS:

PRELIMINARY WORK — ENSURE PRELIMINARY WORK IS COMPLETE AND CORRECT. IF NOT, WHAT ACTION IS TAKEN? [Add] [Del]

WORKMANSHIP — ESTABLISH LEVEL OF WORKMANSHIP
WHERE IS WORK LOCATED? [Add] [Del]

IS SAMPLE PANEL REQUIRED? ◯ YES ◯ NO
WILL THE INITIAL WORK BE CONSIDERED A SAMPLE? ◯ YES ◯ NO [Add] [Del]

(IF YES, MAINTAIN IN PRESENT CONDITION AS LONG AS POSSIBLE AND DESCRIBE LOCATION OF SAMPLE)

RESOLUTION — RESOLVE ANY DIFFERENCES. [Add] [Del]

COMMENTS:

CHECK SAFETY — REVIEW JOB CONDITIONS USING EM 385-1-1 ACTIVITY HAZARD ANALYSIS AND MSDS [Add] [Del]

COMMENTS:

OTHER — OTHER ITEMS OR REMARKS [Add] [Del]

QC MANAGER _____ DATE _____

4296/2C (9/98)

CONSTRUCTION CONTRACT NON-COMPLIANCE NOTICE

NAVFAC 4330/36 (Rev. 7-87)

This is prepared on CARBONLESS paper.
Tear off a complete set before filling in.
See additional instructions on reverse side.

1. CONTRACTOR/RESPONSIBLE INDIVIDUAL

3. NOTICE NUMBER

2. CONTRACT NUMBER, PROJECT AND ACTIVITY

4. DATE

5. SPEC PARAGRAPH AND/OR DRAWING NUMBER

6. REFERENCE (Shop Drawing, Certification, CQC Report Number)

7. DEFICIENCY IN WORKMANSHIP AND/OR MATERIAL/REPLY DATE

Add
Del

8. CORRECTIVE ACTION ACCOMPLISHED

Add
Del

This notice does NOT authorize any work not included in the Contract and shall not constitute a basis for additional payment or time.

If you are in disagreement with this Notice, contact the Resident Officer in Charge of Construction immediately

9A. NAVY QA REPRESENTATIVE

DATE NOTED | Signature | Title

9B. ROICC/ROICC REPRESENTATIVE

DATE NOTED | Signature | Title

10. CONTRACTOR'S ACKNOWLEDGEMENT

DATE NOTED | Signature | Title

INSTRUCTIONS

General

This form is applicable to construction contracts accomplished under the cognizance of the Commander, Naval Facilities Engineering Command.

Distribution of completed form

Superintendent of CQC Representative (White) (Original and first copy)
Contractor's home office (Pink)
ROICC designated representative (Blue)
ROICC Office (Yellow)

Item No. 1, Contractor/Responsible Individual

Individual responsible - superintendent, foreman, or sub-foreman

Item No. 3, Notice Number

Number consecutively for each job with only ONE DEFICIENCY noted.

Item No. 7, Deficiency in workmanship and/or material - reply date.

Briefly describe the deficiency and include the date that RETURN of white copy with Item No. 8 completed to the OICC?ROICC is required.

Item No. 10, Contractor's Acknowledgement

For completion by contractor as appropriate. If this is a CQC job, indicate corrective action on daily CQC report and post in the non-compliance check-off list.

Appendix P-2

REWORK ITEMS LIST

Contractor No. and Title: ____________________

Contractor: ____________________

NUMBER	DATE IDENTIFIED	DESCRIPTION	CONTRACT REQUIREMENT (Spec. Section and Par.No.Drawing No. And Detail No., etc.)	ACTION TAKEN BY THE QC MANAGER	RESOLUTION	DATE COMPLETED

42963/3 9/98

SHEET OF

TESTING PLAN AND LOG

CONTRACT NUMBER			PROJECT TITLE AND LOCATION							CONTRACTOR	
SPECIFICATION SECTION AND PARAGRAPH NUMBER	ITEM OF WORK	TEST REQUIRED	ACCREDITED/ APROVED LAB		SAMPLED BY	TESTED BY	LOCATION OF TEST		DATE COMPLETED	DATE FORWARDED TO CONTR. OFF.	REMARKS
			YES	NO			ON SITE	OFF SITE			

SECTION 01 50 00.00 33

TEMPORARY FACILITIES AND CONTROLS

PART 1 GENERAL

1.1 SUMMARY

Requirements of this Section apply to, and are a component of, each section of the specifications.

1.2 REFERENCES

The publications listed below form a part of this specification to the extent referenced. The publications are referred to within the text by the basic designation only. The latest version of the publication at time of award shall be used.

AMERICAN WATER WORKS ASSOCIATION (AWWA)

AWWA C511	Reduced-Pressure Principle Backflow Prevention Assembly

FOUNDATION FOR CROSS-CONNECTION CONTROL AND HYDRAULIC RESEARCH (FCCCHR)

FCCCHR List	List of Approved Backflow Prevention Assemblies

NATIONAL FIRE PROTECTION ASSOCIATION (NFPA)

NFPA 241	Safeguarding Construction, Alteration, and Demolition Operations
NFPA 70	National Electrical Code

LAW OF THE GOVERNMENT OF JAPAN

Japanese Aviation Law “Koukuu-hou”

1.3 SUBMITTALS

Government approval is required for submittals with a "G" designation; submittals not having a "G" designation are for Contractor Quality Control approval. When used, a designation following the "G" designation identifies the office that will review the submittal for the Government. The following shall be submitted in accordance with Section 01 33 00.00 33 SUBMITTAL PROCEDURES:

SD-01 Preconstruction Submittals

Traffic control plan; G (FEAD)

Fence plan; G (FEAD)

PART 2 PRODUCTS

2.1 TEMPORARY SIGNAGE

2.1.1 Project and Safety Signs

The requirements for the signs, their content, and location are as specified in Section 01 58 00.00 33 PROJECT IDENTIFICATION. Erect signs within 15 days after receipt of the notice to proceed. Correct the data required by the safety sign daily, with light colored metallic or non-metallic numerals.

2.2 TEMPORARY TRAFFIC CONTROL

2.2.1 Barricades

Erect and maintain temporary barricades to limit public access to hazardous areas. Whenever safe public access to paved areas such as roads, parking areas or sidewalks is prevented by construction activities or as otherwise necessary to ensure the safety of both pedestrian and vehicular traffic barricades will be required. Securely place barricades clearly visible with adequate illumination to provide sufficient visual warning of the hazard during both day and night.

2.2.2 Fencing

a. Provide fencing along the construction site at all open excavations and tunnels to control access by unauthorized people. Fencing must be installed to be able to restrain a force of at least 114.00 kg against it. Colored traffic cones will not be used in lieu of fencing, when it is determined necessary by the Government designated authority. For pedestrian walkways, and other areas as determined by the Government designated authority, a minimum of one meter high plastic interlocking fence is required.

b. Enclose the project work area and Contractor lay-down area with 1.8 m height steelsafety fence, steel tube framing with steel plate lower half and steel mesh upper half, interlocking type fence. Provide anchor blocks of fence manufacturer’s standard accessories for anchoring. Provide gate with lock.

c. If the project have potential to generate scattered items (such as building demolition, cliff protection, etc), enclose the work area with minimum 3.0 m high steel sheeting fence and gate. Remove the fence upon completion and acceptance of the work. Intent is to protect a pedestrian and vehicular from scattered items generated by the work area.

d. In addition, prior to the start of work, enclose those areas at the construction site which are not within the construction fence with a temporary safety fence, including gates and warning signs, to protect the public from construction activities. The safety fence shall match the base standard color (or bright orange where it protects excavated areas), shall be made of plastic fence, a minimum of 42 inches high, supported and tightly secured to steel posts located on minimum 10 foot centers. Remove the fence from the work site upon completion of the contract.

e. Fence in public areas shall be clearly visible with adequate illumination to provide sufficient visual warning of the hazard during both day and night.

f. Signs warning of the presence of construction hazards and requiring unauthorized persons to keep out of the construction area shall be posted on the fencing. At minimum, signs shall be posted every 150 ft (45.7 m). Fenced sides of projects that are less than 150 ft (45.7 m) shall, at minimum, have at least one warning sign.

2.2.3 Temporary Wiring

Provide temporary wiring in accordance with NFPA 241 and NFPA 70, Assured Equipment Grounding Conductor Program. Include frequent inspection of all equipment and apparatus.

2.2.4 Backflow Preventers

Temporary backflow preventing device shall be provided to all temporary connections used for construction, to protect existing potable water system from contamination. The particular make, model/design, and size of backflow preventers to be installed shall be included in the latest edition of the List of Approved Backflow Prevention Assemblies issued by the FCCCHR List or Local Code.

PART 3 EXECUTION

3.1 EMPLOYEE PARKING

Contractor employees will park privately owned vehicles in an area designated by the Contracting Officer. This area will be within reasonable walking distance of the construction site. Contractor employee parking must not interfere with existing and established parking requirements of the government installation.

3.2 AVAILABILITY OF UTILITIES SERVICES

3.2.1 Temporary Utilities

Provide temporary utilities required for construction. Materials may be new or used, must be adequate for the required usage, not create unsafe conditions, and not violate applicable codes and standards.

3.2.2 Payment for Utility Services

Pursuant to the Contract Clauses entitled "Availability and Use of Utilities Services," reasonable amounts of the following utilities will be made available to the Contractor at no cost, except the utilities for the Contractor's temporary office and hut at the following rates:

Electricity:	$221.92 per 1,000 KWH
Potable Water:	$ 15.28 per 1,000 Gal
Waste water connected to sewage line:	$10.17 per 1000 Gal ($9.15 per 900 Gal)

(90% of potable water usage will be charged to the Contractor as waste water usage.)
Rates shown were the latest available during the preparation of this specification, and are provided for informational purposes only.
The point at which the Government will deliver such utilities or services and the quantity available is to be directed by the FEAD (ROICC). Pay costs incurred in connecting, disconnecting converting, and transferring the utilities to the work. The Contractor shall furnish backflow-preventing devices on connections to domestic water lines; meters; transformers; necessary accessories and perform necessary excavation/backfilling. The Contractor shall make connections and disconnections.

3.2.3 Meters and Temporary Connections

At the Contractors expense and in a manner satisfactory to the Contracting Officer, provide and maintain necessary temporary connections, distribution lines, and meter bases required to measure the amount of each utility used for the purpose of determining charges. Notify the Contracting Officer, in writing, 5 working days before final electrical connection is desired so that a utilities contract can be established. The Government will provide approval of the Contractor's temporary wiring installation .

3.2.4 Final Meter Reading

Before completion of the work and final acceptance of the work by the Government, notify the Contracting Officer, in writing, 5 working days before termination is desired. The Government will take a final meter reading . Then remove all the temporary distribution lines, meter bases, and associated paraphernalia. Pay all outstanding utility bills before final acceptance of the work by the Government.

3.2.5 Sanitation

a. Provide and maintain within the construction area minimum field-type sanitary facilities approved by the Contracting Officer and periodically empty wastes into a municipal, district, or station sanitary sewage system, or remove waste to a commercial facility. Obtain approval from the system owner prior to discharge into any municipal, district, or commercial sanitary sewer system. Any penalties and / or fines associated with improper discharge will be the responsibility of the Contractor. Coordinate with the Contracting Officer and follow station regulations and procedures when discharging into the station sanitary sewer system. Maintain these conveniences at all times without nuisance. Include provisions for pest control and elimination of odors. Government toilet facilities will not be available to Contractor's personnel.

3.2.6 Obstruction Lighting of Cranes

Provide a minimum of 2 aviation red or high intensity white obstruction lights on temporary structures (including cranes) over 60-m above ground level. Light construction and installation must comply with Japanese aviation law “Koukuu-hou”. Lights must be operational during periods of reduced visibility, darkness, and as directed by the Contracting Officer.

3.2.7 Fire Protection

Provide temporary fire protection equipment for the protection of personnel and property during construction. Remove debris and flammable materials daily to minimize potential hazards.

3.3 TRAFFIC PROVISIONS

3.3.1 Maintenance of Traffic

a. Conduct operations in a manner that will not close any thoroughfare or interfere in any way with traffic except with written permission of the Contracting Officer at least 15 calendar days prior to the proposed modification date, and provide a Traffic Control Plan detailing the proposed controls to traffic movement for approval. Make all notifications and obtain any permits required for modification to traffic movements outside Station's jurisdiction. Contractor may move oversized and slow-moving vehicles to the worksite provided requirements of the highway authority have been met.

b. Conduct work so as to minimize obstruction of traffic, and maintain traffic on at least half of the roadway width at all times. Obtain approval from the Contracting Officer prior to starting any activity that will obstruct traffic.

c. Provide, erect, and maintain, at contractors expense, lights, barriers, signals, passageways, detours, and other items, that may be required by the Life Safety Signage, overhead protection authority having jurisdiction.

3.3.2 Protection of Traffic

Maintain and protect traffic on all affected roads during the construction period except as otherwise specifically directed by the Contracting Officer. Measures for the protection and diversion of traffic, including the provision of watchmen and flagmen, erection of barricades, placing of lights around and in front of equipment the work, and the erection and maintenance of adequate warning, danger, and direction signs, will be as required by the State and local authorities having jurisdiction. Protect the traveling public from damage to person and property. Minimize the interference with public traffic on roads selected for hauling material to and from the site. Investigate the adequacy of existing roads and their allowable load limit. Contractor is responsible for the repair of any damage to roads caused by construction operations.

3.3.3 Rush Hour Restrictions

Do not interfere with the peak traffic flows (6:30 to 8:00 a.m. and 3:30 to 5:00 p.m.) preceding and during normal operations without notification to and approval by the Contracting Officer.

3.3.4 Dust Control

Dust control methods and procedures must be approved by the Contracting Officer. Treat dust abatement on access roads with applications of calcium chloride, water sprinklers, or similar methods or treatment.

3.4 CONTRACTOR'S TEMPORARY FACILITIES

3.4.1 Safety

Protect the integrity of any installed safety systems or personnel safety devices. If entrance into systems serving safety devices is required, the Contractor must obtain prior approval from the Contracting Officer. If it is temporarily necessary to remove or disable personnel safety devices in order to accomplish contract requirements, provide alternative means of protection prior to removing or disabling any permanently installed safety devices or equipment and obtain approval from the Contracting Officer.

3.4.2 Administrative Field Offices (Contractor’s Facility)

Not available.

3.4.3 Storage Area

Construct a temporary 6 foot high fence around materials. Include plastic strip inserts, colored, so that visibility through the fence is obstructed. Fence posts may be driven, in lieu of concrete bases, where soil conditions permit. Do not place or store Trailers, materials, or equipment outside the fenced area unless such trailers, materials, or equipment are assigned a separate and distinct storage area by the Contracting Officer away from the vicinity of the construction site but within the installation boundaries. Equipment or materials must not be open to public view with the exception of those items which are in support of ongoing work on any given day. Do not stockpile materials outside the fence in preparation for the next day's work. Park mobile equipment, such as tractors, wheeled lifting equipment, cranes, trucks, and like equipment within the fenced area at the end of each work day.

3.4.4 Maintenance of Storage Area

a. Keep fencing in a state of good repair and proper alignment. Grassed or unpaved areas, which are not established roadways, will be covered with a layer of gravel as necessary to prevent rutting and the tracking of mud onto paved or established roadways, should the Contractor elect to traverse them with construction equipment or other vehicles; gravel gradation will be at the Contractor's discretion. Mow and maintain grass located within the boundaries of the construction site for the duration of the project. Grass and vegetation along fences, buildings, under trailers, and in areas not accessible to mowers will be edged or trimmed neatly.

3.4.5 Security Provisions

Provide adequate outside security lighting at the Contractor's temporary facilities. The Contractor will be responsible for the security of its own equipment.

3.4.6 Weather Protection of Temporary Facilities and Stored Materials

3.4.6.1 Site Storm Protection

When a warning of gale force winds is issued, take precautions to minimize danger to persons, and protect the work and nearby Government property. Precautions must include, but are not limited to, closing openings; removing loose materials, tools and equipment from exposed locations; and removing or

securing scaffolding and other temporary work. Close openings in the work when storms of lesser intensity pose a threat to the work or any nearby Government property.

3.4.6.2 Tropical Cyclone Condition of Readiness

Unless directed otherwise, comply with:

a. Condition FOUR (Sustained winds of 50 knots or greater expected within 72 hours): Normal daily jobsite cleanup and good housekeeping practices. Collect and store in piles or containers scrap lumber, waste material, and rubbish for removal and disposal at the close of each work day. Maintain the construction site including storage areas, free of accumulation of debris. Stack form lumber in neat piles less than 4 feet high. Remove all debris, trash, or objects that could become missile hazards.

b. Condition THREE (Sustained winds of 50 knots or greater expected within 48 hours): Maintain "Condition FOUR" requirements and commence securing operations necessary for "Condition ONE" which cannot be completed within 18 hours. Cease all routine activities which might interfere with securing operations. Commence securing and stow all gear and portable equipment. Make preparations for securing buildings. Review requirements pertaining to "Condition TWO" and continue action as necessary to attain "Condition THREE" readiness. Contact Contracting Officer for weather and COR updates and completion of required actions.

c. Condition TWO (Sustained winds of 50 knots or greater expected within 24 hours): Curtail or cease routine activities until securing operation is complete. Reinforce or remove form work and scaffolding. Secure machinery, tools, equipment, materials, or remove from the jobsite. Expend every effort to clear all missile hazards and loose equipment from general base areas. Contact Contracting Officer for weather and Condition of Readiness (COR) updates and completion of required actions.

d. Condition ONE. (Sustained winds of 50 knots or greater expected within 12 hours): Secure the jobsite, and leave Government premises.

3.5 TEMPORARY PROJECT SAFETY FENCING

As soon as practicable, but not later than 15 days after the date established for commencement of work, furnish and erect temporary project safety fencing at the work site. Maintain the safety fencing during the life of the contract and, upon completion and acceptance of the work, will become the property of the Contractor and be removed from the work site.

3.6 CLEANUP

Remove construction debris, waste materials, packaging material and the like from the work site daily. Any dirt or mud which is tracked onto paved or surfaced roadways must be cleaned away. Store within the fenced area described above or at the supplemental storage area any materials resulting from demolition activities which are salvageable. Neatly stacked stored materials not in trailers, whether new or salvaged.

3.7 RESTORATION OF STORAGE AREA

Upon completion of the project remove the bulletinboard, signs, barricades, haulroads, and any other temporary products from the site. After removal of trailers, materials, and equipment from within the fenced area, remove the fence that will become the property of the Contractor. Restore to the original or better condition, areas used by the Contractor for the storage of equipment or material, or other use. Gravel used to traverse grassed areas must be removed and the area restored to its original condition, including top soil and seeding as necessary.

3.8 TEMPORARY WIRING

Provide temporary wiring in accordance with NFPA 241 and NFPA 70, Assured Equipment Grounding Conductor Program. Program shall include frequent inspection of all equipment and apparatus.

-- End of Section --

SECTION 01 57 19.00 33

TEMPORARY ENVIRONMENTAL CONTROLS

PART 1 GENERAL

1.1 REFERENCES

The publications listed below form a part of this specification to the extent referenced. The publications are referred to within the text by the basic designation only. The latest version of the publication at time of award shall be used.

Japanese Law (JL)

No. 64	The Oscillation (Vibration) Control Act.
No. 53	The Soil Contamination Countermeasures.
No. 85	Nature Conservation Law
No. 91	The Basic Environment Law.
No. 97	The Air Pollution Control Act (Clean Air Act)
No. 98	The Noise Control Act.
No. 137	The Waste Management and Public Cleansing Act
No. 138	The Water Pollution Prevention Act

Kanagawa Prefectural Office's Publication

"Kanagawa-ken Seikatsu Kankyo no Hozen ni Kansuru Jourei" (Kanagawa Prefectural Living Environmental Conservation Ordinance)

Commander, Fleet Activities Instruction (COMFLEACTINST)

COMFLEACTINST 5090.1	Hazardous Waste (HW) Managemevnt Plan for Commander, Fleet Activities (COMFLEACT), Yokosuka/Yokohama, Ikego and Outlying Areas

Notification of the Environment Agency, Japan

No. 13	Detection Method for the Presence of Toxicity

HEADQUARTERS, US FORCES JAPAN, DEPARTMENT OF DEFENSE (DOD)

JEGS	Japan Environmental Governing Standards

DEPARTMENT OF DEFENSE (DOD)

DOD 4717.05 G	OEBGD (May 2007) Overseas Environmental Baseline Guidance Document

Ozone Depleting Substances Turn-In Procedures (Sep 2012)

1.2 DEFINITIONS

1.2.1 Sediment

Soil and other debris that have eroded and have been transported by runoff water or wind.

1.2.2 Solid Waste

Garbage, refuse, debris, sludge, or other discharged material, including solid, liquid, semisolid, or contained gaseous materials resulting from domestic, industrial, commercial, mining, or agricultural operations. Types of solid waste typically generated at construction sites may include:

a. Green waste: The vegetative matter from landscaping, land clearing and grubbing, including, but not limited to, grass, bushes, scrubs, small trees and saplings, tree stumps and plant roots. Marketable trees, grasses and plants that are indicated to remain, be re-located, or be re-used are not included.

b. Surplus soil: Existing soil that is in excess of what is required for this work, including aggregates intended, but not used, for on-site mixing of concrete, mortars and paving. Contaminated soil meeting the definition of hazardous material or hazardous waste is not included.

c. Debris: Non-hazardous solid material generated during the construction, demolition, or renovation of a structure which exceeds 60 mm(2.5 inch)2.5 inch particle size that is: a manufactured object; plant or animal matter; or natural geologic material (e.g. cobbles and boulders), broken or removed concrete, masonry, and rock asphalt paving; ceramics; roofing paper and shingles. Inert materials may be reinforced with or contain ferrous wire, rods, accessories and weldments. A mixture of debris and other material such as soil or sludge is also subject to regulation as debris if the mixture is comprised primarily of debris by volume, based on visual inspection.

d. Wood: Dimension and non-dimension lumber, plywood, chipboard, hardboard. Treated and/or painted wood that meets the definition of lead contaminated or lead based contaminated paint is not included.

e. Scrap metal: Scrap and excess ferrous and non-ferrous metals such as reinforcing steel, structural shapes, pipe and wire that are recovered or collected and disposed of as scrap. Scrap metal meeting the definition of hazardous material or hazardous waste is not included.

f. Paint cans: Metal cans that are empty of paints, solvents, thinners and adhesives. If permitted by the paint can label, a thin dry film may remain in the can.

g. Recyclables: Materials, equipment and assemblies such as doors, windows, door and window frames, plumbing fixtures, glazing and mirrors that are recovered and sold as recyclable. Metal meeting the definition of lead contaminated or lead based paint contaminated may be included as recyclable if sold to a scrap metal company. Paint cans may be included.

h. Hazardous Waste: By definition, to be a hazardous waste a material must first meet the definition of a solid waste. Hazardous waste and hazardous debris are special cases of solid waste. They have additional regulatory controls and must be handled separately. They are thus defined separately in this document.

Material not regulated as solid waste are: nuclear source or byproduct materials regulated under the Federal Atomic Energy Act of 1954 as amended; suspended or dissolved materials in domestic sewage effluent or irrigation return flows, or other regulated point source discharges; regulated air emissions; and fluids or wastes associated with natural gas or crude oil exploration or production.

1.2.3 Hazardous Debris

As defined in Solid Waste paragraph, debris that contains listed hazardous waste (either on the debris surface, or in its interstices, such as pore structure) per JEGS; or debris that exhibits a characteristic of hazardous waste per JEGS.

1.2.4 Chemical Wastes

This includes salts, acids, alkalizes, herbicides, pesticides, and organic chemicals.

1.2.5 Garbage

Refuse and scraps resulting from preparation, cooking, dispensing, and consumption of food.

1.2.6 Hazardous Waste

Any discarded material, liquid, solid, semi-solid, gas, or contained gas, which meets the definition of hazardous material specified below or is designated hazardous waste by JEGS.
Hazardous waste include any waste material which because of its quantity, concentration, or physical, chemical, or infectious characteristics may pose a substantial hazard to human health or the environment and which has been so designated.

1.2.7 Hazardous Materials

Hazardous material is any material that:

a. Hazardous materials as defined in JEGS, or

b. Requires a Material Safety Data Sheet (MSDS),

c. During end use, treatment, handling, packaging, storage, transpiration, or disposal meets or has components that meet or have potential to meet the definition of a hazardous waste as defined by JEGS or prefectual regulations.

Designation of a material by this definition, when separately regulated or controlled by other instructions or directives, does not eliminate the need for adherence to that hazard-specific guidance which takes precedence over this instruction for "control" purposes. Such material include ammunition,

weapons, explosive actuated devices, propellants, pyrotechnics, chemical and biological warfare materials, medical and pharmaceutical supplies, medical waste and infectious materials, bulk fuels, radioactive materials, and other materials such as asbestos, mercury, and polychlorinated biphenyls (PCBs). Nonetheless, the exposure may occur incident to manufacture, storage, use and demilitarization of these items.

1.2.8 Oily Waste

Those materials which are, or were, mixed with used oil and have become separated from that used oil. Oily wastes also means materials, including wastewaters, centrifuge solids, filter residues or sludges, bottom sediments, tank bottoms, and sorbents which have come into contact with and have been contaminated by, used oil and may be appropriately tested and discarded in a manner which is in compliance with other Japanese and local requirements.

This definition includes materials such as oily rags, "kitty litter" sorbent clay and organic sorbent material. These materials may be land filled provided that:

a. It is not prohibited in local prefectural regulations/ordinances

Large quantities of this material, generated as a result of a major spill or in lieu of proper maintenance of the processing equipment, are a solid waste. As a solid waste, a hazardous waste determination must be performed prior to disposal. As this can be an expensive process, it is recommended that this type of waste be minimized through good housekeeping practices and employee education.

1.2.9 Regulated Waste

Those solid waste that have specific additional local controls for handling, storage, or disposal.

1.2.10 Class I Ozone Depleting Substances (ODS)

Class I ODS is defined in Table C2.T2 of OEBGD and Table 8-1 of OPNAVINST 5090.1C; and includes The Following Chemicals:

Chlorofluorocarbon-11 (CFC-11)
Chlorofluorocarbon-12 (CFC-12)
Chlorofluorocarbon-13 (CFC-13)
Chlorofluorocarbon-111 (CFC-111)
Chlorofluorocarbon-112 (CFC-112)
Chlorofluorocarbon-113 (CFC-113)
Chlorofluorocarbon-114 (CFC-114)
Chlorofluorocarbon-115 (CFC-115)
Chlorofluorocarbon-211 (CFC-211)
Chlorofluorocarbon-212 (CFC-212)
Chlorofluorocarbon-213 (CFC-213)
Chlorofluorocarbon-214 (CFC-214)
Chlorofluorocarbon-215 (CFC-215)
Chlorofluorocarbon-216 (CFC-216)
Chlorofluorocarbon-217 (CFC-217)
Chlorofluorocarbon-500 (CFC-500)
Chlorofluorocarbon-502 (CFC-502)

Chlorofluorocarbon-503 (CFC-503)
Halon-1211
Halon-1301
Halon-2402
Carbon tetrachloride
Methyl bromide
Methyl chloroform

1.2.11 Class II Ozone Depleting Substances (ODS)

Class II ODS is defined in Table C2.T2 of OEBGD and Table 8-2 of OPNAVINST 5090.1C; and includes The Following Chemicals:

hydrochlorofluorocarbon-21 (HCFC-21)
hydrochlorofluorocarbon-22 (HCFC-22)
hydrochlorofluorocarbon-31 (HCFC-31)
hydrochlorofluorocarbon-121 (HCFC-121)
hydrochlorofluorocarbon-122 (HCFC-122)
hydrochlorofluorocarbon-123 (HCFC-123)
hydrochlorofluorocarbon-124 (HCFC-124)
hydrochlorofluorocarbon-131 (HCFC-131)
hydrochlorofluorocarbon-132 (HCFC-132)
hydrochlorofluorocarbon-133 (HCFC-133)
hydrochlorofluorocarbon-141 (HCFC-141)
hydrochlorofluorocarbon-142 (HCFC-142)
hydrochlorofluorocarbon-151 (HCFC-151)
hydrochlorofluorocarbon-221 (HCFC-221)
hydrochlorofluorocarbon-222 (HCFC-222)
hydrochlorofluorocarbon-223 (HCFC-223)
hydrochlorofluorocarbon-224 (HCFC-224)
hydrochlorofluorocarbon-225 (HCFC-225)
hydrochlorofluorocarbon-226 (HCFC-226)
hydrochlorofluorocarbon-231 (HCFC-231)
hydrochlorofluorocarbon-232 (HCFC-232)
hydrochlorofluorocarbon-233 (HCFC-233)
hydrochlorofluorocarbon-234 (HCFC-234)
hydrochlorofluorocarbon-235 (HCFC-235)
hydrochlorofluorocarbon-241 (HCFC-241)
hydrochlorofluorocarbon-242 (HCFC-242)
hydrochlorofluorocarbon-243 (HCFC-243)
hydrochlorofluorocarbon-244 (HCFC-244)
hydrochlorofluorocarbon-251 (HCFC-251)
hydrochlorofluorocarbon-252 (HCFC-252)
hydrochlorofluorocarbon-253 (HCFC-253)
hydrochlorofluorocarbon-261 (HCFC-261)
hydrochlorofluorocarbon-262 (HCFC-262)
hydrochlorofluorocarbon-271 (HCFC-271)

1.3 SUBMITTALS

Government approval is required for submittals with a "G" designation; submittals not having a "G" designation are for Contractor Quality Control approval. When used, a designation following the "G" designation identifies the office that will review the submittal for the Government. The following shall be submitted in accordance with Section 01 33 00.00 33 SUBMITTAL PROCEDURES:

SD-01 Preconstruction Submittals

Preconstruction Survey; G (FEAD)

Solid Waste Management Plan and Permit; G (FEAD)

Transportation and disposal permits/licenses for hazardous waste; G (FEAD)

Transportation and disposal permits/licenses include certificates of landfill facility, treatment facility, and transpiration of hazardous/regulated waste.

Environmental Management Plan; G (FEAD)

Contractor Hazardous Material Inventory Log; G (FEAD)

SD-06 Test Reports

Laboratory Analysis; G (FEAD)

SD-11 Closeout Submittals

Some of the records listed below are also required as part of other submittals. For the "Records" submittal, maintain on-site a separate three-ring Environmental Records binder and submit at the completion of the project. Make separate parts to the binder corresponding to each of the applicable sub items listed below.

Disposal Documentation for Hazardous and Regulated Waste; G (FEAD)

Disposal documentation includes certificates of landfill facility, treatment facility, and transpiration of hazardous/regulated waste. And completed signed hazardous/regulated waste manifest.

Waste determination documentation; G (FEAD)

Bill of lading for regulated solid waste; G (FEAD)

Contractor Hazardous Material Inventory Log; G (FEAD)

1.4 ENVIRONMENTAL PROTECTION REQUIREMENTS

Provide and maintain, during the life of the contract, environmental protection as defined. Plan for and provide environmental protective measures to control pollution that develops during normal construction practice. Plan for and provide environmental protective measures required to correct conditions that develop during the construction of permanent or temporary environmental features associated with the project. Comply with JEGS, station requirements, COMFLEACT YOKOSUKA INST 5090.1) and local regulations pertaining to the environment, including water, air, solid waste, hazardous waste and substances, oily substances, and noise pollution.

The Contractor may be required to promptly conduct tests and procedures for the purpose of assessing whether construction operations are in compliance with Applicable Environmental Laws. Analytical work shall be done by

qualified laboratories; and where required by law, the laboratories shall be certified.

1.4.1 Environmental Compliance Assessment Training and Tracking System (ECATTS)

The QC Manager is responsible for environmental compliance on projects unless an Environmental Manager is named. The QC Manager (and alternative QC Manager) or Environmental Manager shall complete ECATTS training prior to starting respective portions of on-site work under this contract. If personnel changes occur for any of these positions after starting work, replacement personnel shall complete ECATTS training within 14 days of assignment to the project.

Submit an ECATTS certificate of completion for personnel who have completed the required "Environmental Compliance Assessment Training and Tracking System (ECATTS)" training. This training is web-based and can be accessed from any computer with Internet access using the following instructions.

Register for NAVFAC Environmental Compliance Training and Tracking System, by logging on to http://navfac.ecatts.com/. Obtain the password for registration from the Contracting Officer.

This training has been structured to allow contractor personnel to receive credit under this contract and also to carry forward credit to future contracts. Contractors shall ensure that the QC Manager (and alternate QC Manager) or Environmental Manager review their training plans for new modules or updated training requirements prior to beginning work. Some training modules are tailored for specific State regulatory requirements; therefore, Contractors working in multiple states will be requires to re-take modules tailored to the state where the contract work is being performed.

ECATTS is available for use by all contractor and subcontractor personnel associated with this project. These other personnel are encouraged (but not required) to take the training and may do so at their discretion.

1.4.2 Conformance with the Environmental Management System

The Contractor shall perform work under this contract consistent with the policy and objectives identified in the installation's Environmental Management System (EMS). The Contractor shall perform work in a manner that conforms to objectives and targets, environmental programs and operational controls identified by the EMS. The Contractor will provide monitoring and measurement information as necessary to address environmental performance relative to environmental, energy, and transportation management goals. In the event an EMS nonconformance or environmental noncompliance associated with the contracted services, tasks, or actions occurs, the Contractor shall take corrective and/or preventative actions. In addition, the Contractor shall ensure that its employees are aware of their roles and responsibilities under the EMS and how these EMS roles and responsibilities affect work performed under the contract.

The Contractor is responsible for ensuring that their employees receive applicable environmental and occupational health and safety training, and keep up to date on regulatory required specific training for the type of work to be conducted onsite. All on-site Contractor personnel, and their

subcontractor personnel, performing tasks that have the potential to cause a significant environmental impact shall be competent on the basis of appropriate education, training or experience. Upon contract award, the Contracting Officer's Representative will notify the installation's EMS coordinator to arrange EMS training. The installation's EMS coordinator shall identify training needs associated with environmental aspects and the EMS, and arrange training or take other action to meet these needs. The Contractor shall provide training documentation to the Contracting Officer. The EMS coordinator shall retain associated records.

1.5 QUALITY ASSURANCE

1.5.1 Preconstruction Survey

Perform a Preconstruction Survey of the project site with the Contracting Officer, and take photographs showing existing environmental conditions in and adjacent to the site. Submit a report for the record.

1.5.2 Environmental Brief

Attend an environmental brief to be included in the preconstruction meeting. Provide the following information: types, quantities, and use of hazardous materials that will be brought onto the activity; types and quantities of wastes/wastewater that may be generated during the contract. Discuss the results of the Preconstruction Survey at this time.

Prior to initiating any work on site, meet with the Contracting Officer and activity environmental staff to discuss the proposed Environmental Management Plan. Develop a mutual understanding relative to the details of environmental protection, including measures for protecting natural/cultural/historical resources, required reports, required permits, permit requirements, and other measures to be taken.

1.5.3 Contractor Employee Training Records

Prepare and maintain employee training records throughout the term of the contract meeting applicable station’s EMS requirements. The Contractor will ensure every employee completes a program of classroom instruction or on-the-job training that teaches them to perform their duties in a way that ensures compliance with JEGS, Japanese law, and local regulatory requirements. Submit these training records to the Contracting Officer at the conclusion of the project, unless otherwise directed.

PART 2 PRODUCTS

Not used.

PART 3 EXECUTION

3.1 ENVIRONMENTAL MANAGEMENT PLAN

Prior to initiating any work on site, the Contractor will meet with the Contracting Officer to discuss the proposed Environmental Protection Plan

and develop a mutual understanding relative to the details of environmental protection, including measures for protecting natural/cultural/historical resources, required reports, and other measures to be taken. The Environmental Management Plan will be submitted in the following format and shall include the elements specified below.

a. Description of the Environmental Protection Plan

(1) General overview and purpose

(a). A brief description of each specific plan required by environmental permit or elsewhere in this contract.

(b). The duties and level of authority assigned to the person(s) on the job site that oversee environmental compliance.

(c). A copy of any standard or project specific operating procedures that will be used to effectively manage and protect the environment on the project site.

(d). Communication and training procedures that will be used to convey environmental management requirements to contractor employees and subcontractors.

(e). Emergency contact information contact information (office phone number, cell phone number, and e-mail address).

(2) General site information

b. Management of Natural Resources

(1) Land resources

(2) Tree protection

(3) Replacement of damaged landscape features

(4) Temporary construction

(5) Stream crossings

(6) Fish and wildlife resources

(7) Wetland areas

c. Protection of Historical and Archaeological Resources

(1) Objectives

(2) Methods

d. Storm Water Management and Control

(1) Ground cover

(2) Erodible soils

(3) Temporary measures

(a) Mechanical retardation and control of runoff

(b) Vegetation and mulch

(4) Effective selection, implementation and maintenance of Best Management Practices (BMPs)

e. Protection of the Environment from Waste Derived from Contractor Operations

(1) Control and disposal of non-hazardous solid and sanitary waste

(2) Control and disposal of hazardous waste (Hazardous Waste Management Section)

This item will consist of the management procedures for all hazardous waste to be generated. The elements of those procedures will coincide with the Activity Hazardous Waste Management Plan. A copy of the Activity Hazardous Waste Management Plan will be provided by the Contracting Officer. As a minimum, include the following:

(a). Procedures to be employed to ensure a written waste determination is made for appropriate wastes which are to be generated;

(b). Sampling/analysis plan;

(c). Methods of hazardous waste accumulation/storage (i.e., in tanks and/or containers);

(d). Management procedures for storage, labeling, transportation, and disposal of waste (treatment of waste is not allowed unless specifically noted);

(e). Management procedures and regulatory documentation ensuring disposal of hazardous waste complies with Japanese laws, local government regulations and JEGS;

(f). Management procedures for recyclable hazardous materials such as lead-acid batteries, used oil, and the like;

(g). Used oil management procedures in accordance with local government regulations and JEGS;

(h). Pollution prevention\hazardous waste minimization procedures;

(i). Plans for the disposal of hazardous waste by permitted facilities;

(j). Procedures to be employed to ensure all required employee training records are maintained.

f. Prevention of Releases to the Environment

(1) Procedures to prevent releases to the environment

(2) Notifications in the event of a release to the environment

3.1.1 Environmental Management Plan Review

Fourteen days after the environmental protection meeting, submit the proposed Environmental Management Plan for further discussion, review, and approval. Commencement of work will not begin until the environmental management plan has been approved.

3.1.2 Permits

Obtain permits necessary to perform this project. No permits will be obtained by the contracting Officer.

3.2 PROTECTION OF NATURAL RESOURCES

Preserve the natural resources within the project boundaries and outside the limits of permanent work. Restore to an equivalent or improved condition upon completion of work. Confine construction activities to within the limits of the work indicated or specified.

When the Contractor encounter any species listed in Red Data Books, issued by Ministry of the Environment Japan or Prefectural Government, notify CHNRM (Cultural/Historical/Natural Resources Manager) in Environment Office at 243-5136 immediately through Contracting Officer.

Do not disturb fish and wildlife. Do not alter water flows or otherwise significantly disturb the native habitat adjacent to the project and critical to the survival of fish and wildlife, except as indicated or specified.

Except in areas to be cleared, do not remove, cut, deface, injure, or destroy trees or shrubs without the Contracting Officer's permission. Do not fasten or attach ropes, cables, or guys to existing nearby trees for anchorages unless authorized by the Contracting Officer. Where such use of attached ropes, cables, or guys is authorized, the Contractor will be responsible for any resultant damage.

Protect existing trees which are to remain and which may be injured, bruised, defaced, or otherwise damaged by construction operations. Remove displaced rocks from uncleared areas. By approved excavation, remove trees with 30 percent or more of their root systems destroyed. Remove trees and other landscape features scarred or damaged by equipment operations, and replace with equivalent, undamaged trees and landscape features. Obtain Contracting Officer's approval before replacement.

The Contracting Officer's approval is required before any equipment will be permitted to ford live streams. In areas where frequent crossings are required, install temporary culverts or bridges. Obtain Contracting Officer's approval prior to installation. Remove temporary culverts or bridges upon completion of work, and repair the area to its original condition.

3.2.1 Erosion and Sediment Control Measures

3.2.1.1 Protection of Excavated Soil

Protect excavated soil material from rain and wind erosions.

3.2.1.2 Burnoff

Burnoff of the ground cover is not permitted.

3.2.2 Storm water Drainage and Construction Dewatering

There will be no discharge of excavation ground water to the sanitary sewer, storm drains, or to the river without prior specific authorization of the Environmental Division in writing. Discharge of hazardous substances will not be permitted under any circumstances.

Construction site runoff will be prevented from entering any storm drain or the river directly by the use of straw bales or other method suitable to the Environmental Division. Contractor will provide erosion protection of the surrounding soils.

Construction Dewatering shall not be discharged to the sanitary sewer. If the construction dewatering is noted or suspected of being contaminated, it may only be released to the storm drain system if the discharge is specifically permitted. Authorization for any contaminated groundwater release shall be obtained in advance from the base Environmental Officer. Discharge of hazardous substances will not be permitted under any circumstances.

3.3 HISTORICAL AND ARCHAEOLOGICAL RESOURCES

If any cultural/historical artifacts/assets are discovered during work, notify the PWD Environmental Cultural Resources Manager through the Contracting Officer (243-5136), secure the discovery area, and continue to work around the secured area until further direction from the PWD Environmental Cultural Resources Manager through the Contracting Officer. If the items need to be temporarily removed, carefully protect them from disturbance, including weather conditions, unforeseen traffic, and pilfering. The PWD Environmental Cultural Resources Manager through the Contracting Officer will provide further direction/guidance on how to protect the items. The Government retains ownership and control over historical and archaeological resources.

3.4 SOLID WASTE MANAGEMENT PLAN AND PERMIT

Provide to the contracting officer written notification of the quantity of solid waste/ debris that is anticipated to be generated by construction. Include in the report the locations where varies types of waste will be disposed, turned in, or recycled.
Submit a copy of the applicable Japanese local permits and licenses for transportation, treatment, storage and disposal of solid waste (“Sangyou Haikibutsu”) by permitted facilities.

3.4.1 Solid Waste Management Report

Monthly the Contractor will submit a solid waste disposal/recycle management report to the Contracting Officer. For each waste, the report will state the classification (using the definitions provided in this section), method

of dispose/recycle, amount, location, and name of the business receiving the solid waste.

The Contractor shall submit all waste disposal manifests.
For each solid waste retained by the Contractor for his own use, the Contractor will submit on the solid waste disposal report the information previously described in this paragraph. Prices paid or received will not be reported to the Contracting Officer unless required by other provisions or specifications of this Contract or public law.

3.4.2 Control and Management of Solid Wastes

Pick up solid wastes, and place in covered containers which are regularly emptied. Do not prepare or cook food on the project site. Prevent contamination of the site or other areas when handling and disposing of wastes. At project completion, leave the areas clean. Recycling is encouraged and can be coordinated with the Contracting Officer and the activity recycling coordinator. Remove all solid waste (including non-hazardous debris) from Government property and dispose off-site at an approved landfill. Solid waste disposal off-site must comply with most stringent JEGS, Japanese law, local regulations, and codes.

Manage spent hazardous material used in construction, including but not limited to, aerosol cans, waste paint, cleaning solvents, contaminated brushes, and used rags, as per Japanese law, local prefectural regulations, and JEGS.

Submit Disposal manifests and QRP (Qualifying Recycling Program) Tonnage form and manifest as specified in Section 01 74 19 “Construction and Demolition Waste Management”.
Off-base disposal of non-hazardous solid waste/debris: A legible copy of Waste Disposal Manifest (a copy of receipt "E") with the completion date of landfill, and CFAY Solid Waste Tonnage Report with filling in total of accurate weight unit (Kg) and monetary unit (Both Dollar and Yen with the timely exchange rate) according to be indicated in the report MUST BE submitted Solid Waste Manager, CFAY PWD Environmental.

3.5 WASTE DETERMINATION DOCUMENTATION

Complete a waste determination form (provided at the pre-construction conference) for all contractor derived wastes to be generated. Base the waste determination upon either a constituent listing from the manufacturer used in conjunction with consideration of the process by which the waste was generated, or laboratory analysis (Material Safety Data Sheets (MSDS) by themselves are not adequate). Attach all support documentation to the Waste Determination form. As a minimum, a Waste Determination form must be provided for the following wastes (this listing is not all inclusive): oil and latex based painting and caulking products, solvents, adhesives, aerosols, petroleum products, and all containers of the original materials.

3.6 CONTRACTOR HAZARDOUS MATERIAL INVENTORY LOG

Submit the "Contractor Hazardous Material Inventory Log"(found at: http://www.wbdg.org/ccb/NAVGRAPH/graphtoc.pdf), which provides information required by (EPCRA Sections 312 and 313) along with corresponding Material Safety Data Sheets (MSDS) to the Contracting Officer at the start and at the end of construction (30 days from final acceptance), and update no later

than January 31 of each calendar year during the life of the contract. Documentation for any spills/releases, environmental reports or off-site transfers may be requested by the Contracting Officer.

3.6.1 Disposal Documentation for Regulated Waste

Manifest, pack, ship and dispose of Regulated Waste that is generated as a result of construction in accordance with the generating facilities generator status under the Recourse Conservation and Recovery Act. Contact the Contracting Officer for the facility RCRA identification number that is to be used on each manifest.

Submit a copy of the applicable permit(s), manifest(s), or license(s) for transportation, treatment, storage, and disposal of hazardous and regulated waste by permitted facilities. Hazardous or toxic waste manifest must be reviewed, signed, and approved by the Navy before the Contractor may ship waste. To obtain specific disposal instructions the Contractor must coordinate with the Activity environmental office.

3.7 POLLUTION PREVENTION/HAZARDOUS WASTE MINIMIZATION

Minimize the use of hazardous materials and the generation of hazardous waste. Include procedures for pollution prevention/ hazardous waste minimization in the Hazardous Waste Management Section of the Environmental Protection Plan. Consult with the activity Environmental Office for suggestions and to obtain a copy of the installation's pollution prevention/hazardous waste minimization plan for reference material when preparing this part of the plan. If no written plan exists, obtain information by contacting the Contracting Officer. Describe the types of the hazardous materials expected to be used in the construction when requesting information.

3.8 HAZARDOUS MATERIALS AND HAZARDOUS WASTES PROHIBITIONS FOR YOKOSUKA

No hazardous materials shall be abandoned on government property. The Contractor shall transport and turn in hazardous wastes excluding asbestos waste to Bldg 1822 and call 243-5777 for Government’s direction with an established Job Order Number (JON) from the contracting officer/project manager. No hazardous material shall be brought onto the government property that are not directly related to requirements for the performance of this contract. The government is not responsible for the disposals of Contractor's wastes/materials brought on the job site which are not required in the performance of this contract. The intent of this provision is to dispose hazardous wastes that is defined in this section, is generated as part of this contract, and is existed within the boundary of the Contract limits and not brought in from offsite by the Contractor. Incidental wastes used to support this contract including, but not limited to aerosol cans, waste paints, cleaning solvents, contaminated brushes, rags, clothing, Personal Protection Equipments (PPEs), etc. are considered as hazardous wastes.

3.9 HAZARDOUS MATERIALS AND HAZARDOUS WASTES PROHIBITION FOR IKEGO, NEGISHI, TSURUMI, AND REMOTE NAVY BASES

No hazardous materials and hazardous waste shall be abandoned on government property. The Contractor shall transport and turn in hazardous wastes that exist in the Government facility, excluding asbestos waste, to designated

Hazardous Waste Facility on Base in accordance with Government’s direction and with an established Job Order Number (JON) from the contracting officer/project manager. No hazardous material shall be brought onto the government properties that are not directly related to requirements for the performance of this contract. The government is not responsible for the disposals of Contractor's wastes/materials brought on the job site which are not required in the performance of this contract. The intent of “hazardous wastes that exist in the Government facility” is hazardous wastes that is generated as part of this contract, and is existed within the boundary of the Contract limits and not brought in from offsite by the Contractor. The disposal of incidental materials used to accomplish the work including, but not limited to aerosol cans, waste paint, cleaning solvents, contaminated brushes, rags, clothing, etc. are the responsibility of the Contractor, except the incidental hazardous waste specified in elsewhere of this contract.

3.10 HAZARDOUS MATERIAL MANAGEMENT

No hazardous material shall be brought onto government property that does not directly relate to requirements for the performance of this contract.

Include hazardous material control procedures in the Safety Plan. Address procedures and proper handling of hazardous materials, including the appropriate transportation requirements. Submit a MSDS and estimated quantities to be used for each hazardous material to the Contracting Officer prior to bringing the material on base. Typical materials requiring MSDS and quantity reporting include, but are not limited to, oil and latex based painting and caulking products, solvents, adhesives, aerosol, and petroleum products. At the end of the project, provide the Contracting Officer with the maximum quantity of each material that was present at the site at any one time, the dates the material was present, the amount of each material that was used during the project, and how the material was used. Ensure that hazardous materials are utilized in a manner that will minimize the amount of hazardous waste that is generated. Ensure that all containers of hazardous materials have NFPA labels or their equivalent. Keep copies of the MSDS for hazardous materials on site at all times and provide them to the Contracting Officer at the end of the project. Certify that all hazardous materials removed from the site are hazardous materials and do not meet the definition of hazardous waste per JEGS.

3.10.1 Licenses and Permits for Construction Waste

Obtain necessary licenses and permits in conjunction with treatment and disposition of construction wastes defined in all applicable Japanese laws and prefectural regulations; and submit the licenses and/or permits to the Contracting Officer.

3.11 PETROLEUM PRODUCTS

a. Petroleum Products Used For Contractor’s Own Equipment And Motor Vehicles

Conduct the fueling and lubricating of equipment and motor vehicles in a manner that protects against spills and evaporation. Manage all used oil generated on site in accordance with JEGS. Determine if any used oil generated while on-site exhibits a characteristic of hazardous waste. Used oil containing solvents will be considered a hazardous waste as defined

Japanese laws and local Government regulation; and disposed of at Contractor's expense. Used oil mixed with a hazardous waste will also be considered a hazardous waste.

b. Petroleum Product Used or Remained In Existing Facility

Turn-in petroleum products generated from existing facilities which is defined as a hazardous waste. Turn-in to Government’s storage facility in accordance with Section 01 74 19.00 33 “Construction and Demolition Waste Management”.

3.11.1 Oily and Hazardous Substances

Prevent oil or hazardous substances from entering the ground, drainage areas, or navigable waters.
Spill preventive measures shall be taken. A secondary containment system shall be applied. Appropriate and compatible spill kits shall be readily available at a job site. Further guidance on spill prevention measures is available; contact Station Environmental Office at 243-4886/3186.

3.12 FUEL TANKS

If temporary petroleum products and lubricants containing tanks/containers are to be stored at a job site, spill preventive measures shall be taken. A secondary containment system shall be applied. Appropriate and compatible spill kits shall be readily available at a job site. Further guidance on spill prevention measures is available; contact Station’s Environmental Office PRY4 at 243-4886/3186.

3.13 RELEASES/SPILLS OF OIL AND HAZARDOUS SUBSTANCES

Exercise due diligence to prevent, contain, and respond to spills of hazardous material, hazardous substances, hazardous waste, sewage, regulated gas, petroleum, lubrication oil, and other substances regulated by environmental law. Maintain spill cleanup equipment and materials at the work site. In the event of a spill, take prompt, effective action to stop, contain, curtail, or otherwise limit the amount, duration, and severity of the spill/release. In the event of any releases of oil and hazardous substances, chemicals, or gases; immediately (within 15 minutes) notify the Activity Fire Department at 911, the activity's Command Duty Officer, and the Contracting Officer. If the contractor's response is inadequate, the Navy may respond. If this should occur, the contractor will be required to reimburse the government for spill response assistance and analysis.

The Contractor is responsible for verbal and written notifications as required by the JEGS, local regulations and Navy Instructions. Spill response will be in accordance with JEGS and spill response procedures. Contain and clean up these spills without cost to the Government. If Government assistance is requested or required, the Contractor will reimburse the Government for such assistance. Provide copies of the written notification and documentation that a verbal notification was made within 20 days.

Maintain spill cleanup equipment and materials at the work site. Clean up all hazardous and non-hazardous waste spills. The Contractor shall reimburse the government for all material, equipment, and clothing generated during any spill cleanup. The Contractor shall reimburse the government for all

costs incurred including sample analysis materials, equipment, and labor if the government must initiate its own spill cleanup procedures, for Contractor responsible spills, when:

a. The Contractor has not begun spill cleanup procedure within one hour of spill discovery/occurrence, or

b. If, in the government's judgment, the Contractor's spill cleanup is not adequately abating life threatening situation and/or is a threat to any body of water or environmentally sensitive areas.

3.14 DISPOSAL OF HAZARDOUS WASTES

3.14.1 Hazardous Waste/Debris Management

The Contractor shall not dispose of any materials which classified as hazardous waste.
Off base asbestos containing hazardous wastes are allowed with Environment Office approval (PRY 4 or PRY 41) upon notification to PRY 4 or PRY 41.

Identify all construction activities which will generate hazardous waste/debris. Provide a documented waste determination for all resultant waste streams.

Hazardous waste/debris that brought in from offsite by the Contractor will be identified, labeled, handled, stored, and disposed of in accordance with all Japanese laws, JEGS and prefectural regulations.

Hazardous waste generated within the confines of Government facilities will be identified as being generated by the Government and will be labeled, handled, stored, and transport to designated Government facility specified in Section 01 74 19 “Construction and Demolition Waste Management”.

Hazardous waste will also be managed in accordance with the approved Hazardous Waste Management Section of the Environmental Protection Plan. Store hazardous wastes in approved containers in accordance with JEGS. Prior to removal of any hazardous waste from Government property, all hazardous waste manifests must be signed by waste transporter and disposal facility. If hazardous wastes are turned into the Government, submit Hazardous Waste turn-in document instead of manifest. No hazardous waste will be brought onto Government property. Provide to the Contracting Officer a copy of waste determination documentation for any solid waste streams that have any potential to be hazardous waste or contain any chemical constituents listed in JEGS. For hazardous wastes spills, verbally notify the Contracting Officer immediately.

3.14.1.1 Materials to be removed

If materials to be removed, that may be hazardous waste or hazardous to human health during construction operations is encountered, stop that portion of work and immediately notify the Contracting Officer and request sampling to the Government. The Government will sample the material to determine if it is HW. Within 35 calendar days the Government will determine if the material is hazardous. If material is not hazardous or poses no danger, the Government will direct the Contractor to proceed without change. If material is hazardous and handling of the material is necessary to accomplish the work, the Government may, subject to

SECTION 01 58 00.00 33

PROJECT IDENTIFICATION

PART 1 GENERAL

1.1 REFERENCES

The publications listed below form a part of this specification to the extent referenced. The publications are referred to within the text by the basic designation only. The latest version of the publication at time of award shall be used.

JAPANESE AGRICULTURAL STANDARD (JAS) PUBLICATIONS

SP-86	Special Plywood
SL-86	Sawn Lumber

JAPANESE INDUSTRIAL STANDARDS (JIS)

A 5508	Nails

AMERICAN WOOD-PRESERVERS' ASSOCIATION (AWPA)

AWPA C1	All Timber Products – Preservative Treatment by Pressure Processes
AWPA C2	Lumber, Timber, Bridge Ties and Mine Ties - Preservative Treatment by Pressure Processes

1.2 SUBMITTALS

Government approval is required for submittals with a "G" designation; submittals not having a "G" designation are for Contractor Quality Control approval. When used, a designation following the "G" designation identifies the office that will review the submittal for the Government. The following shall be submitted in accordance with Section 01 33 00.00 33 SUBMITTAL PROCEDURES:

SD-02 Shop Drawings

Preliminary drawing indicating layout and text content; G (FEAD)

1.3 PROJECT SIGN

Prior to initiating any work on site, provide one project identification sign at the location designated. Construct the sign in accordance with project sign detail attached at the end of this section. Maintain sign throughout the life of the project. Upon completion of the project, remove the sign from the site.

1.3.1 Project Identification Signboard (Navy)

A project identification signboard shall be provided in accordance with attached Plates -1, -2, -3, and -4 at the end of this Section. Provide preliminary drawing indicating layout and text content. The signboard shall be provided at a conspicuous location on the job site where directed by the Contracting Officer. The dimensions on the sketch can be proportional sized to fit on a single sheet of Japanese plywood (910 x 1820 mm).

The contractor shall secure the signboard at the job site using a method to minimize impact to areas or surfaces not included in the construction. Suggested method to include the support details in the attachment or utilizing the work site perimeter fence.

a. The field of the sign shall consist of Grade B-B medium density overlaid exterior plywood or JAS grade Type-1 “1-rui” waterproof exterior plywood. Lumber shall be B or better Southern pine, pressure-resrvative treated in accordance with AWPA C1 and AWPA C2 or JAS sawn lumber no-knot “Mubushi” grade. Nails shall be of flat head galvanized steel screw nail conforming to JIS A 5508.

b. The entire signboard and supports shall be given one coat of exterior alkyd primer and two coats of exterior alkyd enamel paint. The lettering and sign work shall be performed by a skilled sign painter using paint known in the trade as bulletin colors. The colors, lettering sizes, and lettering styles shall be as indicated. Where preservative-treated lumber is required, utilize only cured pressure-treated wood which has had the chemicals leached from the surface of the wood prior to painting.

c. Use spray applied automotive quality high gloss acrylic white enamel paint as background for the NAVFAC logo. NAVFAC logo shall be an applied 2 millimeter film sticker/decal with either transparent or white background or paint the logo by stencil onto the sign. The weather resistant sticker/decal film shall be rated for a minimum of 2-year exterior vertical exposure. The self-adhering sticker shall be mounted to the sign with pressure sensitive, permanent acrylic adhesive. Shop cut sticker/decal to rectangular shape and provide pull-off backing sheet on adhesive side of design sticker for shipping.

d. Sign paint colors (manufacturer's numbers/types listed below for color identification only)

   (1) Blue = To match dark blue color in the NAVFAC logo.

   (2) White = To match Brilliant White color in the NAVFAC logo.

e. NAVFAC logo must retain proportions and design integrity. NAVFAC logos in electronic format may be obtained from the NAVFAC web portal via the follwoing link:

   https://portal.navfac.navy.mil/portal/page/portal/navfac/navfac_formedia_pp/navfac_presskits_pp

   Use the following to choose color values for the paint to be used:

   (1) Dark Blue = equivalent to CMYK values 100, 72, 0, 8 .

   (2) Light Blue = equivalent to CMYK values 69, 34, 0, 0.

(3) Cyan = equivalent to CMYK values 100, 9, 0, 6.

(4) Yellow = equivalent to CMYK values 0.9,94, 0.

PART 2 PRODUCTS

Not used.

PART 3 EXECUTION

Not used.

-- End of Section --

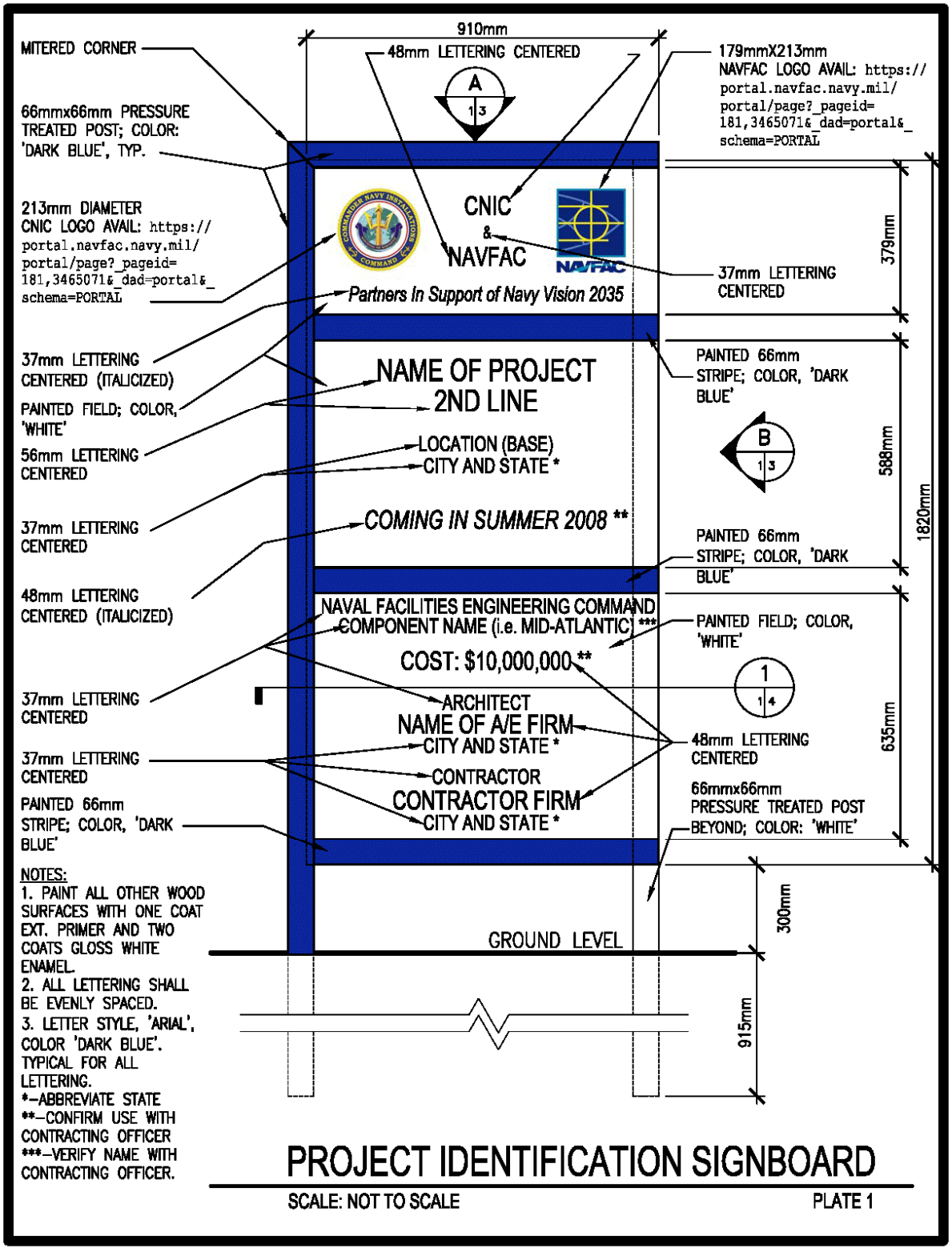
910mm
48mm LETTERING CENTERED
MITERED CORNER
66mmx66mm PRESSURE TREATED POST; COLOR: 'DARK BLUE', TYP.
213mm DIAMETER CNIC LOGO AVAIL: https://portal.navfac.navy.mil/portal/page?_pageid=181,3465071&_dad=portal&_schema=PORTAL
37mm LETTERING CENTERED (ITALICIZED)
PAINTED FIELD; COLOR, 'WHITE'
56mm LETTERING CENTERED
37mm LETTERING CENTERED
48mm LETTERING CENTERED (ITALICIZED)
37mm LETTERING CENTERED
37mm LETTERING CENTERED
PAINTED 66mm STRIPE; COLOR, 'DARK BLUE'
179mmX213mm NAVFAC LOGO AVAIL: https://portal.navfac.navy.mil/portal/page?_pageid=181,3465071&_dad=portal&_schema=PORTAL
A
1 3
CNIC
&
NAVFAC
Partners In Support of Navy Vision 2035
37mm LETTERING CENTERED
379mm
NAME OF PROJECT
2ND LINE
LOCATION (BASE)
CITY AND STATE *
COMING IN SUMMER 2008 **
B
1 3
588mm
1820mm
PAINTED 66mm STRIPE; COLOR, 'DARK BLUE'
NAVAL FACILITIES ENGINEERING COMMAND
COMPONENT NAME (i.e. MID-ATLANTIC) ***
COST: $10,000,000 **
PAINTED FIELD; COLOR, 'WHITE'
1
1 4
ARCHITECT
NAME OF A/E FIRM
CITY AND STATE *
CONTRACTOR
CONTRACTOR FIRM
CITY AND STATE *
48mm LETTERING CENTERED
635mm
66mmx66mm PRESSURE TREATED POST BEYOND; COLOR: 'WHITE'
PAINTED 66mm STRIPE; COLOR, 'DARK BLUE'
GROUND LEVEL
300mm
915mm
NOTES:
1. PAINT ALL OTHER WOOD SURFACES WITH ONE COAT EXT. PRIMER AND TWO COATS GLOSS WHITE ENAMEL.
2. ALL LETTERING SHALL BE EVENLY SPACED.
3. LETTER STYLE, 'ARIAL', COLOR 'DARK BLUE'. TYPICAL FOR ALL LETTERING.
*–ABBREVIATE STATE
**–CONFIRM USE WITH CONTRACTING OFFICER
***–VERIFY NAME WITH CONTRACTING OFFICER.
PROJECT IDENTIFICATION SIGNBOARD
SCALE: NOT TO SCALE
PLATE 1

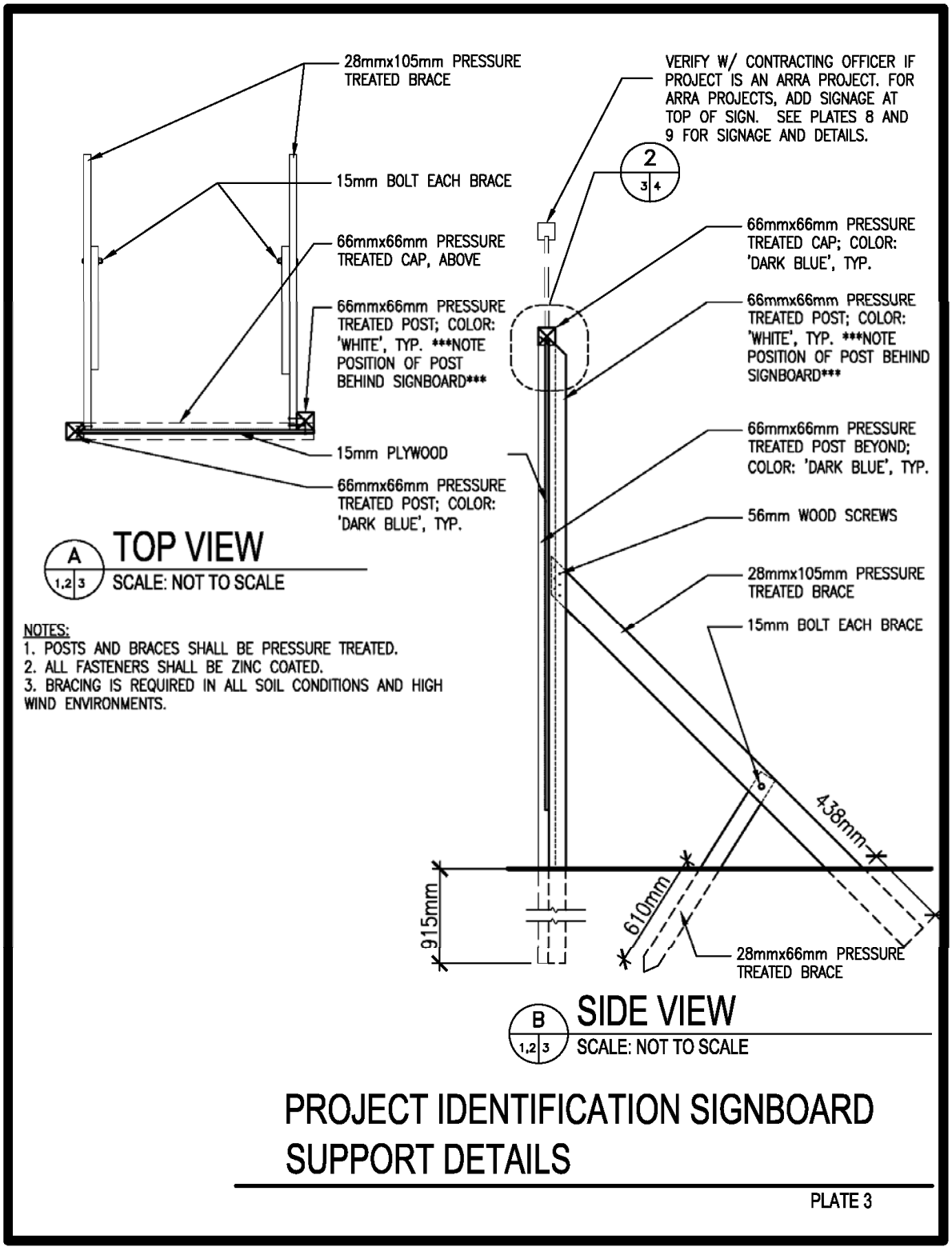
28mmx105mm PRESSURE TREATED BRACE
15mm BOLT EACH BRACE
66mmx66mm PRESSURE TREATED CAP, ABOVE
66mmx66mm PRESSURE TREATED POST; COLOR: 'WHITE', TYP. ***NOTE POSITION OF POST BEHIND SIGNBOARD***
15mm PLYWOOD
66mmx66mm PRESSURE TREATED POST; COLOR: 'DARK BLUE', TYP.
A 1,2 3 TOP VIEW
SCALE: NOT TO SCALE
NOTES:
1. POSTS AND BRACES SHALL BE PRESSURE TREATED.
2. ALL FASTENERS SHALL BE ZINC COATED.
3. BRACING IS REQUIRED IN ALL SOIL CONDITIONS AND HIGH WIND ENVIRONMENTS.
VERIFY W/ CONTRACTING OFFICER IF PROJECT IS AN ARRA PROJECT. FOR ARRA PROJECTS, ADD SIGNAGE AT TOP OF SIGN. SEE PLATES 8 AND 9 FOR SIGNAGE AND DETAILS.
2 3 4
66mmx66mm PRESSURE TREATED CAP; COLOR: 'DARK BLUE', TYP.
66mmx66mm PRESSURE TREATED POST; COLOR: 'WHITE', TYP. ***NOTE POSITION OF POST BEHIND SIGNBOARD***
66mmx66mm PRESSURE TREATED POST BEYOND; COLOR: 'DARK BLUE', TYP.
56mm WOOD SCREWS
28mmx105mm PRESSURE TREATED BRACE
15mm BOLT EACH BRACE
438mm
915mm
610mm
28mmx66mm PRESSURE TREATED BRACE
B 1,2 3 SIDE VIEW
SCALE: NOT TO SCALE
PROJECT IDENTIFICATION SIGNBOARD SUPPORT DETAILS
PLATE 3

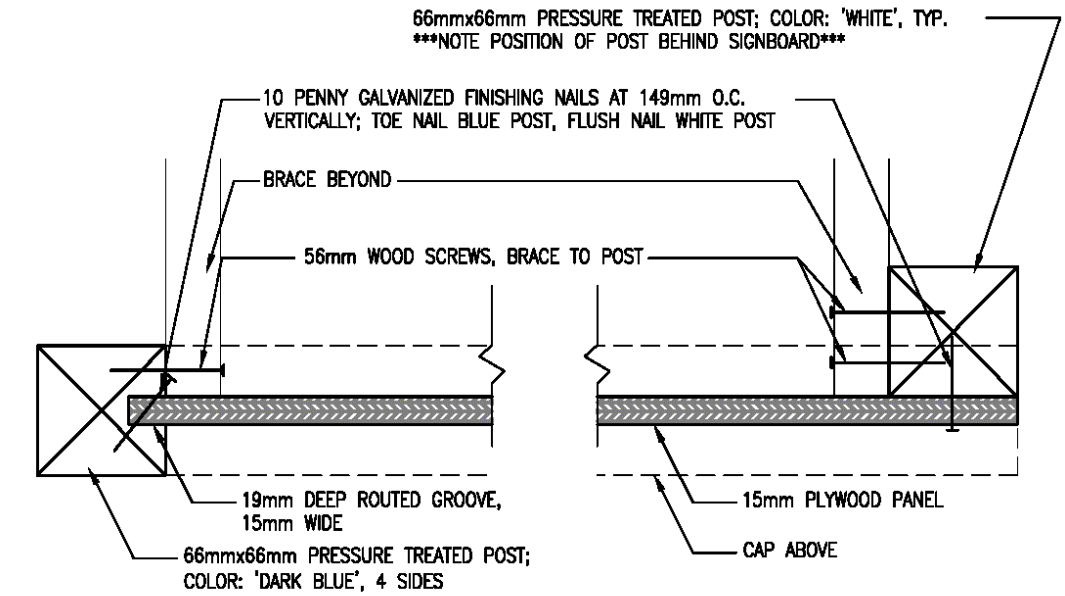

1 1,2,4 PLAN SECTION

SCALE: NOT TO SCALE

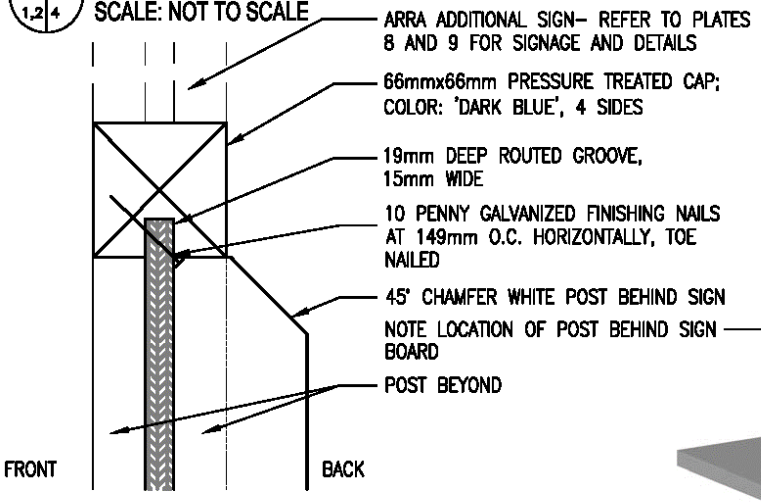

2 1,2,4 SECTION AT TOP

SCALE: NOT TO SCALE

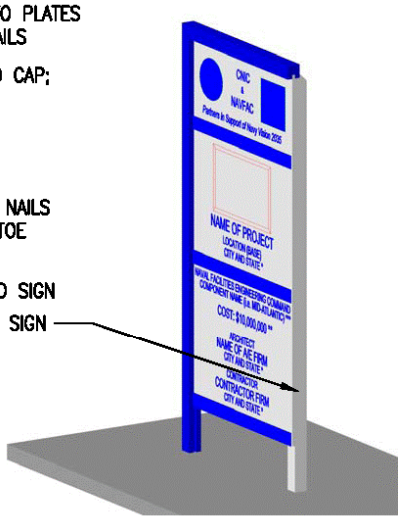

3 2,4 ISO VIEW

SCALE: NOT TO SCALE

PROJECT IDENTIFICATION SIGNBOARD SECTIONS

PLATE 4

SECTION 01 74 19.00 33

CONSTRUCTION AND DEMOLITION WASTE MANAGEMENT

PART 1 GENERAL

1.1 REFERENCES

The publications listed below form a part of this specification to the extent referenced. The publications are referred to within the text by the basic designation only. The latest version of the publication at time of award shall be used.

ASTM INTERNATIONAL (ASTM)

ASTM E 1609	Development and Implementation of a Pollution Prevention Program

Headquarters, US Forces Japan, Department of Defense (DOD)

JEGS	(2008 September) Japan Environmental Governing Standards

1.2 GOVERNMENT POLICY

Government policy is to apply sound environmental principles in the construction and use of facilities. As part of the implementation of that policy the Contractor shall: (1) practice efficient waste management when sizing, cutting, and installing products and materials and (2) use all reasonable means to divert construction and demolition waste from landfills and incinerators and to facilitate their recycling or reuse.

a. Hazardous Waste/Material

Unless otherwise specified or indicated, all hazardous waste/material defined in JEGS shall be turned in to the Government, Bldg 1822. Contact CFAY PWD Environment before transport.

b. Scrap Metal

All recyclable scrap metals shall remain the property of the Government unless indicated, and deliver to the recycling Facility 1810. Before delivering the scrap metal, submit the attached form “CONTRACTOR TURN-IN OF RIPPED OUT MATERIAL” filled with blanks and contact to Solid Waste/QRP dept, CFAY PWD Environment Office. Scrap metals include pipes, metal supports, valves, radiators, ducts, conduits, electrical cables, metal siding, metal roofing, handrails, metals with firmly adhered LBP, used welding rods, and structural steels. Do not include any thermal insulation or PCB containing items in turn-in scrap metals.

1.3 MANAGEMENT

Develop and implement a waste management program in accordance with Japanese laws and local government regulations and as specified. Take a pro-active, responsible role in the management of construction and demolition waste and require all subcontractors, vendors, and suppliers to participate in the

effort. Construction and demolition waste includes products of demolition or removal, excess or unusable construction materials, packaging materials for construction products, and other materials generated during the construction process but not incorporated into the work. In the management of waste consideration shall be given to the availability of viable markets, the condition of the material, the ability to provide the material in suitable condition and in a quantity acceptable to available markets, and time constraints imposed by internal project completion mandates. The Contractor is responsible for implementation of any special programs involving rebates or similar incentives related to recycling of waste. Revenues or other savings obtained for salvage, or recycling accrue to the Contractor. Appropriately permit firms and facilities used for recycling, reuse, and disposal for the intended use to the extent required by federal, state, and local regulations. Also, provide on-site instruction of appropriate separation, handling, recycling, salvage, reuse, and return methods to be used by all parties at the appropriate stages of the project.

1.4 SUBMITTALS

Government approval is required for submittals with a "G" designation; submittals not having a "G" designation are for Contractor Quality Control approval. When used, a designation following the "G" designation identifies the office that will review the submittal for the Government. The following shall be submitted in accordance with Section 01 33 00.00 33 SUBMITTAL PROCEDURES:

SD-01 Preconstruction Submittals

Waste Management Plan; G (FEAD)

SD-11 Closeout Submittals

Records with manifests; G (FEAD)

1.5 MEETINGS

Conduct Construction Waste Management meetings. After award of the Contract and prior to commencement of work, schedule and conduct a meeting with the Contracting Officer to discuss the proposed Waste Management Plan and to develop a mutual understanding relative to the details of waste management. The requirements for this meeting may be fulfilled during the coordination and mutual understanding meeting outlined in Section 01 45 20 NAVFAC QUALITY CONTROL. At a minimum, environmental and waste management goals and issues shall be discussed at the following additional meetings:

a. Preconstruction meeting.

b. Regular QC meetings.

c. Work safety meetings.

1.6 WASTE MANAGEMENT PLAN

A waste management plan shall be submitted within 15 days after contract award and prior to initiating any site preparation work. A sample format is attached at end of this section. The plan shall be approved by Environment

Office (contact to the Solid Waste/QRP dept) via FEAD and shall include the following:

a. Name of individuals on the Contractor's staff responsible for waste prevention and management.

b. Actions that will be taken to reduce solid waste generation, including coordination with subcontractors to ensure awareness and participation.

c. Description of the regular meetings to be held to address waste management.

d. Description of the specific approaches to be used in recycling/reuse of the various materials generated, including the areas on site and equipment to be used for processing, sorting, and temporary storage of wastes.

e. Characterization, including estimated types and quantities, of the waste to be generated.

f. Name of landfill and/or incinerator to be used and the estimated costs for use, assuming that there would be no salvage or recycling on the project.

g. Identification of local and regional reuse programs. Include the name, location, and phone number for each reuse facility to be used, and provide a copy of the permit or license for each facility.

h. List of specific waste materials that will be salvaged for resale, salvaged and reused on the current project, salvaged and stored for reuse on a future project, or recycled. Recycling facilities that will be used shall be identified by name, location, and phone number, including a copy of the permit or license for each facility.

i. Identification of materials that cannot be recycled/reused with an explanation or justification, to be approved by the Contracting Officer.

j. Description of the means by which any waste materials identified in item (h) above will be protected from contamination.

k. Description of the means of transportation of the recyclable materials (whether materials will be site-separated and self-hauled to designated centers, or whether mixed materials will be collected by a waste hauler and removed from the site).

l. Anticipated net cost savings determined by subtracting Contractor program management costs and the cost of disposal from the revenue generated by sale of the materials and the incineration and/or landfill cost avoidance.

m. If the Contractor store construction waste at the contractor’s premises to accumulate the waste until adequate volume to transport to a treatment facility, submit a copy of Waste Accumulation Point Registration which is submitted to the local government where the contractor’s premises located.

Revise and resubmit Plan as required by the Contracting Officer. Approval of Contractor's Plan will not relieve the Contractor of responsibility for

compliance with applicable environmental regulations or meeting project cumulative waste diversion requirement. Distribute copies of the Waste Management Plan to each subcontractor, the Quality Control Manager, and the Contracting Officer.

1.7 RECORDS

Records shall be maintained to document the quantity of waste generated; the quantity of waste diverted through sale, reuse, or recycling; and the quantity of waste disposed by landfill or incineration. Quantities may be measured by weight or by volume, but must be consistent throughout. List each type of waste separately noting the disposal or diversion date. Identify the landfill, recycling center, waste processor, or other organizations used to process or receive the solid waste. Provide explanations for any waste not recycled or reused. With each application for payment, submit updated documentation for solid waste disposal and diversion, and submit manifests, weight tickets, receipts, and invoices specifically identifying the project and waste material. The records shall be made available to the Contracting Officer during construction, and a copy of the records with manifests and receipt shall be delivered to the Contracting Officer and Environmental Office upon completion of the construction. A sample form is attached end of this Section.

1.8 COLLECTION

Separate, store, protect, and handle at the site identified recyclable and salvageable waste products in a manner that maximizes recyclability and salvagability of identified materials. Provide the necessary containers, bins and storage areas to facilitate effective waste management and clearly and appropriately identify them. Provide materials for barriers and enclosures around recyclable material storage areas which are nonhazardous and recyclable or reusable. Locate out of the way of construction traffic. Provide adequate space or pick-up and delivery and convenience to subcontractors. Recycling and waste bin areas are to be kept neat and clean, and recyclable materials shall be handled to prevent contamination of materials from incompatible products and materials. Clean contaminated materials prior to placing in collection containers. Use cleaning materials that are nonhazardous and biodegradable. Handle hazardous waste and hazardous materials in accordance with applicable regulations and coordinate with Section 01 57 19.00 33 TEMPORARY ENVIRONMENTAL CONTROLS. Separate materials by one of the following methods:

1.8.1 Source Separated Method.

Waste products and materials that are recyclable shall be separated from trash and sorted as described below into appropriately marked separate containers and then transported to the respective recycling facility for further processing. Deliver materials in accordance with recycling or reuse facility requirements (e.g., free of dirt, adhesives, solvents, petroleum contamination, and other substances deleterious to the recycling process). Separate materials into the following category types as appropriate to the project waste and to the available recycling and reuse programs in the project area:

a. Land clearing debris.

b. Asphalt.

c. Concrete and masonry.

d. Metal (e.g. banding, stud trim, ductwork, piping, re-bar, roofing, other trim, steel, iron, galvanized, stainless steel, aluminum, copper, zinc, lead brass, bronze).

(1) Ferrous.

(2) Non-ferrous.

e. Wood (ferrous nails and staples allowed).

f. Debris.

g. Glass (colored glass shall be followed by recycling facility’s capability).

h. Paper.

(1) Bond.

(2) Newsprint.

(3) Cardboard and paper packaging materials.

i. Plastic. (separate method shall be followed by recycling facility’s capability)

(1) Type 1: Polyethylene Terephthalate (PET, PETE).

(2) Type 2: High Density Polyethylene (HDPE).

(3) Type 3: Vinyl (Polyvinyl Chloride or PVC).

(4) Type 4: Low Density Polyethylene (LDPE).

(5) Type 5: Polypropylene (PP).

(6) Type 6: Polystyrene (PS).

(7) Type 7: Other. Use of this code indicates that the package in question is made with a resin other than the six listed above, or is made of more than one resin listed above, and used in a multi-layer combination.

j. Non-asbestos gypsum.

k. Non-hazardous paint and paint cans.

l. Carpet.

m. Non-asbestos ceiling tiles.

n. Non-asbestos insulation.

o. Beverage containers.

1.8.2 Co-Mingled Method.

Waste products and recyclable materials shall be placed into a single container and then transported to a recycling facility where the recyclable materials are sorted and processed.

1.8.3 Other Methods.

Other methods proposed by the Contractor may be used when approved by the Contracting Officer.

1.9 DISPOSAL

Control accumulation of waste materials and trash. Recycle or dispose of collected materials off-site at intervals approved by the Contracting Officer and in compliance with waste management procedures. Except as otherwise specified in other sections of the specifications, disposal shall be in accordance with the following:

1.9.1 Reuse

First consideration shall be given to salvage for reuse since little or no re-processing is necessary for this method, and less pollution is created when items are reused in their original form. Sale or donation of waste suitable for reuse shall be considered.

1.9.2 Recycle

Waste materials not suitable for reuse, but having value as being recyclable, shall be made available for recycling whenever economically feasible. Recycle concrete aggregate, asphalt paving, soil materials, wood, lumber and etc, in accordance with latest guide-line of JAPAN MINISTRY OF LAND, INFRASTRUCTURE AND TRANSPORT.

1.9.3 Turn-in

As specified in Paragraph 1.2 .

1.9.4 Waste

Materials with no practical use or economic benefit shall be disposed at a landfill or incinerator in accordance with JEGS.

1.9.5 Return

Set aside and protect mis-delivered and substandard products and materials and return to supplier for credit.

PART 2 PRODUCTS

Not used.

PART 3 EXECUTION

Not used.

-- End of Section ----

SAMPLE FORM FOR COMMANDER FLEET ACTIVITIES YOKOSUKA

COMFLEACTINST 5090.8

Commander, Fleet Activities (COMFLEACT), Yokosuka Solid Waste Tonnage Report

Company / 会社名: _____
Title / 工事名: _____
Contract Number / 契約番号: _____
Date / 日付: _____
Telephone / 電話番号: _____

In case of solid waste to be disposed of at off-base, 未軍基地から出た廃棄物を基地外で処分した場合											
	INCINERATED 焼却処理			LAND FILLED 埋め立て処理			RECYCLED (リサイクル) Off Base				QRP
	KG	COST (¥)	COST ($)	KG	COST (¥)	COST ($)	KG	COST (¥)	COST ($)		KG
Scrap Metal	**金属くず**										
Paper	**古紙**										
Green Yard Waste	**枝葉芝など**										
Textiles	**衣類類**										
Rubber	**ゴム・タイヤ**										
Glass	**ガラスくず**										
Clear Glass	透明ガラス										
Offset Glass	その他のガラス										
Plastic	**廃プラスチック**										
P.E.T Bottles	ペットボトル										
Other Plastic	その他のプラスチック										
Wood	**木くず**										
Pallets	パレット										
Other Woodwaste	その他の木くず										
White Goods	**廃大型家電用品**										
Commercial Refrigerators	業務用冷蔵庫										
Household Refrigerators	家庭用冷蔵庫										
Commercial Air Conditioners	エアコン										
Ovens/Rangers	オーブン/レンジ										
Microwaves	電子レンジ										
Commercial Washing Machines	業務用洗濯機										
Household Washing Machines	家庭用洗濯機										
Commercial Dryers	乾燥機										
Other Household Appliances	その他の家庭電化品										
Electronic Scrap	**廃家電**										
PC's	パソコン										
PC Peripherals	パソコンの周辺機器										
Flatscreen Monitors / Televisions	液晶モニター/TV										
Players	オーディオ機器										
Other Electronic Waste	その他の家電製品										
Solid Hazardous Waste	**固形有害廃棄物**										
Recyclable Hazardous Waste	リサイクル可能な有害廃棄物										
Dry-cell Batteries	乾電池										
Non-Recyclable Hazardous Waste	その他のリサイクル不可能な有害廃棄物										
Other Solid Waste	**その他の固形廃棄物**										
Sludge	汚泥										
Debris	がれき類										
Residue	残渣物										
Concrete Waste	コンクリートガラ										

Record the current yen rate from http://www.un.com/atcc/ for the date indicated on this form.
為替レートは上記のウェブサイトを参照。

COMFLEACT, Yokosuka Public Works Department, Environmental Division, Qualified Recycling Program
FOG担当: Hiroki Shimamura/生活課
Telephone/内線: 243-3817
E-mail: Hiroka.Shimamura.JA@fe.navy.mil

Page 1 of 3

Enclosure (2)

COMFLEACT, Yokosuka

Solid Waste Tonnage Report (Explanations)

Solid waste must be recycled to the most practical extent possible in order to minimize land-filled and incinerated waste. So all recycled waste at COMFLEACT, Yokosuka must be properly documented. Reporting requirements include the weight of waste recycled and costs associated with efforts to recycle the waste.

廃棄物の埋め立て処理や焼却処理を最小限に抑えるために、現実的に可能な限りのリサイクルが義務づけられています・それに伴い、リサイクルにかかる費用やリサイクルの総量などを報告するため、米海軍横須賀基地内でのリサイクルについて適切な記録を残す必要があります・

Category	Description
Scrap Metal (金属くず)	All ferrous and none ferrous metal having **30% or less foreign attachments**.
	付属品が30%以下の全ての金属と非鉄金属物。
Paper (古紙)	All paper-based products such as white bond paper, colored paper, craft paper, shredded paper, cardboard, catalogues, and magazines.
	白いコピー用紙、色紙、模造紙、シュレッダー紙、ダンボール、雑誌などの紙類すべて。
Green/Yard Waste (剪定くずなど)	Waste resulting from land scaping and tree triming requirements such as leaves, grass clipping, tree branches, etc.
	庭仕事や伐採から出た剪定くずなどの廃棄物（例えば、葉っぱ、芝刈りゴミ、木の枝など）
Textiles (古繊維)	All cloth, vinyl, and weather proof fabrics canvas material, and so on. 全ての洋服、ビニル、耐候性素材、テント生地など。
Rubber (ゴム/タイヤ)	Rubber vehicle tires only (rims and other foreign attachments must be removed); excludes matting, innertubes, hose pipes, flooring, mats, door stops, or any other types of rubber.
	ゴム製のタイヤのみ（ホイール等、付属品は取り除くこと）； マット、タイヤの中のゴム製のチューブ、ホース、床用マット、ドアストッパー等、他のあらゆるゴム製品は対象外
Glass (ガラスくず)	**1) Clear Glass** (both whole or crushed clear bottles); **2) Other Types of Glass** (all glass except clear crushed or whole clear bottles).
	1) 透明のガラス（粉砕してあるもの、又は原形を留めているもの）; **2) その他のガラス**（透明でないガラス 製品で粉砕、 又は原型を留めているもの）。
Plastic（廃プラスチック）	**1) Plastic (P.E.T.) Bottles** (both colored and clear plastic bottles); **2) Other Plastic** (all plastic not categorized as Plastic Bottle.).
	1) ペットボトル（色つき、透明どちらも可）; **2) その他のプラスチック**（全てのプラスチック 製品でペットボトル以外のもの）。
Wood (木くず)	**1) Pallets/Crates** (all wood derived from pallets and shipping crates); **2) Other Wood Waste** (all wood not used for pallets and shipping crates and excludes wood categorized as Green/Yard Waste).
	1) パレット/木箱（パレットや配送木箱から出る全ての木くず）; **2) その他の木くず**（パレット、配送木箱や植物性/庭ゴミを除く、 その他の木くず）。

COMFLEACT, Yokosuka

Solid Waste Tonnage Report (Explanations)

Solid waste must be recycled to the most practical extent possible in order to minimize land-filled and incinerated waste. So all recycled waste at COMFLEACT, Yokosuka must be properly documented. Reporting requirements include the weight of waste recycled and costs associated with efforts to recycle the waste.

廃棄物の埋め立て処理や焼却処理を最小限に抑えるために、現実的に可能な限りのリサイクルが義務づけられています・それに伴い、リサイクルにかかる費用やリサイクルの総量などを報告するため、米海軍横須賀基地内でのリサイクルについて適切な記録を残す必要があります・

Category	Description
White Goods (廃大型家電製品)	**1) Commercial Refrigeration Equipment** (refrigeration equipment and freezers used in commercial settings); **2) Household Refrigerators/Freezers** (used exclusively in households); **3) Commercial Air Conditioners** (used for commercial purposes); **4) Household Air Conditioners** (used exclusively in households); **5) Ovens/Ranges** (any type is okay so long as the basic material content is metal; otherwise, it should be categorized as Other Waste.); **6) Microwaves** (any type is okay); **7) Commercial Washing Machines** (used for commercial purposes); **8) Commercial Dryer** (used for comercial purposes only); **9) Other Household Appliances** (includes all household appliances not specifically named).
	1）業務用冷蔵庫（業務用の冷蔵庫/冷凍庫）； **2）家庭用冷蔵庫/冷凍庫**（家庭用のみ）； **3）業務用エアコン**（業務用のみ）； **4）家庭用エアコン**（家庭用のみ）； **5）オーブンレンジ/コンロ**（どのタイプ可だが基本的に金属製素材のもの、そうでなければその他の廃棄物に分類される）； **6）電子レンジ**（どのタイプも可）； **7）業務用洗濯機**（業務用のみ）； 8）**業務用乾燥機**（業務用のみ）； 9）**その他の家電製品**（上記以外の家電製品など）
Electronic Scrap (廃家電)	All precious metal bearing scrap and includes five categories: **1) PC's** (only includes the main tower unit); **2) PC Periferals** (all periferals that connect to the main tower unit such as keyboards, printers, portable drives, etc.); **3) Flatscreen Monitors/Televisions** (Cathode Ray Tube monitors/televisions are categorized as Other Waste); **4) Players** (includes all music and movie players such as DVD players, VCR machines, stereos, etc.); **5) Other Electronic Waste** (includes all waste not listed above that contains precious metal bearing scrap).
	全てのレアメタル、又は次の5つのカテゴリーを含んだもの: **1）パソコン**（メインタワーユニットを含むものに限る）; **2）パソコンの周辺機器**（メインタワーユニットから 接続される キーボード、プリンター、 ポータブルドライブなどの 全ての 周辺機器）; **3）液晶モニター/テレビ**（ブラウン管のモニター/テレビは その他の 固形廃棄物に 分類されます）; **4）オーディオ機器**（DVDプレーヤー、ビデオカセットレコーダー、 ステレオなどの 全ての音楽、 映像機器）; **5）その他の廃家電**（前記のリストに ない全てのレアメタルを含むもの）。
Solid Hazardous Waste (固形有害廃棄物)	**1) Recyclable Hazardous Waste** (containing recyclable hazardous contents); **2) Dry-Cell Batteries** (A-cell, AA-cell, AAA-call, C-cell, D-cell, and any other dry cell battery); and **3) Non-Recyclable Hazardous Waste** (contains no recyclable hazardous contents).
	1）リサイクル可能な有害廃棄物（リサイクル可能な 有害物質を 含有するもの）； **2）乾電池**（単一、 単二、 単三、 単四、 単五の乾電池やその 他の 乾電池）; **3）リサイクル不可能な 有害廃棄物**（リサイクルができない 有害廃棄物を 含むもの）。
Other Solid Waste (その他の固形廃棄物)	This is all waste not included in any of the above categories.
	上記のカテゴリーに含まれていない全ての廃棄物。

CONTRACTOR TURN-IN OF RIPPED OUT MATERIAL
コントラクターに依る取り外した資材の返却

Date: _____
日付

From: Contractor_____
発： コントラクター名
To: PWT Environmental Recycling Branch
宛： PWT 環境課リサイクル部

Ref: Job Order No._____, Title_____
参照： ジョブオーダー番号 工事名

Ship or Project:_____
艦名又はプロジェクト名

Contract No._____
契約番号

1. The following items listed below were ripped out material from the above project and are herewith returned for disposition:

上記の工事修了の結果、下記の品名を取り外しましたので、返却します。
処分をお願い致します。

Nomenclature 品名	Quantity 数量
_____	_____
_____	_____
_____	_____
_____	_____

2. It is understood that all loose items are to be secured or packed in proper containers and properly marked prior to turn-in.

総てのばらばらにした品目は、品目ごとにまとめるか、又は適切な容器に詰めて
返却前に正しくマークすることを理解しています。

SIGNED_____
署名 CONTRACTOR/REPRESENTATIVE PHONE #
コントラクター/責任者 電話番号

CFAY 5090/5(2-04)

SECTION 01 78 00.00 33

CLOSEOUT SUBMITTALS

PART 1 GENERAL

1.1 REFERENCES

The publications listed below form a part of this specification to the extent referenced. The publications are referred to within the text by the basic designation only. The latest version of the publication at time of award shall be used.

ASTM INTERNATIONAL (ASTM)

ASTM E 1971	Stewardship for the Cleaning of Commercial and Institutional Buildings

GREEN SEAL (GS)

GS-37	Industrial and Institutional Cleaners

U.S. DEPARTMENT OF DEFENSE (DOD)

UFC 1-300-08	Criteria for Transfer and Acceptance of DoD Real Property

1.2 SUBMITTALS

Government approval is required for submittals with a "G" designation; submittals not having a "G" designation are for Contractor Quality Control approval. When used, a designation following the "G" designation identifies the office that will review the submittal for the Government. Submit the following in accordance with Section 01 33 00.00 33 SUBMITTAL PROCEDURES:

SD-03 Product Data

As-Built Record of Equipment and Materials; G (FEAD)

Warranty Management Plan; G (FEAD)

Warranty Tags; G (FEAD)

Final Cleaning; G (FEAD)

Spare Parts Data; G (FEAD)

SD-08 Manufacturer's Instructions

Preventative Maintenance; G (FEAD)

Condition Monitoring (Predictive Testing); G (FEAD)

Inspection; G (FEAD)

Posted Instructions; G (FEAD)

SD-10 Operation and Maintenance Data

Operation and Maintenance Manuals; G (FEAD)

SD-11 Closeout Submittals

Record Drawings; G (FEAD)

Certification of lead free, asbestos free and PCB free materials; G (FEAD)

1.3 PROJECT RECORD DOCUMENTS

1.3.1 Record (As-Built) Drawings and Operation & Maintenance (O&M) Data

Furnish hard copy and electronic format for all as-built and O&M information. Provide O&M data for as-built products, materials, and equipment, including data sheets, test reports, warranties, certificates, list of spare parts suppliers for all pieces of equipment, and approved construction submittals. Provide two copies of D size (22x34”) or 11x17” as-built drawings, two copies of Operation and Maintenance Information and two CDs or DVDs containing drawings (in both pdf and Autocad formats), and all construction submittals. Refer to this section’s attachments for templete.

1.3.2 Record (As-Built) Drawings

Drawings showing final as-built conditions of the project. This paragraph covers record drawings complete, as a requirement of the contract. The terms "drawings," "contract drawings," "drawing files," "working record drawings" and "final record drawings" refer to contract drawings which are revised to be used for final record drawings showing as-built conditions. The final CADD record drawings must consist of one set of electronic CADD drawing files in the specified format, 2 sets of prints, and one set of the approved working Record drawings.

1.3.2.1 Government Furnished Materials

One set of electronic CADD files in the specified software and format revised to reflect all bid amendments will be provided by the Government at the preconstruction conference for projects requiring CADD file record drawings.

1.3.2.2 Working Record and Final Record Drawings

Revise 2 sets of paper drawings by red-line process to show the as-built conditions during the prosecution of the project. Keep these working as-built marked drawings current on a weekly basis and at least one set available on the jobsite at all times. Changes from the contract plans which are made in the work or additional information which might be uncovered in the course of construction must be accurately and neatly recorded as they occur by means of details and notes. Prepare final record (as-built) drawings after the completion of each definable feature of work as listed in the Contractor Quality Control Plan (Foundations, Utilities, Structural Steel, etc., as appropriate for the project). The working as-

built marked prints and final record (as-built) drawings will be jointly reviewed for accuracy and completeness by the Contracting Officer and the Contractor prior to submission of each monthly pay estimate. If the Contractor fails to maintain the working and final record drawings as specified herein, the Contracting Officer will deduct from the monthly progress payment an amount representing the estimated cost of maintaining the record drawings. This monthly deduction will continue until an agreement can be reached between the Contracting Officer and the Contractor regarding the accuracy and completeness of updated drawings. Show on the working and final record drawings, but not limited to, the following information:

a. The actual location, kinds and sizes of all sub-surface utility lines. In order that the location of these lines and appurtenances may be determined in the event the surface openings or indicators become covered over or obscured, show by offset dimensions to two permanently fixed surface features the end of each run including each change in direction on the record drawings. Locate valves, splice boxes and similar appurtenances by dimensioning along the utility run from a reference point. Also record the average depth below the surface of each run.

b. The location and dimensions of any changes within the building structure.

c. Correct grade, elevations, cross section, or alignment of roads, earthwork, structures or utilities if any changes were made from contract plans.

d. Changes in details of design or additional information obtained from working drawings specified to be prepared and/or furnished by the Contractor; including but not limited to fabrication, erection, installation plans and placing details, pipe sizes, insulation material, dimensions of equipment foundations, etc.

e. The topography, invert elevations and grades of drainage installed or affected as part of the project construction.

f. Changes or modifications which result from the final inspection.

g. Where contract drawings or specifications present options, show only the option selected for construction on the final as-built prints.

h. If borrow material for this project is from sources on Government property, or if Government property is used as a spoil area, furnish a contour map of the final borrow pit/spoil area elevations.

i. Systems designed or enhanced by the Contractor, such as HVAC controls, fire alarm, fire sprinkler, and irrigation systems.

j. Modifications (include within change order price the cost to change working and final record drawings to reflect modifications) and compliance with the following procedures.

    (1) Follow directions in the modification for posting descriptive changes.

    (2) Place a Modification Delta at the location of each deletion.

(3) For new details or sections which are added to a drawing, place a Modification Delta by the detail or section title.

(4) For minor changes, place a Modification Delta by the area changed on the drawing (each location).

(5) For major changes to a drawing, place a Modification Delta by the title of the affected plan, section, or detail at each location.

(6) For changes to schedules or drawings, place a Modification Delta either by the schedule heading or by the change in the schedule.

(7) The Modification Delta size shall be 13 mm (1/2 inch) diameter unless the area where the circle is to be placed is crowded. Smaller size circle shall be used for crowded areas.

1.3.2.3 Drawing Preparation

Modify the record drawings as may be necessary to correctly show the features of the project as it has been constructed by bringing the contract set into agreement with approved working as-built prints, and adding such additional drawings as may be necessary. These working as-built marked prints must be neat, legible and accurate. These drawings are part of the permanent records of this project and must be returned to the Contracting Officer after approval by the Government. Any drawings damaged or lost by the Contractor must be satisfactorily replaced by the Contractor at no expense to the Government.

1.3.2.4 Computer Aided Design and Drafting (CADD) Drawings

Only employ personnel proficient in the preparation of CADD drawings to modify the contract drawings or prepare additional new drawings. Additions and corrections to the contract drawings must be equal in quality and detail to that of the originals. Line colors, line weights, lettering, layering conventions, and symbols must be the same as the original line colors, line weights, lettering, layering conventions, and symbols. If additional drawings are required, prepare them using the specified electronic file format applying the same graphic standards specified for original drawings. The title block and drawing border to be used for any new final record drawings must be identical to that used on the contract drawings. Accomplish additions and corrections to the contract drawings using CADD files with an additional layer. The Contractor will be furnished "as-designed" drawings in AutoCad Release 2004 U.S. Version format compatible with a Windows XP operating system. The electronic files will be supplied on compact disc, read-only memory (CD-ROM). Provide all program files and hardware necessary to prepare final record drawings. The Contracting Officer will review final record drawings for accuracy and return them to the Contractor for required corrections, changes, additions, and deletions.

a. Provide CADD "base" colors of red, green, and blue. Color code for changes as follows:

(1) Deletions (Red) - Over-strike deleted graphic items (lines), lettering in notes and leaders.

(2) Additions (Green) - Added items, lettering in notes and leaders.

(3) Special (Blue) - Items requiring special information, coordination, or special detailing or detailing notes.

b. Rename the Contract Drawing files in a manner related to the contract number (i.e., 98-C-10.DGN) as instructed in the Pre-Construction conference. Use only those renamed files for the Marked-up changes. All changes shall be made on the layer/level as the original item.

c. When final revisions have been completed, show the wording "RECORD DRAWINGS / AS-BUILT CONDITIONS" followed by the name of the Contractor in letters at least 5 mm(3/16 inch) high on the cover sheet drawing. Mark all other contract drawings either "Record" drawing denoting no revisions on the sheet or "Revised Record" denoting one or more revisions. Date original contract drawings in the revision block.

d. Within 10 days for contracts less than $5 million, after Government approval of all of the working record drawings for a phase of work, prepare the final CADD record drawings for that phase of work and submit two sets of blue-lined prints of these drawings for Government review and approval. The Government will promptly return one set of prints annotated with any necessary corrections. Within 7 days for contracts less than $5 million, revise the CADD files accordingly at no additional cost and submit one set of final prints for the completed phase of work to the Government. Within 10 days for contracts less than $5 million, of substantial completion of all phases of work, submit the final record drawing package for the entire project. Submit one set of electronic files on compact disc, read-only memory (CD-ROM), one set of mylars, two sets of blue-line prints and one set of the approved working record drawings. They must be complete in all details and identical in form and function to the contract drawing files supplied by the Government. Any transactions or adjustments necessary to accomplish this is the responsibility of the Contractor. The Government reserves the right to reject any drawing files it deems incompatible with the customer's CADD system. Paper prints, drawing files and storage media submitted will become the property of the Government upon final approval. Failure to submit final record drawing files and marked prints as specified will be cause for withholding any payment due the Contractor under this contract. Approval and acceptance of final record drawings must be accomplished before final payment is made to the Contractor.

1.3.2.5 Payment

No separate payment will be made for record drawings required under this contract, and all costs accrued in connection with such drawings are considered a subsidiary obligation of the Contractor.

1.3.3 As-Built Record of Equipment and Materials

Furnish one copy of preliminary record of equipment and materials used on the project 15 days prior to final inspection. This preliminary submittal will be reviewed and returned 4 days after final inspection with Government comments. Submit two sets of final record of equipment and materials 10 days after final inspection. Key the designations to the related area depicted on the contract drawings. List the following data:

RECORD OF DESIGNATED EQUIPMENT AND MATERIALS DATA				
Description	Specification	Manufacturer	Composition	Where Used

	Section	and Catalog, Model, and Serial Number	and Size	

1.3.4 Final Approved Shop Drawings

Furnish final approved project shop drawings 30 days after transfer of the completed facility.

1.3.5 Construction Contract Specifications

Furnish final record (as-built) construction contract specifications, including modifications thereto, 30 days after transfer of the completed facility.

1.3.6 Real Property Equipment

Furnish a list of installed equipment furnished under this contract. Include all information usually listed on manufacturer's name plate. In the "EQUIPMENT-IN-PLACE LIST" include, as applicable, the following for each piece of equipment installed: description of item, location (by room number), model number, serial number, capacity, name and address of manufacturer, name and address of equipment supplier, condition, spare parts list, manufacturer's catalog, and warranty. Furnish a draft list at time of transfer. Furnish the final list 30 days after transfer of the completed facility.

1.4 SPARE PARTS DATA

Submit two copies of the Spare Parts Data list.

a. Indicate manufacturer's name, part number, nomenclature, and stock level required for maintenance and repair. List those items that may be standard to the normal maintenance of the system.

b. Supply items of each part for spare parts inventory. Provision of spare parts does not relieve the Contractor of responsibilities listed under the contract guarantee provisions.

1.5 PREVENTATIVE MAINTENANCE

Submit Preventative Maintenance, Condition Monitoring (Predictive Testing) and Inspection schedules with instructions that state when systems should be retested.

a. Define the anticipated length of each test, test apparatus, number of personnel identified by responsibility, and a testing validation procedure permitting the record operation capability requirements within the schedule. Provide a signoff blank for the Contractor and Contracting Officer for each test feature; e.g., liter per second, rpm, kilopascal (gpm, rpm, psi). Include a remarks column for the testing validation procedure referencing operating limits of time, pressure, temperature, volume, voltage, current, acceleration, velocity, alignment, calibration, adjustments, cleaning, or special system notes. Delineate procedures for preventative maintenance, inspection, adjustment, lubrication and cleaning necessary to minimize corrective maintenance and repair.

b. Repair requirements must inform operators how to check out, troubleshoot, repair, and replace components of the system. Include electrical and mechanical schematics and diagrams and diagnostic techniques necessary to enable operation and troubleshooting of the system after acceptance.

1.6 CERTIFICATION OF LEAD FREE, ASBESTOS FREE, AND PCB FREE MATERIALS

Submit the Certification of Lead Free, Asbestos Free, and PCB Free Materials. Include on the certification form the following information: project name, project number, Contractor name, license number, Contractor address, and certification. The certification will read as follows and be signed and dated by the Contractor. “I hereby certify the information provided herein is accurate and that the requisition/procurement of all materials listed on this form comply with current JEGS requirement of Lead Based Paint, Asbestos, and Polychlorinated Biphenyls.”

1.7 WARRANTY MANAGEMENT

1.7.1 Warranty Management Plan

Develop a warranty management plan which contains information relevant to the clause Warranty of Construction in FAR. At least 30 days before the planned pre-warranty conference, submit one set of the warranty management plan. Include within the warranty management plan all required actions and documents to assure that the Government receives all warranties to which it is entitled. The plan must be in narrative form and contain sufficient detail to render it suitable for use by future maintenance and repair personnel, whether tradesmen, or of engineering background, not necessarily familiar with this contract. The term "status" as indicated below must include due date and whether item has been submitted or was accomplished. Warranty information made available during the construction phase must be submitted to the Contracting Officer for approval prior to each monthly pay estimate. Assemble approved information in a binder and turn over to the Government upon acceptance of the work. The construction warranty period will begin on the date of project acceptance and continue for the full product warranty period. A joint 4 month and 9 month warranty inspection will be conducted, measured from time of acceptance, by the Contractor, Contracting Officer and the Customer Representative. Include within the warranty management plan, but not limited to, the following:

a. Roles and responsibilities of all personnel associated with the warranty process, including points of contact and telephone numbers within the organizations of the Contractors, subContractors, manufacturers or suppliers involved.

b. Furnish with each warranty the name, address, and telephone number of each of the guarantor's representatives nearest to the project location.

c. Listing and status of delivery of all Certificates of Warranty for extended warranty items, to include roofs, HVAC balancing, pumps, motors, transformers, and for all commissioned systems such as fire protection and alarm systems, sprinkler systems, lightning protection systems, etc.

d. A list for each warranted equipment, item, feature of construction or system indicating:

(1) Name of item.
(2) Model and serial numbers.
(3) Location where installed.
(4) Name and phone numbers of manufacturers or suppliers.
(5) Names, addresses and telephone numbers of sources of spare parts.
(6) Warranties and terms of warranty. Include starting date of warranty of construction. Items which have extended warranties must be indicated with separate warranty expiration dates.
(7) Cross-reference to warranty certificates as applicable.
(8) Starting point and duration of warranty period.
(9) Summary of maintenance procedures required to continue the warranty in force.
(10) Cross-reference to specific pertinent Operation and Maintenance manuals.
(11) Organization, names and phone numbers of persons to call for warranty service.
(12) Typical response time and repair time expected for various warranted equipment.

e. The Contractor's plans for attendance at the 4 and 9 month post-construction warranty inspections conducted by the Government.

f. Procedure and status of tagging of all equipment covered by extended warranties.

g. Copies of instructions to be posted near selected pieces of equipment where operation is critical for warranty and/or safety reasons.

1.7.2 Performance Bond

The Contractor's Performance Bond must remain effective throughout the construction period.

a. In the event the Contractor fails to commence and diligently pursue any construction warranty work required, the Contracting Officer will have the work performed by others, and after completion of the work, will charge the remaining construction warranty funds of expenses incurred by the Government while performing the work, including, but not limited to administrative expenses.

b. In the event sufficient funds are not available to cover the construction warranty work performed by the Government at the Contractor's expense, the Contracting Officer will have the right to recoup expenses from the bonding company.

c. Following oral or written notification of required construction warranty repair work, respond in a timely manner. Written verification will follow oral instructions. Failure of the Contractor to respond will be cause for the Contracting Officer to proceed against the Contractor.

1.7.3 Pre-Warranty Conference

Within 30 days prior to the start of on site work, the Contractor shall meet with Government FEAD personnel to discuss all warranties applicable under the task order, including but not limited to spec items, water proofing membrane, joint sealing for exterior wall panels, roofing, and equipments. Nothing discussed in the pre-warranty conference shall be construed as

authorizing the Contractor to deviate from the requirements of FAR 52.246 (warranty of construction) or Subpart 46.7 (warranties), nor limiting the Government's rights with respect to latent defects, gross mistakes or fraud. The pre-warranty conference does not relieve the Contractor of any of its responsibilities in other portions of the contract or task order.

1.7.4 Contractor's Response to Construction Warranty Service Requirements

Following oral or written notification by the Contracting Officer, respond to construction warranty service requirements in accordance with the "Construction Warranty Service Priority List" and the three categories of priorities listed below. Submit a report on any warranty item that has been repaired during the warranty period. Include within the report the cause of the problem, date reported, corrective action taken, and when the repair was completed. If the Contractor does not perform the construction warranty within the timeframes specified, the Government will perform the work and backcharge the construction warranty payment item established.

a. First Priority Code 1. Perform onsite inspection to evaluate situation, and determine course of action within 4 hours, initiate work within 6 hours and work continuously to completion or relief.

b. Second Priority Code 2. Perform onsite inspection to evaluate situation, and determine course of action within 8 hours, initiate work within 24 hours and work continuously to completion or relief.

c. Third Priority Code 3. All other work to be initiated within 3 work days and work continuously to completion or relief.

d. The "Construction Warranty Service Priority List" is as follows:

Code 1-Life Safety Systems
(1) Fire suppression systems.
(2) Fire alarm system(s) in place in the building.

Code 1-Air Conditioning Systems
(1) Recreational support.
(2) Air conditioning leak in part of building, if causing damage.
(3) Air conditioning system not cooling properly.

Code 1-Doors
(1) Overhead doors not operational, causing a security, fire, or safety problem.
(2) Interior, exterior personnel doors or hardware, not functioning properly, causing a security, fire, or safety problem.

Code 3-Doors
(1) Overhead doors not operational.
(2) Interior/exterior personnel doors or hardware not functioning properly.

Code 1-Electrical
(1) Power failure (entire area or any building operational after 1600 hours).
(2) Security lights
(3) Smoke detectors

Code 2-Electrical
(1) Power failure (no power to a room or part of building).
(2) Receptacle and lights (in a room or part of building).

Code 3-Electrical
(1) Street lights.

Code 1-Gas
(1) Leaks and breaks.
(2) No gas to family housing unit or cantonment area.

Code 1-Heat
(1) Area power failure affecting heat.
(2) Heater in unit not working.

Code 2-Kitchen Equipment
(1) Dishwasher not operating properly.
(2) All other equipment hampering preparation of a meal.

Code 1-Plumbing
(1) Hot water heater failure.
(2) Leaking water supply pipes.

Code 2-Plumbing
(1) Flush valves not operating properly.
(2) Fixture drain, supply line to commode, or any water pipe leaking.
(3) Commode leaking at base.

Code 3 -Plumbing
(1) Leaky faucets.

Code 3-Interior
(1) Floors damaged.
(2) Paint chipping or peeling.
(3) Casework.

Code 1-Roof Leaks
(1) Temporary repairs will be made where major damage to property is occurring.

Code 2-Roof Leaks
(1) Where major damage to property is not occurring, check for location of leak during rain and complete repairs on a Code 2 basis.

Code 2-Water (Exterior)
(1) No water to facility.

Code 2-Water (Hot)
(1) No hot water in portion of building listed.

Code 3-All other work not listed above.

1.7.5 Warranty Tags

At the time of installation, tag each warranted item with a durable, oil and water resistant tag approved by the Contracting Officer. Attach each tag

with a copper wire and spray with a silicone waterproof coating. Also, submit two record copies of the warranty tags showing the layout and design. The date of acceptance and the QC signature must remain blank until the project is accepted for beneficial occupancy. Show the following information on the tag.

Type of product/material	
Model number	
Serial number	
Contract number	
Warranty period from/to	
Inspector's signature	
Construction Contractor	
Address	
Telephone number	
Warranty contact	
Address	
Telephone number	
Warranty response time priority code	
WARNING - PROJECT PERSONNEL TO PERFORM ONLY OPERATIONAL MAINTENANCE DURING THE WARRANTY PERIOD.	

1.8 OPERATION AND MAINTENANCE MANUALS

Submit 6 copies of the project operation and maintenance manuals 30 calendar days prior to testing the system involved. Update and resubmit data for final approval no later than 30 calendar days prior to contract completion.

1.8.1 Configuration

Operation and Maintenance Manuals must be consistent with the manufacturer's standard brochures, schematics, printed instructions, general operating procedures, and safety precautions. Bind information in manual format and grouped by technical sections. Test data must be legible and of good quality. Light-sensitive reproduction techniques are acceptable provided finished pages are clear, legible, and not subject to fading. Pages for vendor data and manuals must have 10 millimeter (0.3937-inch) holes and be bound in 3-ring, loose-leaf binders. Organize data by separate index and tabbed sheets, in a loose-leaf binder. Binder must lie flat with printed sheets that are easy to read. Caution and warning indications must be clearly labeled.

1.8.2 Training and Instruction

Submit classroom and field instructions in the operation and maintenance of systems equipment where required by the technical provisions. These services must be directed by the Contractor, using the manufacturer's factory-trained personnel or qualified representatives. Contracting Officer will be given 7 calendar days written notice of scheduled instructional services. Instructional materials belonging to the manufacturer or vendor, such as lists, static exhibits, and visual aids, must be made available to the Contracting Officer.

1.9 CLEANUP

Provide final cleaning in accordance with ASTM E 1971 and submit two copies of the listing of completed final clean-up items. Leave premises "broom clean." Comply with GS-37 for general purpose cleaning and bathroom cleaning. Use only nonhazardous cleaning materials, including natural cleaning materials, in the final cleanup. Clean interior and exterior glass surfaces exposed to view; remove temporary labels, stains and foreign substances; polish transparent and glossy surfaces; vacuum carpeted and soft surfaces. Clean equipment and fixtures to a sanitary condition. Clean filters of operating equipment and comply with the Indoor Air Quality (IAQ) Management Plan. Clean debris from roofs, gutters, downspouts and drainage systems. Sweep paved areas and rake clean landscaped areas. Remove waste and surplus materials, rubbish and construction facilities from the site. Recycle, salvage, and return construction and demolition waste from project in accordance with the Waste Management Plan. Promptly and legally transport and dispose of any trash. Do not burn, bury, or otherwise dispose of trash on the project site.

PART 2 PRODUCTS

Not Used

PART 3 EXECUTION

Not Used

-- End of Section --

DIVISION 02

SECTION 02 41 00.00 33

DEMOLITION

PART 1 GENERAL

1.1 REFERENCES

The following publications listed below form a part of this specification to the extent referenced. The publications are referred to in the text by the basic designation only. The latest version of the publication at time of award shall be used.

Department of Defense (DOD)

Japan Environmental Governing Standards (JEGS), by US Forces Japan

Kanagawa Prefectural Waste Management Division ("Kanagawa-Ken Haikibutsu Taisaku-ka")

List of Certified Industrial Waste Treatment/Landfill Company ("Sangyo Haikibutsu Shori Gyosha Kyoka Gaiyou")

U.S. ARMY CORPS OF ENGINEERS (USACE)

EM 385-1-1 (2014) Safety -- Safety and Health Requirements

NATIONAL FIRE PROTECTION ASSOCIATION (NFPA)

NFPA 241 Standard for Safeguarding Construction, Alteration, and Demolition Operations

1.2 GENERAL REQUIREMENTS

Do not begin demolition until authorization is received from the Contracting Officer. Remove rubbish and debris from the project site; do not allow accumulations inside or outside the buildings. Store materials that cannot be removed daily in areas specified by the Contracting Officer.

1.3 SUBMITTALS

Government approval is required for submittals with a "G" designation; submittals not having a "G" designation are for Contractor Quality Control approval. Submit the following in accordance with Section 01 33 00.00 33 “SUBMITTAL PROCEDURES”:

SD-01, Preconstruction submittals

Demolition Plan; G (FEAD)

Existing Conditions;

Submit demolition and removal procedures for approval before work is started.

SD-07, Certificates

Disposal manifest for Solid Waste; G (FEAD)

Register, fluorocarbon -refrigerant-gas/halon-gas handling technician; G (FEAD)

1.4 REGULATORY AND SAFETY REQUIREMENTS

Comply with federal, GOJ, prefectural, local, and Japan Environmental Governing Standards (JEGS) regarding hauling and disposal regulations.

1.5 DUST AND DEBRIS CONTROL

Prevent the spread of dust and debris to occupied portions of the building and avoid the creation of a nuisance or hazard in the surrounding area. Do not use water if it results in hazardous or objectionable conditions such as, but not limited to, ice, flooding, or pollution. Vacuum and dust the work area daily.

1.6 PROTECTION

1.6.1 Traffic Control Signs

Where pedestrian and driver safety is endangered in the area of removal work, use traffic barricades with flashing lights. Provide signal person if necessary. Notify the Contracting Officer prior to beginning such work.

1.6.2 Existing Conditions Documentation

Before beginning any demolition or deconstruction work, survey the site and examine the drawings and specifications to determine the extent of the work. Record existing conditions in the presence of the Contracting Officer showing the condition of structures and other facilities adjacent to areas of alteration or removal. Photographs sized 100 mm (4 inch) will be acceptable as a record of existing conditions. Include in the record the elevation of the top of foundation walls, finish floor elevations, possible conflicting electrical conduits, plumbing lines, alarms systems, the location and extent of existing cracks and other damage and description of surface conditions that exist before starting work. It is the Contractor's responsibility to verify and document all required outages which will be required during the course of work, and to note these outages on the record document.

1.6.3 Items to Remain in Place

Take necessary precautions to avoid damage to existing items to remain in place, to be reused, or to remain the property of the Government. Repair or replace damaged items as approved by the Contracting Officer. Coordinate the work of this section with all other work indicated. Construct and maintain shoring, bracing, and supports as required. Ensure that structural elements are not overloaded. Increase structural supports or add new supports as may be required as a result of any cutting, removal, demolition work performed under this contract. Do not overload structural elements and pavements to remain. Provide new supports and reinforcement for existing construction weakened by demolition or removal work. Repair, reinforcement,

or structural replacement require approval by the Contracting Officer prior to performing such work.

1.6.4 Existing Construction

Do not disturb existing construction beyond the extent indicated or necessary for installation of new construction. Provide temporary shoring and bracing for support of building components to prevent settlement or migration of dust and dirt in all work areas. Remove dust, dirt, and debris from work areas daily.

1.6.5 Weather Protection

For portions of the building to remain, protect building interior and materials and equipment from the weather at all times. Where removal of existing roofing is necessary to accomplish work, have materials and workmen ready to provide adequate and temporary covering of exposed areas.

1.6.6 Trees

Conform to Section 01 57 19.00 33, "Temporally Environmental Controls" for protection of natural resources. Protect trees within the project site that might be damaged during demolition and that are indicated to be left in place, by a 1.8 m high fence. Erect fence a minimum of 1.5 m from the trunks of individual trees or follow the outer perimeter of branches or clumps of trees. Replace any trees designated to remain that is damaged during the work under this contract with like-kind or as approved by the Contracting Officer.

1.6.7 Utility Services

Maintain existing utilities indicated to stay in service and protect against damage during demolition operations. Prior to start of works, the Contractor shall shut off utilities serving each area of removal as directed by the Government and disconnect and seal.

1.6.8 Facilities

Protect electrical and mechanical services and utilities. Where removal of existing utilities and pavement is specified or indicated, provide approved barricades, temporary covering of exposed areas, and temporary services or connections for electrical and mechanical utilities. Floors, roofs, walls, columns, plasters, and other structural components that are designated and constructed to stand without lateral support or shoring, and are determined to be in stable condition, shall remain standing without additional bracing, shoring, or lateral support until demolished, unless directed otherwise by the Contracting Officer. Ensure that any elements deemed unstable are not left unsupported. Place secure bracing, shoring, or lateral supports as required on any cutting, removal, or demolition work performed under this contract that may become unstable.

1.6.9 Protection of Personnel

Before, during and after the demolition work the Contractor shall continuously evaluate the condition of the structure being demolished and take immediate action to protect all personnel working in and around the project site. No area, section, or component of floors, roofs, walls,

columns, pilasters, or other structural element will be allowed to be left standing without sufficient bracing, shoring, or lateral support to prevent collapse or failure while workmen remove debris or perform other work in the immediate area.

1.7 BURNING

Burning will not be permitted.

1.8 RELOCATIONS

Perform the removal and reinstallation of relocated items as indicated with workmen skilled in the trades involved. Repair items to be relocated which are damaged or replace damaged items with new undamaged items as approved by the Contracting Officer.

1.9 REQUIRED DATA

The demolition plan shall include procedures for careful removal and disposition of materials specified to be salvaged, coordination with other work in progress, a disconnection schedule of utility services, and a detailed description of methods and equipment to be used for each operation and of the sequence of operations. Provide procedures for safe conduct of the work in accordance with EM 385-1-1. Include statement affirming Contractor inspection of the existing roof deck and its suitability to perform as a safe working platform or if inspection reveals a safety hazard to workers, state provisions for securing the safety of the workers throughout the performance of the work.

1.10 ENVIRONMENTAL PROTECTION

As specified in Section 01 57 19.00 33, “Temporary Environmental Controls.”

1.11 USE OF EXPLOSIVES

Use of explosives will not be permitted.

PART 2 PRODUCTS

Not used.

PART 3 EXECUTION

3.1 EXISTING FACILITIES TO BE REMOVED

As indicated on drawings.

3.1.1.1 Lead-based Paint (LBP) Removal Work

As specified in Section 02 83 13.00 33 “Lead in Construction.”, 02 83 19.00 33 “Lead Based Paint Hazard Abatement, Target Housing & Child Occupied Facilities”.

3.1.1.2 Asbestos Containing Materials Removal Work

As specified in Section 02 82 16.00 33 “Engineering Control of Asbestos Containing Materials.”

3.2 DISPOSITION OF MATERIAL

3.2.1 Title to Materials

Except where specified, all materials and equipment removed (except the materials and equipment to be reused, salvaged, and turn-in) shall become the property of the Contractor and shall be removed from Government property. Title to materials resulting from demolition, and materials and equipment to be removed, is vested in the Contractor upon approval by the Contracting Officer of the Contractor's demolition and removal procedures, and authorization by the Contracting Officer to begin demolition. The Government will not be responsible for the condition or loss of, or damage to, such property after notice to proceed. Materials and equipment shall not be viewed by prospective purchasers or sold on the site.

3.2.2 Hazardous and Regulated Materials and Equipment

3.2.2.1 Disposal of Ozone Depleting Substance (ODS)

As specified in Section 01 57 19.00 33, “Temporary Environmental Controls.”

3.2.2.2 Disposal of Hazardous Waste

As specified in Section 01 57 19.00 33, “Temporary Environmental Controls.”

3.3 CLEANUP

3.3.1 Debris and Rubbish

Remove and transport debris and rubbish in a manner that will prevent spillage on pavements, streets or adjacent areas. Clean up spillage from pavements, streets and adjacent areas

-- End of Section --

SECTION 02 82 16.00 33

ENGINEERING CONTROL OF ASBESTOS CONTAINING MATERIALS

PART 1 GENERAL

1.1 REFERENCES

The latest issue publications listed below form a part of this specification to the extent referenced. The publications are referred to in the text by the basic designation only. The latest version of the publication at time of award shall be used.

AMERICAN INDUSTRIAL HYGIENE ASSOCIATION (AIHA)

AIHA Z9.2	Fundamentals Governing the Design and Operation of Local Exhaust Systems

American National Standards Institute (ANSI)

ANSI Z88.2	Respiratory Protection

American Society for Testing and Materials (ASTM)

ASTM C 732	Aging Effects of Artificial Weathering on Latex Sealants
ASTM D 1331	Surface and Interfacial Tension of Solutions of Surface-Active Agents
ASTM D 2794	Resistance of Organic Coatings to the Effects of Rapid Deformation (Impact)
ASTM D 522	Mandrel Bend Test of Attached Organic Coatings
ASTM E 119	Fire Tests of Building Construction and Materials
ASTM E 84	Surface Burning Characteristics of Building Materials
ASTM E 96/E 96M	Standard Test Methods for Water Vapor Transmission of Water Vapor Transmission of Materials
ASTM E 736	Cohesion/Adhesion of Sprayed Fire-Resistive Materials Applied to Structural Members
ASTM E 1494	Encapsulants for Spray- or Trowel-Applied Friable Asbestos-Containing Building Materials
ASTM E 1368	Visual Inspection of Asbestos Abatement Projects

U.S. ENVIRONMENTAL PROTECTION AGENCY (EPA)

EPA 560/5-85-024	Guidance for Controlling Asbestos-Containing Materials in Buildings (Purple Book)

U.S. NATIONAL ARCHIVES AND RECORDS ADMINISTRATION (NARA)

29 CFR 1926.103	Respiratory Protection
29 CFR 1926.1101	Asbestos, Tremolite, Anthophyllite, Actinolite
29 CFR 1926.200	Accident Prevention Signs and Tags
29 CFR 1926.51	Sanitation
29 CFR 1926.59	Hazard Communication
40 CFR 61-SUBPART A	General Provisions
40 CFR 763	Asbestos

U.S. NAVAL FACILITIES ENGINEERING COMMAND (NAVFAC)

ND OPNAVINST 5100.23	Navy Occupational Safety and Health (NAVOSH) Program Manual

UNDERWRITERS LABORATORIES INC. (UL)

UL 586	High-Efficiency, Particulate, Air Filter Units

Department of Defense (DOD)

Japan Environmental Governing Standards (JEGS), by US Forces Japan

COMFLEACTINST 5090.1D, Commander, Fleet Activities, Yokosuka, HW Management Plan of April 2013

Letter of Ser 1000E/228 of 17 Apr 07 “Direct Disposal of Asbestos Contaminated Material Generated from Ship Repair and Facility Construction and Maintenance Projects”

JAPANESE LAWS

Air Pollution Control Law ("Taiki Osenn Boushi Hou")

Industrial Safety and Health Law ("Rou-dou Anzen Eisei Hou")

Measuring Law ("Keiryo Hou")

Waste Disposal and Public Cleansing Law ("Haiki-butsu Shori Oyobi Seisou-ni Kansuru Houritsu")

MINISTER OF THE ENVIRONMENT, GOVERNMENT OF JAPAN (KANKYO-SHO)

Asbestos Abatement Manual for Demolition of Buildings ("Kenchikubutsu no kaitai-tou ni kakaru Sekimen Hisan Boushi Taisaku Maniaru"), established by the Air Pollution Control Division, the Air Quality Bureau, Japan.

1.2 DEFINITIONS

1.2.1 ACM

Asbestos Containing Materials

1.2.2 Amended Water

Water containing a wetting agent or surfactant with a maximum surface tension of 29 dynes per centimeter when tested in accordance with ASTM D 1331.

1.2.3 Area Sampling

Sampling of asbestos fiber concentrations which approximates the concentrations of asbestos in the theoretical breathing zone but is not actually collected in the breathing zone of an employee.

1.2.4 Asbestos

The term asbestos includes chrysotile, amosite, crocidolite, tremolite, anthophyllite, and actinolite and any of these minerals that has been chemically treated or altered. Materials are considered to contain asbestos if the asbestos content of the material is determined to be more than 0.1 percent by weight.

1.2.5 Asbestos Control Area

That area where asbestos removal operations are performed which is isolated by physical boundaries which assist in the prevention of the uncontrolled release of asbestos dust, fibers, or debris.

1.2.6 Asbestos Fibers

Those fibers having an aspect ratio of at least 3:1 and longer than 5 micrometers as determined by National Institute for Occupational Safety and Health (NIOSH) Method 7400.

1.2.7 Asbestos Permissible Exposure Limit

0.1 fibers per cubic centimeter of air as an 8-hour time weighted average measured in the breathing zone as defined by 29 CFR 1926.1101 or other Federal legislation having legal jurisdiction for the protection of workers health.

1.2.8 Asbestos Waste

Type I Waste ACM: Includes, but is not limited to: sprayed asbestos; asbestos lagging material; diatomaceous earth kieselguhr) lagging material; Pearlite lagging material; lagging material that, when dry, can be crumbled, pulverized, or reduced to powder by hand pressure, or when placed in contact with moving air or vibration; items contaminated with asbestos as a result of asbestos removal operations (e.g., PPE, plastic sheeting); items

contaminated with asbestos (e.g., respirators, asbestos dust collection filters, equipment); and imported asbestos.
Type I waste ACM shall be categorized as a Specified Hazardous Industrial Waste (SHIW), “Hai-Sekimen”, which is a subcategory of Specially Controlled Industrial Waste (SCIW) “Tokubetsu Kanri Sangyo Haikibutsu”.

Type II waste refers to all other waste ACM not otherwise segregated as a Type I waste ACM, including, but not limited to: fire safes; slate board; cement board; siding board; floor tile; gaskets; packing; cement pipe; and brake shoes.
Type II waste ACM shall be categorized as an Asbestos Containing Industrial Waste “Sekimen Ganyu Sangyo Haikibutsu”.

1.2.9 Background

The ambient airborne asbestos concentration in an uncontaminated area as measured prior to any asbestos hazard abatement efforts. Background concentrations for other (contaminated) areas are measured in similar but asbestos free locations.

1.2.10 Contractor

The Contractor is that individual, or entity under contract to the Navy to perform the herein listed work.

1.2.11 Competent Person

A person meeting the requirements for competent person as specified in 29 CFR 1926.1101 including a person capable of identifying existing asbestos hazards in the workplace and selecting the appropriate control strategy for asbestos exposure, who has the authority to take prompt corrective measures to eliminate them, and is specifically trained in a training course which meet the criteria of EPA's Model Accreditation Plan (40 CFR 763) for project designer or contractor/supervisor.

1.2.12 Encapsulation

The abatement of an asbestos hazard through the appropriate use of chemical encapsulates.

1.2.13 Encapsulates

Specific materials in various forms used to chemically or physically entrap asbestos fibers in various configurations to prevent these fibers from becoming airborne. There are four types of encapsulates as follows which must comply with performance requirements as specified herein.

a. Removal Encapsulate (can be used as a wetting agent)

b. Bridging Encapsulate (used to provide a tough, durable surface coating to asbestos containing material)

c. Penetrating Encapsulate (used to penetrate the asbestos containing material encapsulating all asbestos fibers and preventing fiber release due to routine mechanical damage)

d. Lock-Down Encapsulate (used to seal off or "lock-down" minute asbestos fibers left on surfaces from which asbestos containing material has been removed).

1.2.14 Friable Asbestos Material

Material containing more than 0.1 percent asbestos by weight that can be crumbled, pulverized, or reduced to powder by hand pressure when dry.

1.2.15 Glovebag Technique

Those asbestos removal and control techniques put forth in 29 CFR 1926.1101 Appendix G.

1.2.16 HEPA Filter Equipment

High efficiency particulate air (HEPA) filtered vacuum and/or exhaust ventilation equipment (negative air machine and/or waste water pump) with a filter system capable of collecting and retaining asbestos fibers. Filters shall retain 99.97 percent of particles 0.3 microns or larger as indicated in UL 586.

1.2.17 Negative Pressure Enclosure (NPE)

That engineering control technique described as a negative pressure enclosure in 29 CFR 1926.1101.

1.2.18 Nonfriable Asbestos Material

Material that contains asbestos in which the fibers have been immobilized by a bonding agent, coating, binder, or other material so that the asbestos is well bound and will not normally release asbestos fibers during any appropriate use, handling, storage or transportation. It is understood that asbestos fibers may be released under other conditions such as demolition, removal, or mishap.

1.2.19 Personal Sampling

Air sampling which is performed to determine asbestos fiber concentrations within the breathing zone of a specific employee, as performed in accordance with 29 CFR 1926.1101.

1.2.20 Private Qualified Person (PQP)

A qualified person hired by the Prime Contractor to perform the herein listed task as a third party entity.

Industrial Hygienist who has successfully completed training and is therefore accredited under a legitimate Model Accreditation Plan as described in 40 CFR 763 as a Building Inspector, Contractor/Supervisor, Asbestos Worker, and Asbestos Project Designer; and has successfully completed the National Institute of Occupational Safety and Health (NIOSH) 582 course "Sampling and Evaluating Airborne Asbestos Dust". The PQP must be qualified to perform visual inspections as indicated in ASTM E 1368 and certified by the American Board of Industrial Hygienist(ABIH).

The PQP shall be onsite whenever asbestos activities are on going. The use of Industrial Hygiene Technicians (IHTs) to assist the PQP with the management and oversight of asbestos activities may be authorized by the Contracting Officer. The PQP is still responsible to conduct routine site visits to review asbestos controls and ensure onsite IHTs and abatement contractor personnel are in compliance with contract specifications and accepted asbestos plan. PQP shall visit the project site at least twice per month or weekly depending on the duration and level of risk of asbestos activities. PQP shall also be available whenever the PQP is needed for inspections/clearances, training requirements, emergencies, and other required times per contract specifications for the duration of asbestos activities.

IHTs shall have at least 3 years of field experience in asbestos abatement and air monitoring to include completed training from a legitimate Model Accreditation Plan as described in 40 CFR 763 as a Building Inspector, Contractor/Supervisor, Asbestos Worker and hands-on field experience in asbestos air monitoring techniques and management practices.

PQP shall provide the Contracting Officer an IHT delegation letter that will delegate project specific PQP roles and responsibilities to IHT as the onsite alternate PQP for review and acceptance. The delegation letter shall specify the reporting relationship between the PQP and IHT; statement from the PQP that the IHT meets asbestos training requirements, years of experience, and competencies for air monitoring; IHT roles and responsibilities for effective management of onsite abatement work; authorization to stop work for non-compliance with contract specifications or accepted asbestos abatement plan; statement the IHT has read the accepted asbestos plan and contract specifications; statement the IHT will serve as the extension of the PQP and the PQP assumes full responsibility of the IHT actions as the onsite alternate PQP. Delegation letter shall be signed by the PQP and onsite IHT and submitted to the Contracting Officer for record.

1.2.21 TEM

Refers to Transmission Electron Microscopy.

1.2.22 Time Weighted Average (TWA)

The TWA is an 8-hour time weighted average airborne concentration of asbestos fibers.

1.2.23 Wetting Agent

A chemical added to water to reduce the water's surface tension thereby increasing the water's ability to soak into the material to which it is applied. An equivalent wetting agent must have a surface tension of at most 2.9 Pa (0.00042 psi) when tested in accordance with ASTM D 1331.

1.3 REQUIREMENTS

1.3.1 Description of Work

The work covered by this section includes the handling and control of asbestos containing materials and describes some of the resultant procedures and equipment required to protect workers, the environment and occupants of the building or area, or both, from contact with airborne asbestos fibers.

The work also includes the disposal of any asbestos containing materials generated by the work. More specific operational procedures shall be outlined in the approved Asbestos Hazard Abatement Plan. Under normal conditions non-friable or chemically bound materials containing asbestos would not be considered hazardous; however, this material may release airborne asbestos fibers during demolition and removal and therefore must be handled in accordance with the removal and disposal procedures as specified herein. Provide negative pressure enclosure or glovebag techniques as outlined in this specification. The NAVY will evacuate the work area during the asbestos abatement work. All asbestos removal work shall be supervised by a PQP as specified herein.

1.3.2 Medical Requirements

Provide medical requirements including but not limited to medical surveillance and medical record keeping as listed in 29 CFR 1926.1101 and Industrial Safety and Health Law, Japan (“Roudou Anzen Eisei Hou”.).

1.3.2.1 Medical Examinations

Before exposure to airborne asbestos fibers, provide workers with a comprehensive medical examination as required by 29 CFR 1926.1101 or other pertinent State or local directives. This requirement must have been satisfied within the 12 months prior to the start of work on this contract. The same medical examination shall be given on an annual basis to employees engaged in an occupation involving asbestos and within 30 calendar days before or after the termination of employment in such occupation. Specifically identify x-ray films of asbestos workers to the consulting radiologist and mark medical record jackets with the word "ASBESTOS."

1.3.2.2 Medical Records

Maintain complete and accurate records of employees' medical examinations, medical records, and exposure data for a period of 50 years after termination of employment and make records of the required medical examinations and exposure data available for inspection.

1.3.3 Employee Training

Submit certificates prior to the start of work but after the main abatement submittal, signed by each employee indicating that the employee has received training in the proper handling of materials and wastes that contain asbestos in accordance with 40 CFR 763; understands the health implications and risks involved, including the illnesses possible from exposure to airborne asbestos fibers; understands the use and limits of the respiratory equipment to be used; and understands the results of monitoring of airborne quantities of asbestos as related to health and respiratory equipment as indicated in 29 CFR 1926.1101 on an initial and annual basis. Certificates shall be organized by individual worker, not grouped by type of certification. Post appropriate evidence of compliance with the training requirements of 40 CFR 763. Train all personnel involved in the asbestos control work in accordance with United States Environmental Protection Agency (USEPA) Asbestos Hazard Emergency Response Act (AHERA) training criteria. The Contractor shall document the training by providing: dates of training, training entity, course outline, names of instructors, and qualifications of instructors upon request by the Contracting Officer. Furnish each employee with respirator training and fit testing administered

by the PQP as required by 29 CFR 1926.1101. Fully cover engineering and other hazard control techniques and procedures.

1.3.4 Permits, Licenses, and Notifications

Obtain necessary permits and licenses in conjunction with asbestos, hauling (Tokubetsu Kanri Sangyo Haikibutsu Syuusyuu Unpangyo Kyokasho), and disposition (Tokubetsu Kanri Sangyo Haikibutsu Shobungyo Kyokasho), and furnish notification of such actions prior to the start of work. The activity Asbestos Program Manager (APM) shall notified of scope of asbestos work through the Contracting Officer. Notify the Contracting Officer in writing 20 working days prior to commencement of work. Submit copies of all notifications to the Contracting Officer. Notify the fire department 3 days prior to removing fire-proofing material from the building including notice that the material contains asbestos.

Of Letter of Ser 1000E/228 Submit abatement and disposal plans (English) for CFAY Environmental to review and approve. Submit manifest to CFAY Environmental, Code 1000E, Attn: Lily Mow upon disposals.

1.3.5 Environment, Safety and Health Compliance

In addition to detailed requirements of this specification, comply with those applicable laws, ordinances, criteria, rules, and regulations of regional, GOJ, prefectural, and local authorities regarding handling, storing, transporting, and disposing of asbestos waste materials. Comply with the applicable requirements of the current issue of Japanese lows, 29 CFR 1926.1101, 40 CFR 61-SUBPART A, ND OPNAVINST 5100.23, Letter of Ser 1000E/228, and DOD JEGS. Submit matters of interpretation of standards to the appropriate administrative agency for resolution before starting the work. Where the requirements of this specification, applicable laws, rules, criteria, ordinances, regulations, and referenced documents vary, the most stringent requirement as defined by the Government shall apply. The following laws, ordinances, criteria, rules and regulations regarding removal, handling, and storing, transporting and disposing of asbestos materials apply:

a. Air Pollution Control Law (“Taiki Osen Boushi Hou” Japanese Law)

b. Industrial Safety and Health Law (“Rou-ou Anzen Eisei Hou” Japanese Law)

c. Working Space Environmental Measuring Law (“Sagyou Kannkyou Sokutei Hou” Japanese Law)

d. Measuring Law (“Keiryou Hou” Japanese Law)

e. Waste Disposal and Public Cleansing Law (“Haikibutsu Shori Oyobi Seisou ni kansuru Houritsu” Japanese Law)

f. Letter of Ser 1000E/228

1.3.6 Respiratory Protection Program

Establish and implement a respirator program as required by ANSI Z88.2, 29 CFR 1926.1101, and 29 CFR 1926.103. Submit a written description of the program to the Contracting Officer. Submit a written program manual or

operating procedure including methods of compliance with regulatory statutes.

1.3.6.1 Respirator Program Records

Submit records of the respirator program as required by ANSI Z88.2, 29 CFR 1926.103, and 29 CFR 1926.1101.

1.3.7 Asbestos Hazard Control Supervisor

The Contractor shall be represented on site by a supervisor, trained using the model Contractor accreditation plan as indicated in the Federal statutes for all portions of the herein listed work.

1.3.8 Hazard Communication

Adhere to all parts of 29 CFR 1926.59 and provide the Contracting Officer with a copy of the Material Safety Data Sheets (MSDS) for all materials brought to the site.

1.3.9 Asbestos Hazard Abatement Plan

Prior to initiating asbestos abatement work on site, submit a detailed plan of the safety precautions such as lockout, tagout, tryout, fall protection, and confined space entry procedures and equipment and work procedures to be used in the encapsulation and removal of materials containing asbestos for approval. Perform asbestos abatement work in accordance with approved Asbestos Hazard Abatement Plan. The plan, not combined with other hazard abatement plans, shall be prepared, signed, and sealed by the PQP. Provide a Table of Contents for each abatement submittal, which shall follow the sequence of requirements in the contract. Such plan shall include but not be limited to the precise personal protective equipment to be used including, but not limited to, respiratory protection, type of whole-body protection and if reusable coveralls are to be employed decontamination methods (operations and quality control plan), the location of asbestos control areas including clean and dirty areas, buffer zones, showers, storage areas, change rooms, removal and encapsulation method, interface of trades involved in the construction, sequencing of asbestos related work, disposal plan, type of wetting agent and asbestos sealer to be used, locations of local exhaust equipment, planned air monitoring strategies, and a detailed description of the method to be employed in order to control environmental pollution. The plan shall also include (both fire and medical emergency) response plans. The Asbestos Hazard Abatement Plan must be approved in writing prior to starting any asbestos work. The Contractor, Asbestos Hazard Control Supervisor, and PQP shall meet with the Contracting Officer prior to beginning work, to discuss in detail the Asbestos Hazard Abatement Plan, including work procedures and safety precautions. Once approved by the Contracting Officer, the plan will be enforced as if an addition to the specification. Any changes required in the specification as a result of the plan shall be identified specifically in the plan to allow for free discussion and approval by the Contracting Officer prior to starting work. Disposal plan shall include the name and address the disposal facility, (and melting facility if utilized), certification of the facilities permit to dispose of asbestos and proof the Contractor will utilize the disposal facility for this contract.

1.3.10 Testing Laboratory

Submit the name, address, and telephone number of each testing laboratory selected for the sampling, analysis, and reporting of airborne concentrations of asbestos fibers along with certification that each laboratory is American Industrial Hygiene Association (AIHA) accredited and that persons counting the samples have been judged proficient by current inclusion on the AIHA Asbestos Analysis Registry (AAR) and successful participation of the laboratory in the Proficiency Analytical Testing (PAT) Program. Where analysis to determine asbestos content in bulk materials or transmission electron microscopy is required, submit evidence that the laboratory is accredited by the National Institute of Science and Technology (NIST) under National Voluntary Laboratory Accreditation Program (NVLAP) for asbestos analysis. The testing laboratory firm shall be independent of the asbestos contractor and shall have no employee or employer relationship which could constitute a conflict of interest.

1.3.11 Landfill Approval

.
Submit written evidence that the landfill for disposal is approved for asbestos contaminated materials disposal is a Government of Japan approved or licensed facility or landfill for each type of waste ACM. Submit to the Contracting Officer and Station’s Environmental Office, waste shipment records, prepared in accordance with paragraph “ACM Replacement Record” herein after, signed and dated by an agent of the landfill, certifying the amount of asbestos contaminated materials delivered to the landfill, within three(3) days after delivery.

1.3.12 Medical Certification

Provide a written certification for each worker and supervisor, signed by a licensed physician indicating that the worker and supervisor has met or exceeded all of the medical prerequisites listed herein, and in Industrial safety and Health Law Japan (Rohdou Anzen Eisei Hou), 29 CFR 1926.1101, and 29 CFR 1926.103 as prescribed by law. Submit certificates prior to the start of work but after the main abatement submittal.

1.3.13 ACM Replacement Record

After completion of construction, submit the ACM replacement record indicating following items;

a. Construction contract No.

b. Project title

c. Contractor’s name/address/phone No.

d. Date (when ACM replacement work has been completed)

e. Record-writer's name

f. Facility name, building No., room No., and name of utility system (where replacement of ACM has been conducted).

1.4 SUBMITTALS

Government approval is required for submittals with a "G" designation; submittals not having a "G" designation are for Contractor Quality Control approval and are submitted for information only. The following shall be submitted in accordance with Section 01 33 00.00 33 SUBMITTAL PROCEDURES:

SD-01 Preconstruction Submittals

Asbestos hazard abatement plan; G (FEAD)

SD-03 Product Data

Local exhaust equipment; G (FEAD)

Vacuums with HEPA filter; G (FEAD)

Protective clothing; G (FEAD)

Filters for vacuum cleaner and waste water; G (FEAD)

Respirators; G (FEAD)

Pressure differential automatic recording instrument; G (FEAD)

Amended water; G (FEAD)

Glovebags; G (FEAD)

Negative air machine and manometer; G (FEAD)

Material Safety Data Sheets (MSDS) for all materials proposed for transport to the project site; G (FEAD)

Encapsulants; G (FEAD)

SD-06 Test Reports

Air sampling results; G (FEAD)

Pressure differential recordings for local exhaust system; G (FEAD)

Asbestos disposal quantity report; G (FEAD)

Encapsulation test patches; G (FEAD)

Clearance sampling; G (FEAD)

SD-07 Certificates

Testing laboratory; G (FEAD)

Private qualified person documentation, including delegation letter; G (FEAD)

Contactor’s license; G (FEAD)

Competent person documentation; G (FEAD)

Worker’s license; G (FEAD)

Landfill approval; G (FEAD)

Employee training; G (FEAD)

Medical certification requirements; G (FEAD)

Completed and signed hazardous waste manifest from treatment or disposal facility; G (FEAD)

Respiratory Protection Program; G (FEAD)

Vacuum; G (FEAD)

Water filtration equipment; G (FEAD)

Ventilation systems; G (FEAD)

Other equipment used to contain airborne asbestos fibers; G (FEAD)

Chemical encapsulation sealers; G (FEAD)

Show compliance with ANSI Z9.2 by providing manufacturers' certification.

SD-11 Closeout Submittals

Notifications; G (FEAD)

Rental equipment; G (FEAD)

Respirator program records; G (FEAD)

Permits and licenses; G (FEAD)

Protective clothing decontamination quality control records; G (FEAD)

Protective clothing decontamination facility notification; G (FEAD)

ACM (asbestos containing materials) replacement record; G (FEAD)

1.5 QUALITY ASSURANCE

1.5.1 Private Qualified Person Documentation

Submit the name, address, and telephone number of the Private Qualified Person (PQP) selected to prepare the Asbestos Hazard Abatement Plan, direct monitoring and training, and documented evidence that the PQP has successfully completed training in and is accredited and where required is certified as, a Building Inspector, Contractor/Supervisor, Asbestos Worker, and Asbestos Project Designer as described by 40 CFR 763 and has successfully completed the National Institute of Occupational Safety and Health (NIOSH) 582 course "Sampling and Evaluating Airborne Asbestos Dust" or equivalent. The PQP and the asbestos contractor shall not have an employee/employer relationship or financial relationship which could constitute a conflict of interest. The PQP shall be a first tier subcontractor.

1.5.2 Worker's License

Submit training certification of Asbestos Workers as described by 40 CFR 763.

1.5.3 Competent Person Documentation

Submit training certification of Asbestos Project Designer or Asbestos Contractor/Supervisor as described by 40 CFR 763.

1.5.4 Contractor's License

Contractor shall have current contractor's license “Kensetsugyou-kyoka”. Submit the contractor's license issued by the governor of that prefecture or Minister of Land, Infrastructure and Transport (Minister of LIT).

1.5.5 Air Sampling Results

Complete fiber counting and provide resulting to the PQP for review within 16 hours of the "time off" of the sample pump. Notify the Contracting Officer immediately of any airborne levels of asbestos fibers in excess of the acceptable limits. Submit sampling results to the Contracting Officer and the affected Contractor employees where required by law within 3 working days, signed by the testing laboratory employee performing air sampling, the employee that analyzed the sample, and the PQP. Notify the Contractor and the Contracting Officer immediately of any variance in the pressure differential which could cause adjacent unsealed areas to have asbestos fiber concentrations in excess of 0.01 fibers per cubic centimeter or background whichever is higher. In no circumstance shall levels exceed 0.1 fibers per cubic centimeter.

1.5.6 Pressure Differential Recordings for Local Exhaust System

If the abatement plan requires negative pressure enclosures, provide a local exhaust system that creates a negative pressure of at least 0.51 mm (0.02 inches) of water relative to the pressure external to the enclosure and operate it continuously, 24 hours a day, until the temporary enclosure of the asbestos control area is removed. Submit pressure differential recordings for each work day to the PQP for review and to the Contracting Officer within 24 hours from the end of each work day.

1.5.7 Protective Clothing Decontamination Quality Control Records

Provide all records that document quality control for the decontamination of reusable outer protective clothing.

1.5.8 Protective Clothing Decontamination Facility Notification

Submit written evidence that persons who decontaminate, store, or transport asbestos contaminated clothing used in the performance of this contract were duly notified in accordance with 29 CFR 1926.1101.

1.6 EQUIPMENT

1.6.1 Rental Equipment

Provide a copy of the written notification to the rental company concerning the intended use of the equipment and the possibility of asbestos contamination of the equipment.

PART 2 PRODUCTS

2.1 ENCAPSULANTS

Shall conform to current USEPA requirements, shall contain no toxic or hazardous substances as defined in 29 CFR 1926.59, and shall conform to the following performance requirements.

2.1.1 Removal Encapsulants

Requirement	Test Standard
Flame Spread - 25, Smoke Emission – 50	ASTM E 84
Life Expectancy - 20 years	ASTM C 732 Accelerated Aging Test
Permeability - Minimum 0.4 perms	ASTM E 96/E 96M

PART 3 EXECUTION

3.1 EQUIPMENT

At all times, provide the Contracting Officer or the Contracting Officer's Representative, with at least two complete sets of personal protective equipment including decontaminating reusable coveralls as required for entry to and inspection of the asbestos control area. Provide equivalent training to the Contracting Officer or a designated representative as provided to Contractor employees in the use of the required personal protective equipment. Provide manufacturer's certificate of compliance for all equipment used to contain airborne asbestos fibers.

3.1.1 Respirators

Select respirators from those approved by the National Institute for Occupational Safety and Health (NIOSH), Department of Health and Human Services.

3.1.1.1 Respirators for Handling Asbestos

Provide personnel engaged in pre-cleaning, cleanup, handling, encapsulation and removal of asbestos materials with respiratory protection as indicated in 29 CFR 1926.1101 and 29 CFR 1926.103.

3.1.2 Exterior Whole Body Protection

3.1.2.1 Outer Protective Clothing

Provide personnel exposed to asbestos with disposable "non-breathable," or reusable "non-breathable" whole body outer protective clothing, head coverings, gloves, and foot coverings. Provide disposable plastic or rubber gloves to protect hands. Cloth gloves may be worn inside the plastic or rubber gloves for comfort, but shall not be used alone. Make sleeves secure at the wrists, make foot coverings secure at the ankles, and make clothing secure at the neck by the use of tape. Reusable whole body outer protective clothing shall be either disposed of as asbestos contaminated waste upon exiting from the asbestos control work area or be properly decontaminated.

3.1.2.2 Work Clothing

Provide cloth work clothes for wear under the outer protective clothing and foot coverings and either dispose of or properly decontaminate them as recommended by the PQP after each use.

3.1.2.3 Decontamination

Provide decontamination area or personal decontamination unit.

3.1.2.3.1 Decontamination Area Requirement

Provide two layers of vinyl sheet area or plastic room next to the control area and provide HEPA filtered vacuuming equipment. Rope off at the perimeter of the decontamination area and post with warning signs.

3.1.2.3.2 Personal Decontamination Unit Requirement

Provide a temporary, negative pressure unit with a separate decontamination locker room and clean locker room with a shower that complies with 29 CFR 1926.51(f)(4)(ii) through (V) in between for personnel required to wear whole body protective clothing. Provide two separate lockers for each asbestos worker, one in each locker room. Keep street clothing and street shoes in the clean locker. HEPA vacuum and remove asbestos contaminated disposable protective clothing while still wearing respirators at the boundary of the asbestos work area and seal in impermeable bags or containers for disposal. If the contractor use reusable protective clothing, HEPA vacuum and remove asbestos contaminated reusable protective clothing while still wearing respirators at the boundary of the asbestos work area, seal in two impermeable bags, label outer bag as asbestos contaminated waste, and transport for decontamination. Do not wear work clothing between home and work. Locate showers between the decontamination locker room and the clean locker room and require that all employees shower before changing into street clothes. Collect used shower water and filter with approved water filtration equipment to remove asbestos contamination. Dispose of filters and residue as asbestos waste. Discharge clean water to the sanitary system. Dispose of asbestos contaminated work clothing as asbestos contaminated waste or properly decontaminate as specified in the Contractor's Asbestos Hazard Abatement Plan. Decontamination units shall be physically attached to the asbestos control area. Build both a personnel decontamination unit and an equipment decontamination unit onto and integral with each asbestos control area.

3.1.2.4 Decontamination of Reusable Outer Protective Clothing

When reusable outer protective clothing is used, transport the double bagged clothing to a previously notified commercial/industrial decontamination facility for decontamination. Perform non-destructive testing to determine the effectiveness of asbestos decontamination. If representative sampling is used, ensure the statistical validity of the sampling results. If

representative sampling is used, reject any entire batch in which any of the pieces exceed 40 fibers per square millimeter. Inspect reusable protective clothing prior to use to ensure that it will provide adequate protection and is not or is not about to become ripped, torn, deteriorated, or damaged, and that it is not visibly contaminated. Notify, in writing, all personnel involved in the decontamination of reusable outer protective clothing as indicated in 29 CFR 1926.1101.

3.1.2.5 Eye Protection

Provide goggles to personnel engaged in asbestos abatement operations when the use of a full face respirator is not required.

3.1.3 Warning Signs and Labels

Provide bilingual warning signs printed in English and Japanese at all approaches to asbestos control areas. Locate signs at such a distance that personnel may read the sign and take the necessary protective steps required before entering the area. Provide labels and affix to all asbestos materials, scrap, waste, debris, and other products contaminated with asbestos.

3.1.3.1 Warning Sign

Provide vertical format conforming to 29 CFR 1926.200, and 29 CFR 1926.1101 minimum 500 by 355 mm (20 by 14 inches) displaying the following legend in the lower panel:

Legend	Notation
Danger	25 mm (1-inch) Sans Serif Gothic or Block
Asbestos	25 mm (1-inch) Sans Serif Gothic or Block
Cancer and Lung Disease Hazard	6 mm (1/4-inch) Sans Serif Gothic or Block
Authorized Personnel Only	6 mm (1/4-inch) Gothic
Respirators and Protective Clothing are Required in this Area	6 mm (1/4-inch) Gothic

Spacing between lines shall be at least equal to the height of the upper of any two lines.

3.1.3.2 Warning Labels

Provide bilingual labels conforming to 29 CFR 1926.1101 of sufficient size to be clearly legible, displaying the following legend:

DANGER

CONTAINS ASBESTOS FIBERS

AVOID CREATING DUST

CANCER AND LUNG DISEASE HAZARD

BREATHING ASBESTOS DUST MAY
CAUSE SERIOUS BODILY HARM

3.1.4 Local Exhaust System

If the approved abatement plan requires negative enclosure, provide a local exhaust system in the asbestos control area in accordance with ANSI Z9.2 and 29 CFR 1926.1101 that will provide at least four air changes per hour inside of the negative pressure enclosure. Local exhaust equipment shall be operated 24 hours per day, until the asbestos control area is removed and shall be leak proof to the filter and equipped with HEPA filters. Maintain a minimum pressure differential in the control area of minus 0.51 mm (0.02 inch) of water column relative to adjacent, unsealed areas. Provide continuous 24-hour per day monitoring of the pressure differential with a pressure differential automatic recording instrument. In no case shall the building ventilation system be used as the local exhaust system for the asbestos control area. Filters on exhaust system shall conform to AIHA Z9.2 and UL 586. The local exhaust system shall terminate out of doors and remote from any public access or ventilation system intakes.

3.1.5 Tools

Vacuums shall be leak proof to the filter and equipped with HEPA filters. Filters on vacuums shall conform to AIHA Z9.2 and UL 586. Do not use power tools to remove asbestos containing materials unless the tool is equipped with effective, integral HEPA filtered exhaust ventilation systems. Remove all residual asbestos from reusable tools prior to storage or reuse.

3.1.6 Rental Equipment

If rental equipment is to be used, furnish written notification to the rental agency concerning the intended use of the equipment and the possibility of asbestos contamination of the equipment.

3.1.7 Glovebags

If the approved abatement plan requires glovebag technique, Submit written manufacturers proof that glovebags will not break down under expected temperatures and conditions.

3.2 WORK PROCEDURE

Perform asbestos related work in accordance with 29 CFR 1926.1101, 40 CFR 61-SUBPART M, DOD JEGS, and as specified herein. Use wet removal procedures appropriate encapsulation procedures as listed in the asbestos hazard abatement plan and negative pressure enclosureand/or glovebag techniques. Personnel shall wear and utilize protective clothing and equipment as specified herein. Eating, smoking, drinking, chewing gum, tobacco, or applying cosmetics shall not be permitted in the asbestos work or control areas. Personnel of other trades not engaged in the encapsulation and removal and demolition of asbestos containing material shall not be exposed at any time to airborne concentrations of asbestos unless all the personnel protection and training provisions of this specification are complied with

by the trade personnel. Seal all roof top penetrations, except plumbing vents, prior to asbestos roofing work. Shut down the building heating, ventilating, and air conditioning system, cap the openings to the system, and provide temporary heating, and ventilation, and air conditioning prior to the commencement of asbestos work. Disconnect electrical service when encapsulation, wet removal is performed and provide temporary electrical service with verifiable ground fault circuit interrupter (GFCI) protection prior to the use of any water and encapsulant. If an asbestos fiber release or spill occurs outside of the asbestos control area, stop work immediately, correct the condition to the satisfaction of the Contracting Officer including clearance sampling, prior to resumption of work.

3.2.1 Protection of Existing Work to Remain

Perform work without damage or contamination of adjacent work. Where such work is damaged or contaminated as verified by the Contracting Officer using visual inspection or sample analysis, it shall be restored to its original condition or decontaminated by the Contractor at no expense to the Government as deemed appropriate by the Contracting Officer. This includes inadvertent spill of dirt, dust, or debris in which it is reasonable to conclude that asbestos may exist. When these spills occur, stop work immediately. Then clean up the spill. When satisfactory visual inspection and air sampling results are obtained from the PQP work may proceed at the discretion of the Contracting Officer.

3.2.2 Furnishings

Furniture and equipment will be removed from the area of work by the Government before asbestos work begins.

3.2.3 Precleaning

Wet wipe and HEPA vacuum all surfaces potentially contaminated with asbestos prior to establishment of an enclosure.

3.2.4 Asbestos Control Area Requirements

Provide asbestos control area, where ACM are removed.

3.2.4.1 Negative Pressure Enclosure

Use negative pressure enclosure technique, if the glovebag technique is infeasible for the removal.

Block and seal openings in areas where the release of airborne asbestos fibers can be expected. Establish an asbestos negative pressure enclosure with the use of curtains, portable partitions, or other enclosures in order to prevent the escape of asbestos fibers from the contaminated asbestos work area. Negative pressure enclosure development shall include protective covering of uncontaminated walls, and ceilings with a continuous membrane of two layers of minimum 0.15 mm 6-mil plastic sheet sealed with tape to prevent water or other damage. Provide two layers of 0.15 mm 6-mil plastic sheet over floors and extend a minimum of 300 mm 12 inches up walls. Seal all joints with tape. Provide local exhaust system in the asbestos control area. Openings will be allowed in enclosures of asbestos control areas for personnel and equipment entry and exit, the supply and exhaust of air for the local exhaust system and the removal of properly containerized asbestos

containing materials. Replace local exhaust system filters as required to maintain the efficiency of the system.

3.2.4.2 Glovebag

Use alternate techniques as indicated in 29 CFR 1926.1101. Establish designated limits for the asbestos control area with the use of rope or other continuous barriers, and maintain all other requirements for asbestos control areas. The PQP shall conduct personal samples of each worker engaged in asbestos handling (removal, disposal, transport and other associated work) throughout the duration of the project. If the quantity of airborne asbestos fibers monitored at the breathing zone of the workers at any time exceeds background or 0.01 fibers per cubic centimeter whichever is greater, stop work, evacuate personnel in adjacent areas or provide personnel with approved protective equipment at the discretion of the Contracting Officer. This sampling may be duplicated by the Government at the discretion of the Contracting Officer. If the air sampling results obtained by the Government differ from those obtained by the Contractor, the Government will determine which results predominate. If adjacent areas are contaminated as determined by the Contracting Officer, clean the contaminated areas, monitor, and visually inspect the area as specified herein.

3.2.5 Removal Procedures

Wet asbestos material with a fine spray of amended water during removal, cutting, or other handling so as to reduce the emission of airborne fibers. Remove material and immediately place in 0.15 mm 6 mil plastic disposal bags. Remove asbestos containing material in a gradual manner, with continuous application of the amended water or wetting agent in such a manner that no asbestos material is disturbed prior to being adequately wetted. Where unusual circumstances prohibit the use of 0.15 mm 6 mil plastic bags, submit an alternate proposal for containment of asbestos fibers to the Contracting Officer for approval. For example, in the case where both piping and insulation are to be removed, the Contractor may elect to wet the insulation, wrap the pipes and insulation in plastic and remove the pipe by sections. Asbestos containing material shall be containerized while wet. At no time shall asbestos material be allowed to accumulate or become dry. Lower and otherwise handle asbestos containing material as indicated in 40 CFR 61-SUBPART M.

3.2.6 Sealing Contaminated Items Designated for Disposal

Remove contaminated architectural, mechanical, and electrical appurtenances such as venetian blinds, full-height partitions, carpeting, duct work, pipes and fittings, radiators, light fixtures, conduit, panels, and other contaminated items designated for removal by completely coating the items with an asbestos lock-down encapsulant at the demolition site before removing the items from the asbestos control area. These items need not be vacuumed. The asbestos lock-down encapsulant shall be tinted a contrasting color. It shall be spray-applied by airless method. Thoroughness of sealing operation shall be visually gauged by the extent of colored coating on exposed surfaces. Lock-down encapsulants shall comply with the performance requirements specified herein.

3.2.6.1 Exposed Pipe Insulation Edges

Contain edges of asbestos insulation to remain that are exposed by a removal operation. Wet and cut the rough ends true and square with sharp tools and

then encapsulate the edges with a 6 mm 1/4 inch thick layer of non-asbestos containing insulating cement troweled to a smooth hard finish. When cement is dry, lag the end with a layer of non-asbestos lagging cloth, overlapping the existing ends by at least 100 mm 4 inches. When insulating cement and cloth is an impractical method of sealing a raw edge of asbestos, take appropriate steps to seal the raw edges as approved by the Contracting Officer.

3.2.7 Encapsulation Procedures

3.2.7.1 Preparation of Test Patches

Use airless spray at the lowest pressure and as recommended by the encapsulant manufacturer. Follow exactly the manufacturer's instructions for thinning recommendations, application procedures and rates. Curing time shall be not less than five days or that recommended by the manufacturer, whichever is more. A test patch shall be 0.8 square meter (9 square feet) in size.

3.2.7.2 Field Testing

Field test the encapsulation test patches in accordance with ASTM E 1494, paragraph "Required Field Test," in the presence of the Contracting Officer. Keep a written record of the testing procedures and test results. Upon successful testing of the encapsulant, submit a signed statement to the Contracting Officer certifying that the encapsulant is suitable for installation on the particular asbestos containing material.

3.2.7.3 Large-Scale Application

Apply encapsulant using the same equipment and procedures as employed for the test patches. Keep the encapsulant material stirred to prevent settling. Keep a clean work area. Change pre-filters in the ventilation equipment as soon as they appear clogged by encapsulant aerosol or pressure differential drops below 0.02 mmHg.

3.2.8 Air Sampling

Sampling of airborne concentrations of asbestos fibers shall be performed in accordance with 29 CFR 1926.1101 and as specified herein. Sampling performed in accordance with 29 CFR 1926.1101 shall be performed by the PQP. Unless otherwise specified, use NIOSH Method 7400 for sampling and analysis. Monitoring may be duplicated by the Government at the discretion of the Contracting Officer. If the air sampling results obtained by the Government differ from those results obtained by the Contractor, the Government will determine which results predominate.

3.2.8.1 Sampling Prior to Asbestos Work

Provide area air sampling and establish the baseline one day prior to the masking and sealing operations for each demolition, removal, or encapsulation site. Establish the background by performing area sampling in similar but uncontaminated sites in the building.

3.2.8.2 Sampling during Asbestos Work

The PQP shall provide personal and area sampling as indicated in 29 CFR 1926.1101 and governing environmental regulations. In addition, provided the same type of work is being performed, provide area sampling at least once every work shift close to the work inside the enclosure, outside the clean room entrance to the enclosure, and at the exhaust opening of the local exhaust system. If sampling outside the enclosure shows airborne levels have exceeded background or 0.01 fibers per cubic centimeter, whichever is greater, stop all work, correct the condition(s) causing the increase, and notify the Contracting Officer immediately. Where alternate methods are used, perform personal and area air sampling at locations and frequencies that will accurately characterize the evolving airborne asbestos levels.

The PQP shall provide personal sampling as indicated in 29 CFR 1926.1101. Where alternate methods are used, perform personal and area air sampling at locations and frequencies that will accurately characterize the evolving airborne asbestos levels.

3.2.8.3 Sampling after Final Clean-Up (Clearance Sampling)

Provide area sampling of asbestos fibers using aggressive air sampling techniques as defined in the EPA 560/5-85-024 and establish an airborne asbestos concentration of less than 0.01 fibers per cubic centimeter after final clean-up but before removal of the enclosure or the asbestos work control area. After final cleanup and the asbestos control area is dry but prior to clearance sampling, the PQP shall perform a visual inspection in accordance with ASTM E 1368 to ensure that the asbestos control and work area is free of any accumulations of dirt, dust, or debris. Prepare a written report signed and dated by the PQP documenting that the asbestos control area is free of dust, dirt, and debris and all waste has been removed. Perform at least three samples. The asbestos fiber counts from these samples shall be less than 0.01 fibers per cubic centimeter or be not greater than the background, whichever is greater. Should any of the final samples indicate a higher value, the Contractor shall take appropriate actions to re-clean the area and shall repeat the sampling and analysis at the Contractor's expense.

If glovebag is used to remove asbestos at outside of building, the Clearance Sampling and analysis will not be required.

3.2.8.4 Sampling After Final Clean-Up (Clearance Sampling for School)

Provide area sampling of asbestos fibers using aggressive air sampling techniques as defined in the EPA 560/5-85-024 and establish and airborne asbestos concentration of less than 70 structures per mm² in average of more than 13 samples after final clean-up but before removal of the enclosure or the asbestos work control area. After final cleanup and the asbestos control area is dry but prior to clearance sampling, the PQP shall perform a visual inspection in accordance with ASTM E 1368 to ensure that the asbestos control and work area is free of any accumulations of dirt, dust, or debris. Prepare a written report signed and dated by the PQP documenting that the asbestos control area is free of dust, dirt, and debris and all waste has been removed. Perform at least 13 samples. Use transmission electron microscopy (TEM) to analyze clearance samples and report the results in accordance with current NIOSH criteria. The asbestos fiber counts from these samples shall be less than 0.01 fibers per cubic centimeter or be not greater than the background, whichever is greater. TEM samples shall pass EPA AHERA requirements. Should any of the final samples indicate a higher value; the Contractor shall take appropriate actions to re-clean the area and shall repeat the sampling and TEM analysis at the Contractor's expense.

3.2.9 Lock-Down

Prior to removal of plastic barriers and after pre-clearance clean up of gross contamination, the PQP shall conduct a visual inspection of all areas affected by the removal and encapsulation in accordance with ASTM E 1368. Inspect for any visible fibers, and to ensure that encapsulants were applied evenly and appropriately. A post removal (lock-down) encapsulant shall then be spray applied to ceiling, walls, floors and other areas exposed in the removal area. The exposed area shall include but not be limited to plastic barriers, furnishings and articles to be discarded as well as dirty change room, air locks for bag removal and decontamination chambers.

3.2.10 Site Inspection

While performing asbestos engineering control work, the Contractor shall be subject to on-site inspection by the Contracting Officer who may be assisted by or represented by safety or industrial hygiene personnel. If the work is found to be in violation of this specification, the Contracting Officer or his representative will issue a stop work order to be in effect immediately and until the violation is resolved. All related costs including standby time required to resolve the violation shall be at the Contractor's expense.

3.3 CLEAN-UP AND DISPOSAL

3.3.1 Housekeeping

Essential parts of asbestos dust control are housekeeping and clean-up procedures. Maintain surfaces of the asbestos control area free of accumulations of asbestos fibers. Give meticulous attention to restricting the spread of dust and debris; keep waste from being distributed over the general area. Use HEPA filtered vacuum cleaners. DO NOT BLOW DOWN THE SPACE WITH COMPRESSED AIR. When asbestos removal is complete, all asbestos waste is removed from the work-site, and final clean-up is completed, the Contracting Officer will attest that the area is safe before the signs can be removed. After final clean-up and acceptable airborne concentrations are attained but before the HEPA unit is turned off and the enclosure removed, remove all pre-filters on the building HVAC system and provide new pre-filters. Dispose of filters as asbestos contaminated materials. Reestablish HVAC mechanical, and electrical systems in proper working order. The Contracting Officer will visually inspect all surfaces within the enclosure for residual material or accumulated dust or debris. The Contractor shall re-clean all areas showing dust or residual materials. If re-cleaning is required, air sample and establish an acceptable asbestos airborne concentration after re-cleaning. The Contracting Officer must agree that the area is safe in writing before unrestricted entry will be permitted. The Government shall have the option to perform monitoring to determine if the areas are safe before entry is permitted.

3.3.2 Title to Materials

All ACM waste materials, except as specified otherwise, shall become the property of the Contractor and shall be handled and disposed of as specified in applicable Government of Japan and the U.S. laws and regulations and herein.

3.3.3 Asbestos Handling

3.3.3.1 Procedure for Transport

Collect asbestos waste, asbestos contaminated water, scrap, debris, bags, containers, equipment, and asbestos contaminated clothing which may produce airborne concentrations of asbestos fibers and place in sealed fiber-proof, waterproof, non-returnable containers (e.g. double plastic bags 0.15 mm 6 mils thick). Wastes within the containers must be adequately wet in accordance with JEGS. Affix approved bi-lingual warning labels in accordance with the JEGS.

The Contractor must transport the asbestos waste in accordance with the Government of Japan, Prefectural and local laws.For temporary storage prior to disposal, properly wetted and labeled bags shall be stored in an asbestos waste load-out unit or in a storage/transportation conveyance (i.e., dumpster, roll-off waste boxes, etc.) in a manner acceptable to and in an area assigned by the CO. Asbestos storage units/conveyances shall be labeled “ASBESTOS WASTE ONLY” in both English and Japanese. The storage unit/conveyances shall be managed in such away as to prevent unauthorized entry, breaching of bags or wrappings and comingling with non-asbestos wastes.

3.3.3.2 Off-Base Disposal

The Contractor shall dispose all asbestos waste off-base. Asbestos waste disposal shall be at a Government of Japan (GOJ) approved or licensed facility or landfill for each type of waste ACM. Type I waste ACM may be melted and disposed of in a landfill designated by the GOJ to receive treated asbestos waste. Prior to commencement of work the contractor shall provide to the CO the name and address the disposal facility, (and melting facility if utilized), certification of the facilities permit to dispose of asbestos and proof the Contractor will utilize the disposal facility for the specified contract

3.3.3.3 Asbestos Disposal Quantity Report

Allow the Contracting Officer or authorized representative to inspect, record and report the amount of asbestos containing material removed and released for disposal on a daily basis. Ensure to submit the final disposal quantity report to the Contracting Officer. Copies of all the waste asbestos material manifests document(s) shall be submitted to the Contracting Officer and station’s Environmental Office.

-- End of Section --

SECTION 02 83 13.00 33

LEAD IN CONSTRUCTION

PART 1 GENERAL

1.1 REFERENCES

The publications listed below form a part of this specification to the extent referenced. The publications are referred within the text by the basic designation only. The latest version of the publication at time of award shall be used.

AMERICAN NATIONAL STANDARDS INSTITUTE (ANSI)

ANSI Z9.2	Fundamentals Governing the Design and Operation of Local Exhaust Systems
ANSI Z88.2	Respiratory Protection

CODE of Federal Regulations (CFR)

29 CFR 1926.21	Safety Training and Education
29 CFR 1926.33	Access to Employee Exposure and Medical
29 CFR 1926.55	Gases, Vapors, Fumes, Dusts, and Mists
29 CFR 1926.59	Hazard Communication
29 CFR 1926.62	Lead Exposure in Construction
29 CFR 1926.65	Hazardous Waste Operations and Emergency Response
29 CFR 1926.103	Respiratory Protection
29 CFR 1910.134	Respiratory Protection
40 CFR 745	Lead; Requirements for Lead-Based Paint Activities

MILITARY SPECIFICATIONS (MIL)

MIL-A-22262	Abrasive Blasting Media Ship Hull Blast Cleaning

DEPARTMENT OF HOUSING AND URBAN DEVELOPMENT (HUD)

HUD Guidelines	Guidelines for the Evaluation and Control of Lead-Based Paint Hazards in Housing

UNDERWRITERS LABORATORIES INC. (UL)

UL 586	High-Efficiency, Particulate, Air Filter Units

DEPARTMENT OF DEFENCE (DOD)

Japan Environmental Governing Standards (JEGS), by US Forces Japan

DOD 4717.05 G	Overseas Environmental Baseline Guidance Document
COMFLEACTINST 5090.1	Hazardous Waste (HW) Management Plan for Commander, Fleet Activities (COMFLEACT), Yokosuka/Yokohama, Ikego and Outlying Areas

1.2 DEFINITIONS

1.2.1 Action Level

Employee exposure, without regard to use of respirators, to an airborne concentration of lead of 30 micrograms per cubic meter of air averaged over an 8 hour period in an occupational/industrial environment.

1.2.2 Area Sampling

Sampling of lead concentrations within the lead control area and inside the physical boundaries which is representative of the airborne lead concentrations but is not collected in the breathing zone of personnel.

1.2.3 Competent Person (CP)

As used in this section, refers to a person employed by the Contractor who is trained in the recognition and control of lead hazards in accordance with current federal regulations. An industrial hygienist or safety professional certified for comprehensive practice by the American Board of Industrial Hygiene or by the Board of Certified Safety Professionals is the best choice.

1.2.4 Contaminated Room

Refer to a room for removal of contaminated personal protective equipment (PPE).

1.2.5 Decontamination (Decon) Area

Decontamination area is for changing clothes and cleaning-up tools and equipment.

1.2.6 Decontamination Shower Facility

That facility that encompasses a clean clothing storage room, and a contaminated clothing storage and disposal rooms, with a shower facility in between.

1.2.7 Eight-Hour Time Weighted Average (TWA)

Airborne concentration of lead to which an employee is exposed, averaged over an 8 hour workday as indicated in 29 CFR 1926.62.

1.2.8 High Efficiency Particulate Air (HEPA) Filter Equipment

HEPA filtered vacuuming equipment with a UL 586 filter system capable of collecting and retaining lead-contaminated paint dust. A high efficiency particulate filter means 99.97 percent efficient against 0.3 micron or larger size particles.

1.2.9 Lead

Metallic lead, inorganic lead compounds, and organic lead soaps. Excludes other forms of organic lead compounds.

1.2.10 Lead Based Paint (LBP)

Paint or other surface coatings that contain lead equal to or exceeding 1.0 milligram per cm2, or 0.5 percent by weight or 5,000 ppm by weight.

Note: LBP waste (≥0.3 mg/L) determination must be made by a Toxicity Characteristic Leaching Procedure (TCLP).

1.2.11 Lead Control Area

A system [of control methods] to prevent the spread of lead dust, paint chips or debris to adjacent areas that may include temporary containment, floor or ground cover protection, physical boundaries, and warning signs to prevent unauthorized entry of personnel. HEPA filtered local exhaust equipment may be used as engineering controls to further reduce personnel exposures or building/outdoor environmental contamination.

1.2.12 Lead Permissible Exposure Limit (PEL)

Fifty micrograms per cubic meter of air as an 8 hour time weighted average as determined by 29 CFR 1926.62. If an employee is exposed for more than eight hours in a work day, the PEL shall be determined by the following formula:

PEL (micrograms/cubic meter of air) = 400/No. hrs worked per day

1.2.13 Material Containing Lead/Paint with Lead (MCL/PWL)

Any material, including paint, which contains lead as determined by the testing laboratory using a valid test method. The requirements of this section does not apply if no detectable levels of lead are found using a quantitative method for analyzing paint or MCL using laboratory instruments with specified limits of detection (usually 0.01 %). An X-Ray Fluorescent (XRF) instrument is not considered a valid test method.

1.2.14 Personal Sampling

Sampling of airborne lead concentrations within the breathing zone of an employee to determine the 8 hour time weighted average concentration in accordance with 29 CFR 1926.62. Samples shall be representative of the employees' work tasks. Breathing zone shall be considered an area within a hemisphere, forward of the shoulders, with a radius of 150 to 225 mm (six to nine inches) and centered at the nose or mouth of an employee.

1.2.15 Physical Boundary

Area physically roped or partitioned off around lead control area to limit unauthorized entry of personnel.

1.3 DESCRIPTION

1.3.1 Description of Work

Construction activities impacting PWL or material containing lead which are covered by this specification include the demolition and/or removal of material containing lead as indicated on the drawings or specifications in Task Order.

The Contractor shall remove LBP at surfaces to be torch cut, to be welded, to be machine sanded or grinding without HEPA exhaust control, sanded, peeled surfaces to be re-painted, and surfaces where LBP removal work is necessary to perform this project.

1.3.2 Coordination with Other Work

The contractor shall coordinate with work being performed in adjacent areas. Coordination procedures shall be explained in the Plan and shall describe how the Contractor will prevent lead exposure to other contractors and/or Government personnel performing work unrelated to lead activities.

1.4 SUBMITTALS

Government approval is required for submittals with a "G" designation; submittals not having a "G" designation are for Contractor Quality Control approval. Submit the following in accordance with Section 01 33 00.00 33 "SUBMITTAL PROCEDURES":

SD-01 Preconstruction Submittals

Lead Compliance Plan including CP approval (signature, date, and certification number); G (FEAD)

Competent Person qualifications; G (FEAD)

Training Certification of workers and supervisors; G (FEAD)

Lead waste management plan; G (FEAD)

Material safety data sheets for all chemicals; G (FEAD)

Written evidence that Treatment, storage or disposal (TSD) facility is approved for lead disposal; G (FEAD)

Certification of Medical Examinations; G (FEAD)

SD-03 Manufacturer's Catalog Data

Vacuum filters; G (FEAD)

Respirators; G (FEAD)

Material for chemical removal method; G (FEAD)

SD-06 Test Reports

Sampling results; G (FEAD)

Occupational and Environmental Assessment Data Report; G (FEAD)

SD-07 Certificates

Testing laboratory qualifications; G (FEAD)

Occupant Notification; G (FEAD)

Third party consultant qualifications; G (FEAD)

Clearance Certification; G (FEAD)

Employee training certification; G (FEAD)

SD-08 Instructions

Chemicals removal method; G (FEAD

SD-11 Closeout Submittals

Completed and signed hazardous waste manifest from treatment or disposal facility; G (FEAD)

1.5 QUALITY ASSURANCE

1.5.1 Qualifications

1.5.1.1 Competent Person (CP)

Submit name, address, and telephone number of the CP selected to perform responsibilities specified in paragraph titled "Competent Person (CP) Responsibilities." Provide previous experience of the CP. Submit proper documentation that the CP is trained and licensed in accordance with federal, or local laws.

1.5.1.2 Training Certification

Submit a certificate for each employee, signed and dated by the approved training source, stating that the employee has received the required lead training.

1.5.1.3 Testing Laboratory

Submit the name, address, and telephone number of the testing laboratory selected to perform the air, wipe, and soil analysis, testing, and reporting of airborne concentrations of lead. Use a laboratory participating in the EPA National Lead Laboratory Accreditation Program (NLLAP) by being accredited by either the American Association for Laboratory Accreditation (A2LA) or the American Industrial Hygiene Association (AIHA) and that is successfully participating in the Environmental Lead Proficiency Analytical

Testing (ELPAT) program to perform sample analysis. Laboratories selected to perform blood lead analysis shall be OSHA approved.

1.5.1.4 Third Party Consultant Qualifications

Submit the name, address and telephone number of the third party consultant selected to perform the wipe sampling for determining concentrations of lead in dust. Submit proper documentation that the consultant is trained and certified as an inspector technician or inspector/risk assessor by the USEPA authorized State (or local) certification and accreditation program.

1.5.2 Requirements

1.5.2.1 Competent Person (CP) Responsibilities

a. Verify training meets all federal, and local requirements.

b. Review and approve Lead Compliance Plan for conformance to the applicable referenced standards.

c. Continuously inspect PWL or MCL work for conformance with the approved plan.

d. Perform (or oversee performance of) air [and wipe] sampling. Recommend upgrades or downgrades (whichever is appropriate based on exposure) on the use of PPE (respirators included) and engineering controls.

e. Ensure work is performed in strict accordance with specifications at all times.

f. Control work to prevent hazardous exposure to human beings and to the environment at all times.

g. Supervise final cleaning of the lead control area, take clearance wipe samples if necessary; review clearance sample results and make recommendations for further cleaning.

h. Certify the conditions of the work as called for elsewhere in this specification.

1.5.2.2 Lead Compliance Plan

Prior to initiating LBP work on site, submit a detailed job-specific plan of the work procedures to be used in the disturbance of PWL or MCL, and in the removal/control of LBP. Perform the work in accordance with approved lead compliance plan. The plan shall include a sketch showing the location, size, and details of lead control areas, critical barriers, physical boundaries, location and details of decontamination facilities, viewing ports, and mechanical ventilation system. Include a description of equipment and materials, work practices, controls and job responsibilities for each activity from which lead is emitted. Include in the plan, eating, drinking, smoking, hygiene facilities and sanitary procedures, interface of trades, sequencing of lead related work, collected waste water and dust containing lead and debris, paint debris disposal plan, air sampling, respirators, personal protective equipment, and a detailed description of the method of containment of the operation to ensure that airborne lead concentrations of 30 micrograms per cubic meter of air and baseline lead dust concentrations

are not reached or exceeded outside of the lead control area. Include site preparation, cleanup and clearance procedures. Include occupational and environmental sampling, training and strategy, sampling and analysis strategy and methodology, frequency of sampling, duration of sampling, and qualifications of sampling personnel in the air sampling portion of the plan. Include a description of arrangements made among contractors on multi-contractor worksites to inform affected employees and to clarify responsibilities to control exposures.

The plan shall include methodology to be used to prevent contamination to air, water or land. If a paint removal project has the potential to contribute to environmental contamination the contractor may be required to conduct air, water and soil sampling prior to, during, and after the removal work. Submit plan in Adobe portable document format (.pdf) in the following format Bldg_xxxx Floor_x_Lead_Removal_Plan_ddmmyyyy.

For outdoor LBP projects the contractor shall develop and provide to the CO an air, water and soil sampling plan. The plan shall include methodology to be used to prevent contamination to air, water or land. If a paint removal project has the potential to contribute to environmental contamination the contractor may be required to conduct air, water and soil sampling prior to, during, and after the removal work.

In occupied buildings, the plan shall also include an occupant protection program that describes the measures that will be taken during the work to notify and protect the building occupants.

After project completion, submit an LBP replacement record indicating following items;

a. Construction contract No.,
b. Project title,
c. Contractor’s name/address/phone No.,
d. Date (when LBP removal work has been completed),
e. Record-writer's name,
f. Facility name, building No., room No., and name of utility system (where replacement has been conducted).
g. Certification replacement materials were “LBP free” (contained less than 0.06% lead by weight).

The report shall be prepared and submitted in Adobe portable document format (.pdf) for each building and floor. The file name format for each report is Bldg_xxxx_ Floor_x_Lead_Removal_Report_ddmmyyyy. For example:

Bldg_5016_Floor_1_Lead_Removal_Report_11212010.pdf
Bldg_5016_Floor_2_Lead_Removal_Report_11232010.pdf

1.5.2.3 Occupational and Environmental Assessment Data Report

If initial monitoring is necessary, submit occupational and environmental sampling results to the Contracting Officer within three working days of collection, signed by the testing laboratory employee performing the analysis, the employee that performed the sampling, and the CP.

a. The initial monitoring shall represent each job classification, or if working conditions are similar to previous jobs by the same employer, provide previously collected exposure data that can be used to estimate

worker exposures per 29 CFR 1926.62. The data shall represent the worker's regular daily exposure to lead for stated work.

b. Submit worker exposure data gathered during the task based trigger operations of 29 CFR 1926.62 with a complete process description. This includes manual demolition, manual scraping, manual sanding, heat gun, power tool cleaning, rivet busting, cleanup of dry expendable abrasives, abrasive blast enclosure removal, abrasive blasting, welding, cutting and torch burning where lead containing coatings are present.

c. The initial assessment shall determine the requirement for further monitoring and the need to fully implement the control and protective requirements including the lead compliance plan per 29 CFR 1926.62.

1.5.3 Medical Examinations

Before exposure to lead-contaminated dust, provide workers with a comprehensive medical examination to check blood lead levels under 40µg/dl. The examination will not be required if adequate records show that employees have been examined within the last year. Maintain complete and accurate medical records of employees for a period of at least 30 years or for the duration of employment plus 30 years, whichever is longer.

1.5.3.1 Training

Train each employee performing work that disturbs lead, removes LBP, who performs MCL/PWL/LBP disposal, and air sampling operations prior to the time of initial job assignment and annually thereafter, in accordance with 29 CFR 1926.21, 29 CFR 1926.62, and local regulations where appropriate.

1.5.3.2 Respiratory Protection Program

a. Provide each employee required to wear a respirator a respirator fit test at the time of initial fitting and at least annually thereafter as required by 29 CFR 1926.62.

b. Establish and implement a respiratory protection program as required by ANSI Z88.2, 29 CFR 1926.103, 29 CFR 1926.62, and 29 CFR 1926.55.

1.5.3.3 Hazard Communication Program

Establish and implement a Hazard Communication Program as required by 29 CFR 1926.59.

1.5.3.4 Lead Waste Management/ LBP disposal Plan

The Lead Waste Management/ LBP Disposal Plan shall comply with DoD, Japan and local regulations. The Plan shall be submitted for review and comment to the CFAY PWD Environment Office through the Contracting Officer. The plan shall be in English and include:

a. Cover Sheet with Project Number, Installation, Location, Contractor Information and Point of Contact

b. Identification and classification of LBP as either as a hazardous waste or solid waste.

c. Name, address, and phone number of the testing laboratory and copies of certification or signed statement specifying laboratory accreditation for performance of TCLP analysis.

d. Copy of the laboratory Toxicity Characteristic Leaching Procedure (TCLP) results.

e. Estimated quantities of each type of waste to be generated and disposed.

f. Names and qualifications of each contractor personnel that will be transporting, storing, and disposing of the wastes. Include a 24-hour point of contact.

g. Names and qualifications (experience and training) of personnel who will be working on-site with industrial wastes.

h. List of waste handling equipment to be used in performing the work, to include cleaning, storage, packaging, volume reduction, and transport equipment.

i. Spill prevention, containment, and cleanup contingency measures, including a health and safety plan to be implemented in accordance with 29 CFR 1926.65.

j. Work plan and schedule for waste containment, removal and disposal. Wastes shall be cleaned up and containerized daily.

k. For disposal of LBP as a solid waste provide the name and address of the disposal facility, certification of the facilities permit and proof the contractor will utilize the disposal facility for the specified contract.

l. Manufacturer specific English Material Safety Data Sheets (MSDS) for any materials to be used to include chemical strippers.

m. Estimated cost of LBP disposal according to this plan. For hazardous waste disposal through the US Government provide an estimate of the costs as if it were disposed of locally.

1.5.3.5 Environmental, Safety and Health Compliance

In addition to the detailed requirements of this specification, comply with laws, ordinances, rules, and regulations of the Governments of Japan and the U.S. and local authorities regarding lead. Comply with the applicable requirements of the current issue of 29 CFR 1926.62. Submit matters regarding interpretation of standards to the Contracting Officer for resolution before starting work. Where specification requirements and the referenced documents vary, the most stringent requirement shall apply. The following local laws, ordinances, criteria, rules and regulations regarding removing, handling, storing, transporting, and disposing of lead-contaminated materials apply:

a. Japan Law, Waste management Act “Haikibutsu Shori hou”

b. Japanese Law, land pollution control act “Dojyou osen boushi hou”

c. Japan Environmental Governing Standards

1.5.4 Pre-Construction Conference

Along with the CP, meet with the Contracting Officer to discuss in detail the Lead Waste Management Plan, the Lead Compliance Plan and the lead based paint removal plan, including procedures and precautions for the work.

1.6 EQUIPMENT

1.6.1 Respirators

Furnish appropriate respirators approved by the Mine Safety and Health Administration (MSHA) and the National Institute for Occupational Safety and Health (NIOSH), Department of Health and Human Services, for use in atmospheres containing lead dust. Respirators shall comply with the requirements of 29 CFR 1926.62.

1.6.2 Special Protective Clothing

Furnish personnel who will be exposed to lead-contaminated dust with proper disposable protective whole body clothing, head covering, gloves, and foot coverings as required by 29 CFR 1926.62. Furnish proper disposable plastic or rubber gloves to protect hands. Reduce the level of protection only after obtaining approval from the CP.

1.6.3 Rental Equipment Notification

If rental equipment is to be used during lead based paint handling and disposal, notify the rental agency in writing concerning the intended use of the equipment. Furnish a copy of the written notification to the Contracting Officer.

1.6.4 Vacuum Filters

UL 586 labeled HEPA filters.

1.6.5 Equipment for Government Personnel

Furnish the Contracting Officer with two complete sets of personal protective equipment (PPE) daily, as required herein, for entry into and inspection of the lead removal work within the lead controlled area. Personal protective equipment shall include disposable whole body covering, including appropriate foot, head, eye, and hand protection. PPE shall remain the property of the Contractor. The Government will provide respiratory protection for the Contracting Officer.

1.7 PROJECT/SITE CONDITIONS

1.7.1 Protection of Existing Work to Remain

Perform work without damage or contamination of adjacent areas. Where existing work is damaged or contaminated, restore work to its original condition or better as determined by the Contracting Officer.

PART 2 PRODUCTS

2.1 CHEMICALS

Submit applicable Material Safety Data Sheets for all chemicals used in paint removal work. Use the least toxic product approved by the Contracting Officer.

2.1.1 Chemical Stripper

Shall consist of chemical stripper and non-phosphate ion detergent for cleaning, in accordance with the approved manufacturer. Chemical stripper shall not contain dichloromethane and methylene chloride, shall not produce harmful fumes for workers, and shall not burn skin of workers.

PART 3 EXECUTION

3.1 PREPARATION

3.1.1 Protection

3.1.1.1 Notification

a. Notify the Contracting Officer 20 days prior to the start of any paint removal work.

b. Occupant Notification(Military Family Housing and child-occupied facilities):

Submit occupant written acknowledgment of the delivery of lead hazard information pamphlet EPA 740-K-10-001 "The Lead-Safe Certified Guide to Renovate Right") prior to commencing the renovation work for each affected unit using language provided in 40 CFR 745 Subpart E.

3.1.1.2 Lead Control Area Requirements

a. Boundary Requirements - Provide physical boundaries around the lead control area by roping off the area designated in the work plan or providing curtains, portable partitions or other enclosures to ensure that lead will not escape outside of the lead control area.

b. Warning Signs - Provide warning signs at approaches to lead control areas. Locate signs at such a distance that personnel may read the sign and take the necessary precautions before entering the area. Signs shall comply with the requirements of 29 CFR 1926.62.

3.1.1.3 Furnishings

The Government will remove furniture and equipment from the building before lead work begins.

When furniture/ equipment remain in the lead control area, protect and cover furnishings.

3.1.1.4 Heating, Ventilating and Air Conditioning (HVAC) Systems

Shut down, lock out, and isolate HVAC systems that supply, exhaust, or pass through the lead control areas. Seal intake and exhaust vents in the lead control area with 0.15 mm (6 mil) plastic sheet and tape. Seal seams in HVAC components that pass through the lead control area. Openings to A/C ducts shall be capped with two layers of plastic sheet.

3.1.1.5 Decontamination Shower Facility

Provide clean and contaminated change rooms and shower facilities in accordance with this specification.

3.1.1.6 Decontamination Area

Provide two layers of vinyl sheet area or plastic room next to the control area and provide HEPA filtered vacuuming equipment. Rope off at the perimeter of the decontamination area and post with warning signs.

3.1.1.7 Eye Wash Station

Where eyes may be exposed to injurious corrosive materials, suitable facilities for quick drenching or flushing of the eyes shall be provided within the work area.

3.1.1.8 Mechanical Ventilation System

a. Use adequate ventilation to control personnel exposure to lead in accordance with 29 CFR 1926.62.

b. To the extent feasible, use fixed local exhaust ventilation connected to HEPA filter or other collection systems, approved by the CP. Local exhaust ventilation systems shall be designed, constructed, installed, and maintained in accordance with ANSI Z9.2 and UL 586.

c. Vent local exhaust outside the building only and away from building ventilation intakes.

d. Use locally exhausted, power actuated tools or manual hand tools.

3.1.1.9 Personnel Protection

Personnel shall wear and use protective clothing and equipment as specified herein. Eating, smoking, or drinking or application of cosmetics is not permitted in the lead control area. No one will be permitted in the lead control area unless they have been appropriately trained and provided with protective equipment.

3.2 ERECTION

3.2.1 Lead Control Area Requirements

Establish a lead control area by completely establishing barriers and physical boundaries around the area or structure where PWL or MCL removal operations will be performed.

Full containment - Contain removal operations by the use of critical barriers, and HEPA filtered exhaust or a negative pressure enclosure system with decontamination facilities and with HEPA filtered exhaust if required

by the CP. For containment areas larger than 100 square meters (1,000 square feet) install a minimum of two 450 mm (18 inch) square viewing ports. Locate ports to provide a view of the required work from the exterior of the enclosed contaminated area. Glaze ports with laminated safety glass.

3.3 APPLICATION

3.3.1 Lead Work

Perform lead work in accordance with approved Lead Compliance Plan. Use procedures and equipment required to limit occupational exposure and environmental contamination with lead when the work is performed in accordance with 29 CFR 1926.62 or 40 CFR 745, and as specified herein. Dispose of removed paint chips, all PWL or MCL and associated waste in compliance with DoD, Japan, and local regulations.

3.3.2 Paint with Lead or Material Containing Lead Removal

Provide methodology for removing lead in the Lead Compliance Plan. Select lead removal processes to minimize contamination of work areas outside the control area with lead-contaminated dust or other lead-contaminated debris or waste and to ensure that unprotected personnel are not exposed to hazardous concentrations of lead. Describe this removal process in the Lead Compliance Plan.

3.3.2.1 Paint with Lead or Material Containing Lead - Indoor Removal

Perform manual mechanical removal and thermal cutting in the lead control areas using enclosures, barriers or containments. Collect residue for disposal in accordance with federal, JEGS and local requirements

3.3.2.2 Paint with Lead or Material Containing Lead - Outdoor Removal

Perform outdoor removal as indicated in federal, and local regulations and in the Lead Compliance Plan. The worksite preparation (barriers or containments) shall be job dependent and presented in the Lead Compliance Plan. Include in the work plan the methodology to be used to prevent environmental contamination and provide an air, water and soil sampling plan.

3.3.3 Personnel Exiting Procedures

Whenever personnel exit the lead-controlled area, they shall perform the following procedures and shall not leave the work place wearing any clothing or equipment worn in the control area:

a. Vacuum all clothing before entering the decontamination area or the contaminated change room.

b. Remove protective clothing in the contaminated change room, and place them in an approved impermeable disposal bag.

c. Wash hands and face at the site, don appropriate disposable or uncontaminated reusable clothing.

d. Change to clean clothes prior to leaving the clean clothes storage area.

3.4 FIELD QUALITY CONTROL

3.4.1 Tests

3.4.1.1 Air and Wipe Sampling

Conduct sampling for lead in accordance with 29 CFR 1926.62 and as specified herein. Air and wipe sampling shall be directed or performed by the CP.

a. The CP shall be on the job site directing the air and wipe sampling and inspecting the PWL, MCL or LBP removal work to ensure that the requirements of the contract have been satisfied during the entire PWL, MCL or LBP removal operation.

b. Collect personal air samples on employees who are anticipated to have the greatest risk of exposure as determined by the CP. In addition, collect air samples on at least twenty-five percent of the work crew or a minimum of two employees, whichever is greater, during each work shift.

c. Submit results of air samples, signed by the CP, within 72 hours after the air samples are taken.

d. Conduct area air sampling daily, on each shift in which lead-based paint removal operations are performed, in areas immediately adjacent to the lead control area. Sufficient area monitoring shall be conducted to ensure unprotected personnel are not exposed at or above 30 micrograms per cubic meter of air. If 30 micrograms per cubic meter of air is reached or exceeded, stop work, correct the conditions(s) causing the increased levels. Notify the Contracting Officer immediately. Determine if condition(s) require any further change in work methods. Removal work shall resume only after the CP and the Contracting Officer give approval. For outdoor operations, at least one sample on each shift shall be taken on the downwind side of the lead control area.

e. Before any work begins, and analyze baseline wipe samples in accordance with methods defined by federal, State, and local standards inside and outside of the physical boundary to assess the degree of dust contamination in the facility prior to lead disturbance or removal.

f. Surface Wipe Samples - Collect surface wipe samples on floors at a location no greater than 3 m (10 feet) outside the lead control area at a frequency of once per day while lead removal work is conducted in occupied buildings except demolished or industrial buildings. Surface wipe results shall meet criteria in paragraph "Clearance Certification.

3.4.1.2 Sampling After Removal

After the visual inspection, collect wipe samples to determine the lead content of settled dust in micrograms per square meter foot of surface area

3.4.1.3 Testing of Material Containing Lead Residue

Test residue in accordance with JEGS for hazardous waste.

3.5 CLEANING AND DISPOSAL

3.5.1 Cleanup

Maintain surfaces of the lead control area free of accumulations of paint chips, dust and debris. Restrict the spread of dust and debris; keep waste from being distributed over the work area. Do not dry sweep or use pressurized air to clean up the area. At the end of each shift and when the paint removal or lead operation has been completed, clean the controlled area of visible contamination by vacuuming with a HEPA filtered vacuum cleaner, wet mopping the area and wet wiping the area as indicated by the Lead Compliance Plan. Reclean areas showing dust or residual paint chips or debris. After visible dust, chips and debris is removed, wet wipe and HEPA vacuum all surfaces in the controlled area. If adjacent areas become contaminated at any time during the work, clean, visually inspect, and then wipe sample all contaminated areas. The CP shall then certify in writing that the area has been cleaned of lead contamination before clearance testing.

3.5.1.1 Clearance Certification

The CP shall certify in writing that air samples collected outside the lead control area during paint removal operations are less than 30 micrograms per cubic meter of air; the respiratory protection used for the employees was adequate; the work procedures were performed in accordance with 29 CFR 1926.62; and that there were no visible accumulations of material and dust containing lead, lead based paint left in the work site. Do not remove the lead control area or roped off boundary and warning signs prior to the Contracting Officer's acknowledgement of receipt of the CP certification.

3.5.2 Disposal

Materials resulting from demolition work, except as specified otherwise, shall become the property of the Contractor and shall be disposed of in accordance with Section 02 41 00.00 33, "Demolition and Disposition" except as specified herein.

Lead hazardous waste and lead solid waste shall be sampled, segregated, stored, managed and disposed in accordance with the JEGS, DoD, and local laws and regulations. The contractor shall identify all activities which will generate hazardous waste as defined in the JEGS and COMFLEACT INST 5090.1.

Hazardous waste generated within the confines of Government facilities will be properly segregated, contained, labeled, handled, stored, and turned-in to Building 1822, the CFAY PWD Environmental Hazardous Waste Storage Area (HWSA). Prior to disposal, obtain an established Job Order Number (JON) from the Contracting Officer. Further information on hazardous waste disposal or JONs can be provided by the CFAY PWD Environmental Department at 243-5777.

Prior to collection or turn-in of LBP waste contact the CFAY PWD Environmental Department at 243-5777.

For LBP hazardous waste (lead concentration greater than 0.3 mg/L):

a. Perform a Toxicity Characteristic Leaching (TCLP) and provide results to the CO prior to disposal of LBP containing materials.

b. Segregate LBP hazardous wastes from LBP solid waste, other construction debris, materials and wastes.

c. Place LBP hazardous wastes in United Nation (UN) Performance Oriented Packaging(POP)approved containers or containers approved by the CFAY PWD Environmental Department.

d. Label LBP hazardous wastes containers in accordance with the JEGS and installation Hazardous Waste Management Plans.

e. Store hazardous waste containers in the area designated by the CO or the CO's representative.

f. Contact the Environmental Hazardous Waste Manager for pre-inspection and pick-up.

For LBP solid waste (lead concentration less than 0.3 mg/L)to include C&D debris shall adhere to the requirements of the JEGS, DoD and local regulations and laws. LBP solid wastes shall be disposed of at an approved off-site municipal solid waste landfill and shall comply with the testing and disposal requirements of the permitted facility. The contractor is responsible for all necessary permits, licenses, off-base approvals and other requirements for disposal to approved off-base disposal facilities. The contractor will provide the CO with a serially numbered manifest to ensure a complete audit trail from point of origin to ultimate disposal. For LBP solid waste:

a. Perform a Perform a Toxicity Characteristic Leaching (TCLP)and provide results to the CO prior to disposal of LBP containing materials.

b. Segregate LBP solid wastes from hazardous waste and recyclable materials. Segregate LBP metal waste from non-metal solid waste.

c. Place in approved construction dumpsters, rollouts, bins etc. at the CO designated area.

d. Dispose of in approved landfill.

e. Submit legible copies of the manifest (receipt "E") to the Contracting Officer upon completion of the disposal.

For LBP metal containing materials/waste the contractor will, at the discretion of and with prior approval from the Environmental Office / Qualified Recycling Program (QRP) Manager, DSN 243-3817, turn-in LBP containing metals to the QRP Yard. The contractor shall ensure metals are properly encapsulated to prevent personnel or environmental exposure to paint chips or dust particles.

If the contractor/subcontractor has a specific contract allowing for recycle of LBP containing metals at commercial recycling facilities, the contractor will submit a QRP - Tonnage Form to the PRY47 QRP Manager though the Contracting Officer.
When with prior approval of the Environmental Office, off-base disposal of Hazardous Waste is allowed, submit written evidence to demonstrate the hazardous waste treatment, storage, or disposal facility (TSD) is approved for lead disposal by the Government of Japan and/or local regulatory agencies. Submit completed hazardous waste manifests, signed and dated in

accordance with the JEGS. Contractor shall provide a certificate that the waste was accepted by the disposal facility.

3.5.2.1 Payment for Hazardous/LBP Waste

Payment for disposal of hazardous, non-hazardous waste and lead based paint will not be made until a signed copy of the manifest from the treatment or disposal facility certifying the amount of lead-containing materials or non-hazardous waste delivered is returned and a copy is furnished to the Government.

-- End of Section --

SECTION 02 83 19.00 33

LEAD BASED PAINT HAZARD ABATEMENT, TARGET HOUSING & CHILD OCCUPIED FACILITIES

PART 1 GENERAL

1.1 REFERENCES: The publications listed below form a part of this specification to the extent referenced. The publications are referred to within the text by the basic designation only. The latest version of the publication at time of award shall be used.

AMERICAN SOCIETY OF SANITARY ENGINEERING (ASSE)

ANSI Z9.2	Fundamentals Governing the Design and Operation of Local Exhaust Ventilation Systems

ASTM INTERNATIONAL (ASTM)

ASTM E1613	Determination of Lead by Inductively Coupled Plasma Atomic Emission Spectrometry (ICP-AES), Flame Atomic Absorption Spectrometry (FAAS), or Graphite Furnace Atomic Absorption Spectometry (GFAAS) Techniques
ASTM E1644	Hot Plate Digestion of Dust Wipe Samples for the Determination of Lead
ASTM E1726	Preparation of Soil Samples for Hotplate Digestion for Subsequent Lead Analysis
ASTM E1727	Field Collection of Soil Samples for Lead Determination by Atomic Spectrometry Techniques
ASTM E1728	Collection of Settled Dust Samples Using Wipe Sampling Methods for Subsequent Lead Determination
ASTM E1792	Wipe Sampling Methods for Lead in Surface Dust

NATIONAL FIRE PROTECTION ASSOCIATION (NFPA)

NFPA 701	Standard Methods of Fire Tests for Flame Propagation of Textiles and Films

DEPARTMENT OF HOUSING AND URBAN DEVELOPMENT (HUD)

HUD 6780	Guidelines for the Evaluation and Control of Lead-Based Paint Hazards in Housing

NATIONAL ARCHIVES AND RECORDS ADMINISTRATION (NARA)

40 CFR 745	Lead-Based Paint Poisoning Prevention in Certain Residential Structures

UNDERWRITERS LABORATORIES (UL)

UL 586	Standard for High-Efficiency Particulate, Air Filter Units

1.2 DEFINITIONS

1.2.1 Abatement

Measures defined in 40 CFR 745, Section 223, designed to permanently eliminate lead-based paint hazards.

1.2.2 Target Housing

Residential real property which is housing constructed prior to 1978, except housing for the elderly or persons with disabilities (unless any one or more children age 6 years or under resides or is expected to reside in such housing for the elderly or persons with disabilities) or any 0 bedroom dwelling.

1.2.3 Child-Occupied Facility

Real property which is a building or portion of a building constructed prior to 1978 visited regularly by the same child, 6 years of age or under, on at least two different days, provided that each day's visit lasts at least 6 hours, and the combined annual visits last at least 60 hours.
Child-occupied facilities include but are not limited to, day-care centers, preschools and kindergarten classrooms.

1.2.4 Lead-Based Paint Hazards

Paint-lead hazard, dust-lead hazard or soil-lead hazard as identified in 40 CFR 745, Section 65.

1.3 SYSTEM DESCRIPTION

The work covered by this section includes work tasks, on the Individual Work Task Data Element sheets at the end of this section, and the precautions specified in this section for the protection of building occupants and the environment during and after the performance of lead hazard abatement activities.

1.3.1 Protection of Existing Areas to Remain

All project work including, but not limited to, lead hazard abatement work, storage, transportation, and disposal shall be performed without damaging or contaminating adjacent work and areas. Where such work or areas are damaged or contaminated, the Contractor shall restore work and areas to the original condition.

1.3.2 Coordination with Other Work

The Contractor shall coordinate lead hazard abatement activities with work being performed in adjacent areas. Coordination procedures shall be explained in the Contractor's Accident Prevention Plan and shall describe how the Contractor will prevent lead exposure to other Contractors and/or Government personnel performing work unrelated to lead hazard abatement activities.

1.3.3 Sampling and Analysis

Submit a log of the analytical results from sampling conducted during the abatement. The log of results shall be kept current with project activities and shall be briefed to the Contracting Officer as analytical results are reported.

1.3.3.1 Dust Wipe Metals, Sampling and Analysis

Sampling shall conform to ASTM E1728 and ASTM E1792. Analysis shall conform to ASTM E1613 and ASTM E1644.

1.3.3.2 Soil Sampling and Analysis

Sampling shall conform to ASTM E1727. Analysis shall conform to ASTM E1613 and ASTM E1726.

1.3.3.3 Clearance Monitoring:

a. Take dust wipe samples inside the lead hazard control area after the final visual inspection in the quantities and at the locations specified.

(1) Floors.
(2) Interior Window sills.
(3) Window Troughs.

b. Take exterior bare soil samples inside the lead hazard control area after the final visual inspection in the quantities and at the locations specified.

(1) Near the building foundation.
(2) Nearby play areas.

1.3.4 Clearance Requirements

Target housing and child occupied facilities clearance levels.

(1) Floors: < 40 µg/Ft².
(2) Interior Window sills: < 250 µg/Ft².
(3) Window Troughs: < 400 µg/Ft².
(4) Bare soils in play areas accessible by children: < 400 mg/kg.
(5) Bare soils in all other areas: < 1200 mg/kg.

1.4 SUBMITTALS

Government approval is required for submittals with a "G" designation; submittals not having a "G" designation are for Contractor Quality Control approval. When used, a designation following the "G" designation identifies the office that will review the submittal for the Government. The following shall be submitted in accordance with Section 01 33 00.00 33 SUBMITTAL PROCEDURES:

SD-03 Product Data

Materials and Equipment; G (FEAD)

Expendable Supplies; G (FEAD)

Qualifications; G, (FEAD)

Occupant Protection Plan; G, (FEAD)

SD-06 Test Reports:

Pressure Differential Log; G (FEAD)

Licenses, Permits, and Notifications; G, (FEAD)

Sampling and Analysis; G, (FEAD)

Abatement Report; G, (FEAD)

1.5 QUALITY ASSURANCE

1.5.1 Qualifications and Organization Report

The Contractor shall furnish a qualification and organization report. The report shall describe the qualifications of the certified supervisor, certified risk assessor, and certified abatement workers. The report shall include an

organization chart showing the Contractor's personnel by name and title and project specific responsibilities and authorities. The report shall describe the qualifications of the laboratories selected for this project. The report shall be signed by the Contractor and the certified abatement supervisor to indicate that all personnel and laboratories comply with certification and experience requirements of this section and that project personnel have been given the authority to complete the tasks assigned to them.

1.5.2 Personnel and Subcontractor Responsibilities and Qualifications

1.5.2.1 Certified Abatement Supervisor

The abatement supervisor shall be certified pursuant to 40 CFR 745, Section 226 and is responsible for development and implementation of the occupant protection plan, the abatement report and shall supervise lead hazard abatement work activities.

1.5.2.2 Lead Hazard Abatement Workers

Lead hazard abatement workers shall be certified pursuant to 40 CFR 745, Section 226 and shall be responsible for performing the labor necessary to complete the lead hazard abatement activities required in this contract.

1.5.2.3 Certified Risk Assessor

The Certified Risk Assessor shall be certified pursuant to 40 CFR 745, Section 226 and shall be responsible to perform the clearance sampling, clearance sample data evaluation and shall summarize clearance sampling results in a section of the abatement report. The risk assessor shall sign the abatement report to indicate clearance requirements for the contract have been met.

1.5.2.4 Testing Laboratories

The laboratory selected to perform analysis on dust wipe, paint chip and soil samples shall be recognized by the EPA's National Lead Laboratory Accreditation Program (NLLAP).

1.5.3 Occupant Protection Plan

The certified supervisor shall develop and implement an Occupant Protection Plan describing the measures and management procedures to be taken during lead hazard abatement activities to protect the building occupants/building facilities and the outside environment from exposure to any lead contamination while lead hazard abatement activities are performed.

1.5.4 Licenses, Permits and Notifications

The Contractor shall certify in writing to the Contracting Officer at least 10 days prior to the commencement of work that licenses, permits and notifications have been obtained. The Contractor is responsible for all associated fees or costs incurred in obtaining the licenses, permits and notifications.

1.5.5 Training

Provide training to meet 40 CFR 745 Subpart L requirements by an EPA accredited training provider; provide proof in the Qualifications and Organization Report showing that personnel have passed certification examinations for their respective disciplines, that fees for certification have been paid to the EPA (or to the state for state-run programs) and that EPA has certified the supervisor, risk assessor, workers to perform their duties.

PART 2 PRODUCTS

2.1 MATERIALS AND EQUIPMENT

Materials and equipment needs to complete the project, shall be available and kept on the site. Submit a description of the materials and equipment required; including Material Safety Data Sheets (MSDS) for material brought onsite to perform the work.

2.1.1 Expendable supplies

Submit a description of the expendable supplies required.

2.1.1.1 Polyethylene Bags

Disposable bags shall be polyethylene plastic and shall be a minimum of 0.15 mm (6 mils) thick (0.1 mm (4 mils) thick if double bags are used) or any other thick plastic material shown to demonstrate at least equivalent performance; and shall be capable of being made leak-tight. Leak-tight means that solids, liquids or dust cannot escape or spill out.

2.1.1.2 Polyethylene Leak-tight Wrapping

Wrapping used to wrap lead contaminated debris shall be polyethylene plastic that is a minimum of 0.15 mm (6 mils) thick or any other thick plastic material shown to demonstrate at least equivalent performance.

2.1.1.3 Polyethylene Sheeting

Sheeting shall be polyethylene plastic with a minimum thickness of 0.15 mm (6 mils), or any other thick plastic material shown to demonstrate at least equivalent performance; and shall be provided in the largest sheet size reasonably accommodated by the project to minimize the number of seams. Where the project location constitutes an out of the ordinary potential for fire, or where unusual fire hazards cannot be eliminated, flame-resistant polyethylene sheets which conform to the requirements of NFPA 701 shall be provided.

2.1.1.4 Tape and Adhesive Spray

Tape and adhesive shall be capable of sealing joints between polyethylene sheets and for attachment of polyethylene sheets to adjacent surfaces. After dry application, tape or adhesive shall retain adhesion when exposed to wet conditions, including amended water. Tape shall be minimum 50 mm (2 inches) wide, industrial strength.

2.1.1.5 Containers

When used, containers shall be leak-tight and shall be labeled in accordance with JEGS, DOT and OSHA standards.

2.1.1.6 Chemical Paint Strippers

Chemical paint strippers shall not contain methylene chloride and shall be formulated to prevent stain, discoloration, or raising of the substrate materials.

2.1.1.7 Chemical Paint Stripper Neutralizer

Neutralizers for paint strippers shall be compatible with the substrate and suitable for use with the chemical stripper that has been applied to the surface.

2.1.1.8 Detergents and Cleaners

Detergents or cleaning agents shall not contain trisodium phosphate and shall have demonstrated effectiveness in lead control work using cleaning techniques specified by HUD 6780 guidelines.

2.2 EQIPMENT

2.2.1 Abrasive Removal Equipment

The use of powered machine for vibrating, sanding, grinding, or abrasive blasting is prohibited unless equipped with local exhaust ventilation systems equipped with high efficiency particulate air (HEPA) filters.

2.2.2 Negative Air Pressure System:

2.2.2.1 Minimum Requirements

Work shall not proceed in the area until containment is set up and HEPA filtration systems are in place. The negative air pressure system shall meet the requirements of ANSI Z9.2 including approved HEPA filters in accordance with UL 586. Negative air pressure equipment shall be equipped with new HEPA filters, and shall be sufficient to maintain a minimum pressure differential of minus 0.005 kPa 0.02 inch of water column relative to adjacent, unsealed areas. Negative air pressure system minimum requirements are listed below:

a. The unit shall be capable of delivering its rated volume of air with a clean first stage filter, an intermediate filter and a primary HEPA filter in place.

b. The HEPA filter shall be certified as being capable of trapping and retaining mono-dispersed particles as small as 0.3 micrometers at a minimum efficiency of 99.97 percent.

c. The unit shall be capable of continuing to deliver no less than 70 percent of rated capacity when the HEPA filter is 70 percent full or measures 0.625 kPa 2.5 inches of water static pressure differential on a magnehelic gauge.

d. The unit shall be equipped with a manometer-type negative pressure differential monitor with minor scale division of 0.005 kPa 0.02 inch of water and accuracy within plus or minus 1.0 percent. The manometer shall be calibrated daily as recommended by the manufacturer.

e. The unit shall be equipped with a means for the operator to easily interpret the readings in terms of the volumetric flow rate of air per minute moving through the machine at any given moment.

f. The unit shall be equipped with an electronic mechanism that automatically shuts the machine off in the event of a filter breach or absence of a filter.

g. The unit shall be equipped with an audible horn that sounds an alarm when the machine has shut itself off.

h. The unit shall be equipped with an automatic safety mechanism that prevents a worker from improperly inserting the main HEPA filter.

2.2.2.2 Auxiliary Generator

An auxiliary generator shall be provided with capacity to power a minimum of 50 percent of the negative air machines at any time during the work. When power fails, the generator controls shall automatically start the generator and switch the negative air pressure system machines to generator power. The generator shall not present a carbon monoxide hazard to workers.

2.2.3 Vacuum Systems

Vacuum systems shall be suitably sized for the project, and filters shall be capable of trapping and retaining all mono-disperse particles as small as 0.3 micrometers (mean aerodynamic diameter) at a minimum efficiency of 99.97 percent. Used filters that are being replaced shall be disposed in a proper manner.

2.2.4 Heat Blower Guns

Heat blower guns shall be flameless, electrical, paint-softener type with controls to limit temperature to 590 degrees C 1,100 degrees F. Heat blower shall be Double Insulated (DI) or grounded type with 120 volts ac, and shall be equipped with cone, fan, glass protector and spoon reflector nozzles.

PART 3 EXECUTION

3.1 WORK PROCEDURES

The Contractor shall perform work following practices and procedures in project work plans and the occupant protection plan.

3.1.1 Lead Hazard Control Areas, Equipment and Procedures

The Contractor shall set up lead hazard control areas and operate equipment within the lead hazard control area in a manner that will minimize migration of lead dust beyond the lead hazard control area boundaries.

3.1.2 Lead Hazard Control Areas

Access into lead hazard control areas by the general public shall be prohibited. Lead hazard control area preparation and restriction requirements follow:

a. Containment features for interior lead hazard control projects: Polyethylene sheeting sealed with spray adhesive and duct tape to designate the lead hazard control area. The floor in the lead hazard control area shall be covered with two layers of polyethylene sheeting.

b. Containment features for exterior lead hazard control projects: A roped-off boundary perimeter, using caution tape or a barrier installed from where the lead control work is performed.

3.1.3 Negative Air Pressure System Containment

a. The negative air pressure systems shall be operated to provide at least 10 air changes per hour inside the containment. The local exhaust unit equipment shall be operated continuously until the containment is removed. The negative air pressure system shall be smoke tested for leaks at the beginning of each shift. The certified supervisor is responsible to continuously monitor and keep a pressure differential log with an automatic manometric recording instrument. The Contracting Officer shall be notified immediately if the pressure differential falls below the prescribed minimum. The building ventilation system shall not be used as the local exhaust system. The local exhaust system shall terminate out of doors unless the Contracting Officer allows an alternate arrangement. All filters shall be new at the beginning of the project and shall be periodically changed as necessary to maintain specified pressure differential and shall be disposed of as lead contaminated waste.

b. Discontinuing Negative Air Pressure System. The negative air pressure system shall be operated continuously during abatement activities unless otherwise authorized by the Contracting Officer. At the completion of the project, units shall be run until full cleanup has been completed and final clearance testing requirements have been met. Dismantling of the negative air pressure systems shall [conform to written decontamination procedures] [be approved by the

Contracting Officer] [be as presented in the Lead Hazard Control Plan]. The HEPA filter machine intakes shall be sealed with polyethylene to prevent environmental contamination.

3.2 FURNISHINGS

The Contractor shall remove furniture and equipment from the work area before lead hazard control work begins.

3.3 LEAD-BASED PAINT ABATEMENT METHODS AND TECHNIQUES

Lead based paint abatement techniques for building components and landscape features are specified on the individual work task data element sheets at the end of this section.

3.4 CLEARANCE PROCEDURES:

3.4.1 Visual Inspection

The certified supervisor shall perform a visual inspection, using the form at the end of this section, to assure that lead hazard abatement activities, identified in the individual work task data elements, have been properly completed. The certified supervisor shall visually verify that lead hazards have been abated and the area is free of dust and paint chips generated by lead hazard abatement activities.

3.4.2 Analytical Demonstration of Clearance

After the visual inspection, the certified risk assessor shall take clearance samples for laboratory analysis to verify clearance requirements specified in paragraph CLEARANCE REQUIREMENTS have been met.

3.4.3 Clearance

The certified risk assessor shall review analytical results for the samples taken to determine compliance with project specific clearance requirements. The following actions apply and shall be performed at the Contractor's expense if project specific clearance levels are exceeded:

a. Reclean surfaces.
b. Retest to determine clearance.

3.5 ABATEMENT REPORT

Submit the report, written by the certified supervisor, covering each element in 40 CFR 745, Section 227 (e) (10). The following information shall be covered in the abatement report:

a. Start and completion dates of lead hazard control activities.

b. The name and address of each firm conducting lead hazard control activities and the name of each supervisor assigned to the project.

c. The Occupant Protection Plan prepared pursuant to paragraph OCCUPANT PROTECTION PLAN.

d. The name, address and signature of the certified risk assessor to indicating clearance requirements have been met.

e. Certification of each Final Cleaning and Visual Inspection performed by the certified supervisor.

f. The results of clearance testing and all soil analyses, and the name of each laboratory that conducted the analyses.

g. A detailed written description of the lead abatement including abatement methods used, locations of rooms and/or components where lead abatement activities occurred, reason for selecting particular abatement methods for each component, and any suggested monitoring of encapsulants or enclosures.

h. Hazardous waste disposal documentation.

i. Contractor provided installation/maintenance manuals.

3.6 CERTIFICATION OF VISUAL INSPECTION

The Contractor shall certify that the lead hazard control area(s) for each individual work task data elements have passed visual clearance criteria and are ready for clearance sampling. To pass visual clearance, lead hazards have to be removed; control technology appropriately applied/installed; the lead hazard control area must be free from visible dust debris, paint chips or any other residue that may have been generated by the lead hazard control activities.

Signature by the certified supervisor indicates that the described lead hazard control area(s) have passed visual clearance criteria. Provide detailed description of each Lead Hazard Control Area.

_____

_____

_____

BY:_____

Certified Supervisor Date

Print name and title _ __ _____

CONTRACTING OFFICER ACCEPTANCE OR REJECTION

The Contracting Officer hereby determines that the Contractor has performed visual inspection of the lead hazard control area and by quality assurance inspection, finds the Contractor's work to be:

_____ Acceptable, ready for performance of clearance sampling

_____ Unacceptable, Contractor instructed to re-clean the lead hazard control area

BY: Contracting Officer's Representative

_____

Signature Date

Print name and title_____

Lead Hazard Control Clearance Sampling Certification Form

Date_____

Name of Certified Risk
Assessor_____

License No._____

Work Task Data Element _____

Sample quantity and location:
Exterior Soils _____

Date of sample collection_____Date Shipped to lab_____

Shipped by_____
Signature

I certify that the clearance samples taken meet the clearance sampling requirements of this contract.

By:_____ Date:_____
Certified Risk Assessor

Print name and Title:_____

CONTRACTING OFFICER ACCEPTANCE OR REJECTION

I have inspected sampling locations and procedures and have found them to be

_____Acceptable, meet contract requirements.

_____Unacceptable, do not meet contract requirements, Contractor is

directed to resample.

By: Contracting Officer's Representative

Signature Date

Print Name and Title_____

INDIVIDUAL WORK TASK DATA ELEMENTS

Sheet _____ of _____

There is a separate data sheet for each individual work task.

WORK TASK DESIGNATION NUMBER: _____

1. LOCATION OF WORK TASK:

2. BRIEF DESCRIPTION OF THE ABATEMENT ACTIVITY:

-- End of Section --

DIVISION 07

SECTION 07 14 00.00 33

WATERPROOFING SYSTEM

PART 1 GENERAL

1.1 REFERENCES

The publications listed below form a part of this specification to the extent referenced. The publications are referred to within the text by the basic designation only.

JAPANESE ARCHITECTURAL STANDARD SPECIFICATION(JASS)

JASS 8 Waterproofing and Sealing

JAPANESE INDUSTRIAL STANDARDS (JIS)

JIS A 6021 Liquid-applied Compounds for Waterproofing Membrane Coating of Buildings

PUBLICATION OF MINISTRY OF LAND, INFRASTRUCTURE, AND TRANSPORT

Common Specifications of Construction Work
(“Koukyou Kenchiku Kouji hyoujun Shiyousho”)

1.2 SUBMITTALS

Government approval is required for submittals with a "G" designation; submittals not having a "G" designation are for Contractor Quality Control approval. Submit the following in accordance with Section 01 33 00.00 33 SUBMITTAL PROCEDURES:

SD-02 Shop Drawings

Installation details of Waterproofing; G (FEAD)

SD-03 Product Data

Waterproofing system; G (FEAD)

SD-11 Closeout Submittals

Warranty; G (FEAD)

1.3 DELIVERY, STORAGE, AND HANDLING

Deliver waterproofing materials in manufacturer's original, unopened containers, with labels intact and legible. Containers of materials covered by a referenced specification number shall bear the specification number, type, and class of the contents. Deliver materials in sufficient quantity to

continue work without interruption. Store and protect materials in accordance with manufacturer's instructions, and use within their indicated shelf life. When hazardous materials are involved, adhere to special precautions of the manufacturer, unless precautions conflict with local, state, and federal regulations. Promptly remove from the site materials or incomplete work adversely affected by exposure to moisture or freezing. Store materials on pallets and cover from top to bottom with canvas tarpaulins.

1.4 ENVIRONMENTAL CONDITIONS

Apply materials when ambient temperature is 4 degrees C (40 degrees F) or above for a period of 24 hours prior to the application and when there is no ice, frost, surface moisture, or visible dampness on the substrate surface. Apply materials when air temperature is expected to remain above 4 degrees C(40 degrees F) during the cure period recommended by the manufacturer. Moisture test for substrate is specified under paragraph entitled "Moisture Test." Work may be performed within heated enclosures, provided the surface temperature of the substrate is maintained at a minimum of 4 degrees C(40 degrees F) for 24 hours prior to the application of the waterproofing, and remains above that temperature during the cure period recommended by the manufacturer.

1.5 WARRANTY

Provide manufacturer's standard performance guarantees.

PART 2 PRODUCTS

2.1 WATERPROOFING SYSTEM

Urethane **Acrylic** rubber type waterproofing system, shall be made by one manufacturer. Top color shall be selected from the manufacturer’s sample by the Contracting Officer.

2.1.1 Primer

In accordance with the waterproofing system manufacturer.

2.1.2 Base Coat and Intermediate Coat

JIS A 6021, urethane acrylic.

2.1.3 Top Coat

JIS A 6021, urethane acrylic.

2.2 WORK PROCEDURE

In accordance with JASS 8, and each manufacturer's instruction.

-- End of Section --

SECTION 07 41 13.00 33

METAL ROOF PANELS

PART 1 GENERAL

1.1 REFERENCES

The publications listed below form a part of this specification to the extent referenced. The publications are referred to within the text by the basic designation only.

JAPANESE ARCHITECTURAL STANDARD SPECIFICATION(JASS)

JASS 12	Roof Covering
JASS 6	Steel Work

JAPANESE INDUSTRIAL STANDARDS (JIS)

JIS A 5701	Glass fiber Reinforced Plastic Corrugated Sheets
JIS G 3312	Prepainted Hot-dip Zinc-coated Steel Sheets and Coils
JIS G 3316	Shapes and Dimensions of Corrugated Steel Sheets

JAPANESE AGRICULTURAL STANDARDS (JAS) ASSOCIATION PUBLICATIONS

1.2 SUBMITTALS

Government approval is required for submittals with a "G" designation; submittals not having a "G" designation are for Contractor Quality Control approval. Submit the following in accordance with Section 01 33 00 SUBMITTAL PROCEDURES:

SD-02 Shop Drawings

Roof panel installation details; G (FEAD)

SD-03 Product Data

Roof panel; G (FEAD)

SD-11 Closeout Submittals

Warranties; G (FEAD)

1.3 QUALITY ASSURANCE

1.3.1 Field Verification

Prior to the preparation of drawings and fabrication, verify location of roof framing, roof openings and penetrations, and any other special conditions. Indicate all special conditions and measurements on final shop drawings.

1.3.2 Qualifications for Welding Work

Welding procedures must conform to JASS 6. Operators are permitted to make only those types of weldments for which each is specifically qualified.

1.4 DELIVERY, HANDLING, AND STORAGE

Deliver, store, and handle panel materials, bulk roofing products, accessories, and other manufactured items in a manner to prevent damage and deformation, as recommended by the manufacturer, and as specified.

1.4.1 Delivery

Package and deliver materials to the site in undamaged condition. Provide adequate packaging to protect materials during shipment. Do not uncrate materials until ready for use, except for inspection. Immediately upon arrival of materials at jobsite, inspect materials for damage, deformation, dampness, and staining. Remove affected materials from the siteand immediately replace. Remove moisture from wet materials not otherwise affected, restack and protect from further moisture exposure.

1.4.2 Handling

Handle materials in a manner to avoid damage. Select and operate material handling equipment so as not to damage materials or applied roofing.

1.4.3 Storage

Stack materials stored on site on platforms or pallets, and cover with tarpaulins or other weathertight covering which prevents trapping of water or condensation under the covering. Store roof panels so that water which may have accumulated during transit or storage will drain off. Do not store panels in contact with materials that might cause staining. Secure coverings and stored items to protect from wind displacement.

1.5 PROJECT CONDITIONS

Weather Limitations: Proceed with installation only when existing and forcast weather conditions permit meatl roof panel work to be performed according to manufacturer's written instructions and warranty requirements, and specified safety requirements.

1.6 FABRICATION

Fabricate and finish metal roof panels and accessories on a factory stationary industrial type rolling mill to the greatest extent possible, per manufacturer's standard procedures and processes, and as necessay to fulfill indicated performance requirements. Comply with indicated profiles, dimensional and structural requirements. Provide panel profile, as indicated on drawings for full length of panel. Fabricate panel side laps with factory installed captive gaskets or separator strips providing a weather tight seal and preventing metal-to metal contact, and minimizing noise from movements within the panel assembly.

1.6.1 Finishes

Finish quality and application processes must conform to the related standards specified within this section. Noticeable variations within the same piece are not acceptable. Variations in appearance of adjoining components are acceptable if they are within the range of approved samples and are assembled or installed to minimize any contrasting variations.

1.7 ACCESSORIES

Fabricate flashing and trim to comply with recommendations in JASS 12 as applicable to the design, dimensions, metal, and other characteristics of the item indicated.

a. Form exposed sheet metal accessories which are free from excessive oil canning, buckling, and tool marks, and are true to line and levels indicated, with exposed edges folded back to form hems.

b. End Seams: Fabricate nonmoving seams with flat-lock seams. Form seams and seal with epoxy seam sealer. Rivet joints for additional strength.

c. Sealed Joints: Form non-expansion, but movable joints in metal to accomodate elastomeric sealant to comply with JASS.

d. Conceal fasteners and expansion provisions where possible. Exposed fasteners are not allowed on faces of accessories exposed to view.

e. Fabricate cleats and attachments devices of size and metal thickness recommended by metal roof panel manufacturer for application, but not less than the thickness of the metal being secured.

1.8 WARRANTIES

Provide metal roof system material and workmanship warranties.

1.8.1 Metal Roof System Installer Warranty

Provide roof system installer warranty for a period of not less than two years that the roof system, as installed, is free from defects in installation workmanship, to include the roof panel installation, flashing, insulation, accessories, attachments, and sheet metal installation integral to a complete watertight roof system assembly. Issue warranty directly to the Government. Correction of defective workmanship and replacement of damaged or affected materials is the responsibility of the metal roof system installer. All costs associated with the repair or replacement work are the responsibility of the installer.

PART 2 PRODUCTS

2.1 METAL ROOF PANEL

Pre-coated and galvanized steel sheet(GSS) and Glass fiber Reinforced Plastic(FRP), Corrugated type roofing panel, including fastener, weather closure, flashing, and related items, as indicated on drawing. Length of panel sheet shall be sufficient to cover the entire length of roof slope.

2.1.1 GSS Panel

JIS G 3302,

2.1.1.1 Corrugation

JIS G 3316,

2.1.2 Fastener

Stainless steel(SUS 304) bolt and nut with washer and packing, in accordance with the metal roof panel manufacturer.

2.1.3 Hook Bolt

Stainless Steel(SUS 304) with washer and packing, in accordance with the panel manufacturer, and as indicated on drawing.

2.1.4 Weather Closure

Shall be closed-cell or solid-cell synthetic rubber, neoprene, or polyvinyl chloride pre-molded to match the configurations of the preformed metal panels in accordance with the roof panel manufacturer.

2.1.5 Flashing

Pre-coated GSS, JIS G 3312.

2.1.6 Corrugated FRP sheet Roofing and Siding

JIS A 5701 as indicated on drawing.

PART 3 EXECUTION

3.1 WORK PROCEDURE

In accordance with JASS 12, and each manufacturer’s installation instruction.

-- End of Section --

SECTION 07 42 13.00 33

METAL WALL PANELS

PART 1 GENERAL

1.1 REFERENCES

The publications listed below form a part of this specification to the extent referenced. The publications are referred to within the text by the basic designation only.

JAPANESE ARCHITECTURAL STANDARD SPECIFICATION(JASS)

JASS 6	Steel Work
JASS 27	Dry-method Exterior Wall Work

JAPANESE INDUSTRIAL STANDARDS (JIS)

JIS A 5701	Glass fiber Reinforced Plastic Corrugated Sheets
JIS G 3312	Prepainted Hot-dip Zinc-coated Steel Sheets and Coils

1.2 DEFINITIONS

Metal Wall Panel: Metal wall panels, attachment system components and accessories necessary for a complete weather-tight wall system.

1.3 SUBMITTALS

Government approval is required for submittals with a "G" designation; submittals not having a "G" designation are for Contractor Quality Control approval. Submit the following in accordance with Section 01 33 00.00 33 SUBMITTAL PROCEDURES:

SD-02 Shop Drawings

Wall panel installation details; G (FEAD)

SD-03 Product Data

Wall panel; G (FEAD)

SD-11 Closeout Submittals

Warranties; G (FEAD)

1.4 QUALITY ASSURANCE

1.4.1 Installation Drawings

Installation shop drawings for wall panels, flashing, accessories, and anchorage systems must indicate completely dimensioned structural frame and erection layouts, openings in the wall, special framing details, and construction details at corners, building intersections and flashing, location and type of mastic and metal filler strips.

1.4.2 Qualifications for Welding Work

Welding procedures must conform to JASS 6. Operators are permitted to make only those types of weldments for which each is specifically qualified.

1.5 DELIVERY, HANDLING, AND STORAGE

Deliver and protect package components, sheets, metal wall panels, and other manufactured items to prevent damage or deformation during transportation and handling. Unload, store, and erect metal wall panels in a manner to prevent bending, warping, twisting, and surface damage. Stack and store metal wall panels horizontally on platforms or pallets, covered with suitable weather-tight and ventilated covering to ensure dryness, with positive slope for drainage of water. Do not store metal wall panels in contact with other materials that might cause staining, denting, or other surface damage. Retain strippable protective covering on metal wall panel until actual installation.

1.6 PROJECT CONDITIONS

1.6.1 Field Measurements

Verify locations of wall framing and opening dimensions by field measurements before metal wall panel fabrication and indicate measurements on Shop Drawings.

1.6.2 Weather Limitations

Proceed with installation preparation only when existing and forecasted weather conditions permit Work to proceed without water entering into wall system or building.

1.7 WARRANTY

Provide wall system installer warranty for a period of not less than two years that the wall system, as installed, is free from defects in installation workmanship, to include the roof panel installation, flashing, insulation, accessories, attachments, and sheet metal installation integral to a complete watertight roof system assembly. Issue warranty directly to the Government. Correction of defective workmanship and replacement of damaged or affected materials is the responsibility of the metal wall system installer. All costs associated with the repair or replacement work are the responsibility of the installer.

PART 2 PRODUCTS

2.4 METAL WALL PANEL

Pre-coated and galvanized steel sheet(GSS)(JIS G 3312), ribbed type siding panel, including fastener, weather closure, flashing, and related items, as indicated on drawing.

2.4.1 Corrugation

JIS G 3316,

2.4.2 Fastener

Stainless steel(SUS 304) tapping screw with washer and packing, in accordance with the siding panel manufacturer.

2.4.3 Weather Closure

Shall be closed-cell or solid-cell synthetic rubber, neoprene, or polyvinyl chloride pre-molded to match the configurations of the preformed metal panels in accordance with the siding panel manufacturer.

2.4.4 Flashing

Pre-coated GSS, JIS G 3312, as indicated on drawing.

Corrugated FRP sheet Roofing and Siding: JIS A 5701, indicated on drawing.

PART 3 EXECUTION

3.4 WORK PROCEDURE

In accordance with the manufacturer's approved installation instructions.

3.5 WORK PROCEDURE

In accordance with JASS 27, and each manufacturer’s installation instruction.

-- End of Section --

SECTION 07 60 00.00 33

GUTTER AND DOWNSPOUT

PART 1 GENERAL

1.1 REFERENCES

The publications listed below form a part of this specification to the extent referenced. The publications are referred to in the text by the basic designation only.

JAPANESE ARCHITECTURAL STANDARD SPECIFICATION

JASS 12	Roof Covering

JAPANESE INDUSTRIAL STANDARDS (JIS)

JIS K 6741	Unplasticized Polyvinyl Chloride (PVC) Pipes
JIS K 9798	Unplasticized Poly(vinyl chloride)(PVC-U) Three Layer Pipes with Recycled Foamed Core
JIS G 4305	Cold Rolled Stainless Steel Plates, Sheets and Strip
JIS A 5522	Roof Drains
JIS G 3302	Hot-dip Zinc-coated Steel Sheets and Coils
JIS G 3312	Prepainted Hot-dip Zinc-coated Steel Sheets and Coils
JIS Z 2371	Methods of Salt Spray Testing
JIS H 4100	Aluminum and Aluminum Alloy Extruded Shapes
JIS G 3555	Woven Wire Cloth

1.2 SUBMITTALS

Government approval is required for submittals with a "G" designation; submittals not having a "G" designation are for Contractor Quality Control approval. Submit the following in accordance with Section 01 33 00.00 33 SUBMITTAL PROCEDURES:

SD-02 Shop Drawings

Installation details of Gutter and Downspout; G (FEAD)

SD-03 Product Data

Product’s name to be submitted; G (FEAD)

1.3 DELIVERY, HANDLING, AND STORAGE

Package and protect materials during shipment. Uncrate and inspect materials for damage, dampness, and wet-storage stains upon delivery to the job site. Remove from the site and replace damaged materials that cannot be restored to like-new condition. Handle sheet metal items to avoid damage to surfaces, edges, and ends. Store materials in dry, weather-tight, ventilated areas until immediately before installation.

PART 2 PRODUCTS

2.1 MATERIALS

2.1.1 Flashing

Pre-coated galvanized steel sheet(GSS, JIS G 3312).
Aluminum(JIS H 4100).

2.1.2 Coping

Pre-coated aluminum(JIS H 4100) with expansion bolt.

2.1.3 Gutter

Polyvinyl chloride(PVC) type gutter.

Valley Gutter

Galvanized steel(GS)(JIS G 3302, Type SGCC) with acid resistant modified acrylic resin finish(ARMA).

Pre-coated type acid-proof covering steel sheet(APSS) gutter, as indicated on drawing. Pre-coated APSS gutter shall have the following anti-corrosive characteristics:

Item:	Requirement:	Testing Method:
Salt-water	No rust	JIS Z 2371, spray testing (5% salt-water, 60 cycle)

2.1.3.1 Hanger Strap

Galvanized steel, JIS G 3302.

Stainless steel(SUS 304).

2.1.4 Downspout

JIS K 6741, Type VP.

JIS K 6741, Type VP, with leader head with stainless steel net(JIS G 3555, Type PW-S, SUS 304).

JIS K 9798, Type RS-VP, with stainless steel(SUS 304) support.

2.1.4.1 Leader Strap

Galvanized steel, JIS G 3302.

Stainless steel(SUS 304).

2.1.5 Concrete Splash Block

Pre-cast concrete type.

2.1.6 Roof Drain

JIS A 5522, cast iron.

2.1.6.1 Roof Drain Cap

Pre-coated die-cast.

PART 3 EXECUTION

3.1 WORK PROCEDURE

In accordance with JASS 12, and each manufacturer’s instruction.

-- End of Section --

SECTION 07 92 00.00 33

SEALANT

PART 1 GENERAL

1.1 REFERENCES

The publications listed below form a part of this specification to the extent referenced. The publications are referred to within the text by the basic designation only.

JAPANESE ARCHITECTURAL STANDARD SPECIFICATION(JASS)

JASS 8 Waterproofing and Sealing

JAPANESE INDUSTRIAL STANDARDS (JIS)

JIS A 5758 Sealants for Sealing and Glazing in Buildings

1.2 SUBMITTALS

Government approval is required for submittals with a "G" designation; submittals not having a "G" designation are for Contractor Quality Control approval. Submit the following in accordance with Section 01 33 00.00 33 SUBMITTAL PROCEDURES:

SD-03 Product Data

Product’s name to be submitted; G (FEAD)

1.3 ENVIRONMENTAL CONDITIONS

Apply sealant when the ambient temperature is between 4 and 32 degrees C (40 and 90 degrees F).

1.4 DELIVERY AND STORAGE

Deliver materials to the job site in unopened manufacturers' external shipping containers, with brand names, date of manufacture, color, and material designation clearly marked thereon. Lable elastomeric sealant containers to identify type, class, grade, and use. Carefully handle and store materials to prevent inclusion of foreign materials or subjection to sustained temperatures exceeding 32 degrees C (90 degrees F) or less than 4 degrees C (0 degrees F).

1.5 QUALITY ASSURANCE

1.5.1 Compatibility with Substrate

Verify that each of the sealants are compatible for use with joint substrates.

1.5.2 Joint Tolerance

Provide joint tolerances in accordance with manufacturer's printed instructions.

1.5.3 Mock-Up

Project personnel is responsible for installing sealants in mock-up or prepared by other trades, using materials and techniques approved for use on the project.

1.6 SPECIAL WARRANTY

Guarantee sealant joint against failure of sealant and against water penetration through each sealed joint for five years.

PART 2 PRODUCTS

2.1 SEALANTS

Provide sealant that has been tested and found suitable for the substrates to which it will be applied.

2.1.1 Sealant

JIS A 5758, Type F, polyurethane(PU), denaturation silicon(MS), polysulfide(PS), acrylic urethane(UA)type.

2.1.2 Primers

Provide a nonstaining, quick-drying type and consistency recommended by the sealant manufacturer for the particular application.

2.1.3 Bond Breakers

Provide the type and consistency recommended by the sealant manufacturer to prevent adhesion of the sealant to backing or to bottom of the joint.

2.1.4 Backstops

Provide glass fiber roving or neoprene, butyl, polyurethane, or polyethylene foams free from oil or other staining elements as recommended by sealant manufacturer. Provide 25 to 33 percent oversized backing for closed cell and 40 to 50 percent oversized backing for open cell material, unless otherwise indicated. Make backstop material compatible with sealant. Do not use oakum and other types of absorptive materials as backstops.

2.1.5 Cleaning Solvents

Provide type(s) recommended by the sealant manufacturer.

PART 3 EXECUTION

3.1 WORK PROCEDURE

In accordance with JASS 8, and each manufacturer’s installation instruction.

-- End of Section --

DIVISION 08

SECTION 08 81 00.00 33

GLAZING

PART 1 GENERAL

1.1 REFERENCES

The publications listed below form a part of this specification to the extent referenced. The publications are referred to within the text by the basic designation only.

JAPANESE ARCHITECTURAL STANDARD SPECIFICATION(JASS)

JASS 17	Glazing Work

JAPANESE INDUSTRIAL STANDARDS (JIS)

JIS R 3202	Float Glass and Polished Plate Glass
JIS R 3203	Patterned Glass
JIS R 3204	Wired Glass
JIS A 4706	Windows

1.2 SUBMITTALS

Government approval is required for submittals with a "G" designation; submittals not having a "G" designation are for Contractor Quality Control approval. Submit the following in accordance with Section 01 33 00.00 33 SUBMITTAL PROCEDURES:

SD-02 Shop Drawings

Installation details of Glass pane in door or window; G (FEAD)

SD-03 Product Data

Product’s name to be submitted; G (FEAD)

1.3 SYSTEM DESCRIPTION

Glazing systems shall be fabricated and installed watertight and airtight to withstand thermal movement and wind loading without glass breakage, gasket failure, deterioration of glazing accessories, and defects in the work.

1.4 DELIVERY, STORAGE, AND HANDLING

Deliver products to the site in unopened containers, labeled plainly with manufacturers' names and brands. Store glass and setting materials in safe, enclosed dry locations and do not unpack until needed for installation. Handle and install materials in a manner that will protect them from damage.

1.5 ENVIRONMENTAL REQUIREMENTS

Do not start glazing work until the outdoor temperature is above 4 degrees C (40 degrees F) and rising, unless procedures recommended by the glass manufacturer and approved by the Contracting Officer are made to warm the glass and rabbet surfaces. Provide ventilation to prevent condensation of moisture on glazing work during installation. Do not perform glazing work during damp or rainy weather.

PART 2 PRODUCTS

2.1 GLASS

2.1.1 Clear Glass

JIS R 3202.

2.1.2 Patterned Glass

JIS R 3203.

2.1.3 Wired Glass

JIS R 3204.

2.2 SETTING AND SEALING MATERIALS

Provide as specified in the manufacturer's recommendations, unless specified otherwise herein. Do not use metal sash putty, nonskinning compounds, nonresilient preformed sealers, or impregnated preformed gaskets. Materials exposed to view and unpainted shall be gray or neutral color.

2.2.1 Putty and Glazing Compound

Putty shall be linseed oil type for face-glazing primed wood sash. Putty and glazing compounds shall not be used with insulating glass or laminated glass.

2.2.2 Sealants

As specified in Section 07 92 00.00 33, “Sealant”.

Provide elastomeric or structural sealants.

2.2.3 Joint Backer

Joint backer shall have a diameter size at least 25 percent larger than joint width; type and material as recommended in writing by glass and sealant manufacturer.

2.2.4 Preformed Channels

Neoprene, vinyl, or rubber, as recommended by the glass manufacturer for the particular condition.

2.2.5 Sealing Tapes

Preformed, semisolid, PVC-based material of proper size and compressibility for the particular condition. Use only where glazing rabbet is designed for tape and tape is recommended by the glass or sealant manufacturer. Provide spacer shims for use with compressible tapes. Tapes shall be chemically compatible with the product being set.

2.2.6 Setting Blocks and Edge Blocks

Closed-cell neoprene setting blocks shall be dense extruded type. Edge blocking shall be Shore A durometer of 50 (+ or - 5). Silicone setting blocks shall be required when blocks are in contact with silicone sealant. Profiles, lengths and locations shall be as required and recommended in writing by glass manufacturer. Block color shall be black.

2.2.7 Glazing Gaskets

Glazing gaskets shall be extruded with continuous integral locking projection designed to engage into metal glass holding members to provide a watertight seal during dynamic loading, building movements and thermal movements. Glazing gaskets for a single glazed opening shall be continuous one-piece units with factory-fabricated injection-molded corners free of flashing and burrs. Glazing gaskets shall be in lengths or units recommended by manufacturer to ensure against pull-back at corners.

2.2.8 Accessories

Provide as required for a complete installation, including glazing points, clips, shims, angles, beads, and spacer strips. Provide noncorroding metal accessories. Provide primer-sealers and cleaners as recommended by the glass and sealant manufacturers.

PART 3 EXECUTION

3.1 WORK PROCEDURE

In accordance with JASS 17, and each manufacturer’s installation instruction.

-- End of Section --

DIVISION 09

SECTION 09 24 23.00 33

CEMENT MORTAR AND CRACK REPAIR

PART 1 GENERAL

1.1 REFERENCES

The publications listed below form a part of this specification to the extent referenced. The publications are referred to within the text by the basic designation only.

JAPANESE ARCHITECTURAL STANDARD SPECIFICATION(JASS)

JASS 15	Plastering Work

JAPANESE INDUSTRIAL STANDARDS (JIS)

JIS R 5210	Portland Cement
JIS A 5504	Wire Laths
JIS A 5505	Metal Lath
JIS A 5524	Lath Sheets
JIS G 3112	Deformed Bar

1.2 SUBMITTALS

Government approval is required for submittals with a "G" designation; submittals not having a "G" designation are for Contractor Quality Control approval. The following shall be submitted in accordance with Section 01 33 00.00 33 SUBMITTAL PROCEDURES:

SD-02 Shop Drawings

Installation details of repair spalling and crack; G (FEAD)

SD-03 Product Data

Product’s name to be submitted; G (FEAD)

1.3 DELIVERY AND STORAGE

Packaged materials shall be delivered to the site in the original packages and containers with labels intact and seals unbroken. Cementitious materials shall be kept dry and stored off the ground under cover away from damp surfaces until ready to be used. Aggregate shall be covered to prevent the absorption or loss of moisture.

1.4 ENVIRONMENTAL CONDITIONS

Stucco shall not be applied when the ambient temperature is 40 degrees F or lower, or when a drop in temperature below 40 degrees F is expected within 48 hours after application.

PART 2 PRODUCTS

2.1 MATERIALS

2.1.1 Cement Mortar

Consist of Portland cement(JIS R 5210, normal), aggregate, water, and admixture, in accordance with JASS 15.

2.1.2 Waterproof Cement Mortar

Shall be mixed with Portland cement(JIS R 5210, normal), water, and waterproof agent, so proportioned in accordance with the waterproof cement mortar manufacturer's instruction.

2.1.3 Leveling Cement Mortar

Shall be mixed with Portland cement(JIS R 5210, normal), water, and leveling agent, so proportioned in accordance with the leveling cement mortar manufacturer's instruction.

2.1.4 Non-shrink Cement Mortar

Shall be mixed with Portland cement(JIS R 5210, normal), water, and non-shrink agent, so proportioned in accordance with the non-shrink cement mortar manufacturer's instruction.

2.1.5 Polymer Cement Mortar

Shall be mixed with Portland cement(JIS R 5210, normal), water, and polymer cement agent, so proportioned in accordance with the polymer cement mortar manufacturer's instruction.

2.1.6 Resin Mortar

Component of epoxy resin and artificial aggregate, shall have the following characteristics;

Items	Rate
Specific Gravity	2.0 ± 0.1
Compressive Strength	> 50 N/mm^2
Bending Strength	> 25 N/mm^2
Compressive Elasticity Modulus	> (4~8)x 10^3 N/mm^2

2.1.7 Adhesive

In accordance with the each cement mortar manufacturer.

2.1.8 Reinforcement

2.1.8.1 Lath Sheet

JIS A 5524

2.1.8.2 Metal Lath

JIS A 5505

2.1.8.3 Wire Lath

JIS A 5504

2.1.8.4 Deformed bar

JIS G 3112

2.1.9 Water

Water shall be clean, fresh, potable, and free from amounts of oils, acids, alkalis and organic matter that would be injurious to the mortar.

2.1.10 Injection

Epoxy resin type injection, shall have the following characteristics;

Item	Testing Method	Testing Condition	Rate
Viscosity	JIS K 6833	20°C	10000±4000 mPa·s
Specific Gravity	JIS K 7112	20°C, 7-days	1.15±0.05
Tensile Strength	JIS K 7113	20°C, 7-days	not less than 20.0 N/mm²
Tensile Shearing Strength	JIS K 6850	20°C, 7-days	not less than 10.0 N/mm²

PART 3 EXECUTION

3.1 MORTAR WORKS

In accordance with JASS 15, and each manufacturer’s instruction.

3.2 CRACK REPAIR

3.2.1 U-cut Method

3.2.1.1 Preparation of Surface

Cut the concrete surface of crack in U-shape groove. The inner surface of U-shape groove shall be clean, dry to the touch, and free from moisture, grease, oil, or other foreign matter that would tend to destroy or impair adhesion.

3.2.1.2 Application of Sealant

Apply sealant as specified in Section 07 92 00.00 33, “Sealant”. Force the compound into innermost part of the U-shape groove with sufficient pressure. Compound shall be uniformly smooth and free of wrinkles.

3.2.1.3 Application of Acrylic Cement Mortar

In accordance with the acrylic cement mortar manufacturer's instruction.

3.3 SPALLING REPAIR

3.3.1 Preparation of Surfaces

Cut the concrete surface of spalling. The inner surface shall be clean, dry to the touch, and free from moisture, grease, oil, or other foreign matter that would tend to destroy or impair adhesion.

3.3.2 Repair of Reinforcing Steel Bar

Remove rust on existing reinforcing bar by wire brush. Where existing reinforcing bar is deteriorated, remove the deteriorated bar and provide new reinforcing bar by welding in accordance with JASS 6. Apply polymer cement paste on reinforcing steel bar in accordance with the polymer cement paste manufacturer.

3.3.3 Application of Cement Mortar

In accordance with JASS 15 and the each manufacturer's instruction.

3.3.4 Application of Sealer, and Polymer Cement Mortar

In accordance with the each manufacturer's instruction.

-- End of Section --

SECTION 09 90 00.00 33

PAINTS AND COATINGS

PART 1 GENERAL

1.1 REFERENCES

The publications listed below form a part of this specification to the extent referenced. The publications are referred to within the text by the basic designation only.

JAPANESE ARCHITECTURAL STANDARD SPECIFICATION(JASS)

JASS 18	Paint Work
JASS 23	Spray Finishing Work
JASS 8	Waterproofing and Sealing

JAPANESE INDUSTRIAL STANDARDS (JIS)

JIS A 6021	Liquid-applied Compounds for Waterproofing Membrane Coating of Buildings
JIS A 6909	Coating Materials for Textured Finishes of Buildings
JIS K 5492	Aluminum Paint
JIS K 5516	Ready Mixed Paint (Synthetic Resin Type)
JIS K 5531	Nitrocellulose Lacquer
JIS K 5551	Heavy-duty Anticorrosive Paints for Metal Structures
JIS K 5660	Synthetic Resin Emulsion Paints, Glossy Type
JIS K 5663	Synthetic Resin Emulsion Paints
JIS K 5670	Non Aqueous Dispersion Acrylic Paint
JIS K 5674	Lead-free, Chromium-free Anticorrosive Paint
JIS K 5621	Anticorrosive Paint for General Use
JIS K 5674	Lead-free, Chromium-free Anticorrosive Paint
JIS K 5492	Aluminum Paint

STEEL STRUCTURES PAINTING COUNCIL (SSPC) SPECIFICATIONS

SSPC-SP 1-82	Solvent Cleaning
SSPC-SP 2-89	Hand Tool Cleaning
SSPC-SP 3-89	Power Tool Cleaning
SSPC VIS 3	Visual Standard for Power-and Hand-Tool Cleaned Steel
SSPC PA Guide 3	A Guide to Safety in Paint Application

JAPAN PAINT MANUFACTURER’S ASSOCIATION (JPMA) PUBLICATION

2013 (G)	Paint Color Samples

CODE OF FEDERAL REGULATIONS (CFR)

29 CFR 1910.1000	Air Contaminants

ASME INTERNATIONAL (ASME)

ASME A13.1 (2007) Scheme for the Identification of Piping Systems

U.S. GENERAL SERVICES ADMINISTRATION (GSA)

FED-STD-595 (Rev B; Am 1) Colors Used in Government Procurement

MILITARY SPECIFICATIONS (MIL. SPEC.)

1.2 SUBMITTALS

Government approval is required for submittals with a "G" designation; submittals not having a "G" designation are for Contractor Quality Control approval. The following shall be submitted in accordance with Section 01 33 00 SUBMITTAL PROCEDURES:

SD-03 Product Data

Paint materials; G (FEAD)

SD-07 Certificates

Applicator's qualifications;

SD-08 Manufacturer's Instructions

Manufacturer's material safety data sheets (MSDS);

1.3 APPLICATOR'S QUALIFICATIONS

1.3.1 Contractor Qualification

Submit the name, address, telephone number, FAX number, and e-mail address of the contractor that will be performing all surface preparation and coating application. Submit evidence that key personnel have successfully performed surface preparation and application of coatings on a minimum of three similar projects within the past three years. List information by individual and include the following:

a. Name of individual and proposed position for this work.

b. Information about each previous assignment including:

Position or responsibility
Employer (if other than the Contractor)
Name of facility owner
Mailing address, telephone number, and telex number of facility owner
Name of individual in facility owner's organization who can be contacted as a reference
Location, size and description of structure
Dates work was carried out
Description of work carried out on structure

1.4 QUALITY ASSURANCE

1.4.1 Field Samples and Tests

The Government will take one(1)-pint samples of paint at random from the products delivered to the job site and test them to verify that the products either conform to the referenced specifications or the approved substitution. Products which do not conform shall be removed from the job site and replaced with new products that conform to the referenced specification or the approved substitution.

1.5 REGULATORY REQUIREMENTS

1.5.1 Environmental Protection

In addition to requirements specified elsewhere for environmental protection, provide coating materials that conform to the restrictions of the local Air Pollution Control District and regional jurisdiction. Notify Contracting Officer of any paint specified herein which fails to conform.

1.5.2 Lead Content

Do not use coatings having a lead content over 0.06 percent by weight of nonvolatile content.

1.5.3 Chromate Content

Do not use coatings containing zinc-chromate or strontium-chromate.

1.5.4 Asbestos Content

Materials shall not contain asbestos.

1.5.5 Mercury Content

Materials shall not contain mercury or mercury compounds.

1.5.6 Silica

Abrasive blast media shall not contain free crystalline silica.

1.6 PACKAGING, LABELING, AND STORAGE

Paints shall be in sealed containers that legibly show the contract specification number, designation name, formula or specification number, batch number, color, quantity, date of manufacture, manufacturer's formulation number, manufacturer's directions including any warnings and special precautions, and name and address of manufacturer. Pigmented paints shall be furnished in containers not larger than 20 liters (5 gallons). Paints and thinners shall be stored in accordance with the manufacturer's written directions, and as a minimum, stored off the ground, under cover, with sufficient ventilation to prevent the buildup of flammable vapors, and at temperatures between 4 to 35 degrees C (40 to 95 degrees F). Do not store paint, polyurethane, varnish, or wood stain products with materials that have a high capacity to adsorb VOC emissions. Do not store paint, polyurethane, varnish, or wood stain products in occupied spaces.

1.7 SAFETY AND HEALTH

Apply coating materials using safety methods and equipment in accordance with the following:

1.7.1 Safety Methods

Used during Coating Application Comply with the requirements of SSPC PA Guide 3.

1.7.2 Toxic Materials

To protect personnel from overexposure to toxic materials, conform to the most stringent guidance of:

a. The applicable manufacturer's Material Safety Data Sheets (MSDS) or local regulation.

b. 29 CFR 1910.1000.

c. The Japanese Industrial Safety and Health Act.

d. Japanese Regulation of Ordinance on Prevention of Organic Solvent Poisoning

1.8 ENVIRONMENTAL CONDITIONS

Comply, at minimum, with manufacturer recommendations for space ventilation during and after installation.

1.8.1 Coatings

Do not apply coating when air or substrate conditions are:

a. Less than 3 degrees C (37.4 degrees F) above dew point;

b. Below 10 degrees C (50 degrees F) or over 35 degrees C (95 degrees F), unless specifically pre-approved by the Contracting Officer and the product manufacturer. Under no circumstances shall application conditions exceed manufacturer recommendations.

1.9 SCHEDULING

Allow paint, polyurethane, varnish, and wood stain installations to cure prior to the installation of materials that adsorb VOCs.

1.10 COLOR AND TEXTURE SELECTION

Color and texture of finish coats shall be as indicated or specified. Where not indicated or specified, colors, type of paint (such as gloss, semi-gloss, etc.), and texture shall be selected by the Contracting Officer from samples of JPMA.

1.11 LOCATION AND SURFACE TYPE TO BE PAINTED

1.11.1 Painting Included

Where a space or surface is indicated to be painted, include the following unless indicated otherwise.

a. Surfaces behind portable objects and surface mounted articles readily detachable by removal of fasteners, such as screws and bolts.

b. New factory finished surfaces that require identification or color coding and factory finished surfaces that are damaged during performance of the work.

c. Existing coated surfaces that are damaged during performance of the work.

1.11.2 Painting Excluded

Do not paint the following unless indicated otherwise.

a. Surfaces concealed and made inaccessible by panelboards, fixed ductwork, machinery, and equipment fixed in place.

b. Surfaces in concealed spaces. Concealed spaces are defined as enclosed spaces above suspended ceilings, furred spaces, attic spaces, crawl spaces, elevator shafts and chases.

c. Steel to be embedded in concrete.

d. Copper, stainless steel, aluminum, brass, and lead except existing coated surfaces.

e. Hardware, fittings, and other factory finished items.

1.12 TOUCH-UP PAINT

Touch up damaged coatings on existing steel surface after gas-cut torch and welding.

PART 2 PRODUCTS

2.1 MATERIALS

2.1.1 Steel, Galvanized Steel(GS), Cast Iron Surface, except Electrical Conduit Pipe

Primer: Anti-corrosive paint, in accordance with the top coat manufacturer.
Top Coat: Ready mixed paint, synthetic resin type, JIS K 5516, Type 1.

Anti-corrosive primer: Modified epoxy resin primer, JASS 18, M-109.
Anti-corrosive primer: Modified epoxy resin primer, JIS K 5551.

2.1.2 Electrical Conduit Pipe Surface

Etching primer: JASS 18, M-109.
Anti-corrosive Paint: JIS K 5621, Type 1 for interior and JIS K 5674 for exterior.
Top Coat: Ready mixed paint, synthetic resin type, JIS K 5516, Type 1.

2.1.3 Wood and Plywood Surface

Sealer: In accordance with the top coat manufacturer.
Top Coat: Ready mixed paint, synthetic resin type, JIS K 5516, Type 1.

Acrylic type clear lacquer, non-gloss type, JASS 18, M-303.

2.1.4 Decorated(D-) Wood Molding and Wood Door Surface

Coloring: Oil stain
Top Coat: Clear lacquer, JIS K 5531.

2.1.5 Exterior Concrete Wall Surface and Cement Board Surface

Sealer: In accordance with the top coat manufacturer.
Top Coat: Synthetic resin emulsion paint, JIS K 5663, Type 1.

2.1.6 Exterior Concrete Wall Surface

Multi-layer coating system, JIS A 6909, type-E, consist of sealer, base boat, pattering coat, and top coat. Color and texture shall be as same as existing coating.

2.1.7 Exterior Concrete and Cement Mortar Surface

Apply rubber type coating system, shall consist of primer and top coat, JIS A 6909, type-E, water-type acrylic emulsion resin paint.

2.1.8 Polyvinyl Chloride(PVC) Surface

Primer: In accordance with the top coat manufacturer.
Top coat: top coat of JIS A 6909, multi-layer coating system, durability type(“Taikou sei”)-2.

2.1.9 Waterproof Urethane Type Floor Coating

Urethane membrane waterproof coating system, shall consist of follows;

Primer: In accordance with the coating system manufacturer.
Base and Intermediate Coat: Urethane membrane waterproofing, JIS A 6021, Type-1.
Top Coat: Urethane membrane waterproofing, JIS A 6021, Type-1, sliver color.

2.1.10 Concrete Foundation

Primer: In accordance with the top coat manufacturer.
Top Coat: Urethane rubber type, JIS A 6021, Type-1.

PART 3 EXECUTION

3.1 PROTECTION OF AREAS AND SPACES NOT TO BE PAINTED

Prior to surface preparation and coating applications, remove, mask, or otherwise protect, hardware, hardware accessories, machined surfaces,

radiator covers, plates, lighting fixtures, public and private property, and other such items not to be coated that are in contact with surfaces to be coated. Following completion of painting, workmen skilled in the trades involved shall reinstall removed items. Restore surfaces contaminated by coating materials, to original condition and repair damaged items.

3.2 SURFACE PREPARATION

Remove dirt, splinters, loose particles, grease, oil, disintegrated coatings, and other foreign matter and substances deleterious to coating performance as specified for each substrate before application of paint or surface treatments. Oil and grease shall be removed prior to mechanical cleaning. Cleaning shall be programmed so that dust and other contaminants will not fall on wet, newly painted surfaces. Exposed ferrous metals such as nail heads on or in contact with surfaces to be painted with water-thinned paints, shall be spot-primed with a suitable corrosion-inhibitive primer capable of preventing flash rusting and compatible with the coating specified for the adjacent areas.

Existing paint on steel and GSS surface contains lead-based paint(LBP). Handling of LBP which is encountered during surface preparation shall conform to Section 02 83 13.00 33, “LEAD IN CONSTRUCTION” and 02 83 19.00 33, “LEAD BASED PAINT HZARD ABATMENT, TARGET HOUSING & CHILD OCCUPIED FACILITIES”.

3.2.1 Steel and GSS Surface, except Electrical Conduit Pipe

Remove existing loose and deteriorated paint with hand tool in accordance with SSPC SP 2 and solvent clean in accordance with SSPC SP 1 to remove oil and grease.

Solvent clean in accordance with SSPC SP 1 to remove oil and grease.

Existing paint is lead-based paint(LBP). Perform surface preparation using with power tool with HEPA filtered vacuum equipment in accordance with SSPC SP 3, and solvent clean in accordance with SSPC SP 1 to remove oil and grease. As a visual reference, cleaned surfaces shall be similar to photographs in SSPC VIS 3. Handling of LBP which is encountered during surface preparation shall conform to Section 02 83 13.00 33, “LEAD IN CONSTRUCTION” and 02 83 19.00 33, “LEAD BASED PAINT HAZARD ABATMENT, TARGET HOUSING & CHILD OCCUPIED FACILITIES”.

3.2.2 Electrical Conduit Pipe Surface

Remove rust, dirt, loose and deteriorated debris with hand tool in accordance with SSPC SP 2, solvent clean in accordance with SSPC-SP 1 to remove oil and grease, and apply etching primer, JASS 18, M-109, in accordance with JASS 18.

3.2.3 Wood and Plywood Surface

Remove dust and other deleterious substances using with brush, lightly sand to roughen the entire area using with sand paper, and perform cosmetic repair of minor defects, in accordance with JASS 18.

3.2.4 Gypsum Board, Fire-resistant Gypsum Board, Waterproof Gypsum Board, and Cement Board Surface

Clean surface and repair minor defects in accordance with JASS 18 and JASS 23.

3.2.5 PVC Surface

Solvent clean, and lightly sand to roughen using with sand paper, in accordance with the coating manufacturer.

3.3 APPLICATION

Apply coating materials in accordance with JASS 18 and JASS 23, the each paint and coating manufacturer’s instruction, and specified hereinafter. Maintain MSDS of all chemicals at the work site.

3.3.1 Steel, Galvanized Steel(GS), Cast Iron Surface, except Electrical Conduit Pipe

Apply anticorrosive paint and two top coats, in accordance with the top coat manufacturer.

Apply anticorrosive paint in accordance with the top coat manufacturer, and two top coats, synthetic resin type ready mixed paint, JIS K 5516, in the rate of 0.08 kg/m² per one coat, in accordance with JASS 18, “Synthetic Resin Type Ready Mixed Paint”, Type B.

3.3.2 Electrical Conduit Pipe Surface

Apply anticorrosive paint, JIS K 5621, Type 1 for interior, and JIS K 5674 for exterior, in accordance with the top coat manufacturer, and two top coats, synthetic resin type ready mixed paint, JASS 18, M-109 , in accordance with JASS 18.

Aluminum paint, JIS K 5492, in accordance with JASS 18.

3.3.3 Wood and Plywood Surface

Apply sealer and two top coats, in accordance with the top coat manufacturer.

3.3.4 Decorated(D-) Wood Molding and Wood Door Surface

Apply one coat of oil stain and two coats of clear lacquer in accordance with each paint manufacturer.

3.3.5 Gypsum Board, Interior Concrete, Cement Board, Cement Mortar, Interior Concrete Surface, and Glass Cloth

Apply sealer and two top coats, in accordance with the top coat manufacturer.

3.3.6 Waterproof Gypsum Board Surface

Apply sealer and two top coats, in accordance with the top coat manufacturer.

Waterproofing on Interior Concrete Surface

Apply primer and two top coats, in accordance with the top coat manufacturer.

Exterior Concrete Wall Surface

New Surface: Apply one coat of sealer, base coat, pattering coat, and two top coats, in accordance with the coating system manufacturer.

Existing Surface: Apply one coat of sealer and two top coats, in accordance with the coating system manufacturer.

Exterior Concrete Wall Surface

Apply sealer and two top coats, in accordance with the top coat manufacturer.

Exterior Concrete and Cement Mortar Surface

Apply primer and two top coats, in accordance with the coating system manufacturer.

3.3.7 PVC Surface

Apply primer and two top coats, in accordance with the top coat manufacturer.

3.4 IDENTIFICATION SYSTEMS FOR MECHANICAL PIPE

3.4.1 Pipe Color Code and Identification

Color Coding for Facility/Utility Connections: Paint piping the designated color in finished spaces. Wrap around outside of piping and conduit with self-adhering plastic bands with the designated color and the width in unfinished spaces at maximum of 6 meter intervals. In addition to color coding provide labels to identify contents of pipes and arrows to show direction of flow. Labels shall have color coded background to signify levels of hazard in accordance with ASME A13.1. Legends and type and size of characters shall also conform as ASME A13.1. Make labels of plastic sheet with pressure sensitivity suitable for the intended applications, or they may be premolded of plastic to fit over pipe.

On piping not covered by ASME A13.1, stencil approved names or code letters, in letters a minimum of 13 mm (1/2 inch) high for piping and a minimum of 50 mm (2 inches) high elsewhere. Stencil arrow-shaped markings on piping to indicate direction of flow using black stencil paint.

Color Coding for Facility Utility Connections

Service	Color	FED-STD-595 No.
Potable Water	Blue	15102
Domestic Hot Water	Orange	12473
Chilled Water	Blue	15102
Hot Water Heating	Orange	12473

Chilled/Hot Water	Orange/Blue	12473/15102
Drain Water	Black	17038
Vent	Black	17038
Steam	Gray	26493
Refrigerant	Gray	26251
High Temperature Water	Gray	26493
Sewer	Black	17038
Drain Water	Black	17038
Cooling Water	White	17875
Oily Waste Water	Yellow	13538
Fire Protection	Red	11105
Fuel Oil	Yellow	13538
Lubricating Oil	Cream	13594
Compressed Air	Gray	26251
Control Wire	Blue	15177
Salt Water	Brown	N/A*

* Brown color of the salt water piping shall mach existing adjacent salt water piping.

Width of Band	Outside Diameter of Piping or Covering
1″ (25 mm)	Under 3 1/2″ (Under 90 mm)
2″ (50 mm	3 2/1″ to 13″ (90mm to 330 mm)
6″ (150 mm)	Over 13″ (Over 330 mm)

Color Coding for Shore-To-Ship Utility Connections: Paint hose connection fittings and shut-off valves the designated color. In addition to color coding provide labels to identify contents of pipes and arrows to show direction of flow. Labels shall have color coded background to signify levels of hazard in accordance with ASME A13.1. Legends and type and size of characters shall also conform as ASME A13.1. Make labels of plastic sheet with pressure sensitivity suitable for the intended applications, or they may be premolded of plastic to fit over pipe.

On piping not covered by ASME A13.1, stencil approved names or code letters, in letters a minimum of 13 mm (1/2 inch) high for piping and a minimum of 50 mm (2 inches) high elsewhere. Stencil arrow-shaped markings on piping to indicate direction of flow using black stencil paint.

Color Coding for Shore-to-Ship Utility Connections

Service	Color	FED-STD-595 No.
Potable Water*	Blue	15044
Water Provided for Fire Protection**	Red	11105
Chilled Water Striped	Blue/White	15044/17886
Oily Waste Water Striped	Yellow/Black	13538/17038
Sewer	Gold	17043
Steam	White	17886
High Pressure Air	Gray	16081
Low Pressure Air	Tan	10324
Fuel	Yellow	13655

* This includes connections serving domestic functions.
** This includes non-potable salt water or, at some locations, fresh water connections provided for fire protection (may also include flushing and cooling requirements). Note: This does not include waterfront fire hydrants.

-- End of Section --

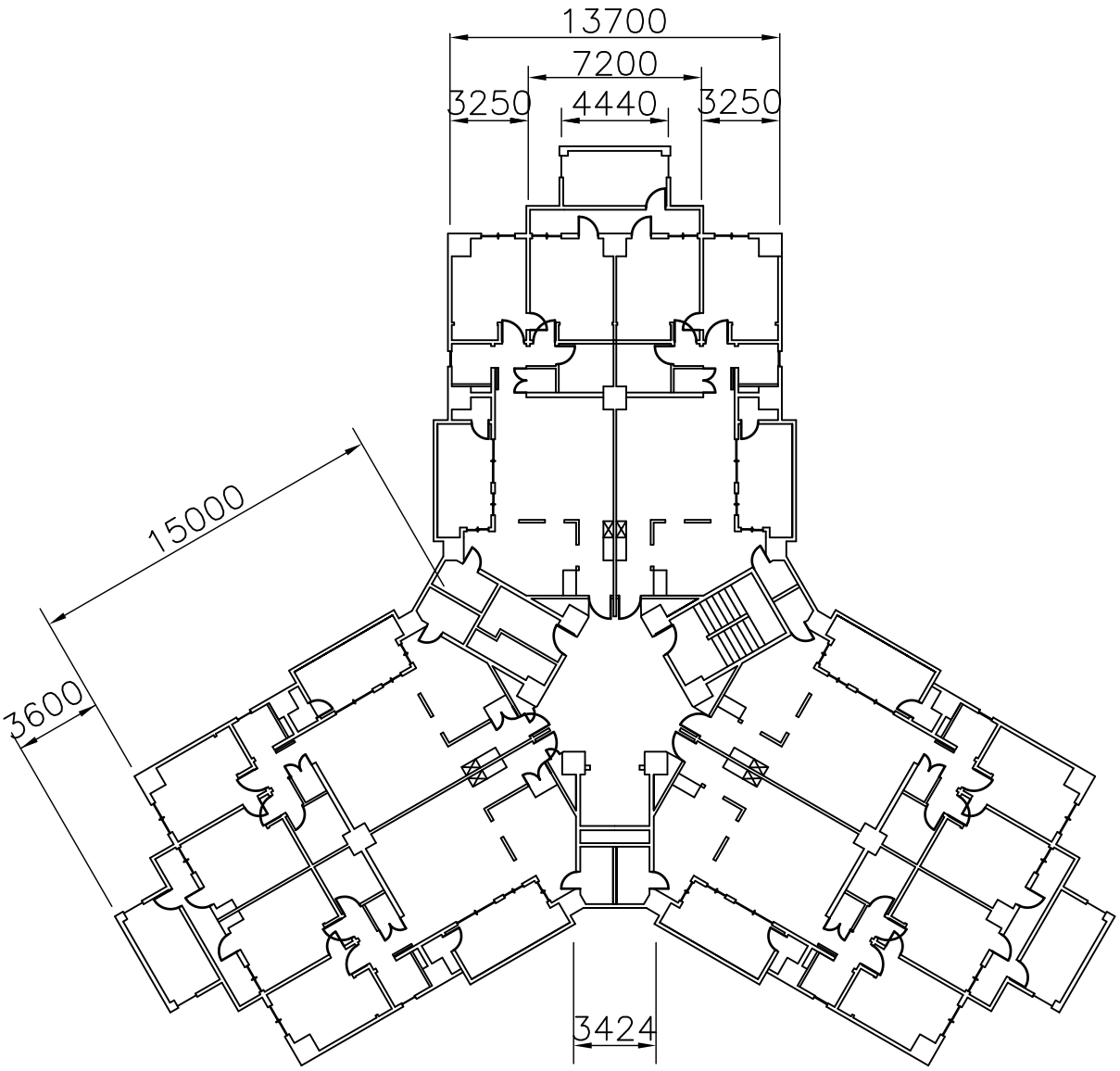

TYPICAL FLOOR PLAN (1) :

NOT TO SCALE :

IDIQ EXTERIOR PAINTING CONTRACT FOR VARIOUS AREAS TYPICAL FLOOR PLAN (1)		DES: (PRY 211)	
		SHT. 1 OF 27	
		eProject # 1358486	DIV. NO. A1

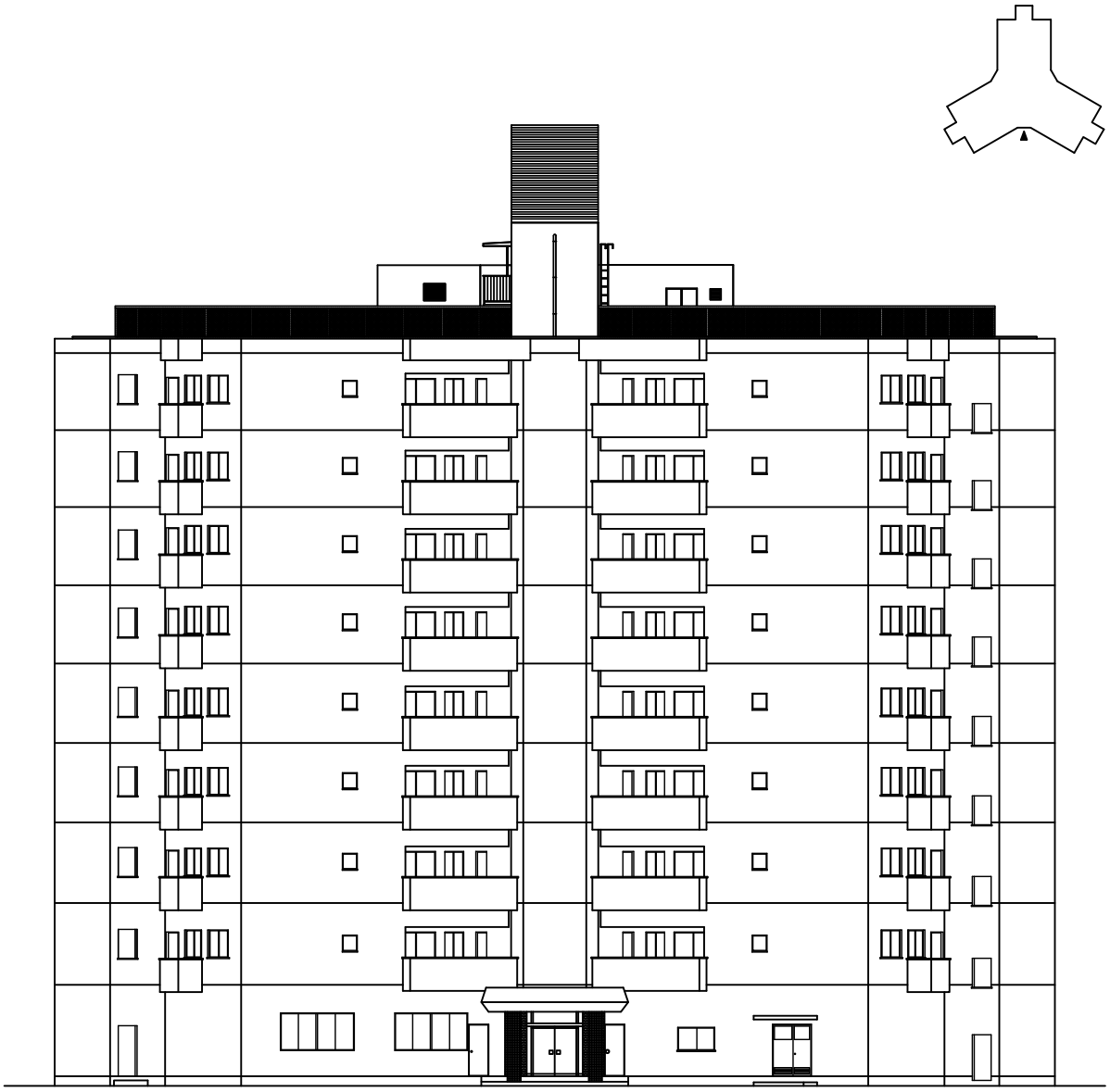

TYPICAL ELEVATION (1) :

NOT TO SCALE :

IDIQ EXTERIOR PAINTING CONTRACT FOR VARIOUS AREAS TYPICAL ELEVATION (1)		DES: (PRY 211)	
		SHT. 2 OF 27	
		eProject # 1358486	DIV. NO. A2

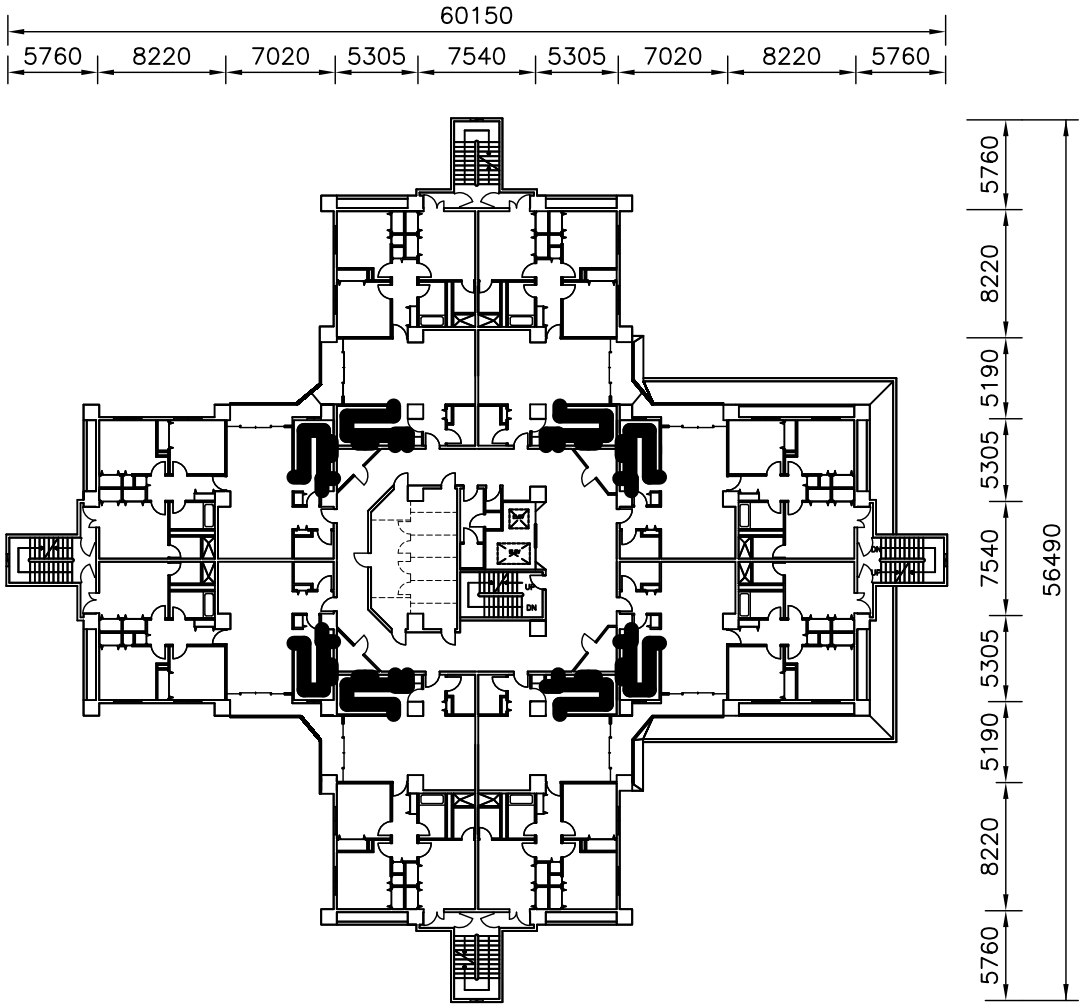

TYPICAL FLOOR PLAN (2) :

NOT TO SCALE :

IDIQ EXTERIOR PAINTING CONTRACT FOR VARIOUS AREAS TYPICAL FLOOR PLAN (2)		DES: (PRY 211)	
		SHT. 3 OF 27	
		eProject # 1358486	DIV. NO. A3

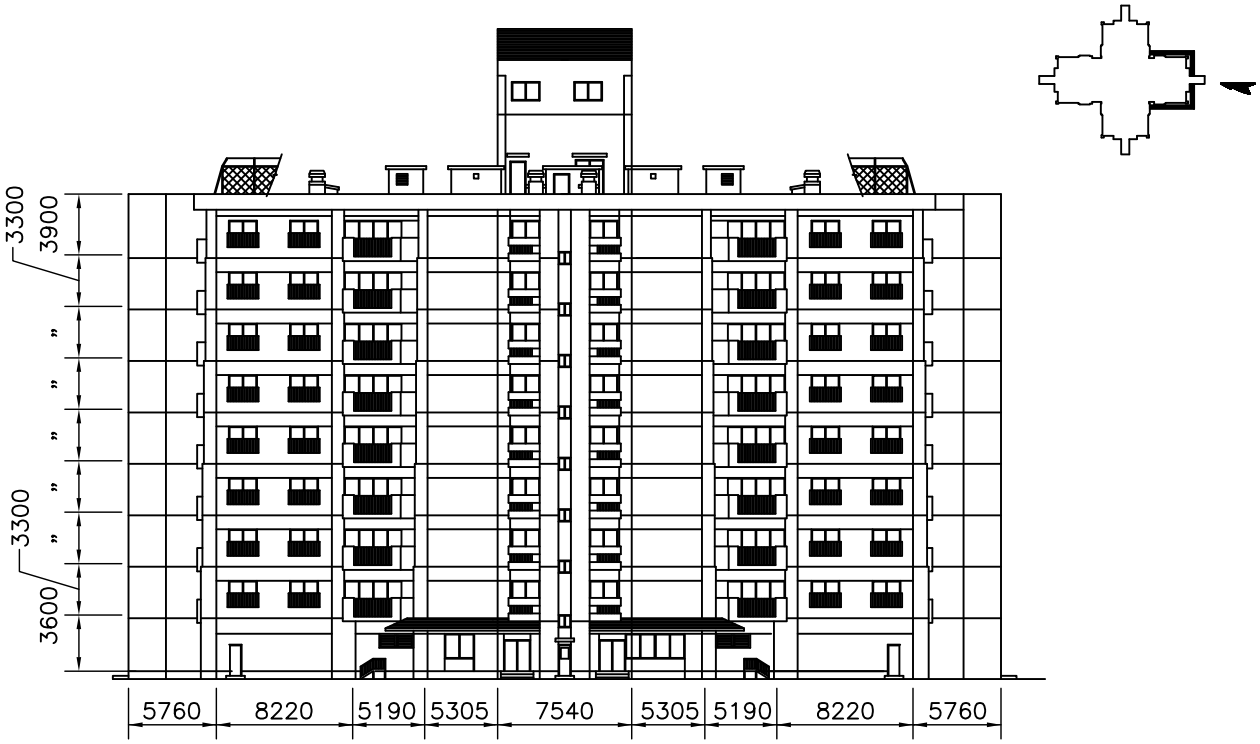

TYPICAL ELEVATION (2) :

NOT TO SCALE :

IDIQ EXTERIOR PAINTING CONTRACT FOR VARIOUS AREAS TYPICAL ELEVATION (2)		DES: (PRY 211)	
		SHT. 4 OF 27	
		eProject # 1358486	DIV. NO. A4

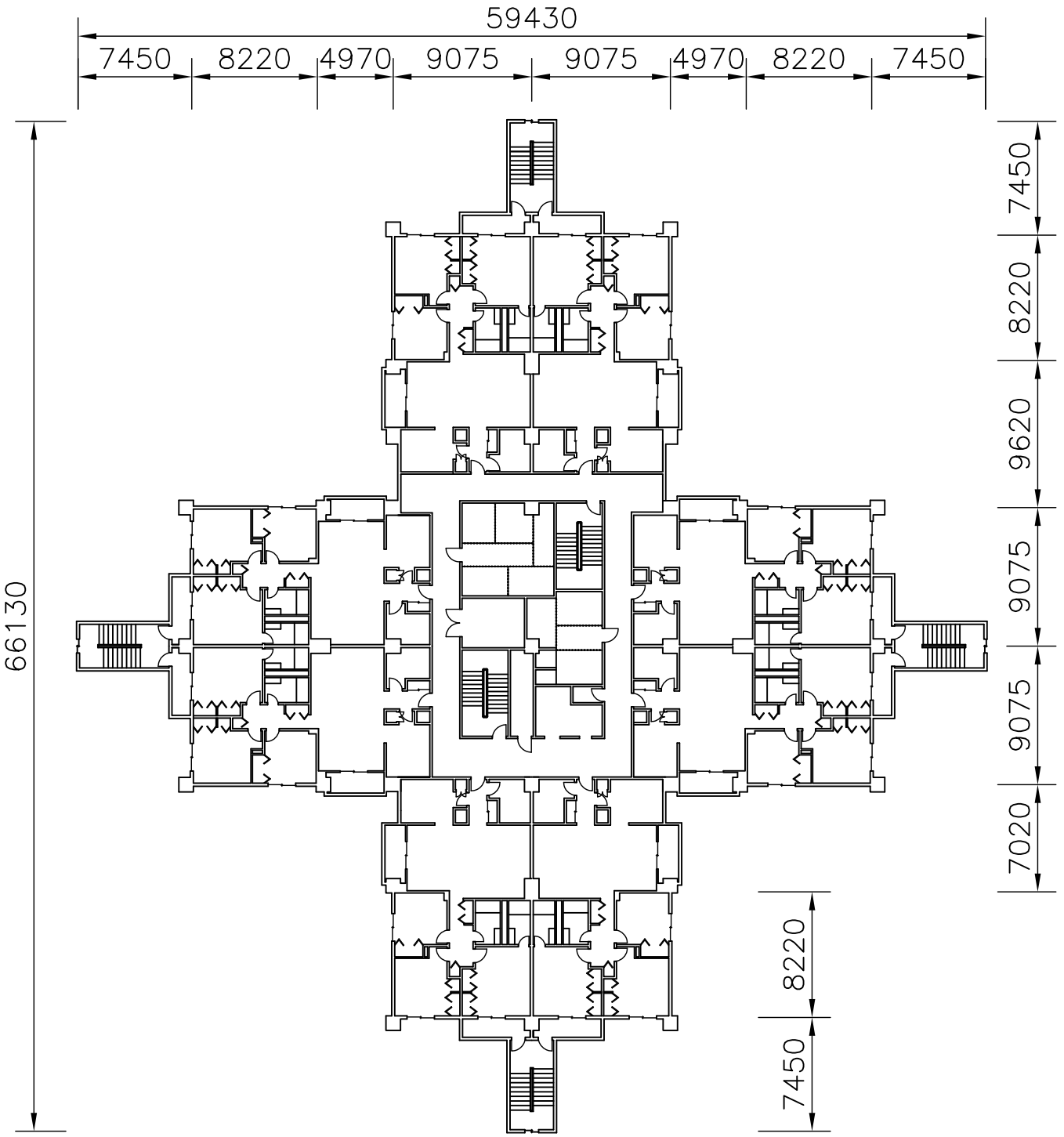

TYPICAL FLOOR PLAN (3) :

NOT TO SCALE :

IDIQ EXTERIOR PAINTING CONTRACT FOR VARIOUS AREAS TYPICAL FLOOR PLAN (3)		DES: (PRY 211)	
		SHT. 5 OF 27	
		eProject # 1358486	DIV. NO. A5

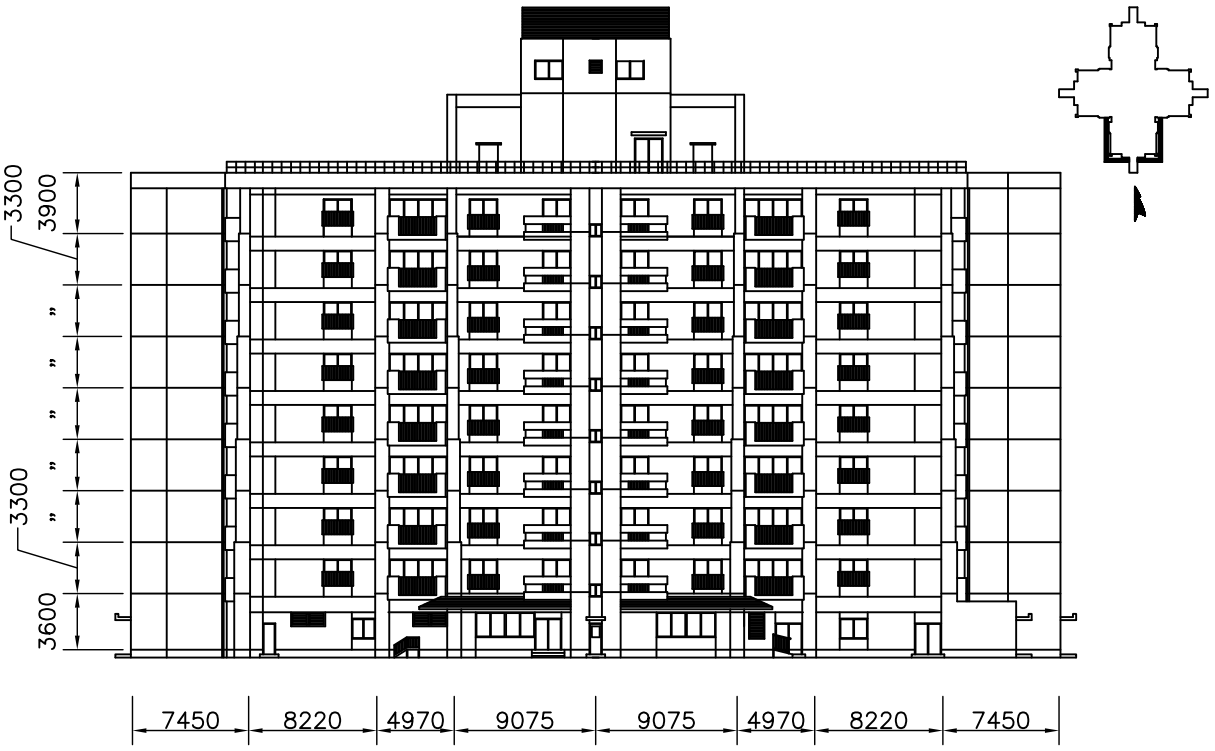

TYPICAL ELEVATION (3) :

NOT TO SCALE :

IDIQ EXTERIOR PAINTING CONTRACT FOR VARIOUS AREAS TYPICAL ELEVATION (3)		DES: (PRY 211)	
		SHT. 6 OF 27	
		eProject # 1358486	DIV. NO. A6

TYPICAL FLOOR PLAN (4) :

NOT TO SCALE :

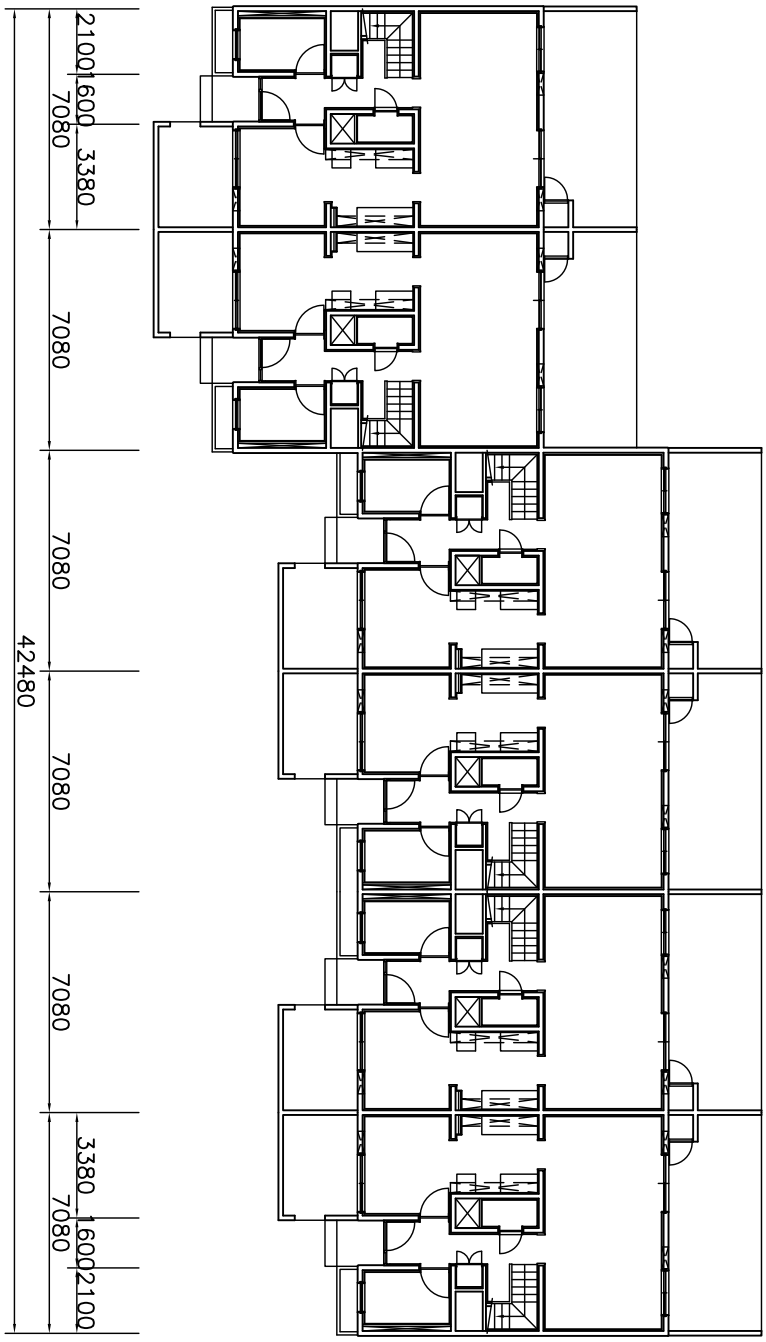

IDIQ EXTERIOR PAINTING CONTRACT FOR VARIOUS AREAS TYPICAL FLOOR PLAN (4)		DES: (PRY 211)	
		SHT. 7 OF 27	
		eProject # 1358486	DIV. NO. A7

TYPICAL ELEVATION (4) :

NOT TO SCALE :

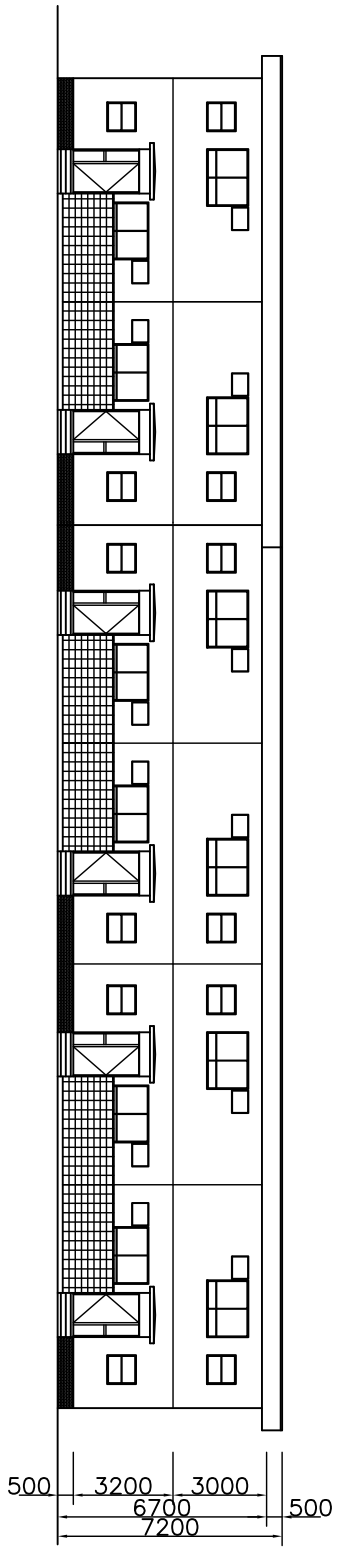

IDIQ EXTERIOR PAINTING CONTRACT FOR VARIOUS AREAS TYPICAL ELEVATION (4)		DES: (PRY 211)	
		SHT. 8 OF 27	
		eProject # 1358486	DIV. NO. A8

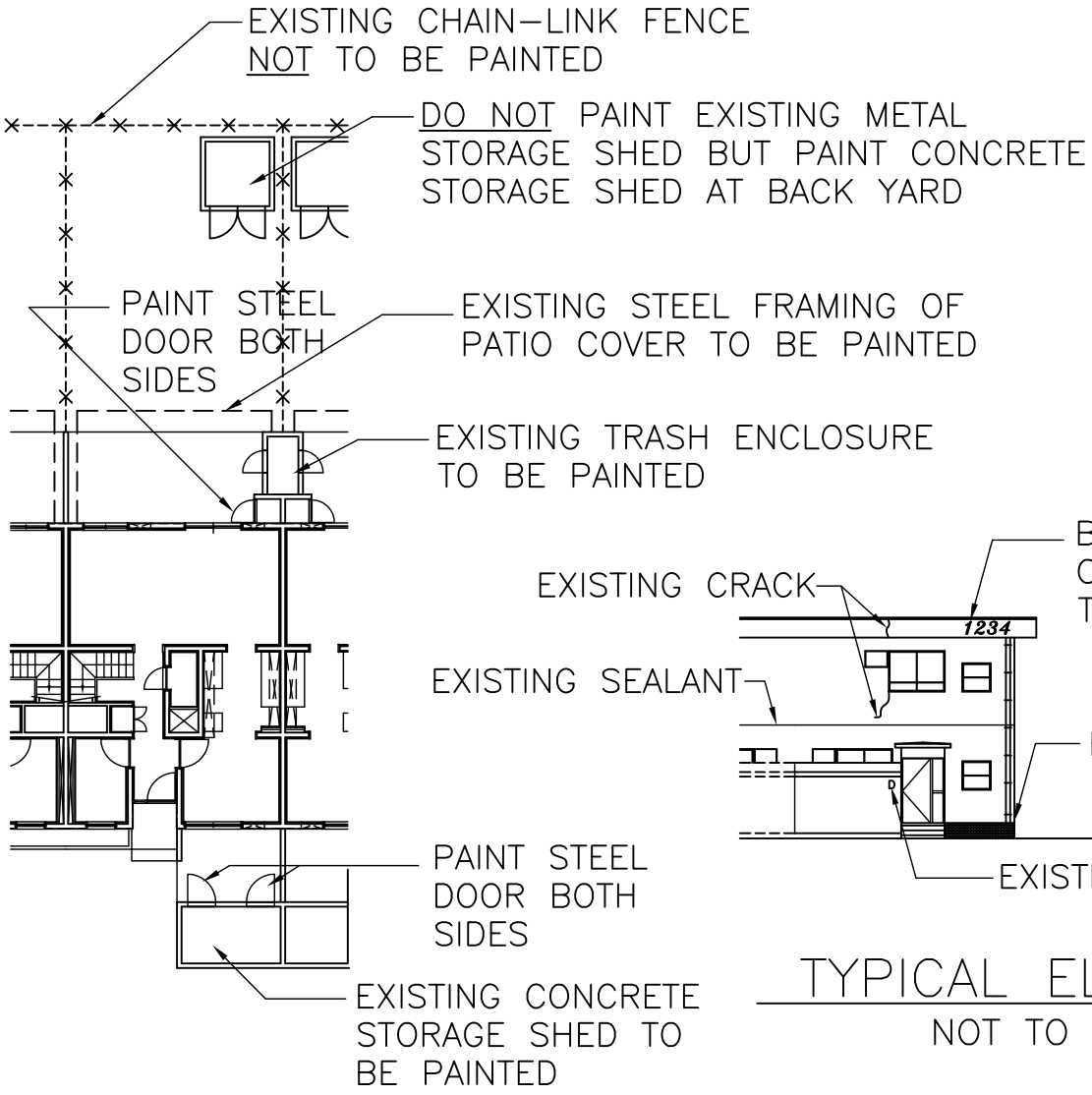

TYPICAL PLAN :

NOT TO SCALE :

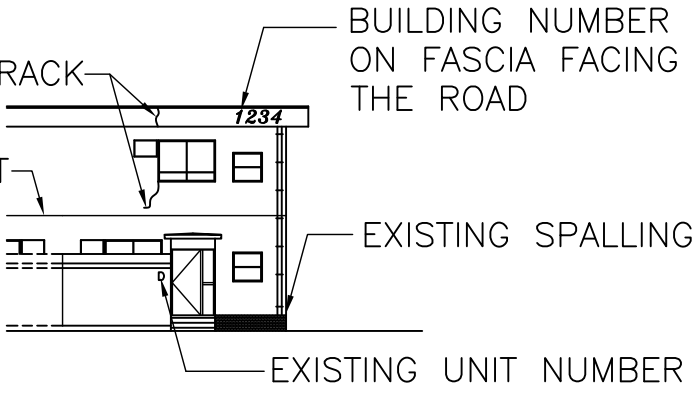

TYPICAL ELEVATION :

NOT TO SCALE :

IDIQ EXTERIOR PAINTING CONTRACT FOR VARIOUS AREAS TYPICAL PLAN AND ELEVATION		DES: (PRY 211)	
		SHT. 9 OF 27	
		eProject # 1358486	DIV. NO. A9

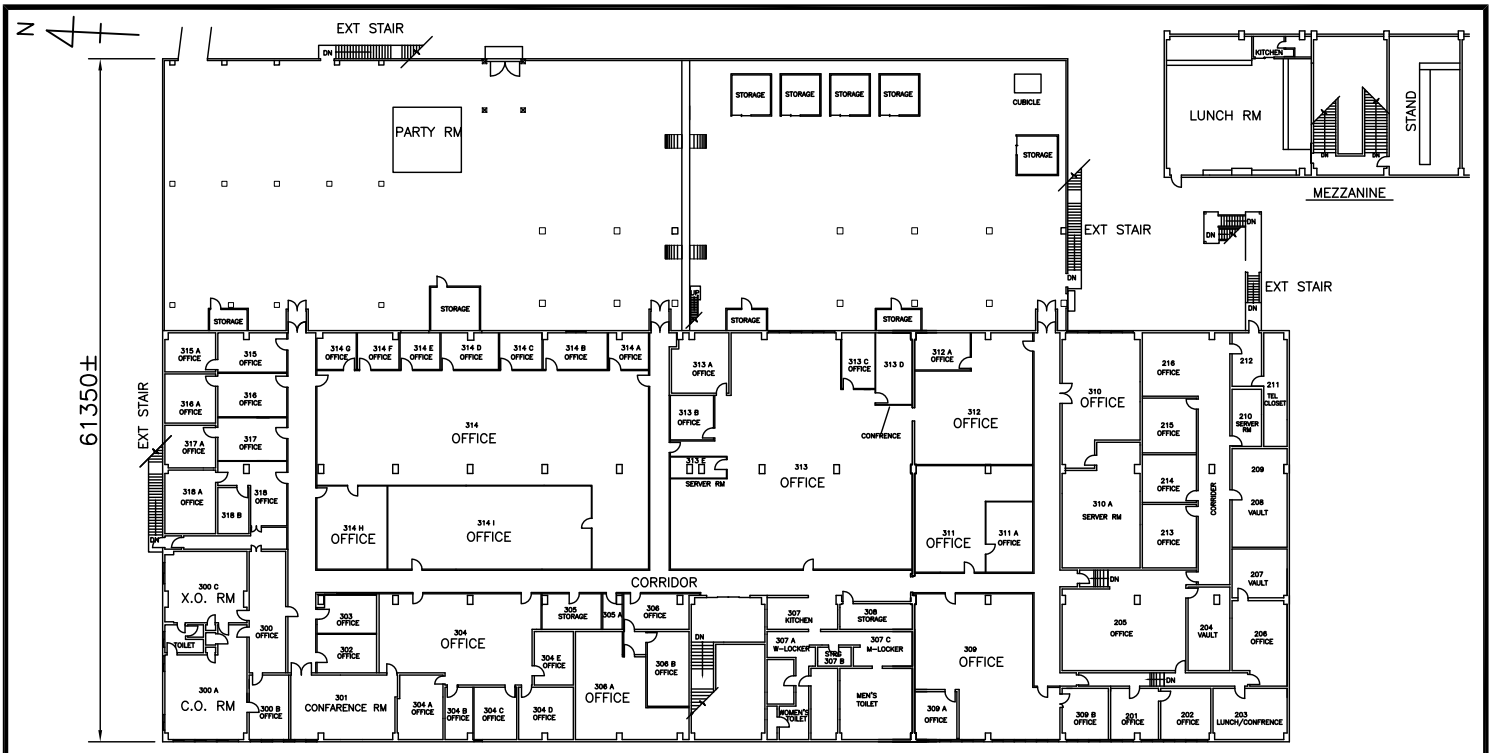

2ND FLOOR

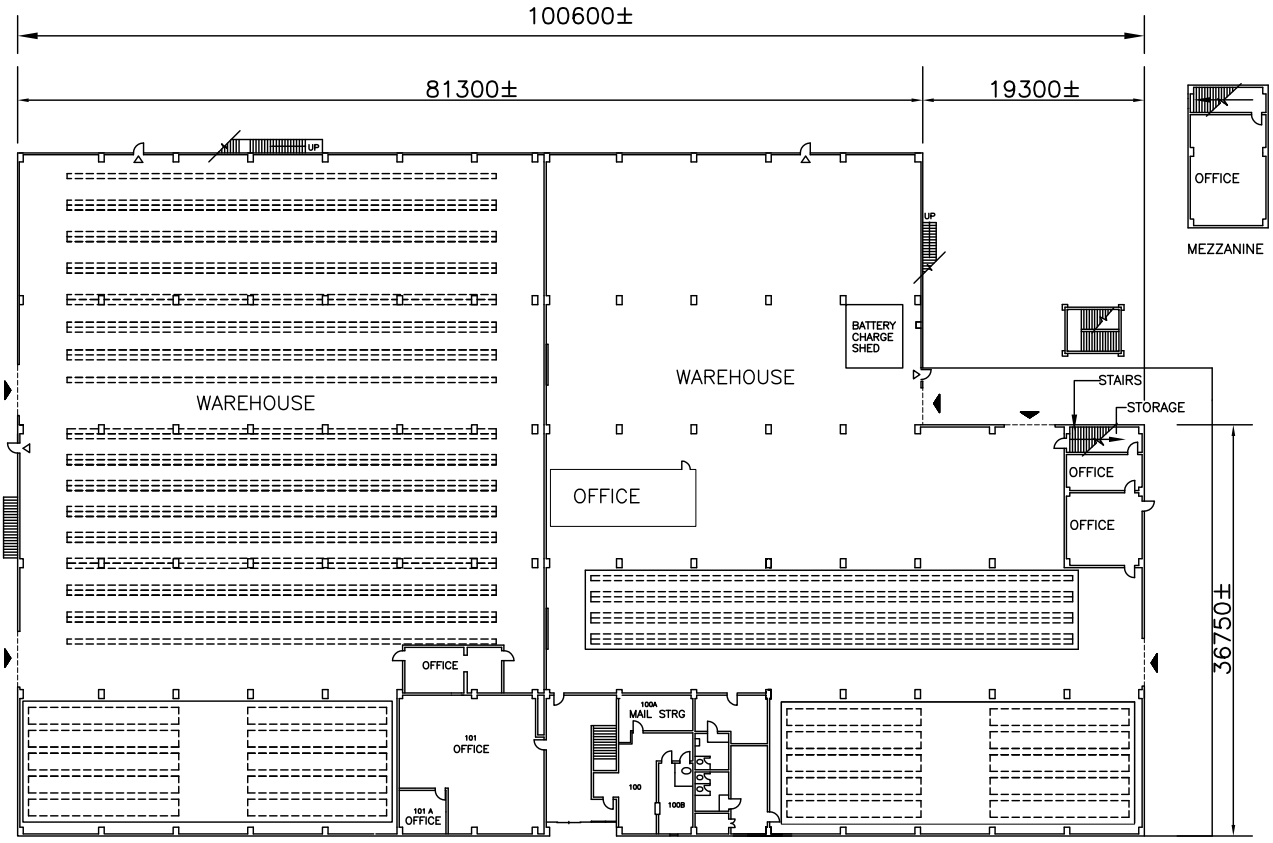

1ST FLOOR

TYPICAL FLOOR PLANS (5)
NOT TO SCALE

IDIQ EXTERIOR PAINTING CONTRACT FOR VARIOUS AREAS TYPICAL FLOOR PLANS (5)		DES: (PRY 211)	
		SHT. 10 OF 27	
		eProject # 1358486	DIV. NO. A10

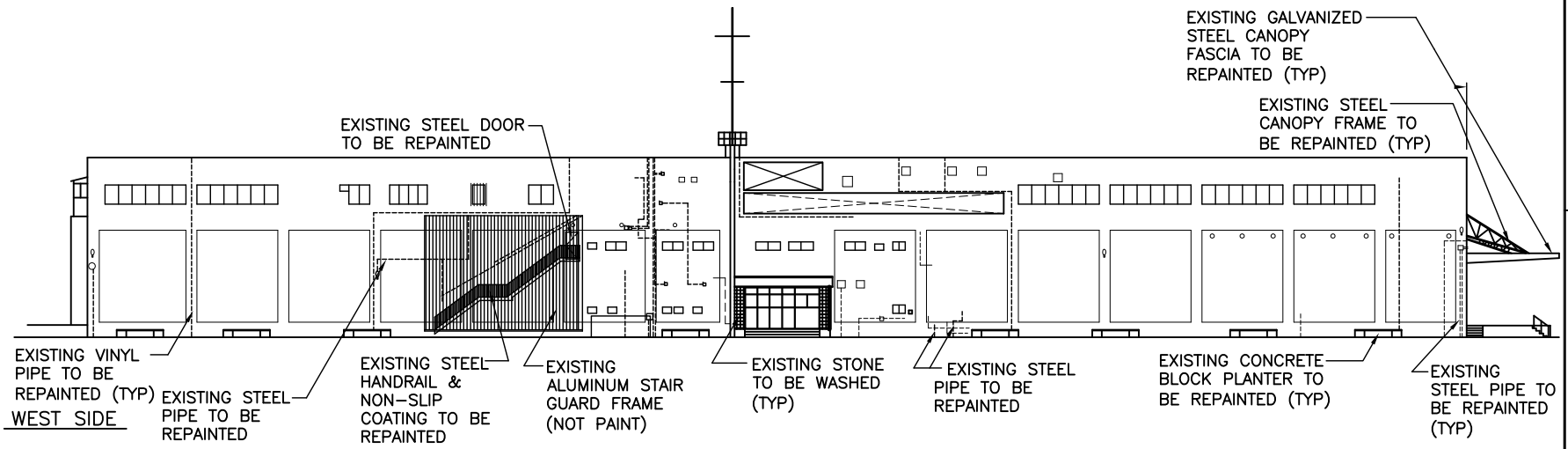

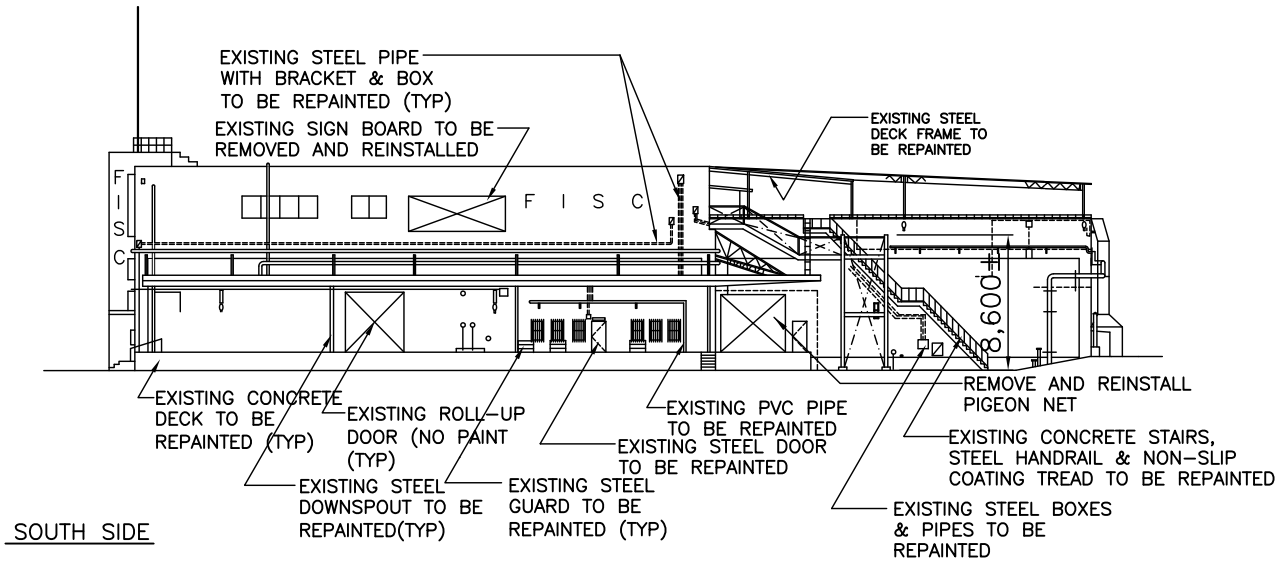

TYPICAL ELEVATIONS (5-1):
SCALE: 1/500

DES: (PRY 211)
SHT. 11 OF 27
eProject # 1358486
DIV. NO. A11

IDIQ EXTERIOR PAINTING CONTRACT
FOR VARIOUS AREAS
TYPICAL ELEVATIONS (5-1)

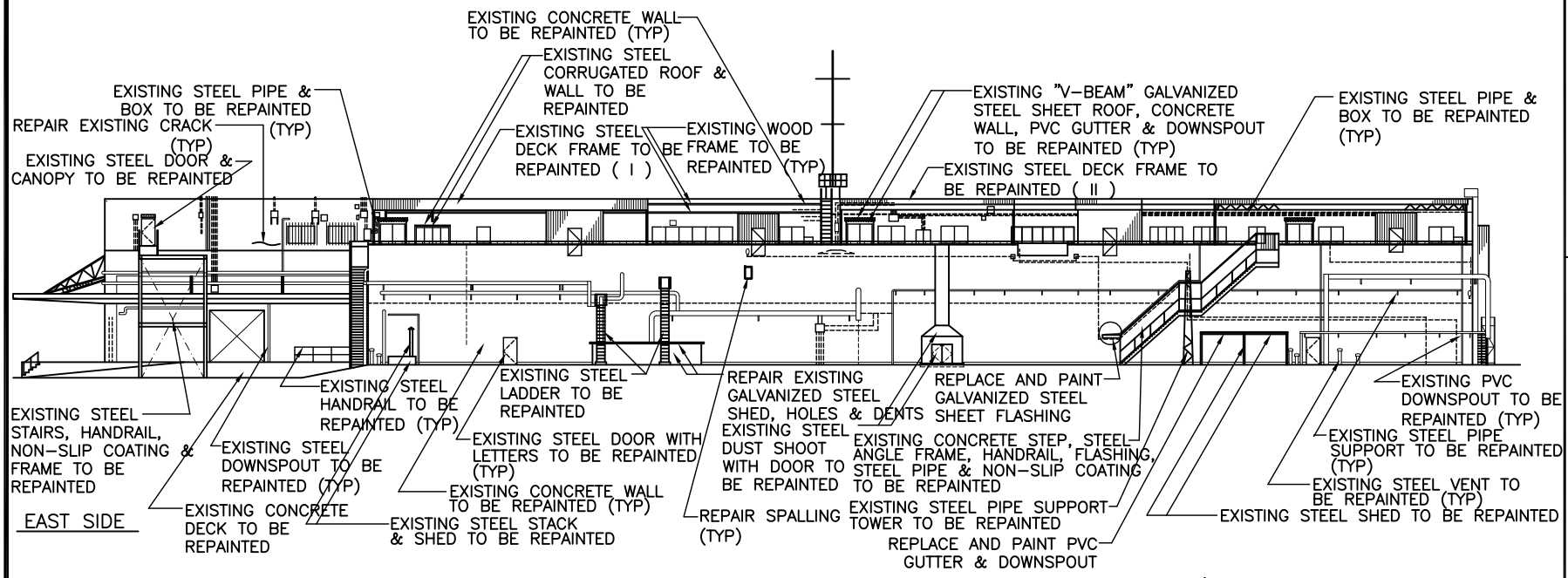

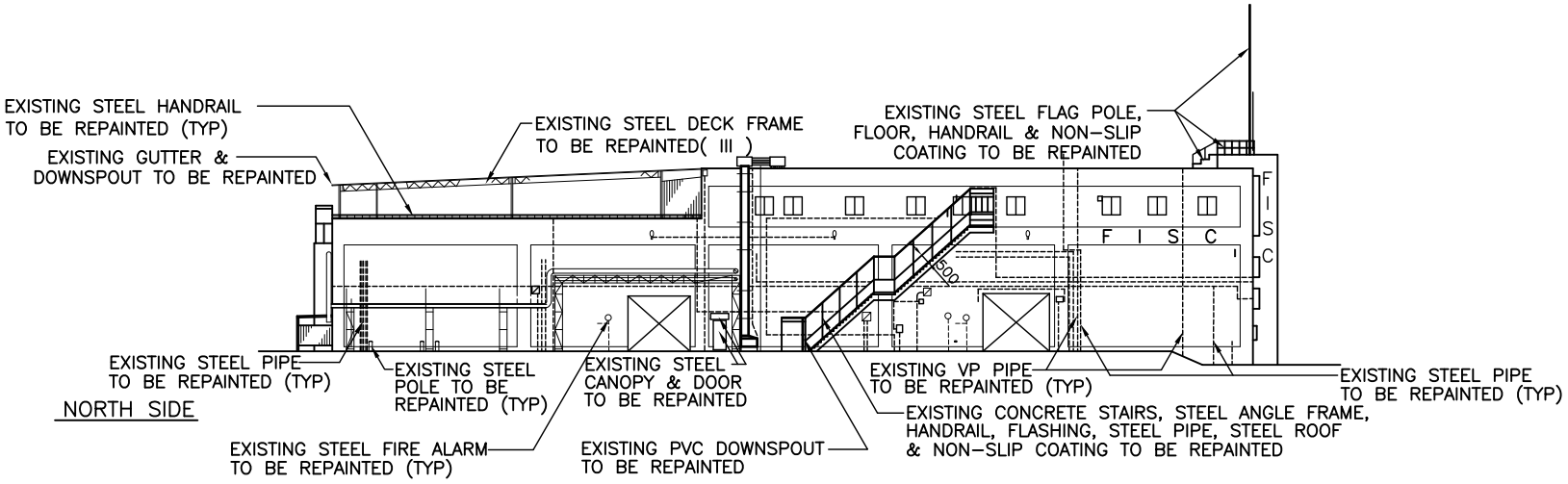

TYPICAL ELEVATIONS (5-2)
SCALE: 1/500

DES: (PRY 211)
SHT. 12 OF 27
eProject # 1358486
DIV. NO. A12

IDIQ EXTERIOR PAINTING CONTRACT
FOR VARIOUS AREAS
TYPICAL ELEVATIONS (5-2)

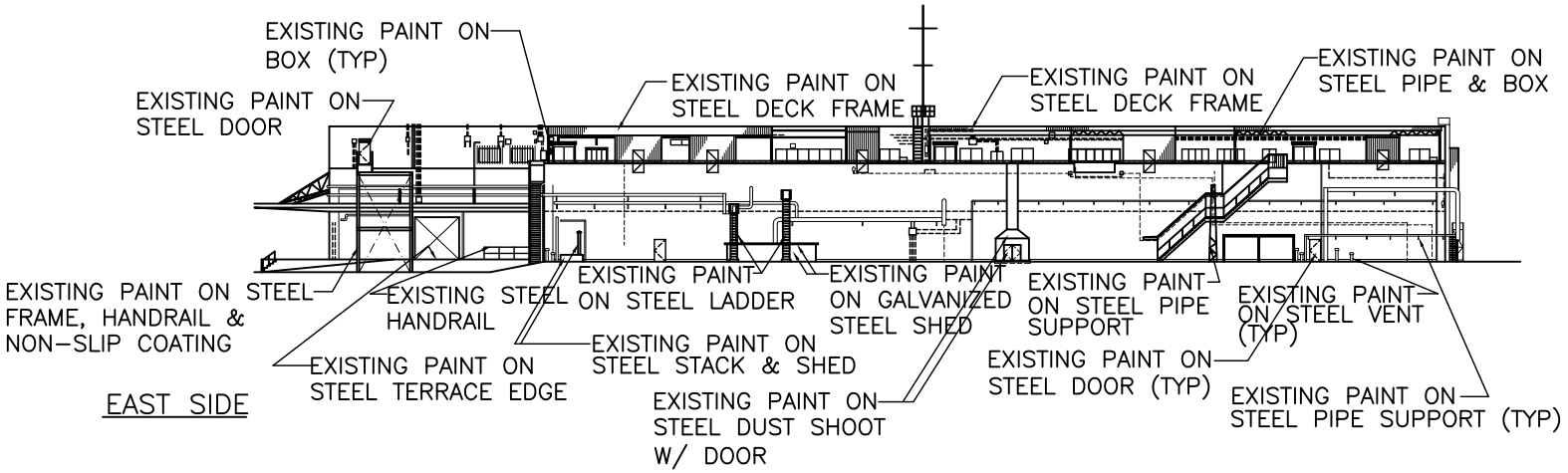

EAST SIDE

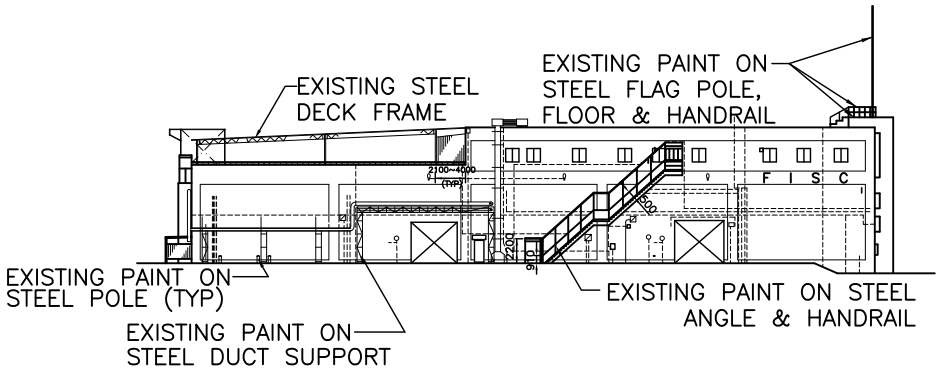

NORTH SIDE

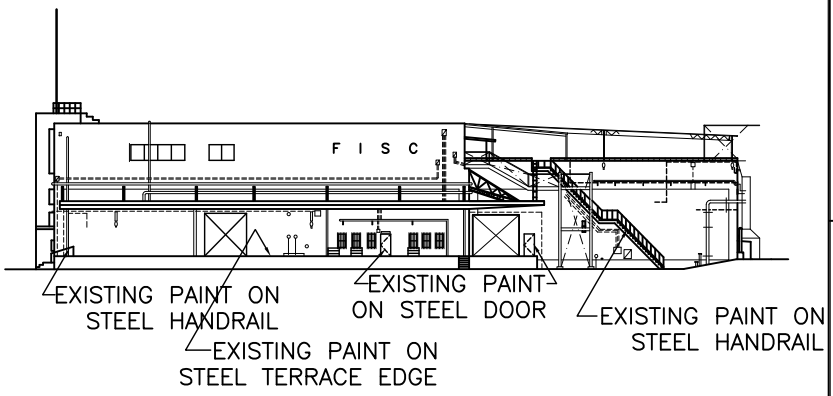

SOUTH SIDE

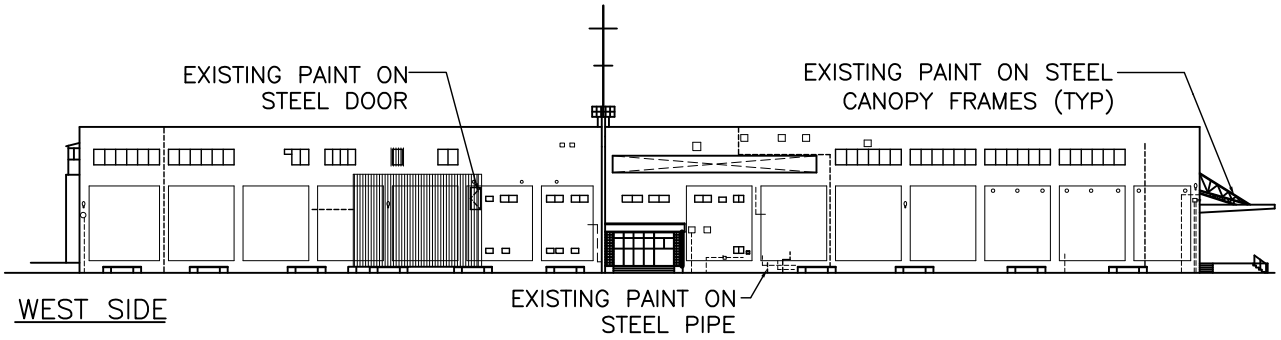

WEST SIDE

LEAD BASED PAINT PORTIONS:
NOT TO SCALE

DES: (PRY 211)	SHT. 13 OF 27	DIV. NO. A13
	eProject # 1358486	

IDIQ EXTERIOR PAINTING CONTRACT
FOR VARIOUS AREAS
TYPICAL LEAD BASED PAINT PORTIONS

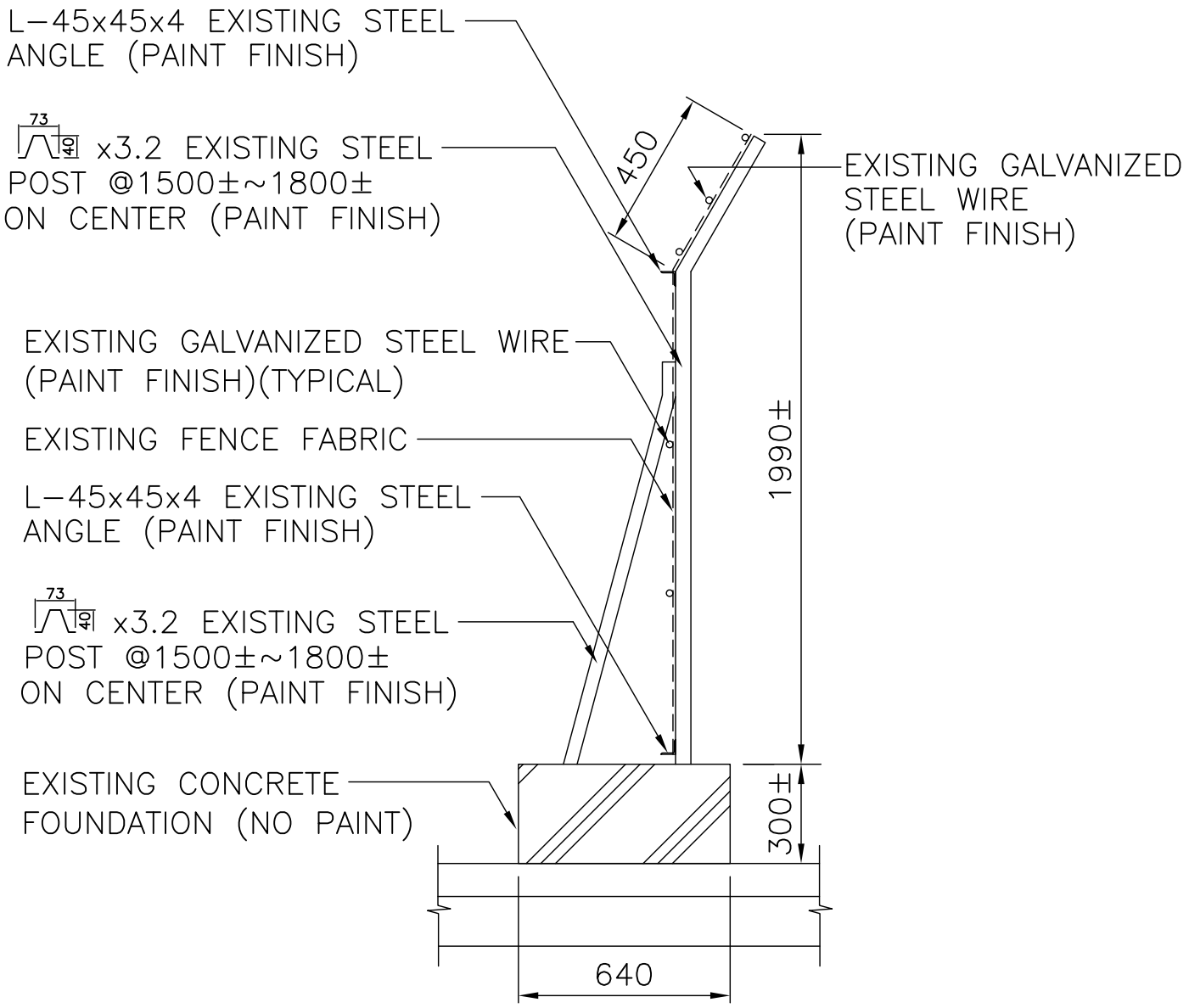

FENCE DETAIL :

NOT TO SCALE :

ITEM NO. A002, B002, C002, D002 & E002
ITEM NO. A003, B003, C003, D003 & E003
ITEM NO. A005, B005, C005, D005 & E005

IDIQ EXTERIOR PAINTING CONTRACT FOR VARIOUS AREAS FENCE DETAIL		DES: (PRY 211)	
		SHT. 14 OF 27	
		eProject # 1358486	DIV. NO. A14

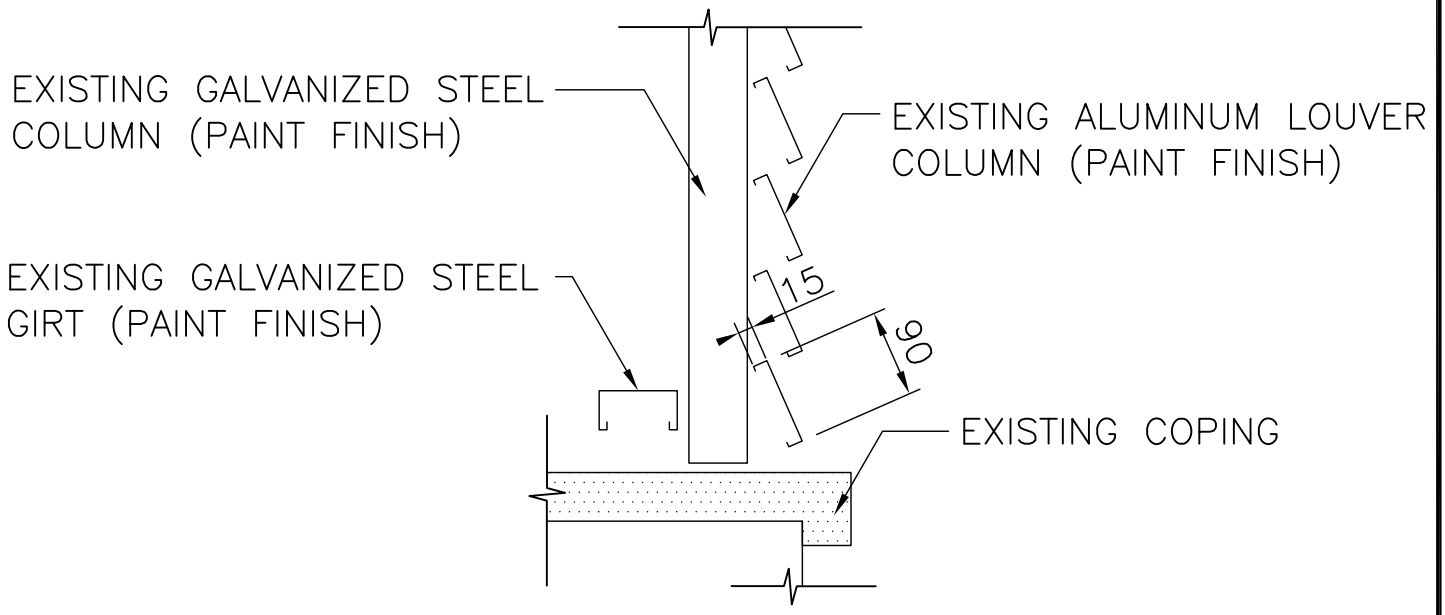

ALUMINUM LOUVER DETAIL :

NOT TO SCALE :

ITEM NO. A002, B002, C002, D002, E002,
A005, B005, C005, D005, E005,
A008, B008, C008, D008 & E008

IDIQ EXTERIOR PAINTING CONTRACT FOR VARIOUS AREAS ALUMINUM LOUVER DETAIL		DES: (PRY 211)	
		SHT. 15 OF 27	
		eProject # 1358486	DIV. NO. A15

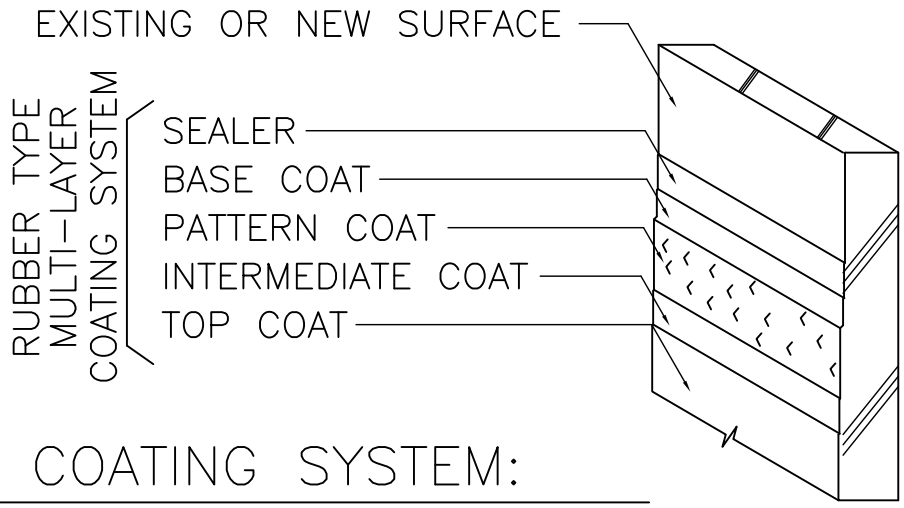

MULTI–LAYER COATING SYSTEM:

NOT TO SCALE : ITEM NO. A0025, B0025, C0025, D0025 & E0025

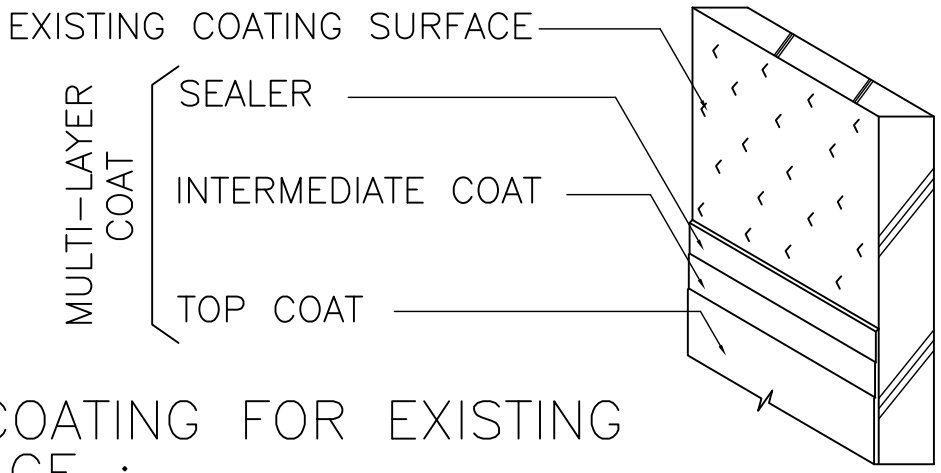

TOP COATING FOR EXISTING SURFACE :

NOT TO SCALE : ITEM NO. A0020, B0020, C020, D0020 & E0020

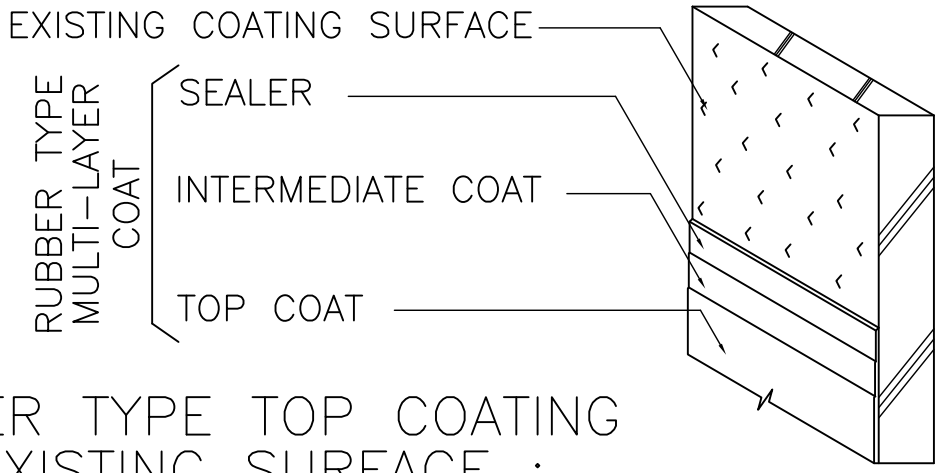

RUBBER TYPE TOP COATING FOR EXISTING SURFACE :

NOT TO SCALE : ITEM NO. A0019, B0019, C0019, D0019 & E0019

IDIQ EXTERIOR PAINTING CONTRACT FOR VARIOUS AREAS DETAILS OF COATINGS		DES: (PRY 211)	
		SHT. 16 OF 27	
		eProject # 1358486	DIV. NO. A16

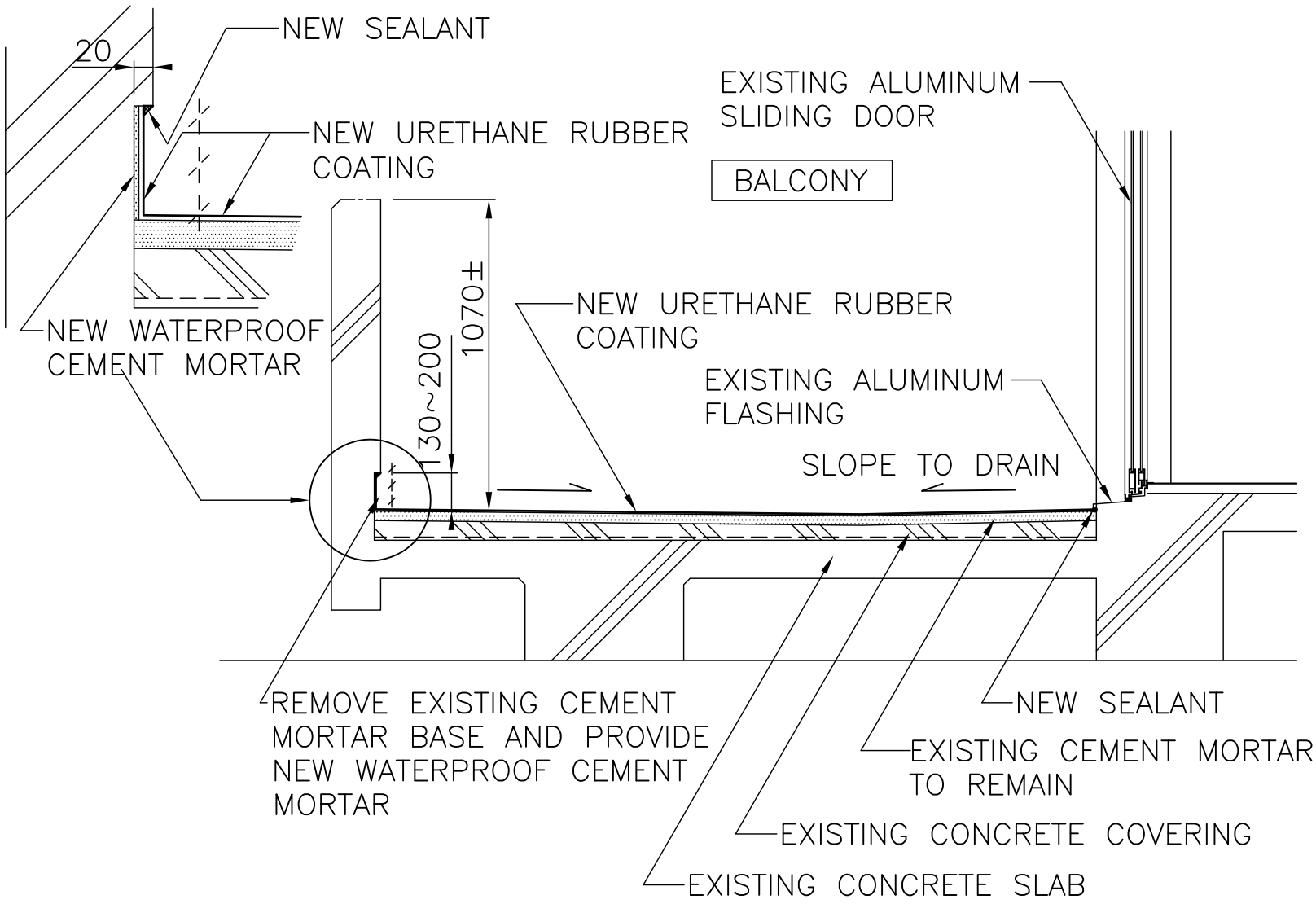

BALCONY DETAIL :

NOT TO SCALE :

ITEM NO. A026, B026, C026, D026, E026,
A027, B027, C027, D027, E027,

DES: (PRY 211)
SHT. 17 OF 27
eProject # 1358486
DIV. NO. A17

IDIQ EXTERIOR PAINTING CONTRACT
FOR VARIOUS AREAS
BALCONY DETAIL

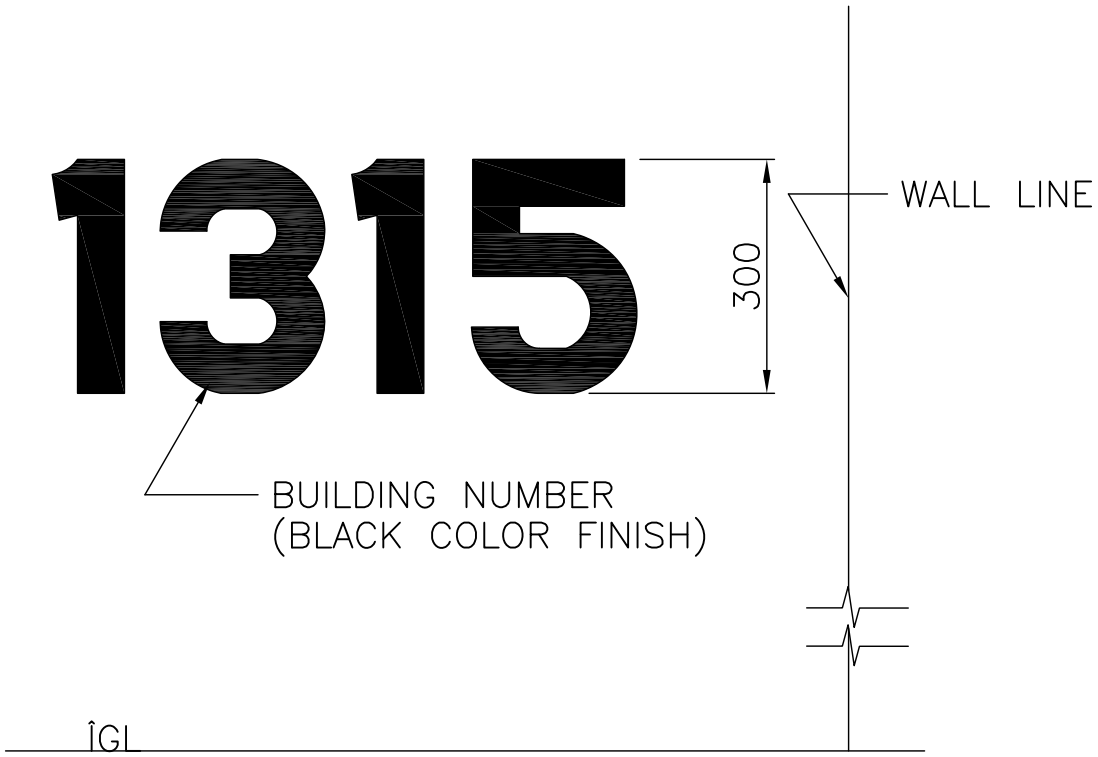

BUILDING NUMBER :

NOT TO SCALE :

ITEM NO. A021, B021, C021, D021 & E021

IDIQ EXTERIOR PAINTING CONTRACT FOR VARIOUS AREAS BULDING NUMBER		DES: (PRY 211)	
		SHT. 18 OF 27	
		eProject # 1358486	DIV. NO. A18

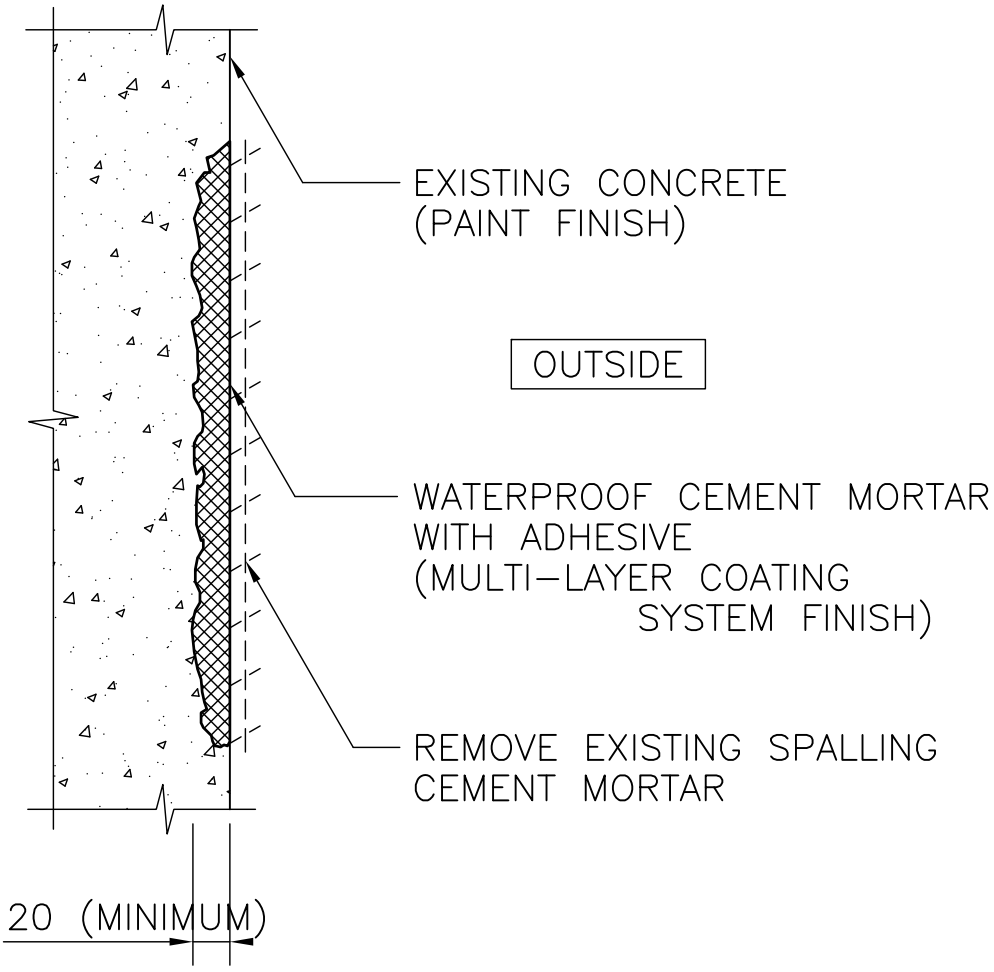

WALL REPAIR DETAIL :

NOT TO SCALE :

ITEM NO. A027, B027, C027, D027 & E027

IDIQ EXTERIOR PAINTING CONTRACT FOR VARIOUS AREAS WALL REPAIR DETAIL		DES: (PRY 211)	
		SHT. 19 OF 27	
		eProject # 1358486	DIV. NO. A19

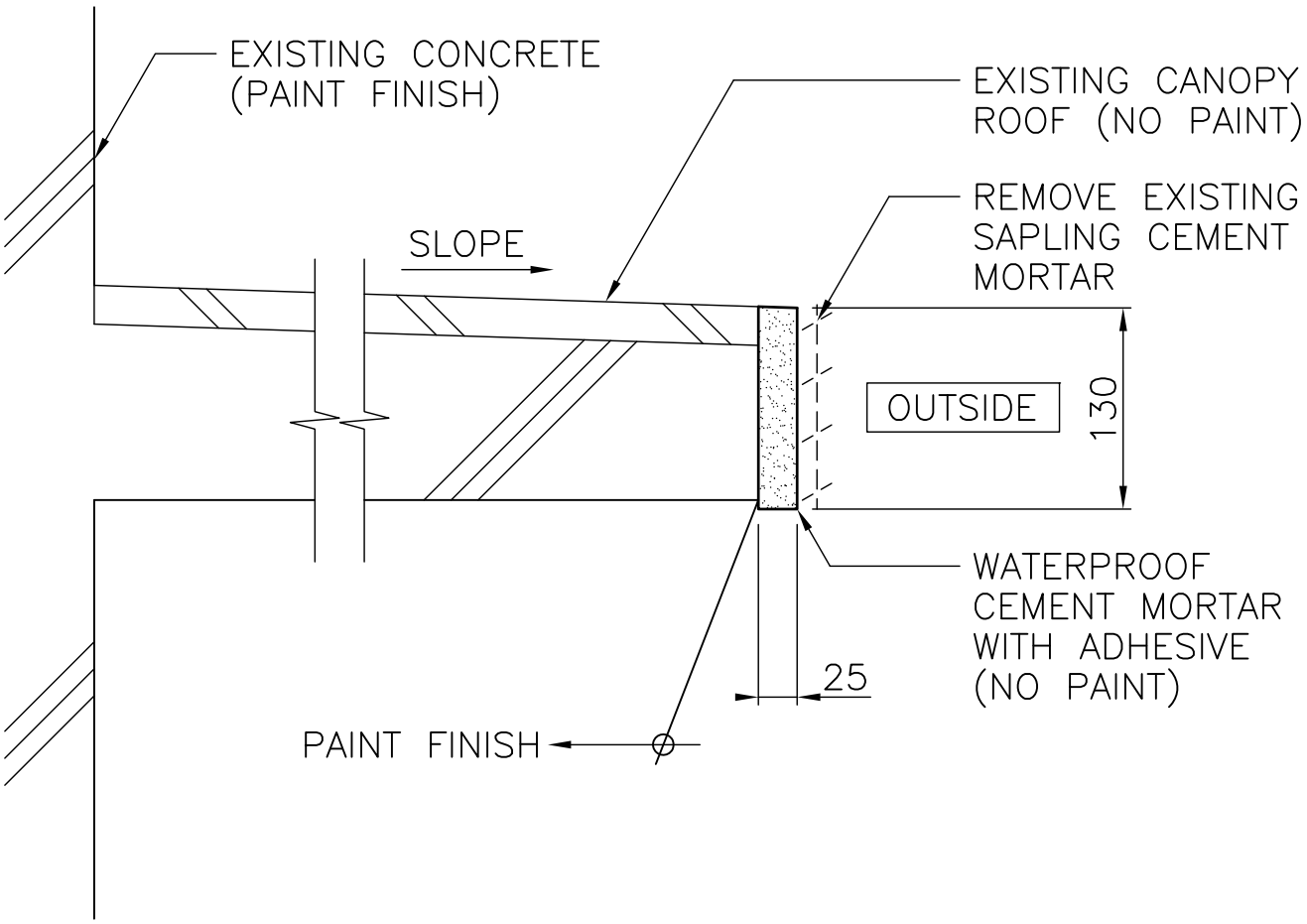

CANOPY DETAIL :

NOT TO SCALE :

ITEM NO. A027, B027, C027, D027 & E027

IDIQ EXTERIOR PAINTING CONTRACT FOR VARIOUS AREAS CANOPY DETAIL		DES: (PRY 211)	
		SHT. 20 OF 27	
		eProject # 1358486	DIV. NO. A20

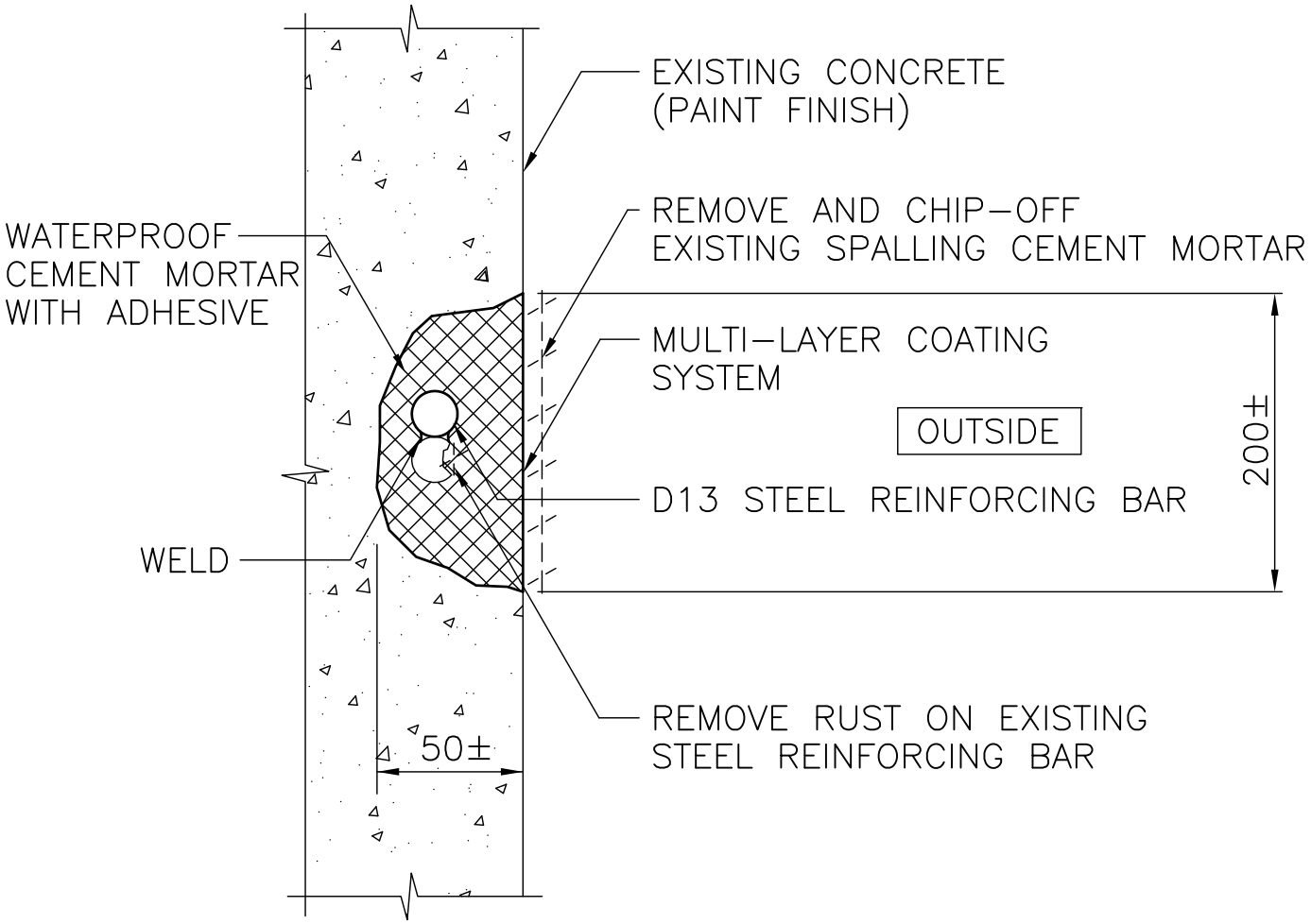

REINFORCING BAR DETAIL :

NOT TO SCALE :

ITEM NO. A028, B028, C028, D028 & E028

IDIQ EXTERIOR PAINTING CONTRACT FOR VARIOUS AREAS REINFORCING BAR DETAIL		DES: (PRY 211)	
		SHT. 21 OF 27	
		eProject # 1358486	DIV. NO. A21

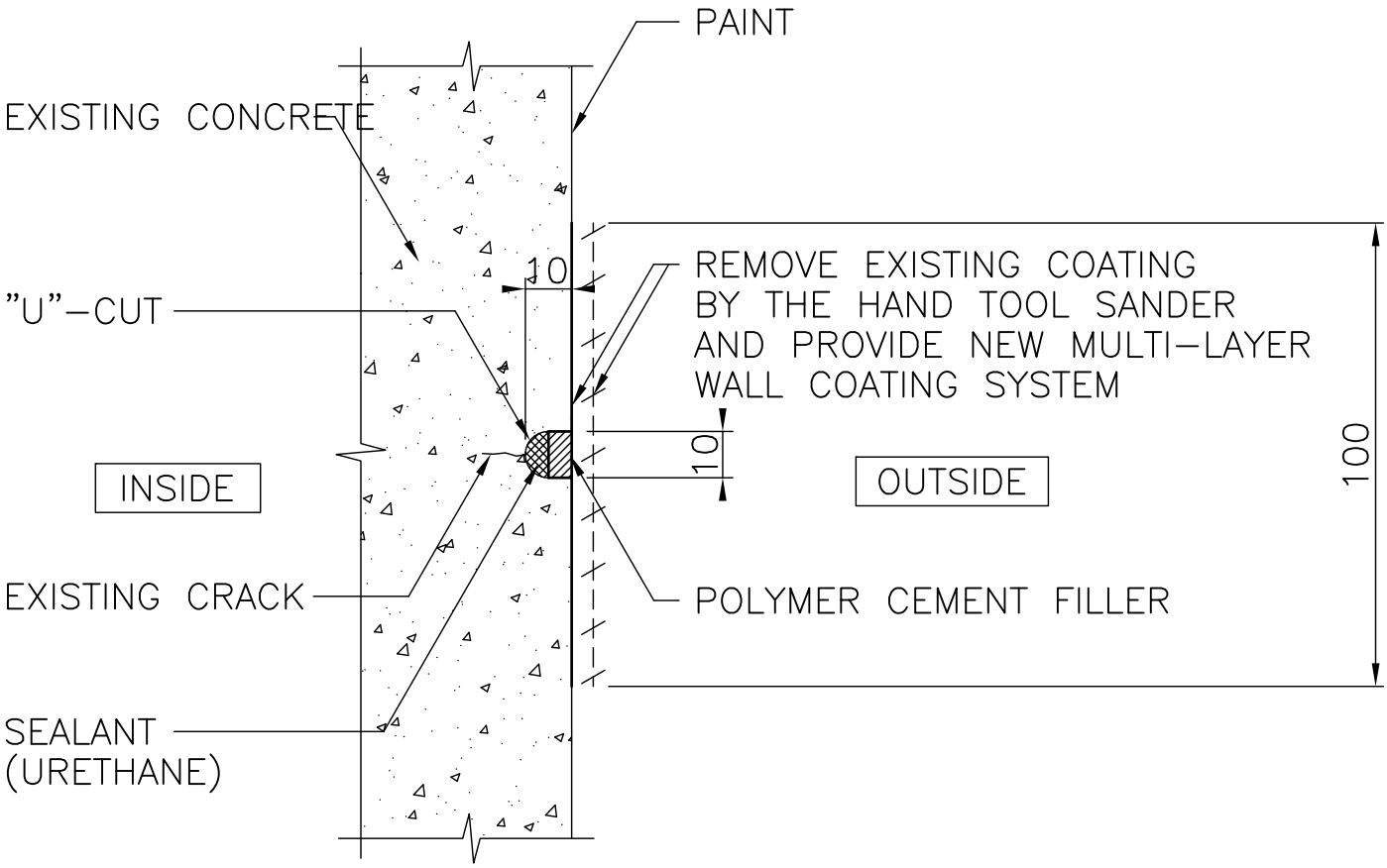

"U"– CUT DETAIL :

NOT TO SCALE :

ITEM NO. A029, B029, C029, D029 & E029

IDIQ EXTERIOR PAINTING CONTRACT FOR VARIOUS AREAS U CUT DETAIL		DES: (PRY 211)	
		SHT. 22 OF 27	
		eProject # 1358486	DIV. NO. A22

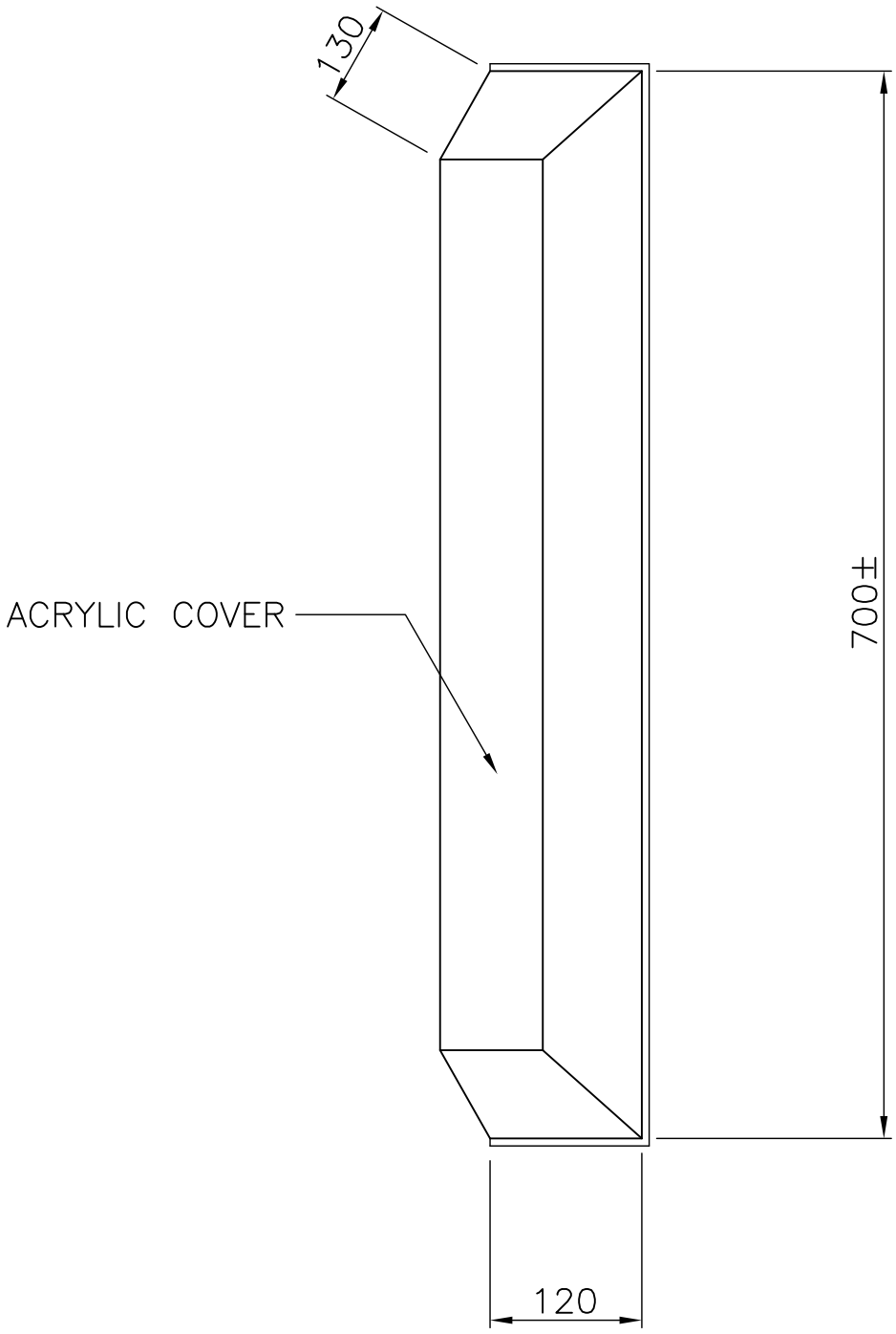

ACRYLIC LIGHT COVER :

NOT TO SCALE :

ITEM NO. A039, B039, C039, D039 & E039

IDIQ EXTERIOR PAINTING CONTRACT FOR VARIOUS AREAS ACRYLIC LIGHT COVER		DES: (PRY 211)	
		SHT. 23 OF 27	
		eProject # 1358486	DIV. NO. A23

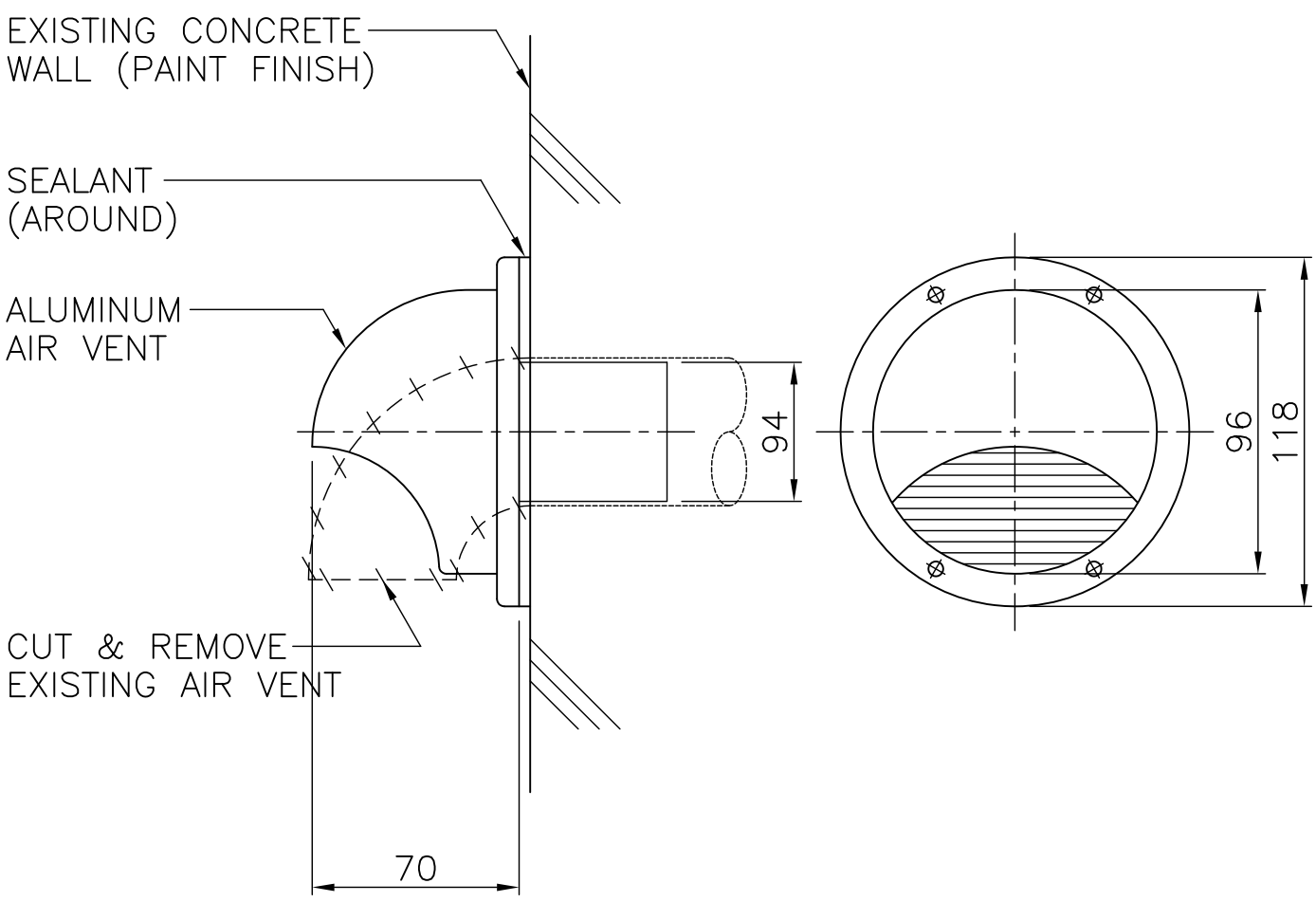

ALUMINUM AIR VENT DETAIL :

NOT TO SCALE :

ITEM NO. A033, B033, C033, D033 & E033

IDIQ EXTERIOR PAINTING CONTRACT FOR VARIOUS AREAS ALUMINUM AIR VENT DETAIL		DES: (PRY 211)	
		SHT. 24 OF 27	
		eProject # 1358486	DIV. NO. A24

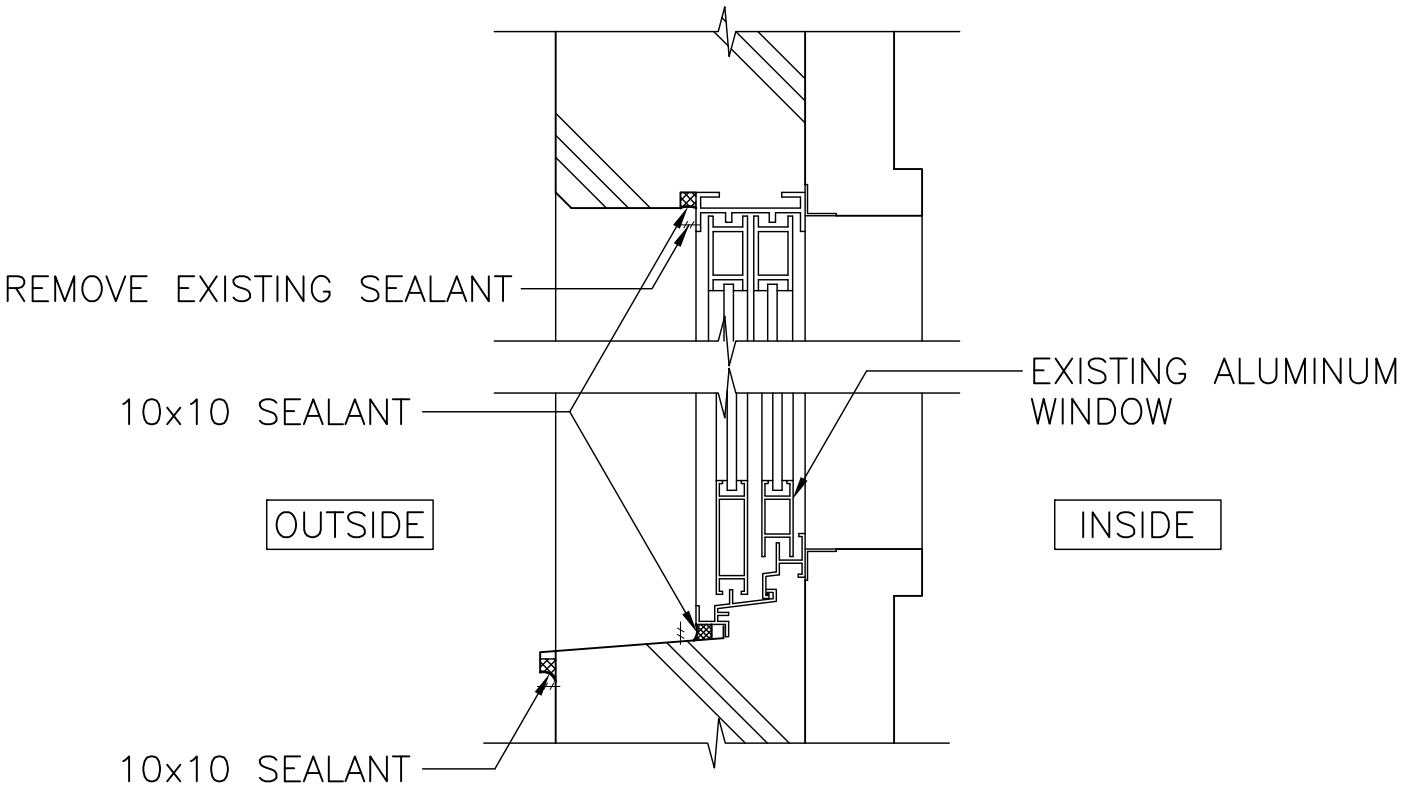

SEALANT FOR WINDOW/DOOR :

NOT TO SCALE :

ITEM NO. A034, B034, C034, D034 & E034

IDIQ EXTERIOR PAINTING CONTRACT FOR VARIOUS AREAS SEALANT FOR WINDOW/DOOR		DES: (PRY 211)	
		SHT. 25 OF 27	
		eProject # 1358486	DIV. NO. A25

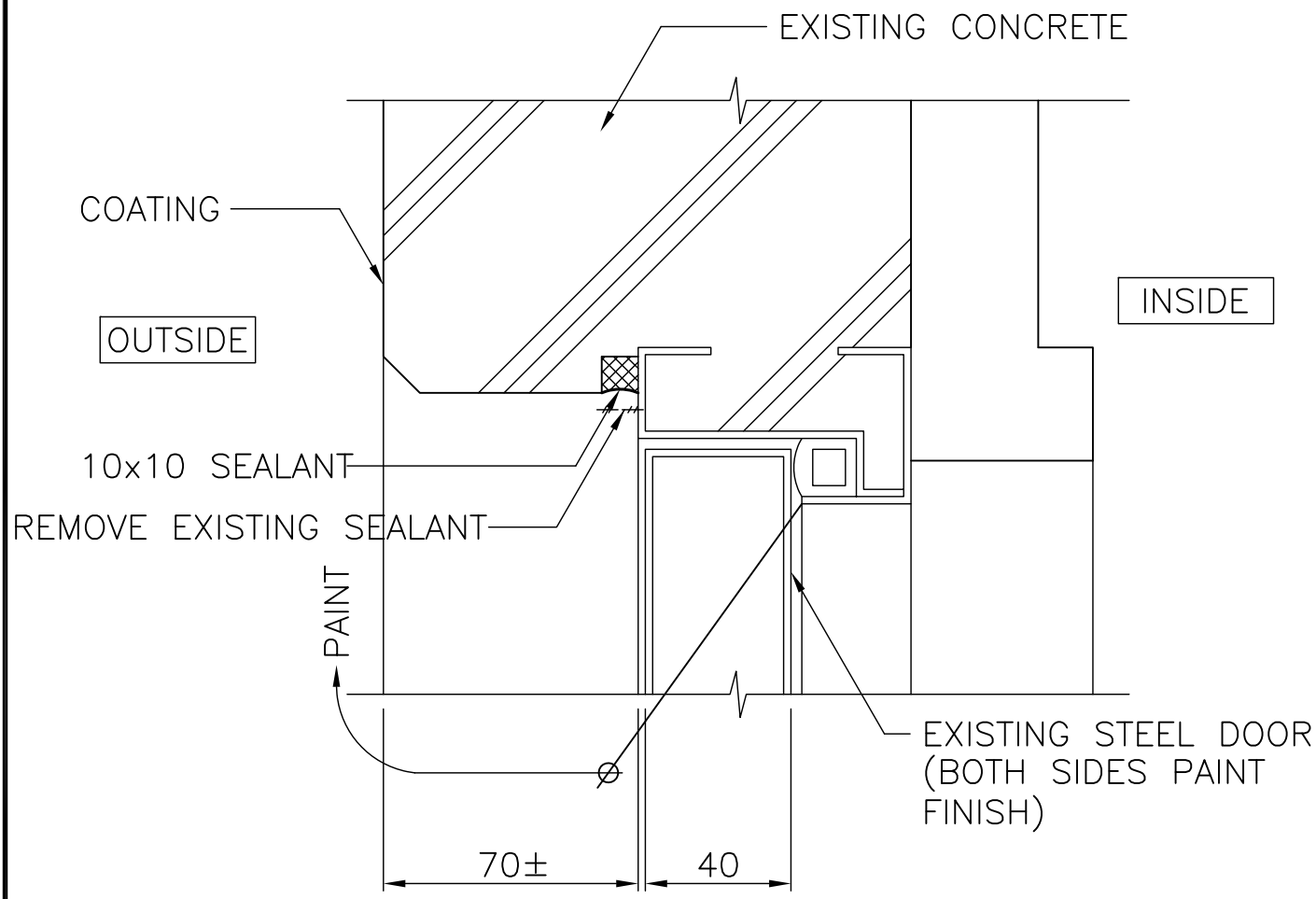

DOOR DETAIL :

NOT TO SCALE :

ITEM NO. A034, B034, C034, D034 & E034

IDIQ EXTERIOR PAINTING CONTRACT FOR VARIOUS AREAS DOOR DETAIL		DES: (PRY 211)	
		SHT. 26 OF 27	
		eProject # 1358486	DIV. NO. A26

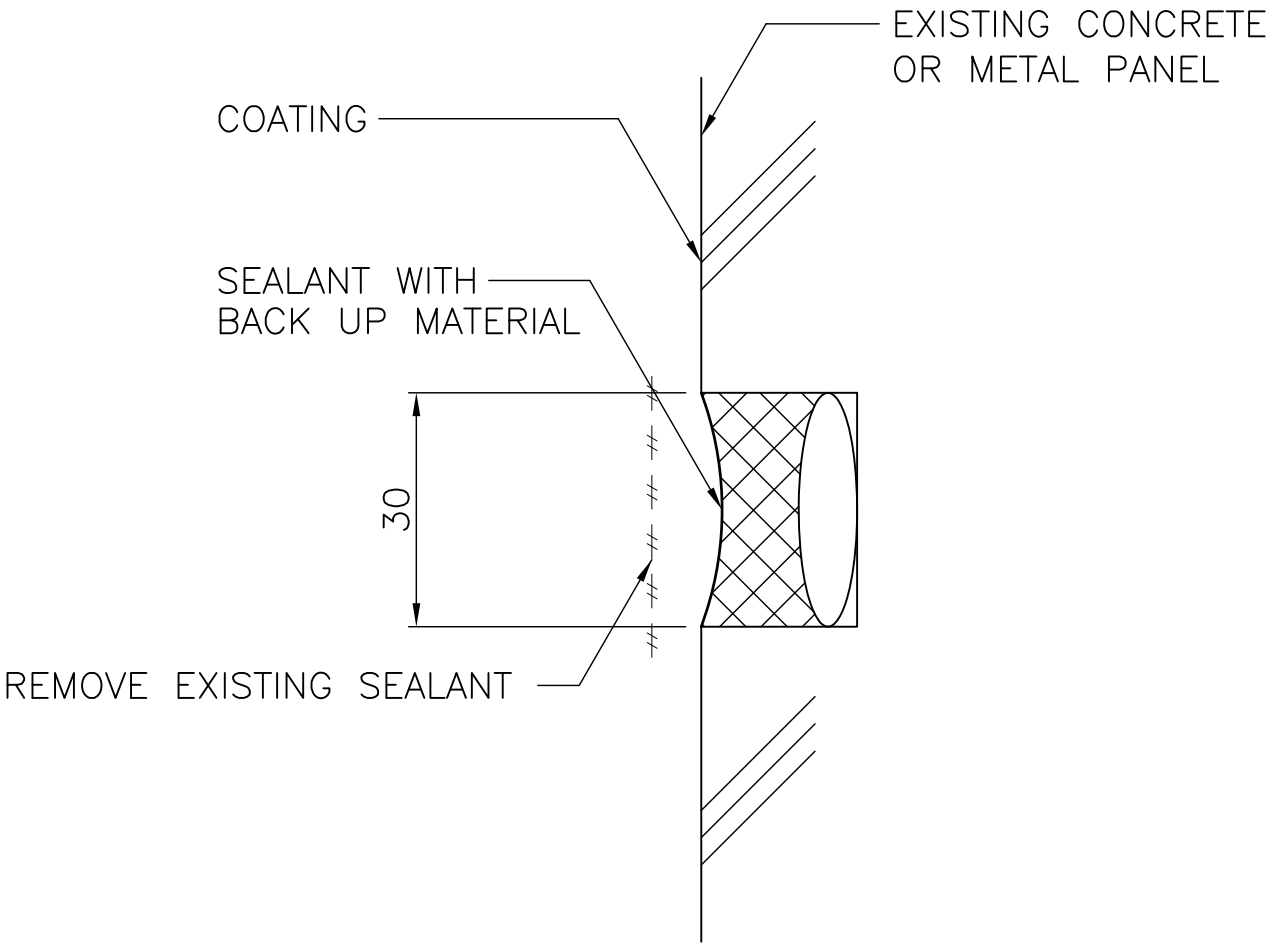

JOINT SEALANT DETAIL :

NOT TO SCALE :

ITEM NO. A035, B035, C035, D035 & E035

IDIQ EXTERIOR PAINTING CONTRACT FOR VARIOUS AREAS JOINT SEALANT DETAIL		DES: (PRY 211)	
		SHT. 27 OF 27	
		eProject # 1358486	DIV. NO. A27