| REVISIONS | | | |
|---|---|---|---|
| SYM | | DATE | APPROVED |
| | | | |
| | | | |

# CONSTRUCT SR-10 AHA

## MARINE CORPS BASE, CAMP LEJEUNE
## JACKSONVILLE, NORTH CAROLINA

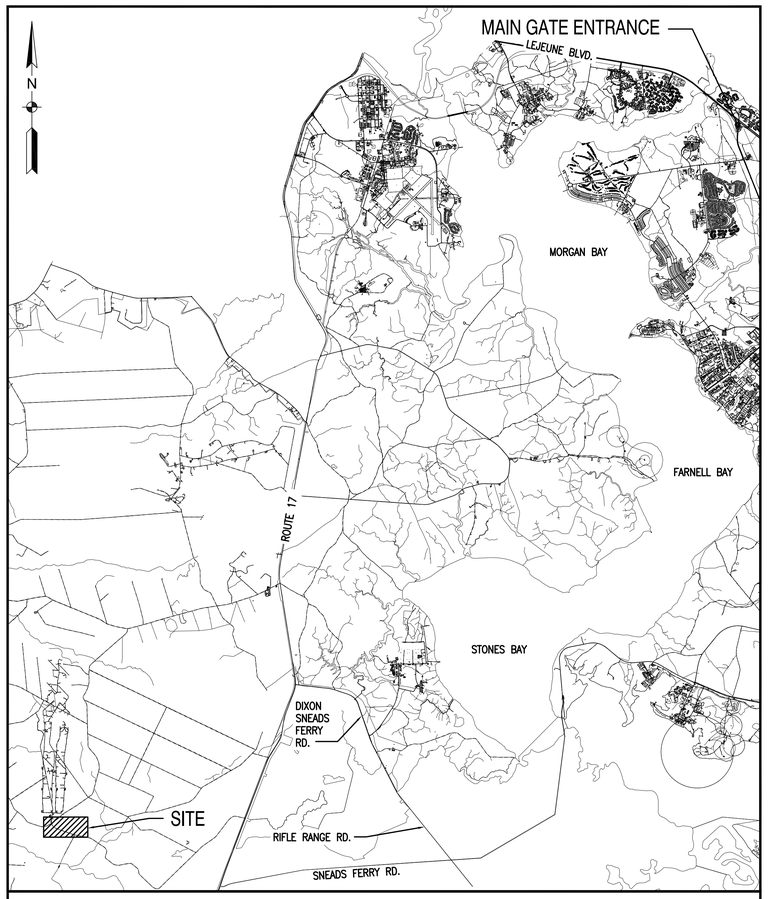


AREA MAP
NOT TO SCALE

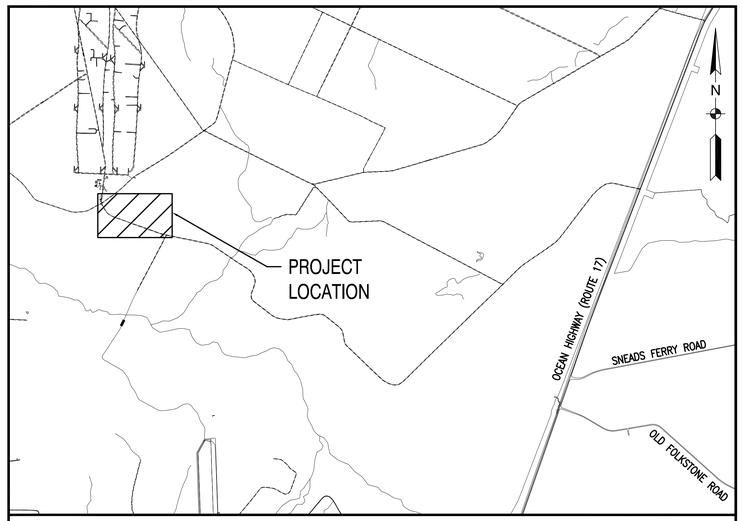


LOCATION MAP
1" = 2000'

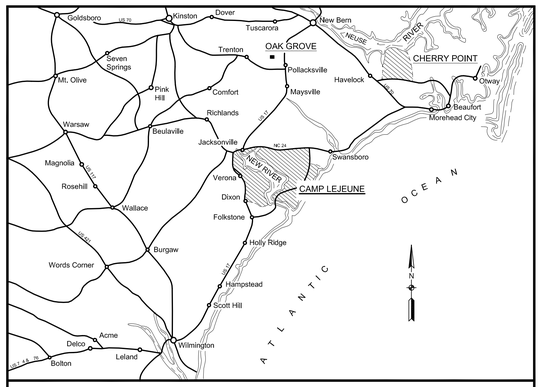


VICINITY MAP
NOT TO SCALE

| INDEX OF DRAWINGS | | |
|---|---|---|
| SHEET | TITLE | NAVFAC DWG. NO. |
| | GENERAL INFORMATION | |
| GI001 | TITLE SHEET / INDEX OF DRAWINGS | 60015531 |
| | | |
| | CIVIL | |
| CD001 | LEGEND, NOTES, & SCHEDULES | 60015532 |
| CD002 | KEY MAPS | 60015533 |
| CD101 | EXISTING CONDITIONS PLAN | 60015534 |
| CD102 | EXISTING CONDITIONS PLAN | 60015535 |
| CD103 | EXISTING CONDITIONS PLAN | 60015536 |
| CD104 | EXISTING CONDITIONS PLAN | 60015537 |
| CD105 | DEMOLITION / EROSION CONTROL PLAN | 60015538 |
| CS001 | OVERALL SITE IMPROVEMENT PLAN | 60015539 |
| CS101 | LAYOUT PLAN & SITE IMPROVEMENT NOTES | 60015540 |
| CG101 | EROSION CONTROL, GRADING AND DRAINAGE PLAN | 60015541 |
| CG301 | TYPICAL CROSS SECTION AND CONCRETE JOINTING PLAN | 60015542 |
| CG501 | EROSION CONTROL NOTES & DETAILS | 60015543 |
| CG502 | EROSION AND SEDIMENT CONTROL NOTES | 60015544 |
| CG503 | DETAILS | 60015545 |
| CG504 | DETAILS | 60015546 |
| CG505 | DETAILS | 60015547 |
| | | |
| | STRUCTURAL | |
| S-001 | GENERAL NOTES AND DETAILS | 60015548 |
| S-101 | PLAN AND SECTIONS | 60015549 |
| | | |
| | ELECTRICAL | |
| E-101 | SITE PLAN AND DETAILS | 60015550 |
| E-102 | DETAILS | 60015551 |

NORTH CAROLINA PROFESSIONAL SEAL SE-0502 ENGINEER C. ALLAN BAMFORTH, JR.
11/13/14

GI001

C. ALLAN BAMFORTH, JR.
ENGINEER-SURVEYOR, LTD.
NORFOLK, VIRGINIA

DES. CAB
DR. CAD
CHK. ALB
SUBMITTED BY:
DESIGN DIR.
APPROVED: PWO OR OICC DATE
SATISFACTORY TO: DATE

DEPARTMENT OF THE NAVY — NAVAL FACILITIES ENGINEERING COMMAND

MARINE CORPS BASE
CAMP LEJEUNE, NORTH CAROLINA

CONSTRUCT SR-10 AHA

TITLE SHEET / INDEX OF DRAWINGS

| SIZE | CODE IDENT. NO | NAVFAC DRAWING NO. |
|---|---|---|
| F | 80091 | 60015531 |
| | | CONST. CONTR. NO. N40085-15-B-0008 |

SCALE: NOTED | SPEC. 05-15-0008 | SHEET 1 OF 21

| REVISIONS | | | |
|---|---|---|---|
| SYM | | DATE | APPROVED |
| | | | |
| | | | |

## LEGEND:

| | EXISTING (E.) | NEW |
|---|---|---|
| SPOT ELEVATION | × 53.6 | 51.00 |
| CENTERLINE DITCH/SWALE | | |
| CONCRETE (CONC.) | CONC. | |
| CONTOUR | 50 | |
| EDGE OF WOODS | | |
| GRAVEL | GRAVEL | |
| SIGN | | |
| TOE OF SLOPE (T.O.S.) | T.O.S. | T.O.S. |
| TOP OF BANK (T.O.B.) | T.O.B. | T.O.B. |
| GUY WIRE | | |
| OVERHEAD (OH.) LINE | E. OH. LINE | |
| STORM (S.) SEWER | 12" E. S. | 24" S. |
| TELEPHONE (TEL.) PEDESTAL (PED.) | TEL. PED. | |
| UTILITY POLE | | |
| INVERT | INV. | |
| MATCH EXISTING GRADE | | M.E. |
| WETLANDS FLAG | 99▲ | |
| WITH | W/ | |

## EXISTING STORM SCHEDULE

| | |
|---|---|
| 001 | PIPE END (467) INV = 43.90 |
| 002 | PIPE END (468) INV = 44.19 |
| 003 | PIPE END (469) INV = 44.14 |
| 004 | PIPE END (470) INV = 43.91 |
| 005 | PIPE END (927) INV = 45.91 |
| 006 | PIPE END (928) INV = 46.48 |
| 007 | PIPE END (929) INV = 46.30 |
| 008 | PIPE END (930) INV = 45.69 |
| 009 | PIPE END (968) INV = 46.99 |
| 010 | PIPE END (969) INV = 46.85 |
| 011 | PIPE END (983) INV = 49.59 |
| 012 | PIPE END (984) INV = 49.69 |

## EXISTING UTILITY NOTE

A TELEPHONE PEDESTAL

## EXISTING SITE NOTE:

01 WITNESS POST

## SURVEY NOTES:

1. TOPOGRAPHIC SURVEY PREPARED BY C. ALLAN BAMFORTH, JR., ENGINEER– SURVEYOR LTD., DATED JUNE 2014.
2. THE EXISTENCE, SIZE AND/OR LOCATION OF UTILITIES ARE NOT GUARANTEED BY THIS SURVEY. UTILITIES SHOWN ARE BASED ON ABOVE GROUND STRUCTURES AND AVAILABLE UTILITY INFORMATION PROVIDED BY MCI EAST – MCB CAMP LEJEUNE REGIONAL GEOSPATIAL INFORMATION AND SERVICES DIVISION. THE CONTRACTOR SHALL FIELD VERIFY THE LOCATION OF ALL UTILITIES PRIOR TO CONSTRUCTION.
3. ELEVATIONS ARE IN FEET AND REFER TO NORTH AMERICAN VERTICAL DATUM (NAVD) 1988 AND ARE BASED ON CAMP LEJEUNE AND NORTH CAROLINA CONTROL, AND ESTABLISHED WITH GPS.
4. COORDINATES SHOWN REFER TO NORTH CAROLINA STATE PLANE COORDINATES (NAD 1983/2007) AND ARE BASED OFF CAMP LEJEUNE AND NORTH CAROLINA CONTROL AND ESTABLISHED WITH GPS.
5. TEMPORARY BENCH MARK (TBM) IS A RAILROAD SPIKE IN UTILITY POLE, AS INDICATED ON SHEET CD101, ELEV. = 50.20. RELOCATE TBM TO UNDISTURBED LOCATION PRIOR TO BEGINNING ANY DEMOLITION WORK.

NORTH CAROLINA PROFESSIONAL SEAL 5302 ENGINEER C. ALLAN BAMFORTH, JR.

11/13/14

CD001

C. ALLAN BAMFORTH, JR.
ENGINEER–SURVEYOR, LTD.
NORFOLK, VIRGINIA

DEPARTMENT OF THE NAVY — NAVAL FACILITIES ENGINEERING COMMAND

MARINE CORPS BASE
CAMP LEJEUNE, NORTH CAROLINA

DES. CAB
DR. CAD
CHK. ALB
SUBMITTED BY:
DESIGN DIR.
APPROVED: PWO OR OICC DATE
SATISFACTORY TO: DATE

CONSTRUCT SR-10 AHA

LEGEND, NOTES, & SCHEDULES

| SIZE | CODE IDENT. NO | NAVFAC DRAWING NO. |
|---|---|---|
| F | 80091 | 60015532 |
| | | CONST. CONTR. NO. N40085-15-B-0008 |

SCALE: NONE | SPEC. 05-15-0008 | SHEET 2 OF 21

| REVISIONS | | | |
|---|---|---|---|
| SYM | | DATE | APPROVED |
| | | | |
| | | | |

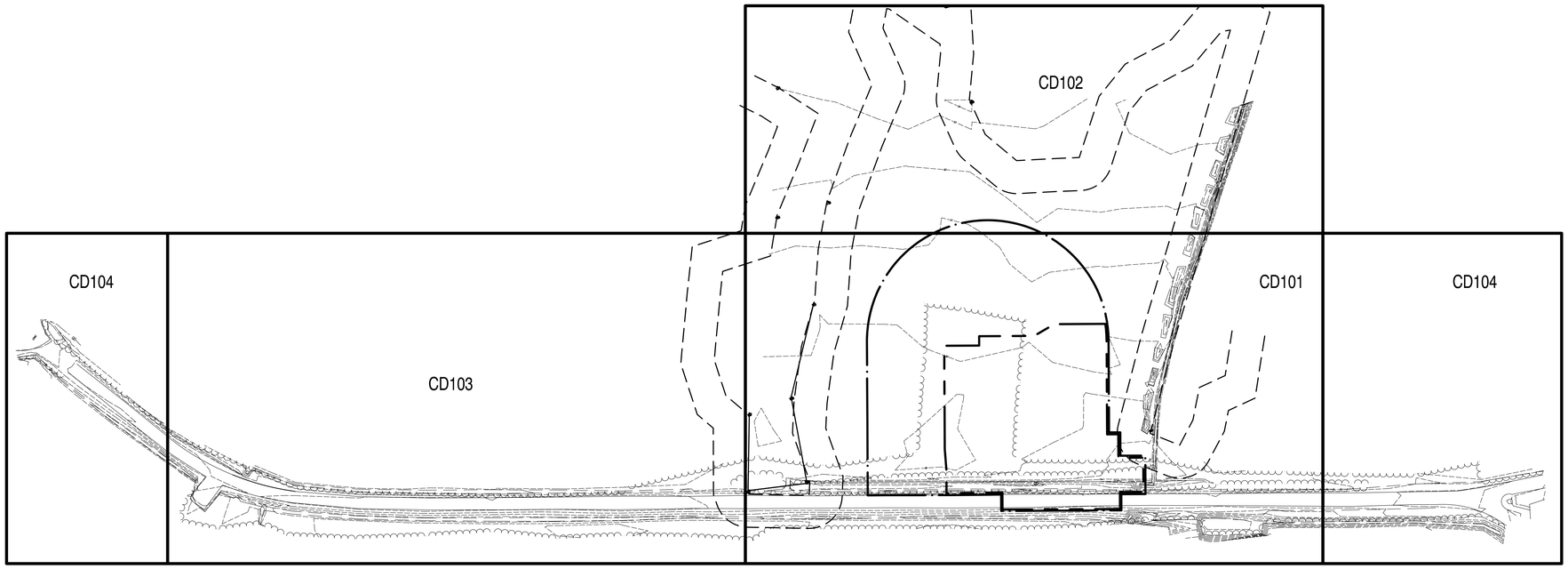


KEY MAP - EXISTING CONDITIONS

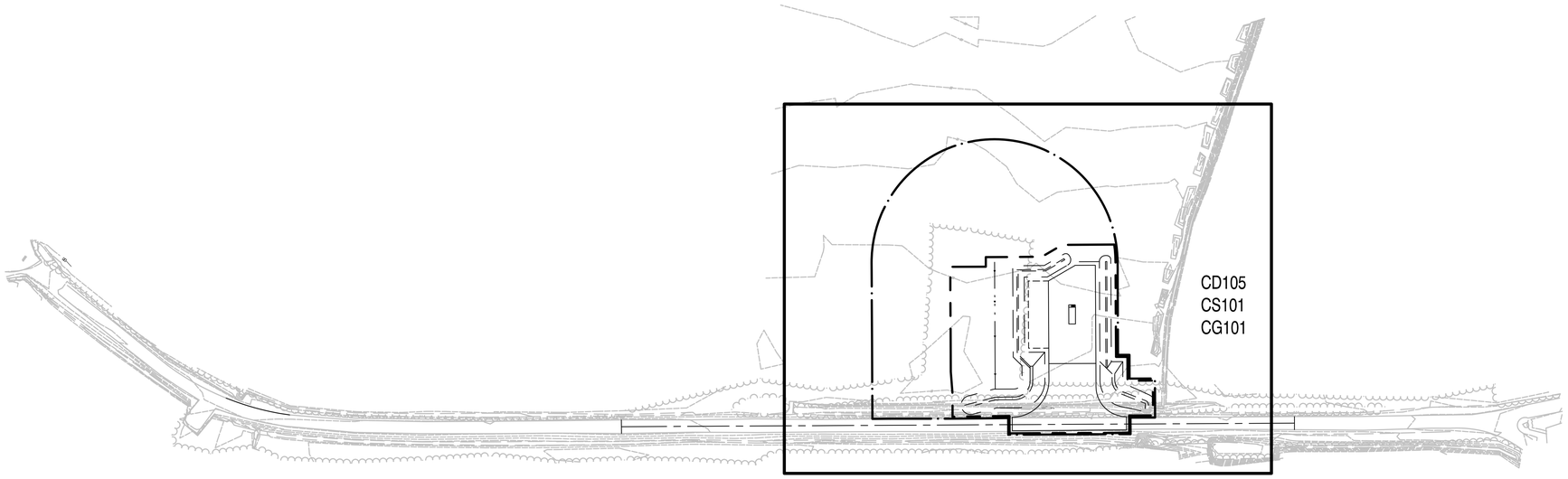


KEY MAP - DEMOLITION / EROSION CONTROL, LAYOUT, GRADING AND DRAINAGE PLAN

NORTH CAROLINA SPCS (NAD 1983/ 2007)

NORTH CAROLINA PROFESSIONAL SEAL 5302 ENGINEER C. ALLAN BAMFORTH, JR.

11/13/14

CD002

C. ALLAN BAMFORTH, JR.
ENGINEER–SURVEYOR, LTD.
NORFOLK, VIRGINIA

DEPARTMENT OF THE NAVY — NAVAL FACILITIES ENGINEERING COMMAND

MARINE CORPS BASE
CAMP LEJEUNE, NORTH CAROLINA

DES. CAB
DR. CAD
CHK. ALB
SUBMITTED BY:
DESIGN DIR.
APPROVED: PWO OR OICC — DATE
SATISFACTORY TO: — DATE

CONSTRUCT SR-10 AHA

KEY MAPS

| SIZE | CODE IDENT. NO | NAVFAC DRAWING NO. |
|---|---|---|
| F | 80091 | 60015533 |
| | | CONST. CONTR. NO. N40085-15-B-0008 |

SCALE: NONE — SPEC. 05-15-0008 — SHEET 3 OF 21

| REVISIONS | | | |
|---|---|---|---|
| SYM | | DATE | APPROVED |
| | | | |
| | | | |

MATCH LINE SHEET CD102

MATCH LINE SHEET CD103

MATCH LINE SHEET CD104

WETLAND LIMITS OBTAINED FROM CAMP LEJEUNE

WOODS

50' BUFFER OFF WETLANDS

CLEARED AREA

WETLAND LIMITS OBTAINED FROM CAMP LEJEUNE

50' BUFFER OFF WETLANDS

WETLAND LIMITS LOCATED IN FIELD

50' BUFFER OFF WETLANDS

WOODS

TBM ELEV. = 50.20

GRAVEL

WOODS

NORTH CAROLINA SPCS (NAD 1983/ 2007)

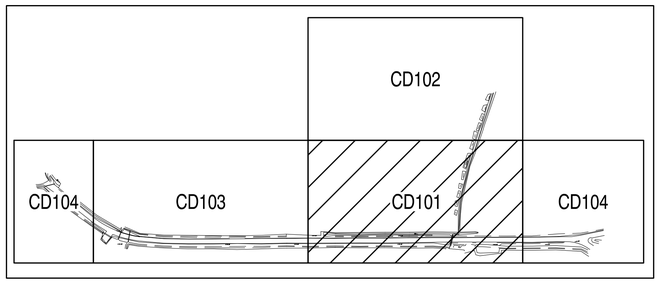


KEY PLAN

GRAPHIC SCALE

1" = 25'  0  25'  50'  75'  100'

NORTH CAROLINA PROFESSIONAL SEAL 5302 ENGINEER C. ALLAN BAMFORTH, JR.

11/13/14

# CD101

C. ALLAN BAMFORTH, JR.
ENGINEER–SURVEYOR, LTD.
NORFOLK, VIRGINIA

DEPARTMENT OF THE NAVY — NAVAL FACILITIES ENGINEERING COMMAND

MARINE CORPS BASE
CAMP LEJEUNE, NORTH CAROLINA

DES. CAB
DR. CAD
CHK. ALB
SUBMITTED BY:
DESIGN DIR.
APPROVED: PWO OR OICC — DATE
SATISFACTORY TO: — DATE

## CONSTRUCT SR-10 AHA

EXISTING CONDITIONS PLAN

| SIZE | CODE IDENT. NO | NAVFAC DRAWING NO. |
|---|---|---|
| F | 80091 | 60015534 |
| | | CONST. CONTR. NO. N40085-15-B-0008 |

SCALE: GRAPHIC — SPEC. 05-15-0008 — SHEET 4 OF 21

| REVISIONS | | | |
|---|---|---|---|
| SYM | | DATE | APPROVED |
| | | | |
| | | | |

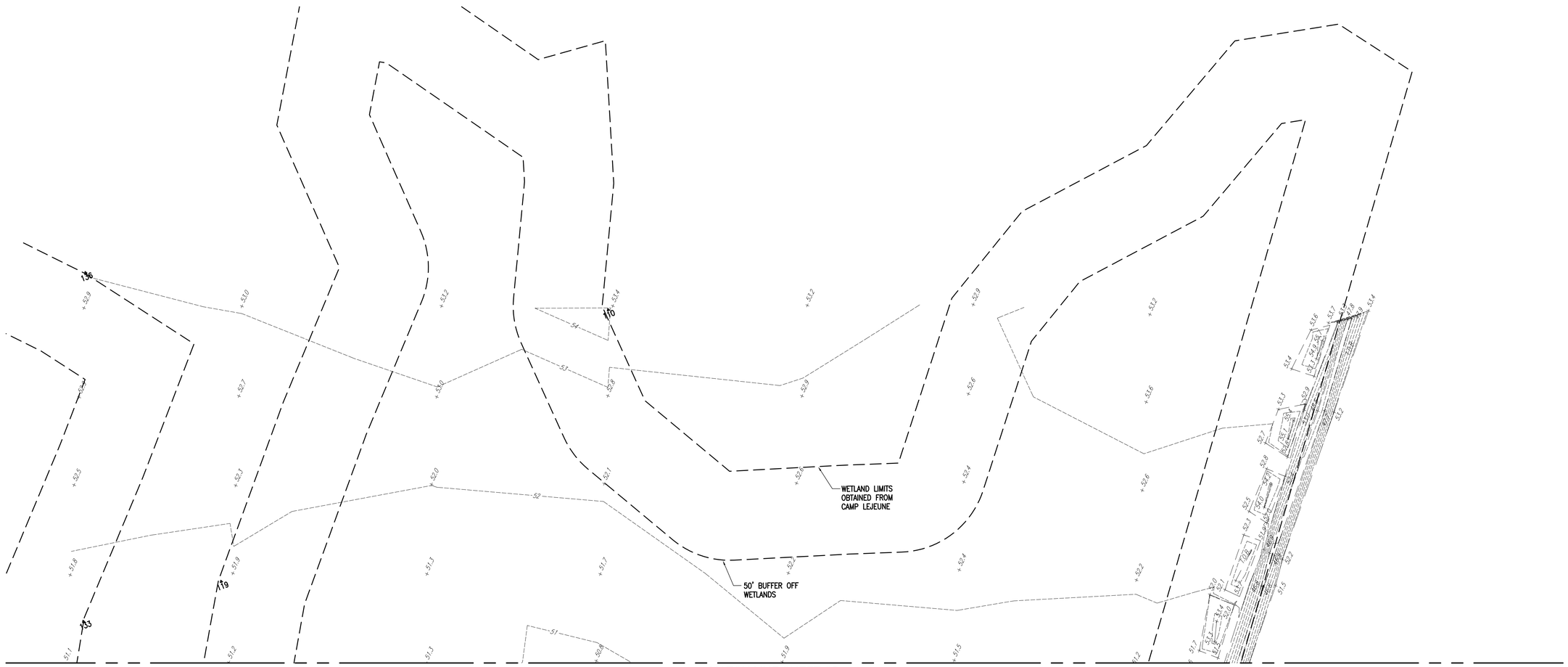


MATCH LINE SHEET CD101

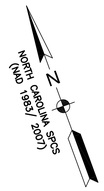


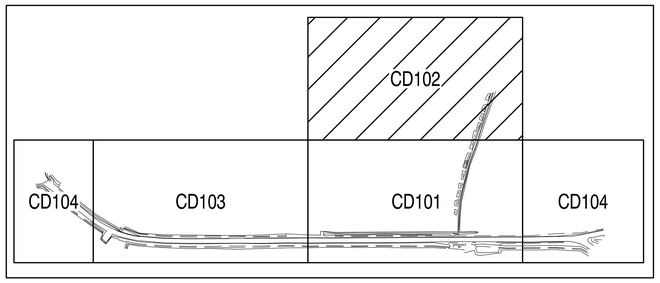


KEY PLAN

GRAPHIC SCALE

1" = 25'  0  25'  50'  75'  100'

NORTH CAROLINA PROFESSIONAL SEAL SURVEYOR 5302 ENGINEER

11/13/14

CD102

C. ALLAN BAMFORTH, JR.
ENGINEER-SURVEYOR, LTD.
NORFOLK, VIRGINIA

DEPARTMENT OF THE NAVY — NAVAL FACILITIES ENGINEERING COMMAND

MARINE CORPS BASE
CAMP LEJEUNE, NORTH CAROLINA

DES. CAB
DR. CAD
CHK. ALB
SUBMITTED BY:
DESIGN DIR.
APPROVED: PWO OR OICC — DATE
SATISFACTORY TO: — DATE

CONSTRUCT SR-10 AHA

EXISTING CONDITIONS PLAN

| SIZE | CODE IDENT. NO | NAVFAC DRAWING NO. |
|---|---|---|
| F | 80091 | 60015535 |
| | | CONST. CONTR. NO. N40085-15-B-0008 |

SCALE: GRAPHIC — SPEC. 05-15-0008 — SHEET 5 OF 21

| REVISIONS | | | |
|---|---|---|---|
| SYM | | DATE | APPROVED |
| | | | |
| | | | |

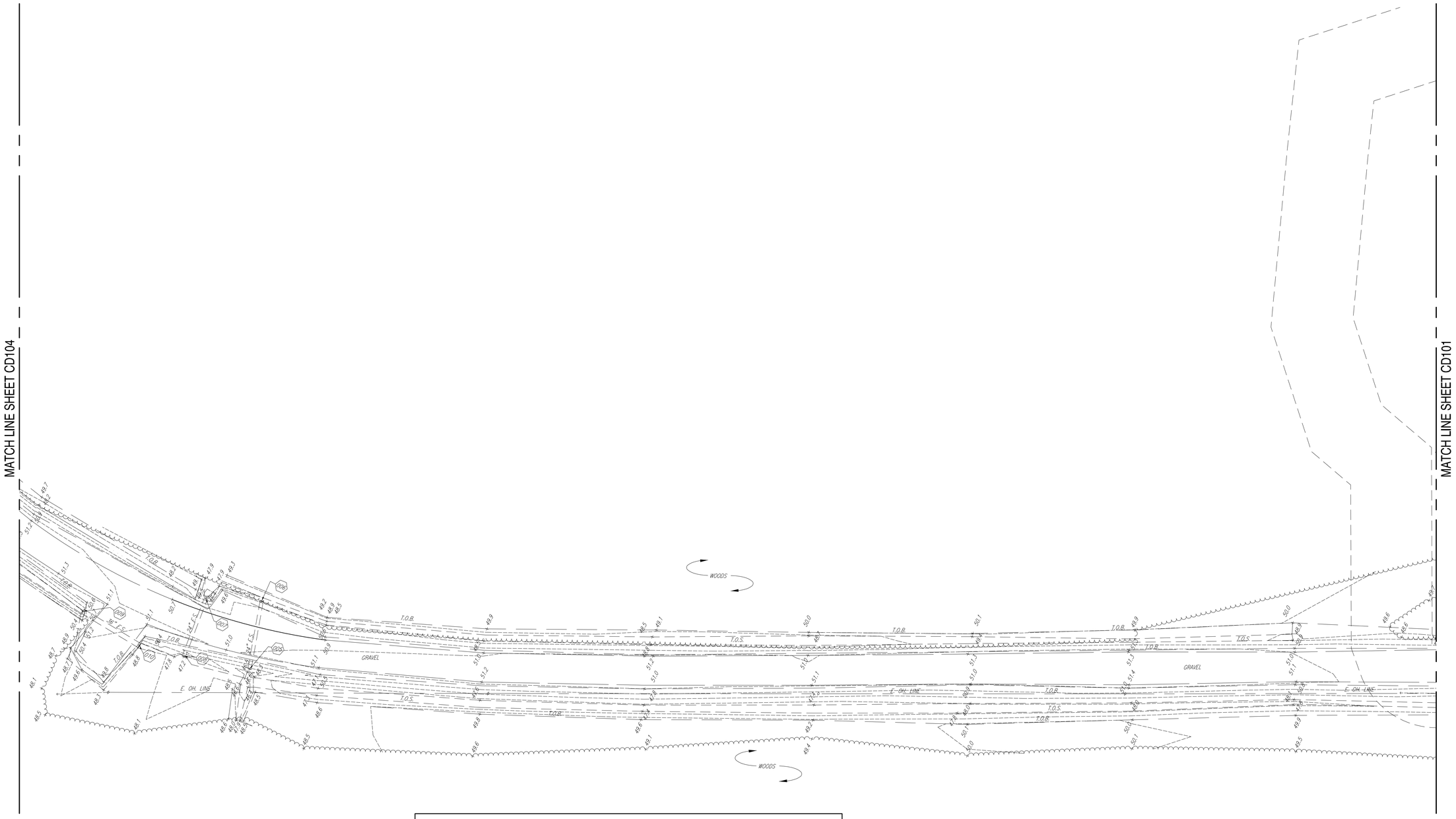


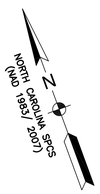


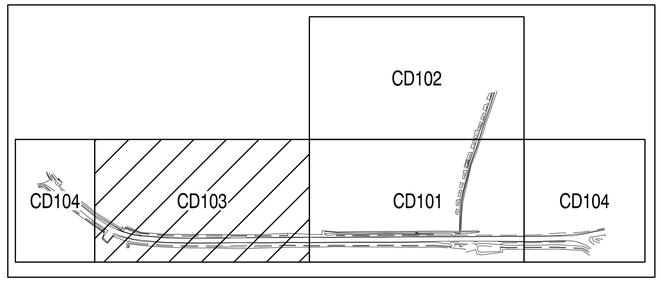


KEY PLAN

GRAPHIC SCALE

1" = 25'  0  25'  50'  75'  100'

NORTH CAROLINA PROFESSIONAL SEAL 202 ENGINEER C. ALLAN BAMFORTH, JR.

11/13/14

# CD103

C. ALLAN BAMFORTH, JR.
ENGINEER-SURVEYOR, LTD.
NORFOLK, VIRGINIA

DEPARTMENT OF THE NAVY — NAVAL FACILITIES ENGINEERING COMMAND

MARINE CORPS BASE
CAMP LEJEUNE, NORTH CAROLINA

DES. CAB
DR. CAD
CHK. ALB
SUBMITTED BY:
DESIGN DIR.
APPROVED: PWO OR OICC — DATE
SATISFACTORY TO: — DATE

CONSTRUCT SR-10 AHA

EXISTING CONDITIONS PLAN

| SIZE | CODE IDENT. NO | NAVFAC DRAWING NO. |
|---|---|---|
| F | 80091 | 60015536 |

CONST. CONTR. NO. N40085-15-B-0008

SCALE: GRAPHIC | SPEC. 05-15-0008 | SHEET 6 OF 21

| REVISIONS | | | |
|---|---|---|---|
| SYM | | DATE | APPROVED |
| | | | |
| | | | |

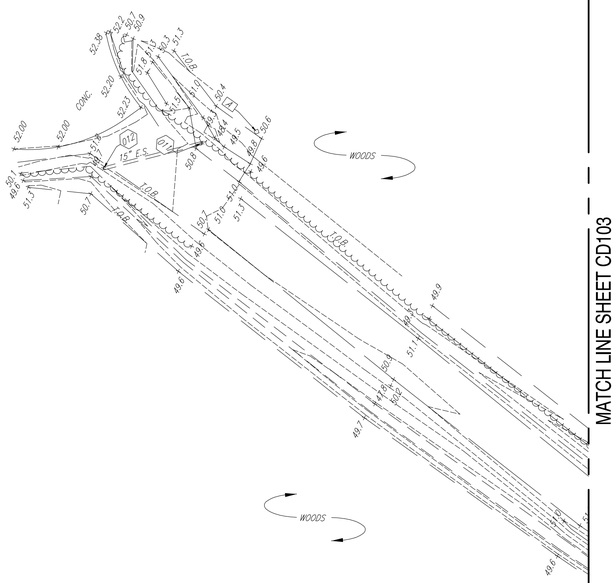


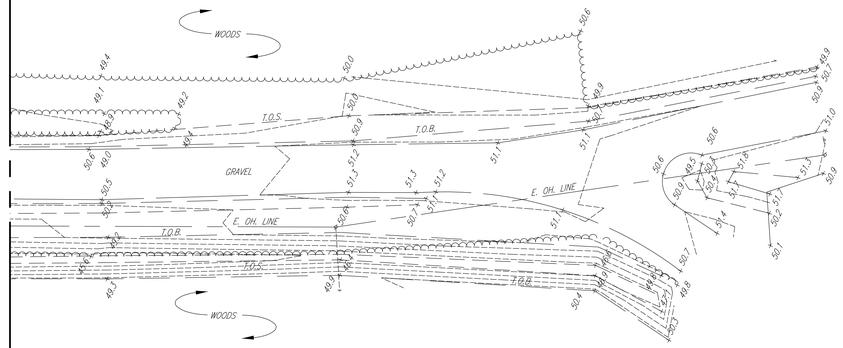


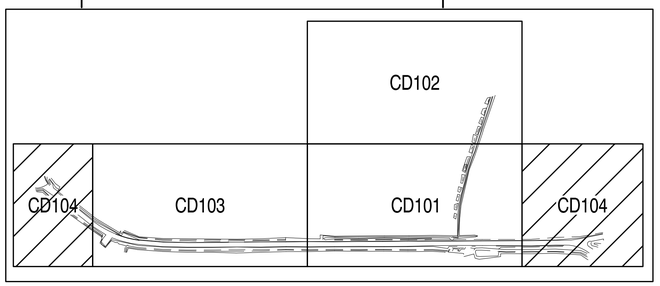


KEY PLAN

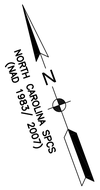


GRAPHIC SCALE

1" = 25'  0  25'  50'  75'  100'

NORTH CAROLINA PROFESSIONAL SEAL L-2302 ENGINEER C. ALLAN BAMFORTH, JR.

11/13/14

# CD104

C. ALLAN BAMFORTH, JR.
ENGINEER–SURVEYOR, LTD.
NORFOLK, VIRGINIA

DEPARTMENT OF THE NAVY — NAVAL FACILITIES ENGINEERING COMMAND

MARINE CORPS BASE
CAMP LEJEUNE, NORTH CAROLINA

DES. CAB
DR. CAD
CHK. ALB
SUBMITTED BY:
DESIGN DIR.
APPROVED: PWO OR OICC — DATE
SATISFACTORY TO: — DATE

CONSTRUCT SR-10 AHA

EXISTING CONDITIONS PLAN

| SIZE | CODE IDENT. NO | NAVFAC DRAWING NO. |
|---|---|---|
| F | 80091 | 60015537 |
| | | CONST. CONTR. NO. N40085-15-B-0008 |

SCALE: GRAPHIC — SPEC. 05-15-0008 — SHEET 7 OF 21

| REVISIONS | | | |
|---|---|---|---|
| SYM | | DATE | APPROVED |
| | | | |
| | | | |

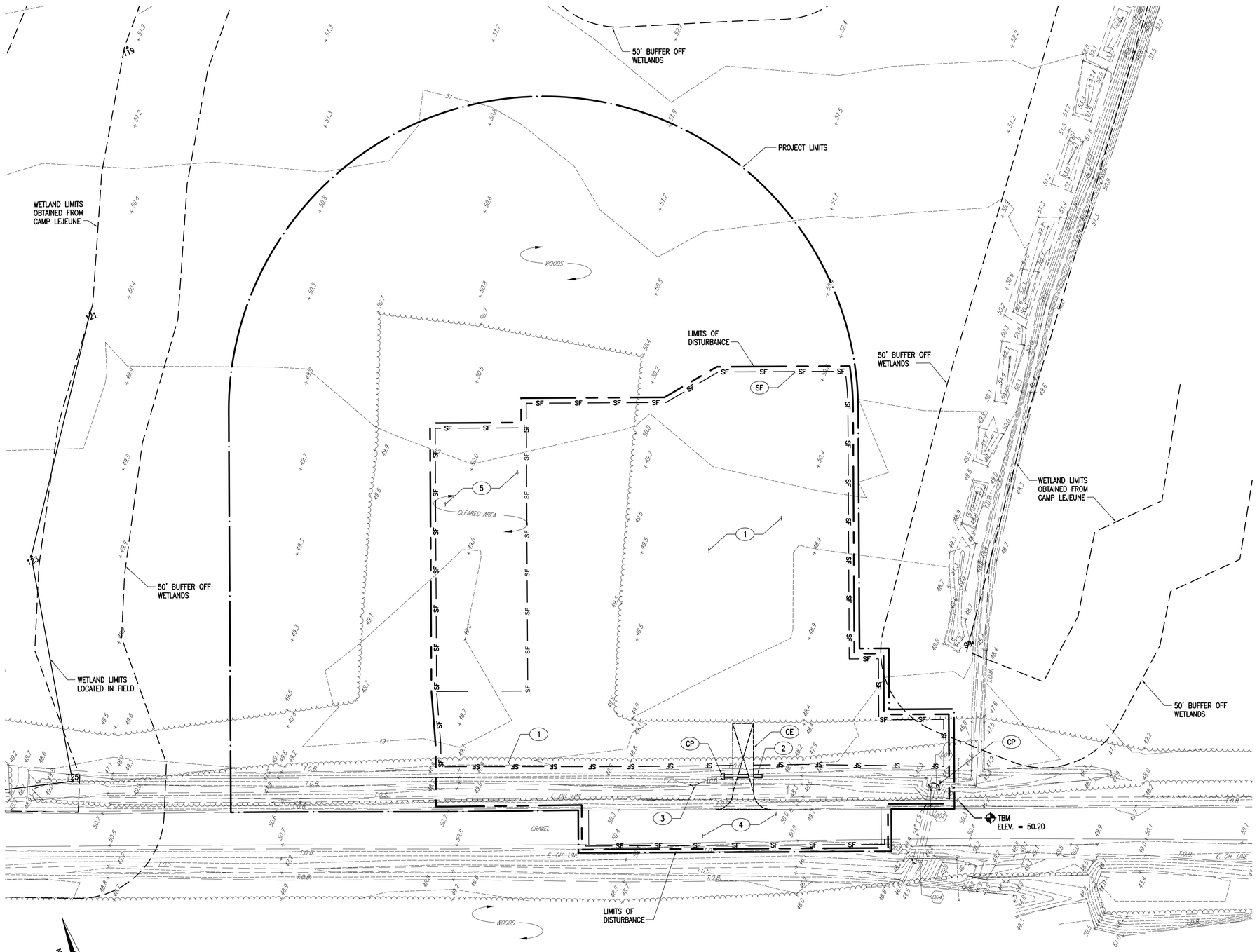


## DEMOLITION NOTES:

1. CLEAR AND GRUB WITHIN LIMITS OF DISTURBANCE.
2. TEMPORARY 24 INCH CULVERT (LAY IN EXISTING DITCH)
3. RELOCATE EXISTING WITNESS POST AND TELEPHONE PEDESTAL. RELOCATE TO THE WEST, 15' OFF THE PAVEMENT AND IN THE SHOULDER. THE CONTRACTOR SHALL BE RESPONSIBLE FOR RELOCATION OF THE ITEMS, INCLUDING COORDINATING WITH UTILITY PROVIDER.
4. REMOVE GRAVEL PAVEMENT TO DEPTH REQUIRED TO PROVIDE NEW WORK.
5. TEMPORARY STOCKPILE AREA FOR SOIL DURING CONSTRUCTION.

## SITE PREPARATION NOTE:

THE SITE CONSISTS OF SURFACE SOILS CONTAINING RELATIVELY HIGH AMOUNTS OF ORGANICS AND FINE GRAINED MATERIAL, MOIST TO SATURATED, WITH WATER OCCURRING AS CLOSE AS 14 INCHES TO THE SURFACE. SEE SPECIFICATION SECTION "EXCAVATION AND FILL" FOR SITE CONDITION INFORMATION AND SITE PREPARATION REQUIREMENTS.

## EROSION & SEDIMENT CONTROL MEASURES

- SF TEMPORARY SEDIMENT FENCE (SEE SHEET CG501)
- CP CULVERT PROTECTION (SEE SHEET CG501)
- CE TEMPORARY CONSTRUCTION ENTRANCE (SEE SHEET CG501)

GRAPHIC SCALE

1" = 25' 0 25' 50' 75' 100'

NORTH CAROLINA PROFESSIONAL SEAL 5302 ENGINEER C. ALLAN BAMFORTH, JR.

11/13/14

CD105

C. ALLAN BAMFORTH, JR.
ENGINEER-SURVEYOR, LTD.
NORFOLK, VIRGINIA

DEPARTMENT OF THE NAVY — NAVAL FACILITIES ENGINEERING COMMAND

MARINE CORPS BASE
CAMP LEJEUNE, NORTH CAROLINA

DES. CAB
DR. CAD
CHK. ALB
SUBMITTED BY:
DESIGN DIR.
APPROVED: PWO OR OICC DATE
SATISFACTORY TO: DATE

CONSTRUCT SR-10 AHA

DEMOLITION/ EROSION CONTROL PLAN

| SIZE | CODE IDENT. NO | NAVFAC DRAWING NO. |
|---|---|---|
| F | 80091 | 60015538 |
| | | CONST. CONTR. NO. N40085-15-B-0008 |
| SCALE: GRAPHIC | SPEC. 05-15-0008 | SHEET 8 OF 21 |

| REVISIONS | | | |
|---|---|---|---|
| SYM | | DATE | APPROVED |
| | | | |
| | | | |

## NEW WORK NOTE:

3 DOUBLE LEAF SECURITY BARRIER GATE (SEE SHEET CG505)
SEE EXPLOSIVE ARC GATE LAYOUT THIS SHEET.

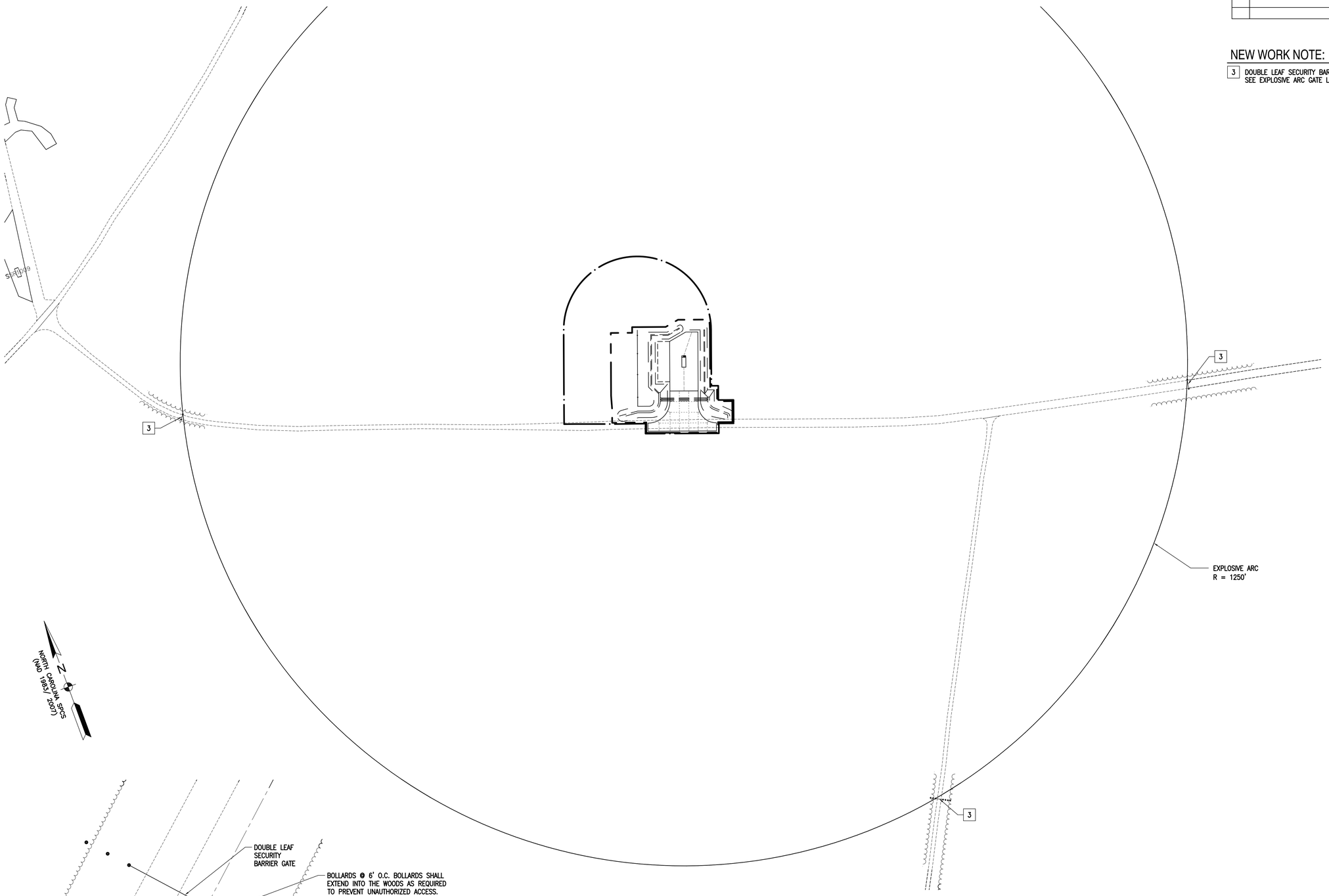


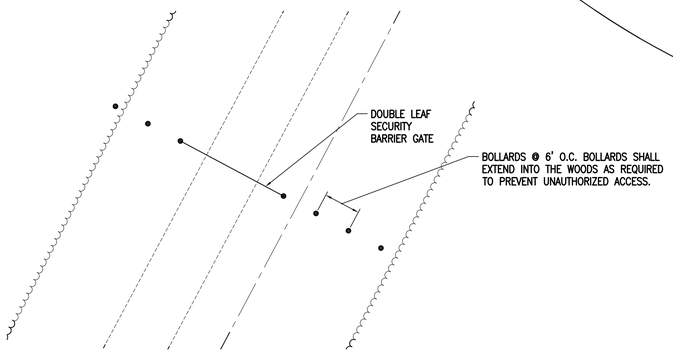


## EXPLOSIVE ARC GATE

N.T.S

## GRAPHIC SCALE

1" = 100'  0  100'  200'  300'  400'

NORTH CAROLINA PROFESSIONAL SEAL C-2302 ENGINEER C. ALLAN BAMFORTH, JR.

11/13/14

# CS001

C. ALLAN BAMFORTH, JR.
ENGINEER–SURVEYOR, LTD.
NORFOLK, VIRGINIA

DEPARTMENT OF THE NAVY — NAVAL FACILITIES ENGINEERING COMMAND

MARINE CORPS BASE
CAMP LEJEUNE, NORTH CAROLINA

DES. CAB
DR. CAD
CHK. ALB
SUBMITTED BY:
DESIGN DIR.
APPROVED: PWO OR OICC — DATE
SATISFACTORY TO: — DATE

CONSTRUCT SR-10 AHA

OVERALL SITE IMPROVEMENT PLAN

| SIZE | CODE IDENT. NO | NAVFAC DRAWING NO. |
|---|---|---|
| F | 80091 | 60015539 |
| | | CONST. CONTR. NO. N40085-15-B-0008 |

SCALE: GRAPHIC — SPEC. 05-15-0008 — SHEET 9 OF 21

| REVISIONS | | | |
|---|---|---|---|
| SYM | | DATE | APPROVED |
| | | | |
| | | | |

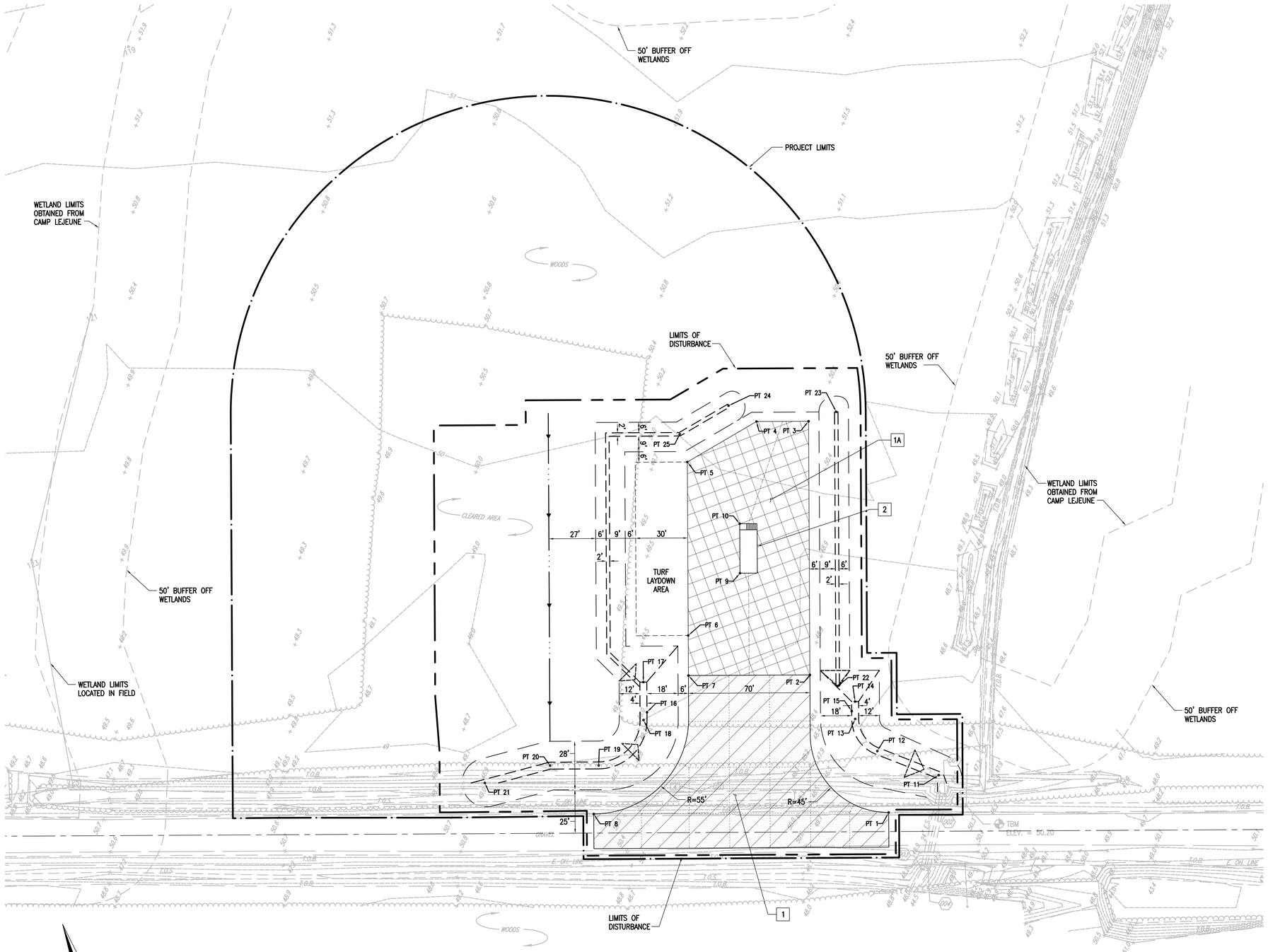


## NOTES:

1. PCC PAVEMENT AREA (SEE SHEET CG504)
1A. GRAVEL PAVEMENT AREA. (SEE SHEET CG504)
2. RAISED REINFORCED CONCRETE LOADING PAD (SEE STRUCTURAL DRAWINGS)

## LAYOUT POINTS

| POINT # | DESCRIPTION | NORTHING | EASTING |
|---|---|---|---|
| 1 | PT 1 | 295524.34 | 2436818.03 |
| 2 | PT 2 | 295614.39 | 2436802.68 |
| 3 | PT 3 | 295751.90 | 2436852.30 |
| 4 | PT 4 | 295762.08 | 2436824.08 |
| 5 | PT 5 | 295753.94 | 2436778.61 |
| 6 | PT 6 | 295659.87 | 2436744.67 |
| 7 | PT 7 | 295638.15 | 2436736.84 |
| 8 | PT 8 | 295582.03 | 2436658.12 |
| 9 | PT 9 | 295683.32 | 2436785.03 |
| 10 | PT 10 | 295710.13 | 2436794.70 |
| 11 | PT 11 | 295534.63 | 2436852.53 |
| 12 | PT 12 | 295559.81 | 2436824.05 |
| 13 | PT 13 | 295581.58 | 2436818.48 |
| 14 | PT 14 | 295590.99 | 2436821.88 |
| 15 | PT 15 | 295586.49 | 2436818.13 |
| 16 | PT 16 | 295626.54 | 2436707.13 |
| 17 | PT 17 | 295643.55 | 2436711.15 |
| 18 | PT 18 | 295622.99 | 2436703.72 |
| 19 | PT 19 | 295607.35 | 2436670.44 |
| 20 | PT 20 | 295616.86 | 2436644.10 |
| 21 | PT 21 | 295620.46 | 2436605.37 |
| 22 | PT 22 | 295602.85 | 2436815.52 |
| 23 | PT 23 | 295751.47 | 2436869.15 |
| 24 | PT 24 | 295776.19 | 2436812.08 |
| 25 | PT 25 | 295770.44 | 2436780.01 |

## LOW DENSITY SITE DATA:

PROJECT LIMITS = 145,912 SF

AMMO DECK AND ENTRANCE AREA = 19,820 SF

IMPERVIOUS AREA (PERCENT) = 14%

MAXIMUM ALLOWABLE IMPERVIOUS AREA (PERCENT) = 24%

FUTURE IMPERVIOUS AREA = 15,198 SF

FUTURE IMPERVIOUS AREA (PERCENT) = 24%

GRAPHIC SCALE

1" = 25' 0 25' 50' 75' 100'

NORTH CAROLINA PROFESSIONAL SEAL ENGINEER C. ALLAN BAMFORTH, JR. SEAL 022302

11/13/14

CS101

C. ALLAN BAMFORTH, JR.
ENGINEER-SURVEYOR, LTD.
NORFOLK, VIRGINIA

DEPARTMENT OF THE NAVY — NAVAL FACILITIES ENGINEERING COMMAND

MARINE CORPS BASE
CAMP LEJEUNE, NORTH CAROLINA

DES. CAB
DR. CAD
CHK. ALB
SUBMITTED BY:
DESIGN DIR.
APPROVED: PWO OR OICC DATE
SATISFACTORY TO: DATE

CONSTRUCT SR-10 AHA

LAYOUT PLAN & SITE IMPROVEMENT NOTES

| SIZE | CODE IDENT. NO | NAVFAC DRAWING NO. |
|---|---|---|
| F | 80091 | 60015540 |

CONST. CONTR. NO. N40085-15-B-0008

SCALE: GRAPHIC | SPEC. 05-15-0008 | SHEET 10 OF 21

| REVISIONS | | | |
|---|---|---|---|
| SYM | | DATE | APPROVED |
| | | | |
| | | | |

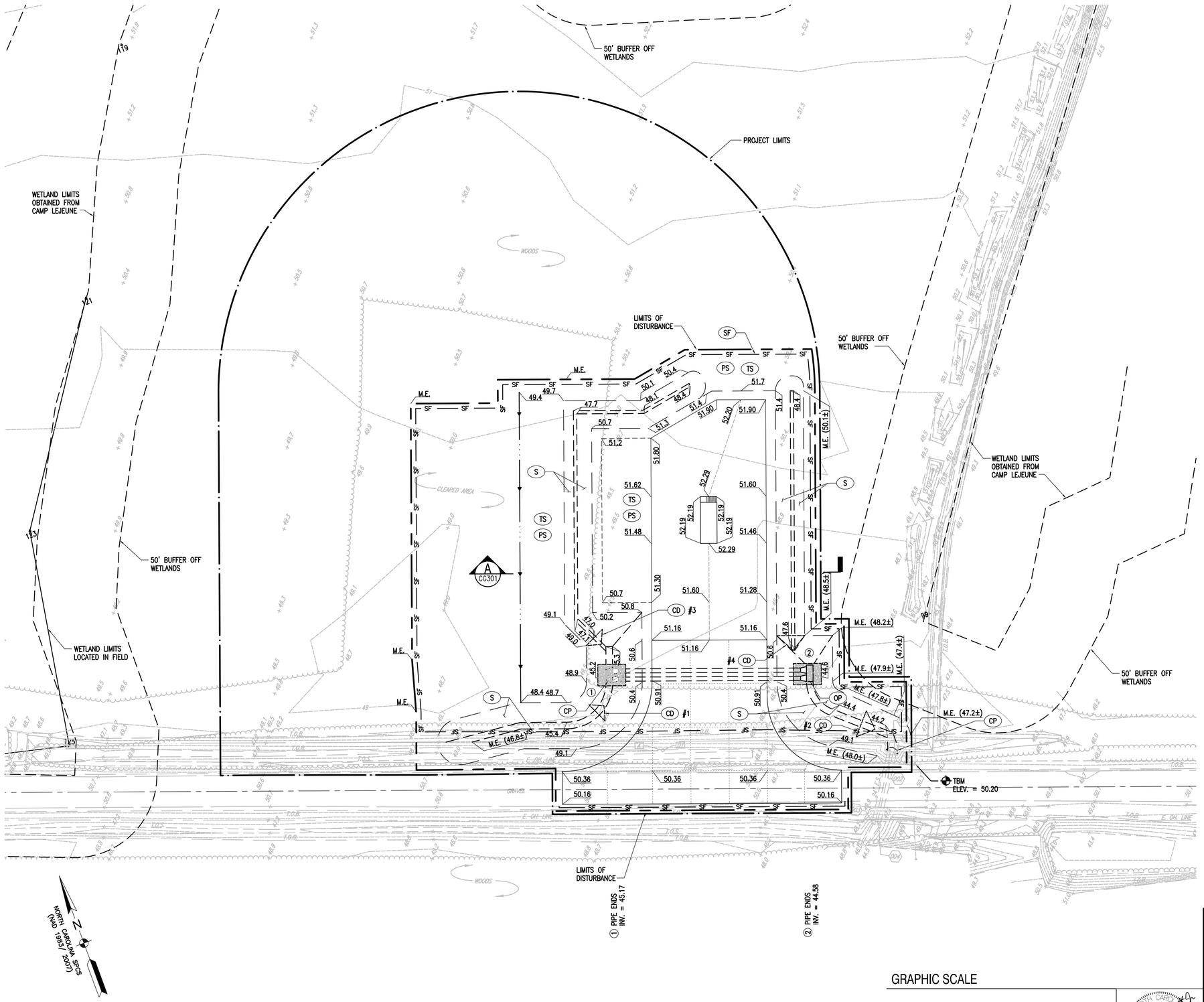


## EROSION & SEDIMENT CONTROL MEASURES

- (SF) TEMPORARY SEDIMENT FENCE (SEE SHEET CG501)
- (CD) CHECK DAM (SEE SHEET CG501)
- (OP) RIPRAP OUTLET PROTECTION (SEE SHEET CG501)
- (CP) CULVERT PROTECTION (SEE SHEET CG501)
- (TS) TEMPORARY SEEDING
- (PS) PERMANENT SEEDING
- (S) SODDING

## STORM PIPE DATA

① – ② 118' – DOUBLE 24" S. @ 0.50% ✱

✱ ALL STORM PIPE TO BE RCP, CLASS V.

## NOTES:

1. ALL FINISHED SURFACES WITHIN LIMITS OF DISTURBANCE NOT COVERED BY GRAVEL OR PCC PAVEMENT SHALL RECEIVE TOPSOIL AND SEED, UNLESS INDICATED TO RECEIVE SOD.
2. ALL DITCH BOTTOMS AND SIDE SLOPES TO BE SODDED.
3. PROVIDE FLARED END SECTIONS FOR PIPE. SEE DETAIL SHEET CG505.

GRAPHIC SCALE

1" = 25'  0  25'  50'  75'  100'

NORTH CAROLINA PROFESSIONAL SEAL 002 ENGINEER C. ALLAN BAMFORTH, JR.
11/13/14

CG101

C. ALLAN BAMFORTH, JR.
ENGINEER–SURVEYOR, LTD.
NORFOLK, VIRGINIA

DEPARTMENT OF THE NAVY — NAVAL FACILITIES ENGINEERING COMMAND

MARINE CORPS BASE
CAMP LEJEUNE, NORTH CAROLINA

DES. CAB
DR. CAD
CHK. ALB
SUBMITTED BY:
DESIGN DIR.
APPROVED: PWO OR OICC — DATE
SATISFACTORY TO: — DATE

CONSTRUCT SR-10 AHA

EROSION CONTROL, GRADING AND DRAINAGE PLAN

| SIZE | CODE IDENT. NO | NAVFAC DRAWING NO. |
|---|---|---|
| F | 80091 | 60015541 |

CONST. CONTR. NO. N40085-15-B-0008

SCALE: GRAPHIC  SPEC. 05-15-0008  SHEET 11 OF 21

| REVISIONS | | | |
|---|---|---|---|
| SYM | | DATE | APPROVED |
| | | | |
| | | | |

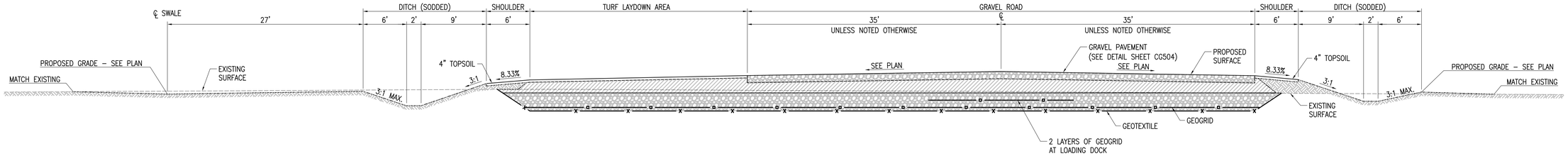


## A TYPICAL ROAD CROSS SECTION

N.T.S.

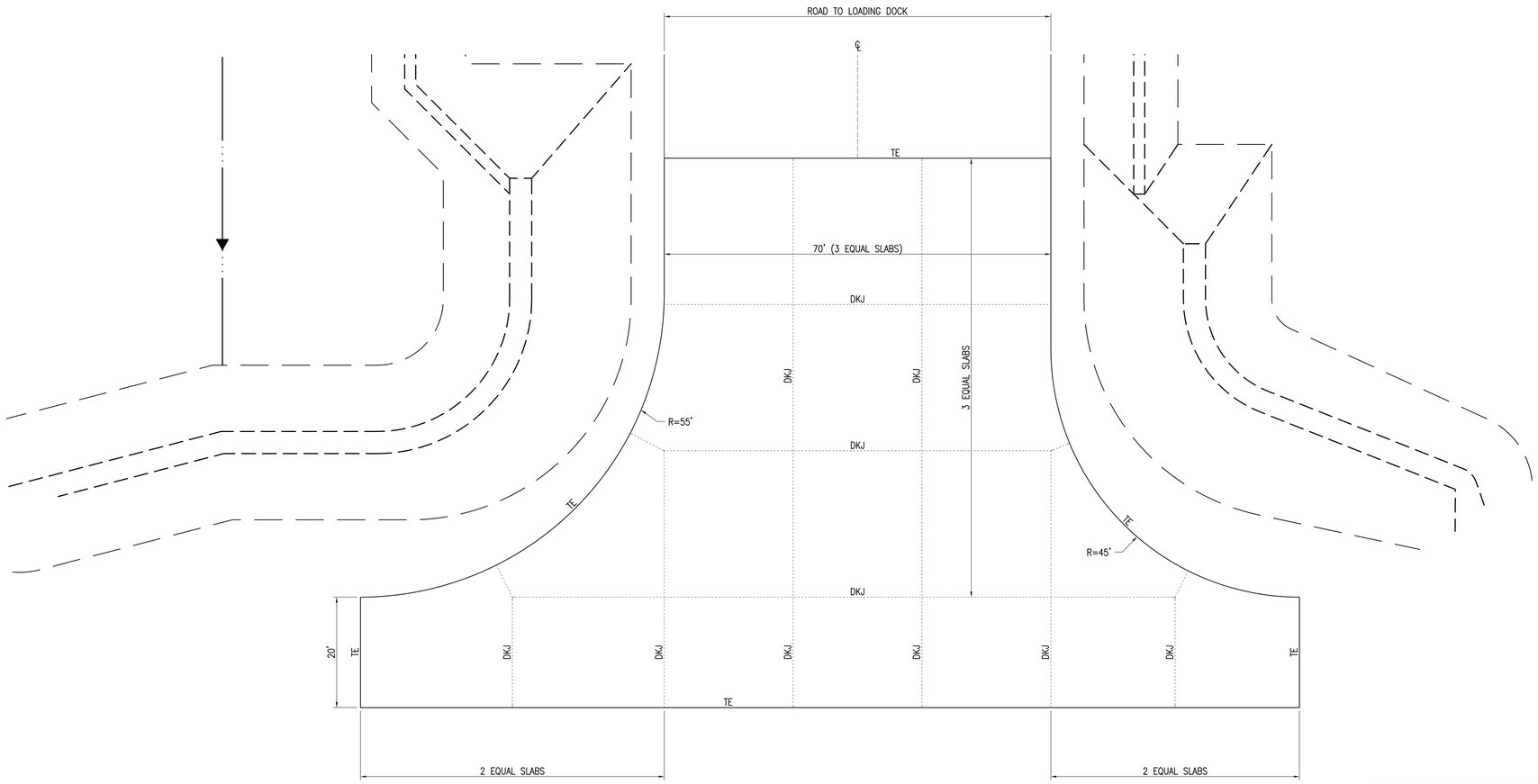


## CONCRETE JOINTING PLAN

N.T.S.

## NOTES:

1. ALL JOINTS SHALL BE DOWELLED CONSTRUCTION JOINTS (DKJ) OR DOWELLED CONTRACTION JOINTS (DCJ).
2. PROVIDE THICKENED EDGE AT PAVEMENT PERIMETER (TE).
3. SEE DETAILS ON SHEET CG503.

NORTH CAROLINA PROFESSIONAL SEAL 5302 ENGINEER C. ALLAN BAMFORTH, JR.
11/13/14

CG301

C. ALLAN BAMFORTH, JR.
ENGINEER–SURVEYOR, LTD.
NORFOLK, VIRGINIA

DEPARTMENT OF THE NAVY — NAVAL FACILITIES ENGINEERING COMMAND

MARINE CORPS BASE
CAMP LEJEUNE, NORTH CAROLINA

DES. CAB
DR. CAD
CHK. ALB
SUBMITTED BY:
DESIGN DIR.
APPROVED: PWO OR OICC DATE
SATISFACTORY TO: DATE

CONSTRUCT SR-10 AHA

TYPICAL CROSS SECTION AND CONCRETE JOINTING PLAN

| SIZE | CODE IDENT. NO | NAVFAC DRAWING NO. |
|---|---|---|
| F | 80091 | 60015542 |
| | | CONST. CONTR. NO. N40085-15-B-0008 |

SCALE: NONE | SPEC. 05-15-0008 | SHEET 12 OF 21

| REVISIONS | | | |
|---|---|---|---|
| SYM | | DATE | APPROVED |
| | | | |
| | | | |

## CONSTRUCTION SPECIFICATIONS

CLEAR THE ENTRANCE AND EXIT AREA OF ALL VEGETATION, ROOTS, AND OTHER OBJECTIONABLE MATERIAL AND PROPERLY GRADE IT.

1. PLACE THE GRAVEL TO THE SPECIFIC GRADE DIMENSIONS SHOWN ON THE PLANS, AND SMOOTH IT.
2. PROVIDE DRAINAGE TO CARRY WATER TO A SEDIMENT TRAP OR OTHER SUITABLE OUTLET
3. USE GEOTEXTILE FABRICS BECAUSE THEY IMPROVE STABILITY OF THE FOUNDATION LOCATIONS SUBJECT TO SEEPAGE OR HIGH WATER TABLE.

## MAINTENANCE

MAINTAIN THE GRAVEL PAD IN A CONDITION TO PREVENT MUD OR SEDIMENT FROM LEAVING THE CONSTRUCTION SITE. THIS MAY REQUIRE PERIODIC TOPDRESSING WITH 2–INCH STONE. AFTER EACH RAINFALL, INSPECT ANY STRUCTURE USED TO TRAP SEDIMENT AND CLEAN IT OUT AS NECESSARY. IMMEDIATELY REMOVE ALL OBJECTIONABLE MATERIALS SPILLED, WASHED, OR TRACKED ONTO PUBLIC ROADWAYS.

## DESIGN CRITERIA

AGGREGATE SIZE – USE 2–3 INCH WASHED STONE.

DIMENSIONS OF GRAVEL PAD
THICKNESS: 6 INCHED MINIMUM

WIDTH: 12–FEET MINIMUM OF FULL WIDTH AT ALL POINTS OF THE VEHICULAR ENTRANCE AND EXIT AREA, WHICHEVER IS GREATER

LENGTH: 50–FEET MINIMUM

LOCATION – LOCATE CONSTRUCTION ENTRANCES AND EXITS TO LIMIT SEDIMENT FROM LEAVING THE SITE AND TO PROVIDE FOR MAXIMUM UTILITY BY ALL CONSTRUCTION VEHICLES (FIGURE 6.06A). AVOID STEEP GRADES, AND ENTRANCES AT CURVES IN PUBLIC ROADS.

WASHING – IF CONDITIONS AT THE SITE ARE SUCH THAT MOST OF THE MUD AND SEDIMENT ARE NOT REMOVED BY VEHICLES TRAVELING OVER THE GRAVEL, THE TIRES SHOULD BE WASHED. WASHING SHOULD BE DONE ON AN AREA STABILIZED WITH CRUSHED STONE THAT DRAINS INTO A SEDIMENT TRAP OR OTHER SUITABLE DISPOSAL AREA. A WASH RACK MAY ALSO BE USED TO MAKE WASHING MORE CONVENIENT AND EFFECTIVE.

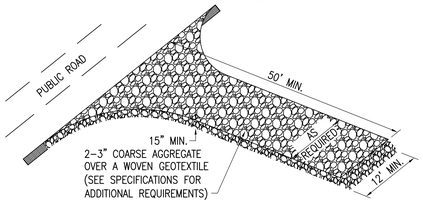


## TEMPORARY CONSTRUCTION ENTRANCE

(E & S CONTROL MEASURE (CE))
NC 6.06
N.T.S.

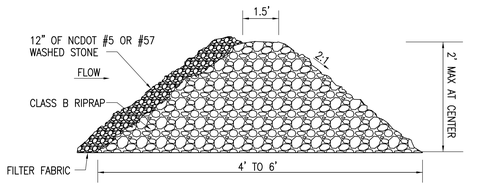


## CHECK DAM DETAIL

(E & S CONTROL MEASURE (CD))
NC 6.83
N.T.S.

## CONSTRUCTION SPECIFICATIONS

1. PLACE STONE TO THE LINES AND DIMENSIONS SHOWN IN THE PLAN ON A FILTER FABRIC FOUNDATION.
2. KEEP THE CENTER STONE SECTION AT LEAST 9 INCHES BELOW NATURAL GROUND LEVEL WHERE THE DAM ABUTS THE CHANNEL BANKS.
3. EXTEND STONE AT LEAST 1.5 FEET BEYOND THE DITCH BANK (FIGURE 6.83B) TO KEEP WATER FROM CUTTING AROUND THE ENDS OF THE CHECK DAM.
4. SET SPACING BETWEEN DAMS TO ASSURE THAT THE ELEVATION AT THE TOP OF THE LOWER DAM IS THE SAME AS THE TOE ELEVATION OF THE UPPER DAM.
5. PROTECT THE CHANNEL AFTER THE LOWEST CHECK DAM FROM HEAVY FLOW THAT COULD CAUSE EROSION.
6. MAKE SURE THAT THE CHANNEL REACH ABOVE THE MOST UPSTREAM DAM IS STABLE.
7. ENSURE THAT OTHER AREAS OF THE CHANNEL, SUCH AS CULVERT ENTRANCES BELOW THE CHECK DAMS, ARE NOT SUBJECT TO DAMAGE OR BLOCKAGE FROM DISPLACED STONES.

## MAINTENANCE

1. INSPECT CHECK DAMS AND CHANNELS AT LEAST WEEKLY AND AFTER EACH SIGNIFICANT (1/2 INCH OR GREATER) RAINFALL EVENT AND REPAIR IMMEDIATELY. CLEAN OUT SEDIMENT, STRAW, LIMBS, OR OTHER DEBRIS THAT COULD CLOG THE CHANNEL WHEN NEEDED.
2. ANTICIPATE SUBMERGENCE AND DEPOSITION ABOVE THE CHECK DAM AND EROSION FROM HIGH FLOWS AROUND THE EDGES OF THE DAM. CORRECT ALL DAMAGE IMMEDIATELY. IF SIGNIFICANT EROSION OCCURS BETWEEN DAMS, ADDITIONAL MEASURES CAN BE TAKEN SUCH AS, INSTALLING A PROTECTIVE RIPRAP LINER IN THAT PORTION OF THE CHANNEL (PRACTICE 6.31, RIPRAP–LINE AND PAVED CHANNELS).
3. REMOVE SEDIMENT ACCUMULATED BEHIND THE DAMS AS NEEDED TO PREVENT DAMAGE TO CHANNEL VEGETATION, ALLOW THE CHANNEL TO DRAIN THROUGH THE STONE CHECK DAM, AND PREVENT LARGE FLOWS FROM CARRYING SEDIMENT OVER THE DAM. ADD STONES TO DAMS AS NEEDED TO MAINTAIN DESIGN HEIGHT AND CROSS SECTION.

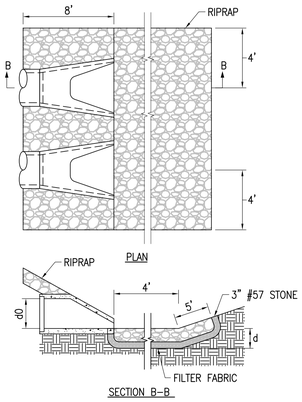


## RIPRAP OUTLET PERMANENT PROTECTION

(E & S CONTROL MEASURE (OP))
NC 6.41
N.T.S.

## CONSTRUCTION SPECIFICATIONS

1. d=1.5 TIMES THE MAXIMUM STONE DIAMETER, BUT NOT LESS THAN 6"
2. TABLE –

| Outlet Structure No. | Outlet Pipe Diameter (Inches) | 2 Pipes Discharge (Q, cfs) | Velocity (V, fps) | Minimum Apron Length (Ft.) | Minimum Apron Width (Ft.) | Minimum Apron Thickness (Ft.) | Median Stone Size $d_{50}$ (Ft.) | Maximum Tailwater Depth (ft) | Riprap |
|---|---|---|---|---|---|---|---|---|---|
| 2 | 24 | 7.82 | 3.50 | 17.0 | 13.0 | 0.50 | 0.10 | 0.77 | Class A |

## MAINTENANCE

1. INSPECT RIPRAP OUTLET STRUCTURES WEEKLY AND AFTER SIGNIFICANT (1/2 INCH OR GREATER) RAINFALL EVENTS TO SEE IF ANY EROSION AROUND OR BELOW THE RIPRAP HAS TAKEN PLACE, OR IF STONES HAVE BEN DISLODGED. IMMEDIATELY MAKE ALL NEEDED REPAIRS TO PREVENT FURTHER DAMAGE.

## MAINTENANCE

1. INSPECT SEDIMENT FENCES AT LEAST ONCE A WEEK AND AFTER EACH RAINFALL. MAKE ANY REQUIRED REPAIRS IMMEDIATELY.
2. SHOULD THE FABRIC OF A SEDIMENT FENCE COLLAPSE, TEAR, DECOMPOSE OR BECOME INEFFECTIVE, REPLACE IT PROMPTLY.
3. REMOVE SEDIMENT DEPOSITS AS NECESSARY TO PROVIDE ADEQUATE STORAGE VOLUME FOR THE NEXT RAIN AND TO REDUCE PRESSURE ON THE FENCE. TAKE CARE TO AVOID UNDERMINING THE FENCE DURING CLEANOUT.
4. REMOVE ALL FENCING MATERIALS AND UNSTABLE SEDIMENT DEPOSITS AND BRING THE AREA TO GRADE AND STABILIZE IT AFTER THE CONTRIBUTING DRAINAGE AREA HAS BEEN PROPERTY STABILIZED.

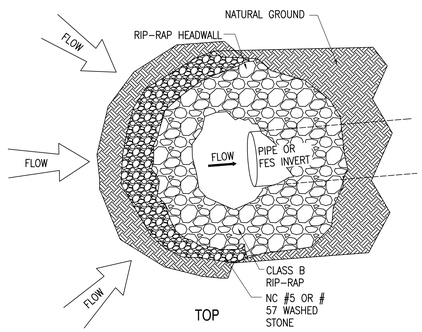


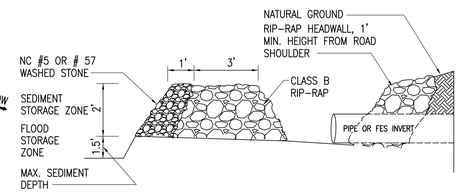


## CULVERT PROTECTION

(E & S CONTROL MEASURE (CP))
NC 6.55
N.T.S.

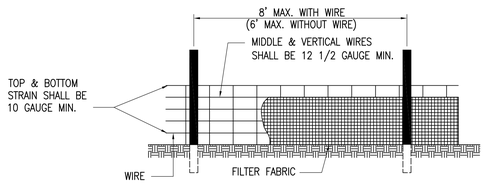


NOTES:
USE WIRE A MINIMUM OF 32" IN WIDTH & WITH A MINIMUM OF 6 LINE WIRES WITH 12" STAY SPACING.
USE FILTER FABRIC A MINIMUM OF 36" IN WIDTH & FASTEN ADEQUATELY TO THE WIRE AS DIRECTED BY THE ENGINEER.
PROVIDE 5'–0" STEEL POST OF THE SELF–FASTENER ANGLE STEEL TYPE.

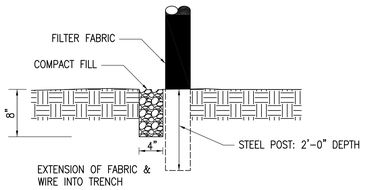


SECTION AT BASE

## TEMPORARY SEDIMENT / SILT FENCE

(E & S CONTROL MEASURE (SF))
NCDOT 6.62
N.T.S.

## CONSTRUCTION SPECIFICATIONS

MATERIALS
1. USE A SYNTHETIC FILTER FABRIC OF AT LEAST 95% BY WEIGHT OF POLYOLEFINS OR POLYESTER, WHICH IS CERTIFIED BY THE MANUFACTURER OR SUPPLIER AS CONFORMING TO THE REQUIREMENTS IN ASTM D 6461, WHICH IS SHOWN IN PART IN TABLE 6.62B.
2. SYNTHETIC FILTER FABRIC SHOULD CONTAIN ULTRAVIOLET RAY INHIBITORS AND STABILIZERS TO PROVIDE A MINIMUM OF 6 MONTHS OF EXPECTED USABLE CONSTRUCTION LIFE AT A TEMPERATURE RANGE OF 0 TO 120° F.
3. ENSURE THAT POSTS FOR SEDIMENT FENCES ARE 1.33 LB/LINEAR FT STEEL WITH A MINIMUM LENGTH OF 5 FEET. MAKE SURE THAT STEEL POSTS HAVE PROJECTIONS TO FACILITATE FASTENING THE FABRIC.
4. FOR REINFORCEMENT OF STANDARD STRENGTH FILTER FABRIC, USE WIRE FENCE WITH A MINIMUM 14 GUAGE AND A MAXIMUM MESH SPACING OF 6 INCHES.

CONSTRUCTION
1. CONSTRUCT THE SEDIMENT BARRIER OF STANDARD STRENGTH OR EXTRA STRENGTH SYNTHETIC FILTER FABRICS.
2. ENSURE THAT THE HEIGHT OF THE SEDIMENT FENCE DOES NOT EXCEED 24 INCHES ABOVE THE GROUND SURFACE. (HIGHER FENCES MAY IMPOUND VOLUMES OF WATER SUFFICIENT TO CAUSE FAILURE OF THE STRUCTURE.)
3. CONSTRUCT THE FILTER FABRIC FROM A CONTINUOUS ROLL CUT TO LENGTH OF THE BARRIER TO AVOID JOINTS. WHEN JOINTS ARE NECESSARY, SECURELY FASTEN THE FILTER CLOTH ONLY AT A SUPPORT POST WITH 4 FEET MINIMUM OVERLAP TO THE NEXT POST.
4. SUPPORT STANDARD STRENGTH FILTER FABRIC BY WIRE MESH FASTENED SECURELY TO THE UPSLOPE SIDE OF THE POSTS. EXTEND THE WIRE MESH SUPPORT TO THE BOTTOM OF THE TRENCH. FASTEN THE WIRE REINFORCEMENT, THEN FABRIC ON THE UPSLOPE SIDE OF THE FENCE POST. WIRE OR PLASTIC ZIP TIES SHOULD HAVE MINIMUM 50 POUND TENSILE STRENGTH.
5. WHEN A WIRE MESH SUPPORT FENCE IS USED, SPACE POSTS A MAXIMUM OF 8 FEET APART. SUPPORT POSTS SHOULD BE DRIVEN SECURELY INTO THE GROUND A MINIMUM OF 24 INCHES.
6. EXTRA STRENGTH FILTER FABRIC WITH 6 FEET POST SPACING DOES NOT REQUIRE WIRE MESH SUPPORT FENCE. SECURELY FASTEN THE FILTER FABRIC DIRECTLY TO POSTS. WIRE OR PLASTIC ZIP TIES SHOULD HAVE MINIMUM 50 POUND TENSILE STRENGTH.
7. EXCAVATE A TRENCH APPROXIMATELY 4 INCHES WIDE AND 8 INCHES DEEP ALONG THE PROPOSED LINE OF POSTS AND UPSLOPE FROM THE BARRIER.
8. PLACE 12 INCHES OF THE FABRIC ALONG THE BOTTOM AND SIDE OF THE TRENCH.
9. BACKFILL THE TRENCH WITH SOIL PLACED OVER THE FILTER FABRIC AND COMPACT. THOROUGH COMPACTION OF THE BACKFILL IS CRITICAL TO SILT FENCE PERFORMANCE.
10. DO NOT ATTACH FILTER FABRIC TO EXISTING TREES.

SEDIMENT FENCE INSTALLATION USING THE SLICING METHOD
INSTEAD OF EXCAVATING A TRENCH, PLACING FABRIC AND THEN BACKFILLING TRENCH, SEDIMENT FENCE MAY BE INSTALLED USING SPECIALLY DESIGNED EQUIPMENT THAT INSERTS THE FABRIC INTO A CUT SLICED IN THE GROUND WITH A DISC.

INSTALLATION
1. THE BASE OF BOTH END POSTS SHOULD BE AT LEAST ONE FOOT HIGHER THAN THE MIDDLE OF THE FENCE. CHECK WITH A LEVEL IF NECESSARY.
2. INSTALL POSTS 4 FEET APART IN CRITICAL AREAS AND 6 FEET APART ON STANDARD APPLICATIONS.
3. INSTALL POST 2 FEET DEEP ON THE DOWNSTREAM SIDE OF THE SILT FENCE, AND AS CLOSE AS POSSIBLE TO THE FABRIC, ENABLING POSTS TO SUPPORT THE FABRIC FROM UPSTREAM WATER PRESSURE.
4. INSTALL POSTS WITH THE NIPPLES FACING AWAY FROM THE SILT FABRIC.
5. ATTACH THE FABRIC TO EACH POST WITH THREE TIES, ALL SPACED WITHIN THE TOP 8 INCHES OF THE FABRIC. ATTACH EACH TIE DIAGONALLY 45 DEGREES THROUGH THE FABRIC, WITH EACH PUNCTURE AT LEAST 1 INCH VERTICALLY APART. ALSO, EACH TIE SHOULD BE POSITIONED TO HANG ON A POST NIPPLE WHEN TIGHTENED TO PREVENT SAGGING.
6. WRAP APPROXIMATELY 6 INCHES OF FABRIC AROUND THE END POSTS AND SECURE WITH 3 TIES.
7. NO MORE THAN 24 INCHES OF A 36 INCH FABRIC IS ALLOWED ABOVE GROUND LEVEL.
8. THE INSTALLATION SHOULD BE CHECKED AND CORRECTED FOR ANY DEVIATIONS BEFORE COMPACTION.
9. COMPACTION IS VITALLY IMPORTANT FOR EFFECTIVE RESULTS. COMPACT THE SOIL IMMEDIATELY NEXT TO THE SILT FENCE FABRIC WITH THE FRONT WHEEL OF THE TRACTOR, SKID STEER, OR ROLLER EXERTING AT LEAST 60 POUNDS PER SQUARE INCH. COMPACT THE UPSTREAM SIDE FIRST, AND THEN EACH SIDE TWICE FOR A TOTAL OF 4 TRIPS.

NORTH CAROLINA PROFESSIONAL SEAL SE-2302 ENGINEER C. ALLAN BAMFORTH, JR.
11/13/14

CG501

| | |
|---|---|
| C. ALLAN BAMFORTH, JR. ENGINEER–SURVEYOR, LTD. NORFOLK, VIRGINIA | DEPARTMENT OF THE NAVY — NAVAL FACILITIES ENGINEERING COMMAND<br>MARINE CORPS BASE<br>CAMP LEJEUNE, NORTH CAROLINA |
| DES. CAB<br>DR. CAD<br>CHK. ALB<br>SUBMITTED BY:<br>DESIGN DIR. | CONSTRUCT SR-10 AHA<br>EROSION CONTROL NOTES & DETAILS |
| APPROVED: PWO OR OICC DATE<br>SATISFACTORY TO: DATE | SIZE F · CODE IDENT. NO 80091 · NAVFAC DRAWING NO. 60015543<br>CONST. CONTR. NO. N40085-15-B-0008 |
| | SCALE: NONE · SPEC. 05-15-0008 · SHEET 13 OF 21 |

## NORTH CAROLINA SEEDING REQUIREMENTS

TEMPORARY SEEDING RECOMMENDATIONS FOR LATE WINTER AND EARLY SPRING

SEEDING MIXTURE

| SPECIES | RATE (LB/ACRE) |
|---|---|
| RYE GRAIN | 120 |

THE USE OF ANNUAL RYE GRASS IS PROHIBITED FOR USE IN ANY APPLICATION

| | |
|---|---|
| ANNUAL LESPEDEZA | 50 |

(KOBE IN PIEDMONT AND COASTAL PLAIN, KOREAN IN MOUNTAINS)

OMIT ANNUAL LEOPEDEZA WHEN DURATION OF TEMPORARY COVER IS NOT TO EXTEND BEYOND JUNE.

SEEDING DATES
MOUNTAINS – ABOVE 2500 FT: FEB. 15 – MAY 15
BELOW 2500 FT: FEB. 1 – MAY 1
PIEDMONT – JAN. 1 – MAY 1
COASTAL PLAIN – DEC. 1 – APR. 15

SOIL AMENDMENTS
APPLY 2,000 LB/ACRE GROUND AGRICULTURAL LIMESTONE AND 750 LB/ACRE 10–10–10 FERTILIZER.

MULCH
APPLY 4,000 LB/ACRE STRAW. ANCHOR STRAW BY TACKING WITH ASPHALT, NETTING, OR A MULCH ANCHORING TOOL. A DISK WITH BLADES SET NEARLY STRAIGHT CAN BE USED AS A MULCH ANCHORING TOOL.

MAINTENANCE
REFERTILIZE IF GROWTH IS NOT FULLY ADEQUATE. RESEED, REFERTILIZE AND MULCH IMMEDIATELY FOLLOWING EROSION OR OTHER DAMAGE.

TEMPORARY SEEDING RECOMMENDATIONS FOR SUMMER

SEEDING MIXTURE

| SPECIES | RATE (LB/ACRE) |
|---|---|
| GERMAN MILLET | 40 |

IN THE PIEDMONT AND MOUNTAINS, A SMALL–STEMMED SUDANGRASS MAY BE SUBSTITUTED AT A RATE OF 50 LB/ACRE.

SEEDING DATES
MOUNTAINS – MAY 15–AUG. 15
PIEDMONT – MAY 1–AUG. 15
COASTAL PLAIN APR. 15–AUG. 15

SOIL AMENDMENTS
APPLY 2000 LB/ACRE GROUND AGRICULTURE LIMESTONE AND 750 LB/ACRE 10–10–10 FERTILIZER.

MULCH
APPLY 4,000 LB/ACRE STRAW. ANCHOR STRAW BY TACKING WITH ASPHALT, NETTING, OR A MULCH ANCHORING TOOL. A DISK WITH BLADES SET NEARLY STRAIGHT CAN BE USED AS A MULCH ANCHORING TOOL.

MAINTENANCE
REFERTILIZE IF GROWTH IS NOT FULLY ADEQUATE. RESEED, REFERTILIZE AND MULCH IMMEDIATELY FOLLOWING EROSION OR OTHER DAMAGE.

TEMPORARY SEEDING RECOMMENDATIONS FOR FALL

SEEDING MIXTURE

| SPECIES | RATE (LB/ACRE) |
|---|---|
| RYE GRAIN | 120 |

THE USE OF ANNUAL RYE GRASS IS PROHIBITES FOR USE IN ANY APPLICATION

SEEDING DATES
MOUNTAINS – AUG 15–DEC. 15
COASTAL PLAIN AND PIEDMONT – AUG 15–DEC 30

SOIL AMENDMENTS
APPLY 2000 LB/ACRE GROUND AGRICULTURE LIMESTONE AND 1000 LB/ACRE 10–10–10 FERTILIZER.

MULCH
APPLY 4,000 LB/ACRE STRAW. ANCHOR STRAW BY TACKING WITH ASPHALT, NETTING, OR A MULCH ANCHORING TOOL. A DISK WITH BLADES SET NEARLY STRAIGHT CAN BE USED AS A MULCH ANCHORING TOOL.

MAINTENANCE
REPAIR AND REFERTILIZE DAMAGED AREAS IMMEDIATELY. TOPDRESS WITH 50 LB/ACRE OF NITROGEN IN MARCH. IF IT IS NECESSARY TO EXTEND TEMPORARY COVER BEYOND JUNE 15, OVERSEED WITH 50 LB/ACRE KOBE (PIEDMONT AND COASTAL PLAIN) OR KOREAN (MOUNTAINS) LESPEDEZA IN LATE FEBRUARY OR EARLY MARCH.

PERMANENT SEEDING NO. 1CP FOR: WELL–TO POORLY DRAINED SOILS WITH GOOD MOISTURE RETENTION; LOW MAINTENANCE

SEEDING MIXTURE

| SPECIES | RATE (LB/ACRE) |
|---|---|
| TALL FESCUE | 80 |
| PENSACOLA BAHIAGRASS | 50 |
| SERICEA LESPEDEZA | 30 |
| KOBE LESPEDEZA | 10 |

SEEDING NOTES
1. FROM SEPT 1. – MAR 1., USE UNSCARIFIED SERICEA SEED.
2. ON POORLY DRAINED SITES OMIT SERICEA AND INCREASE KOBE TO 30 LB/ACRE.
3. WHERE A NEAT APPEARANCE IS DESIRED, OMIT SERICEA AND INCREASE KOBE TO 40 LB/ACRE.

NURSE PLANTS
BETWEEN APR. 15. AND AUG. 15, ADD 10 LB/ACRE GERMAN MILLET OR 15 LB/ACRE SUDANGRASS. PRIOR TO MAY 1 OR AFTER AUG 15, ADD 25 LB/ACRE RYE (GRAIN).

SEEDING DATES

| | BEST | POSSIBLE |
|---|---|---|
| EARLY SPRING: | FEB.15–MAR. 20 | FEB. 15–APR. 30 |
| FALL: | SEPT. 1–SEPT. 30 | SEPT. 1–OCT. 31 |

SOIL AMENDMENTS
APPLY 3,000–5000 LB/ACRE GROUND AGRICULTURAL LIMESTONE (USE THE LOWER RATE ON SANDY SOILS) AND 1,000 LB/ACRE 10–10–10 FERTILIZER.

MULCH
APPLY 4,000 LB/ACRE GRAIN STRAW OR EQUIVALENT COVER OF ANOTHER SUITABLE MULCH. ANCHOR STRAW BY TACKING WITH ASPHALT, NETTING, OR ROVING OR BY CRIMPING WITH A MULCH ANCHORING TOOL. A DISK WITH BLADES SET NEARLY STRAIGHT CAN BE USED AS A MULCH ANCHORING TOOL.

MAINTENANCE
IF GROWTH IS LESS THAN ADEQUATE, REFERTILIZE IN THE SECOND YEAR, ACCORDING TO SOIL TESTS OR TOPDRESS WITH 500 LB/ACRE 10–10–10 FERTILIZER. MOW AS NEEDED WHEN SERICEA IS OMITTED FROM THE MIXTURE. RESEED, FERTILIZE, AND MULCH DAMAGED AREAS IMMEDIATELY.

SODDING

VARIETIES

CENTIPEDEGRASS NO IMPROVED VARIETIES

PULVERIZED AGRICULTURAL LIMESTONE AT A RATE OF 2 TONS/ ACRE (100 LB/ 1,000 SF ) FERTILIZER AT A RATE OF 1,000 LB/ ACRE (25 LB/ 1,000 SF ) OF 10–10–10 IN FALL OR 5–10–10 IN SPRING.

MAINTENANCE

AFTER THE FIRST WEEK, WATER AS NECESSARY TO MAINTAIN ADEQUATE MOISTURE IN THE ROOT ZONE AND PREVENT DORMANCY OF THE SOD.

DO NOT REMOVE MORE THAN ONE–THIRD OF THE SHOOT IN ANY MOWING. GRASS HEIGHT SHOULD BE MAINTAINED BETWEEN 2 AND 3 INCHES UNLESS OTHERWISE SPECIFIED.

AFTER THE FIRST GROWING SEASON, ESTABLISHED SOD REQUIRES FERTILIZATION, AND MAY ALSO REQUIRE LIME. FOLLOW SOIL TEST RECOMMENDATIONS WHEN POSSIBLE, OR USE THE RATES IN TABLE 6.12b OF THE STANDARDS AND SPECIFICATIONS OF THE NORTH CAROLINA EROSION AND SEDIMENT CONTROL PLANNING DESIGN MANUAL (REVISED JUNE 2006).

## EROSION AND SEDIMENT CONTROL NOTES

1. UNLESS OTHERWISE INDICATED, ALL VEGETATIVE AND STRUCTURAL EROSION AND SEDIMENT CONTROL PRACTICES WILL BE CONSTRUCTED AND MAINTAINED ACCORDING TO MINIMUM STANDARDS AND SPECIFICATIONS OF THE NORTH CAROLINA EROSION AND SEDIMENT CONTROL PLANNING DESIGN MANUAL (REVISED JUNE 2006).
2. THE CONTRACTOR SHALL APPLY PERMANENT OR TEMPORARY SOIL STABILIZATION TO ALL DENUDED OR DISTURBED AREAS WITHIN 7 DAYS OF THE LAST LAND DISTURBING ACTIVITY FOR THE PERIMETER DIKES, SWALES, DITCHES AND SLOPES, HIGH QUALITY WATER (HWQ) ZONES AND SLOPES STEEPER THAN 3:1. SOIL STABILIZATION MUST ALSO BE APPLIED TO DENUDED OR DISTURBED AREAS WITHIN 14 DAYS OF THE LAST LAND DISTURBING ACTIVITY FOR SLOPES 3:1 OR FLATTER AND OTHER AREAS WITH SLOPES FLATTER THAN 4:1. SOIL STABILIZATION MEASURES INCLUDE VEGETATIVE ESTABLISHMENT, MULCHING AND THE EARLY APPLICATION OF GRAVEL BASE MATERIAL ON AREAS TO BE PAVED.
3. ALL EROSION AND SEDIMENT CONTROL MEASURES ARE TO BE INSTALLED PRIOR TO OR AS THE FIRST STEP IN CONSTRUCTION.
4. THE NPDES CONSTRUCTION PERMIT REQUIRES EROSION CONTROL DEVICES AND STORM OUTFALLS BE INSPECTED WEEKLY (EVERY 7 CALENDAR DAYS) AND WITHIN 24 HOURS OF A .5 INCH RAIN EVENT. IT WILL BE THE RESPONSIBILITY OF THE CONTRACTOR TO CONDUCT THESE INSPECTIONS AND MAINTAIN RECORDS UNTIL THE AREA HAS STABILIZATION, EVIDENT BY 95% VEGETATIVE GROWTH FOR AREAS PROVIDED SEEDING. REMOVE SEDIMENT DEPOSITS AS NECESSARY TO PROVIDE ADEQUATE STORAGE VOLUME FOR THE NEXT RAIN AND TO REDUCE PRESSURE ON THE FENCE. SEDIMENT SHALL BE REMOVED WHEN THE LEVEL OF SEDIMENT DEPOSITION REACHES HALF WAY TO THE TOP OF THE BARRIER. TAKE CARE TO AVOID UNDERMINING THE FENCE DURING CLEANOUT. TO FACILITATE RAINFALL MONITORING A RAIN GAUGE IS REQUIRED TO BE ON SITE. ONCE STABILIZATION HAS BEEN ACCOMPLISHED INSPECTION RECORDS ARE TO BE FORWARDED TO THE GOVERNMENT AND ALL TEMPORARY EROSION/SEDIMENTATION CONTROL DEVICES REMOVED. THE CONTRACTOR IS RESPONSIBLE FOR MAINTAINING COMPLIANCE WITH ALL PERMITS AND PLANS, ANY CHANGES MUST BE APPROVED BY THE STATE PRIOR TO EXECUTION. A COPY OF THE EROSION AND SEDIMENTATION CONTROL PLAN, LETTER OF APPROVAL, AND NPDES CONSTRUCTION PERMIT MUST BE MAINTAINED BY THE CONTRACTOR AT THE ONSITE OFFICE.
5. THE CONTRACTOR SHALL LIMIT SITE ACCESS BY CONSTRUCTION VEHICLES TO ENTRANCES PROTECTED BY A STONE CONSTRUCTION ENTRANCE. SEDIMENT SHALL BE REMOVED FROM PAVED AREAS ON A DAILY BASIS.
6. STOCKPILES OF SOIL AND OTHER ERODIBLE MATERIALS SHALL BE STABILIZED OR PROTECTED WITH SEDIMENT TRAPPING MEASURES. THE CONTRACTOR IS RESPONSIBLE FOR THE TEMPORARY PROTECTION AND PERMANENT STABILIZATION FOR STOCKPILES ON SITE AS WELL AS FOR MATERIALS TRANSPORTED FROM THE PROJECT SITE.
7. THE CONTRACTOR SHALL MONITOR AND TAKE PRECAUTIONS TO CONTROL DUST INCLUDING (BUT NOT LIMITED TO) USE OF WATER, MULCH, OR CHEMICAL DUST ADHESIVES AND CONTROL OF CONSTRUCTION SITE TRAFFIC.
8. EFFLUENT FROM DE–WATERING OPERATIONS SHALL BE FILTERED OR PASSED THROUGH AN APPROVED SEDIMENT TRAPPING DEVICE, OR BOTH, AND DISCHARGED IN A MANNER THAT DOES NOT ADVERSELY AFFECT ADJACENT PROPERTIES, WETLANDS, WATERWAYS OR THE STORM DRAINAGE SYSTEM.
9. THE CONTRACTOR IS RESPONSIBLE FOR INSTALLATION AND MAINTENANCE OF ANY ADDITIONAL CONTROL MEASURES NECESSARY TO PREVENT EROSION AND SEDIMENTATION AS DETERMINED NECESSARY BY THE PLAN APPROVING AUTHORITY.
10. TEMPORARY EROSION AND SEDIMENT CONTROL MEASURES ARE NOT TO BE REMOVED UNTIL ALL DISTURBED AREAS ARE STABILIZED. AFTER STABILIZATION IS COMPLETE. ALL MEASURES SHALL BE REMOVED WITHIN 30 DAYS. TRAPPED SEDIMENT SHALL BE SPREAD AND SEEDED.
11. ANY SEDIMENT THAT HAS BEEN TRANSPORTED BEYOND THE PROJECT LIMITS SHALL BE REMOVED. RESPONSIBLE MAINTENANCE CONTACT: NEAL PAUL DEPUTY PUBLIC WORKS OFFICER 910–451–2213.
12. ALL BORROW MATERIAL SHALL BE PROVIDED FROM AN APPROVED BORROW PIT. ALL SOIL WASTE SHALL BE TRANSPORTED OFF GOVERNMENT PROPERTY TO AN APPROVED LANDFILL.
13. MINIMIZE THE AMOUNT OF EXPOSED AREAS DURING CONSTRUCTION. MAXIMUM AMOUNT OF EXPOSED AREA SHALL BE 1.54 ACRES.

## SOIL REMOVAL NOTE:

1. SOIL REMOVED FROM SITE SHALL BECOME THE PROPERTY OF THE CONTRACTOR AND BE REMOVED FROM GOVERNMENT PROPERTY.

## SEQUENCE OF CONSTRUCTION

1. OBTAIN PLAN APPROVAL AND OTHER APPLICABLE PERMITS.
2. CONTRACTOR SHALL CONTACT NORTH CAROLINA DEPARTMENT OF THE ENVIRONMENT AND NATURAL RESOURCES (NCDENR) PRIOR TO CONSTRUCTION.
3. HOLD PRECONSTRUCTION CONFERENCE WITH PUBLIC WORKS OFFICER 910.451.2213 AT LEAST ONE WEEK PRIOR TO CONSTRUCTION.
4. FIELD MARK THE LIMITS OF DISTURBANCE AND INSTALL PERIMETER SEDIMENT FENCE.
5. INSTALL TEMPORARY CONSTRUCTION ENTRANCE AND CULVERT PROTECTION AS SHOWN ON CD105.
6. COMPLETE SITE CLEARING AND INSTALL REMAINING EROSION AND SEDIMENT CONTROL DEVICES AS INDICATED ON CD105. DEMOLISH AND REMOVE ITEMS INDICATED ON THE PLAN. ROUGH GRADE SITE.
7. MINIMIZE THE AMOUNT OF EXPOSED AREAS DURING CONSTRUCTION. STABILIZE GRADED AND DISTURBED AREAS IMMEDIATELY AFTER GRADING.
8. INSTALL DITCHES BEGINNING AT EXISTING OUTFALL WORKING UPSTREAM.
9. INSTALL CHECK DAMS 1, 2, 3 AND 4 ON SHEET CG101.
10. EXCAVATE PIPE TRENCH AND PAVEMENT SECTION. INSTALL GEOGRID/GEOTEXTILE AS INDICATED. INSTALL STORM PIPE WITH INLET AND OUTLET PROTECTION. COMPLETE INSTALLATION OF FILL MATERIAL TO FINISH GRADES.
11. STABILIZE DITCHES WITH TEMPORARY MATTING.
12. REMOVE SILT FENCE TO SOUTH AND COMPLETE PAVEMENT BASE TO ROAD INTERSECTION.
13. COMPLETE GRAVEL AND PCC SURFACE, TURF LAYDOWN AREA AND SHOULDER INSTALLATION.
14. CONSTRUCT LOADING PAD.
15. INSTALL SOD.
16. PERMANENT STABILIZATION SHALL BE PROVIDED IMMEDIATELY ON AREAS THAT HAVE BEEN FINAL GRADED.
17. TEMPORARY SEEDING AND MULCHING SHALL BE PROVIDED ON ALL AREAS DISTURBED BY CONSTRUCTION ACTIVITIES NOT COVERED BY PAVEMENT.
18. TEMPORARY EROSION FEATURES SHALL BE INSPECTED PER THE EROSION AND SEDIMENT CONTROL NOTES.
19. REMOVE TEMPORARY EROSION CONTROL MEASURES AT THE END OF CONSTRUCTION PER THE EROSION AND SEDIMENT CONTROL NOTES.

REVISIONS

| SYM | | DATE | APPROVED |
|---|---|---|---|
| | | | |
| | | | |

NORTH CAROLINA PROFESSIONAL SEAL 5202 ENGINEER C. ALLAN BAMFORTH, JR.
11/13/14

CG502

C. ALLAN BAMFORTH, JR.
ENGINEER–SURVEYOR, LTD.
NORFOLK, VIRGINIA

DEPARTMENT OF THE NAVY — NAVAL FACILITIES ENGINEERING COMMAND
MARINE CORPS BASE
CAMP LEJEUNE, NORTH CAROLINA

DES. CAB
DR. CAD
CHK. ALB
SUBMITTED BY:
DESIGN DIR.
APPROVED: PWO OR OICC — DATE
SATISFACTORY TO: — DATE

CONSTRUCT SR-10 AHA
EROSION AND SEDIMENT CONTROL NOTES

| SIZE | CODE IDENT. NO | NAVFAC DRAWING NO. |
|---|---|---|
| F | 80091 | 60015544 |

CONST. CONTR. NO. N40085-15-B-0008

SCALE: NONE | SPEC. 05-15-0008 | SHEET 14 OF 21

| REVISIONS | | | |
|---|---|---|---|
| SYM | | DATE | APPROVED |
| | | | |
| | | | |

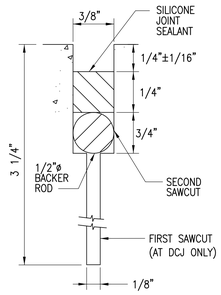


## SAWED JOINT DETAIL (A / CG503)

N.T.S.

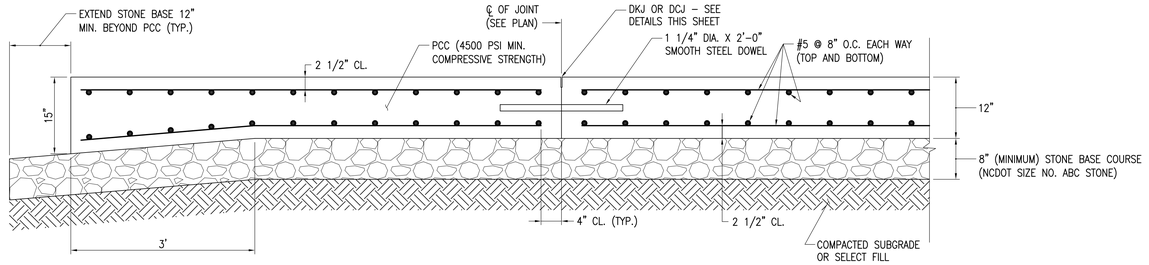


## PCC PAVEMENT DETAIL

N.T.S.

NOTE:
1. DOWELS AND TIE BARS SHALL BE SPACED SUCH THAT THEY ARE NO CLOSER THAN 18" TO PERPENDICULAR JOINT.
2. BASE COURSE NOT SHOWN FOR CLARITY.

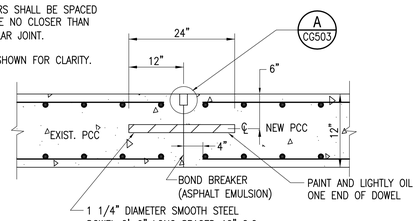


NOTE: DRILL AND GROUT DOWEL AT MID-DEPTH OF EXISTING PCC.

## DOWELLED CONSTRUCTION JOINT (DKJ)

N.T.S.

NOTE:
1. DOWELS AND TIE BARS SHALL BE SPACED SUCH THAT THEY ARE NO CLOSER THAN 10" TO PERPENDICULAR JOINT.
2. BASE COURSE NOT SHOWN FOR CLARITY.

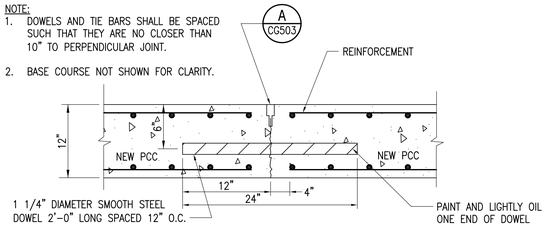


## DOWELLED CONTRACTION JOINT (DCJ)

N.T.S.

NORTH CAROLINA PROFESSIONAL SEAL 19302 ENGINEER C. ALLAN BAMFORTH, JR.

11/13/14

CG503

C. ALLAN BAMFORTH, JR.
ENGINEER–SURVEYOR, LTD.
NORFOLK, VIRGINIA

DEPARTMENT OF THE NAVY — NAVAL FACILITIES ENGINEERING COMMAND

MARINE CORPS BASE
CAMP LEJEUNE, NORTH CAROLINA

DES. CAB
DR. CAD
CHK. ALB
SUBMITTED BY:
DESIGN DIR.
APPROVED: PWO OR OICC — DATE
SATISFACTORY TO: — DATE

CONSTRUCT SR-10 AHA

DETAILS

| SIZE | CODE IDENT. NO | NAVFAC DRAWING NO. |
|---|---|---|
| F | 80091 | 60015545 |
| | | CONST. CONTR. NO. N40085-15-B-0008 |

SCALE: NONE — SPEC. 05-15-0008 — SHEET 15 OF 21

| REVISIONS | | | |
|---|---|---|---|
| SYM | | DATE | APPROVED |
| | | | |
| | | | |

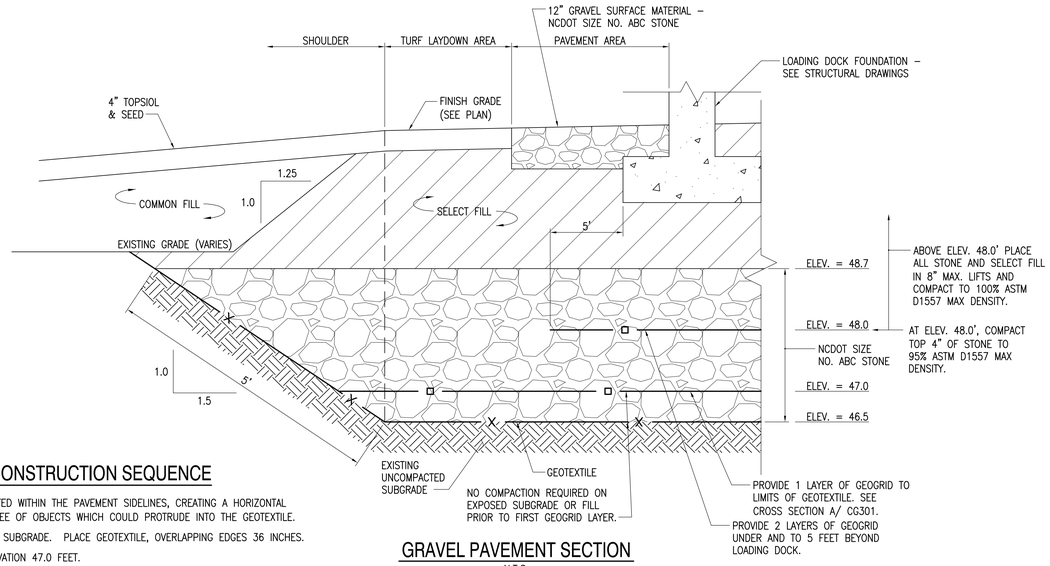


## GRAVEL PAVEMENT SECTION

N.T.S.

## GRAVEL PAVEMENT CONSTRUCTION SEQUENCE

1. EXCAVATE TO THE DEPTH INDICATED WITHIN THE PAVEMENT SIDELINES, CREATING A HORIZONTAL SURFACE THAT IS LEVEL AND FREE OF OBJECTS WHICH COULD PROTRUDE INTO THE GEOTEXTILE.
2. DO NOT COMPACT THE EXPOSED SUBGRADE. PLACE GEOTEXTILE, OVERLAPPING EDGES 36 INCHES.
3. PLACE FILL IN ONE LIFT TO ELEVATION 47.0 FEET.
4. PLACE GEOGRID AND OVERLYING MATERIAL IN ONE LIFT TO ELEVATION 48.0 FEET.
5. PLACE GEOGRID AND OVERLYING MATERIAL TO ELEVATION 48.7 FEET.
6. PLACE FILL MATERIAL AS INDICATED.

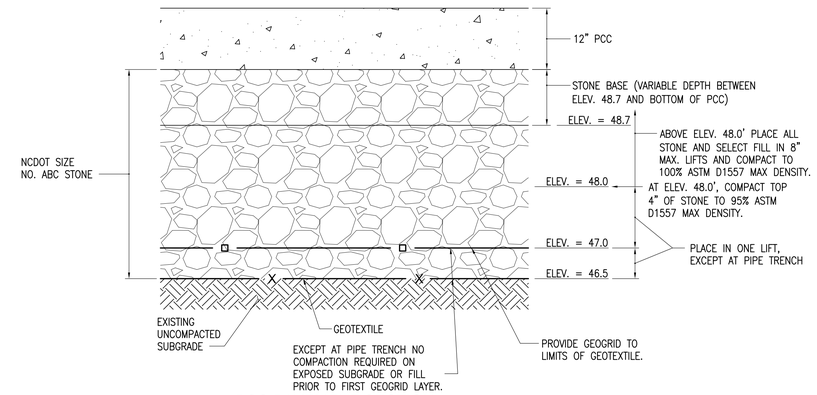


## PCC PAVEMENT SECTION

N.T.S.

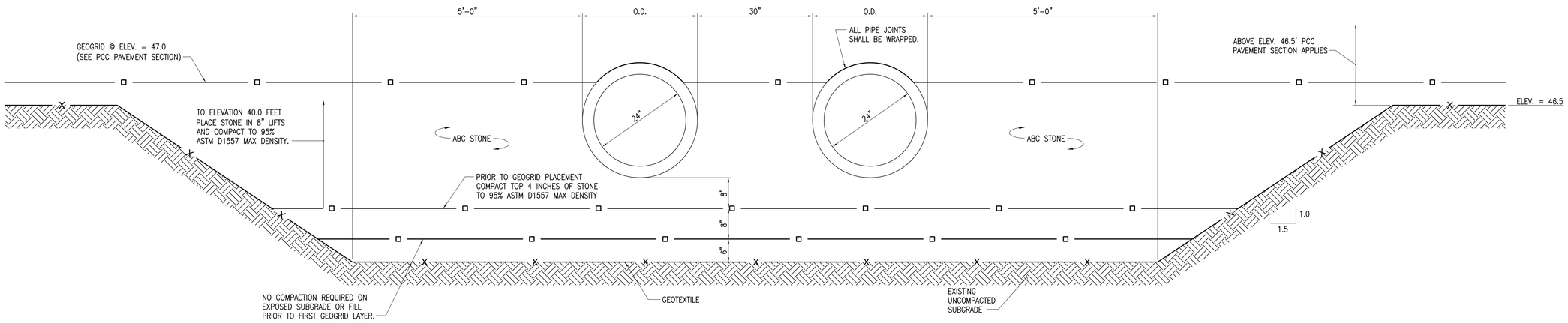


## PIPE TRENCH DETAIL

N.T.S.

## PIPE TRENCH CONSTRUCTION SEQUENCE

1. EXCAVATE TO THE DEPTH INDICATED WITHIN THE PAVEMENT SIDELINES, CREATING A HORIZONTAL SURFACE THAT IS LEVEL AND FREE OF OBJECTS WHICH COULD PROTRUDE INTO THE GEOTEXTILE.
2. DO NOT COMPACT THE EXPOSED SUBGRADE. PLACE GEOTEXTILE, OVERLAPPING EDGES 36 INCHES.
3. PLACE FILL IN ONE LIFT TO ELEVATION OF FIRST GEOGRID LAYER.
4. PLACE GEOGRID AND STONE FILL IN ONE LIFT TO ELEVATION OF SECOND GEOGRID LAYER.
5. COMPACT SURFACE AS INDICATED, PLACE GEOGRID.
6. PLACE OVERLYING MATERIAL AS INDICATED.

NORTH CAROLINA PROFESSIONAL SEAL 5302 ENGINEER C. ALLAN BAMFORTH, JR.
11/13/14

CG504

C. ALLAN BAMFORTH, JR.
ENGINEER–SURVEYOR, LTD.
NORFOLK, VIRGINIA

DEPARTMENT OF THE NAVY — NAVAL FACILITIES ENGINEERING COMMAND

MARINE CORPS BASE
CAMP LEJEUNE, NORTH CAROLINA

DES. CAB
DR. CAD
CHK. ALB
SUBMITTED BY:
DESIGN DIR.
APPROVED: PWO OR OICC — DATE
SATISFACTORY TO: — DATE

CONSTRUCT SR-10 AHA

DETAILS

| SIZE | CODE IDENT. NO | NAVFAC DRAWING NO. |
|---|---|---|
| F | 80091 | 60015546 |
| | | CONST. CONTR. NO. N40085-15-B-0008 |

SCALE: NONE — SPEC. 05-15-0008 — SHEET 16 OF 21

| REVISIONS | | | |
|---|---|---|---|
| SYM | | DATE | APPROVED |
| | | | |

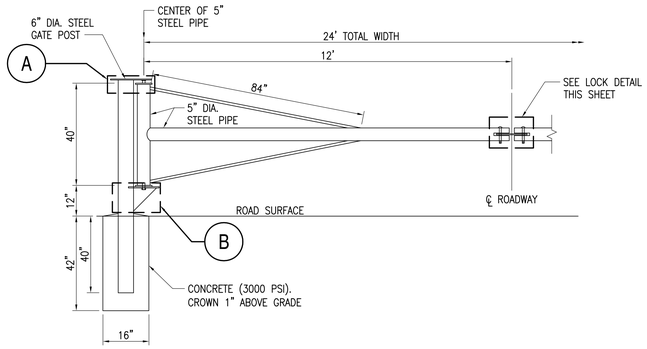


## SECURITY BARRIER ELEVATION

N.T.S.

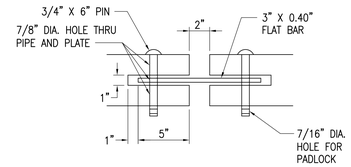


## LOCK DETAIL

N.T.S.

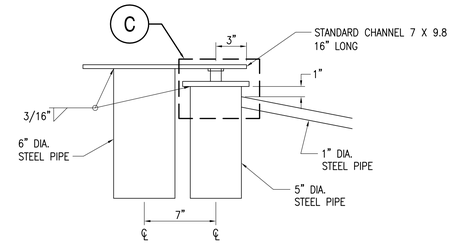


## A DETAIL

N.T.S.

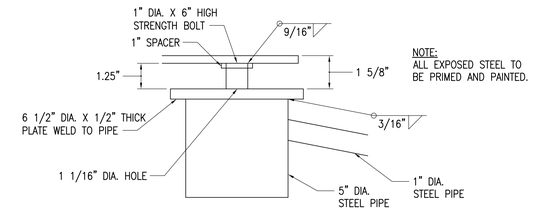


NOTE:
ALL EXPOSED STEEL TO BE PRIMED AND PAINTED.

## C DETAIL

N.T.S.

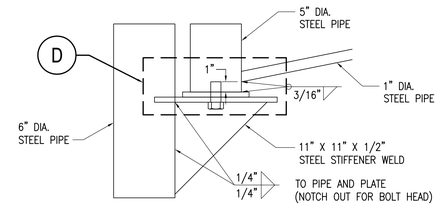


## B DETAIL

N.T.S.

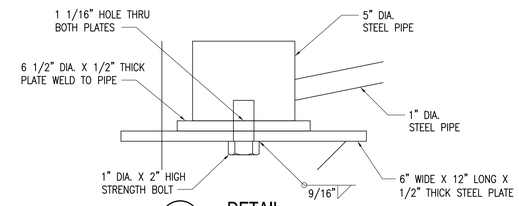


## D DETAIL

N.T.S.

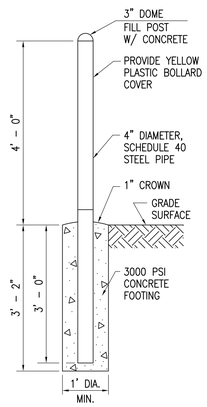


## BOLLARD DETAIL

N.T.S.

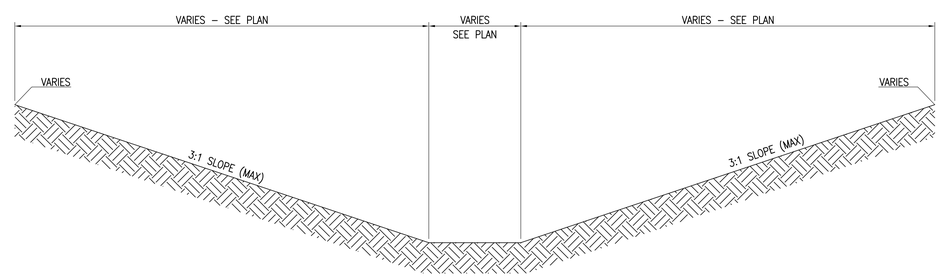


## DITCH SECTION

N.T.S.

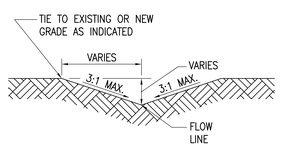


## SWALE

N.T.S.

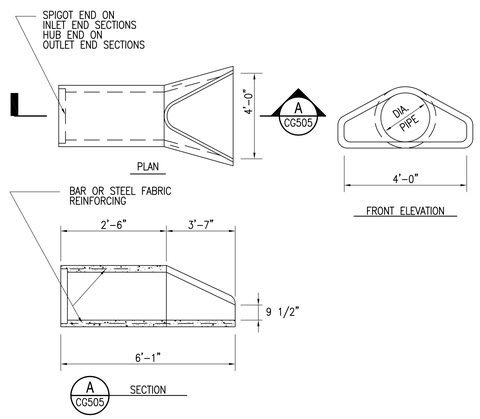


## FLARED END SECTION

N.T.S.

11/13/14

# CG505

C. ALLAN BAMFORTH, JR.
ENGINEER–SURVEYOR, LTD.
NORFOLK, VIRGINIA

DEPARTMENT OF THE NAVY — NAVAL FACILITIES ENGINEERING COMMAND

MARINE CORPS BASE
CAMP LEJEUNE, NORTH CAROLINA

DES. CAB
DR. CAD
CHK. ALB
SUBMITTED BY:
DESIGN DIR.
APPROVED: PWO OR OICC — DATE
SATISFACTORY TO: — DATE

CONSTRUCT SR-10 AHA

DETAILS

| SIZE | CODE IDENT. NO | NAVFAC DRAWING NO. |
|---|---|---|
| F | 80091 | 60015547 |
| | | CONST. CONTR. NO. N40085-15-B-0008 |

SCALE: NONE — SPEC. 05-15-0008 — SHEET 17 OF 21

| REVISIONS | | | |
|---|---|---|---|
| SYM | | DATE | APPROVED |
| | | | |

# GENERAL NOTES:

GENERAL:

1. ALL WORK SHALL COMPLY WITH THE CODES LISTED BELOW AND IN THE SPECIFICATIONS.

2. THE CONTRACTOR SHALL VERIFY ALL DRAWINGS FOR COORDINATION BETWEEN TRADES, LOCATE SLOTS, SLEEVES AND TRENCHES AS REQUIRED FOR MECHANICAL TRADES. PROVIDE AND INSTALL ANCHORS, INSERTS, HANGERS, ETC. AS REQUIRED FOR VARIOUS TRADES.

3. UNDER NO CIRCUMSTANCES SHALL REPRODUCTION OF CONTRACT DRAWINGS BE USED AS SHOP DRAWINGS.

4. THE CONTRACTOR SHALL SUBMIT SHOP DRAWINGS OF REINFORCEMENT DETAILS FOR APPROVAL BEFORE PROCEEDING WITH THE WORK. THE CONTRACTOR SHALL CHECK ALL DIMENSIONS AND ACCEPT FULL RESPONSIBILITY FOR DIMENSIONAL CORRECTNESS.

5. THE CONTRACTOR SHALL PROVIDE ALL TEMPORARY GUYING AND BRACING REQUIRED TO ERECT AND HOLD THE STRUCTURE IN PROPER ALIGNMENT UNTIL ALL STRUCTURAL WORK AND CONNECTIONS HAVE BEEN COMPLETED.

6. LOADING APPLIED TO THE STRUCTURE DURING THE PROCESS OF CONSTRUCTION SHALL NOT EXCEED THE SAFE LOAD-CARRYING CAPACITY OF THE STRUCTURAL MEMBERS. THE LIVE LOADINGS USED IN THE DESIGN OF THIS STRUCTURE ARE INDICATED IN THE "DESIGN CRITERIA NOTES". DO NOT APPLY ANY CONSTRUCTION LOADS UNTIL ALL STRUCTURAL FRAMING IS PROPERLY CONNECTED TOGETHER AND UNTIL ALL TEMPORARY BRACING IS IN PLACE.

7. TYPICAL DETAILS AND GENERAL NOTES APPLY TO ALL PARTS OF THE JOB EXCEPT WHERE SPECIFICALLY DETAILED OR NOTED OTHERWISE.

8. STRUCTURAL DRAWINGS SHOW ONLY THE BASIC STRUCTURAL FRAMING. REFER TO CIVIL DRAWINGS FOR NON-STRUCTURAL ITEMS WHICH REQUIRE SPECIAL PROVISIONS DURING THE CONSTRUCTION OF THE STRUCTURAL FRAME.

9. THE CONTRACTOR SHALL INFORM THE CONTRACTING OFFICER IN WRITING OF ANY DEVIATION FROM THE CONTRACT DOCUMENTS. THE CONTRACTOR SHALL NOT BE RELIEVED OF THE RESPONSIBILITY OF SUCH DEVIATION BY THE CONTRACTING OFFICER REVIEW OF SHOP DRAWINGS, PRODUCT DATA, ETC. UNLESS THE CONTRACTOR HAS SPECIFICALLY INFORMED THE CONTRACTING OFFICER OF SUCH DEVIATION AT THE TIME OF SUBMISSION, AND THE CONTRACTING OFFICER HAS GIVEN WRITTEN APPROVAL TO THE SPECIFIC DEVIATION.

FOUNDATION:

1. FOUNDATIONS FOR THIS STRUCTURE HAVE BEEN DESIGNED IN ACCORDANCE WITH THE RECOMMENDATIONS IN THE SUBSURFACE EXPLORATION REPORT, PREPARED BY CATLIN ENGINEERS AND SCIENTISTS, AND DATED JULY 29, 2014

2. THE ENTIRE STRUCTURE SHALL BE FOUNDED ON VERY WELL COMPACTED STRUCTURAL FILL MATERIAL. DESIGN BEARING PRESSURE = 1000 P.S.F.

3. NO FOUNDATION WORK SHALL BE INSTALLED UNTIL ALL FOUNDATION WORK HAS BEEN COORDINATED WITH ADJACENT UNDERGROUND UTILITIES, ETC. FOOTINGS SHALL BE LOWERED WHERE REQUIRED.

4. NO UNBALANCED BACKFILLING SHALL BE DONE AGAINST FOUNDATION WALLS UNLESS WALLS ARE SECURELY BRACED AGAINST OVERTURNING.

CONCRETE WORK:

1. UNLESS OTHERWISE NOTED OR DETAILED ALL CONCRETE WORK SHALL BE IN ACCORDANCE WITH THE AMERICAN CONCRETE CODE (A.C.I. 318) AND ITS LATEST AMENDMENTS AND THE SPECIFICATIONS FOR STRUCTURAL CONCRETE FOR BUILDINGS (ACI 301).

2. UNLESS SPECIFIED OTHERWISE, ALL CONCRETE SHALL BE NORMAL WEIGHT AGGREGATE CONCRETE HAVING A MINIMUM COMPRESSIVE STRENGTH OF 4000 PSI AT THE AGE OF 28 DAYS FOR OTHER CONCRETE. CONCRETE EXPOSED TO WEATHER SHALL BE AIR ENTRAINED.

3. ALL REINFORCING SHALL CONFORM TO ASTM A-615, GRADE 60.

4. WELDED WIRE FABRIC SHALL CONFORM TO ASTM A-185 AND PROVIDED IN FLAT SHEETS. WELDED WIRE MESH SHALL BE PROPERLY SUPPORTED PRIOR TO PLACING CONCRETE. HOOKING OF MESH IS NOT PERMITTED.

5. UNLESS OTHERWISE NOTED, REINFORCING STEEL MARKED CONTINUOUS (CONT.) SHALL BE LAPPED AT SPLICES AS FOLLOWS:
WALLS:

SLABS, SPREAD FOOTING AND WALLS:
TOP REINFORCING:
#7 AND GREATER: 72 BAR DIAMETERS
#6 AND SMALLER: 44 BAR DIAMETERS

BOTTOM REINFORCING:
#7 AND GREATER: 56 BAR DIAMETERS
#6 AND SMALLER: 34 BAR DIAMETERS

FOR LAPS AT CORNERS, REFER TO TYPICAL DETAIL.

6. ALL REINFORCING STEEL SHALL BE HELD SECURELY IN PLACE TO PREVENT DISLOCATION DURING THE POURING OPERATION. SLAB REINFORCING BARS SHALL BE SUPPORTED ON HIGH CHAIRS AND BAR SPACERS OF SUITABLE DESIGN, OR CONCRETE BLOCKS HAVING THE SAME MINIMUM COMPRESSIVE STRENGTH OF THE CONCRETE SLAB.

7. DETAILING OF ALL CONCRETE STEEL REINFORCEMENT SHALL BE IN ACCORDANCE WITH THE MANUAL OF STANDARD PRACTICE FOR DETAILING REINFORCED CONCRETE STRUCTURES (A.C.I. 315).

8. NO CONCRETE SHALL BE PLACED UNTIL ALL EMBEDDED WORK HAS BEEN INSTALLED, TESTED AND INSPECTED.

9. EXCEPT AS OTHERWISE SHOWN MINIMUM PROTECTION (CONCRETE COVER) FOR REINFORCING STEEL SHALL BE AS FOLLOWS:

CONCRETE SURFACES EXPOSED TO SOIL:
3" FOR FOOTINGS
2" FOR WALLS

CONCRETE SURFACES EXPOSED TO WEATHER:
2" FOR WALLS AND SLABS

10. ALL EXPOSED CONCRETE EDGES SHALL BE CHAMFERED.

STRUCTURAL STEEL:

1. ALL STRUCTURAL STEEL SHALL BE NEW, CLEAN AND STRAIGHT. STEEL SHAPES SHALL CONFORM TO ASTM 36 UNLESS OTHERWISE NOTED.

2. WELDING SHALL COMPLY WITH THE "STRUCTURAL WELDING CODE" PREPARED BY THE A.W.S., MINIMUM WELD SIZE SHALL BE 3/16" FILLET WELD, ELECTRODES SHALL BE E70XX.

3. ALL STRUCTURAL STEEL AND HEADED STUDS SHALL BE HOT-DIPPED GALVANIZED IN ACCORDANCE WITH ASTM A123 OR ASTM A153 AS APPLICABLE. APPLY ASTM A780 ZINC RICH PAINT TO DAMAGED GALVANIZED COATINGS AND WELDS WHERE APPLICABLE.

HANDRAILS/GUARDRAILS:

1. PROVIDE STEEL HANDRAILS, STRUCTURAL PIPE CONFORMING TO ASTM A53, X-STRONG. RAILINGS TO BE HOT-DIP GALVANIZED. DEBURR ALL PIPING PRIOR TO INSTALLATION.

2. FABRICATE JOINT POSTS, RAIL AND CORNERS BY ONE OF THE FOLLOWING METHODS:

A. FLUSH-TYPE RAIL FITTINGS OF COMMERCIAL STANDARD, WELDED AND GROUND SMOOTH WITH RAILING SPLICE LOCKS SECURED WITH 3/8" HEXAGONAL-RECESSED-HEAD SETSCREWS.

B. MITERED AND WELDED JOINTS MADE BY FITTING POST INTO TOP RAIL AND INTERMEDIATE RAIL TO POST, MITERING CORNERS, GROOVE WELDING JOINTS, AND GRINDING SMOOTH. BUTT RAILING SPLICES AND REINFORCE THEM BY A TIGHT FITTING INTERIOR SLEEVE NOT LESS THAN 6" LONG.

C. RAILINGS MAY BE BENT AT CORNERS IN LIEU OF JOINTING, PROVIDED BENDS ARE MADE IN SUITABLE JIGS AND THE PIPE IS NOT CRUSHED.

WOOD:

4. ALL TIMBER MEMBERS SHALL BE PRESSURE TREATED CONFORMING TO AWPA STANDARD U1 FOR A SERVICE CONDITION USE OF UC3B.

5. ALL LUMBER AND TIMBER FOR BUMPER SYSTEM CONSTRUCTION SHALL BE SOUTHERN PINE, NO. 1 GRADE. MINIMUM DESIGN VALUES SHALL BE AS INDICATED IN "DESIGN VALUES FOR WOOD CONSTRUCTION", A SUPPLEMENT TO THE "NATIONAL DESIGN SPECIFICATION FOR WOOD CONSTRUCTION", 2005 EDITION, BY THE NATIONAL FOREST PRODUCTS ASSOCIATION. PRESERVATIVE TREATMENT SHALL BE IN ACCORDANCE WITH THE SPECIFICATIONS.

6. STORE LUMBER ON LEVEL RACKS AND KEEP FREE OF GROUND TO AVOID WARPING. STACK TO INSURE PROPER VENTILATION AND DRAINAGE.

SAFETY:

1. IN ACCORDANCE WITH GENERALLY ACCEPTED CONSTRUCTION PRACTICES, CONTRACTOR WILL BE SOLELY AND COMPLETELY RESPONSIBLE FOR CONDITION OF JOB SITE INCLUDING SAFETY OF ALL PERSONS AND PROPERTY DURING PERFORMANCE OF THE WORK.

DESIGN CRITERIA:

1. INTERNATIONAL BUILDING CODE - 2012 EDITION.

2. REFERENCED CODES: ACI 318 & COMMENTARY, BUILDING CODE FOR REINF. CONCRETE; ANSI/AISC 360-05, "SPECIFICATION FOR STRUCTURAL STEEL BUILDINGS.

DESIGN LOADS:

DESIGN LIVE LOADS USED IN THE DESIGN OF THIS STRUCTURE ARE AS FOLLOWS:
1. UNIFORM LIVE LOADS:
SLAB: 250 PSI

2. WIND LOADS:
ULTIMATE DESIGN WIND SPEED: 140 MPH, EXPOSURE C

3. SEISMIC LOADS:
SEISMIC DESIGN CATEGORY: C
SITE CLASS: E
SPECTRAL RESPONSE COEFFICIENT:
Sds = 0.15g
Sd1 = 0.07g
IMPORTANCE FACTOR I = 1.0

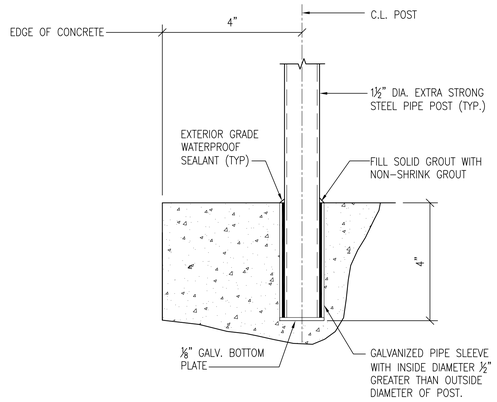


## RAIL POST ANCHOR DETAIL

NOT TO SCALE

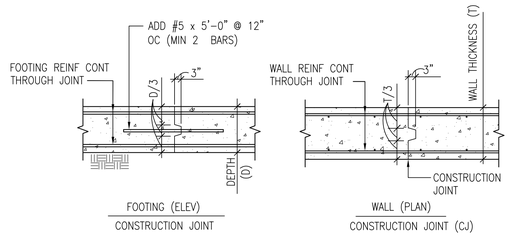


## TYPICAL CONTROL JOINT DETAILS

NOT TO SCALE

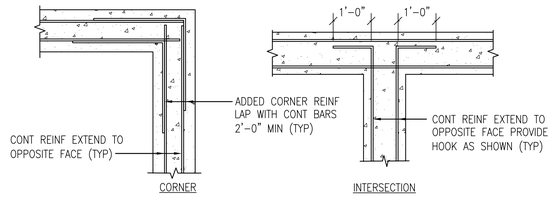


## TYPICAL DETAIL SHOWING CONTINUOUS REINFORCING AT CORNERS AND INTERSECTIONS

NOT TO SCALE

## ABBREVIATIONS LIST

| | | | |
|---|---|---|---|
| A.B. | ANCHOR BOLT | MECH. | MECHANICAL |
| ARCH. | ARCHITECT | MFGR. | MANUFACTURER |
| BLDG. | BUILDING | OPP. | OPPOSITE |
| BOTT. | BOTTOM | P.C. | PRECAST |
| BM. | BEAM | P.S.I. | POUNDS PER SQUARE INCH |
| CLR | CLEAR | P.S.F. | POUNDS PER SQUARE FOOT |
| C.M.U. | CONCRETE MASONRY UNIT | REF. | REFERENCE |
| COL. | COLUMN | REINF. | REINFORCING |
| CONC. | CONCRETE | REQ'D. | REQUIRED |
| CONN. | CONNECTION | SCHED. | SCHEDULE |
| CONT. | CONTINUOUS | SECT. | SECTION |
| DIAG. | DIAGONAL | SF | STEPPED FOOTING |
| DIAM. | DIAMETER | SHT. | SHEET |
| DWGS. | DRAWINGS | SPECS. | SPECIFICATIONS |
| EA. | EACH | STIFF. | STIFFENER |
| E.F. | EACH FACE | STL. | STEEL |
| ELEV. | ELEVATION | T. | TOP |
| E.W. | EACH WAY | T.O. | TOP OF |
| EXIST. | EXISTING | TYP. | TYPICAL |
| EXP. | EXPANSION | U.O.N. | UNLESS OTHERWISE NOTED |
| FOUND. | FOUNDATION | VERT. | VERTICAL |
| F.O. | FACE OF | W.W.F. | WELDED WIRE FABRIC |
| FTG. | FOOTING | W/ | WITH |
| GALV. | GALVANIZED | W/O | WITH OUT |
| HORIZ. | HORIZONTAL | C.L. | CENTER LINE |
| INSUL. | INSULATION | PL. | PLATE |
| JT. | JOINT | O.C. | ON CENTER |
| LLV | LONG LEG VERTICAL | ø | DIAMETER |
| | | L | ANGLE |


NRW
CONSULTING STRUCTURAL ENGINEERS
748 LORD DUNMORE DRIVE, SUITE 101
VIRGINIA BEACH, VIRGINIA 23454
PHONE: (757) 474-0812 FAX: (757) 474-0819


NORTH CAROLINA PROFESSIONAL SEAL 022830 ENGINEER KEVIN M. ROENSBURG
11/13/14

C. ALLAN BAMFORTH, JR.
ENGINEER-SURVEYOR, LTD.
NORFOLK, VIRGINIA

DEPARTMENT OF THE NAVY — NAVAL FACILITIES ENGINEERING COMMAND

MARINE CORPS BASE
CAMP LEJEUNE, NORTH CAROLINA

DES. LSP
DR. TTA
CHK. KMR
SUBMITTED BY:
DESIGN DIR.
APPROVED: PWO OR OICC DATE
SATISFACTORY TO: DATE

CONSTRUCT SR-10 AHA

GENERAL NOTES AND DETAILS

| SIZE | CODE IDENT. NO | NAVFAC DRAWING NO. |
|---|---|---|
| F | 80091 | 60015548 |
| | | CONST. CONTR. NO. N40085-15-B-0008 |

SCALE: SPEC. 05-15-0008 SHEET 18 OF 21

S-001

| REVISIONS | | | |
|---|---|---|---|
| SYM | | DATE | APPROVED |
| | | | |
| | | | |

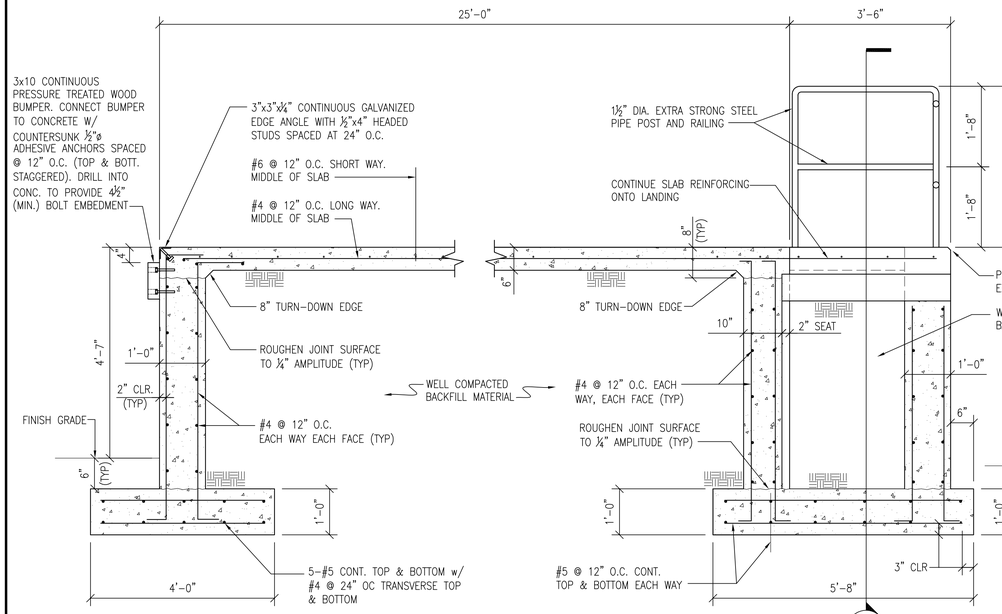


## SECTION 1

SCALE: ¾" = 1'-0"

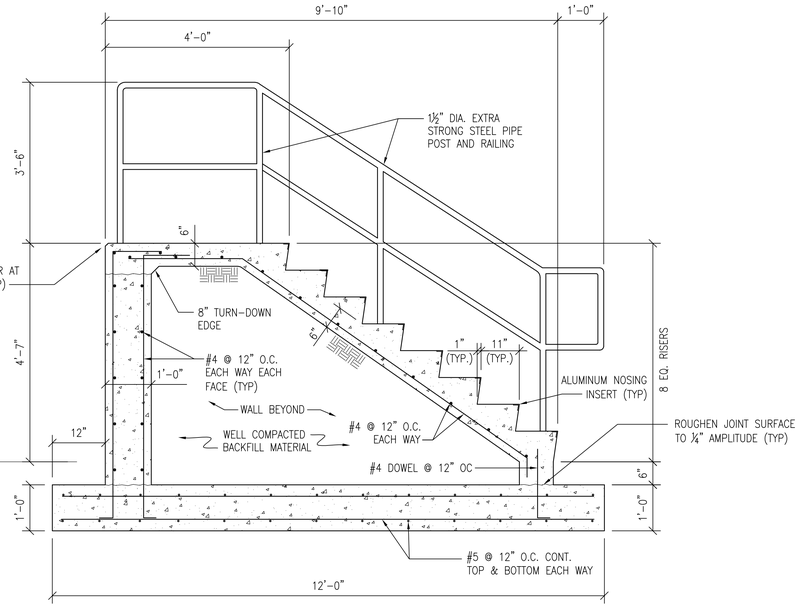


## SECTION 2

SCALE: ¾" = 1'-0"

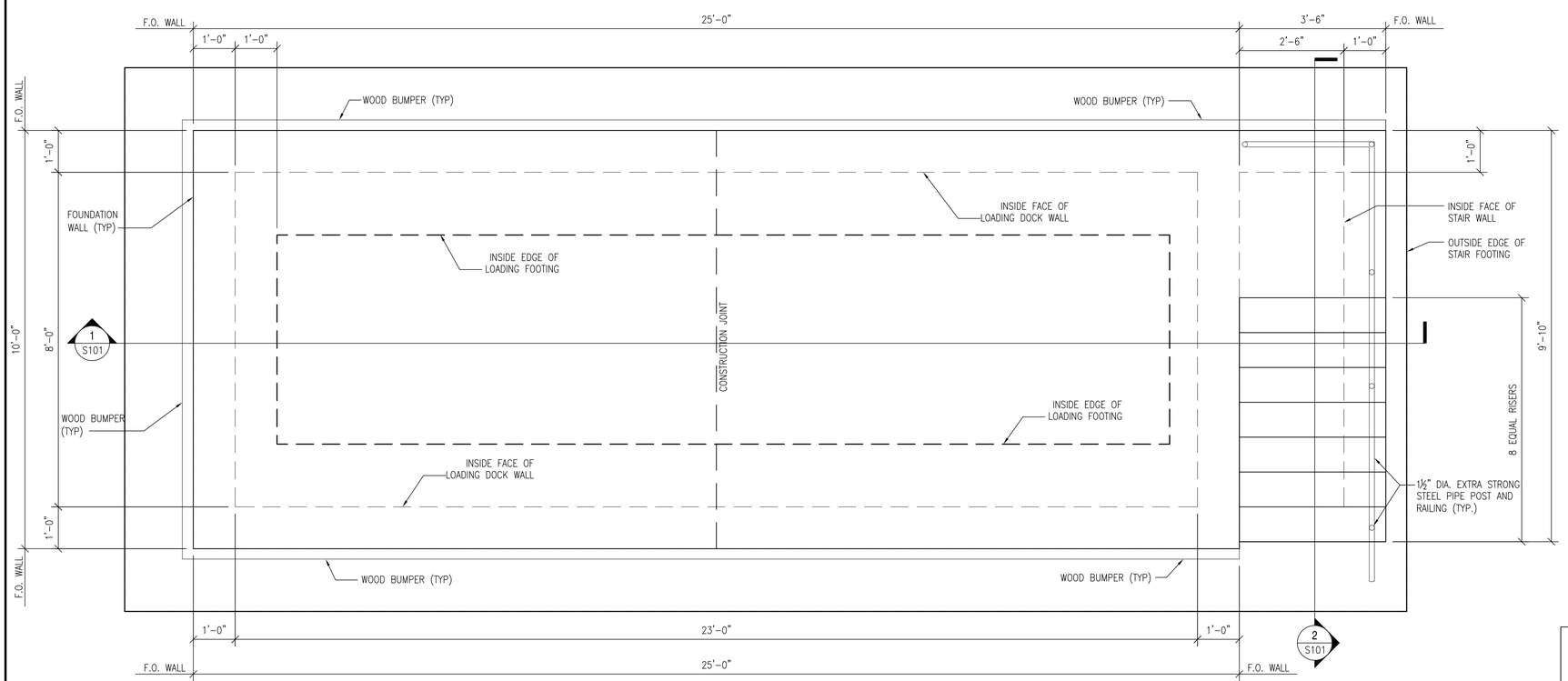


## AMMO DECK - FOUNDATION PLAN

SCALE: ¾" = 1'-0"

## PLAN NOTES:

1. AMMO DECK CONSTRUCTION SHALL CONSIST OF A 6" REINFORCED CONCRETE SLAB SPANNING TO REINFORCED CONCRETE WALLS SUPPORTED ON SHALLOW SPREAD FOOTING FOUNDATIONS.
2. FOR FINISHED GRADE ELEAVTIONS REFER TO CIVIL DRAWINGS.
3. FOR GENERAL NOTES AND TYPICAL DETIALS REFER TO SHEET S-001.

GRAPHIC SCALES

3/4"=1'-0" 0 6" 1' 2' 3' 4'

NRW
CONSULTING STRUCTURAL ENGINEERS
748 LORD DUNMORE DRIVE, SUITE 101
VIRGINIA BEACH, VIRGINIA 23464
PHONE (757) 474-0612 FAX (757) 474-0919

NORTH CAROLINA PROFESSIONAL SEAL 022830 ENGINEER KEVIN M. ROOMBURG
11/13/14

C. ALLAN BAMFORTH, JR.
ENGINEER-SURVEYOR, LTD.
NORFOLK, VIRGINIA

DES. LSP
DR. TTA
CHK. KMR
SUBMITTED BY:
DESIGN DIR.
APPROVED: PWO OR OICC DATE
SATISFACTORY TO: DATE

S-101

DEPARTMENT OF THE NAVY — NAVAL FACILITIES ENGINEERING COMMAND
MARINE CORPS BASE
CAMP LEJEUNE, NORTH CAROLINA

CONSTRUCT SR-10 AHA
PLAN AND SECTIONS

| SIZE | CODE IDENT. NO | NAVFAC DRAWING NO. |
|---|---|---|
| F | 80091 | 60015549 |
| | | CONST. CONTR. NO. N40085-15-B-0008 |

SCALE: SPEC. 05-15-0008 SHEET 19 OF 21

| REVISIONS | | | |
|---|---|---|---|
| SYM | | DATE | APPROVED |
| | | | |
| | | | |

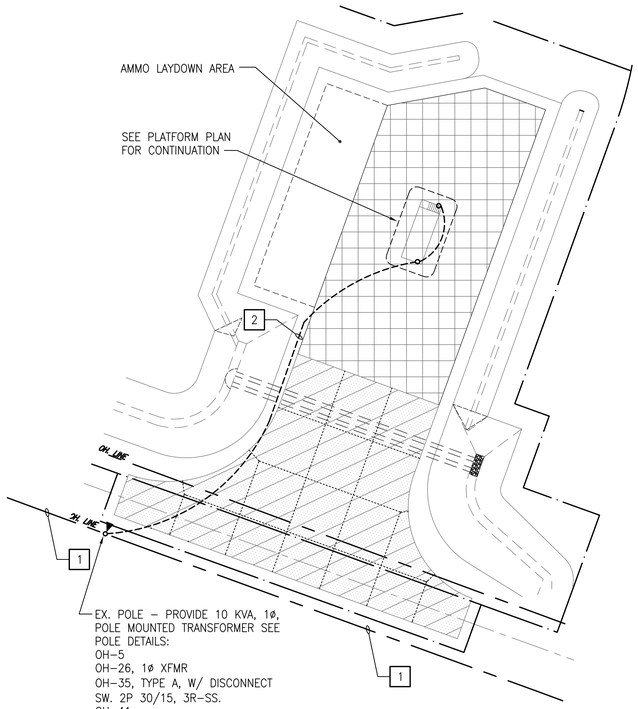


## NOTES:

1. PROVIDE LINE WEIGHTS ON OVERHEAD CONDUCTORS. EXISTING SPANS ~ 300', EXISTING OVERHEAD 2 PHASE + GND. PROVIDE ON LINES ACROSS ENTIRE FRONT OF SITE.
2. UNDERGROUND ELECTRIC – BURIED 6" ABOVE GEOTEXTILE/GEOGRID, IN SAND BASE 6" EACH SIDE AND TOP OF CABLE. COORDINATE WITH SITE CLEARING AND GEOTEXTILE/GEOGRID @ 24" BG. SEE DETAIL – THIS SHEET.

## SITE PLAN – ELECTRICAL

1"= 30'–0" 0 15' 30' 60' 90'

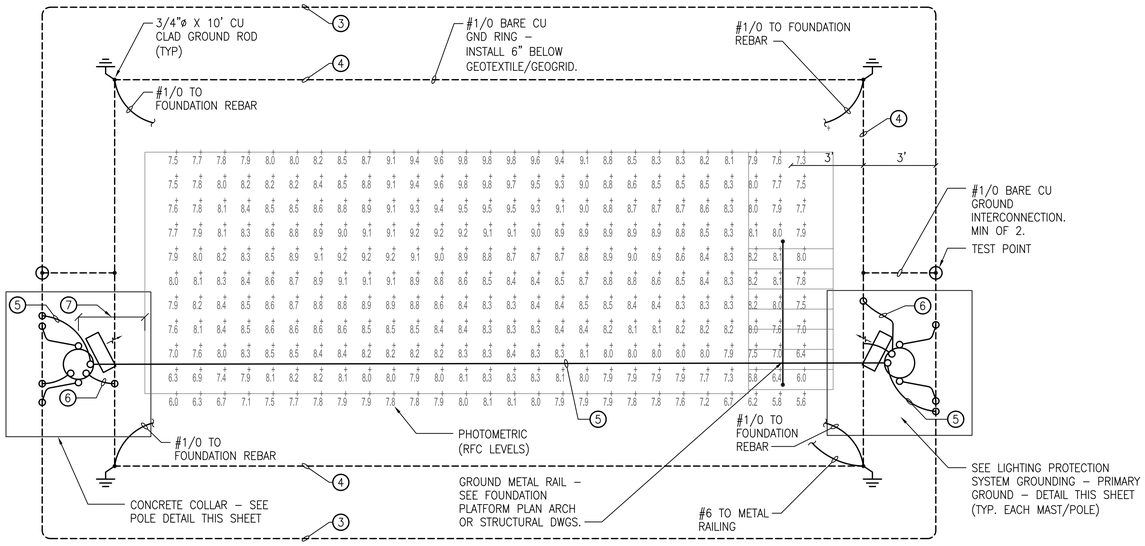


## NOTES:

1. ALL GROUNDS NOTED SHALL BE #1/0 AWG, CU WITH NO INDIVIDUAL STRAND OF THE CABLE SMALLER THAN #17 AWG, CU (.045" DIA.).
2. ALL GROUND CONNECTIONS SHALL BE EXOTHERMIC WELD CONNECTED.
3. PRIMARY GROUNDING SYSTEM – #1/0 BARE CU – GROUND LOOP – 30"BG. (6" BELOW GEOTEXTILE/GEOGRID MAT.)
4. SECONDARY GROUNDING SYSTEM – #1/0 BARE CU – GROUND LOOP – 30"BG. (6" BELOW GEOTEXTILE/GEOGRID MAT.)
5. PROVIDE CATENARY (OVERHEAD WIRE) SYSTEM 1#1/0 AWG, CU (OR CU COATED STEEL) CABLE, BETWEEN POLE MASTS AT 30' AFG. DRAW AND SUPPORT TAUT. CONNECT TO PRIMARY GROUND GRID.
6. #6 FIXTURE GROUND TO SECONDARY GROUND LOOP.
7. 6' OFF PAD FOUNDATION. TYPICAL FOR BOTH POLES.

## PLATFORM PLAN

3/8" = 1'–0" 0 1' 2' 3' 4' 6' 8'

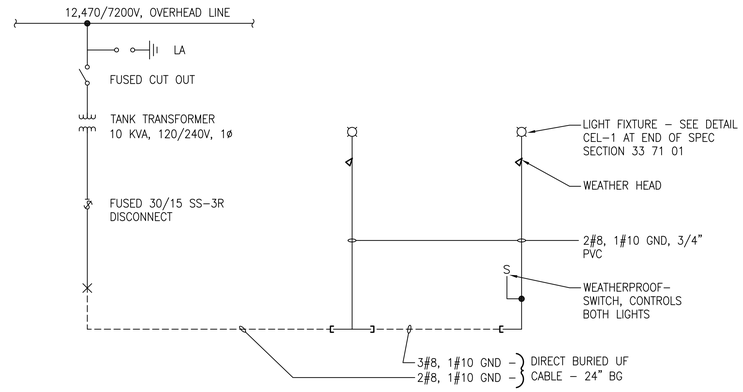


## POWER RISER DIAGRAM

NOT TO SCALE

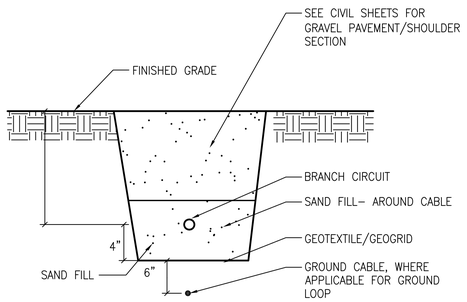


## TYPICAL DIRECT BURIED CONDUIT DETAIL

NOT TO SCALE

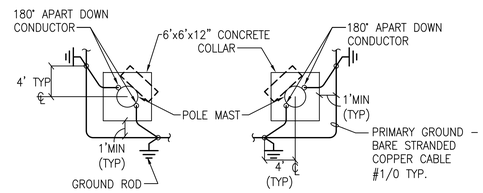


## LIGHTNING PROTECTION SYSTEM GROUNDING – PRIMARY GROUND DETAIL

NOT TO SCALE

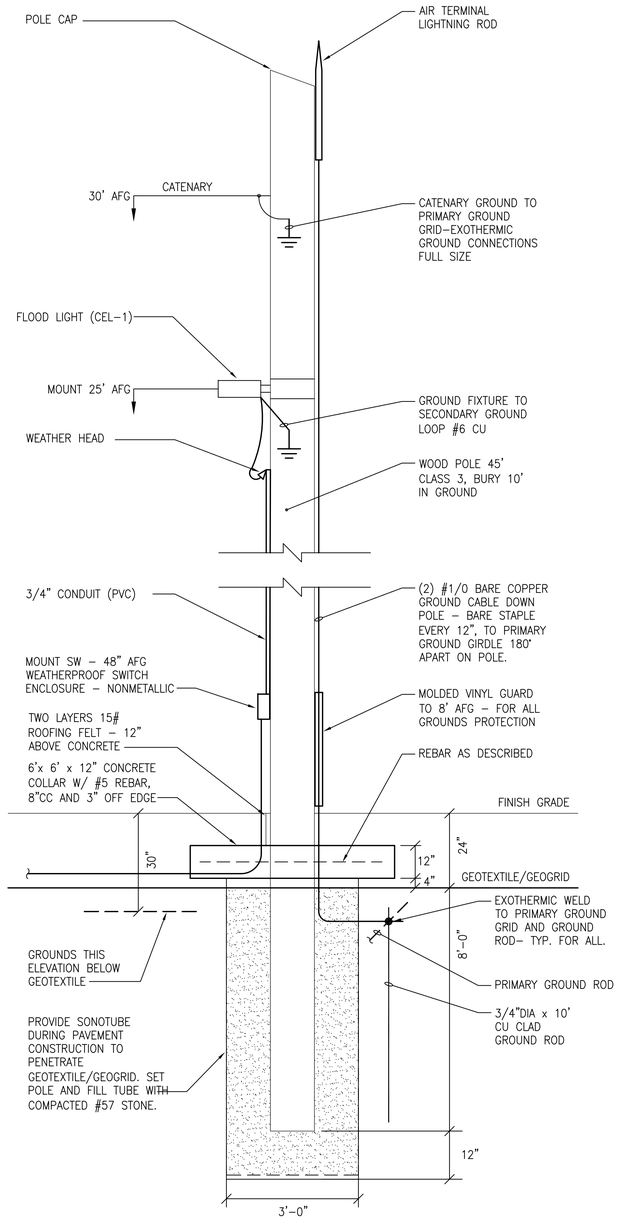


## POLE DETAIL

NOT TO SCALE

AFG = ABOVE FINISHED GRADE

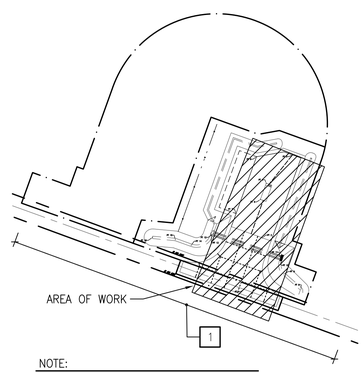


NOTE:

1. PROVIDE LINE WEIGHT PROTECTION ACROSS FRONT OF SITE.

## KEY PLAN

NOT TO SCALE

CHERWA-EHLING ENGINEERING, PC
CONSULTING ENGINEERS
600 LYNNHAVEN PARKWAY, VIRGINIA BEACH VA 23452
PHONE NO. (757) 340-6571 FAX NO. (757) 463-1871
E-MAIL Address: cee@cherwaehling.com

NORTH CAROLINA PROFESSIONAL ENGINEER SEAL 19077 11-13-14 CHRIS M. CHERWA

| | |
|---|---|
| C. ALLAN BAMFORTH, JR. ENGINEER–SURVEYOR, LTD. NORFOLK, VIRGINIA | E-101 |
| DEPARTMENT OF THE NAVY — NAVAL FACILITIES ENGINEERING COMMAND | MARINE CORPS BASE CAMP LEJEUNE, NORTH CAROLINA |
| DES. LMC | |
| DR. ACN | CONSTRUCT SR-10 AHA |
| CHK. LMC | SITE PLAN AND DETAILS |
| SUBMITTED BY: | |
| DESIGN DIR. | |
| APPROVED: PWO OR OICC — DATE | SIZE F — CODE IDENT. NO 80091 — NAVFAC DRAWING NO. 60015550 |
| SATISFACTORY TO: — DATE | CONST. CONTR. NO. N40085-15-B-0008 |
| | SCALE: GRAPHIC — SPEC. 05-15-0008 — SHEET 20 OF 21 |

| REVISIONS | | | |
|---|---|---|---|
| SYM | | DATE | APPROVED |
| | | | |
| | | | |

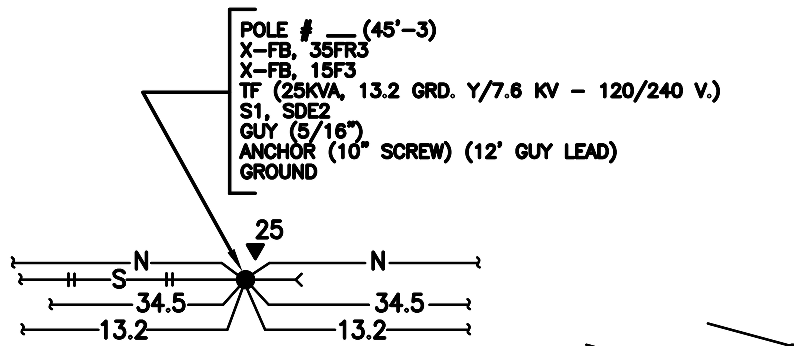


PLAN VIEW

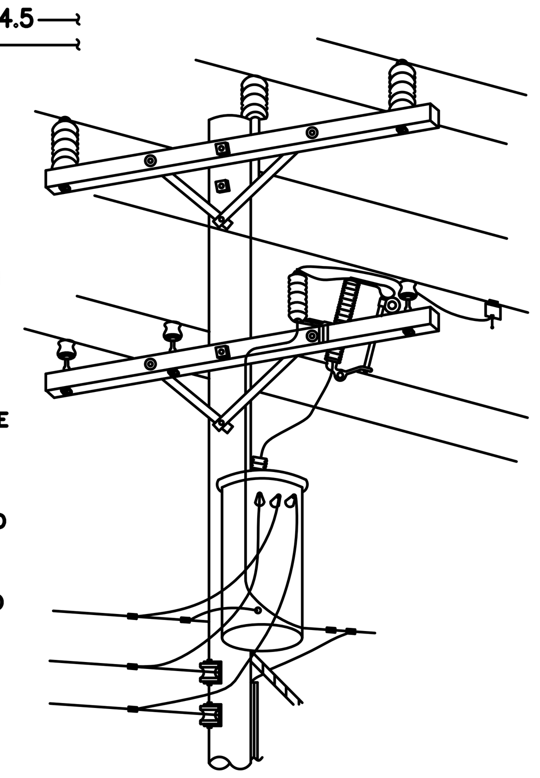

NOTES

1. THE SYMBOLS LISTED ABOVE INCLUDE MATERIALS (DESCRIBED BY OVERHEAD SKETCHES) WHICH ARE GRAPHICALLY ILLUSTRATED BY THIS PICTURE. SEE SKETCH OH–1.3A FOR EXPLANATORY NOTES.
2. EACH SKETCH CONTAINS MATERIAL ITEMS WHICH COMPRISE A PART OF EACH INDIVIDUAL SYMBOL REFERENCED BY THAT SKETCH, THESE ITEMS ARE INDICATED BY CIRCLED NUMERALS WHICH ARE IDENTIFIED BY SKETCHES OH–1.5 AND OH–1.5A.
3. SPACING REQUIREMENTS RELATED TO INDIVIDUAL COMPONENTS OF A SYMBOL ARE INDICATED ON THE APPROPRIATE SKETCH. VERTICAL SPACING REQUIREMENTS BETWEEN CIRCUITS AND/OR SYSTEMS ARE INDICATED ON SKETCH OH–1.4. ALL OTHER SEPARATIONS BETWEEN CIRCUITS, EQUIPMENT, ETC., SHALL CONFORM TO THE NATIONAL ELECTRICAL SAFETY CODE, IEEE C2.

METHOD OF SHOWING SYMBOLS

SKETCH DATE JUNE 2002 | STYLE OH–1.3

## EXPLANATORY NOTES – METHOD OF SHOWING SYMBOLS

1. SYMBOLS ARE SHOWN IN THE BASIC ORDER AS THEY APPEAR ON THE POLE, BY STARTING AT THE TOP AND WORKING DOWN.
2. NUMERALS PRECEDING THE SYMBOL INDICATE THE MINIMUM REQUIRED VOLTAGE (KV) RATING (5,15,35) OF THE ASSEMBLY, IF APPLICABLE.
3. NUMERAL FOLLOWING THE SYMBOL INDICATES THE NUMBER OF CONDUCTORS ASSOCIATED WITH THE ASSEMBLY, IF APPLICABLE.
4. NUMERAL IN PARENTHESIS FOLLOWING THE SYMBOL DENOTES THE NUMBER OF ASSEMBLIES REQUIRED, IF MORE THAN ONE.
5. DATA IN PARENTHESIS FOLLOWING THE SYMBOL PROVIDES INFORMATION RELATIVE TO THE SYMBOL.

## EXPLANATION OF SYMBOLS LISTED FOR POLE ON SKETCH OH–1.3

PROVIDE 45 FOOT LONG, CLASS 3 POLE CONTAINING:

- X–FB – 8' CROSSARM WITH FLAT BRACE
- 35FR3 – 35KV INSULATORS, FLAT (MOUNTED HORIZONTAL ON CROSSARM), RIDGE PIN (CENTER PHASE ON POLE TOP PIN), THREE CONDUCTORS
- X–FB – 8' CROSSARM WITH FLAT BRACE
- 15F3 – 15KV INSULATORS, FLAT (MOUNTED HORIZONTAL ON CROSSARM), THREE CONDUCTORS. NOTE: THIS SYMBOL CALLS FOR THREE CROSSARM MOUNTED PINS IN LIEU OF RIDGE PIN ON CENTER PHASE.
- TF – TRANSFORMER ON FLAT (HORIZONTAL) CONSTRUCTION. DATA IN PARENTHESIS DESCRIBES THE TRANSFORMER CHARACTERISTICS.
- S1 – SECONDARY, ONE CONDUCTOR, TANGENT CONSTRUCTION (COMMON NEUTRAL).
- SDE2 – SECONDARY DEADEND, TWO CONDUCTORS, OPEN WIRE
- GUY (5/16") – DOWN GUY – WIRE SIZE 5/16"
- ANCHOR (10" SCREW) – 10" SCREW TYPE ANCHOR WITH 12 FT. GUY LEAD. NOTE: NO PLATE IS INCLUDED FOR THE ANCHOR SYMBOL.
- GROUND – NO EXPLANATION NECESSARY

EXPLANATION OF NOTES/SYMBOLS

SKETCH DATE JUNE 2002 | STYLE OH–1.3A

## POLE LINE MATERIAL LIST

(1) FLAT STEEL BRACE (TWO PIECES)
(2) MACHINE BOLT, 3/8" X LENGTH NEEDED WITH WASHER, NUT AND LOCKWASHER
(3) 8' WOOD CROSSARM WITH CROSS SECTION DIMENSIONS OF 3 1/2" X 4 1/2"
(4) MACHINE BOLT, 5/8" X LENGTH NEEDED WITH WASHER, NUT AND LOCKWASHER
(5) TIMBER CONNECTOR
(6) LAGSCREW, 1/2" X 4"
(7) ANGLE STEEL BRACE (TWO PIECES)
(8) MACHINE BOLT, 1/2" X LENGTH NEEDED, WITH WASHER, NUT & LOCKWASHER
(9) DEADEND BOX
(10) STEEL PIN
(11) PIN INSULATOR
(12) GRID GAIN, USED ONLY WHEN THERE IS NO POLE GAIN
(13) ANGLE STEEL BRACE (ONE PIECE)
(14) 10' WOOD CROSSARM WITH CROSS SECTION DIMENSIONS OF 3 1/2" X 4 1/2"
(15) 5/8" EYE NUT
(16) 5/8" EYE BOLT, LENGTH AS NEEDED, WITH WASHER, NUT & LOCKWASHER
(17) EXTENSION LINK
(18) BELL TYPE SUSPENSION INSULATOR WITH CONNECTING HARDWARE
(19) STRAIN CLAMP
(20) STEEL ANGLE PIN
(21) CLUSTER MOUNTING BRACKET, STEEL
(22) TRANSFORMER GROUNDING CONNECTION
(23) STIRRUP
(24) SECONDARY LEAD SUPPORT BRACKET
(25) ADAPTER PLATE FOR CLUSTER MOUNTING
(26) CLEVIS BRACKET FOR SPOOL INSULATOR
(27) SPOOL INSULATOR
(28) U BOLT CLAMP
(29) PREFORMED GUY GRIP
(30) GUY HOOK
(31) GUY STRAIN INSULATOR
(32) GUY WIRE, SIZE AS SPECIFIED
(33) #4 WP CU. SOFT DRAWN GROUND WIRE
(34) GROUND CLAMP
(35) CONDUIT COUPLING
(36) CONDUIT BEND
(37) INSULATED BUSHING
(38) PERFORATED STRAPPING, 1–1/2" WIDE
(39) HOT LINE CLAMP
(40) FUSED CUTOUT, AS SPECIFIED
(41) SURGE ARRESTER, AS SPECIFIED
(42) POLE TOP PIN (RIDGE PIN) – 24 INCHES LONG
(43) CROSSARM ANGLE PIN
(44) ANGLE POLE TOP PIN
(45) WEATHERPROOF SOFT DRAWN WIRE–SIZE
(a) TO MATCH OR EXCEED AMPACITY OF CONNECTING CABLE, OR
(b) AT 125% OF TRANSFORMER FULL LOAD CURRENT, BUT NOT LESS THAN NO. 4 AWG

POLE LINE MATERIAL LIST

SKETCH DATE JUNE 2002 | STYLE OH–1.5

## POLE LINE MATERIAL LIST

(46) TRI–MOUNT BRACKET
(47) TERMINATOR
(48) MOUNTING BRACKET
(49) CABLE GRIP HANGER
(50) HOSE CLAMP
(51) STUD, 3/4" X 1–3/4"
(52) LINE POST INSULATOR
(53) TRIPLE INSULATOR BRACKET
(54) ANGLE CLAMP
(55) INSULATOR, LINE POST CLAMP
(56) 4' CROSSARM
(57) CROSSARM GAIN BRACKET
(58) PULLEY BRACKET
(59) WEDGE CLAMP
(60) MIDSPAN SERVICE CLAMP
(61) STUD, 7"
(62) SADDLE, ANGLE
(63) SADDLE CROSSARM
(64) FITTING, POLE TOP
(65) CONNECTOR
(66) SUSPENSION CLAMP
(67) TIE, SERVICE CABLE
(68) 54" FIBERGLASS STRAIN INSULATOR
(69) PVC RISER SHIELD
(70) PVC EXTENSION SHIELD
(71) PVC BACK PLATE
(72) 8' WOOD CROSSARM WITH CROSS SECTION DIMENSIONS OF 4 3/4" X 5 3/4"
(73) 10' WOOD CROSSARM WITH CROSS SECTION DIMENSIONS OF 4 3/4" X 5 3/4"
(74) BACK–UP CURRENT LIMITING FUSE

POLE LINE MATERIAL LIST

SKETCH DATE JUNE 2002 | STYLE OH–1.5A

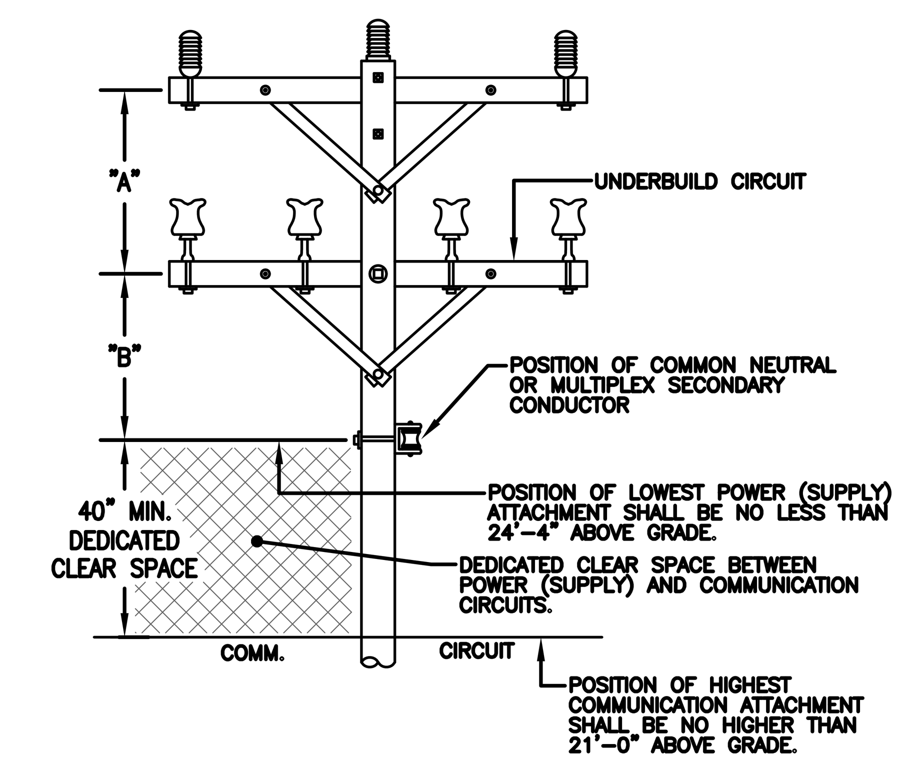


NOTE

1. FOR HORIZONTAL SPACING REQUIREMENTS FOR CONDUCTORS ON SAME SUPPORT, REFER TO THE NATIONAL ELECTRICAL SAFETY CODE, IEEE C2.

| ø–ø VOLTAGE | 0–15KV | 15–50KV |
|---|---|---|
| SPACING "A" | 40" | 48"* |
| SPACING "B" | 40" | 40" |

* PROVIDE 60" CLEARANCE WHEN OPERATING VOLTAGE OF UNDERBUILD CIRCUIT IS GREATER THAN 15KV.

BASIC VERTICAL SPACING REQUIREMENTS

SKETCH DATE JUNE 2002 | STYLE OH–1.4

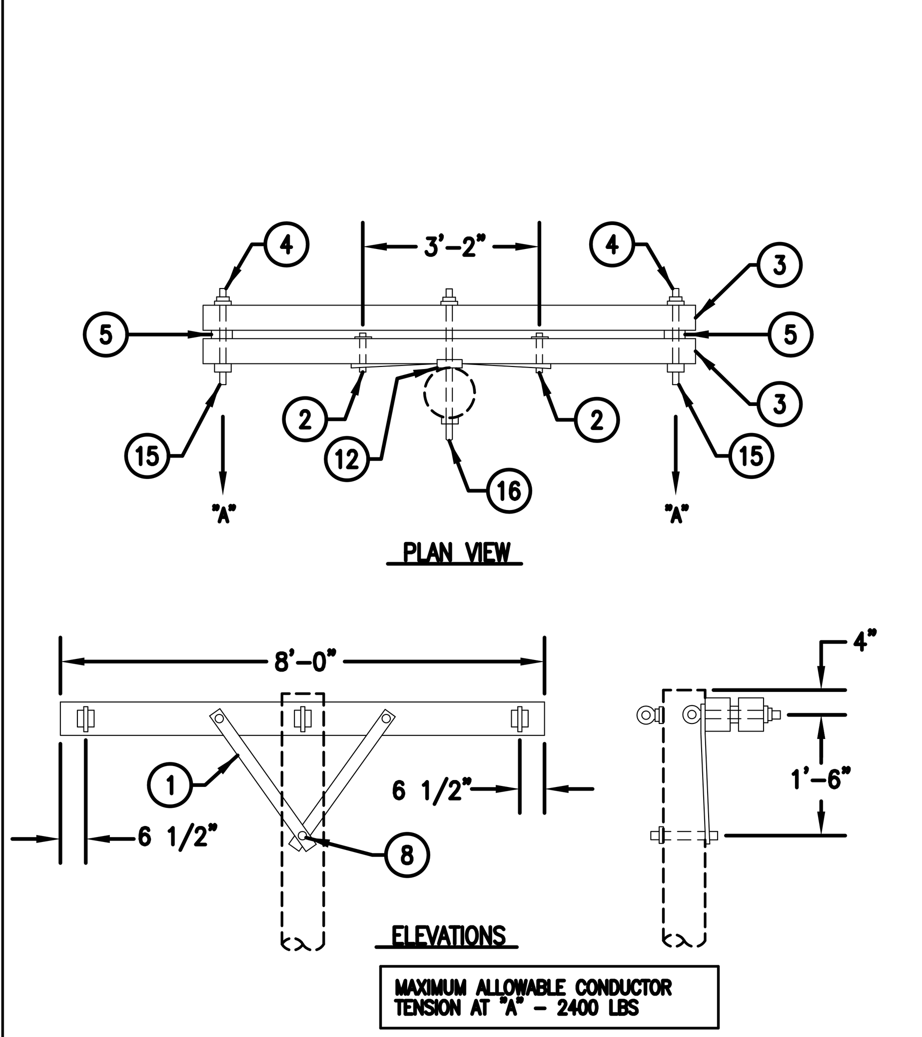


NOTE

DRAWING INDICATES SYMBOL DX–DE–FB. SUBSTITUTE (7) FOR (1) AND (8) FOR (2) ON SYMBOL DX–DE–AB.

DX–DE–FB
DX–DE–AB

SKETCH DATE JUNE 2002 | STYLE OH–5

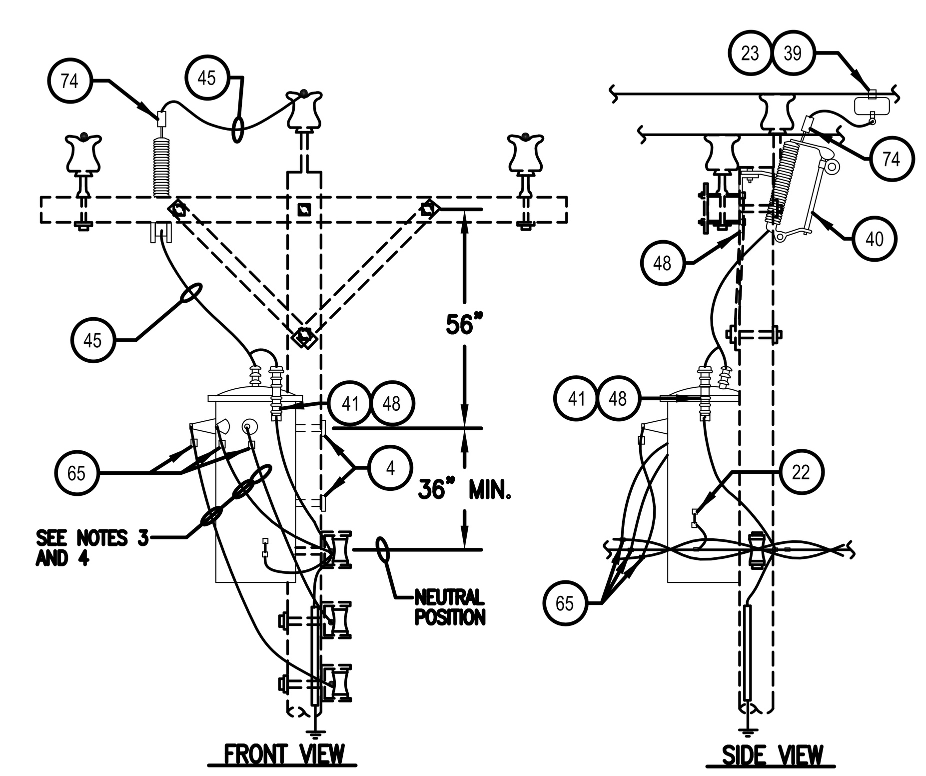


NOTES

1. DRAWING REPRESENTS TF–CL. OMIT ITEM (74) FOR SYMBOL TF.
2. MODIFY CONNECTIONS AS REQUIRED TO ACCOMODATE TRANSFORMERS WITH PRIMARY BUSHING ARRANGEMENTS OTHER THAN SHOWN.
3. WHEN TRANSFORMER PROVIDES UNDERGROUND SERVICE, SIZE SECONDARY OR SERVICE CONDUCTORS AS INDICATED.
4. WHEN TRANSFORMER SECONDARY LEADS CONNECT TO OPEN WIRE OR TRIPLEX SECONDARY, CONDUCTOR SHALL HAVE 600 VOLT INSULATION RATING AND MINIMUM AMPACITY OF 125% OF TRANSFORMER FULL LOAD SECONDARY CURRENT.

TF–CL, TF (0–15KV)

SKETCH DATE JUNE 2002 | STYLE OH–26

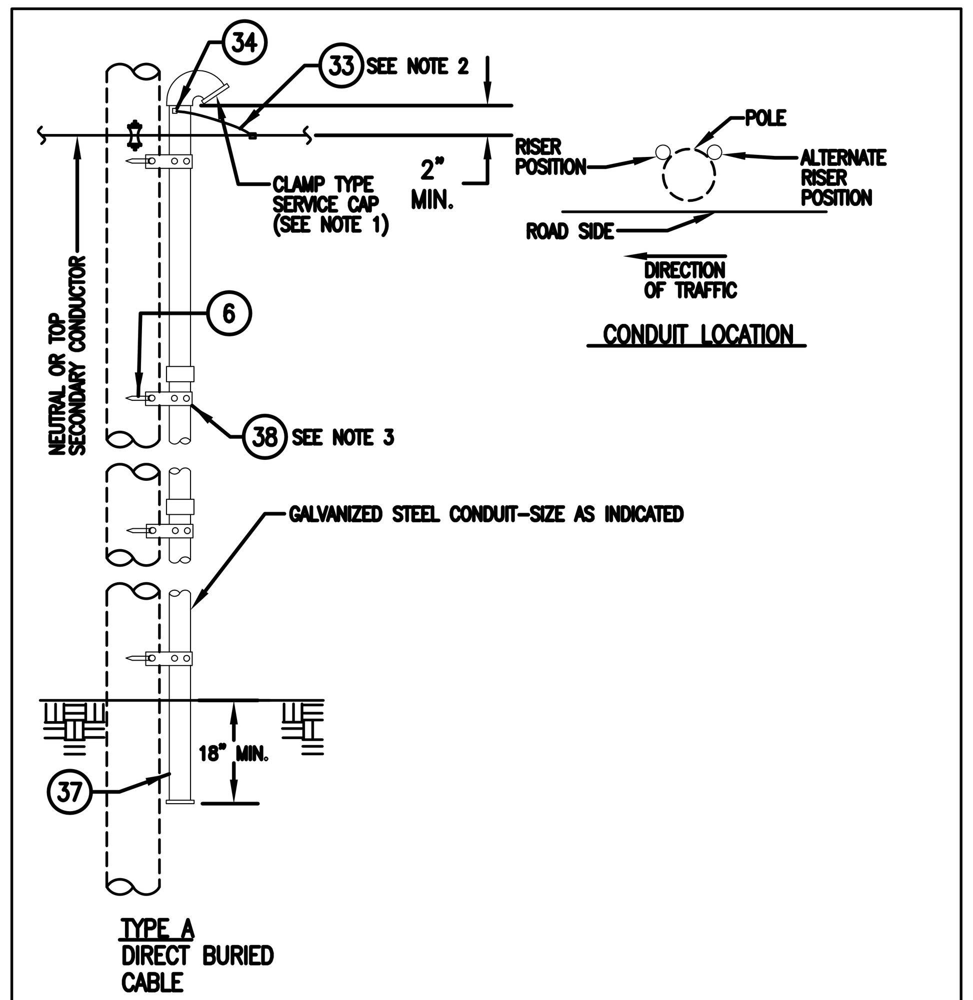


TYPE A
DIRECT BURIED CABLE

NOTES

1. ON CONDUIT RISER FOR PRIMARY CIRCUITS, ELIMINATE SERVICE CAP AND PROVIDE GROUNDING TYPE INSULATING BUSHING.
2. BOND CONDUIT TO POLE GROUND AND SYSTEM NEUTRAL (IF EXISTING). SEE GROUNDING NOTES ON SKETCH OH–41.
3. SPACE STRAPS AT MAXIMUM OF 4' INTERVALS.

CONDUIT RISER
(SIZE & TYPE AS INDICATED)

SKETCH DATE JUNE 2002 | STYLE OH–35

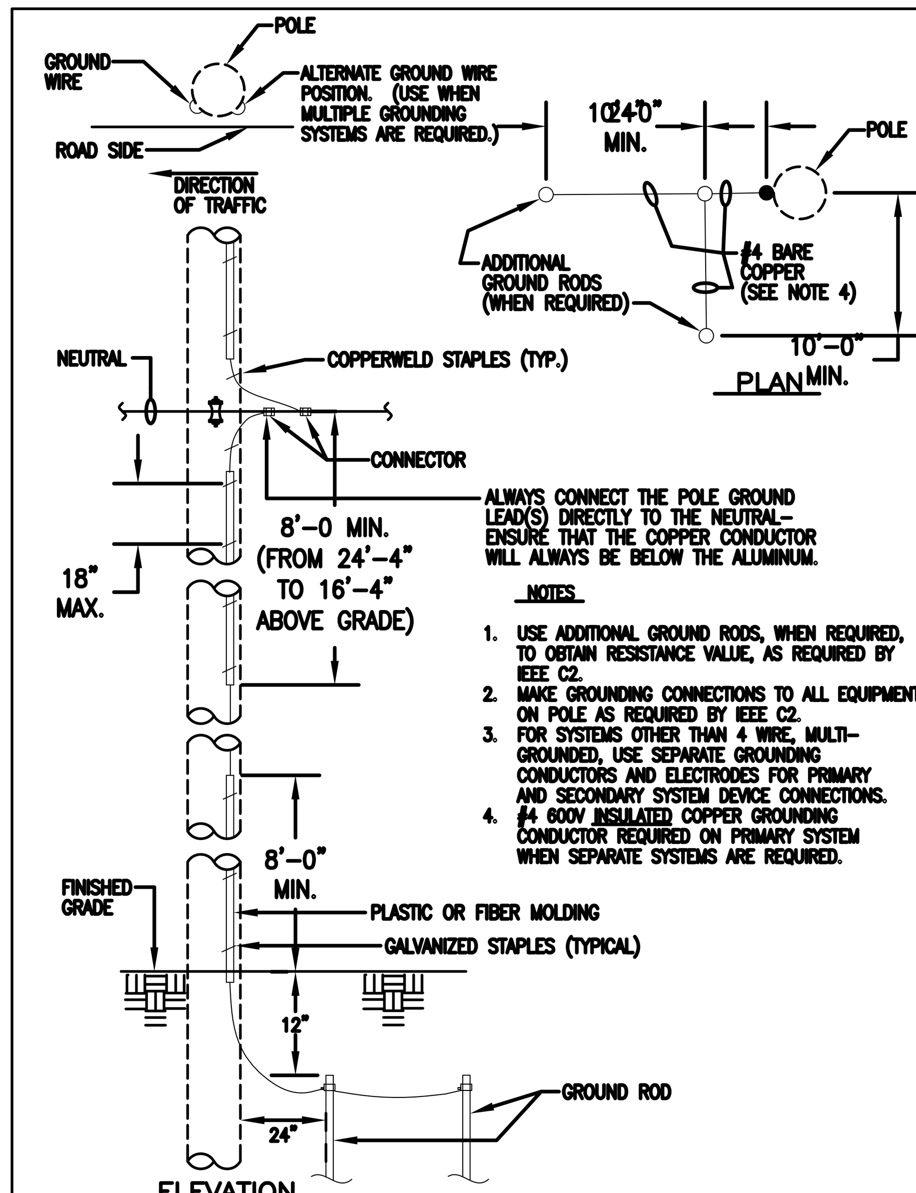


NOTES

1. USE ADDITIONAL GROUND RODS, WHEN REQUIRED, TO OBTAIN RESISTANCE VALUE, AS REQUIRED BY IEEE C2.
2. MAKE GROUNDING CONNECTIONS TO ALL EQUIPMENT ON POLE AS REQUIRED BY IEEE C2.
3. FOR SYSTEMS OTHER THAN 4 WIRE, MULTI–GROUNDED, USE SEPARATE GROUNDING CONDUCTORS AND ELECTRODES FOR PRIMARY AND SECONDARY SYSTEM DEVICE CONNECTIONS.
4. #4 600V INSULATED COPPER GROUNDING CONDUCTOR REQUIRED ON PRIMARY SYSTEM WHEN SEPARATE SYSTEMS ARE REQUIRED.

ELEVATION

GROUND

SKETCH DATE JUNE 2002 | STYLE OH–41


CHERWA–EWING ENGINEERING, PC
CONSULTING ENGINEERS
600 LYNNHAVEN PARKWAY, VIRGINIA BEACH, VA 23452
PHONE NO. (757) 340-6517 FAX NO. (757) 463-1817
E-MAIL Address: ce@cherwaewing.com

NORTH CAROLINA PROFESSIONAL SEAL 19077 11-13-14 ENGINEER LOUIS M. CHERWA

C. ALLAN BAMFORTH, JR.
ENGINEER–SURVEYOR, LTD.
NORFOLK, VIRGINIA


E-102

DEPARTMENT OF THE NAVY — NAVAL FACILITIES ENGINEERING COMMAND

# MARINE CORPS BASE
CAMP LEJEUNE, NORTH CAROLINA

DES. LMC
DR. ACN
CHK. LMC
SUBMITTED BY:
DESIGN DIR.
APPROVED: PWO OR OICC — DATE
SATISFACTORY TO: — DATE

## CONSTRUCT SR-10 AHA
DETAILS

SIZE F | CODE IDENT. NO 80091 | NAVFAC DRAWING NO. 60115551
CONST. CONTR. NO. N40085-15-B-0008
SCALE: GRAPHIC | SPEC. 05-15-0008 | SHEET 21 OF 21