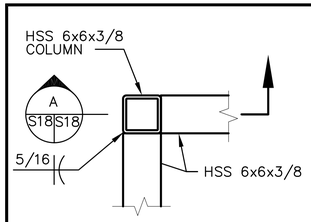

PLAN

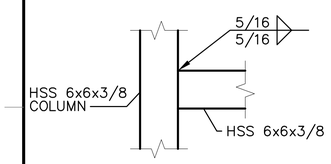

A S18S18 SECTION

DETAIL 1
SCALE: 1" = 1'-0"

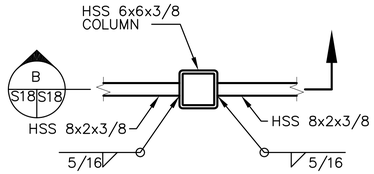

PLAN

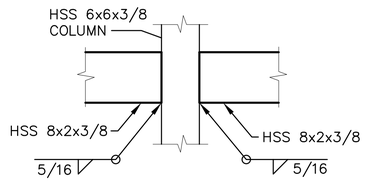

B S18S18 SECTION

DETAIL 2
SCALE: 1" = 1'-0"

NOTE:
CONNECTION SIMILAR FOR
HSS 6x2x3/8 TO HSS 6x6x3/8 COLUMN

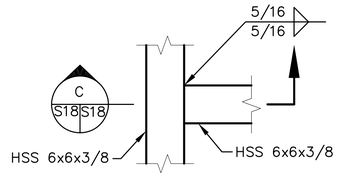

PLAN

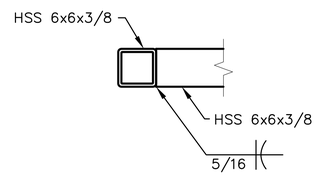

C S18S18 SECTION

DETAIL 3
SCALE: 1" = 1'-0"

NOTES:
1. CONNECTION SIMILAR FOR
HSS 6x2x3/8 TO HSS 6x6x3/8
2. CONNECTION SIMILAR FOR
HSS 8x2x3/8 TO HSS 8x2x3/8

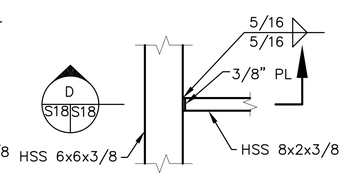

PLAN

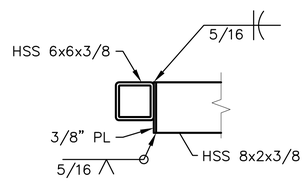

D S18S18 SECTION

DETAIL 4
SCALE: 1" = 1'-0"

TYPICAL CONNECTIONS

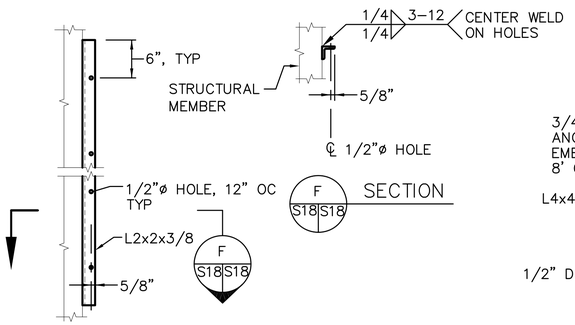

PLAN

NOTE: L2x2 SHALL NOT SPAN ACROSS
INDIVIDUAL MODULES

FLEXIBLE WALL SUPPORTS
@ STEEL STRUCTURES
SCALE: 1"=1'-0"

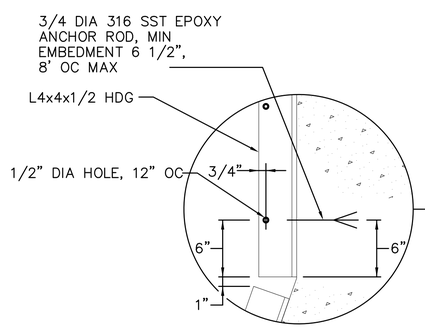

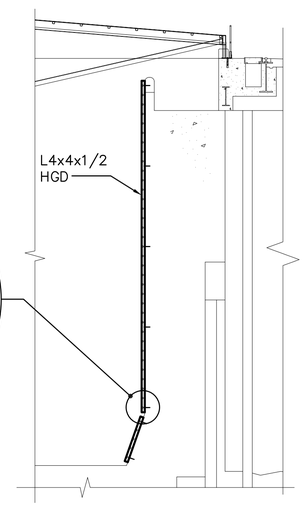

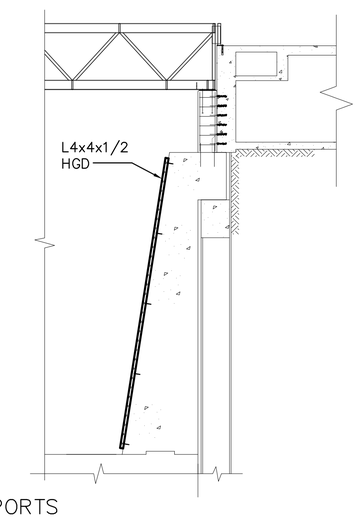

FLEXIBLE WALL SUPPORTS
AT CONCRETE STRUCTURES
SCALE: 1/8"=1'-0"

GRAPHIC SCALE

1/8" = 1' 8 4 0 8 16 24 scale feet

1" = 1' 1 .5 0 1 2 3 scale feet

SYM	DESCRIPTION	DATE	APPR
3	UPDATED FINAL SUBMISSION	01/26/2015	ILB
2	100% FINAL SUBMISSION	12/18/2014	ILB
1	100% PRE-FINAL SUBMISSION	11/20/2014	ILB
0	60% SUBMISSION	07/23/2017	ILB

NAVFAC

SEAL

PWD-MAINE
IN HOUSE DESIGN

APPROVED

FOR COMMANDER NAVFAC

ACTIVITY

SATISFACTORY TO DATE

DES IB DRW PFG CHK NAM

PM/DM IAN BODWELL

BRANCH MANAGER NATHAN MAHER

FEAD/PM&E AMIN BAHROUR PM&E

FIRE PROTECTION X

DEPARTMENT OF THE NAVY
NAVAL FACILITIES ENGINEERING COMMAND
PUBLIC WORKS DEPARTMENT - MAINE
NAVAL FACILITIES ENGINEERING COMMAND ~ MID-ATLANTIC
NAVAL SHIPYARD - PORTSMOUTH, NH
PORTSMOUTH NAVAL SHIPYARD
KITTERY, MAINE

COMPLETION OF DD #3
PROPULSOR ENCLOSURE

MISCELLANOUS DETAILS

EPROJECT NO.: 1340001

CONSTR. CONTR. NO. 15-C-6104

NAVFAC DRAWING NO. 12684653

SHEET 23 OF 28

S18 DD3-14-654

DRAWFORM REVISION: 10 MARCH 2009

FILE NAME: P:\ME\PortsmouthNavalShipyard\Waterfront\2014_1340001_Completion of DD #3 Propulsor Enclosure\B_Design\Drawings\Final\2014_1340001_Completion of DD #3 Propulsor Enclosure Updated 01-26-15.dwg LAYOUT NAME: S18 PLOTTED: Tuesday, March 03, 2015 - 12:40pm USER: ian.bodwell