PORTSMOUTH NAVAL SHIPYARD
KITTERY, ME

COMPLETION OF DD #3 PROPULSOR ENCLOSURE
CONTRACT NO. N40085-15-C-6104

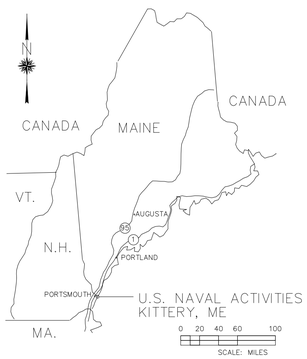

AREA MAP

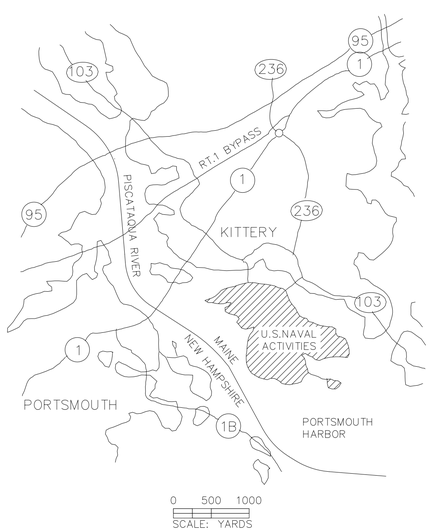

VICINITY MAP

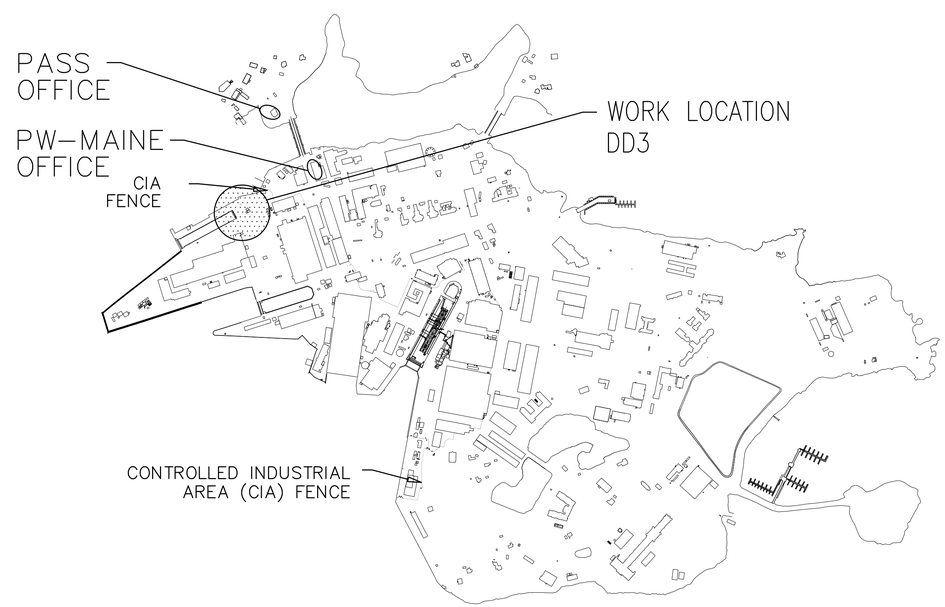

SITE PLAN
NOT TO SCALE

ELEVATION, SECTION OR DETAIL SYMBOLS

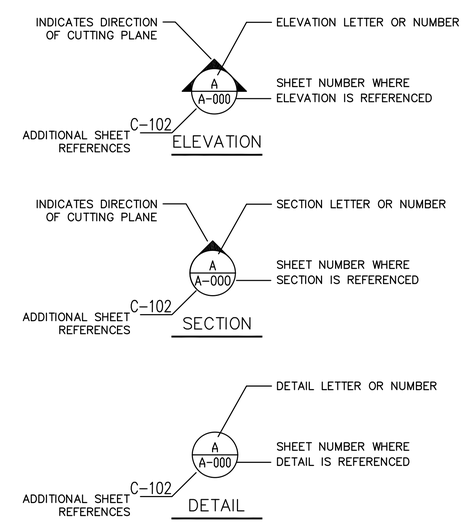

SYM	DESCRIPTION	DATE	APPR
2	100% FINAL SUBMISSION	12/18/2014	ILB
1	100% PRE-FINAL SUBMISSION	11/20/2014	ILB
0	60% SUBMISSION	07/23/2017	ILB

NAVFAC

SEAL

PWD-MAINE IN HOUSE DESIGN

APPROVED

FOR COMMANDER NAVFAC

ACTIVITY

SATISFACTORY TO DATE

DES IB DRW PFG CHK NAM
PM/DM IAN BODWELL
BRANCH MANAGER NATHAN MAHER
FEAD/PM&E AMIN BAHROUR PM&E
FIRE PROTECTION X

DEPARTMENT OF THE NAVY
NAVAL FACILITIES ENGINEERING COMMAND
PUBLIC WORKS DEPARTMENT - MAINE
NAVAL FACILITIES ENGINEERING COMMAND - MID-ATLANTIC
NAVAL SHIPYARD - PORTSMOUTH, NH
KITTERY, MAINE
PORTSMOUTH NAVAL SHIPYARD
COMPLETION OF DD #3 PROPULSOR ENCLOSURE

TITLE SHEET

EPROJECT NO.: 1340001
CONSTR. CONTR. NO. 15-C-6104
NAVFAC DRAWING NO. 12684631
SHEET 1 OF 28

G001 DD3-14-632

DRAWFORM REVISION: 10 MARCH 2009

FILE NAME: P:\ME\PortsmouthNavalShipyard\Waterfront\2014_1340001_Completion of DD #3 Propulsor Enclosure\B_Design\Drawings\Final\2014_1340001_Completion of DD #3 Propulsor Enclosure 12-18-14.dwg LAYOUT NAME: G001 PLOTTED: Thursday, December 18, 2014 - 7:23am USER: ian.bodwell

LIST OF DRAWINGS

SHEET	SHEET NO.	PWD-ME NO.	NAVFAC DWG. NO.	DRAWING TITLE
1 OF 28	G001	DD3-14-632	12684631	TITLE SHEET
2 OF 28	G002	DD3-14-633	12684632	LIST OF DRAWINGS
3 OF 28	A1	DD3-14-634	12684633	PROPULSOR ENCLOSURE PLAN, ROOF PLAN AND ELEVATIONS
4 OF 28	A2	DD3-14-635	12684634	HIGH BAY AND HIGH RISE PLANS
5 OF 28	A3	DD3-14-636	12684635	WALL AND MISCELLANEOUS DETAILS – PART 1
6 OF 28	S1	DD3-14-637	12684636	STRUCTURAL NOTES AND ABBREVIATIONS
7 OF 28	S2	DD3-14-638	12684637	LOCATION PLAN AND DESIGN DATA
8 OF 28	S3	DD3-14-639	12684638	GENERAL PLAN AND TYPICAL SECTIONS
9 OF 28	S4	DD3-14-640	12684639	LONGITUDINAL SECTIONS
10 OF 28	S5	DD3-14-641	12684640	FOUNDATION PLAN AND DETAILS
11 OF 28	S6	DD3-14-642	12684641	PROPULSOR ENCLOSURE FRAMING PLANS – PART 1
12 OF 28	S7	DD3-14-643	12684642	PROPULSOR ENCLOSURE FRAMING PLANS – PART 2
13 OF 28	S8	DD3-14-644	12684643	PROPULSOR ENCLOSURE FRAMING ELEVATIONS AND DETAILS
14 OF 28	S9	DD3-14-645	12684644	PROPULSOR ENCLOSURE FRAMING ELEVATIONS
15 OF 28	S10	DD3-14-646	12684645	PROPULSOR ENCLOSURE DETAILS – PART 1
16 OF 28	S11	DD3-14-647	12684646	PROPULSOR ENCLOSURE DETAILS – PART 2
17 OF 28	S12	DD3-14-648	12684647	HIGH BAY ROOF PLAN AND SECTIONS
18 OF 28	S13	DD3-14-649	12684648	RAIL LEVEL FRAMING PLAN AND DETAILS
19 OF 28	S14	DD3-14-650	12684649	HIGH BAY ROOF SECTIONS AND DETAILS
20 OF 28	S15	DD3-14-651	12684650	HIGH BAY ROOF TRUSS ELEVATIONS AND DETAILS
21 OF 28	S16	DD3-14-652	12684651	HIGH BAY ROOF TRUSS SECTIONS AND DETAILS
22 OF 28	S17	DD3-14-653	12684652	RETRACTABLE ROOF SYSTEM
23 OF 28	S18	DD3-14-654	12684653	MISCELLANEOUS DETAILS
24 OF 28	E1	DD3-14-655	12684654	ELECTRICAL LEGEND, ABBREVIATIONS AND DETAILS
25 OF 28	E2	DD3-14-656	12684655	PROPULSOR ENCLOSURE POWER PLANT PLANS PART 1
26 OF 28	E3	DD3-14-657	12684656	PROPULSOR ENCLOSURE POWER PLANT PLANS PART 2
27 OF 28	E4	DD3-14-658	12684657	PROPULSOR ENCLOSURE POWER RISER DIAGRAMS
28 PF 28	E5	DD3-14-659	12684658	ELECTRICAL HIGH BAY LIGHTING AND HVAC PLAN

SYM	DESCRIPTION	DATE	APPR
2	100% FINAL SUBMISSION	12/18/2014	ILB
1	100% PRE-FINAL SUBMISSION	11/20/2014	ILB
0	60% SUBMISSION	07/23/2017	ILB

NAVFAC

SEAL

PWD-MAINE
IN HOUSE DESIGN

APPROVED

FOR COMMANDER NAVFAC

ACTIVITY

SATISFACTORY TO DATE

DES IB DRW PFG CHK NAM
PM/DM IAN BODWELL
BRANCH MANAGER NATHAN MAHER
FEAD/PM&E AMIN BAHROUR PM&E
FIRE PROTECTION X

DEPARTMENT OF THE NAVY
NAVAL FACILITIES ENGINEERING COMMAND
PUBLIC WORKS DEPARTMENT – MAINE
PORTSMOUTH NAVAL SHIPYARD

NAVAL FACILITIES ENGINEERING COMMAND – MID-ATLANTIC
NAVAL SHIPYARD – PORTSMOUTH, NH
KITTERY, MAINE

COMPLETION OF DD #3
PROPULSOR ENCLOSURE

LIST OF DRAWINGS

EPROJECT NO.: 1340001
CONSTR. CONTR. NO. 15-C-6104
NAVFAC DRAWING NO. 12684632
SHEET 2 OF 28
G002 DD3-14-633

DRAWFORM REVISION: 10 MARCH 2009

FILE NAME: P:\ME\PortsmouthNavalShipyard\Waterfront\2014_1340001_Completion of DD #3 Propulsor Enclosure\B_Design\Drawings\Final\2014_1340001_Completion of DD #3 Propulsor Enclosure 12-18-14.dwg LAYOUT NAME: G002 PLOTTED: Thursday, December 18, 2014 - 7:23am USER: ian.bodwell

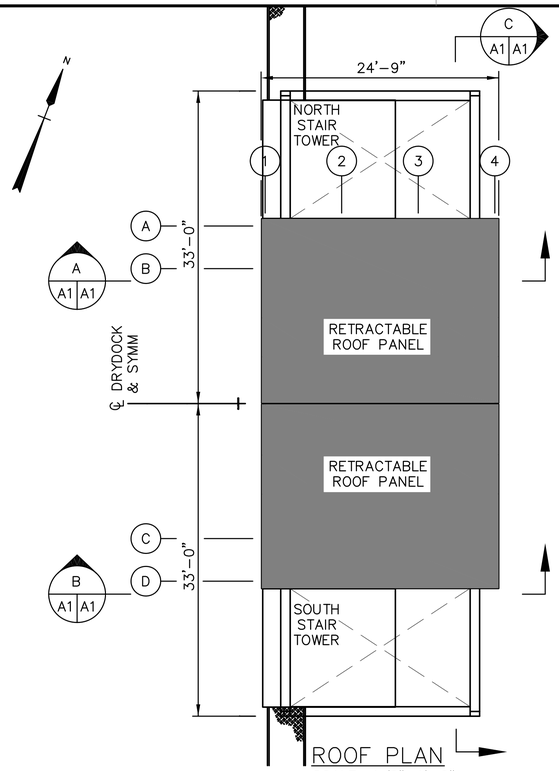

ROOF PLAN
SCALE: 1/8"=1'-0"

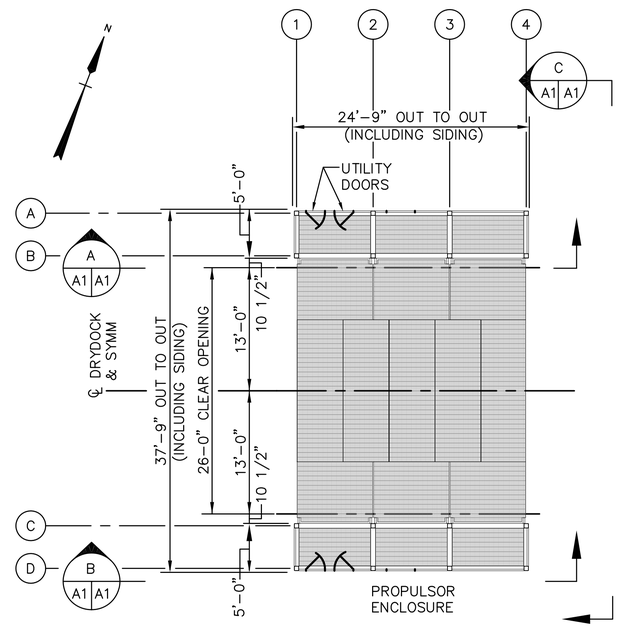

PLAN AT ELEV 95.95
SCALE: 1/8"=1'-0"

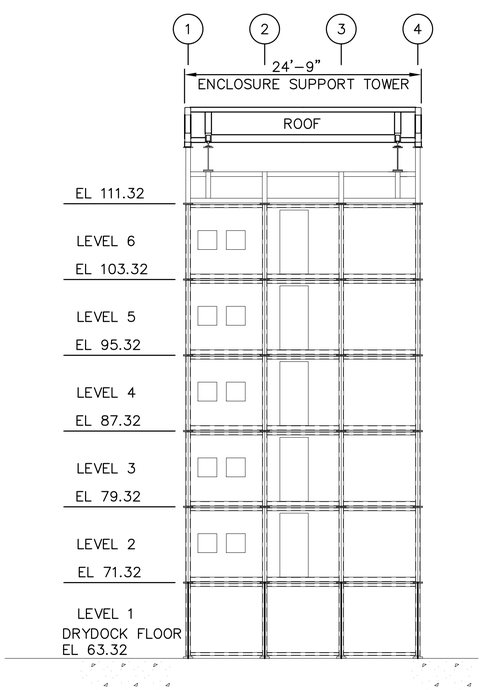

A ELEVATION
A1 A1 SCALE: 1/8"=1'-0"

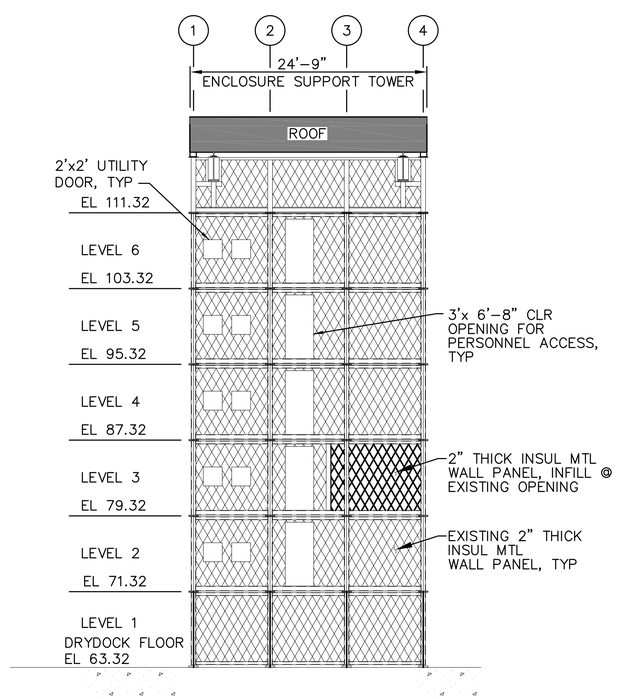

B ELEVATION
A1 A1 SCALE: 1/8"=1'-0"

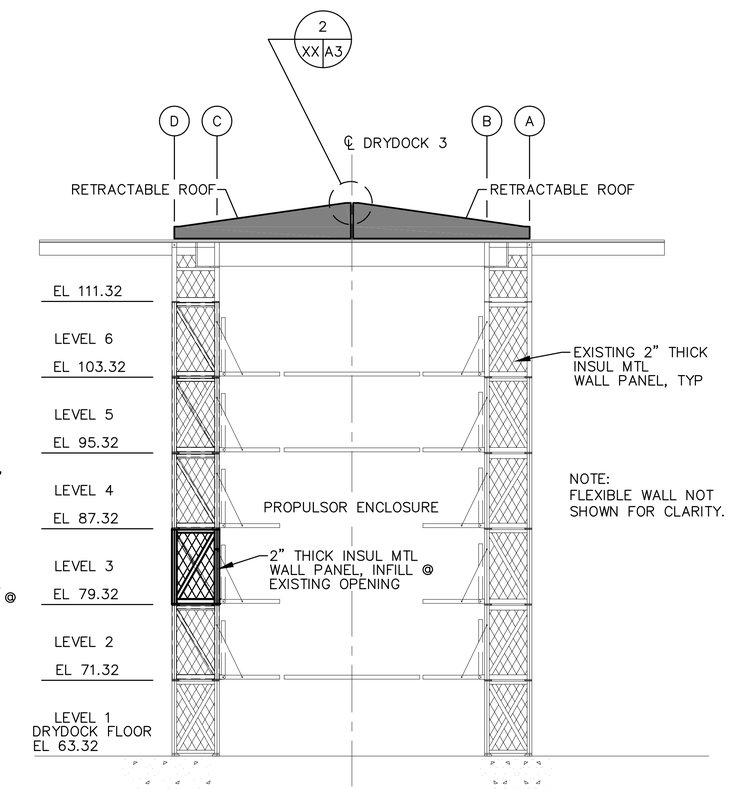

C ELEVATION
A1 A1 SCALE: 1/8"=1'-0"

GRAPHIC SCALE
1/8" = 1' 8 4 0 8 16 24
scale feet

SYM	DESCRIPTION	DATE	APPR
2	100% FINAL SUBMISSION	12/18/2014	ILB
1	100% PRE-FINAL SUBMISSION	11/20/2014	ILB
0	60% SUBMISSION	07/23/2017	ILB

NAVFAC

SEAL

PWD-MAINE
IN HOUSE DESIGN

APPROVED
FOR COMMANDER NAVFAC
ACTIVITY
SATISFACTORY TO DATE

DES IB DRW PFG CHK NAM
PM/DM IAN BODWELL
BRANCH MANAGER NATHAN MAHER
FEAD/PM&E AMIN BAHROUR PM&E
FIRE PROTECTION X

DEPARTMENT OF THE NAVY
NAVAL FACILITIES ENGINEERING COMMAND
PUBLIC WORKS DEPARTMENT – MAINE
NAVAL FACILITIES ENGINEERING COMMAND ~ MID-ATLANTIC
NAVAL SHIPYARD ~ PORTSMOUTH, NH
PORTSMOUTH NAVAL SHIPYARD KITTERY, MAINE

COMPLETION OF DD #3
PROPULSOR ENCLOSURE

PROPULSOR ENCLOSURE PLAN, ROOF PLAN AND ELEVATIONS

EPROJECT NO.: 1340001
CONSTR. CONTR. NO. 15-C-6104
NAVFAC DRAWING NO. 12684633
SHEET 3 OF 28
A1 DD3-14-634

DRAWFORM REVISION: 10 MARCH 2009

FILE NAME: P:\ME\PortsmouthNavalShipyard\Waterfront\2014_1340001_Completion of DD #3 Propulsor Enclosure\B_Design\Drawings\Final\2014_1340001_Completion of DD #3 Propulsor Enclosure 12-18-14.dwg LAYOUT NAME: A1 PLOTTED: Thursday, December 18, 2014 - 7:25am USER: ian.bodwell

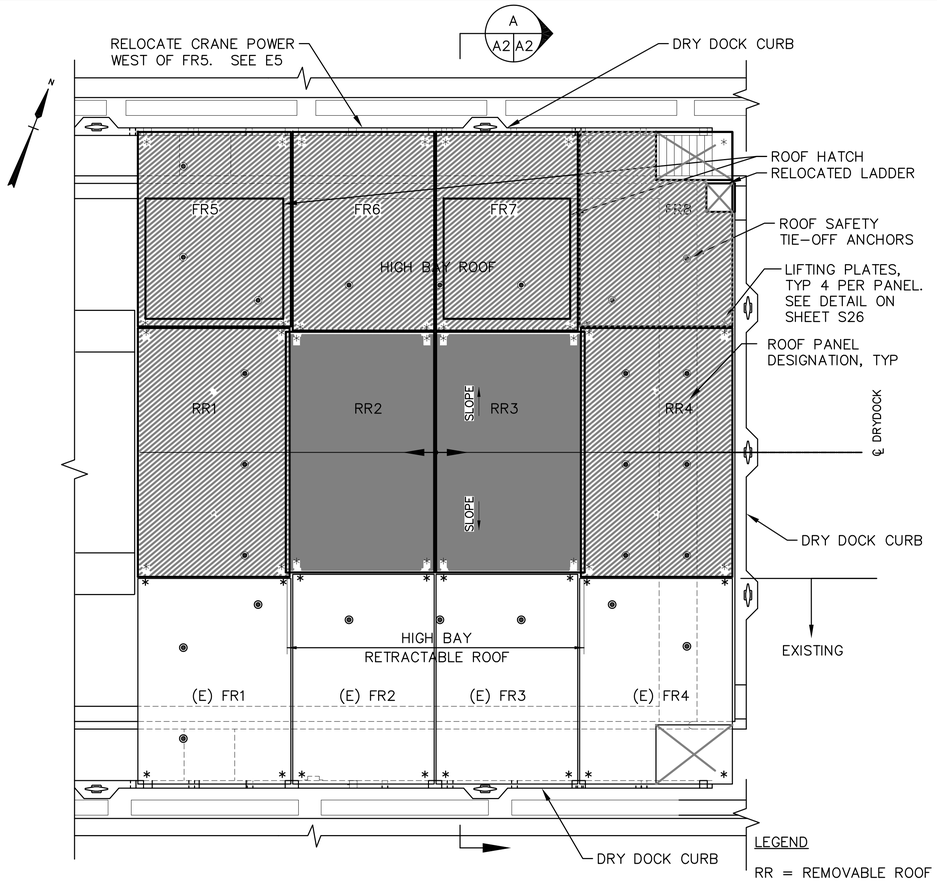

LEGEND

RR = REMOVABLE ROOF PANEL

FR = FIXED ROOF PANEL

(RR2 AND RR3 ARE RETRACTABLE)

HIGH BAY PLAN

SCALE: 1"=10'

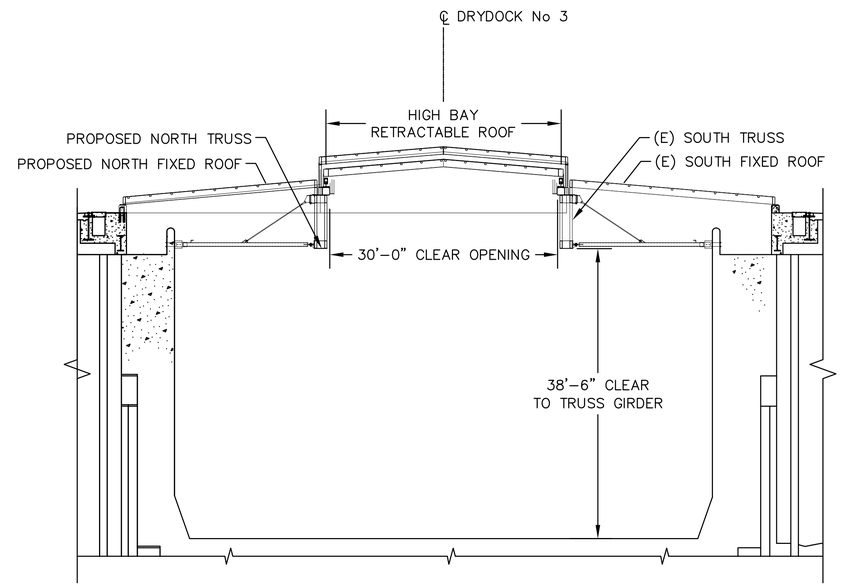

A
A2 A2

SECTION

SCALE: 1"=10'

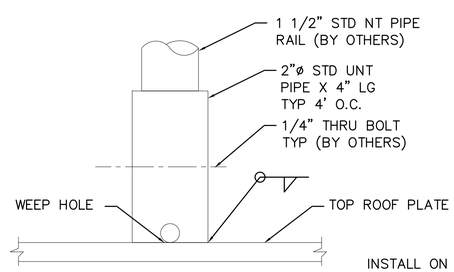

INSTALL ON EDGES OF FR1–FR8 & RR1 & RR4
NOT ADJACENT TO DRY DOCK CURB @ 4' O.C. MAX

HANDRAIL SOCKET DETAIL

SCALE: NOT TO SCALE

GRAPHIC SCALE

1" = 10' 10 5 0 10 20 30

scale feet

SYM	DESCRIPTION	DATE	APPR
3	UPDATED FINAL SUBMISSION	01/26/2015	ILB
2	100% FINAL SUBMISSION	12/18/2014	ILB
1	100% PRE-FINAL SUBMISSION	11/20/2014	ILB
0	60% SUBMISSION	07/23/2017	ILB

NAVFAC

SEAL

PWD-MAINE
IN HOUSE DESIGN

APPROVED

FOR COMMANDER NAVFAC

ACTIVITY

SATISFACTORY TO DATE

DES IB DRW PFG CHK NAM

PM/DM IAN BODWELL

BRANCH MANAGER NATHAN MAHER

FEAD/PM&E AMIN BAHROUR PM&E

FIRE PROTECTION X

DEPARTMENT OF THE NAVY
NAVAL FACILITIES ENGINEERING COMMAND
PUBLIC WORKS DEPARTMENT – MAINE
PORTSMOUTH NAVAL SHIPYARD

NAVAL FACILITIES ENGINEERING COMMAND
NAVAL FACILITIES ENGINEERING COMMAND ~ MID-ATLANTIC
NAVAL SHIPYARD ~ PORTSMOUTH, NH
KITTERY, MAINE

COMPLETION OF DD #3
PROPULSOR ENCLOSURE

HIGH BAY AND HIGH RISE PLANS

EPROJECT NO.: 1340001

CONSTR. CONTR. NO. 15-C-6104

NAVFAC DRAWING NO. 12684634

SHEET 4 OF 28

A2 DD3-14-635

DRAWFORM REVISION: 10 MARCH 2009

FILE NAME: P:\ME\PortsmouthNavalShipyard\Waterfront\2014_1340001_Completion of DD #3 Propulsor Enclosure\B_Design\Drawings\Final\2014_1340001_Completion of DD #3 Propulsor Enclosure 12-18-14.dwg LAYOUT NAME: A2 PLOTTED: Monday, January 26, 2015 - 12:18pm USER: ian.bodwell

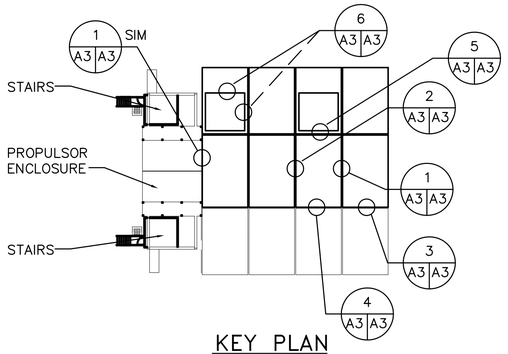

KEY PLAN
NOT TO SCALE

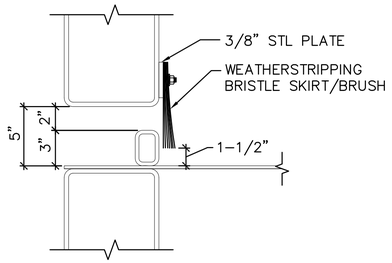

1 A3 A3 WEATHERSTRIPPING DETAIL
NOT TO SCALE

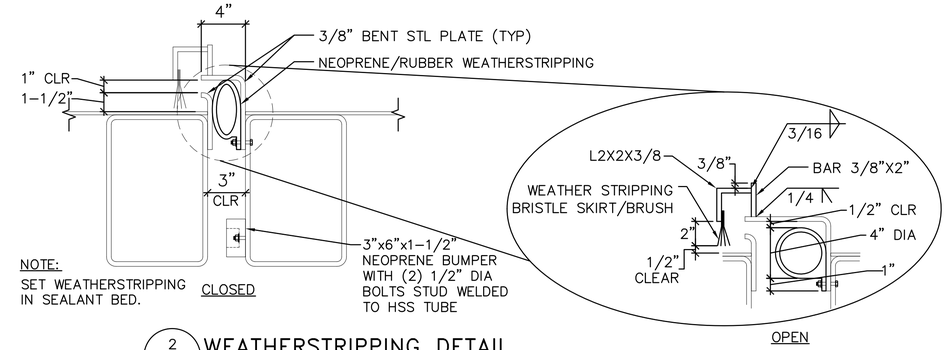

2 A3 A3 WEATHERSTRIPPING DETAIL
NOT TO SCALE

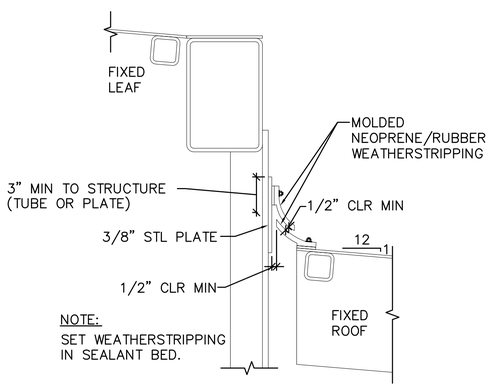

3 A3 A3 WEATHERSTRIPPING DETAIL
NOT TO SCALE

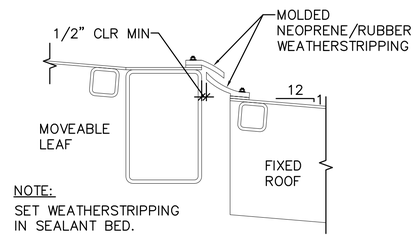

4 A3 A3 WEATHERSTRIPPING DETAIL
NOT TO SCALE

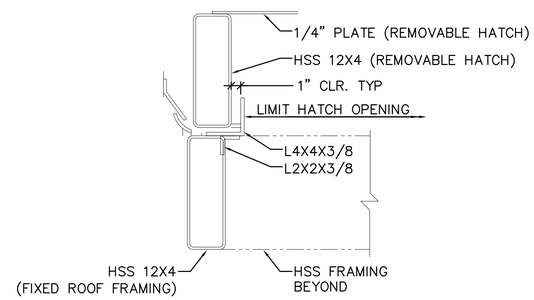

5 A3 A3 REMOVABLE COVER DETAIL
NOT TO SCALE

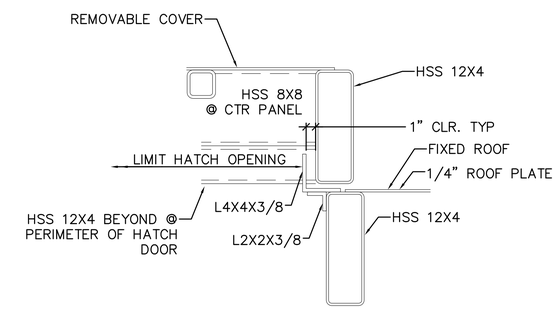

6 A3 A3 REMOVABLE COVER DETAIL
NOT TO SCALE

PLEASE NOTE: NEOPRENE/RUBBER WEATHER STRIPPING SHOWN TO BE PROVIDED ON NEW AND EXISTING COMPONENTS PER DETAILS. DETAILS ARE SCHEMATIC ONLY. CONTRACTOR RESPONSIBLE FOR COORDINATION BETWEEN THESE DETAILS AND STRUCTURAL SHEETS.

SYM	DESCRIPTION	DATE	APPR
3	UPDATED FINAL SUBMISSION	01/26/2015	ILB
2	100% FINAL SUBMISSION	12/18/2014	ILB
1	100% PRE-FINAL SUBMISSION	11/20/2014	ILB
0	60% SUBMISSION	07/23/2017	ILB

NAVFAC

SEAL

PWD-MAINE
IN HOUSE DESIGN

APPROVED

FOR COMMANDER NAVFAC

ACTIVITY

SATISFACTORY TO DATE

DES IB DRW PFG CHK NAM
PM/DM IAN BODWELL
BRANCH MANAGER NATHAN MAHER
FEAD/PM&E AMIN BAHROUR PM&E
FIRE PROTECTION X

DEPARTMENT OF THE NAVY
NAVAL FACILITIES ENGINEERING COMMAND
NAVAL FACILITIES ENGINEERING COMMAND ~ MID-ATLANTIC
PUBLIC WORKS DEPARTMENT ~ MAINE
NAVAL SHIPYARD ~ PORTSMOUTH, NH
KITTERY, MAINE
PORTSMOUTH NAVAL SHIPYARD

COMPLETION OF DD #3
PROPULSOR ENCLOSURE

WALL AND MISCELLANEOUS DETAILS – PART 2

EPROJECT NO.: 1340001
CONSTR. CONTR. NO. 15-C-6104
NAVFAC DRAWING NO. 12684635
SHEET 5 OF 28
A3 DD3-14-636

DRAWFORM REVISION: 10 MARCH 2009

FILE NAME: P:\ME\PortsmouthNavalShipyard\Waterfront\2014_1340001_Completion of DD #3 Propulsor Enclosure\B_Design\Drawings\Final\2014_1340001_Completion of DD #3 Propulsor Enclosure 12-18-14.dwg LAYOUT NAME: A3 PLOTTED: Monday, January 26, 2015 - 12:19pm USER: ion.bodwell

STRUCTURAL STEEL NOTES:

1. STEEL CONSTRUCTION SHALL BE IN ACCORDANCE WITH "SPECIFICATION FOR THE DESIGN, FABRICATION AND ERECTION OF STRUCTURAL STEEL FOR BUILDING," AMERICAN INSTITUTE OF STEEL CONSTRUCTION (AISC) – LATEST EDITION.
2. WELDING SHALL CONFORM TO THE AMERICAN WELDING SOCIETY STRUCTURAL WELDING CODE, D1.1–90. ELECTRODE: E70.
3. ALL WELDS SHALL BE 5/16" FILLET WELDS MADE ALL–AROUND UNLESS SHOWN OTHERWISE.
4. STRUCTURAL STEEL SHALL BE AS INDICATED IN THE SPECIFICATIONS.
5. HOLLOW STRUCTURAL SECTIONS, HSS, SHALL CONFORM TO THE REQUIREMENTS OF ASTM A 500, GRADE B.
6. COLUMNS SHALL BE SET PLUMB. ENDS OF COLUMNS SHALL BE MILLED, UNLESS SHOWN OTHERWISE.
7. STRUCTURAL STEEL SHALL BE ERECTED WITH THE NATURAL BOW UPWARD.
8. CONNECTIONS:
   - A. ALL CONNECTION BOLTS SHALL BE A MINIMUM OF 3/4" DIA ASTM A 325 HIGH STRENGTH BOLTS. UNLESS OTHERWISE SPECIFIED.
   - B. CONNECTIONS SHALL BE DESIGNED AS BEARING TYPE WITH THREADS IN SHEAR PLANE AND WITH A MINIMUM OF 2 – 3/4" DIA BOLTS PER CONNECTION, UNLESS OTHERWISE SPECIFIED.
   - C. SIMPLE FRAMING CONNECTIONS SHALL SUPPORT A MINIMUM OF HALF THE ALLOWABLE UNIFORM LOAD CAPACITY OF THE BEAM AS PER AISC, PART 2 TABLE OF ALLOWABLE UNIFORM LOADS FOR BEAMS LATERALLY SUPPORTED.
9. NO FIELD CUTTING OF STRUCTURAL STEEL SHALL BE DONE WITHOUT WRITTEN APPROVAL OF THE CONTRACTING OFFICER.
10. ANCHOR BOLTS SHALL BE 1" DIAMETER F1554 UNLESS OTHERWISE SPECIFIED.
11. ALL DECK PLATES SHALL BE CONTINUOUSLY FILLET WELDED TO THE SUPPORTING BEAMS AT ALL SEAMS EXPOSED TO THE WEATHER. IN AREAS PROTECTED FROM WEATHER (UNDERSIDE OF DECK) THE PLATE SHALL BE WELDED TO THE BEAMS AND PURLINS WITH AN 1" AT 12" FILLET WELD ON BOTH SIDES AND STAGGERED.
12. ALL SUPPORT RAIL SHALL BE ASCE 85 # RAIL. THE RAIL HEADS SHALL BE HARDENED TO A MINIMUM OF 260 BRINELL HARDNESS (25 ROCKWELL C SCALE).

CONCRETE NOTES:

1. ALL CONCRETE CONSTRUCTION SHALL BE IN CONFORMANCE WITH THE ACI 318–2002 CODE.
2. CONCRETE SHALL DEVELOP A MINIMUM COMPRESSIVE STRENGTH AT 28 DAYS AS FOLLOWS:
   ALL LOCATIONS ..... 4000 PSI
3. REINFORCING STEEL SHALL BE ASTM A615 GRADE 60.
4. REINFORCING STEEL SHALL HAVE A CONCRETE COVER AS FOLLOWS, EXCEPT AS OTHERWISE SHOWN ON DRAWINGS:
   - SURFACES CAST IN PLACE AGAINST EARTH ..... 3"
   - SURFACES PROTECTED FROM WEATHER, EARTH OR LIQUIDS:
     - SLAB .....1"
     - COLUMNS, PILASTERS ..... 1 1/2"
   - SURFACES EXPOSED TO WEATHER OR EARTH ..... 2"

   IN NO CASE SHALL THE COVER BE LESS THAN 1 1/2" TIMES THE BAR DIAMETER. SHOP DRAWINGS FOR THE REINFORCING SHALL SHOW THE CONCRETE COVER.
5. ALL EXPOSED CONCRETE EDGES SHALL HAVE 3/4" CHAMFER.
6. SHOP DRAWINGS SHALL BE COMPLETED AND CHECKED BY THE CONTRACTOR PRIOR TO SUBMISSION FOR THE CONTRACTING OFFICER'S APPROVAL.
7. THE CONTRACTOR SHALL SUBMIT FOR APPROVAL, DETAILS AND LOCATIONS OF ALL CONSTRUCTION JOINTS, INCLUDING PROVISION FOR PROPER DOWELING AND KEYING.

CONSTRUCTION NOTES:

1. THE DIMENSIONAL CONTROL OF THE PROPULSOR ENCLOSURE IS BASED ON THE CENTERLINE OF DRYDOCK NO. 3 AND THE HEAD END STATIONING AS INDICATED ON SHEETS NO. S2 & S3.
2. THE DIMENSIONS TO THE DRYDOCK WALLS ARE APPROXIMATE AND DO NOT REFLECT AS–BUILT CONDITIONS. THE CONTRACTOR SHALL FIELD VERIFY DIMENSIONS ON THE EXISTING DRYDOCK ALTER, CURBING AND OTHER DRYDOCK FEATURES THAT WILL BE MODIFIED AND/OR HAVE PROPULSOR FRAMING MEMBERS CONNECTING TO THEM.
3. THE CONTRACTOR SHALL PERFORM A TOPOGRAPHIC SURVEY OF THE FLOOR OF THE DRYDOCK AT THE BASE OF ALL STRUCTURES. THE SURVEY SHALL INCLUDE AN ELEVATION SHOT AT EACH BASE PLATE LOCATION AND SHALL INCLUDE THE LOCATION OF ALL CONSTRUCTION AND EXPANSION JOINTS IN THE FLOOR SLAB.
4. THE CONTRACTOR SHALL NOTIFY THE CONTRACTING OFFICER IF ANY EXISTING FEATURES ENCOUNTERED WILL IMPACT THE CONTRACT SPECIFIED DETAILS.
5. THE CONTRACTOR SHALL SUBMIT THE SURVEY TO THE CONTRACTING OFFICER AND INCLUDE THE ELEVATIONS AND AS ENCOUNTERED EXISTING FEATURES IN PREPARATION OF THE SHOP DRAWINGS.
6. THE CONTRACTOR SHALL NOT CUT ANY REINFORCING IN THE DRYDOCK FLOOR AND WALLS WITHOUT PRIOR APPROVAL BY THE CONTRACTING OFFICER.
7. THE CONTRACTOR SHALL PROVIDE NEW HARDWARE FOR ALL CONNECTIONS BETWEEN LEVELS OF PROPULSOR ENCLOSURE.

PADEYES:

1. PADEYES WERE BASED ON THE FOLLOWING CRITERIA:
   - A. 3:1 FACTOR OF SAFETY BASED ON YIELD STRENGTH OR 5:1 FACTOR OF SAFETY BASED ON ULTIMATE STRENGTH
   - B. 5 DEGREE SIDE LOAD
   - C. 180 DEGREE LOADING IN THE PLANE OF THE EYE
2. ALL LIFTING POINTS SHALL BE PROOF TESTED BY THE CONTRACTOR TO 200% OF THE WORKING LOAD SHOWN ON THE DRAWINGS.
3. AFTER GOVERNMENT ACCEPTANCE OF PROOF TEST REPORTS, DIE STAMP BASE MATRIAL BESIDE PADEYES WITH TEST DATE, CAPACITY AND SF3 USING 1/4" CHARACTERS.
4. FIXED ROOF UNITS SHALL BE LABELED AT ALL PADEYES WITH THE FOLLOWING: "ENSURE ALL BOLTS ARE REMOVED PRIOR TO LIFTING."

LEGEND:

EXISTING FEATURES SHOWN THUS ————————

FEATURES TO BE PROVIDED UNDER THIS CONTRACT SHOWN THUS ————————

ABBREVIATIONS

ACI	AMERICAN CONCRETE INSTITUTE
APPROX	APPROXIMATE
ASTM	AMERICAN SOCIETY FOR TESTING AND MATERIALS
ASCE	AMERICAN SOCIETY OF CIVIL ENGINEERS
BOT	BOTTOM
BM	BEAM
BRG	BEARINGS
?	CENTERLINE
CHAMF	CHAMFER
COL	COLUMN
CLR	CLEAR, CLEARANCE
CONC	CONCRETE
CONN	CONNECTION
CONT	CONTINUOUS
DEPT	DEPARTMENT
DIA	DIAMETER
DL	DEAD LOAD
DN	DOWN
E	EAST
EA	EACH
ELEV, EL	ELEVATION
EXIST, EXST	EXISTING
EXP	EXPANSION
FD	FIRE DEPARTMENT
FL	FLOOR
FLG	FLANGE
FS	FAR SIDE
GALV	GALVANIZED
GR	GRADE
HDG	HOT DIPPED GALVANIZED
HEX	HEXAGONAL
HM	HEAVY METAL
HP	HIGH POINT
HPC	HIGH PERFORMANCE COATING
HR	HIGH RISE
IBC	INTERNATIONAL BUILDING CODE
ID	INSIDE DIAMETER
INSUL	INSULATION
K	KIP/KIPS
LBS	POUNDS
LP	LOW POINT
MAX	MAXIMUM
MIN	MININUM
MPH	MILES PER HOUR
MTL	METAL
N	NORTH
NO	NUMBER
NOM	NORMAL
NS	NEAR SIDE
OC	ON CENTER
OD	OUTSIDE DIAMETER
OPP	OPPOSITE
OTO	OUT TO OUT
PL	PLATE
PNT	PAINT
PSF	POUNDS PER SQUARE FOOT
R	RADIUS
PSI	POUND PER SQUARE INCH
REQ'D	REQUIRED
S	SOUTH
SCH	SCHEDULE
SDL	SUPERIMPOSED DEAD LOAD
SST	STAINLESS STEEL
STIFF	STIFFENER
STL	STEEL
SYMM	SYMMETRICAL
THK	THICK
TOC	TOP OF CONCRETE
TOS	TOP OF STEEL
TYP	TYPICAL
UFC	UNIFIED BUILDING CODE
UNC	UNIFIED NATIONAL COARSE
UNO	UNLESS NOTED OTHERWISE
VIF	VERIFY IN FIELD
W	WEST
W/	–WITH
WLL	WORKING LOAD LIMIT

SYM	DESCRIPTION	DATE	APPR
3	UPDATED FINAL SUBMISSION	01/26/2015	ILB
2	100% FINAL SUBMISSION	12/18/2014	ILB
1	100% PRE–FINAL SUBMISSION	11/20/2014	ILB
0	60% SUBMISSION	07/23/2017	ILB

NAVFAC

SEAL

PWD-MAINE IN HOUSE DESIGN

APPROVED

FOR COMMANDER NAVFAC

ACTIVITY

SATISFACTORY TO DATE

DES IB DRW PFG CHK NAM

PM/DM IAN BODWELL

BRANCH MANAGER NATHAN MAHER

FEAD/PM&E AMIN BAHROUR PM&E

FIRE PROTECTION X

DEPARTMENT OF THE NAVY
NAVAL FACILITIES ENGINEERING COMMAND
PUBLIC WORKS DEPARTMENT – MAINE
NAVAL FACILITIES ENGINEERING COMMAND ~ MID-ATLANTIC
NAVAL SHIPYARD – PORTSMOUTH, NH
PORTSMOUTH NAVAL SHIPYARD KITTERY, MAINE

COMPLETION OF DD #3
PROPULSOR ENCLOSURE

STRUCTURAL NOTES AND ABBREVIATIONS

EPROJECT NO.: 1340001

CONSTR. CONTR. NO. 15–C–6104

NAVFAC DRAWING NO. 12684636

SHEET 6 OF 28

S1 DD3-14-637

DRAWFORM REVISION: 10 MARCH 2009

FILE NAME: P:\MEL\PortsmouthNavalShipyard\Waterfront\2014_1340001_Completion of DD #3 Propulsor Enclosure\B_Design\Drawings\Final\2014_1340001_Completion of DD #3 Propulsor Enclosure 12-18-14.dwg LAYOUT NAME: S1 PLOTTED: Monday, January 26, 2015 – 12:21pm USER: ian.bodwell

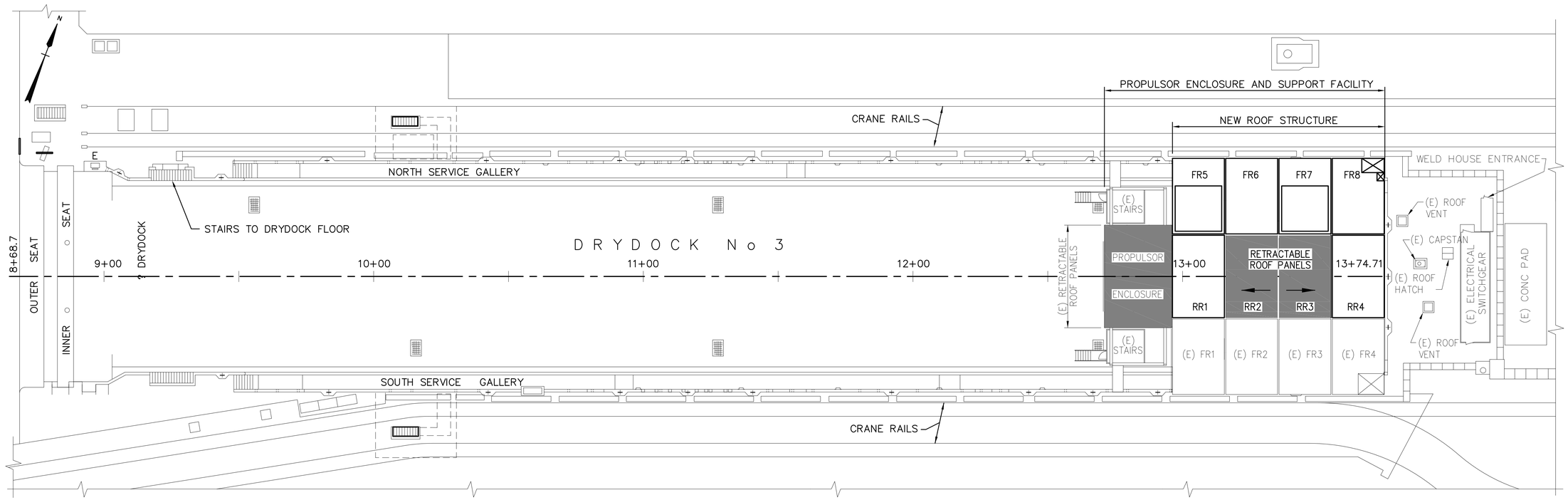

PLAN – DRYDOCK No 3

SCALE: 1"=20'

DESIGN DATA:

A. ROOF LOADS:

1. HIGH BAY AREA ROOF

LIVE LOAD (PERSONNEL) UNIFORM	20 PSF
LIVE LOAD (SNOW) UNIFORM	34 PSF
EQUIPMENT LOAD	500 LBS

2. PROPULSOR ENCLOSURE ROOF

LIVE LOAD (PERSONNEL) – UNIFORM	20 PSF
LIVE LOAD (SNOW) UNIFORM	34 PSF

B. WIND LOADS:

BASIC WIND SPEED	100 MPH
EXPOSURE D	PER IBC – 2012
IMPORTANCE FACTOR 1.0	PER IBC – 2012

C. BASIC SNOW LOADS:

50 PSF GROUND SNOW LOAD PLUS DRIFT	PER UFC

D. SEISMIC LOADS PER IBC – 2012

IMPORTANCE FACTOR	1.0
SEISMIC DESIGN CATAGORY	B

E. DURING PERIODS OF ANTICIPATED HIGH WINDS, CLOSE RETRACTABLE ROOF PANELS AT THE HIGH BAY ROOF. LOCK RETRACTABLE PANELS DOWN TO FIXED ROOF PANELS VIA LIFTING LUGS.

GRAPHIC SCALE

1" = 20' 20 10 0 20 40 60 scale feet

SYM	DESCRIPTION	DATE	APPR
2	100% FINAL SUBMISSION	12/18/2014	ILB
1	100% PRE-FINAL SUBMISSION	11/20/2014	ILB
0	60% SUBMISSION	07/23/2017	ILB

NAVFAC

PWD-MAINE IN HOUSE DESIGN

SEAL

APPROVED

FOR COMMANDER NAVFAC

ACTIVITY

SATISFACTORY TO DATE

DES IB DRW PFG CHK NAM

PM/DM IAN BODWELL

BRANCH MANAGER NATHAN MAHER

FEAD/PM&E AMIN BAHROUR PM&E

FIRE PROTECTION X

DEPARTMENT OF THE NAVY
NAVAL FACILITIES ENGINEERING COMMAND
PUBLIC WORKS DEPARTMENT – MAINE
PORTSMOUTH NAVAL SHIPYARD

NAVAL FACILITIES ENGINEERING COMMAND ~ MID-ATLANTIC
NAVAL SHIPYARD ~ PORTSMOUTH, NH
KITTERY, MAINE

COMPLETION OF DD #3
PROPULSOR ENCLOSURE

LOCATION PLAN AND DESIGN DATA

EPROJECT NO.: 1340001

CONSTR. CONTR. NO. 15-C-6104

NAVFAC DRAWING NO. 12684637

SHEET 7 OF 28

S2 DD3-14-638

DRAWFORM REVISION: 10 MARCH 2009

FILE NAME: P:\ME\PortsmouthNavalShipyard\Waterfront\2014_1340001_Completion of DD #3 Propulsor Enclosure\B_Design\Drawings\Final\2014_1340001_Completion of DD #3 Propulsor Enclosure 12-18-14.dwg LAYOUT NAME: S2 PLOTTED: Monday, January 26, 2015 - 12:21pm USER: ian.bodwell

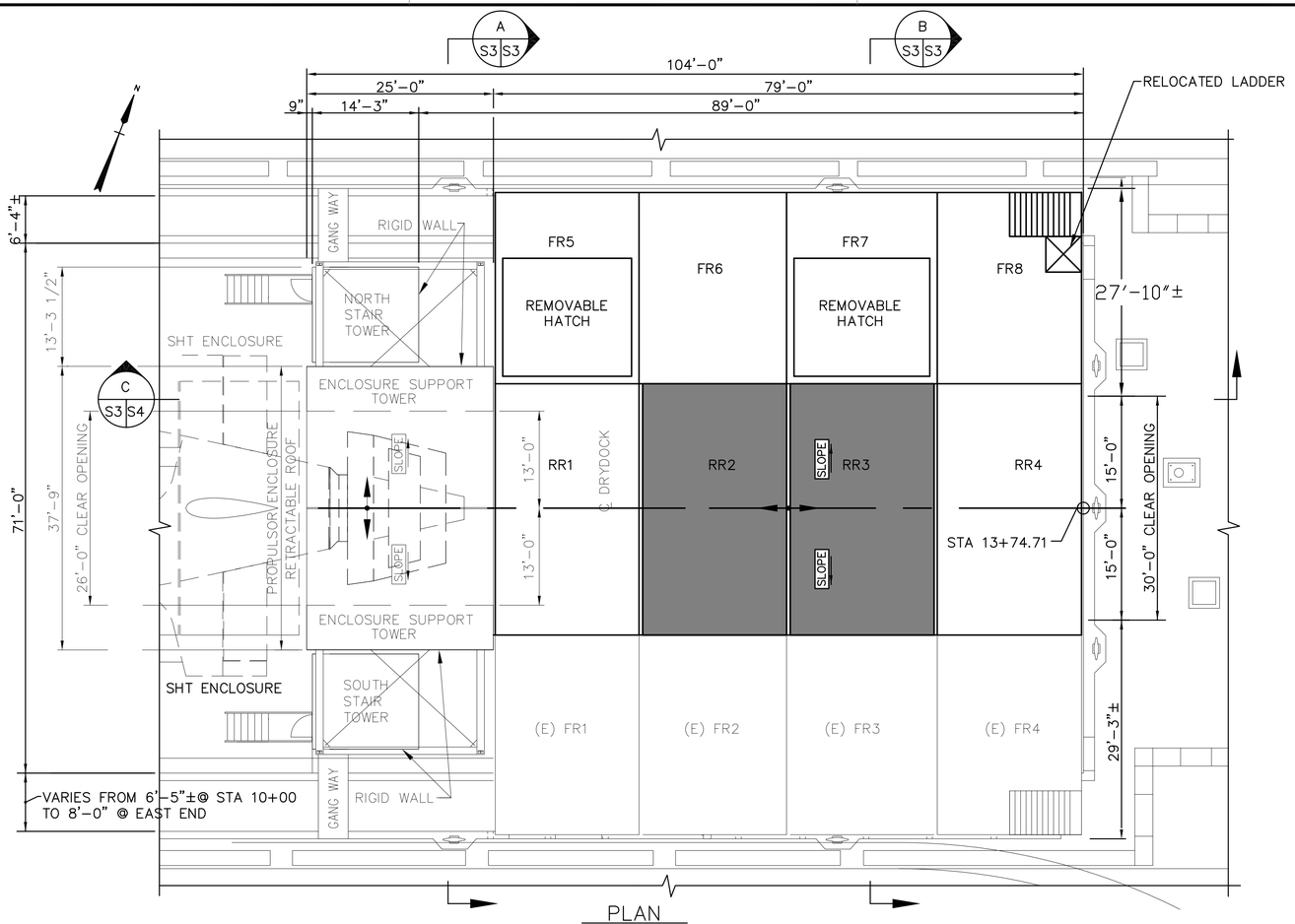

PLAN
SCALE: 1"=10'

INSTALLATION REQUIREMENTS:

- FIXED ROOF SECTIONS MUST BE INSTALLED AND SECURED PRIOR TO INSTALLING CENTER OPERABLE ROOF.
- ONCE CENTER OPERABLE ROOF IS INSTALLED, ONLY ONE FIXED ROOF SECTION ON EACH TRUSS MAY BE REMOVED WITHOUT NECESSITATING REMOVAL OF THE CENTER OPERABLE ROOF.

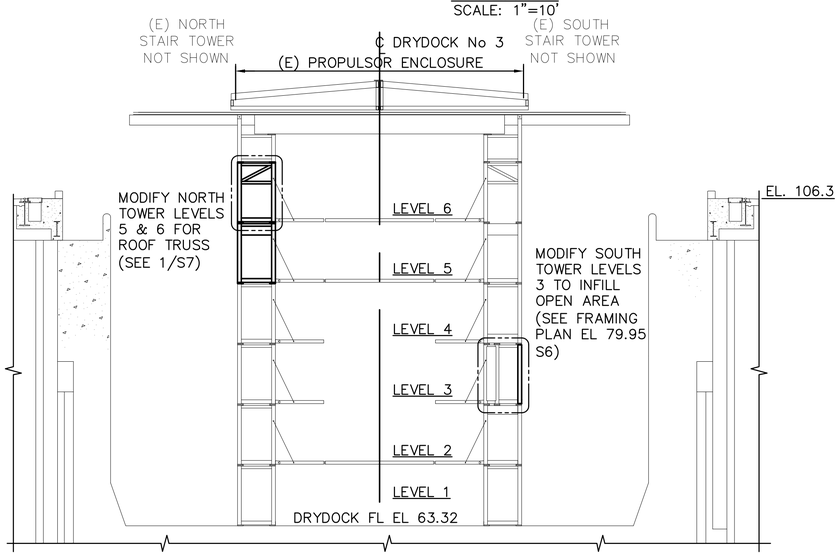

A S3 S3 SECTION
SCALE: 1"=10'

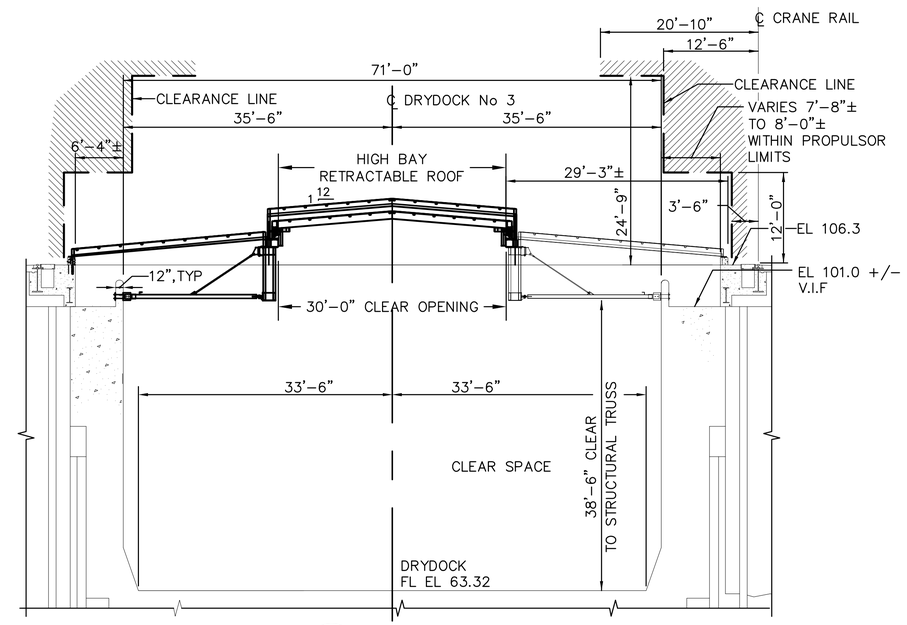

B S3 S3 SECTION
SCALE: 1"=10'

GRAPHIC SCALE
1" = 10' 10 5 0 10 20 30
scale feet

SYM	DESCRIPTION	DATE	APPR
2	100% FINAL SUBMISSION	12/18/2014	ILB
1	100% PRE-FINAL SUBMISSION	11/20/2014	ILB
0	60% SUBMISSION	07/23/2017	ILB

NAVFAC

SEAL

PWD-MAINE IN HOUSE DESIGN

APPROVED

FOR COMMANDER NAVFAC

ACTIVITY

SATISFACTORY TO DATE

DES IB DRW PFG CHK NAM
PM/DM IAN BODWELL
BRANCH MANAGER NATHAN MAHER
FEAD/PM&E AMIN BAHROUR PM&E
FIRE PROTECTION X

DEPARTMENT OF THE NAVY
NAVAL FACILITIES ENGINEERING COMMAND
PUBLIC WORKS DEPARTMENT – MAINE
PORTSMOUTH NAVAL SHIPYARD

NAVAL FACILITIES ENGINEERING COMMAND – MID-ATLANTIC
NAVAL SHIPYARD – PORTSMOUTH, NH
KITTERY, MAINE

COMPLETION OF DD #3 PROPULSOR ENCLOSURE

GENERAL PLAN AND TYPICAL SECTIONS

EPROJECT NO.: 1340001
CONSTR. CONTR. NO. 15-C-6104
NAVFAC DRAWING NO. 12684638
SHEET 8 OF 28
S3 DD3-14-639

DRAWFORM REVISION: 10 MARCH 2009

FILE NAME: P:\WE\Portsmouth\NavalShipyard\Waterfront\2014_1340001_Completion of DD #3 Propulsor Enclosure\B_Design\Drawings\Final\2014_1340001_Completion of DD #3 Propulsor Enclosure 12-18-14.dwg LAYOUT NAME: S3 PLOTTED: Thursday, December 18, 2014 - 7:50am USER: ian.bodwell

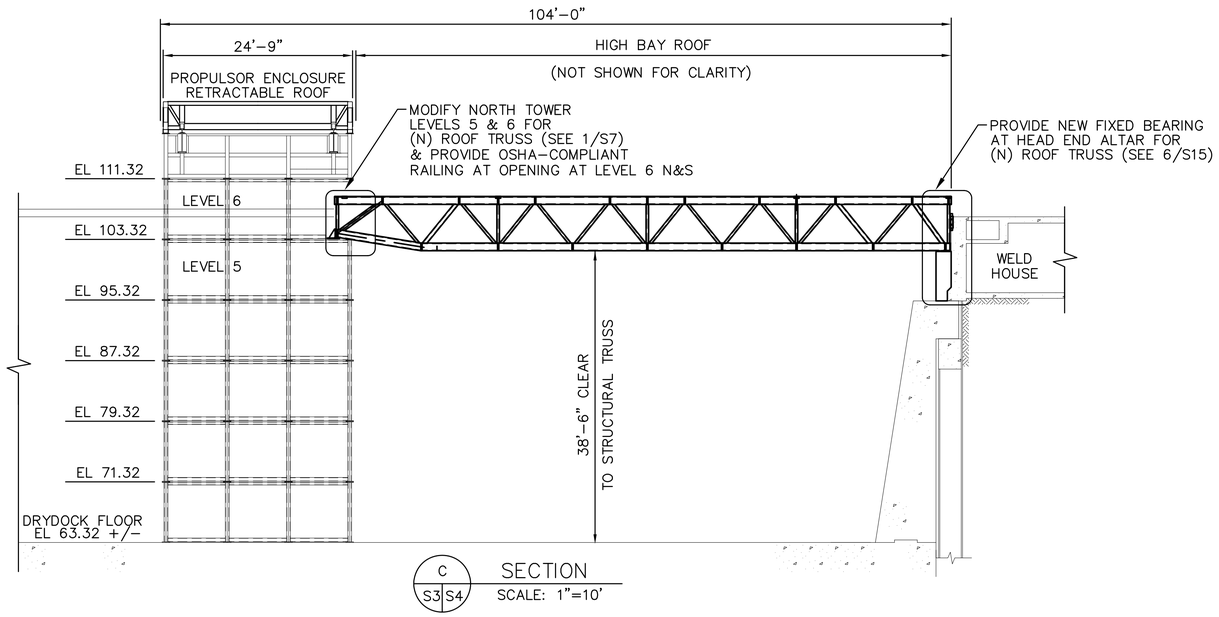

C
S3 S4
SECTION
SCALE: 1"=10'

GRAPHIC SCALE

1" = 10' 10 5 0 10 20 30
scale feet

SYM	DESCRIPTION	DATE	APPR
2	100% FINAL SUBMISSION	12/18/2014	ILB
1	100% PRE-FINAL SUBMISSION	11/20/2014	ILB
0	60% SUBMISSION	07/23/2017	ILB

NAVFAC

SEAL

PWD-MAINE
IN HOUSE DESIGN

APPROVED

FOR COMMANDER NAVFAC

ACTIVITY

SATISFACTORY TO DATE

DES IB DRW PFG CHK NAM
PM/DM IAN BODWELL
BRANCH MANAGER NATHAN MAHER
FEAD/PM&E AMIN BAHROUR PM&E
FIRE PROTECTION X

DEPARTMENT OF THE NAVY
NAVAL FACILITIES ENGINEERING COMMAND
NAVAL FACILITIES ENGINEERING COMMAND – MID-ATLANTIC
PUBLIC WORKS DEPARTMENT – MAINE
NAVAL SHIPYARD – PORTSMOUTH, NH
PORTSMOUTH NAVAL SHIPYARD
KITTERY, MAINE

COMPLETION OF DD #3
PROPULSOR ENCLOSURE

LONGITUDINAL SECTIONS

EPROJECT NO.: 1340001
CONSTR. CONTR. NO. 15-C-6104
NAVFAC DRAWING NO. 12684639
SHEET 9 OF 28

S4 DD3-14-640

DRAWFORM REVISION: 10 MARCH 2009

FILE NAME: P:\ME\Portsmouth\NavalShipyard\Waterfront\2014_1340001_Completion of DD #3 Propulsor Enclosure\B_Design\Drawings\Final\2014_1340001_Completion of DD #3 Propulsor Enclosure 12-18-14.dwg LAYOUT NAME: S4 PLOTTED: Thursday, December 18, 2014 - 7:50am USER: ian.bodwell

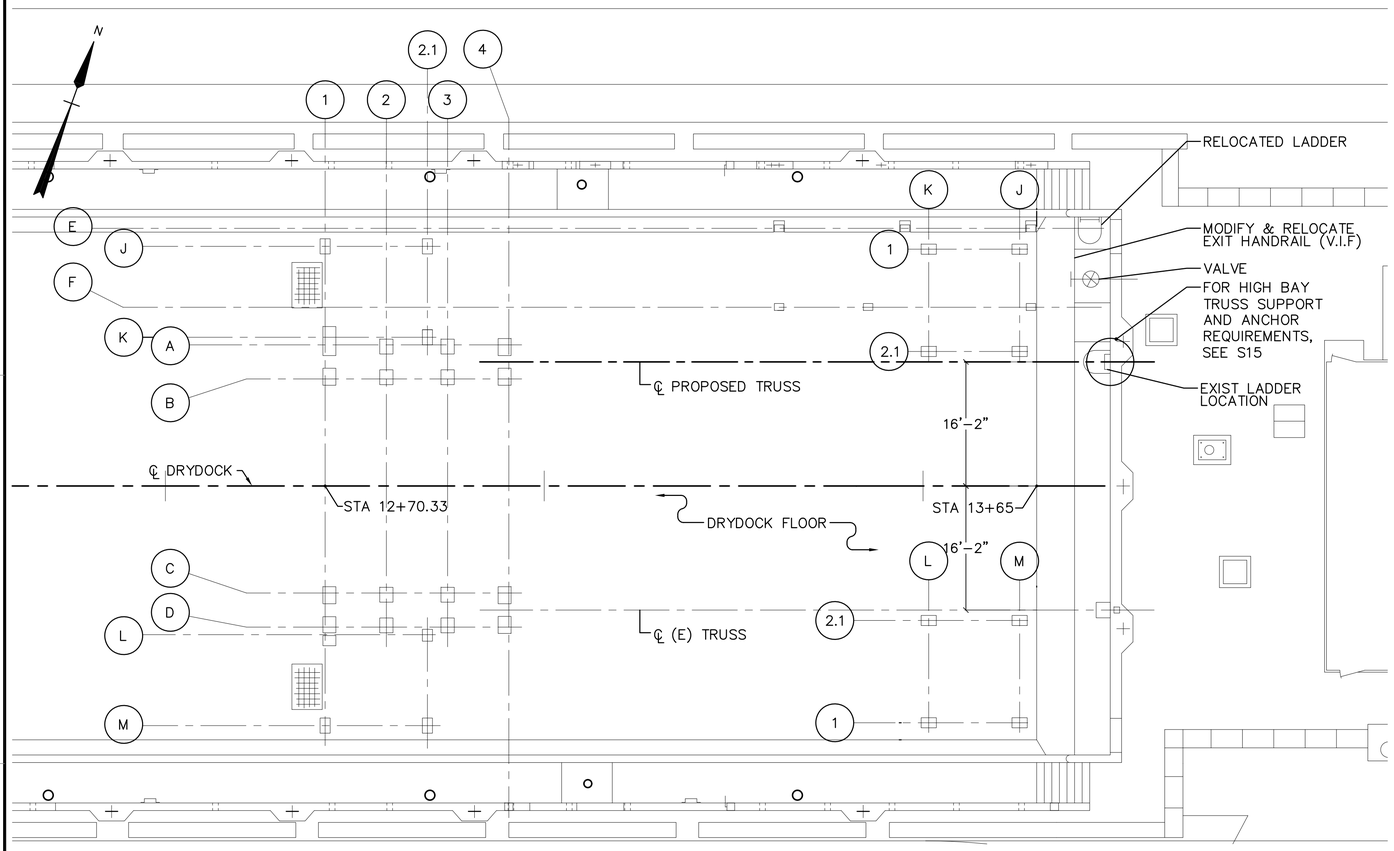

FOUNDATION PLAN
SCALE: 1"=10'

GRAPHIC SCALE

1" = 10' 10 5 0 10 20 30
scale feet

SYM	DESCRIPTION	DATE	APPR
2	100% FINAL SUBMISSION	12/18/2014	ILB
1	100% PRE-FINAL SUBMISSION	11/20/2014	ILB
0	60% SUBMISSION	07/23/2017	ILB

NAVFAC

SEAL

PWD-MAINE
IN HOUSE DESIGN

APPROVED

FOR COMMANDER NAVFAC

ACTIVITY

SATISFACTORY TO DATE

DES IB DRW PFG CHK NAM
PM/DM IAN BODWELL
BRANCH MANAGER NATHAN MAHER
FEAD/PM&E AMIN BAHROUR PM&E
FIRE PROTECTION X

DEPARTMENT OF THE NAVY
NAVAL FACILITIES ENGINEERING COMMAND
PUBLIC WORKS DEPARTMENT – MAINE
NAVAL FACILITIES ENGINEERING COMMAND ~ MID-ATLANTIC
NAVAL SHIPYARD – PORTSMOUTH, NH
PORTSMOUTH NAVAL SHIPYARD
KITTERY, MAINE

COMPLETION OF DD #3
PROPULSOR ENCLOSURE

FOUNDATION PLAN AND DETAILS

EPROJECT NO.: 1340001
CONSTR. CONTR. NO. 15-C-6104
NAVFAC DRAWING NO. 12684640
SHEET 10 OF 28

S5 DD3-14-641

DRAWFORM REVISION: 10 MARCH 2009

FILE NAME: P:\ME\PortsmouthNavalShipyard\Waterfront\2014_1340001_Completion of DD #3 Propulsor Enclosure\B_Design\Drawings\Final\2014_1340001_Completion of DD #3 Propulsor Enclosure 12-18-14.dwg LAYOUT NAME: S5 PLOTTED: Thursday, December 18, 2014 - 7:51am USER: ian.bodwell

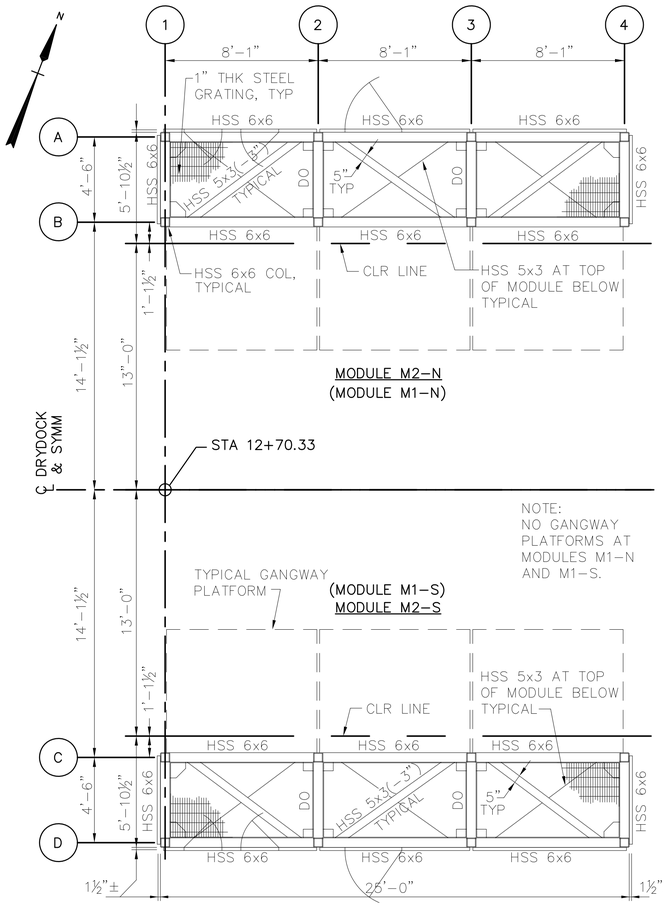

(SIMILAR AT EL 63.95)

SUPPORT TOWER FRAMING PLAN – EL 71.95

SCALE: 1/4"=1'-0"

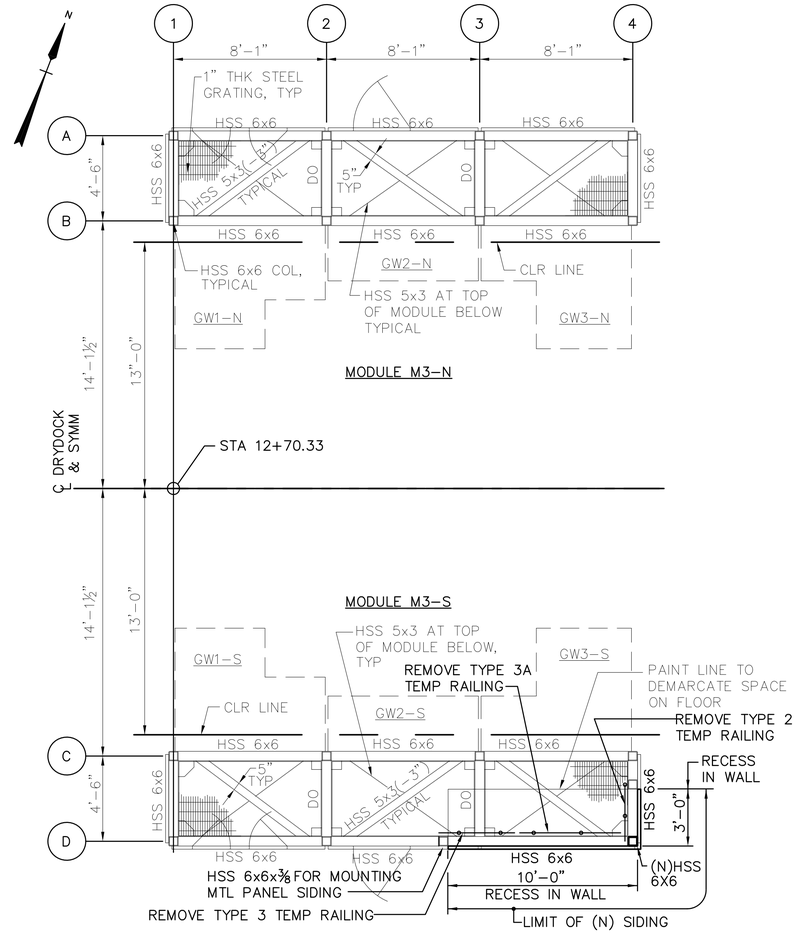

SUPPORT TOWER FRAMING PLAN – EL 79.95

SCALE: 1/4"=1'-0"

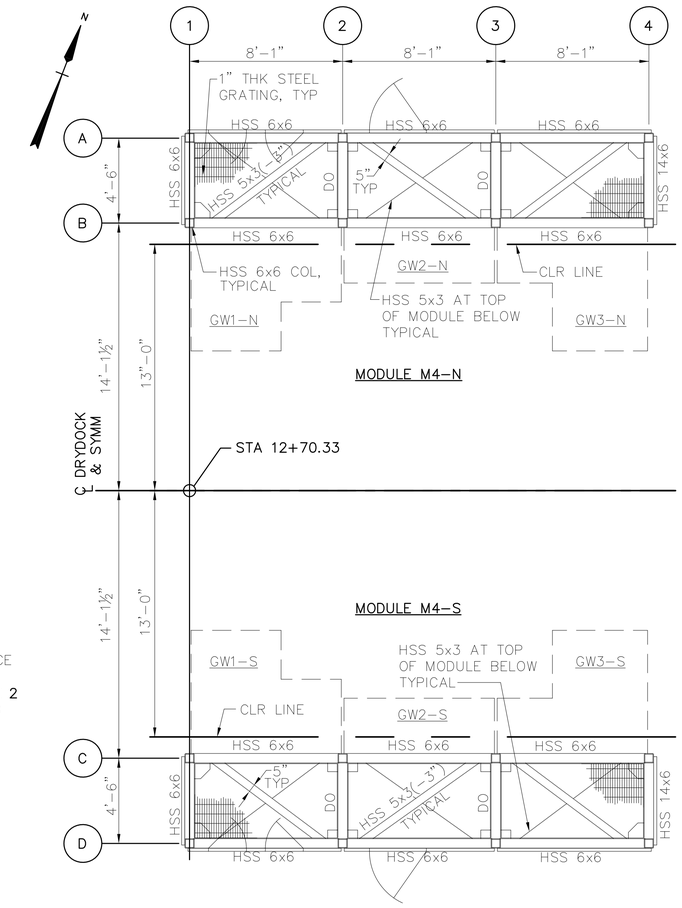

SUPPORT TOWER FRAMING PLAN – EL 87.95

SCALE: 1/4"=1'-0"

PROPULSOR ENCLOSURE FRAMING

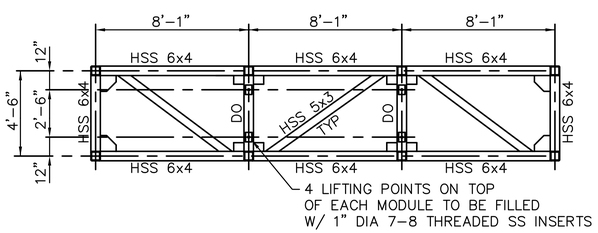

PLAN – EXISTING LIFTING POINTS AT TOP OF MODULE

SCALE: 1/4"=1'-0"

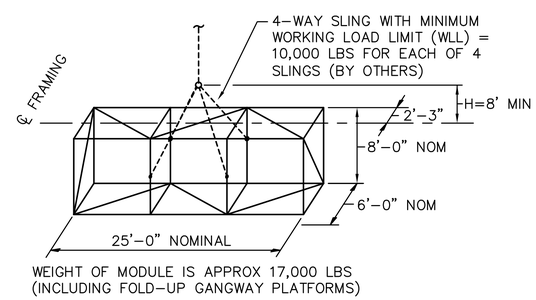

MODULE 5S & 5N LIFTING DIAGRAM

SCALE: 1/8"=1'-0"

NOTES:

1. (–3") DENOTES THAT TOP OF STEEL FOR MEMBER IS 3" BELOW FRAMING PLAN ELEVATION.

GRAPHIC SCALE

1/8" = 1' 8 4 0 8 16 24 scale feet

1/4" = 1' 4 2 0 4 8 12 scale feet

SYM	DESCRIPTION	DATE	APPR
2	100% FINAL SUBMISSION	12/18/2014	ILB
1	100% PRE-FINAL SUBMISSION	11/20/2014	ILB
0	60% SUBMISSION	07/23/2017	ILB

NAVFAC

PWD-MAINE IN HOUSE DESIGN

APPROVED

FOR COMMANDER NAVFAC

ACTIVITY

SATISFACTORY TO DATE

DES IB DRW PFG CHK NAM

PM/DM IAN BODWELL

BRANCH MANAGER NATHAN MAHER

FEAD/PM&E AMIN BAHROUR PM&E

FIRE PROTECTION X

DEPARTMENT OF THE NAVY
NAVAL FACILITIES ENGINEERING COMMAND
PUBLIC WORKS DEPARTMENT – MAINE
NAVAL FACILITIES ENGINEERING COMMAND ~ MID-ATLANTIC
NAVAL SHIPYARD – PORTSMOUTH, NH
KITTERY, MAINE
PORTSMOUTH NAVAL SHIPYARD

COMPLETION OF DD #3
PROPULSOR ENCLOSURE

PROPULSOR ENCLOSURE FRAMING PLANS – PART 1

EPROJECT NO.: 1340001

CONSTR. CONTR. NO. 15-C-6104

NAVFAC DRAWING NO. 12684641

SHEET 11 OF 28

S6 DD3-14-642

DRAWFORM REVISION: 10 MARCH 2009

FILE NAME: P:\ME\PortsmouthNavalShipyard\Waterfront\2014_1340001_Completion of DD #3 Propulsor Enclosure\B_Design\Drawings\Final\2014_1340001_Completion of DD #3 Propulsor Enclosure 12-18-14.dwg LAYOUT NAME: S6 PLOTTED: Thursday, December 18, 2014 - 7:52am USER: ian.bodwell

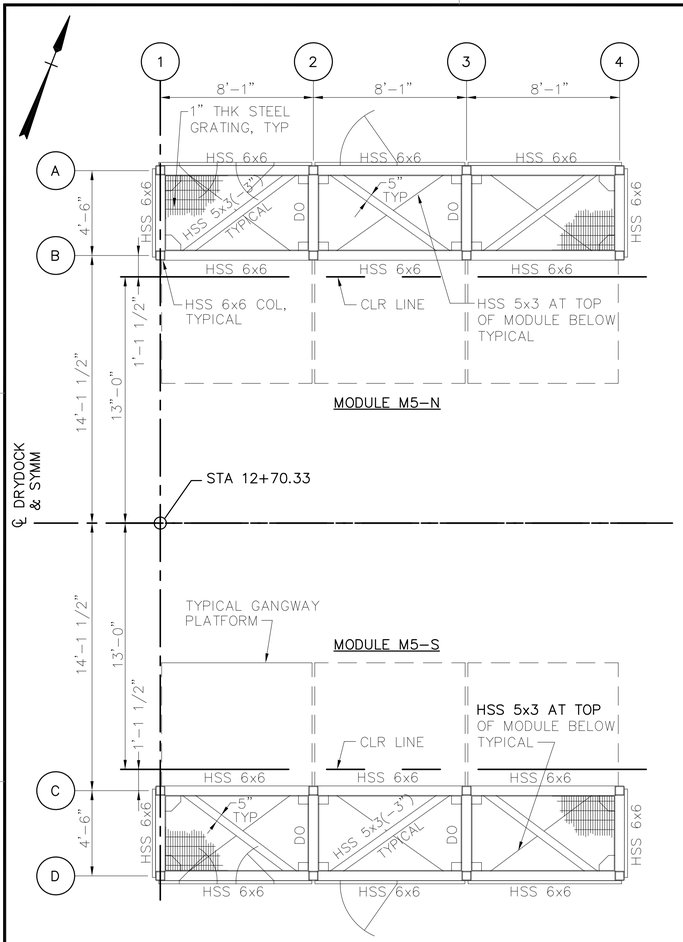

SUPPORT TOWER FRAMING PLAN – EL 95.95

SCALE: 1/4"=1'-0"

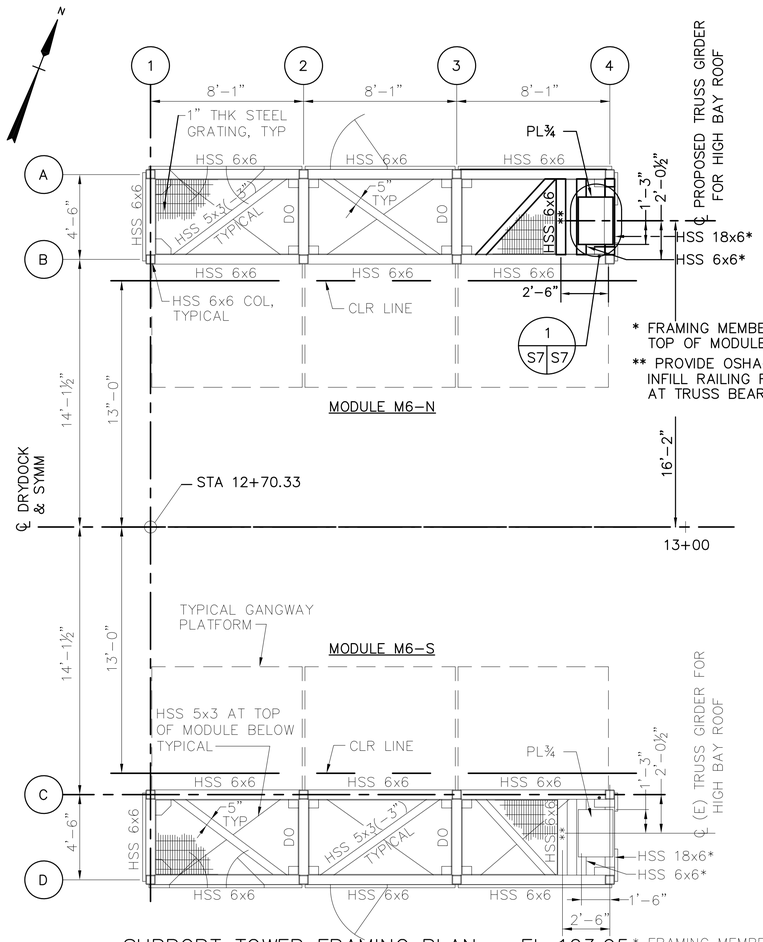

* FRAMING MEMBER AT TOP OF MODULE BELOW

** PROVIDE OSHA-COMPLIANT INFILL RAILING FOR OPENING AT TRUSS BEARING LOCATION

SUPPORT TOWER FRAMING PLAN – EL 103.95

SCALE: 1/4"=1'-0"

PROPULSOR ENCLOSURE FRAMING

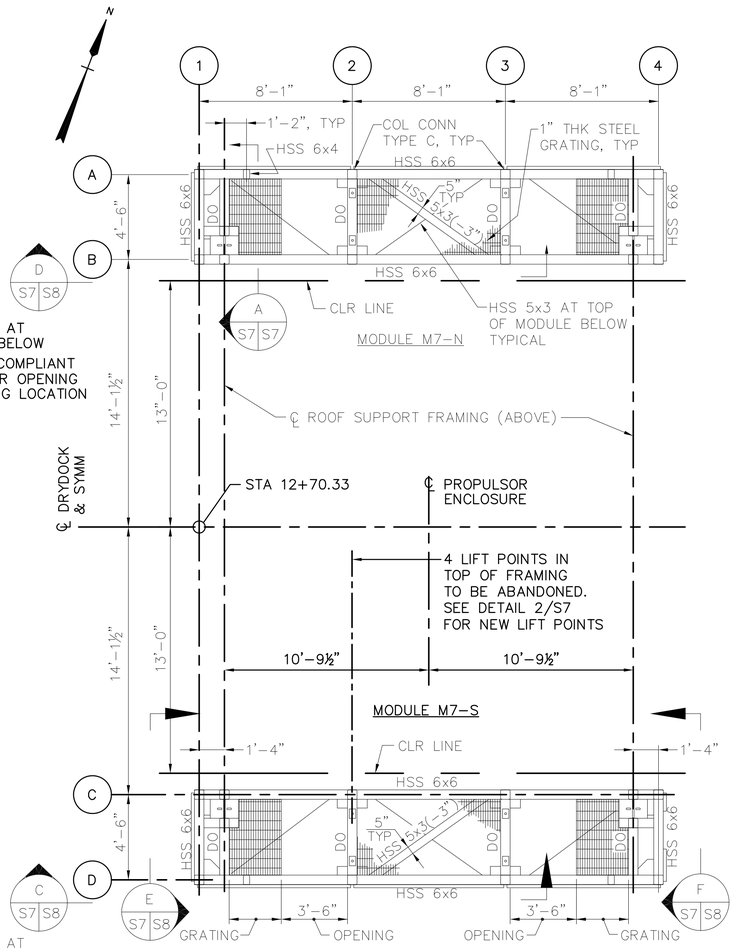

SUPPORT TOWER FRAMING PLAN – EL 111.95

SCALE: 1/4"=1'-0"

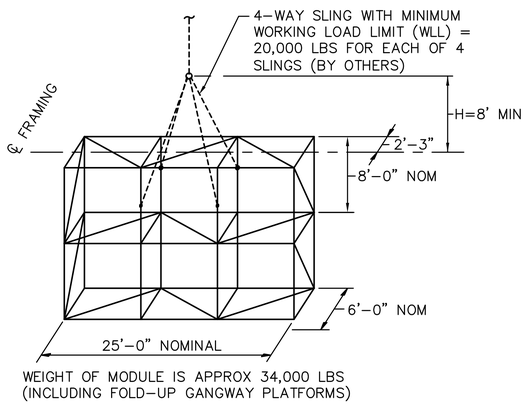

WEIGHT OF MODULE IS APPROX 34,000 LBS (INCLUDING FOLD-UP GANGWAY PLATFORMS)

JOINED MODULE LIFTING DIAGRAM

SCALE: 1/8"=1'-0"

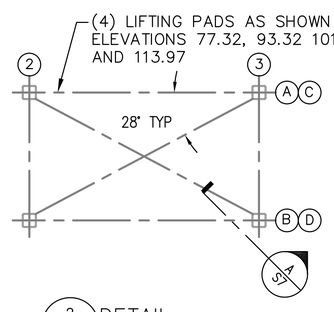

2 DETAIL S7|S7 SCALE: 3/4"=1'-0"

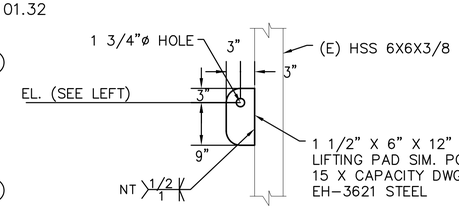

A SECTION S7|S7 SCALE: 3/4"=1'-0"

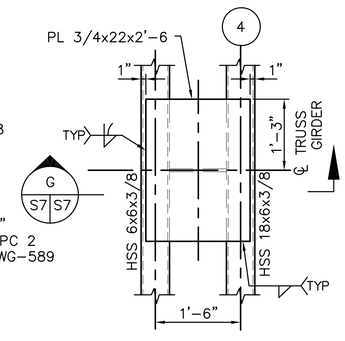

1 DETAIL S7|S7 SCALE: 3/4"=1'-0"

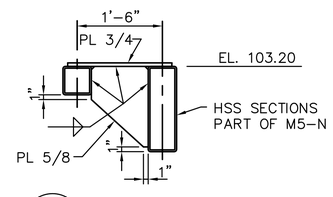

G SECTION S7|S7 SCALE: 3/4"=1'-0"

GRAPHIC SCALE

1/4" = 1' scale 4 2 0 4 8 12 feet

3/4" = 1' scale 2 1 6" 0 1 2 3 4 feet

3	UPDATED FINAL SUBMISSION	01/26/2015	ILB
2	100% FINAL SUBMISSION	12/18/2014	ILB
1	100% PRE-FINAL SUBMISSION	11/20/2014	ILB
0	60% SUBMISSION	07/23/2017	ILB
SYM	DESCRIPTION	DATE	APPR

NAVFAC

SEAL

PWD-MAINE IN HOUSE DESIGN

APPROVED

FOR COMMANDER NAVFAC

ACTIVITY

SATISFACTORY TO DATE

DES IB DRW PFG CHK NAM

PM/DM IAN BODWELL

BRANCH MANAGER NATHAN MAHER

FEAD/PM&E AMIN BAHROUR PM&E

FIRE PROTECTION X

DEPARTMENT OF THE NAVY
NAVAL FACILITIES ENGINEERING COMMAND
PUBLIC WORKS DEPARTMENT – MAINE
PORTSMOUTH NAVAL SHIPYARD

NAVAL FACILITIES ENGINEERING COMMAND ~ MID-ATLANTIC
NAVAL SHIPYARD – PORTSMOUTH, NH
KITTERY, MAINE

COMPLETION OF DD #3
PROPULSOR ENCLOSURE

PROPULSOR ENCLOSURE FRAMING PLANS – PART 2

EPROJECT NO.: 1340001

CONSTR. CONTR. NO. 15-C-6104

NAVFAC DRAWING NO. 12684642

SHEET 12 OF 28

S7 DD3-14-643

DRAWFORM REVISION: 10 MARCH 2009

FILE NAME: P:\ME\PortsmouthNavalShipyard\Waterfront\2014_1340001_Completion of DD #3 Propulsor Enclosure\B_Design\Drawings\Final\2014_1340001_Completion of DD #3 Propulsor Enclosure 12-18-14.dwg LAYOUT NAME: S7 PLOTTED: Monday, January 26, 2015 - 12:21pm USER: ion.bodwell

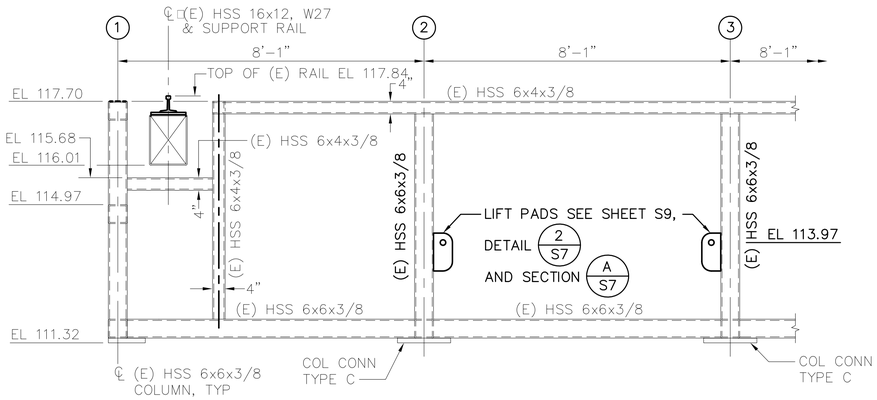

C / S7 S8 PART ELEVATION – COLUMN LINE (D)
(COLUMN LINE (A) SIMILAR)
SCALE: 1/2"=1'-0"

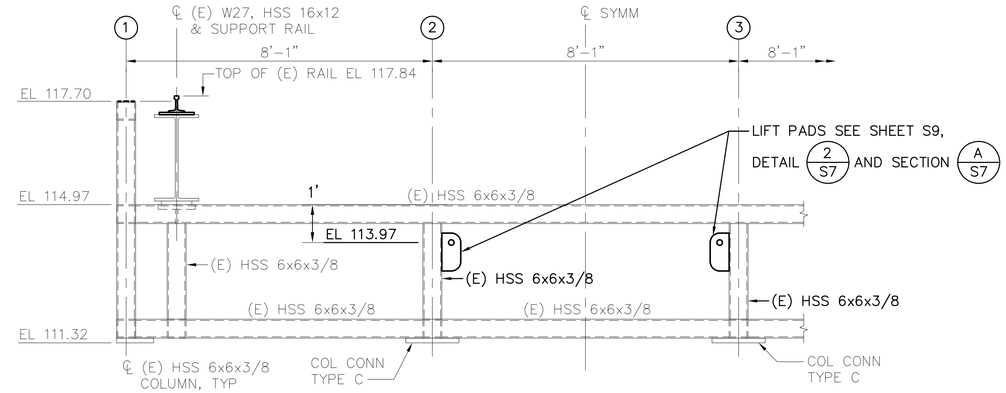

D / S7 S8 PART ELEVATION – COLUMN LINE (B)
(COLUMN LINE (C) SIMILAR)
SCALE: 1/2"=1'-0"

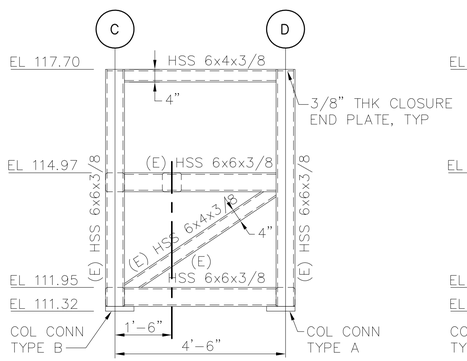

E / S7 S8 ELEVATION
SCALE: 1/2"=1'-0"

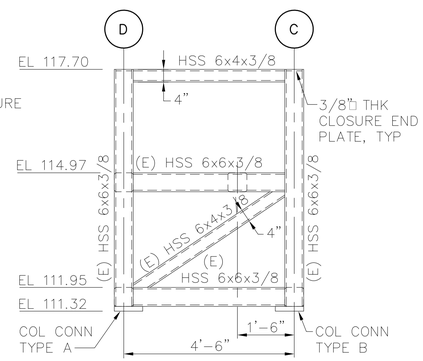

F / S7 S8 ELEVATION
SCALE: 1/2"=1'-0"

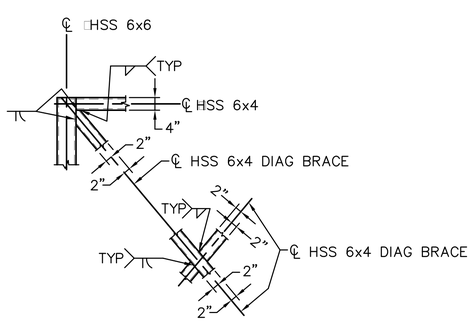

AT VERTICAL DIAGONAL BRACING

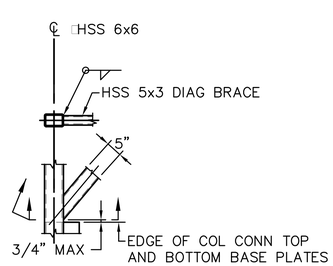

AT CEILING FRAMING OF MODULE

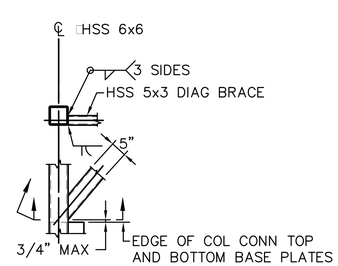

AT FLOOR FRAMING OF MODULE

DIAGONAL BRACING CONNECTION DETAILS
SCALE: 1/2"=1'-0"

NOTES:

1. CONNECTION BETWEEN HSS FRAMING MEMBERS OF MODULES SHALL BE MADE WITH 3/8" FILLET WELDS AND FLARE BEVEL GROOVE WELDS UNLESS INDICATED OTHERWISE.

GRAPHIC SCALE
1/2" = 1' 2 1 0 2 4 6
scale feet

SYM	DESCRIPTION	DATE	APPR
2	100% FINAL SUBMISSION	12/18/2014	ILB
1	100% PRE-FINAL SUBMISSION	11/20/2014	ILB
0	60% SUBMISSION	07/23/2017	ILB

NAVFAC

SEAL

PWD-MAINE
IN HOUSE DESIGN

APPROVED
FOR COMMANDER NAVFAC
ACTIVITY
SATISFACTORY TO DATE

DES IB DRW PFG CHK NAM
PM/DM IAN BODWELL
BRANCH MANAGER NATHAN MAHER
FEAD/PM&E AMIN BAHROUR PM&E
FIRE PROTECTION X

DEPARTMENT OF THE NAVY
NAVAL FACILITIES ENGINEERING COMMAND
PUBLIC WORKS DEPARTMENT – MAINE
PORTSMOUTH NAVAL SHIPYARD
NAVAL FACILITIES ENGINEERING COMMAND
NAVAL SHIPYARD – PORTSMOUTH, NH
KITTERY, MAINE

COMPLETION OF DD #3
PROPULSOR ENCLOSURE

PROPULSOR ENCLOSURE FRAMING ELEVATIONS AND DETAILS

EPROJECT NO.: 1340001
CONSTR. CONTR. NO. 15-C-6104
NAVFAC DRAWING NO. 12684643
SHEET 13 OF 28
S8 DD3-14-644

DRAWFORM REVISION: 10 MARCH 2009

FILE NAME: P:\ME\PortsmouthNavalShipyard\Waterfront\2014_1340001_Completion of DD #3 Propulsor Enclosure\B_Design\Drawings\Final\2014_1340001_Completion of DD #3 Propulsor Enclosure 12-18-14.dwg LAYOUT NAME: S8 PLOTTED: Thursday, December 18, 2014 - 8:07am USER: ian.bodwell

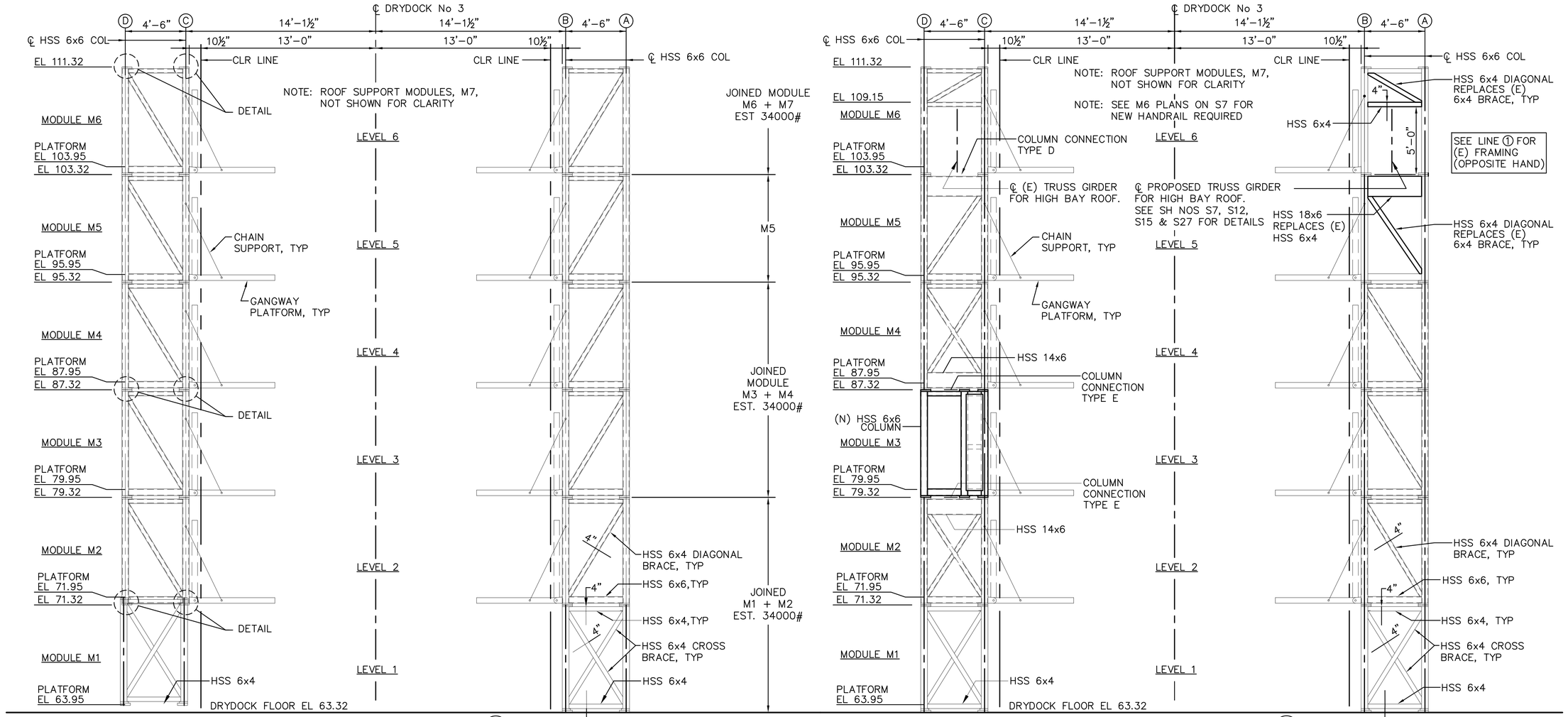

FRAMING AT COLUMN LINE 1
SCALE: 1/4"=1'-0"

FRAMING AT COLUMN LINE 4
SCALE: 1/4"=1'-0"

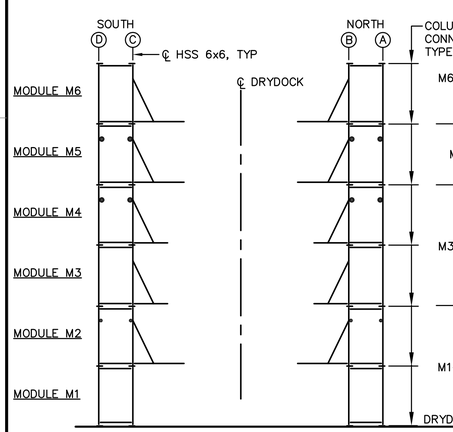

FRAMING AT COLUMN LINE 2
SCALE: 1"=10'

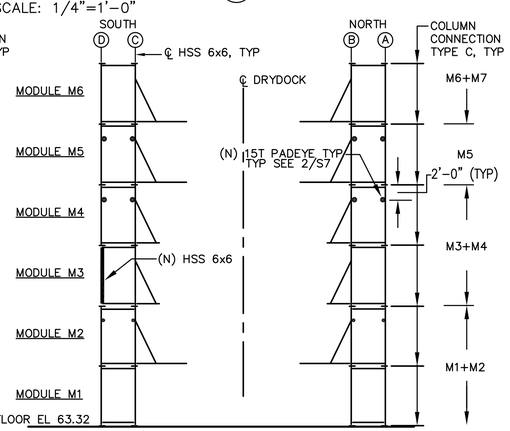

FRAMING AT COLUMN LINE 3
SCALE: 1"=10'

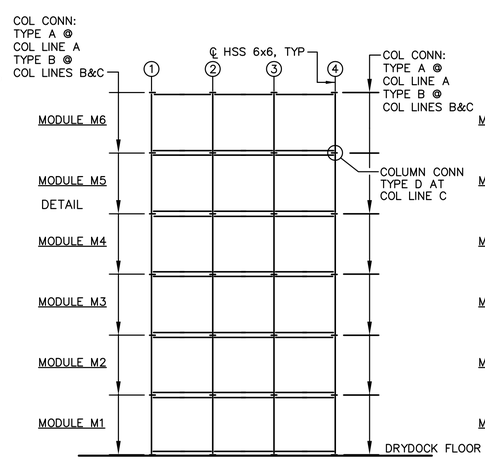

COLUMN LINE B & C SIMILAR

FRAMING AT COLUMN LINE A
SCALE: 1"=10'

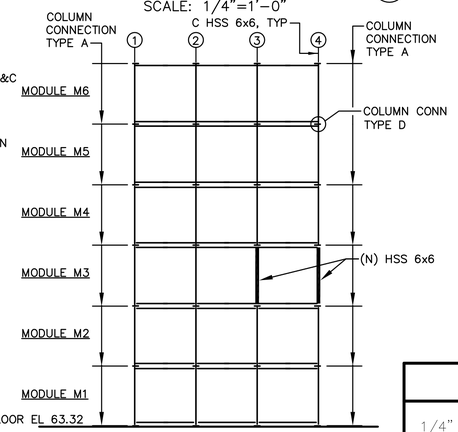

FRAMING AT COLUMN LINE D
SCALE: 1"=10'

NOTES:

1. STEEL FRAMING FOR MODULES ARE HOLLOW STRUCTURAL SECTIONS, HSS, CONFORMING TO THE REQUIREMENTS OF ASTM A 500, GR B. PROVIDE 3/8" THK END CAP PLATES TO SEAL ANY EXPOSED HSS ENDS.
2. UNLESS OTHERWISE INDICATED, ALL HSS SHALL HAVE 3/8" WALL THICKNESS.
3. MEMBERS SHOWN SHALL BE CONSIDERED EXISTING UNLESS IDENTIFIED AS NEW (N)
4. TACK WELD NUTS OR GALL THREADS AFTER JOINING MODULES TOGETHER PER THIS SHEET

GRAPHIC SCALE

1/4" = 1' 4 2 0 4 8 12 scale feet

1" = 10' 10 5 0 10 20 30 scale feet

SYM	DESCRIPTION	DATE	APPR
2	100% FINAL SUBMISSION	12/18/2014	ILB
1	100% PRE-FINAL SUBMISSION	11/20/2014	ILB
0	60% SUBMISSION	07/23/2017	ILB

NAVFAC

PWD-MAINE IN HOUSE DESIGN

SEAL

APPROVED

FOR COMMANDER NAVFAC

ACTIVITY

SATISFACTORY TO DATE

DES IB DRW PFG CHK NAM

PM/DM IAN BODWELL

BRANCH MANAGER NATHAN MAHER

FEAD/PM&E AMIN BAHROUR PM&E

FIRE PROTECTION X

DEPARTMENT OF THE NAVY
NAVAL FACILITIES ENGINEERING COMMAND
PUBLIC WORKS DEPARTMENT – MAINE
PORTSMOUTH NAVAL SHIPYARD

NAVAL FACILITIES ENGINEERING COMMAND – MID-ATLANTIC
NAVAL SHIPYARD – PORTSMOUTH, NH
KITTERY, MAINE

COMPLETION OF DD #3 PROPULSOR ENCLOSURE

PROPULSOR ENCLOSURE FRAMING ELEVATIONS

EPROJECT NO.: 1340001

CONSTR. CONTR. NO. 15-C-6104

NAVFAC DRAWING NO. 12684644

SHEET 14 OF 28

S9 DD3-14-645

DRAWFORM REVISION: 10 MARCH 2009

FILE NAME: P:\NE\PortsmouthNavalShipyard\Waterfront\2014_1340001_Completion of DD #3 Propulsor Enclosure\B_Design\Drawings\Final\2014_1340001_Completion of DD #3 Propulsor Enclosure 12-18-14.dwg LAYOUT NAME: S9 PLOTTED: Thursday, December 18, 2014 - 10:01am USER: ian.bodwell

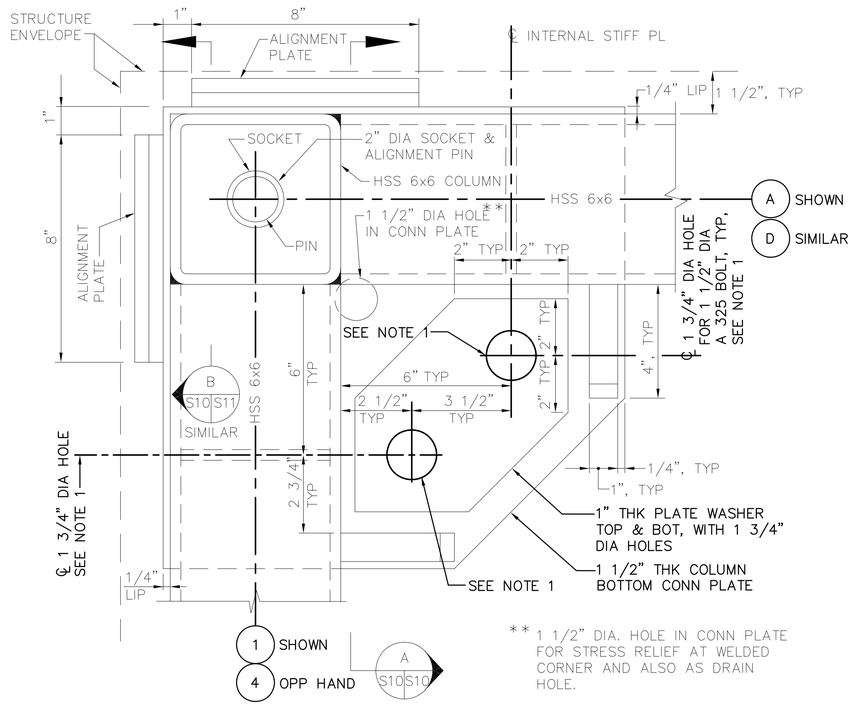

PLAN AT COLUMN BOTTOM CONNECTION PLATE – TYPE A
(COLUMN TOP CONNECTION PLATE SIMILAR)
SCALE: 3/8"= 1"

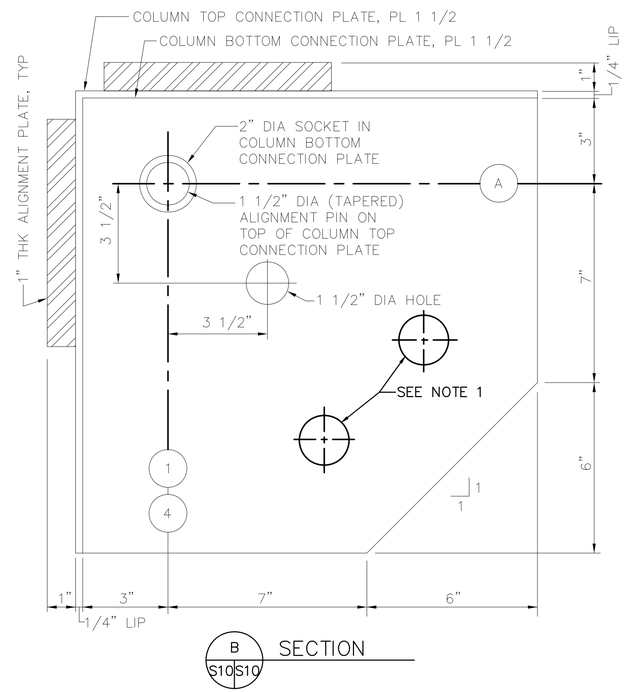

B S10 S10 SECTION

COLUMN CONNECTION PLATE DETAIL – TYPE A
(TYPE B SIMILAR EXCEPT WITHOUT ALIGNMENT PLATES, STIFFENER PLATES AND ASSOCIATED 1/4" LIP)
SCALE: 3/8"= 1"

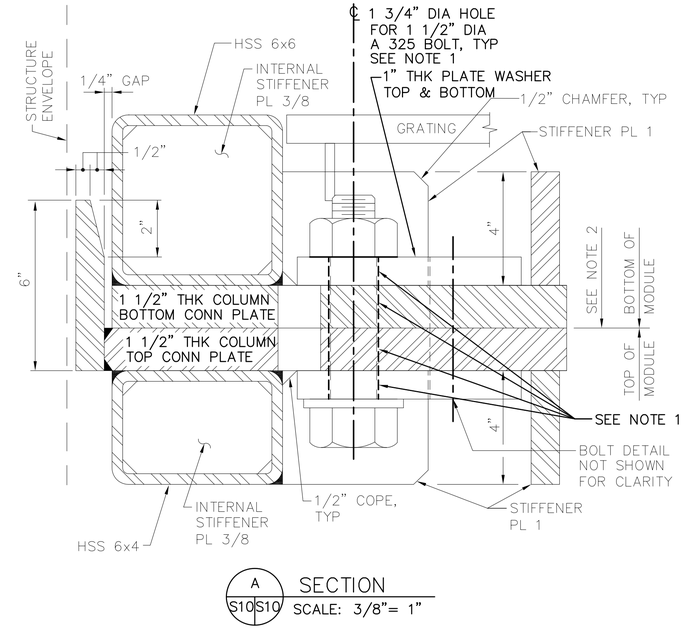

A S10 S10 SECTION
SCALE: 3/8"= 1"

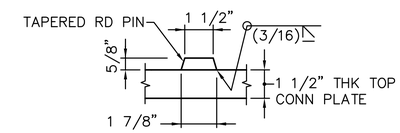

DETAIL
ALIGNMENT PIN AT COLUMN TOP PLATE
SCALE: 3"=1'–0"

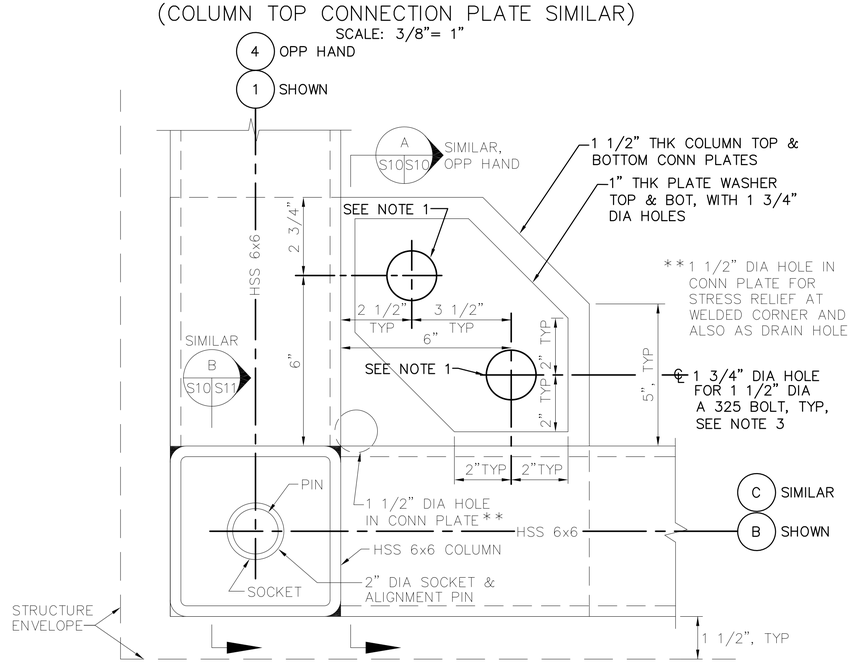

PLAN AT COLUMN BOTTOM CONNECTION PLATE – TYPE B
(COLUMN TOP CONNECTION PLATE SIMILAR)
SCALE: 3/8"= 1"

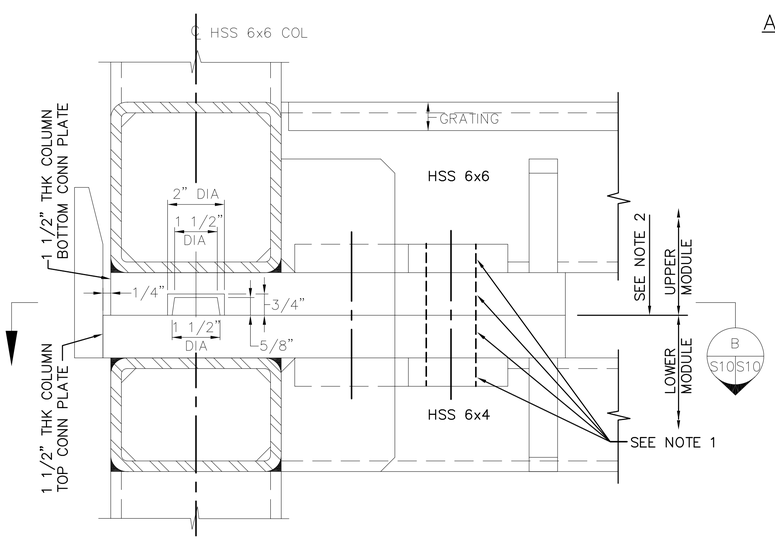

ELEVATION – TYPE A COLUMN CONNECTION
(TYPE B SIMILAR EXCEPT WITHOUT ALIGNMENT PLATES, STIFFENER PLATES AND INTERNAL STIFFENER PLATES)
SCALE: 3/8"= 1"

NOTES:

1. ENLARGED (E) 1 5/8" HOLES IN BASE AND CAP PLATES AND WASHER PLATES TO 1 3/4"ø.
2. CONTRACTOR TO TEST FIT ADJACENT LINES TO ENSURE ALIGNMENT. ADDITIONAL HOLE ENGAGEMENT SHALL BE PERFORMED WITH CONTRACTING OFFICER APPROVAL TO ENSURE PROPER FIT UP.
3. PROPULSOR ENLCOUSRE BEARING PLATE SHALL REMAIN FASTENED TO MODULE 1 BASE PLATE.

GRAPHIC SCALE

3/8"=1'–0" scale 0 1' 2' 4' 6' 8' feet

3"=1'–0" scale 1' 9" 6" 3" 0' 3" feet

SYM	DESCRIPTION	DATE	APPR
2	100% FINAL SUBMISSION	12/18/2014	ILB
1	100% PRE-FINAL SUBMISSION	11/20/2014	ILB
0	60% SUBMISSION	07/23/2017	ILB

NAVFAC

PWD-MAINE IN HOUSE DESIGN

APPROVED
FOR COMMANDER NAVFAC
ACTIVITY
SATISFACTORY TO DATE

DES IB DRW PFG CHK NAM
PM/DM IAN BODWELL
BRANCH MANAGER NATHAN MAHER
FEAD/PM&E AMIN BAHROUR PM&E
FIRE PROTECTION X

DEPARTMENT OF THE NAVY
NAVAL FACILITIES ENGINEERING COMMAND
PUBLIC WORKS DEPARTMENT – MAINE
PORTSMOUTH NAVAL SHIPYARD

NAVAL FACILITIES ENGINEERING COMMAND ~ MID-ATLANTIC
NAVAL SHIPYARD – PORTSMOUTH, NH
KITTERY, MAINE

COMPLETION OF DD #3 PROPULSOR ENCLOSURE

PROPULSOR ENCLOSURE DETAILS – PART 1

EPROJECT NO.: 1340001
CONSTR. CONTR. NO. 15-C-6104
NAVFAC DRAWING NO. 12684645
SHEET 15 OF 28
S10 DD3-14-646

DRAWFORM REVISION: 10 MARCH 2009

FILE NAME: P:\ME\PortsmouthNavalShipyard\Waterfront\2014_1340001_Completion of DD #3 Propulsor Enclosure\B_Design\Drawings\Final\2014_1340001_Completion of DD #3 Propulsor Enclosure 12-18-14.dwg LAYOUT NAME: S10 PLOTTED: Thursday, December 18, 2014 – 8:09am USER: ian.bodwell

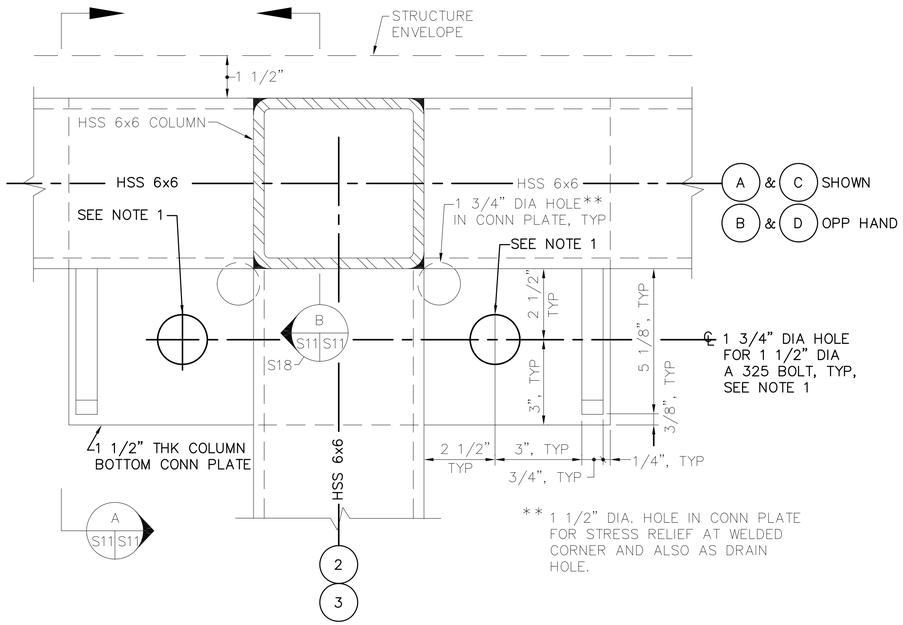

PLAN AT COLUMN BOTTOM CONNECTION PLATE – TYPE C
(COLUMN TOP CONNECTION PLATE SIMILAR)
SCALE: 3/8"= 1"

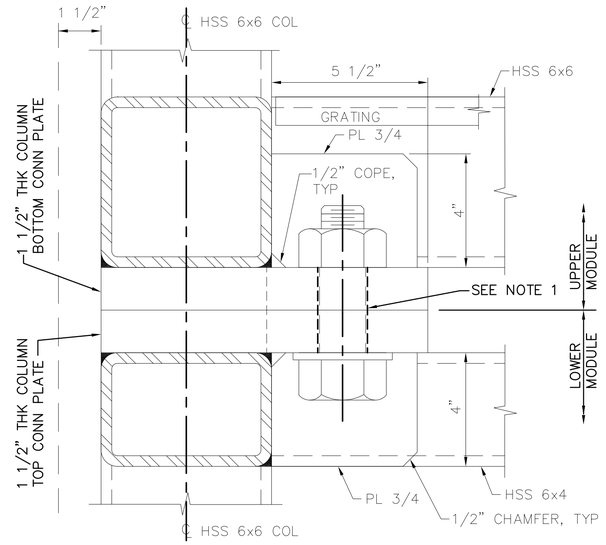

A S11 S11 SECTION
SCALE: 3/8"= 1"

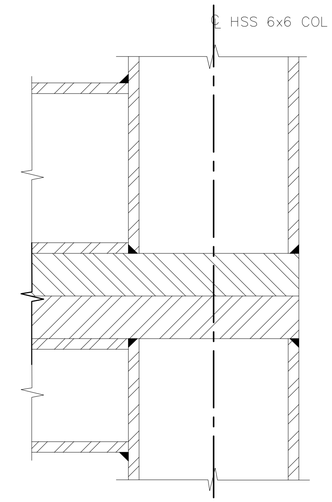

B S11 S11 SECTION
S10
SCALE: 3/8"= 1"

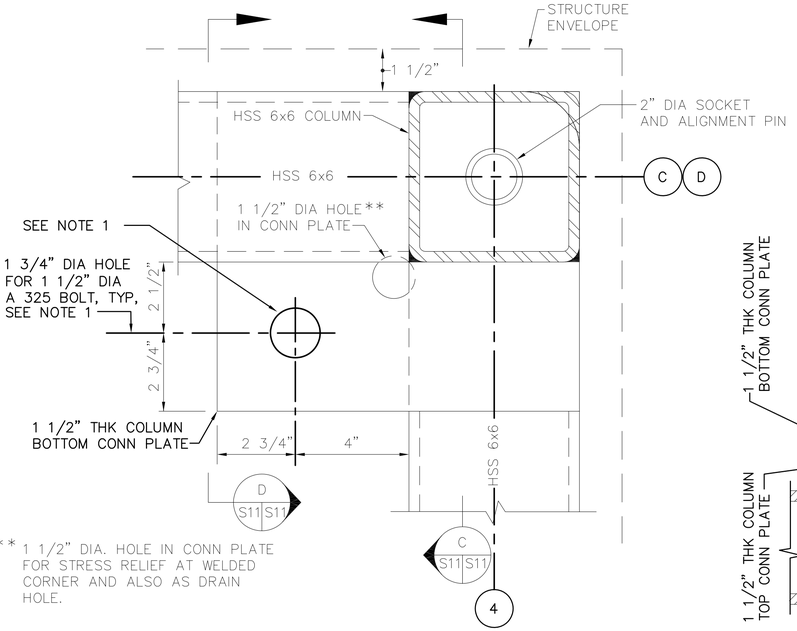

PLAN AT COLUMN BOTTOM CONNECTION PLATE – TYPE D
(COLUMN TOP CONNECTION PLATE SIMILAR)
SCALE: 3/8"= 1"

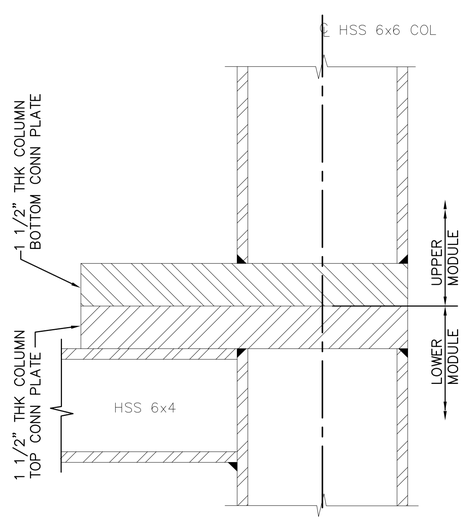

C S11 S11 SECTION
SCALE: 3/8"= 1"

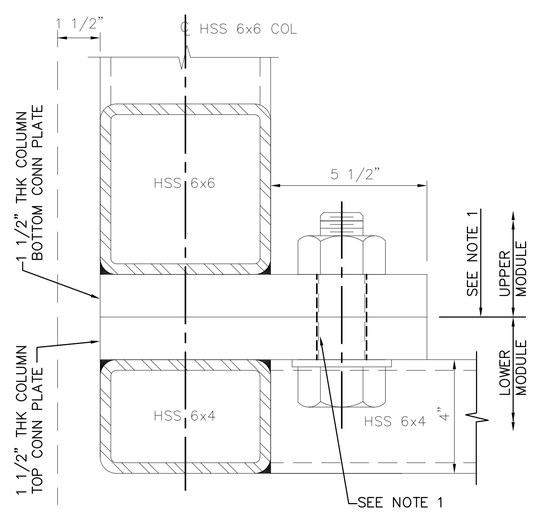

D S11 S11 SECTION
SCALE: 3/8"= 1"

NOTES:

1. ENLARGED (E) 1 5/8" HOLES IN BASE AND CAP PLATES AND WASHER PLATES TO 1 3/4"ø.
2. CONTRACTOR TO TEST FIT ADJACENT LINES TO ENSURE ALIGNMENT. ADDITIONAL HOLE ENGAGEMENT SHALL BE PERFORMED WITH CONTRACTING OFFICER APPROVAL TO ENSURE PROPER FIT UP.

GRAPHIC SCALE
3/8"=1'-0" 0 1' 2' 4' 6' 8' scale feet

SYM	DESCRIPTION	DATE	APPR
2	100% FINAL SUBMISSION	12/18/2014	ILB
1	100% PRE-FINAL SUBMISSION	11/20/2014	ILB
0	60% SUBMISSION	07/23/2017	ILB

NAVFAC

PWD-MAINE IN HOUSE DESIGN

APPROVED
FOR COMMANDER NAVFAC
ACTIVITY
SATISFACTORY TO DATE

DES IB DRW PFG CHK NAM
PM/DM IAN BODWELL
BRANCH MANAGER NATHAN MAHER
FEAD/PM&E AMIN BAHROUR PM&E
FIRE PROTECTION X

DEPARTMENT OF THE NAVY
NAVAL FACILITIES ENGINEERING COMMAND
PUBLIC WORKS DEPARTMENT – MAINE
PORTSMOUTH NAVAL SHIPYARD

NAVAL FACILITIES ENGINEERING COMMAND – MID-ATLANTIC
NAVAL SHIPYARD – PORTSMOUTH, NH
KITTERY, MAINE

COMPLETION OF DD #3 PROPULSOR ENCLOSURE

PROPULSOR ENCLOSURE DETAILS – PART 2

EPROJECT NO.: 1340001
CONSTR. CONTR. NO. 15-C-6104
NAVFAC DRAWING NO. 12684646
SHEET 16 OF 28
S11 DD3-14-647

DRAWFORM REVISION: 10 MARCH 2009

FILE NAME: P:\WE\Portsmouth\NavalShipyard\Waterfront\2014_1340001_Completion of DD #3 Propulsor Enclosure\B_Design\Drawings\Final\2014_1340001_Completion of DD #3 Propulsor Enclosure 12-18-14.dwg LAYOUT NAME: S11 PLOTTED: Thursday, December 18, 2014 - 8:10am USER: ian.bodwell

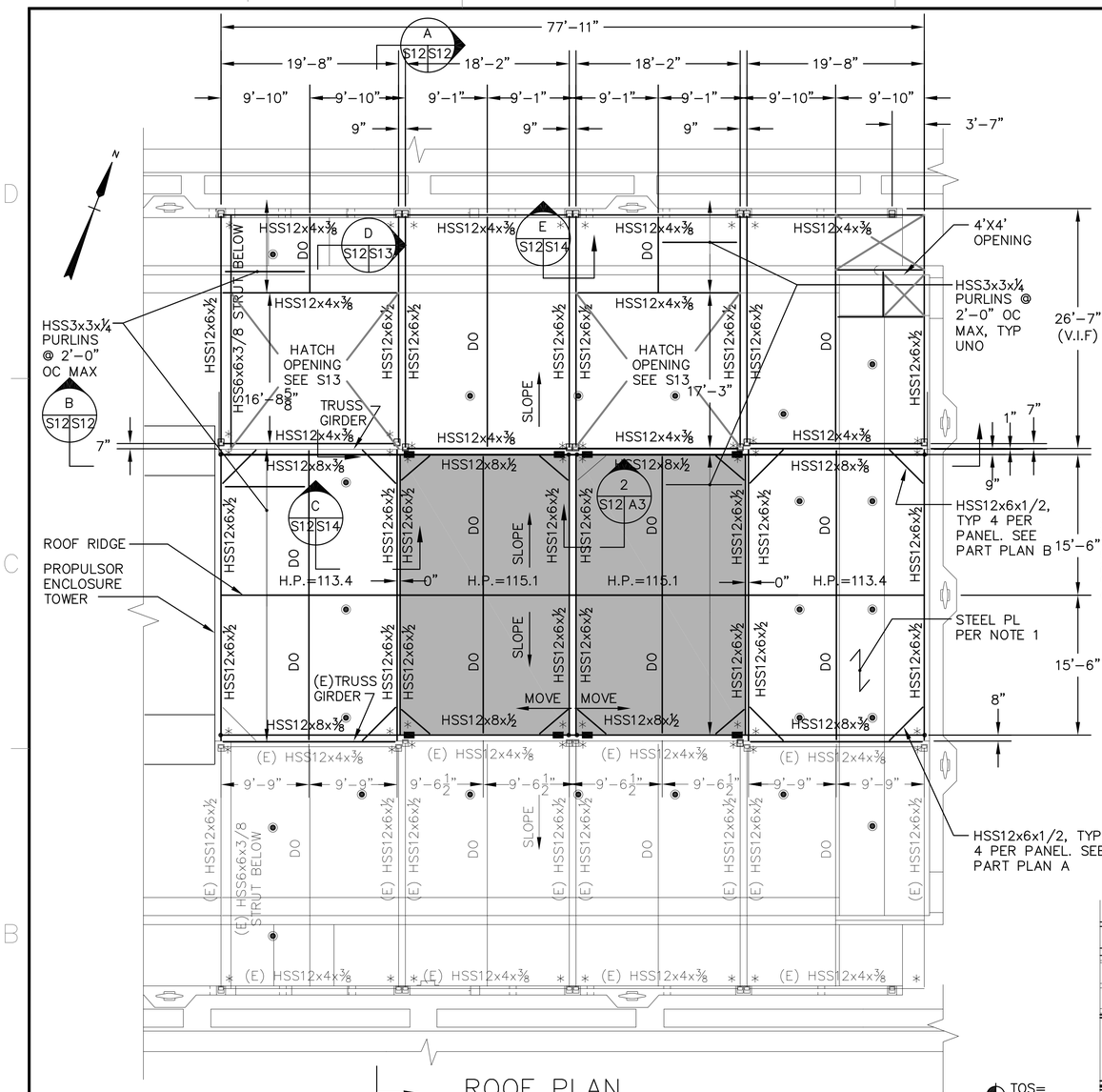

ROOF PLAN
SCALE: 1/8"=1'-0"

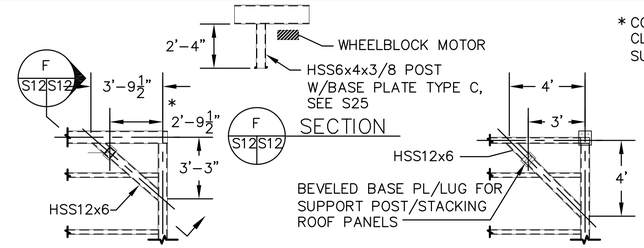

PART PLAN A
SCALE: 1/4"=1'-0"

PART PLAN B
SCALE: 1/4"=1'-0"

* COORDINATE LOCATION TO CLEAR MOTOR AND RAIL SUPPORT PL'S.

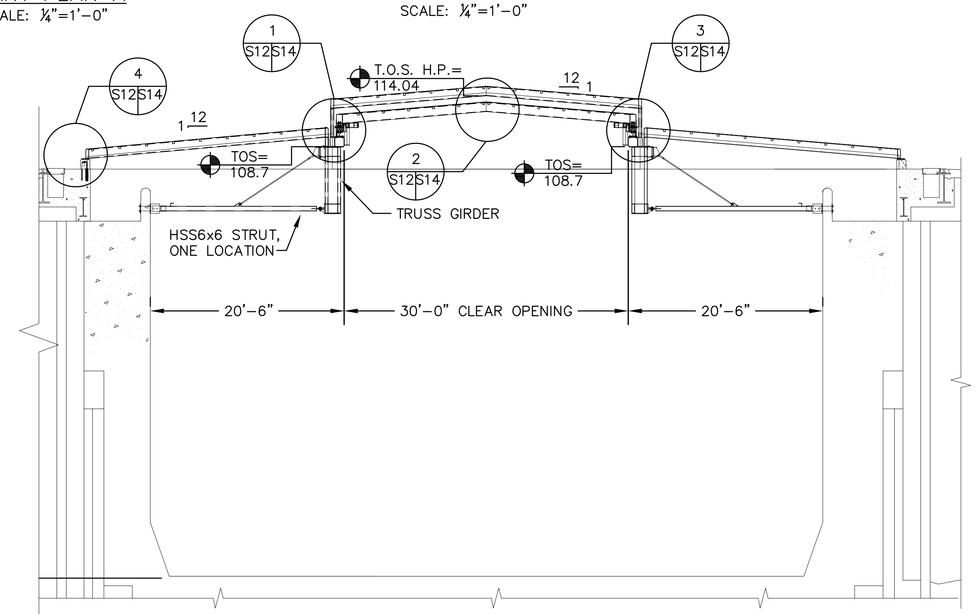

SECTION
1/8"=1'-0"

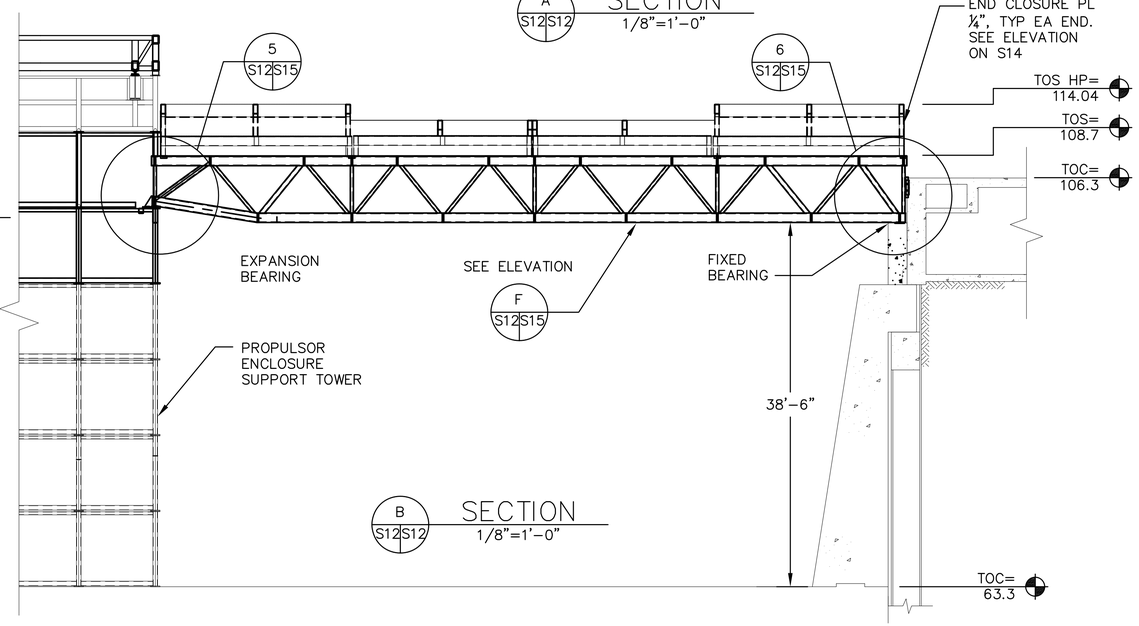

SECTION
1/8"=1'-0"

NOTES:

1. STEEL PLATE SHALL BE 3/8" THICK AT TWO RETRACTABLE PANELS. STEEL PLATE SHALL BE 1/4" THICK AT ALL OTHER PANELS.
2. PAINT ALL STRUCTURAL STEEL. TOP SURFACE OF STEEL PLATE SHALL BE PAINTED WITH SLIP RESISTANT COATING.
3. MOUNTING PLATE FOR ROOF SAFETY TIE-OFF ANCHORS SHALL BE LOCATED AS SHOWN. SEE DETAIL A/S48. LOCATE MOUTING PLATE OVER PURLIN.
4. ALL OPENINGS TO THE EXTERIOR SHALL BE SEALED WITH 1/4" STEEL CLOSURE PLATE.
5. SEE SHEET A4 FOR ROOFTOP REMOVABLE GUARDRAIL LOCATIONS.
6. REMOVE (E) 3/4"x10"x10" BASE PLATE & HSS6X6 SLEEVE ON TOP OF (E) TRUSS @ 5' O.C. AND RESTORE COATING AT THESE LOCATIONS.

– RETRACTABLE PANEL ON WHEEL BLOCKS/RAIL SYSTEM

■ – WHEEL BLOCK

◉ – MOUNTING PLATE FOR ROOF SAFETY TIE-OFF ANCHORS

* – LIFTING POINTS
SEE S13 FOR RR1 & RR4
SEE S16 FOR FR1 – FR4
SEE S13 FOR FR1 & FR4 HATCHES

PROVIDE RAIL STOPS AT ALL RAIL ENDS (8 LOCATIONS) SUFFICIENT FOR APPLICATION.

GRAPHIC SCALE

1/4" = 1' — 4 2 0 4 8 12 — scale feet

1/8" = 1' — 8 4 0 8 16 24 — scale feet

SYM	DESCRIPTION	DATE	APPR
3	UPDATED FINAL SUBMISSION	01/26/2015	ILB
2	100% FINAL SUBMISSION	12/18/2014	ILB
1	100% PRE-FINAL SUBMISSION	11/20/2014	ILB
0	60% SUBMISSION	07/23/2017	ILB

NAVFAC

PWD-MAINE IN HOUSE DESIGN

APPROVED

FOR COMMANDER NAVFAC

ACTIVITY

SATISFACTORY TO DATE

DES IB DRW PFG CHK NAM
PM/DM IAN BODWELL
BRANCH MANAGER NATHAN MAHER
FEAD/PM&E AMIN BAHROUR PM&E
FIRE PROTECTION X

DEPARTMENT OF THE NAVY
NAVAL FACILITIES ENGINEERING COMMAND
PUBLIC WORKS DEPARTMENT – MAINE
NAVAL FACILITIES ENGINEERING COMMAND – MID-ATLANTIC
NAVAL SHIPYARD – PORTSMOUTH, NH
KITTERY, MAINE
PORTSMOUTH NAVAL SHIPYARD

COMPLETION OF DD #3 PROPULSOR ENCLOSURE

HIGH BAY ROOF PLAN AND SECTIONS

EPROJECT NO.: 1340001
CONSTR. CONTR. NO. 15-C-6104
NAVFAC DRAWING NO. 12684647
SHEET 17 OF 28
S12 DD3-14-648

DRAWFORM REVISION: 10 MARCH 2009

FILE NAME: P:\WE\PortsmouthNavalShipyard\Waterfront\2014_1340001_Completion of DD #3 Propulsor Enclosure\B_Design\Drawings\Final\2014_1340001_Completion of DD #3 Propulsor Enclosure 12-18-14.dwg LAYOUT NAME: S12 PLOTTED: Monday, January 26, 2015 – 12:22pm USER: ian.bodwell

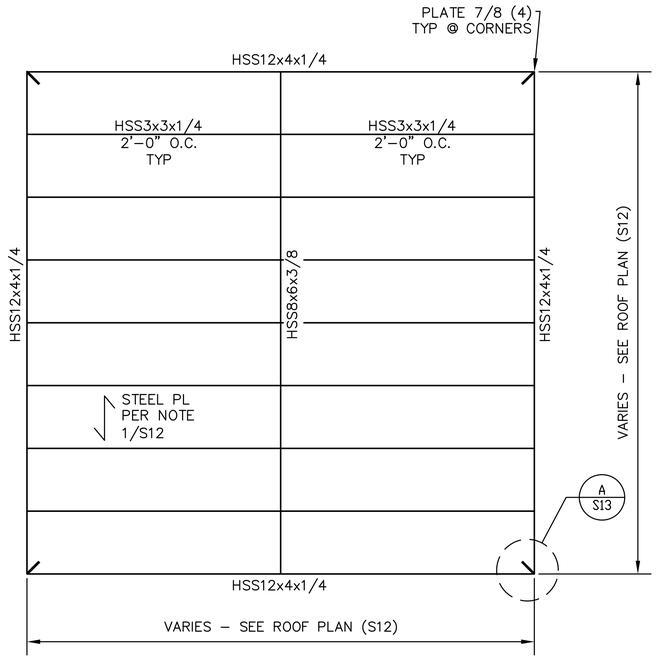

REMOVABLE COVER FRAMING DETAIL

SCALE: N.T.S.

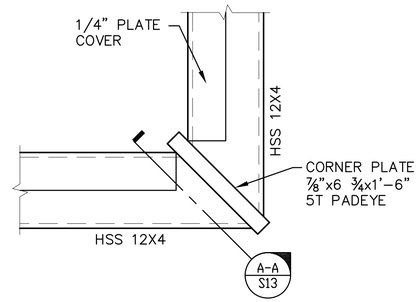

A S13 DETAIL AT HATCH

SCALE: N.T.S.

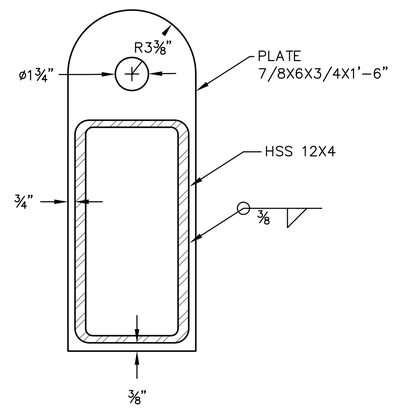

SECTION "A-A"

SCALE: N.T.S.

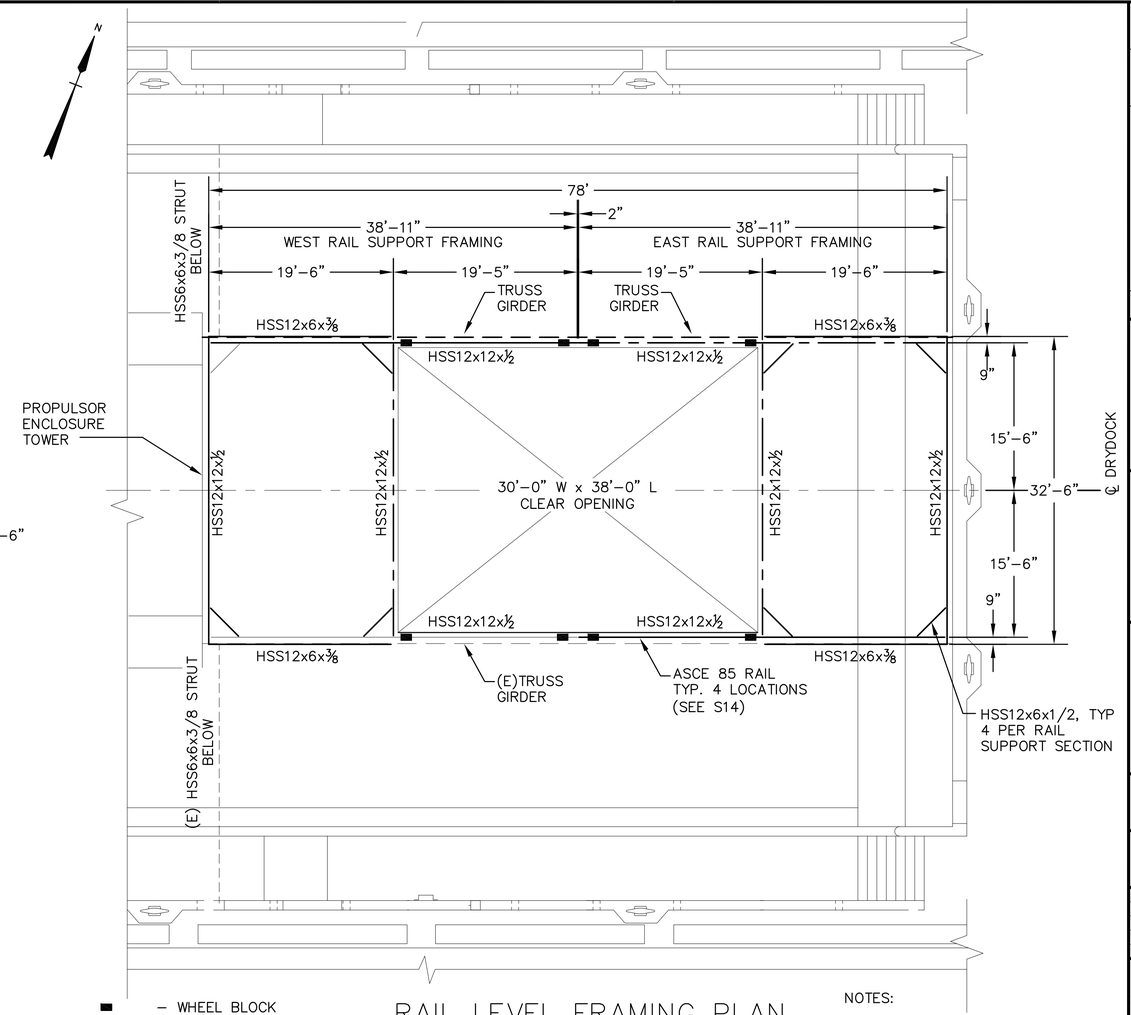

RAIL LEVEL FRAMING PLAN

SCALE: 1/8"=1'-0"

NOTES:

1. SEE S12 FOR ALL SECTIONS

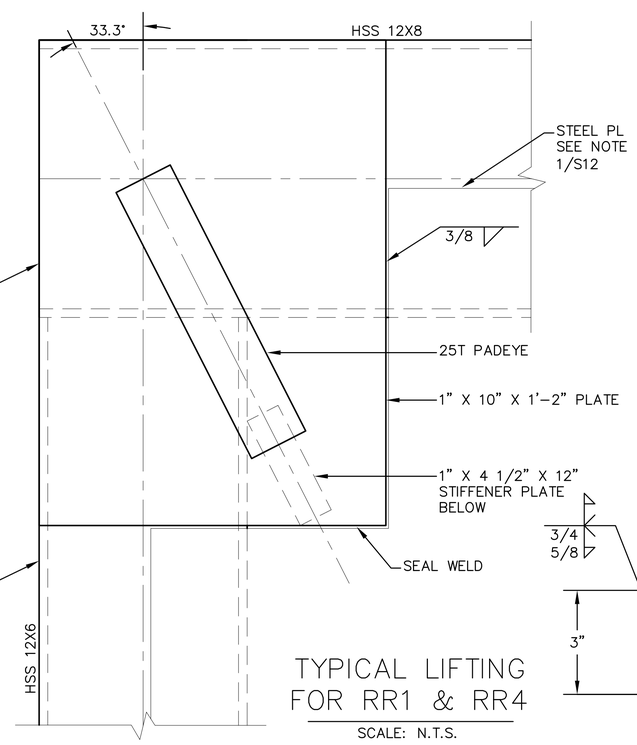

TYPICAL LIFTING FOR RR1 & RR4

SCALE: N.T.S.

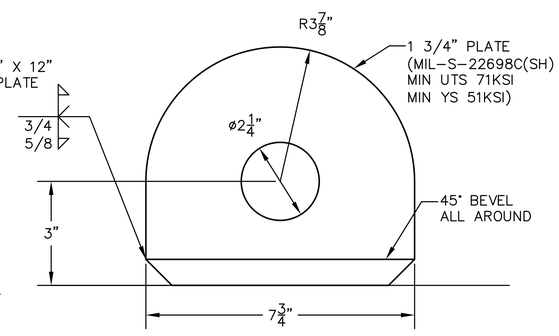

- WHEEL BLOCK (ROOF CLOSED POSITION)

RAIL STOPS REQUIRED AT ALL RAIL ENDS (8 LOCATIONS) COORDINATED WITH WHEEL BLOCK LOCATIONS

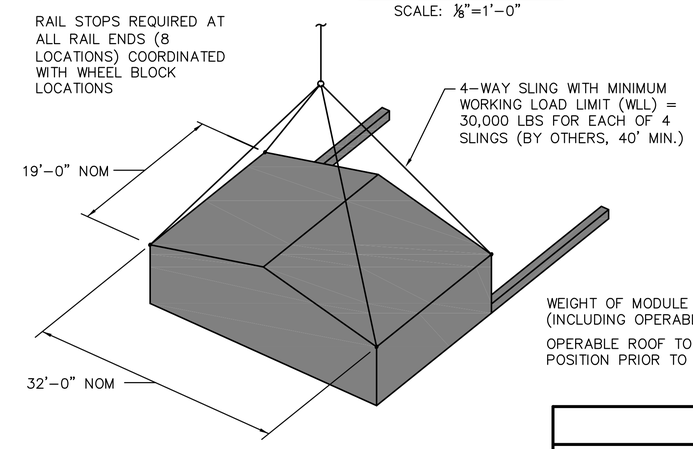

WEIGHT OF MODULE IS APPROX 60,000 LBS (INCLUDING OPERABLE ROOF)

OPERABLE ROOF TO BE SECURED IN OPEN POSITION PRIOR TO LIFTING.

MODULE 5S & 5N LIFTING DIAGRAM

SCALE: 1/8"=1'-0"

GRAPHIC SCALE

1/8" = 1' 8 4 0 8 16 24 scale feet

SYM	DESCRIPTION	DATE	APPR
3	UPDATED FINAL SUBMISSION	01/26/2015	ILB
2	100% FINAL SUBMISSION	12/18/2014	ILB
1	100% PRE-FINAL SUBMISSION	11/20/2014	ILB
0	60% SUBMISSION	07/23/2017	ILB

NAVFAC

PWD-MAINE IN HOUSE DESIGN

APPROVED

FOR COMMANDER NAVFAC

ACTIVITY

SATISFACTORY TO DATE

DES IB DRW PFG CHK NAM

PM/DM IAN BODWELL

BRANCH MANAGER NATHAN MAHER

FEAD/PM&E AMIN BAHROUR PM&E

FIRE PROTECTION X

DEPARTMENT OF THE NAVY
NAVAL FACILITIES ENGINEERING COMMAND
PUBLIC WORKS DEPARTMENT - MAINE
NAVAL FACILITIES ENGINEERING COMMAND ~ MID-ATLANTIC
NAVAL SHIPYARD ~ PORTSMOUTH, NH
PORTSMOUTH NAVAL SHIPYARD KITTERY, MAINE

COMPLETION OF DD #3 PROPULSOR ENCLOSURE

RAIL LEVEL FRAMING PLAN AND DETAILS

EPROJECT NO.: 1340001

CONSTR. CONTR. NO. 15-C-6104

NAVFAC DRAWING NO. 12684648

SHEET 18 OF 28

S13 DD3-14-649

DRAWFORM REVISION: 10 MARCH 2009

FILE NAME: P:\ME\PortsmouthNavalShipyard\Waterfront\2014_1340001_Completion of DD #3 Propulsor Enclosure\B_Design\Drawings\Final\2014_1340001_Completion of DD #3 Propulsor Enclosure 12-18-14.dwg LAYOUT NAME: S13 PLOTTED: Monday, January 26, 2015 - 12:22pm USER: ian.bodwell

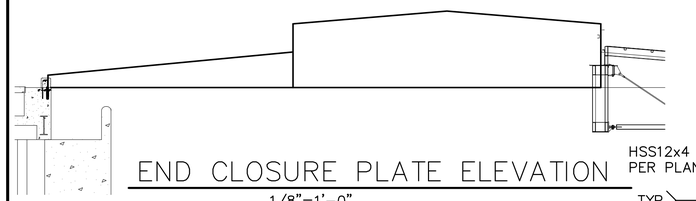

END CLOSURE PLATE ELEVATION
1/8"=1'-0"

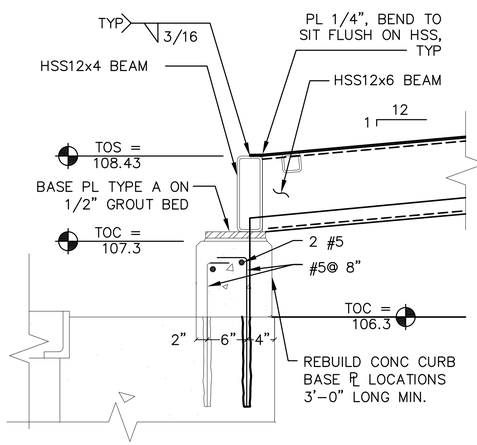

4 S12S14 DETAIL
1"=1'-0"

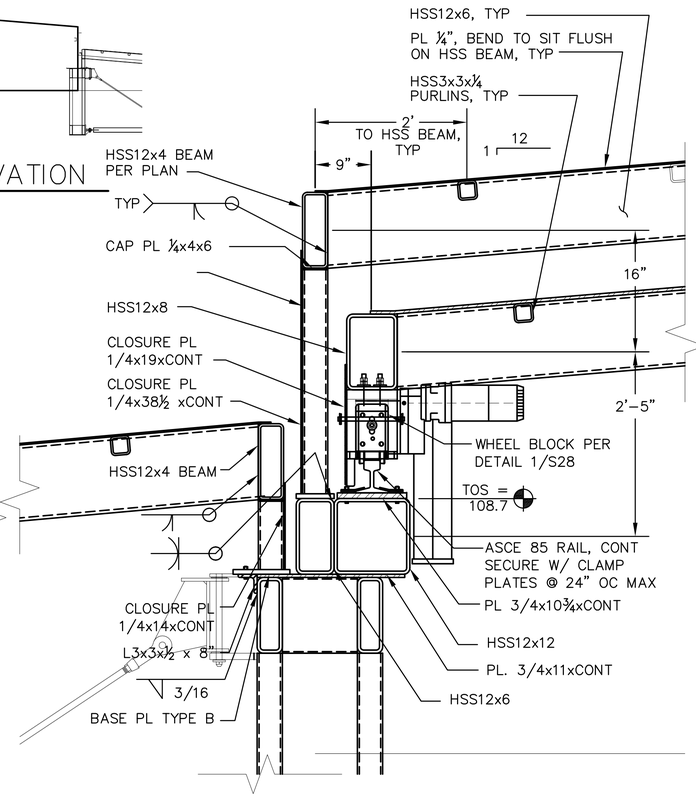

1 S12S14 DETAIL
1"=1'-0"

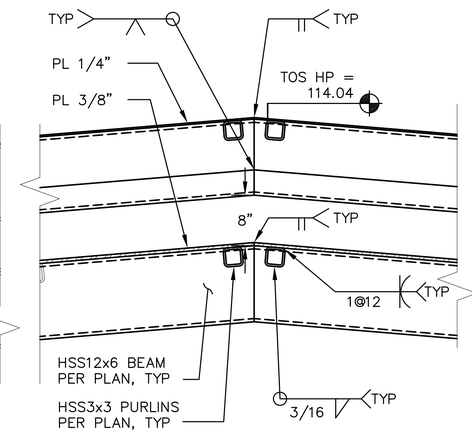

2 S12S14 DETAIL
1"=1'-0"

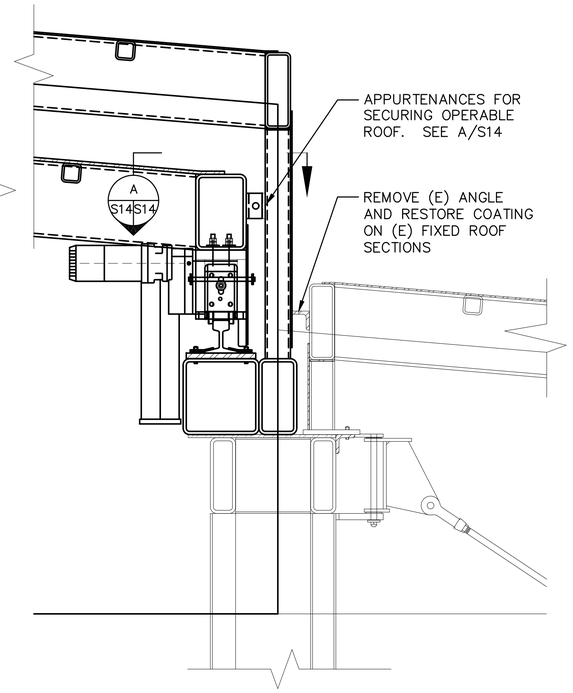

3 S12S14 DETAIL
1"=1'-0"

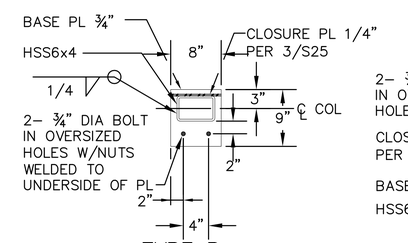

TYPE B

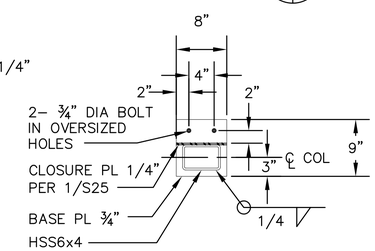

TYPE D

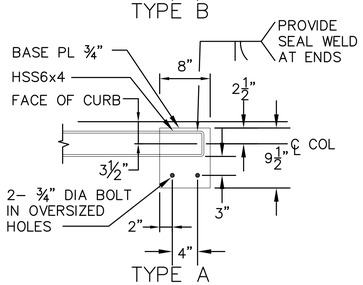

TYPE A

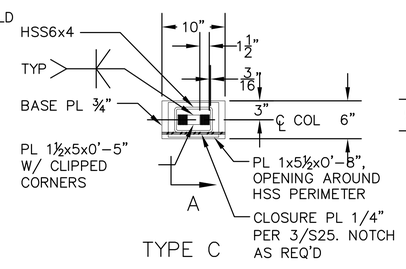

TYPE C

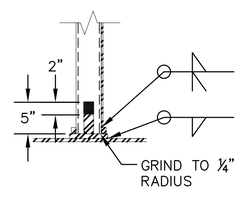

SECTION A

BASE PLATE DETAILS
SCALE: 1"=1'-0"

NOTE: POST-SET ANCHORS FOLLOWING ERECTION FOR CORRECT ALIGNMENT.

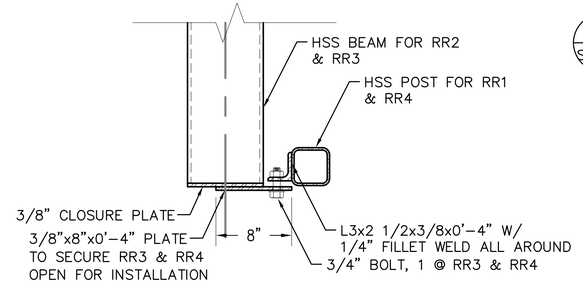

A S14S14 SECTION
1 1/2"=1'-0"

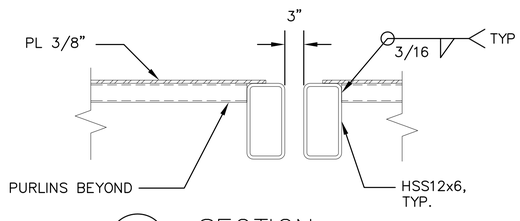

E S12S14 SECTION
1"=1'-0"

GRAPHIC SCALE
1" = 1'
1 .5 0 1 2 3
scale feet

SYM	DESCRIPTION	DATE	APPR
3	UPDATED FINAL SUBMISSION	01/26/2015	ILB
2	100% FINAL SUBMISSION	12/18/2014	ILB
1	100% PRE-FINAL SUBMISSION	11/20/2014	ILB
0	60% SUBMISSION	07/23/2017	ILB

NAVFAC

PWD-MAINE IN HOUSE DESIGN

SEAL

APPROVED

FOR COMMANDER NAVFAC

ACTIVITY

SATISFACTORY TO DATE

DES IB DRW PFG CHK NAM
PM/DM IAN BODWELL
BRANCH MANAGER NATHAN MAHER
FEAD/PM&E AMIN BAHROUR PM&E
FIRE PROTECTION X

DEPARTMENT OF THE NAVY
NAVAL FACILITIES ENGINEERING COMMAND
PUBLIC WORKS DEPARTMENT – MAINE
PORTSMOUTH NAVAL SHIPYARD

NAVAL FACILITIES ENGINEERING COMMAND ~ MID-ATLANTIC
NAVAL SHIPYARD – PORTSMOUTH, NH
KITTERY, MAINE

COMPLETION OF DD #3 PROPULSOR ENCLOSURE

HIGH BAY ROOF SECTIONS AND DETAILS

EPROJECT NO.: 1340001
CONSTR. CONTR. NO. 15-C-6104
NAVFAC DRAWING NO. 12684649
SHEET 19 OF 28
S14 DD3-14-650

DRAWFORM REVISION: 10 MARCH 2009

FILE NAME: P:\MD\PortsmouthNavalShipyard\Waterfront\2014_1340001_Completion of DD #3 Propulsor Enclosure\B_Design\Drawings\Final\2014_1340001_Completion of DD #3 Propulsor Enclosure 12-18-14.dwg LAYOUT NAME: S14 PLOTTED: Monday, January 26, 2015 - 12:23pm USER: ian.bodwell

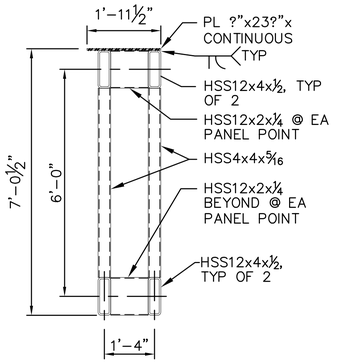

E S12S15 SECTION 1/2"=1'-0"

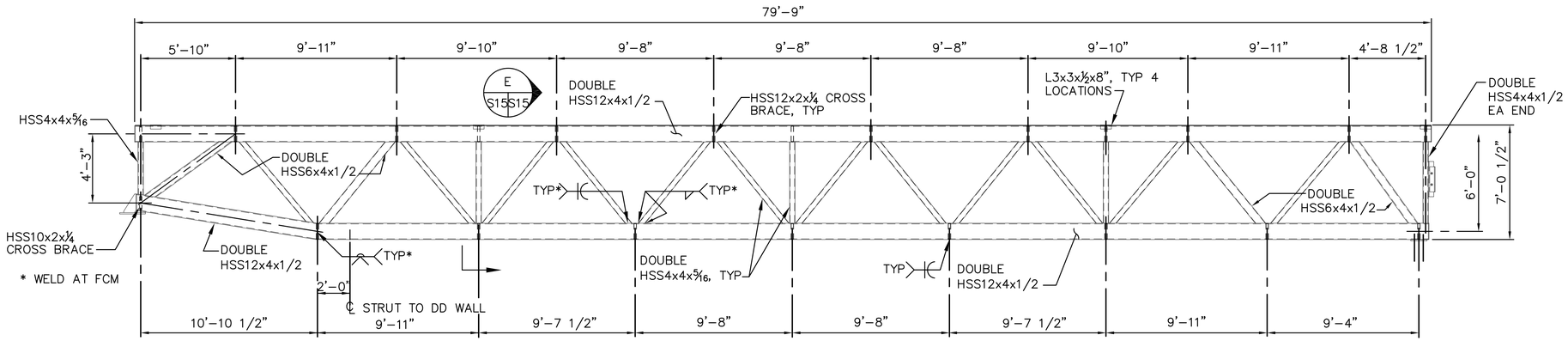

F S12S15 ELEVATION 1/2"=1'-0"

CAMBER TABLE (IN) (REFERENCE BOTTOM CHORD PANEL POINTS IN ELEVATION F)

TRUSS GIRDER DL DEFLECTION	0.008	0.037	0.085	0.119	0.137	0.136	0.117	0.080	0.031
FIXED PANEL DL DEFLECTION	0.011	0.051	0.123	0.174	0.199	0.197	0.169	0.116	0.045
REMOVABLE PANEL DL DEFLECTION	0.004	0.016	0.035	0.048	0.053	0.052	0.046	0.033	0.013
RETRACTABLE PANEL DL DEFLECTION	0.009	0.048	0.118	0.171	0.201	0.199	0.167	0.112	0.042
TOTAL CAMBER	−0.032	−0.152	−0.361	−0.512	−0.590	−0.584	−0.499	−0.341	−0.131

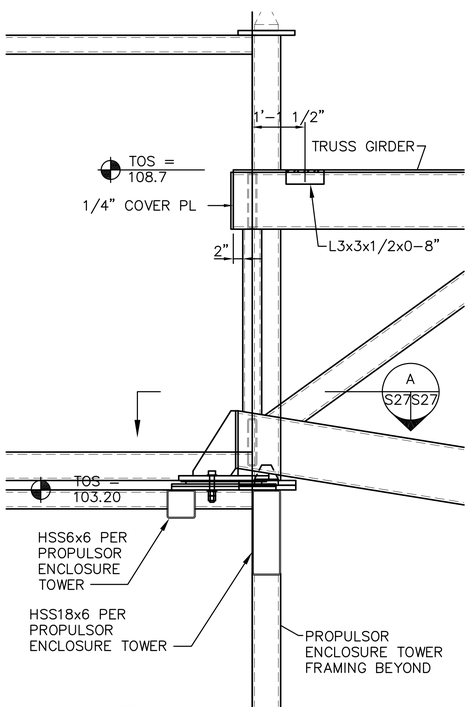

5 S12S15 DETAIL 3/4"=1'-0"

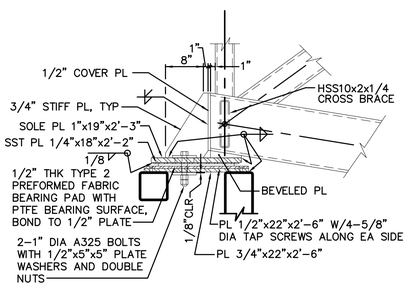

G S15S15 SECTION 3/4"=1'-0"

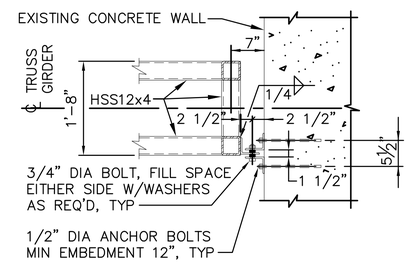

B S15S15 SECTION 3/4"=1'-0"

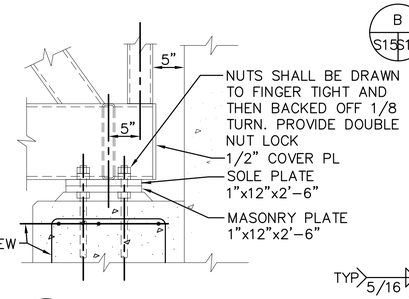

D S15S15 SECTION 1"=1'-0"

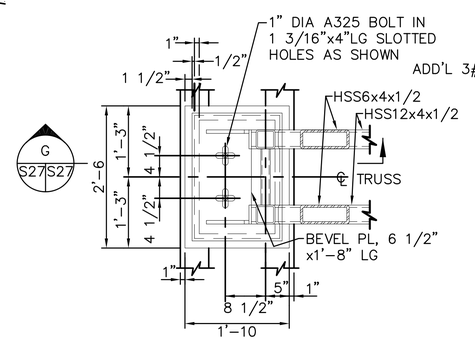

A S15S15 SECTION 3/4"=1'-0"

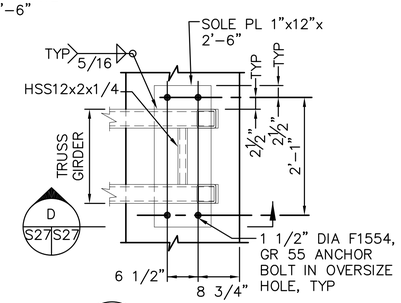

C S15S15 SECTION 3/4"=1'-0"

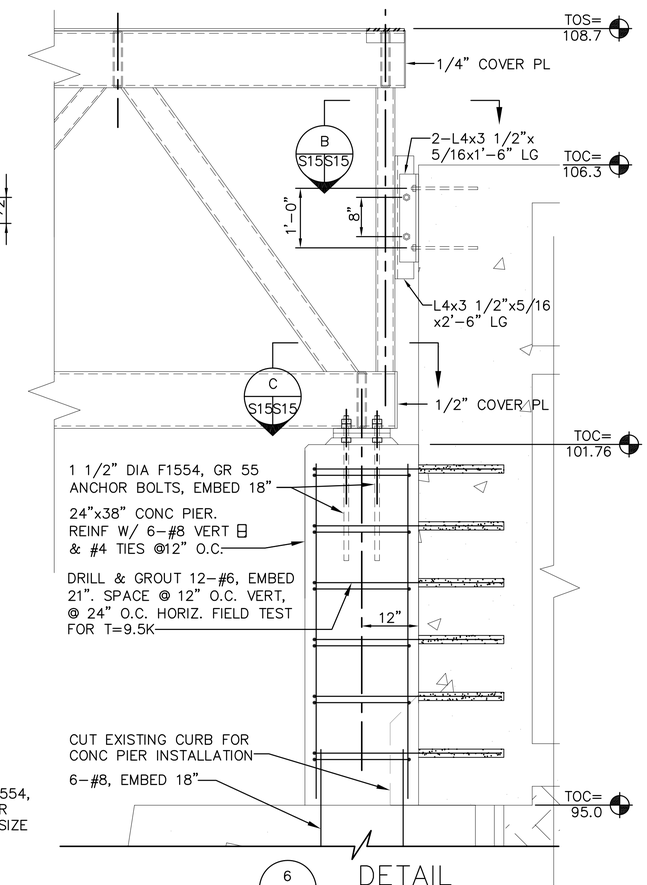

6 S12S15 DETAIL 3/4"=1'-0"

GRAPHIC SCALE

1/2" = 1' scale 2 1 0 2 4 6 feet

3/4" = 1' scale 2 1 6" 0 1 2 3 4 feet

SYM	DESCRIPTION	DATE	APPR
2	100% FINAL SUBMISSION	12/18/2014	ILB
1	100% PRE-FINAL SUBMISSION	11/20/2014	ILB
0	60% SUBMISSION	07/23/2017	ILB

NAVFAC

SEAL

PWD-MAINE IN HOUSE DESIGN

APPROVED

FOR COMMANDER NAVFAC

ACTIVITY

SATISFACTORY TO DATE

DES IB DRW PFG CHK NAM

PM/DM IAN BODWELL

BRANCH MANAGER NATHAN MAHER

FEAD/PM&E AMIN BAHROUR PM&E

FIRE PROTECTION X

DEPARTMENT OF THE NAVY
NAVAL FACILITIES ENGINEERING COMMAND
PUBLIC WORKS DEPARTMENT – MAINE
PORTSMOUTH NAVAL SHIPYARD

NAVAL FACILITIES ENGINEERING COMMAND – MID-ATLANTIC
NAVAL SHIPYARD – PORTSMOUTH, NH
KITTERY, MAINE

COMPLETION OF DD #3 PROPULSOR ENCLOSURE

HIGH BAY ROOF TRUSS ELEVATIONS AND DETAILS

EPROJECT NO.: 1340001

CONSTR. CONTR. NO. 15-C-6104

NAVFAC DRAWING NO. 12684650

SHEET 20 OF 28

S15 DD3-14-651

DRAWFORM REVISION: 10 MARCH 2009

FILE NAME: P:\ME\PortsmouthNavalShipyard\Waterfront\2014_1340001_Completion of DD #3 Propulsor Enclosure\B_Design\Drawings\Final\2014_1340001_Completion of DD #3 Propulsor Enclosure 12-18-14.dwg LAYOUT NAME: S15 PLOTTED: Thursday, December 18, 2014 - 9:44am USER: ian.bodwell

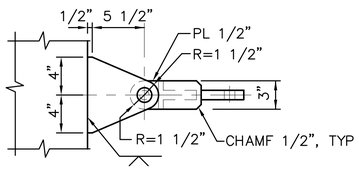

PLAN

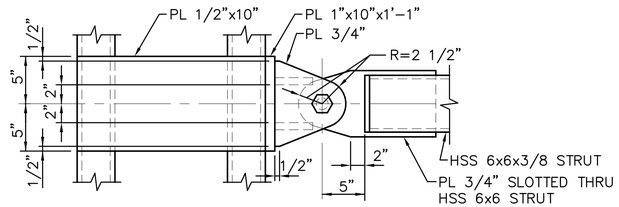

PLAN

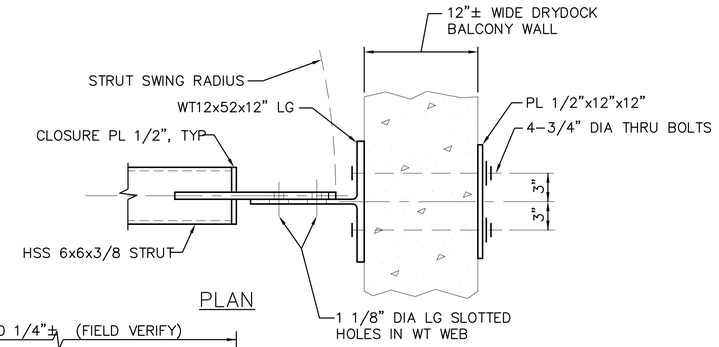

PLAN

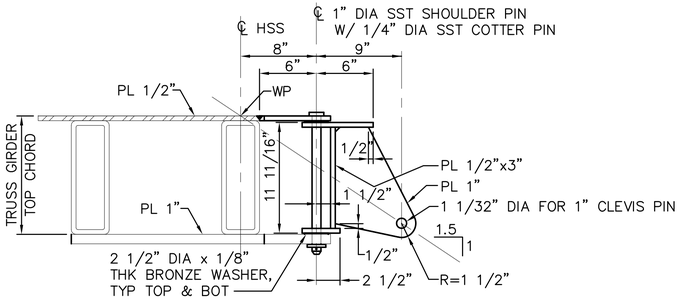

DETAIL – TRUSS STRUT SUPPORT

SCALE: 1 1/2"=1'-0"

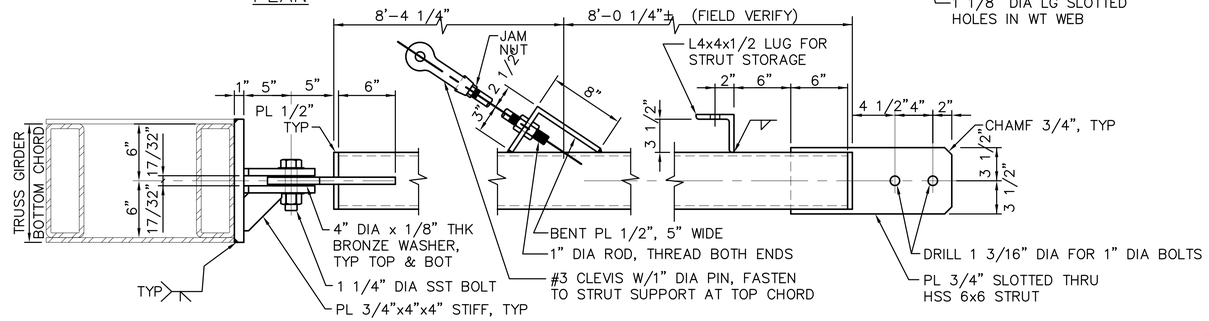

DETAIL – TRUSS STRUT AND CONNECTIONS

SCALE: 1 1/2"=1'-0"

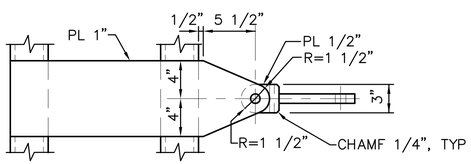

BOTTOM VIEW

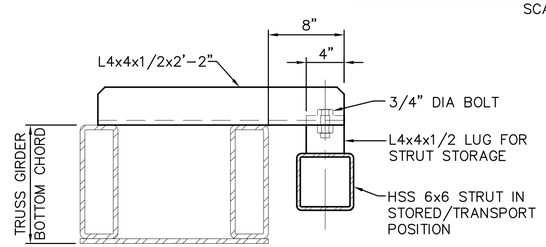

DETAIL – STRUT STORAGE CONNECTION

SCALE: 1 1/2"=1'-0"

FRAMING AT OPENING

SCALE: 1/4"=1'-0"

NOTE:
SEE MECHANICAL DRAWINGS
FOR EXACT LOCATIONS OF
UNITS AND CLEAR OPENING
REQUIREMENTS

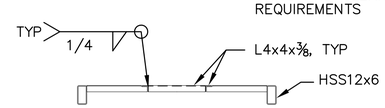

SECTION A–A

PLEASE NOTE:
COORDINATE HATCH OPENINGS AND
FINAL HATCH CONFIGURATION WITH FIXED
ROOF CORNER BRACES AND PADEYES.

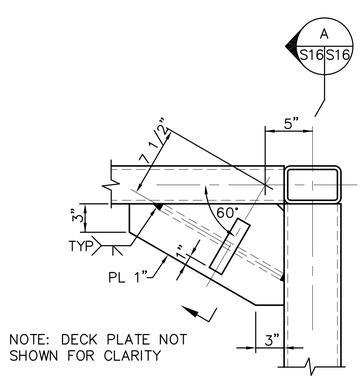

PLAN – TYP. FIXED ROOF LIFT LUG

SCALE: 1 1/2"=1'-0"

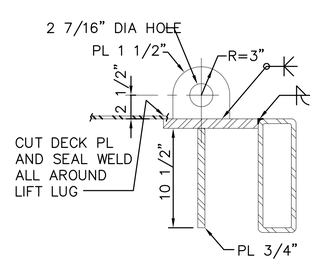

A S16 S16 SECTION

SCALE: 1 1/2"=1'-0"

GRAPHIC SCALE

1/4" = 1' — 4 2 0 4 8 12 — scale — feet

1½" = 1' — 1 6" 3" 0 1 — scale — feet

SYM	DESCRIPTION	DATE	APPR
3	UPDATED FINAL SUBMISSION	01/26/2015	ILB
2	100% FINAL SUBMISSION	12/18/2014	ILB
1	100% PRE-FINAL SUBMISSION	11/20/2014	ILB
0	60% SUBMISSION	07/23/2017	ILB

NAVFAC

SEAL

PWD-MAINE
IN HOUSE DESIGN

APPROVED

FOR COMMANDER NAVFAC

ACTIVITY

SATISFACTORY TO DATE

DES IB DRW PFG CHK NAM

PM/DM IAN BODWELL

BRANCH MANAGER NATHAN MAHER

FEAD/PM&E AMIN BAHROUR PM&E

FIRE PROTECTION X

DEPARTMENT OF THE NAVY
NAVAL FACILITIES ENGINEERING COMMAND
NAVAL FACILITIES ENGINEERING COMMAND ~ MID-ATLANTIC
PUBLIC WORKS DEPARTMENT – MAINE
NAVAL SHIPYARD – PORTSMOUTH, NH
PORTSMOUTH NAVAL SHIPYARD KITTERY, MAINE

COMPLETION OF DD #3
PROPULSOR ENCLOSURE

HIGH BAY ROOF TRUSS SECTIONS AND DETAILS

EPROJECT NO.: 1340001

CONSTR. CONTR. NO. 15-C-6104

NAVFAC DRAWING NO. 12684651

SHEET 21 OF 28

S16 DD3-14-652

DRAWFORM REVISION: 10 MARCH 2009

FILE NAME: P:\ME\PortsmouthNavalShipyard\Waterfront\2014_1340001_Completion of DD #3 Propulsor Enclosure\B_Design\Drawings\Final\2014_1340001_Completion of DD #3 Propulsor Enclosure 12-18-14.dwg LAYOUT NAME: S16 PLOTTED: Monday, January 26, 2015 - 12:24pm USER: ian.bodwell

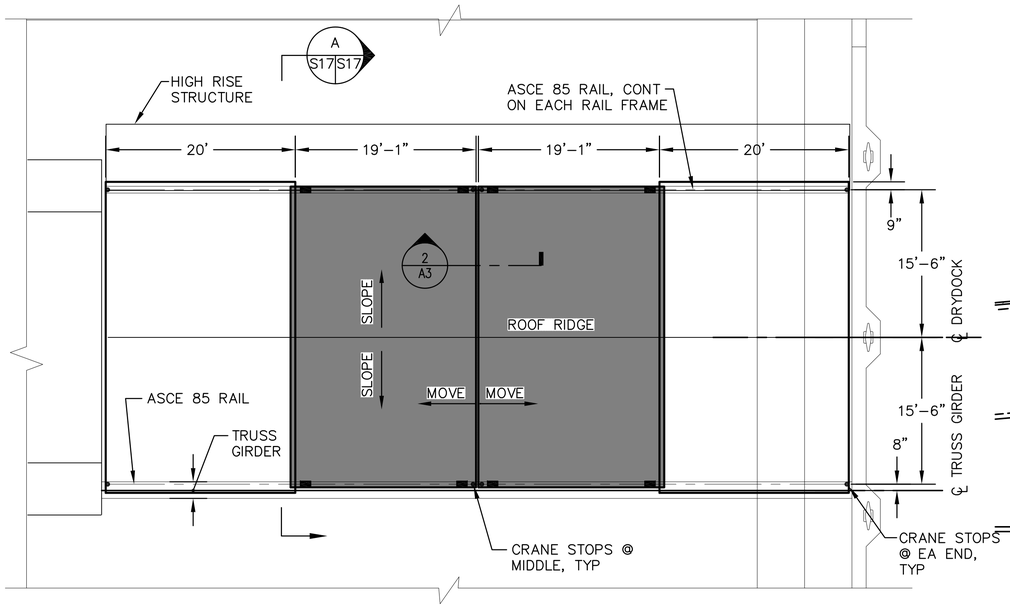

RAIL PLAN
SCALE: ⅛"=1'-0"

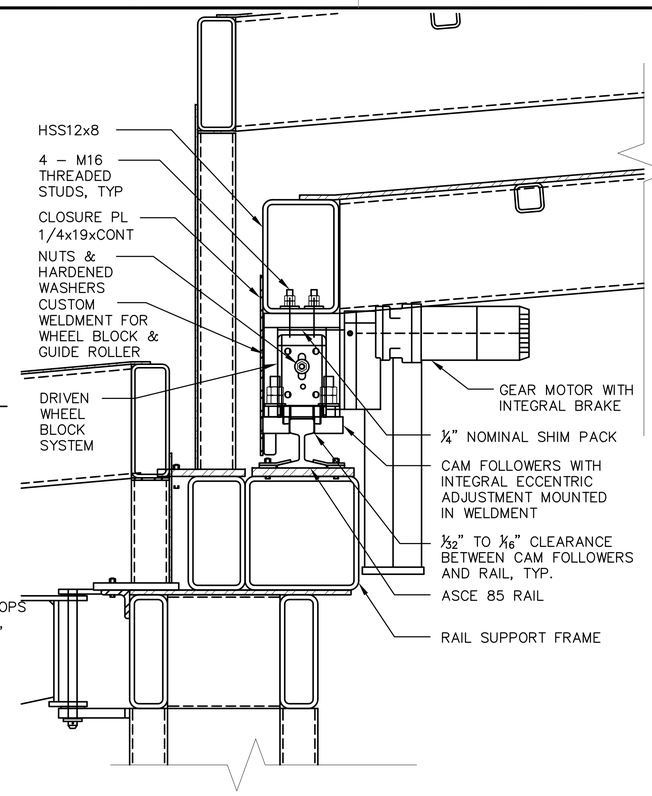

1 S17 S17 DETAIL
1 1/2"=1'-0"

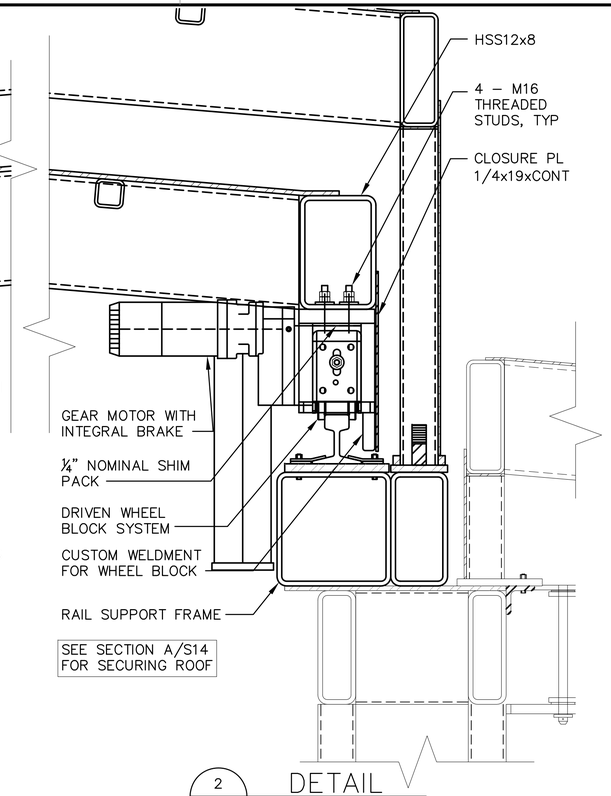

2 S17 S17 DETAIL
1 1/2"=1'-0"

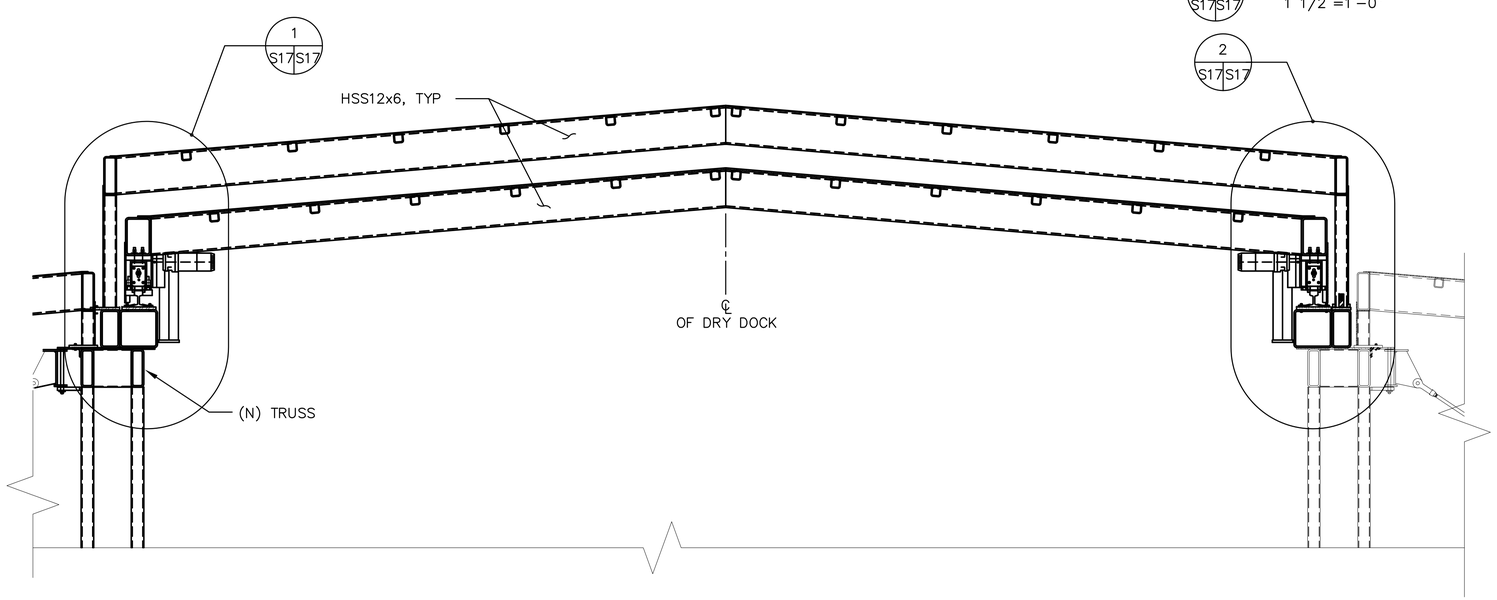

A S17 S17 SECTION
1/2"=1'-0"

SEE SHEET S12 FOR INFORMATION NOT SHOWN ON THIS SHEET

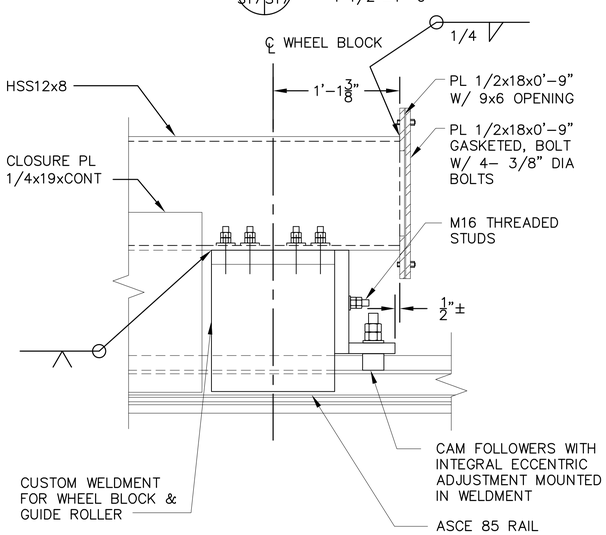

WELDMENT DETAIL
SCALE: 1½"=1'-0"

GRAPHIC SCALE

1/8" = 1' scale: 8 4 0 8 16 24 feet

1/2" = 1' scale: 2 1 0 2 4 6 feet

STM	DESCRIPTION	DATE	APPR
2	100% FINAL SUBMISSION	12/18/2014	ILB
1	100% PRE-FINAL SUBMISSION	11/20/2014	ILB
0	60% SUBMISSION	07/23/2017	ILB

NAVFAC

SEAL

PWD-MAINE IN HOUSE DESIGN

APPROVED

FOR COMMANDER NAVFAC

ACTIVITY

SATISFACTORY TO DATE

DES IB DRW PFG CHK NAM

PM/DM IAN BODWELL

BRANCH MANAGER NATHAN MAHER

FEAD/PM&E AMIN BAHROUR PM&E

FIRE PROTECTION X

DEPARTMENT OF THE NAVY
NAVAL FACILITIES ENGINEERING COMMAND
PUBLIC WORKS DEPARTMENT – MAINE
PORTSMOUTH NAVAL SHIPYARD

NAVAL FACILITIES ENGINEERING COMMAND ~ MID-ATLANTIC
NAVAL SHIPYARD – PORTSMOUTH, NH
KITTERY, MAINE

COMPLETION OF DD #3 PROPULSOR ENCLOSURE

RETRACTABLE ROOF SYSTEM

EPROJECT NO.: 1340001

CONSTR. CONTR. NO. 15-C-6104

NAVFAC DRAWING NO. 12684652

SHEET 22 OF 28

S17 DD3-14-653

DRAWFORM REVISION: 10 MARCH 2009

FILE NAME: P:\ME\PortsmouthNavalShipyard\Waterfront\2014_1340001_Completion of DD #3 Propulsor Enclosure\B_Design\Drawings\Final\2014_1340001_Completion of DD #3 Propulsor Enclosure 12-18-14.dwg LAYOUT NAME: S17 PLOTTED: Thursday, December 18, 2014 – 9:58am USER: ian.bodwell

ELECTRICAL LEGEND:

CONDUIT AND WIRE:

P2N–1,3 — HOMERUN TO PANELBOARD "P2N", CIRCUIT NUMBERS 1,3 (VIA 20A–1P CB'S UNLESS OTHERWISE NOTED). DIAGONAL LINES INDICATE NUMBER OF #12 AWG CONDUCTORS (PHASE, NEUTRAL AND GROUND). NO DIAGONAL LINES INDICATE 2#12 & 1#12 GND., 3/4"C. UNLESS OTHERWISE NOTED.

RACEWAY RUNNING EXPOSED (FOR SURFACE APPLICATIONS) OR RUNNING CONCEALED (FOR RECESSED APPLICATIONS). CONDUIT TO RUN PARALLEL TO STRUCTURAL ELEMENTS FOR SURFACE APPLICATIONS.

CONDUIT UP.

CONDUIT DOWN.

FLEXIBLE RACEWAY.

MISCELLANEOUS:

MOTOR.

NON–FUSED DISCONNECT SWITCH, 600 VOLT, 3 POLE, 30 AMP, UNLESS OTHERWISE NOTED.

FUSED DISCONNECT SWITCH, 600 VOLT, 3 POLE, 30 AMP, UNLESS OTHERWISE NOTED.

MOTOR STARTER.

J — JUNCTION BOX.

SURFACE MOUNTED PANELBOARD, 6'–6" AFF TO TOP.

S_T — MANUAL MOTOR STARTER WITH THERMAL OVERLOAD PROTECTION.

125V RECEPTACLE. AMPERAGE AND TYPE AS INDICATED ON PLANS. "WP" DENOTES WEATHERPROOF COVER.

120/208V RECEPTACLE. AMPERAGE AND TYPE AS INDICATED ON PLANS.

PORTABLE CORD WITH PLUG. AMPERAGE AND TYPE AS INDICATED ON PLANS.

PORTABLE CORD WITH CONNECTOR. AMPERAGE AND TYPE AS INDICATED ON PLANS.

GROUND.

T — TRANSFORMER.

CP — CONTROL PANEL.

CLS — PROTECTIVE RAIL COVER LIMIT SWITCH.

LS — END OF TRAVEL LIMIT SWITCH.

ABBREVIATIONS:

A (AMP)	AMPERES
AFF	ABOVE FINISHED FLOOR
AFG	ABOVE FINISHED GRADE
AWG	AMERICAN WIRE GAUGE
C	CONDUIT
CB	CIRCUIT BREAKER
CU	COPPER
GFCI	GROUND FAULT CIRCUIT INTERRUPTOR
GND	GROUND
KVA	KILOVOLT AMPERES
LTG	LIGHTING
NEC	NATIONAL ELECTRICAL CODE
P	POLE
PVC	POLYVINYL CHLORIDE
RGS	RIGID GALVANIZED STEEL
SCH	SCHEDULE
V	VOLTS
W	WATTS
WP	WEATHERPROOF

GENERAL NOTES:

1. ALL ELECTRICAL WORK SHALL BE FURNISHED AND INSTALLED PER PORTSMOUTH NAVAL SHIPYARD ELECTRICAL GUIDELINES AND STANDARDS.
2. ALL WIRING WITHIN THE STRUCTURES SHALL BE THWN/THHN.
3. CONDUIT AND WIRE SHALL BE USED FOR ALL CONCEALED AND SURFACE MOUNTED APPLICATIONS.
4. THE CONTRACTOR SHALL INSTALL ALL WIRING AND EQUIPMENT IN ACCORDANCE TO THE NATIONAL ELECTRIC CODE. EQUIPMENT LOCATIONS AS SHOWN ON THE PLANS SHALL BE COORDINATED WITH OTHER TRADES. IT IS THE CONTRACTORS RESPONSIBILITY TO ROUTE ALL WIRING TO THE DEVICES AND EQUIPMENT SHOWN ON THE PLANS AND TO PROVIDE ALL NECESSARY WIRING, RACEWAY, AND PULL BOXES TO MAKE A COMPLETE AND OPERATIONAL SYSTEM.
5. WIRING DEVICES AND ELECTRICAL EQUIPMENT WHICH OCCUR AT DIFFERENT WALL ELEVATIONS SHALL BE LINED UP VERTICALLY.
6. ALL 120 VOLT, GENERAL PURPOSE RECEPTACLE CIRCUITS, LIGHTING CIRCUITS AND SMALL APPLIANCE CIRCUITS SHALL BE #12 AWG COPPER MINIMUM UNLESS OTHERWISE NOTED.
7. A GROUND CONDUCTOR SHALL BE PROVIDED IN EACH ELECTRICAL RACEWAY IN ACCORDANCE WITH THE NATIONAL ELECTRICAL CODE.
8. THE CONTRACTOR SHALL COORDINATE ALL ELECTRIC WORK, CONDUIT, AND WIRE ROUTING WITH HVAC EQUIPMENT, DUCTWORK, PLUMBING, AND STRUCTURAL ELEMENTS.
9. ALL EQUIPMENT SHALL BE BONDED BY MEANS ACCEPTACLE TO NEC 2005 OR LATER.
10. ALL CONDUIT INSTALLED IN THE STRUCTURES SHALL BE RIGID GALVANIZED STEEL.
11. PROVIDE STAINLESS STEEL STRUT OR STAINLESS STEEL STUD BOLTS TO SUPPORT ALL ELECTRICAL EQUIPMENT, DEVICES, CONDUIT AND RELATED COMPONENTS INSTALLED ON STRUCTURES. ALL SUPPORTS TO BE WELDED TO STRUCTURES. THE STRUCTURES CAN NOT BE PENETRATED FOR ATTACHMENT OF EQUIPMENT. PROVIDE SHOP DRAWINGS OF ALL MOUNTING ASSEMBLIES.
12. COORDINATE WITH CONTRACTING OFFICER FOR CONNECTOR TYPES TO COMPLY WITH SHIPYARD STANDARDS.
13. 480V POWER SHALL BE COORDINATED WITH SHIPYARD PHASE COLOR SCHEME.
    PHASE A – BLACK
    PHASE B – BLUE
    PHASE C – RED

SYM	DESCRIPTION	DATE	APPR
2	100% FINAL SUBMISSION	12/18/2014	ILB
1	100% PRE–FINAL SUBMISSION	11/20/2014	ILB
0	60% SUBMISSION	07/23/2017	ILB

NAVFAC

SEAL

PWD-MAINE IN HOUSE DESIGN

APPROVED

FOR COMMANDER NAVFAC

ACTIVITY

SATISFACTORY TO DATE

DES IB DRW PFG CHK NAM

PM/DM IAN BODWELL

BRANCH MANAGER NATHAN MAHER

FEAD/PM&E AMIN BAHROUR PM&E

FIRE PROTECTION X

DEPARTMENT OF THE NAVY
NAVAL FACILITIES ENGINEERING COMMAND
PUBLIC WORKS DEPARTMENT – MAINE
PORTSMOUTH NAVAL SHIPYARD

NAVAL FACILITIES ENGINEERING COMMAND ~ MID-ATLANTIC
NAVAL SHIPYARD ~ PORTSMOUTH, NH
KITTERY, MAINE

COMPLETION OF DD #3
PROPULSOR ENCLOSURE

ELECTRICAL LEGEND, ABBREVIATIONS AND NOTES

EPROJECT NO.: 1340001

CONSTR. CONTR. NO. 15–C–6104

NAVFAC DRAWING NO. 12684654

SHEET 24 OF 28

E1 DD3-14-655

DRAWFORM REVISION: 10 MARCH 2009

FILE NAME: P:\ME\PortsmouthNavalShipyard\Waterfront\2014_1340001_Completion of DD #3 Propulsor Enclosure\B_Design\Drawings\Final\2014_1340001_Completion of DD #3 Propulsor Enclosure 12-18-14.dwg LAYOUT NAME: E1 PLOTTED: Thursday, December 18, 2014 – 10:06am USER: ian.bodwell

KEYNOTES:

1. CONDUIT ROUTING BETWEEN POWER OUTLETS SHALL BE DISCONNECTED AND REROUTED TO SUPPORT PAD EYE INSTALL. REFER TO ELEVATION DETAIL FOR ADDITIONAL INFORMATION.

ELECTRICAL NOTES:

1. REFER TO DRAWING E1 FOR ELECTRICAL LEGEND, GENERAL NOTES AND ABBREVIATIONS.
2. REFER TO DRAWING E4 FOR PROPULSOR ENCLOSURE POWER RISER DIAGRAMS.
3. THE STRUCTURE CAN NOT BE PENETRATED FOR ATTACHMENT OF EQUIPMENT AND DEVICES. ALL ELECTRICAL EQUIPMENT, DEVICES AND CONDUIT TO BE SUPPORTED FROM STAINLESS STEEL STRUT OR STAINLESS STEEL STUB BOLTS WELDED TO STRUCTURE.
4. ALL ELECTRICAL INFRASTRUCTURE IS EXISTING TO REMAIN UNLESS OTHERWISE INDICATED.

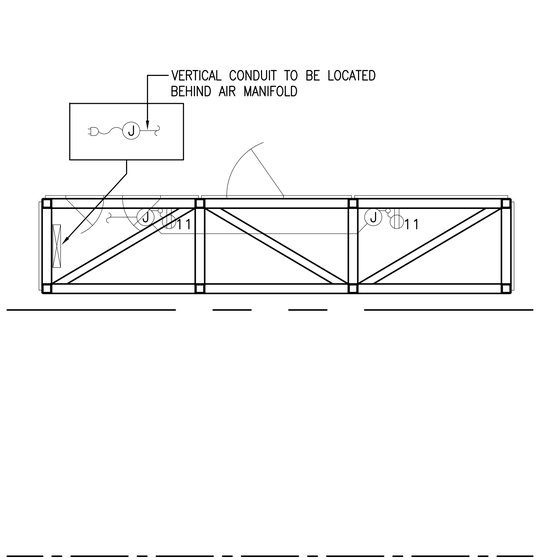

PROPULSOR ENCLOSURE
ELEVATION 63.32 – POWER PLAN
SCALE: 1/4" = 1'–0"

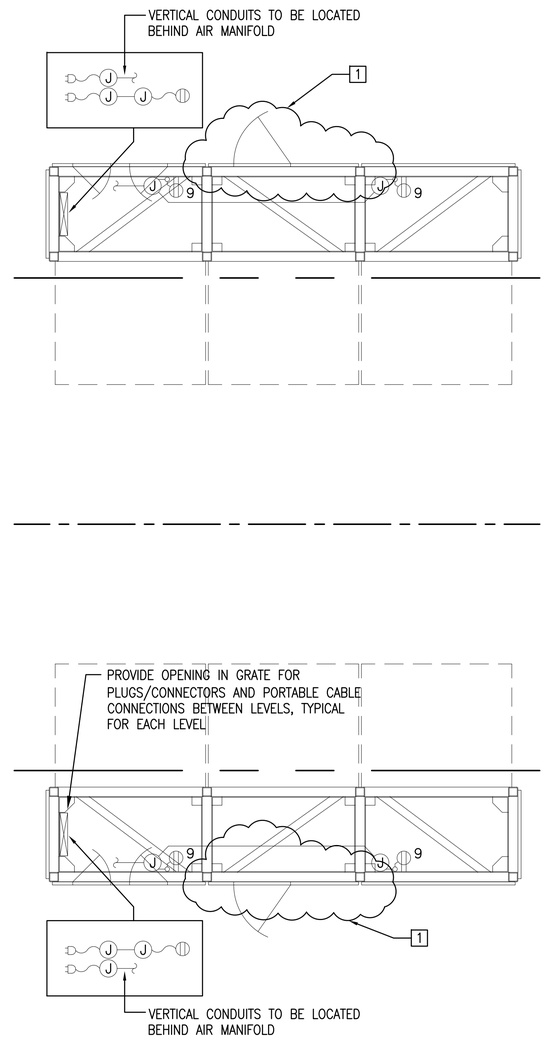

PROPULSOR ENCLOSURE
ELEVATION 71.32 – POWER PLAN
SCALE: 1/4" = 1'–0"

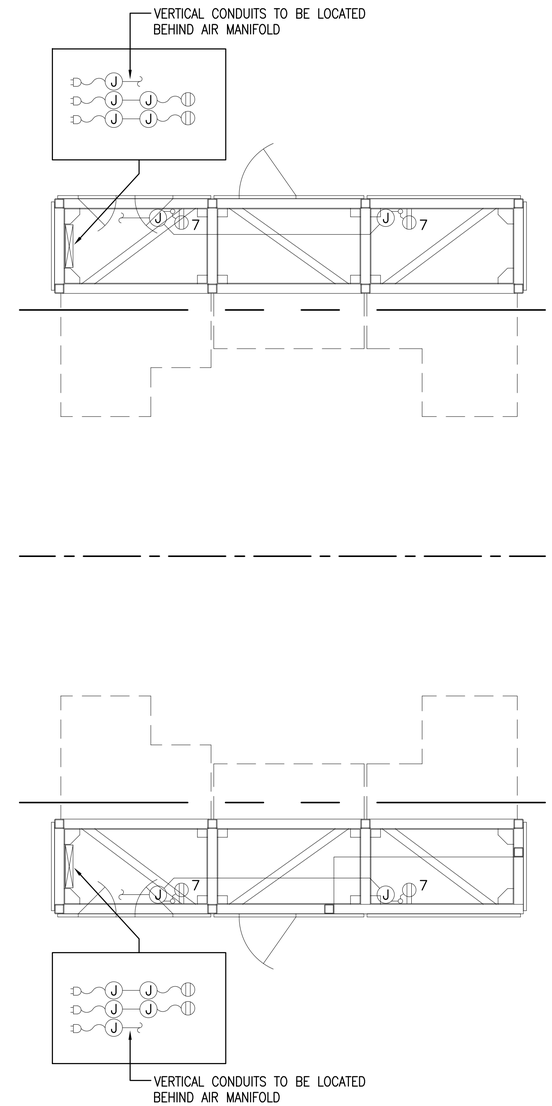

PROPULSOR ENCLOSURE
ELEVATION 79.32 – POWER PLAN
SCALE: 1/4" = 1'–0"

GRAPHIC SCALE

1/4" = 1' 4 2 0 4 8 12 scale feet

SYM	DESCRIPTION	DATE	APPR
2	100% FINAL SUBMISSION	12/18/2014	ILB
1	100% PRE-FINAL SUBMISSION	11/20/2014	ILB
0	60% SUBMISSION	07/23/2017	ILB

NAVFAC

SEAL

PWD-MAINE IN HOUSE DESIGN

APPROVED

FOR COMMANDER NAVFAC

ACTIVITY

SATISFACTORY TO DATE

DES IB DRW PFG CHK NAM

PM/DM IAN BODWELL

BRANCH MANAGER NATHAN MAHER

FEAD/PM&E AMIN BAHROUR PM&E

FIRE PROTECTION X

DEPARTMENT OF THE NAVY
NAVAL FACILITIES ENGINEERING COMMAND
PUBLIC WORKS DEPARTMENT – MAINE
PORTSMOUTH NAVAL SHIPYARD

NAVAL FACILITIES ENGINEERING COMMAND – MID-ATLANTIC
NAVAL SHIPYARD – PORTSMOUTH, NH
KITTERY, MAINE

COMPLETION OF DD #3
PROPULSOR ENCLOSURE

PROPULSOR ENCLOSURE POWER PLANT PLANS PART 1

EPROJECT NO.: 1340001

CONSTR. CONTR. NO. 15-C-6104

NAVFAC DRAWING NO. 12684655

SHEET 25 OF 28

E2 DD3-14-656

DRAWFORM REVISION: 10 MARCH 2009

FILE NAME: P:\WE\Portsmouth\NavalShipyard\Waterfront\2014_1340001_Completion of DD #3 Propulsor Enclosure\B_Design\Drawings\Final\2014_1340001_Completion of DD #3 Propulsor Enclosure 12-18-14.dwg LAYOUT NAME: E2 PLOTTED: Thursday, December 18, 2014 - 10:09am USER: ian.bodwell

KEYNOTES:

1. CONDUIT ROUTING BETWEEN POWER OUTLETS SHALL BE DISCONNECTED AND REROUTED TO SUPPORT PAD EYE INSTALL. REFER TO ELEVATION DETAIL FOR ADDITIONAL INFORMATION.

ELECTRICAL NOTES:

1. REFER TO DRAWING E1 FOR ELECTRICAL LEGEND, GENERAL NOTES AND ABBREVIATIONS.
2. REFER TO DRAWING E4 FOR PROPULSOR ENCLOSURE POWER RISER DIAGRAMS.
3. THE STRUCTURE CAN NOT BE PENETRATED FOR ATTACHMENT OF EQUIPMENT AND DEVICES. ALL ELECTRICAL EQUIPMENT, DEVICES AND CONDUIT TO BE SUPPORTED FROM STAINLESS STEEL STRUT OR STAINLESS STEEL STUB BOLTS WELDED TO STRUCTURE.
4. ALL ELECTRICAL INFRASTRUCTURE IS EXISTING TO REMAIN UNLESS OTHERWISE INDICATED.

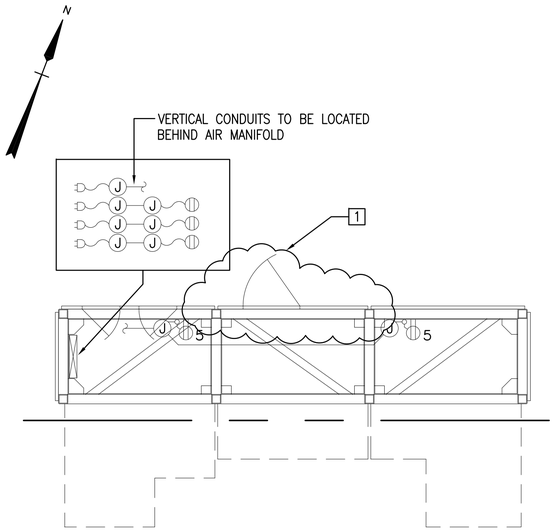

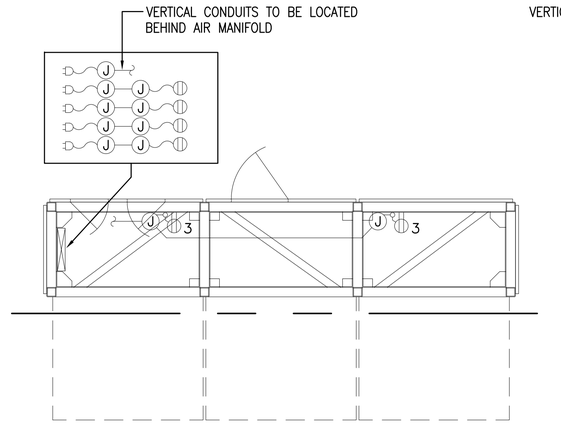

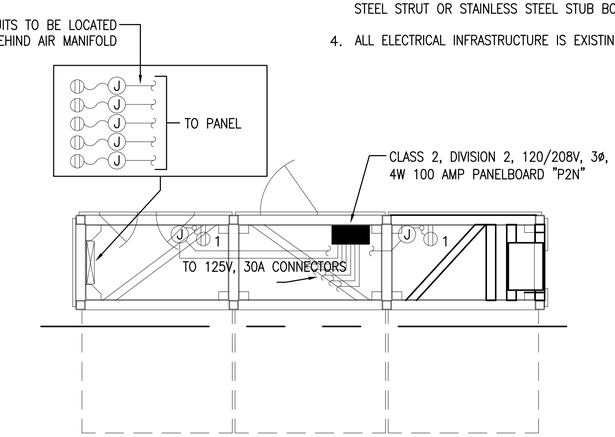

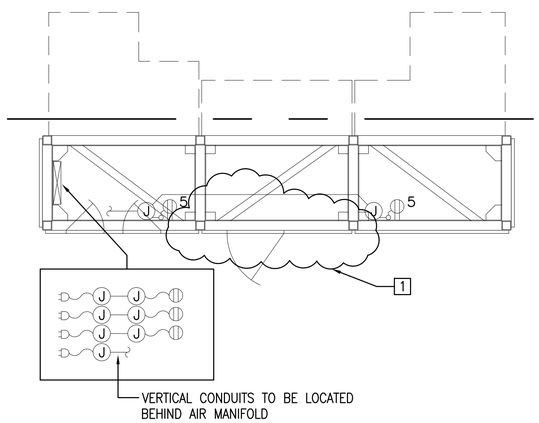

PROPULSOR ENCLOSURE
ELEVATION 87.32 – POWER PLAN
SCALE: 1/4" = 1'-0"

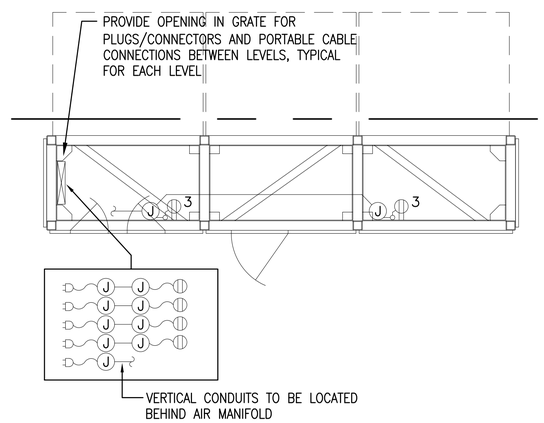

PROPULSOR ENCLOSURE
ELEVATION 95.32 – POWER PLAN
SCALE: 1/4" = 1'-0"

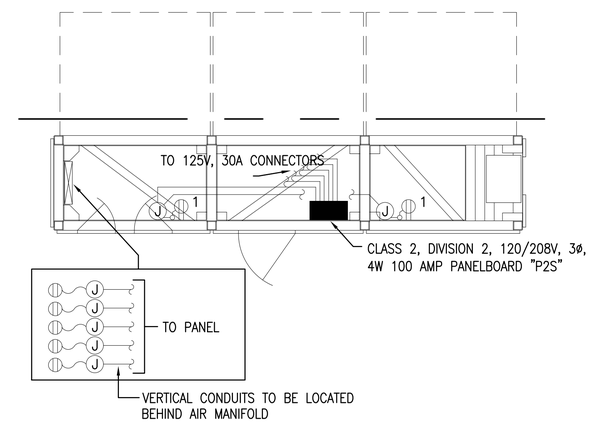

PROPULSOR ENCLOSURE
ELEVATION 103.32 – POWER PLAN
SCALE: 1/4" = 1'-0"

GRAPHIC SCALE

1/4" = 1' 4 2 0 4 8 12
scale feet

SYM	DESCRIPTION	DATE	APPR
2	100% FINAL SUBMISSION	12/18/2014	ILB
1	100% PRE-FINAL SUBMISSION	11/20/2014	ILB
0	60% SUBMISSION	07/23/2017	ILB

NAVFAC

SEAL

PWD-MAINE
IN HOUSE DESIGN

APPROVED

FOR COMMANDER NAVFAC

ACTIVITY

SATISFACTORY TO DATE

DES IB DRW PFG CHK NAM
PM/DM IAN BODWELL
BRANCH MANAGER NATHAN MAHER
FEAD/PM&E AMIN BAHROUR PM&E
FIRE PROTECTION X

DEPARTMENT OF THE NAVY
NAVAL FACILITIES ENGINEERING COMMAND
PUBLIC WORKS DEPARTMENT – MAINE
PORTSMOUTH NAVAL SHIPYARD

NAVAL FACILITIES ENGINEERING COMMAND – MID-ATLANTIC
NAVAL SHIPYARD – PORTSMOUTH, NH
KITTERY, MAINE

COMPLETION OF DD #3
PROPULSOR ENCLOSURE

PROPULSOR ENCLOSURE POWER PART PLANS PART 2

EPROJECT NO.: 1340001
CONSTR. CONTR. NO. 15-C-6104
NAVFAC DRAWING NO. 12684656
SHEET 26 OF 28
E3 DD3-14-657

DRAWFORM REVISION: 10 MARCH 2009

FILE NAME: P:\WE\Portsmouth\NavalShipyard\Waterfront\2014_1340001_Completion of DD #3 Propulsor Enclosure\B_Design\Drawings\Final\2014_1340001_Completion of DD #3 Propulsor Enclosure 12-18-14.dwg LAYOUT NAME: E3 PLOTTED: Thursday, December 18, 2014 - 10:12am USER: ian.bodwell

ELECTRICAL NOTES:

1. REFER TO DRAWING E1 FOR ELECTRICAL LEGEND, GENERAL NOTES AND ABBREVIATIONS.
2. REFER TO DRAWINGS E2 AND E3 FOR PROPULSOR ENCLOSURE POWER PLANS.
3. PROVIDE RIGID GALVANIZED CONDUIT AND CAST METAL BOXES FOR ALL DEVICES LOCATED ON PROPULSOR ENCLOSURE. CLASS 2, DIVISION 2 DEVICES ARE USED BUT THE AREA IS NOT A CLASS 2, DIVISION 2 AREA SINCE THE ENVIRONMENT WILL BE VENTILATED. SEAL FITTINGS ARE NOT REQUIRED ON CONDUITS. ALL BOXES AND FITTINGS TO BE RATED FOR CLASS 2, DIVISION 2 (DUSTTIGHT/DUST-IGNITIONPROOF) ENVIRONMENT.

KEYNOTES:

1. CONDUIT ROUTING BETWEEN POWER OUTLETS SHALL BE DISCONNECTED AND REROUTED TO SUPPORT PAD EYE INSTALL. REFER TO ELEVATION DETAIL FOR ADDITIONAL INFORMATION.

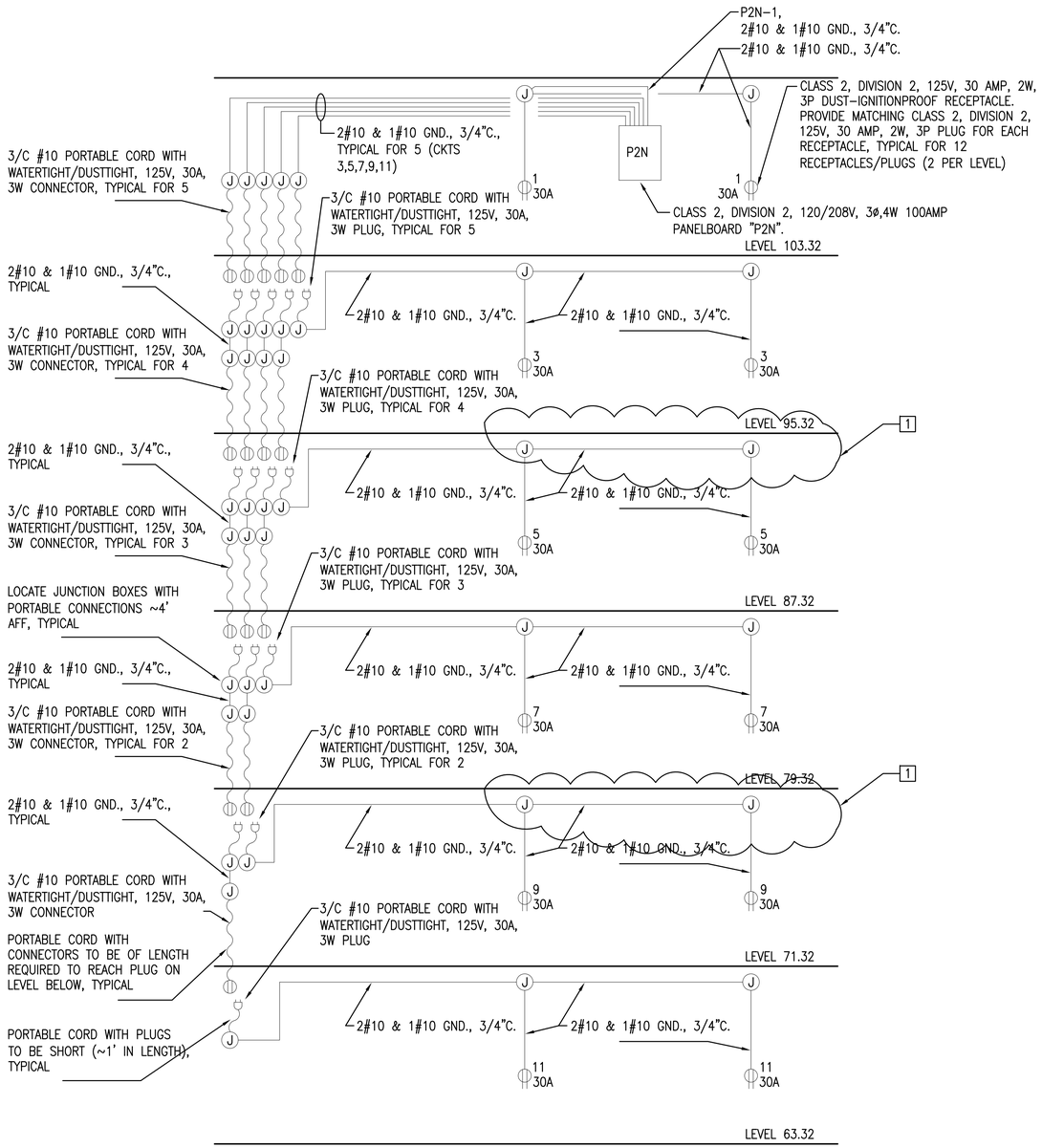

PROPULSOR ENCLOSURE – NORTH SIDE
POWER RISER DIAGRAM
SCALE: NONE

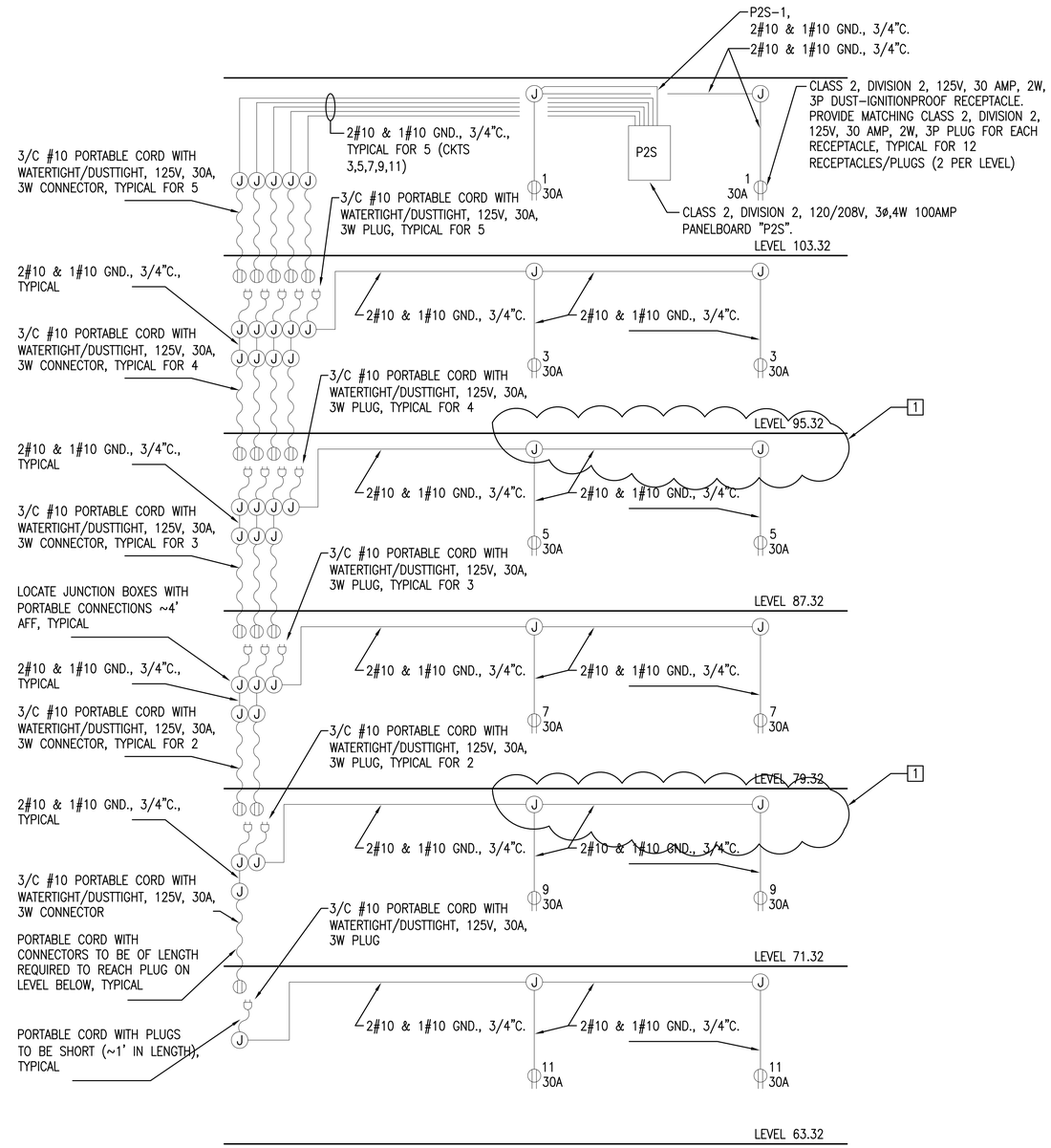

PROPULSOR ENCLOSURE – SOUTH SIDE
POWER RISER DIAGRAM
SCALE: NONE

SYM	DESCRIPTION	DATE	APPR
2	100% FINAL SUBMISSION	12/18/2014	ILB
1	100% PRE-FINAL SUBMISSION	11/20/2014	ILB
0	60% SUBMISSION	07/23/2017	ILB

NAVFAC

SEAL

PWD-MAINE
IN HOUSE DESIGN

APPROVED
FOR COMMANDER NAVFAC
ACTIVITY
SATISFACTORY TO DATE

DES IB DRW PFG CHK NAM
PM/DM IAN BODWELL
BRANCH MANAGER NATHAN MAHER
FEAD/PM&E AMIN BAHROUR PM&E
FIRE PROTECTION X

DEPARTMENT OF THE NAVY
NAVAL FACILITIES ENGINEERING COMMAND
PUBLIC WORKS DEPARTMENT – MAINE
PORTSMOUTH NAVAL SHIPYARD

NAVAL FACILITIES ENGINEERING COMMAND ~ MID-ATLANTIC
NAVAL SHIPYARD – PORTSMOUTH, NH
KITTERY, MAINE

COMPLETION OF DD #3
PROPULSOR ENCLOSURE

PROPULSOR ENCLOSURE POWER RISER DIAGRAMS

EPROJECT NO.: 1340001
CONSTR. CONTR. NO. 15-C-6104
NAVFAC DRAWING NO. 12684657
SHEET 27 OF 28

E4 DD3-14-658

DRAWFORM REVISION: 10 MARCH 2009

FILE NAME: P:\ME\PortsmouthNavalShipyard\Waterfront\2014_1340001_Completion of DD #3 Propulsor Enclosure\B_Design\Drawings\Final\2014_1340001_Completion of DD #3 Propulsor Enclosure 12-18-14.dwg LAYOUT NAME: E4 PLOTTED: Thursday, December 18, 2014 - 10:13am USER: ian.bodwell

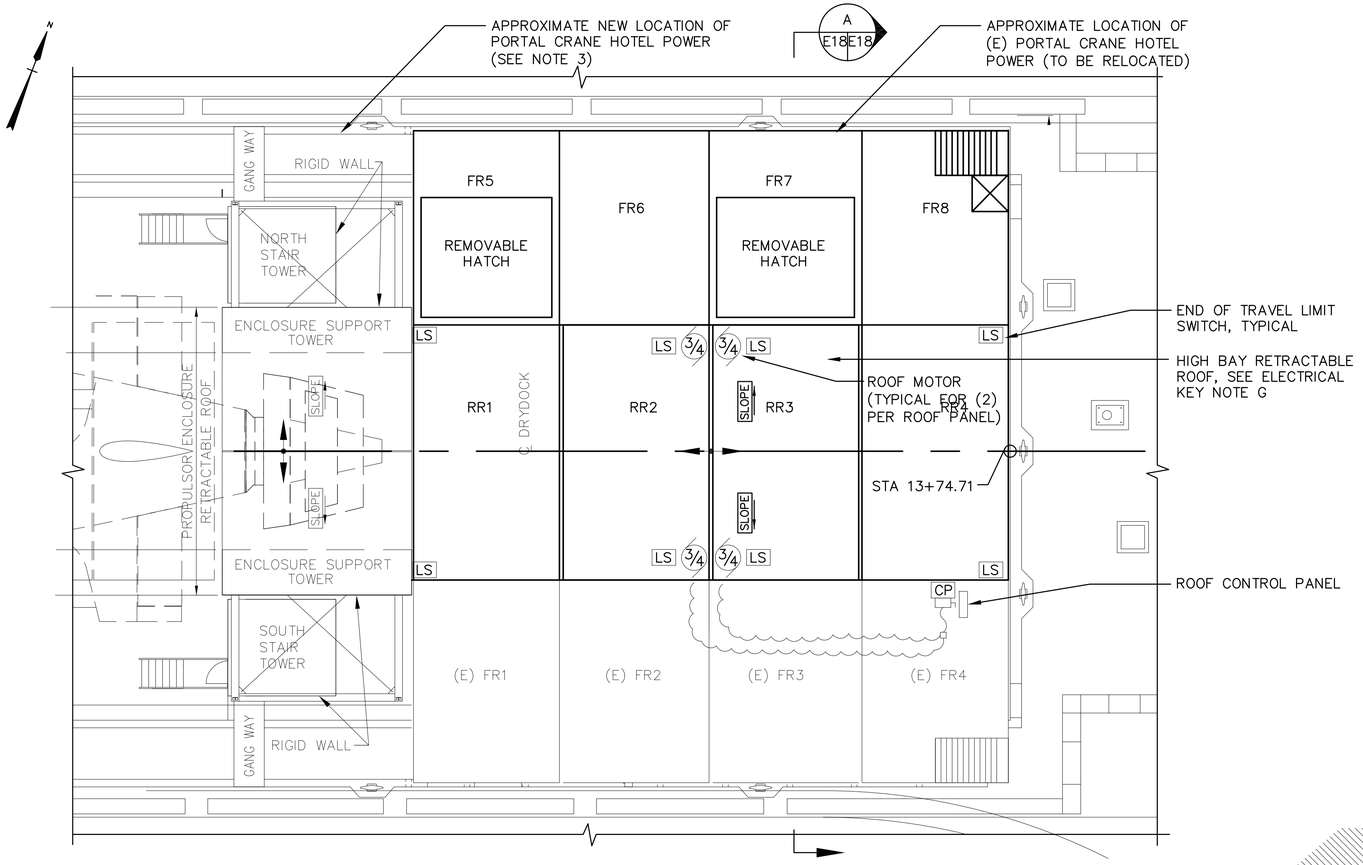

PLAN
SCALE: 1"=10'

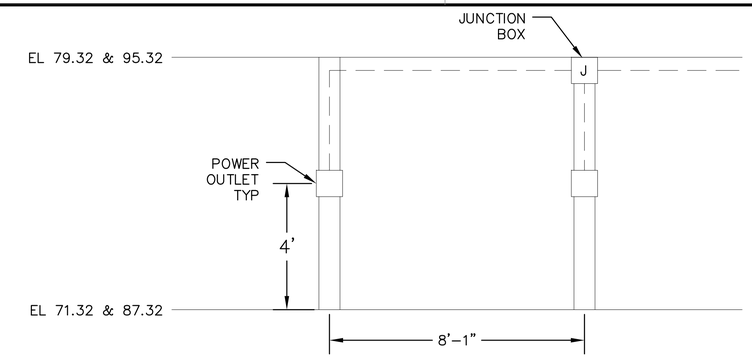

A1 EXISTING ELEVATION
SCALE: N.T.S.

NOTES: 1) REFER TO RISER STANCHION FOR CONDUIT AND WIRING SIZES

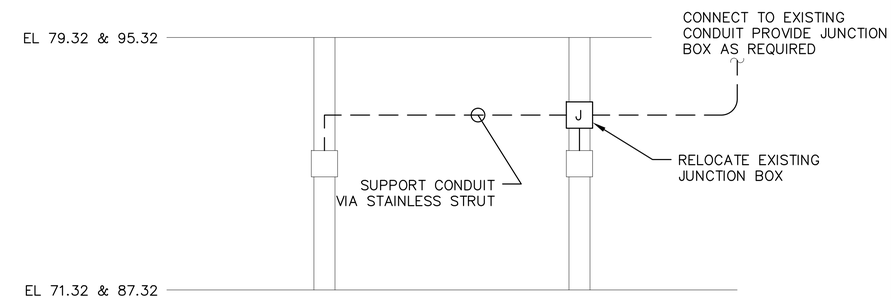

A2 PROPOSED ELEVATION
SCALE: N.T.S.

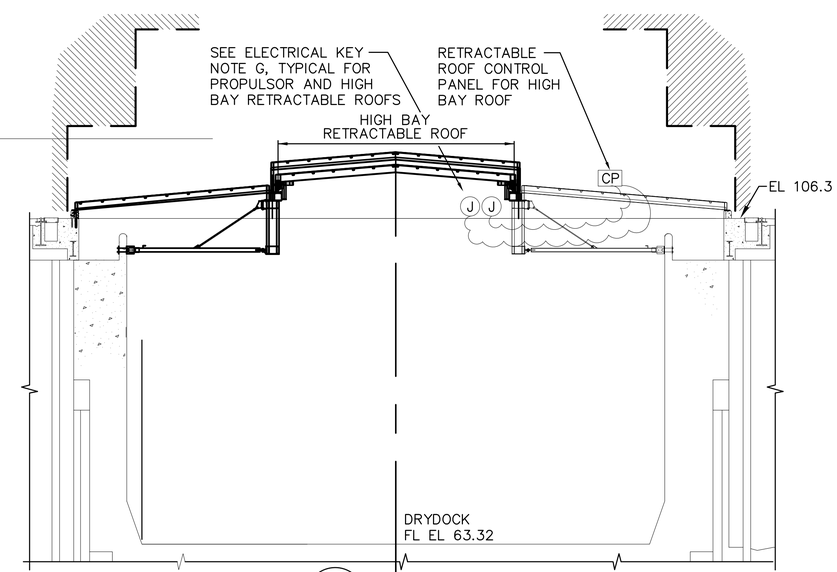

A E18E18 SECTION
SCALE: 1"=10'

ELECTRICAL NOTES:

1. REFER TO DRAWING E1 FOR ELECTRICAL LEGEND, GENERAL NOTES AND ABBREVIATIONS.
2. REFER TO DRAWINGS E19 AND E20 FOR LIGHTING FIXTURE SCHEDULE AND DETAILS.
3. CRANE HOTEL POWER IS FED FROM WEST IN NORTH GALLERY. RELOCATION SHALL INVOLVE PULLING LOCATION BACK TO CLEAR NEW FIXED ROOF SECTIONS AND INCLUDE NEW CONDUIT AND SUPPORT AS REQUIRED AND RETERMINATION OF CABLES.

HIGH BAY ROOF CONTROL PANEL INSTALLATION NOTES:

1. CONTRACTOR SHALL LOCATE HIGH BAY ROOF CONTROL PANEL ONTO FIXED ROOF 4 (FR4). CONTRACTOR SHALL PROVIDE ALL MATERIALS FOR A COMPLETE SYSTEM.
2. ROOF CONTROL SYSTEM SHALL BE STANCHION MOUNTED ON ROOF UTILIZING GALVANIZED UNISTRUT.
3. CABLING INSTALLATION FROM CONTROL PANEL TO ROOF MOTORS SHALL BE LOCATED AND COORDINATED SO AS NOT TO INTERFERE WITH ANY OTHER SYSTEMS. A CABLE REEL SYSTEM SHALL BE INSTALLED FOR THIS PURPOSE. CONNECTIONS SHALL BE ACCESSIBLE FROM THE SOUTH FIXED ROOF SECTIONS.
4. AT THE COMPLETION OF THE ROOF SYSTEM MODIFICATIONS, THE SYSTEM SHALL BE TESTED AND ALL OPERATIONS CONFIRMED PRIOR TO SYSTEM ACCEPTANCE BY THE GOVERNMENT.

GRAPHIC SCALE
1" = 10' 10 5 0 10 20 30
scale feet

SYM	DESCRIPTION	DATE	APPR
2	100% FINAL SUBMISSION	12/18/2014	ILB
1	100% PRE-FINAL SUBMISSION	11/20/2014	ILB
0	60% SUBMISSION	07/23/2017	ILB

NAVFAC

SEAL

PWD-MAINE IN HOUSE DESIGN

APPROVED

FOR COMMANDER NAVFAC

ACTIVITY

SATISFACTORY TO DATE

DES IB DRW PFG CHK NAM
PM/DM IAN BODWELL
BRANCH MANAGER NATHAN MAHER
FEAD/PM&E AMIN BAHROUR PM&E
FIRE PROTECTION X

DEPARTMENT OF THE NAVY
NAVAL FACILITIES ENGINEERING COMMAND
PUBLIC WORKS DEPARTMENT – MAINE
NAVAL FACILITIES ENGINEERING COMMAND ~ MID-ATLANTIC
NAVAL SHIPYARD – PORTSMOUTH, NH
PORTSMOUTH NAVAL SHIPYARD KITTERY, MAINE

COMPLETION OF DD #3 PROPULSOR ENCLOSURE

ELECTRICAL HIGH BAY LIGHTING AND HVAC PLAN

EPROJECT NO.: 1340001
CONSTR. CONTR. NO. 15-C-6104
NAVFAC DRAWING NO. 12684658
SHEET 28 OF 28
E5 DD3-14-659

DRAWFORM REVISION: 10 MARCH 2009

FILE NAME: P:\WE\PortsmouthNavalShipyard\Waterfront\2014_1340001_Completion of DD #3 Propulsor Enclosure\B_Design\Drawings\Final\2014_1340001_Completion of DD #3 Propulsor Enclosure 12-18-14.dwg LAYOUT NAME: E5 PLOTTED: Thursday, December 18, 2014 - 10:16am USER: ian.bodwell