MATCH LINE SHEET CD103 (NOT USED)

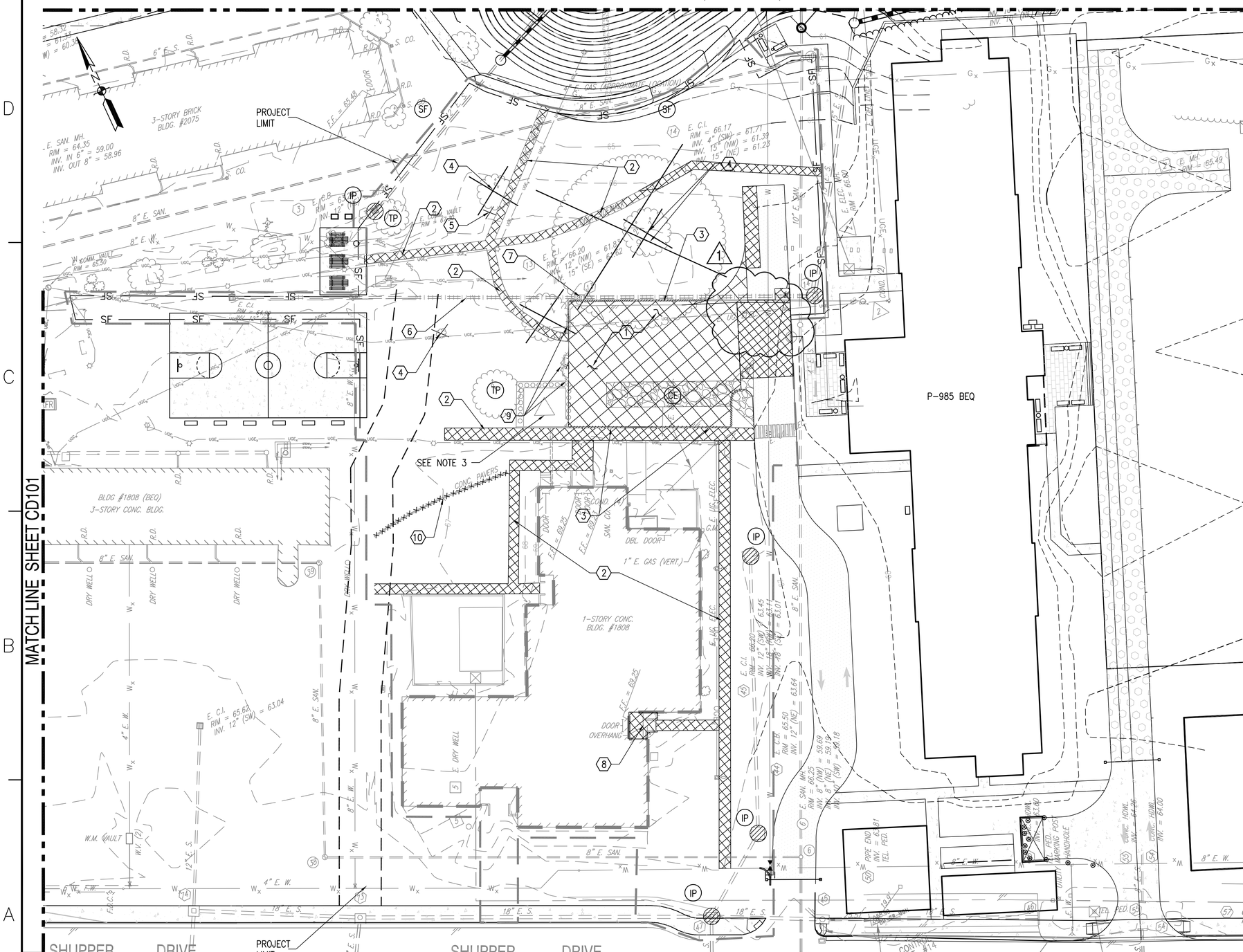

DEMOLITION, EROSION & SEDIMENT CONTROL PLAN

SCALE: 1" = 25'

PLAN NORTH

GRAPHIC SCALE

0 25' 50'

1" = 25'

SHEET NOTES

1. SEE SHEET CD101 FOR DEMOLITION NOTES & LEGEND
2. SEE SHEET CD101 FOR EROSION AND SEDIMENT LEGEND
3. ANTENNA AND BOLLARDS SHALL REMAIN
4. FIRE ACCESS LANE TO EXISTING BUILDING # 2075 MUST BE MAINTAINED AT ALL TIMES DURING CONSTRUCTION. MAINTAIN EXISTING TEMPORARY ACCESS UNTIL PERMANENT NEW FIRE ACCESS IS COMPLETE.

DEMOLITION KEYNOTES (THIS SHEET)

1 DEMOLISH ASPHALT PAVEMENT
2 DEMOLISH CONCRETE SIDEWALK
3 REMOVE CURB/ CURB & GUTTER
4 REMOVE TREE
5 REMOVE BENCH SEATING
6 DEMOLISH STORM PIPE
7 DEMOLISH STORM STRUCTURES: MANHOLE, DROP INLET, GRATE INLET
8 REMOVE CONCRETE STEPS, LANDING AND HANDRAILS
9 REMOVE FENCE, GATE & ACCESSORIES.
10 REMOVE CONCRETE PAVER

KEY PLAN

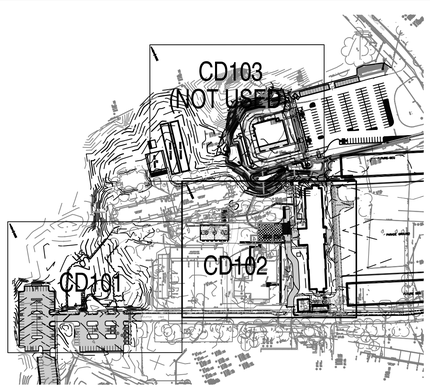

SYM	DESCRIPTION	DATE	APPR
1	REVISED DEMOLITION ASPHALT PAVEMENT AREA	03-31-15	

NAVFAC

SEAL

A/E INFO

APPROVED

FOR COMMANDER NAVFAC

ACTIVITY: LCDR W. PURCELL

SATISFACTORY TO DATE 27 OCT 2014

DES LLP DRW LLP CHK

PM PERRY

BRANCH MANAGER BJL

DM MCDONALD

FIRE PROTECTION

DEPARTMENT OF THE NAVY
NAVAL FACILITIES ENGINEERING COMMAND
HAMPTON ROADS IPT.

NAVAL FACILITIES ENGINEERING COMMAND -MID-ATLANTIC
NAVAL STATION NORFOLK, VA

NAVAL WEAPONS STATION YORKTOWN, VA

MCSFR FAST COMPANY TRAINING FACILITY

DEMOLITION, EROSION & SEDIMENT CONTROL PLAN

SCALE: AS SHOWN

EPROJECT NO. 1312141

CONSTR. CONTR. NO.

NAVFAC DRAWING NO. 12683468

SHEET 19 OF 196

CD102

DRAWFORM REVISION: 10 MARCH 2009

EROSION AND SEDIMENT CONTROL MINIMUM STANDARDS:

1. PERMANENT OR TEMPORARY SOIL STABILIZATION SHALL BE APPLIED TO DENUDED AREAS WITHIN **SEVEN (7) DAYS** AFTER FINAL GRADE IS REACHED ON ANY PORTION OF THE SITE. TEMPORARY SOIL STABILIZATION SHALL BE APPLIED WITHIN **SEVEN (7) DAYS** TO DENUDED AREAS THAT MAY NOT BE AT FINAL GRADE BUT WILL REMAIN DORMANT FOR LONGER THAN **FOURTEEN (14) DAYS**. PERMANENT STABILIZATION SHALL BE APPLIED TO AREAS THAT ARE TO BE LEFT DORMANT FOR MORE THAN ONE (1) YEAR.

2. SOIL STOCKPILES AND BORROW AREAS SHALL BE STABILIZED OR PROTECTED WITH SEDIMENT TRAPPING MEASURES.

3. A PERMANENT VEGETATIVE COVER SHALL BE ESTABLISHED ON DENUDED AREAS NOT OTHERWISE PERMANENTLY STABILIZED. PERMANENT VEGETATION SHALL NOT BE CONSIDERED ESTABLISHED UNTIL A GROUND COVER IS ACHIEVED THAT IS UNIFORM, MATURE ENOUGH TO SURVIVE AND WILL INHIBIT EROSION.

4. SEDIMENT BASINS AND TRAPS, PERIMETER DIKES, SEDIMENT BARRIERS AND OTHER MEASURES INTENDED TO TRAP SEDIMENT SHALL BE CONSTRUCTED AS A FIRST STEP IN ANY LAND-DISTURBING ACTIVITY AND SHALL BE MADE FUNCTIONAL BEFORE UPSLOPE LAND DISTURBANCE TAKES PLACE.

5. STABILIZATION MEASURES SHALL BE APPLIED TO EARTHEN STRUCTURES SUCH AS DAMS, DIKES, AND DIVERSIONS IMMEDIATELY AFTER INSTALLATION.

6. SEDIMENT TRAPS AND SEDIMENT BASINS SHALL BE DESIGNED AND CONSTRUCTED BASED UPON TOTAL DRAINAGE AREA TO BE SERVED BY THE TRAP OR BASIN.

   A. THE MINIMUM STORAGE CAPACITY OF A SEDIMENT TRAP SHALL BE 134 CUBIC YARDS PER ACRE OF DRAINAGE AREA AND THE TRAP SHALL ONLY CONTROL DRAINAGE AREAS LESS THAN THREE (3) ACRES.
   B. SURFACE RUNOFF FROM DISTURBED AREAS THAT IS COMPRISED OF FLOW FROM DRAINAGE AREAS GREATER THAN OR EQUAL TO THREE (3) ACRES SHALL BE CONTROLLED BY A SEDIMENT BASIN. THE MINIMUM STORAGE CAPACITY OF A SEDIMENT BASIN SHALL BE 134 CUBIC YARDS PER ACRE OF DRAINAGE AREA. THE OUTFALL SYSTEM SHALL, AT A MINIMUM, MAINTAIN THE STRUCTURAL INTEGRITY OF THE BASIN DURING A 25-YEAR STORM OF 24-HOUR DURATION. RUNOFF COEFFICIENTS USED IN RUNOFF CALCULATIONS SHALL CORRESPOND TO A BARE EARTH CONDITION OR THOSE CONDITIONS EXPECTED TO EXIST WHILE THE SEDIMENT BASIN IS UTILIZED.

7. CUT AND FILL SLOPES SHALL BE DESIGNED AND CONSTRUCTED IN A MANNER THAT WILL MINIMIZE EROSION. SLOPES THAT ARE FOUND TO BE ERODING EXCESSIVELY WITHIN ONE (1) YEAR OF PERMANENT STABILIZATION SHALL BE PROVIDED WITH ADDITIONAL SLOPE STABILIZING MEASURES UNTIL THE PROBLEM IS CORRECTED.

8. CONCENTRATED RUNOFF SHALL NOT FLOW DOWN CUT OR FILL SLOPES UNLESS CONTAINED WITHIN AN ADEQUATE TEMPORARY OR PERMANENT CHANNEL, FLUME, OR SLOPE DRAIN STRUCTURE.

9. WHENEVER WATER SEEPS FROM A SLOPE FACE, ADEQUATE DRAINAGE OR OTHER PROTECTION SHALL BE PROVIDED.

10. ALL STORM SEWER INLETS THAT ARE MADE OPERATIONAL DURING CONSTRUCTION SHALL BE PROTECTED SO THAT SEDIMENT-LADEN WATER CANNOT ENTER THE CONVEYANCE SYSTEM WITHOUT FIRST BEING FILTERED OR OTHERWISE TREATED TO REMOVE SEDIMENT.

11. BEFORE NEWLY CONSTRUCTED STORMWATER CONVEYANCE CHANNELS OR PIPES ARE MADE OPERATIONAL, ADEQUATE OUTLET PROTECTION AND ANY REQUIRED TEMPORARY OR PERMANENT CHANNEL LINING SHALL BE INSTALLED IN BOTH THE CONVEYANCE CHANNEL AND RECEIVING CHANNEL.

12. WHEN WORK IN A LIVE WATERCOURSE IS PERFORMED, PRECAUTIONS SHALL BE TAKEN TO MINIMIZE ENCROACHMENT, CONTROL SEDIMENT TRANSPORT AND STABILIZE THE WORK AREA TO THE GREATEST EXTENT POSSIBLE DURING CONSTRUCTION. NONERODIBLE MATERIAL SHALL BE USED FOR THE CONSTRUCTION OF CAUSEWAYS AND COFFERDAMS. EARTHEN FILL MAY BE USED FOR THESE STRUCTURES IF ARMORED BY NONERODIBLE COVER MATERIALS.

13. WHEN A LIVE WATERCOURSE MUST BE CROSSED BY CONSTRUCTION VEHICLES MORE THAN TWICE IN ANY SIX-MONTH PERIOD, A TEMPORARY VEHICULAR STREAM CROSSING CONSTRUCTED OF NONERODIBLE MATERIAL SHALL BE PROVIDED.

14. ALL APPLICABLE FEDERAL, STATE, AND LOCAL REGULATIONS PERTAINING TO WORKING IN OR CROSSING LIVE WATERCOURSES SHALL BE MET.

15. THE BED AND BANKS OF A WATERCOURSE SHALL BE STABILIZED IMMEDIATELY AFTER WORK IN THE WATERCOURSE IS COMPLETED.

16. UNDERGROUND UTILITY LINES SHALL BE INSTALLED IN ACCORDANCE WITH THE FOLLOWING STANDARDS IN ADDITION TO OTHER APPLICABLE CRITERIA:

   A. NO MORE THAN 500 LINEAR FEET OF TRENCH MAY BE OPENED AT ONE TIME.
   B. EXCAVATED MATERIAL SHALL BE PLACED ON THE UPHILL SIDE OF TRENCHES.
   C. EFFLUENT FROM DEWATERING OPERATJONS SHALL BE FILTERED OR PASSED THROUGH AN APPROVED SEDIMENT TRAPPING DEVICE, OR BOTH, AND DISCHARGED IN A MANNER THAT DOES NOT ADVERSELY AFFECT FLOWING STREAMS OR OFF-SITE PROPERTY.
   D. MATERIAL USED FOR BACKFILLING TRENCHES SHALL BE PROPERLY COMPACTED IN ORDER TO MINIMIZE EROSION AND PROMOTE STABILIZATION.
   E. RESTABILIZATION SHALL BE ACCOMPLISHED IN ACCORDANCE WITH THESE REGULATIONS.
   F. APPLICABLE SAFETY REGULATIONS SHALL BE COMPLIED WITH.

17. WHERE CONSTRUCTION VEHICLES ACCESS ROUTES INTERSECT PAVED OR PUBLIC ROADS, PROVISIONS SHALL BE MADE TO MINIMIZE THE TRANSPORT OF SEDIMENT BY VEHICULAR TRACKING ONTO THE PAVED SURFACE. WHERE SEDIMENT IS TRANSPORTED ONTO A PAVED OR PUBLIC ROAD SURFACE, THE ROAD SURFACE SHALL BE CLEANED THOROUGHLY AT THE END OF EACH DAY. SEDIMENT SHALL BE REMOVED FROM THE ROADS BY SHOVELING OR SWEEPING AND TRANSPORTED TO A SEDIMENT CONTROL DISPOSAL AREA. STREET WASHING SHALL BE ALLOWED ONLY AFTER SEDIMENT IS REMOVED IN THIS MANNER. THIS PROVISION SHALL APPLY TO INDIVIDUAL DEVELOPMENT LOTS AS WELL AS TO LARGER LAND-DISTURBING ACTIVITIES.

18. ALL TEMPORARY EROSION AND SEDIMENT CONTROL MEASURES SHALL BE REMOVED WITHIN THIRTY (30) DAYS AFTER FINAL SITE STABILIZATION OR AFTER THE TEMPORARY MEASURES ARE NO LONGER NEEDED, UNLESS OTHERWISE AUTHORIZED BY THE LOCAL PROGRAM AUTHORITY. TRAPPED SEDIMENT AND THE DISTURBED SOIL AREAS RESULTING FROM THE DEPOSITION OF TEMPORARY MEASURES SHALL BE PERMANENTLY STABILIZED TO PREVENT FURTHER EROSION AND SEDIMENTATION.

19. PROPERTIES AND WATERWAYS DOWNSTREAM FROM DEVELOPMENT SITES SHALL BE PROTECTED FROM SEDIMENT DEPOSITION, EROSION AND DAMAGE DUE TO INCREASES IN VOLUME, VELOCITY AND PEAK FLOW RATE OF STORMWATER RUNOFF FOR THE STATED FREQUENCY STORM OF 24-HOUR DURATION IN ACCORDANCE WITH THE FOLLOWING STANDARDS AND CRITERIA. STREAM RESTORATION AND RELOCATION PROJECTS THAT INCORPORATE NATURAL CHANNEL DESIGN CONCEPTS ARE NOT MAN-MADE CHANNELS AND SHALL BE EXEMPT FROM ANY FLOW RATE CAPACITY AND VELOCITY REQUIREMENTS FOR NATURAL OR MAN-MADE CHANNELS:

   A. CONCENTRATED STORMWATER RUNOFF LEAVING A DEVELOPMENT SITE SHALL BE DISCHARGED DIRECTLY INTO AN ADEQUATE NATURAL OR MAN-MADE RECEIVING CHANNEL, PIPE OR STORM SEWER SYSTEM. FOR THOSE SITES WHERE RUNOFF IS DISCHARGED INTO A PIPE OR PIPE SYSTEM, DOWNSTREAM STABILITY ANALYSES AT THE OUTFALL OF THE PIPE OR PIPE SYSTEM SHALL BE PERFORMED.

   B. ADEQUACY OF ALL CHANNELS AND PIPES SHALL BE VERIFIED IN THE FOLLOWING MANNER:

      (1) THE APPLICANT SHALL DEMONSTRATE THAT THE TOTAL DRAINAGE AREA TO THE POINT OF ANALYSIS WITHIN THE CHANNEL IS ONE HUNDRED TIMES GREATER THAN THE CONTRIBUTING DRAINAGE AREA OF THE PROJECT IN QUESTION; OR

      (2) (A) NATURAL CHANNELS SHALL BE ANALYZED BY THE USE OF A TWO-YEAR STORM TO VERIFY THAT STORMWATER WILL NOT OVERTOP CHANNEL BANKS NOR CAUSE EROSION OF CHANNEL BED OR BANKS.

      (B) ALL PREVIOUSLY CONSTRUCTED MAN-MADE CHANNELS SHALL BE ANALYZED BY THE USE OF A TEN-YEAR STORM TO VERIFY THAT STORMWATER WILL NOT OVERTOP ITS BANKS AND BY THE USE OF A TWO-YEAR STORM TO DEMONSTRATE THAT STORMWATER WILL NOT CAUSE EROSION OF CHANNEL BED OR BANKS; AND

      (C) PIPES AND STORM SEWER SYSTEMS SHALL BE ANALYZED BY THE USE OF A TEN-YEAR STORM TO VERIFY THAT STORMWATER WILL BE CONTAINED WITHIN THE PIPE OR SYSTEM.

   C. IF EXISTING NATURAL RECEIVING CHANNELS OR PREVIOUSLY CONSTRUCTED MAN-MADE CHANNELS OR PIPES ARE NOT ADEQUATE, THE APPLICANT SHALL:

      (1) IMPROVE THE CHANNELS TO A CONDITION WHERE A TEN-YEAR STORM WILL NOT OVERTOP THE BANKS AND A TWO-YEAR STORM WILL NOT CAUSE EROSION TO THE CHANNEL, THE BED, OR THE BANKS; OR

      (2) IMPROVE THE PIPE OR PIPE SYSTEM TO A CONDITION WHERE THE TEN-YEAR STORM IS CONTAINED WITHIN THE APPURTENANCES;

      (3) DEVELOP A SITE DESIGN THAT WILL NOT CAUSE THE PRE-DEVELOPMENT PEAK RUNOFF RATE FROM A TWO-YEAR STORM TO INCREASE WHEN RUNOFF OUTFALLS INTO A NATURAL CHANNEL OR WILL NOT CAUSE THE PRE-DEVELOPMENT PEAK RUNOFF RATE FROM A TEN-YEAR STORM TO INCREASE WHEN RUNOFF OUTFALLS INTO A MAN-MADE CHANNEL; OR

      (4) PROVIDE A COMBINATION OF CHANNEL IMPROVEMENT, STORMWATER DETENTION OR OTHER MEASURES WHICH IS SATISFACTORY TO THE VESCP AUTHORITY TO PREVENT DOWNSTREAM EROSION.

   D. THE APPLICANT SHALL PROVIDE EVIDENCE OF PERMISSION TO MAKE THE IMPROVEMENTS.

   E. ALL HYDROLOGIC ANALYSES SHALL BE BASED ON THE EXISTING WATERSHED CHARACTERISTICS AND THE ULTIMATE DEVELOPMENT CONDITION OF THE SUBJECT PROJECT.

   F. IF THE APPLICANT CHOOSES AN OPTION THAT INCLUDES STORMWATER DETENTION, HE SHALL OBTAIN APPROVAL FROM THE VESCP OF A PLAN FOR MAINTENANCE OF THE DETENTION FACILITIES. THE PLAN SHALL SET FORTH THE MAINTENANCE REQUIREMENTS OF THE FACILITY AND THE PERSON RESPONSIBLE FOR PERFORMING THE MAINTENANCE.

   G. OUTFALL FROM A DETENTION FACILITY SHALL BE DISCHARGED TO A RECEIVING CHANNEL, AND ENERGY DISSIPATORS SHALL BE PLACED AT THE OUTFALL OF ALL DETENTION FACILITIES AS NECESSARY TO PROVIDE A STABILIZED TRANSITION FROM THE FACILITY TO THE RECEIVING CHANNEL.

   H. ALL ON-SITE CHANNELS MUST BE VERIFIED TO BE ADEQUATE.

   I. INCREASED VOLUMES OF SHEET FLOWS THAT MAY CAUSE EROSION OR SEDIMENTATION ON ADJACENT PROPERTY SHALL BE DIVERTED TO A STABLE OUTLET, ADEQUATE CHANNEL, PIPE OR PIPE SYSTEM, OR TO A DETENTION FACILITY.

   J. IN APPLYING THESE STORMWATER MANAGEMENT CRITERIA, INDIVIDUAL LOTS OR PARCELS IN A RESIDENTIAL, COMMERCIAL OR INDUSTRIAL DEVELOPMENT SHALL NOT BE CONSIDERED TO BE SEPARATE DEVELOPMENT PROJECTS. INSTEAD, THE DEVELOPMENT, AS A WHOLE, SHALL BE CONSIDERED TO BE A SINGLE DEVELOPMENT PROJECT. HYDROLOGIC PARAMETERS THAT REFLECT THE ULTIMATE DEVELOPMENT CONDITION SHALL BE USED IN ALL ENGINEERING CALCULATIONS.

   K. ALL MEASURES USED TO PROTECT PROPERTIES AND WATERWAYS SHALL BE EMPLOYED IN A MANNER WHICH MINIMIZES IMPACTS ON THE PHYSICAL, CHEMICAL AND BIOLOGICAL INTEGRITY OF RIVERS, STREAMS AND OTHER WATERS OF THE STATE.

   L. ANY PLAN APPROVED PRIOR TO JULY 1, 2014, THAT PROVIDES FOR STORMWATER MANAGEMENT THAT ADDRESSES ANY FLOW RATE CAPACITY AND VELOCITY REQUIREMENTS FOR NATURAL OR MAN-MADE CHANNELS SHALL SATISFY THE FLOW RATE CAPACITY AND VELOCITY REQUIREMENTS FOR NATURAL OR MAN-MADE CHANNELS IF THE PRACTICES ARE DESIGNED TO (I) DETAIN THE WATER QUALITY VOLUME AND TO RELEASE IT OVER 48 HOURS; (II) DETAIN AND RELEASE OVER A 24-HOUR PERIOD THE EXPECTED RAINFALL RESULTING FROM THE ONE YEAR, 24-HOUR STORM; AND (III) REDUCE THE ALLOWABLE PEAK FLOW RATE RESULTING FROM THE 1.5, 2, AND 10-YEAR, 24-HOUR STORMS TO A LEVEL THAT IS LESS THAN OR EQUAL TO THE PEAK FLOW RATE FROM THE SITE ASSUMING IT WAS IN A GOOD FORESTED CONDITION, ACHIEVED THROUGH MULTIPLICATION OF THE FORESTED PEAK FLOW RATE BY A REDUCTION FACTOR THAT IS EQUAL TO THE RUNOFF VOLUME FROM THE SITE WHEN IT WAS IN A GOOD FORESTED CONDITION DIVIDED BY THE RUNOFF VOLUME FROM THE SITE IN ITS PROPOSED CONDITION, AND SHALL BE EXEMPT FROM ANY FLOW RATE CAPACITY AND VELOCITY REQUIREMENTS FOR NATURAL OR MAN-MADE CHANNELS AS DEFINED IN ANY REGULATIONS PROMULGATED PURSUANT TO § **62.1-44.15:54** OR **62.1-44.15:65** OF THE ACT.

   M. FOR PLANS APPROVED ON AND AFTER JULY 1, 2014, THE FLOW RATE CAPACITY AND VELOCITY REQUIREMENTS OF § **62.1-44.15:52** A OF THE ACT AND THIS SUBSECTION SHALL BE SATISFIED BY COMPLIANCE WITH WATER QUANTITY REQUIREMENTS IN THE STORMWATER MANAGEMENT ACT (§ **62.1-44.15:24** ET SEQ. OF THE CODE OF VIRGINIA) AND ATTENDANT REGULATIONS, UNLESS SUCH LAND-DISTURBING ACTIVITIES ARE IN ACCORDANCE WITH **9VAC25-870-48** OF THE VIRGINIA STORMWATER MANAGEMENT PROGRAM (VSMP) REGULATIONS.

   N. COMPLIANCE WITH THE WATER QUANTITY MINIMUM STANDARDS SET OUT IN **9VAC25-870-66** OF THE VIRGINIA STORMWATER MANAGEMENT PROGRAM (VSMP) REGULATIONS SHALL BE DEEMED TO SATISFY THE REQUIREMENTS OF SUBDIVISION 19 OF THIS SUBSECTION.

EROSION & SEDIMENT CONTROL NARRATIVE

PROJECT DESCRIPTION:
THIS PROJECT CONSISTS OF CONSTRUCTING A REMOTE PARKING LOT, FIRE LANE (AREA 1) AND CONSTRUCT A MCSFR FAST TRAINING FACILITY ALONG WITH RENOVATION OF EXISTING 1-STORY CONCRETE BUILDING, ALL ASSOCIATED STREET IMPROVEMENTS, STORM SEWER, WATER AND SANITARY SEWER IMPROVEMENTS (AREA 2).

AREA 1: LAND DISTURBANCE DUE TO THIS CONSTRUCTION IS APPROXIMATELY 0.83 ACRES. THE CURRENT SITE IS MOSTLY WOODED AND 100% PERVIOUS. THE POST-DEVELOPMENT SITE ADD 0.36 ACRES OF IMPERVIOUS AREA (43%). SEDIMENT CONTROL FOR THE PROPOSED CONSTRUCTION ACTIVITIES WILL BE IN ACCORDANCE WITH THE POLICIES AND REQUIREMENTS OF THE VIRGINIA EROSION & SEDIMENT CONTROL HANDBOOK. THIS PLAN PROPOSES EROSION AND SEDIMENT CONTROL IN ONE PHASE.

AREA 2: LAND DISTURBANCE DUE TO THIS CONSTRUCTION IS APPROXIMATELY 1.40 ACRES. THE EXISTING SITE INCLUDES 0.36 ACRES OF IMPERVIOUS AREA (26%). THE POST-DEVELOPMENT SITE WILL INCREASE IMPERVIOUS AREA IN TOTAL 0.46 ACRES (33%). SEDIMENT CONTROL FOR THE PROPOSED CONSTRUCTION ACTIVITIES WILL BE IN ACCORDANCE WITH THE POLICIES AND REQUIREMENTS OF THE VIRGINIA EROSION & SEDIMENT CONTROL HANDBOOK. THIS PLAN PROPOSES EROSION AND SEDIMENT CONTROL IN ONE PHASE.

EXISTING SITE CONDITIONS:
AREA 1: THE EXISTING SITE IS GENERALLY UNDEVELOPED AND IS COVERED WITH GRASS/WOODS. THE EXISTING SLOPE RANGES FROM 0% TO 10%. THE ENTIRE SITE DRAINS TO THE NORTHWEST THROUGH OVERLAND.

AREA 2: THE EXISTING SITE IS GENERALLY DEVELOPED AND IS COVERED WITH PAVED, ROOF AND GRASS. THE EXISTING SLOPE RANGES FROM 0% TO 2%. ROOF DRAINAGE FROM THE EXISTING 1-STORY CONCRETE BUILDING AN PAVED AREA IS THROUGH OVERLAND AND COLLECTED BY EXISTING DROP INLETS AND CONVEYANCES EMPTIES INTO THE STORM SEWER VIA AN EXISTING CULVERT

ADJACENT PROPERTY:
AREA 1: THE SITE IS BOUND TO THE SOUTH BY SHUPPER DRIVE AND A PARKING LOT UNDER CONSTRUCTION, TO THE EAST BY EXISTING BUILDING 3-STORY CONCRETE AND BRICK BUILDINGS, AND TO THE NORTH BY WOODED AREA.

AREA 2: THE SITE IS BOUNDED TO THE NORTH BY EXISTING 1 STORY BUILDING UNDER CONSTRUCTION, TO THE EAST IS 3-STORY BUILDING UNDER CONSTRUCTION, TO THE SOUTH IS SHUPPER DRIVE AND TO THE WEST IS EXISTING 3 STORY CONCRETE BUILDING.

THE POTENTIAL FOR OFFSITE DAMAGES IS NEGLIGIBLE. THERE ARE NO KNOWN OFF SITE ENVIRONMENTALLY SENSITIVE AREAS. PERIMETER CONTROLS TO BE USED TO PROTECT THE ADJACENT AREAS INCLUDE SILT FENCE. SEE THE EROSION CONTROL PLAN FOR ALL PERIMETER CONTROLS

OFF-SITE AREAS:
NO OFFSITE BORROW OR DISPOSAL SITES AREA EXPECTED. ANY ADDITIONAL OFFSITE LAND-DISTURBING ACTIVITY ASSOCIATED WITH THIS PROJECT MUST HAVE AN APPROVED EROSION AND SEDIMENT CONTROL PLAN.

SOILS DATA:
THE SUBSURFACE SOILS AT THE SITE CONSIST OF 3 TO 4 INCHES OF TOPSOIL OVERLYING A LAYER OF UNCONTROLLED FILL AT MOST LOCATIONS TO THE DEPTH OF 2 TO 6 FEET, VERY SOFT TO SOFT SILT AND VERY LOOSE TO LOOSE SAND. FOR MORE DETAILED INFORMATION REGARDING THE SITE SOILS PLEASE REFER TO THE GEOTECHNICAL REPORT PREPARED BY GER CONSULTING ENGINEERS, DATED SEPTEMBER 2014.

CRITICAL AREAS:
SPECIAL CARE SHALL BE TAKEN TO PROTECT THE EXISTING TREES AND VEGETATION ON THE SITE.

SEDIMENT CONTROL PROGRAM:
SEDIMENT CONTROL SHALL BE ACCOMPLISHED THROUGH RAPID STABILIZATION AND BY THE INSTALLATION OF MECHANICAL DEVICES, AS SHOWN ON THE E&S PLAN:

STRUCTURAL PRACTICES:
1. TEMPORARY CONSTRUCTION ENTRANCE – A STABILIZED STONE PAD WITH FILTER FABRIC UNDERLINER WILL BE INSTALLED AT EACH POINT OF VEHICULAR INGRESS AND EGRESS TO THE CONSTRUCTION SITE, AS SHOWN ON THE PLAN.
2. TREE PROTECTION (TP)
3. SILT FENCE (SF)
4. INLET PROTECTION (IP) & CULVERT INLET PROTECTION (CIP)
5. RIPRAP OUTLET PROTECTION TO SLOW AND SPREAD CONCENTRATED FLOW BEFORE RELEASE TO THE DOWNSTREAM AREA.

VEGETATIVE PRACTICES:
1. SURFACE ROUGHENING -AREAS TO BE SEEDED SHALL BE LIGHTLY ROUGHENED & LOOSE TO A DEPTH OF 2" TO 4" PRIOR TO SEEDING. AREAS, WHICH HAVE BEEN GRADED AND WILL NOT BE STABILIZED IMMEDIATELY, MAY BE ROUGHENED TO REDUCE VELOCITY UNTIL SEEDING TAKES PLACE.
2. TOP SOILING (STOCKPILES) -TOPSOIL WILL BE STRIPPED FROM AREAS TO BE GRADED AND STOCKPILED FOR LATER USE. STOCKPILE LOCATIONS SHALL BE LOCATED ON-SITE IN OPEN SPACE AREAS AND TO BE STABILIZED WITH TEMPORARY VEGETATION. SILT FENCES SHALL BE INCLUDED AROUND ALL STOCKPILE AREAS.
3. TEMPORARY SEEDING -ALL DENUDED AREAS THAT WILL BE LEFT DORMANT FOR EXTENDED PERIODS OF TIME PER MINIMUM STANDARD NO. 1 SHALL BE SEEDED WITH FAST GERMINATING TEMPORARY VEGETATION IMMEDIATELY FOLLOWING GRADING. SELECTION OF THE SEED MIXTURE WILL DEPEND ON THE TIME OF THE YEAR IT IS APPLIED.
4. EROSION CONTROL BLANKETS OR MULCH -EROSION CONTROL BLANKETS WILL BE INSTALLED OVER FILL SLOPES WHICH HAVE BEEN BROUGHT TO FINAL GRADE AND SEEDED TO PROTECT THE SLOPES FROM RILL AND GULLY EROSION AND ALLOW THE SEED TO GERMINATE PROPERLY. MULCH (STRAW OR FIBER) WILL BE USED ON RELATIVELY FLAT AREAS AND WILL BE APPLIED AS A SECOND STEP IN THE SEEDING OPERATION.
5. ALL SILTATION CONTROL MEASURES ARE INTENDED TO PREVENT SEDIMENT FROM ENCROACHING INTO ENVIRONMENTALLY SENSITIVE AREAS OR ONTO ADJACENT PROPERTIES AND ROADWAYS. THE INSPECTOR HAS THE AUTHORITY TO ADD OR DELETE EROSION AND SEDIMENT CONTROLS IN THE FIELD AS SITE CONDITIONS WARRANT. IN ADDITION, NO SEDIMENT TRAPS OR SEDIMENT BASINS MAY BE REMOVED WITHOUT THE PRIOR APPROVAL OF THE INSPECTOR. SEDIMENT CONTROL "MAINTENANCE PROGRAM" DESCRIBED BELOW.
6. OBTAIN INSPECTOR'S APPROVAL PRIOR TO THE REMOVAL OF THE REMAINING MECHANICAL SEDIMENT CONTROLS.

PERMANENT STABILIZATION:
ALL AREAS DISTURBED BY CONSTRUCTION SHALL BE STABILIZED WITH PERMANENT SEEDING IMMEDIATELY FOLLOWING FINISH GRADING. SEEDING SHALL BE DONE WITH KENTUCKY 31 TALL FESCUE ACCORDING TO STD. & SPEC. 3.32, PERMANENT SEEDING, OF THE VIRGINIA EROSION AND SEDIMENT CONTROL HANDBOOK. EROSION CONTROL BLANKETS WILL BE INSTALLED OVER FILL SLOPES WHICH HAVE BEEN BROUGHT TO FINAL GRADE AND HAVE BEEN SEEDED. THIS WILL PROTECT THE SLOPES FROM RILL AND GULLY EROSION AND ALLOW THE SEED TO GERMINATE PROPERLY. MULCH (STRAW OR FIBER) WILL BE USED ON RELATIVELY FLAT AREAS. IN ALL SEEDING OPERATIONS, SEED, FERTILIZER AND LIME WILL BE APPLIED PRIOR TO MULCHING.

STORMWATER MANAGEMENT:
STORMWATER MANAGEMENT IS TO BE HANDLED BY STORM SEWERS THAT WILL COLLECT AND DRAIN THE STORM WATER EITHER TO AN UNDERGROUND STORM BMP AND A STORMWATER QUALITY CONTROL UNIT PRIOR TO ULTIMATE CONVEYANCE TO THE STORM SEWER.

MAINTENANCE PROGRAM:
IN GENERAL ALL EROSION AND SEDIMENT CONTROL MEASURES WILL BE CHECKED DAILY AND AFTER EACH SIGNIFICANT RAINFALL EVENT. ANY NECESSARY REPAIR OR CLEAN UP TO MAINTAIN THE EFFECTIVENESS OF THE EROSION CONTROL DEVICES SHALL BE MADE IMMEDIATELY. THE FOLLOWING MEASURES WILL BE CHECKED IN PARTICULAR:

CONSTRUCTION ENTRANCES: INSPECTIONS SHALL BE MADE DAILY FOR ENTRANCE INTEGRITY; REQUIRED REPAIRS SHALL BE MADE IMMEDIATELY. TOP DRESS CONSTRUCTION ENTRANCE WITH VDOT #1 COARSE AGGREGATE WHEN NEEDED.
SILT FENCE: INSPECTIONS SHALL BE MADE DAILY FOR FENCE INTEGRITY; REQUIRED REPAIRS SHALL BE MADE IMMEDIATELY. SEDIMENT IS TO BE REMOVED WHEN DEPOSITS REACH ONE-HALF THE FENCE HEIGHT.
INLET PROTECTION: INLETS SHALL BE CHECKED FOR SEDIMENT ACCUMULATION AS NEEDED. REMOVE SEDIMENT WHEN GREATER THAN ONE HALF DESIGN DEPTH OF THE TRAP.
TREE PROTECTION: INSPECTIONS SHALL BE MADE DAILY FOR FENCE INTEGRITY; REQUIRED REPAIR SHALL BE MADE IMMEDIATELY.
PERMANENT SEEDING: SEEDED AREAS SHALL BE CHECKED REGULARLY TO ASSURE A GOOD STAND OF GRASS IS BEING MAINTAINED. AREAS THAT FAIL TO ESTABLISH VEGETATIVE COVER ADEQUATE TO PREVENT RILL EROSION SHALL BE RE-SEEDED AS SOON AS THEY ARE IDENTIFIED.
MULCHING: ALL MULCHED AREAS SHALL BE INSPECTED PERIODICALLY, PARTICULARLY AFTER RAINSTORMS, TO CHECK FOR RILL EROSION; REPAIR AS NEEDED.
OUTLET PROTECTION: CHECK FOR SCOUR, REPLACE RIPRAP AS NEEDED.

1

PHASING OF LAND DISTURBING ACTIVITIES:
SEDIMENT CONTROL IS PROVIDED THROUGH A ONE-PHASED APPROACH.

OPERATIONS WILL INCLUDE THE CONSTRUCTION NEEDED TO DIVERT MAJOR OFF-SITE CLEAN WATER AND ON-SITE DRAINAGE FLOWS AROUND THE WORK AREA AND CONTROL EROSION AND SILTATION ASSOCIATED WITH INITIAL CLEARING AND GRADING OPERATIONS. AS REQUIRED, PHASE I CONTROLS SHALL BE ESTABLISHED IN A ONE (1) STEP PROCESS:

1. CONTRACTOR TO OBTAIN VPDES PERMIT. CONTRACTOR, RESPONSIBLE LAND DISTURBER AND CONSTRUCTION MANAGER SHALL ATTEND A PRE-CONSTRUCTION MEETING WITH THE INSPECTOR PRIOR TO STARTING ANY LAND DISTURBING ACTIVITIES.

2. INSTALL CONSTRUCTION ENTRANCE (CE) AS SHOWN ON THE PLAN. PROVIDE THE CONSTRUCTION ENTRANCE AND ESTABLISH A PROTECTED STAGING AND EQUIPMENT PARKING AREA.

3. INSTALL THE REMAINING MECHANICAL CONTROLS SUCH AS SILT FENCE (SF), INLET PROTECTION (IP) AND TREE PROTECTION (TP) AS SHOWN ON THE PLAN.

4. CONTACT THE INSPECTOR FOR AN E&S PERIMETER INSPECTION PRIOR TO STARTING THE CLEARING AND GRUBBING OF REMAINING SITE.

5. CLEARING AND GRUBBING OR REMOVAL OF EXISTING VEGETATION MUST BE LIMITED WITHIN THE LIMITS OF CLEARING, AS SHOWN ON THE PLAN.

6. ROUGH GRADE THE PARKING

7. INSTALL UTILITIES.

8. INSTALL THE STORM SEWER SYSTEM AND UNDERGROUND STORM BMP AND PROVIDE ADDITIONAL INLET PROTECTIONS FOR NEW STORM STRUCTURES.

9. CONSTRUCT THE BASE PAVEMENT FOR THE PARKING AND PERMANENTLY STABILIZE SITE BY SURFACE ROUGHENING FOLLOWED BY PLANTING AND SEEDING.

10. INSTALL FINAL PAVEMENT.

DEVICES SHOWN ARE TO BE CONSIDERED AS MINIMUM EROSION AND SEDIMENTATION CONTROLS. ADDITIONAL CONTROLS MAY BE NECESSARY DUE TO CONTRACTOR'S PHASING OR OTHER UNANTICIPATED CONDITIONS. THE EROSION AND SEDIMENT CONTROL INSPECTOR HAS THE RIGHT TO ADD OR REMOVE CONTROLS AS DEEMED NECESSARY IN THE FIELD. IT IS THE CONTRACTOR'S RESPONSIBILITY TO PROVIDE ADDITIONAL DEVICES AS NECESSARY IN ORDER TO CONTROL EROSION AND SEDIMENTATION AT NO ADDITIONAL COST TO THE GOVERNMENT. EROSION AND SEDIMENTATION MEASURES SHALL BE INSTALLED AND MAINTAINED IN ACCORDANCE WITH THE STANDARDS AND SPECIFICATIONS IN THE VIRGINIA EROSION AND SEDIMENT CONTROL HANDBOOK, THIRD EDITION. THE CONTRACTOR IS TO PROVIDE ADEQUATE MEANS OF CLEANING AND REMOVING ALL LAYING DUST AS NECESSARY BY APPLYING EITHER MOISTURE, CALCIUM CHLORIDE, OR OTHER APPROVED MATERIALS ALONG THOSE SECTIONS OF THE PROJECT ADJACENT TO EXISTING FACILITIES OR PUBLIC ACCESS. CONTROLS MAY BE REMOVED AFTER THE AREAS ABOVE THEM HAVE BEEN STABILIZED AND WITH THE APPROVAL OF THE INSPECTOR.

SPECIAL CARE NOTES:
IT IS THE INTENT OF THIS PLAN TO PRECLUDE SEDIMENT POLLUTION FROM LEAVING THE DELINEATED CONSTRUCTION ZONES.

THE CONTRACTOR AND THE RESPONSIBLE LAND DISTURBER SHALL TAKE SPECIAL CARE TO PREVENT CONSTRUCTION DEBRIS AND MUD FROM BEING TRACKED ONTO SURROUNDING ROADS.

THE CONTRACTOR AND RESPONSIBLE LAND DISTURBER SHALL TAKE SPECIAL CARE TO PROTECT THE EXISTING VEGETATION AND STREAMS OUTSIDE OF THE DESIGNATED LIMITS OF WORK SHOWN ON THE PLANS.

EROSION AND SEDIMENT CONTROL GENERAL NOTES:

1. UNLESS OTHERWISE INDICATED, ALL VEGETATIVE AND STRUCTURAL EROSION AND SEDIMENT CONTROL PRACTICES WILL BE CONSTRUCTED AND MAINTAINED ACCORDING TO MINIMUM STANDARDS AND SPECIFICATIONS OF THE VIRGINIA EROSION AND SEDIMENT CONTROL HANDBOOK AND VIRGINIA REGULATIONS 4VAC25-840 EROSION AND SEDIMENT CONTROL REGULATIONS.

2. THE PLAN APPROVING AUTHORITY MUST BE NOTIFIED ONE WEEK PRIOR TO THE PRE-CONSTRUCTION CONFERENCE, ONE WEEK PRIOR TO THE COMMENCEMENT OF LAND DISTURBING ACTIVITY, AND ONE WEEK PRIOR TO THE FINAL INSPECTION.

3. ALL APPROPRIATE EROSION CONTROL MEASURES SUCH AS, BUT NOT LIMITED TO, TREE PROTECTION, SILT FENCE, CONSTRUCTION ENTRANCE, SEDIMENT TRAPPING FACILITIES, AND INLET PROTOECTION SHALL BE INSTALLED PRIOR TO THE START OF CONSTRUCTION AND MUST BE REVIEWED AND APPROVED BY THE INSPECTOR BEFORE ANY CLEARING OPERATIONS BEGIN.

4. A COPY OF THE APPROVED EROSION AND SEDIMENT CONTROL PLAN AND LAND DISTURBANCE PERMIT MUST BE MAINTAINED AT THE SITE FOR THE DURATION OF ALL CONSTRUCTION AND LAND-DISTURBING ACTIVITIES.

5. THE CONTRACTOR SHALL CONSTRUCT AND MAINTAIN ALL APPROVED MEASURES AS SHOWN ON THE DRAWINGS. ANY ADDITIONAL MEASURES DEEMED REQUIRED BY THE PLAN APPROVING AUTHORITY SHALL BECOME PART OF THE EROSION AND SEDIMENT CONTROL PLAN FOR THE PROPERTY. ALL FIELD CHANGES MUST BE APPROVED BY THE PLAN APPROVING AUTHORITY.

6. DURING DEWATERING OPERATIONS, WATER SHALL BE PUMPED INTO AN APPROVED FILTERING DEVICE.

7. THE CONTRACTOR .SHALL CONSTRUCT AND MAINTAIN ALL MEASURES TO PREVENT SOIL FROM ERODING ONTO ADJACENT PROPERTY, STREETS, DRAINAGE SYSTEMS, AND WATERWAYS. ALL DEVICES SHALL BE CLEANED OF MUD, DEBRIS, AND OTHER ERODED MATERIAL DURING THE SITE CLEARING AND DEVELOPMENT. INSPECTION OF DEVICES SHALL BE AT A MINIMUM EVERY TWO (2) WEEKS AND REQUIRED AFTER EVERY RAINFALL EVENT. ALL INSPECTION AND MAINTENANCE ACTIVITIES SHALL BE DOCUMENTED AND AVAILABLE FOR REVIEW AT THE PLAN REVIEWING AUTHORITIES REQUEST.

8. TEMPORARY AND PERMANENT SEEDING OPERATIONS SHALL BE INITIATED WITHIN SEVEN (7) DAYS AFTER REACHING FINAL GRADE OR UPON SUSPENSION OF GRADING OPERATIONS FOR ANTICIPATED DURATION OF GREATER THAN FOURTEEN (14) DAYS OR UPON COMPLETION OF GRADING OPERATIONS FOR A SPECIFIC AREA.

9. EROSION AND SEDIMENT CONTROL MEASURES SHALL BE KEPT IN PLACE FOR THE DURATION OF THE CLEARING AND CONSTRUCTION OPERATIONS AND AT A MAXIMUM FOR THE SPECIFIED TIME FOR EACH MEASURE AS IDENTIFIED IN THE VESC HANDBOOK, OR WHEN FULL STABILIZATION HAS OCCURRED FOR THE ENTIRE SITE. A FINAL INSPECTION BY THE PLAN APPROVING AUTHORITY SHALL DETERMINE WHEN THIS FACT IS ACCOMPLISHED AND ALL TEMPORARY MEASURES AND DEVICES CAN BE REMOVED.

10. THE CONTRACTOR SHALL MONITOR AND TAKE PRECAUTIONS TO CONTROL DUST AND OTHER AIR POLLUTANTS, INCLUDING BUT NOT LIMITED TO USING WATER OR CHEMICALS, LIMITING THE NUMBER OF VEHICLES ALLOWED ONSITE, MINIMIZING THE OPERATING SPEED OF ALL VEHICLES, ETC. ALSO, THE CONTRACTOR WILL BE RESPONSIBLE FOR THE DAILY SWEEPING SHOULD SEDIMENT ACCUMULATE ON PAVED SURFACES.

REGISTERED LAND DISTURBER:

THE CONTRACTOR SELECTED TO COMPLETE THE REGULATED LAND DISTURBING ACTIVITY AS SHOWN ON THESE DRAWINGS IS RESPONSIBLE FOR IMPLEMENTING THE APPROVED EROSION AND SEDIMENT CONTROL PLAN IN CONJUNCTION WITH THE PROJECT SPECIFICATIONS. PRIOR TO THE COMMENCEMENT OF THIS ACTIVITY, IN ACCORDANCE WITH THE VIRGINIA EROSION AND SEDIMENT CONTROL LAW, THE CONTRACTOR SHALL DESIGNATE AN INDIVIDUAL HOLDING A CERTIFICATE OF COMPETENCE WITH THE COMMONWEALTH OF VIRGINIA AS THE PERSON RESPONSIBLE FOR CARRYING OUT THE APPROVED PLAN, AND PROVIDE THE NAME OF THAT INDIVIDUAL TO THE PLAN APPROVING AUTHORITY.

SYM	DESCRIPTION	DATE	APPR
1	REVISED MAINTENANCE PROGRAM LANGUAGE	03-31-15	

NAVFAC

SEAL

A/E INFO

APPROVED

FOR COMMANDER NAVFAC

ACTIVITY

LCDR W. PURCELL

SATISFACTORY TO DATE 27 OCT 2014

DES LLP DRW LLP CHK

PM PERRY

BRANCH MANAGER BJL

DM MCDONALD

FIRE PROTECTION

DEPARTMENT OF THE NAVY NAVAL FACILITIES ENGINEERING COMMAND
NAVAL FACILITIES ENGINEERING COMMAND -MID-ATLANTIC
HAMPTON ROADS IPT NAVAL STATION NORFOLK, VA
NAVAL WEAPONS STATION YORKTOWN, VA

MCSFR FAST COMPANY TRAINING FACILITY

EROSION AND SEDIMENT CONTROL NOTES

SCALE: AS SHOWN

EPROJECT NO.: 1312141

CONSTR. CONTR. NO.

NAVFAC DRAWING NO. 12683469

SHEET 20 OF 196

CD501

DRAWFORM REVISION: 10 MARCH 2009

MATCH LINE SHEET CP103 (NOT USED)

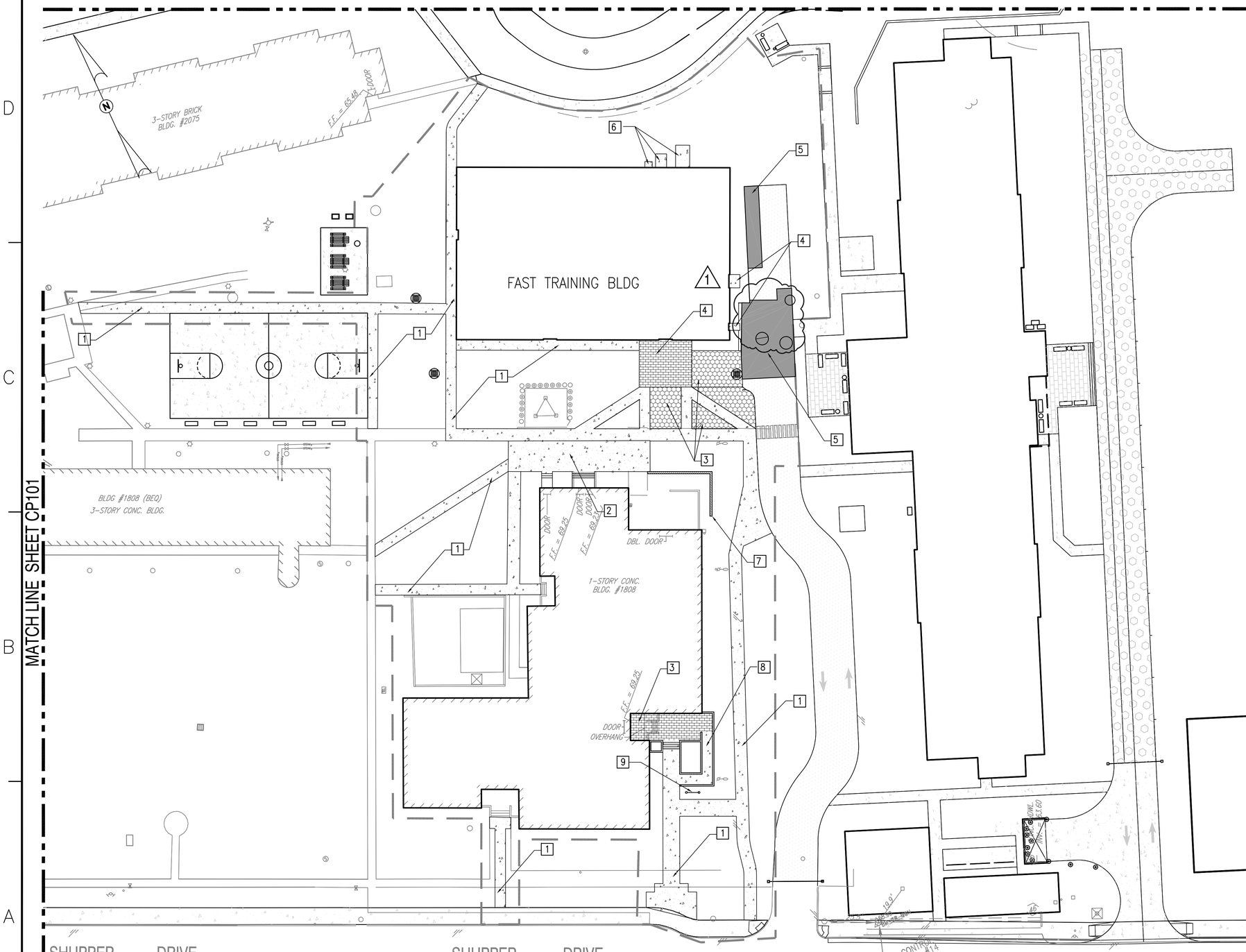

PAVING PLAN

SCALE: 1" = 25'

PLAN NORTH

GRAPHIC SCALE

0 25' 50'

1" = 25'

PAVING KEYNOTES (THIS SHEET)

1 CONCRETE SIDEWALK

2 CONCRETE PAVEMENT

3 BRICK PAVER

4 CONCRETE STOOP

5 UTILITY ASPHALT PAVEMENT PATCH

6 UTILITY CONCRETE PADS (10'-8" X 6'-8"), (6'-6" X 5'-3") AND (3'-6" X 2'-10")

7 SCREEN WALL (SEE LANDSCAPE ARCHITECTURAL DRAWING FOR DETAIL)

8 CONCRETE WALK RAMP WITH HANDRAIL (SEE STRUCTURAL DRAWING FOR WALK RAMP DETAIL AND SEE LANDSCAPE ARCHITECTURAL DRAWING FOR HANDRAIL DETAIL)

9 I.A.P. SIGN (SEE LANDSCAPE ARCHITECTURAL DRAWING FOR DETAIL)

KEY PLAN

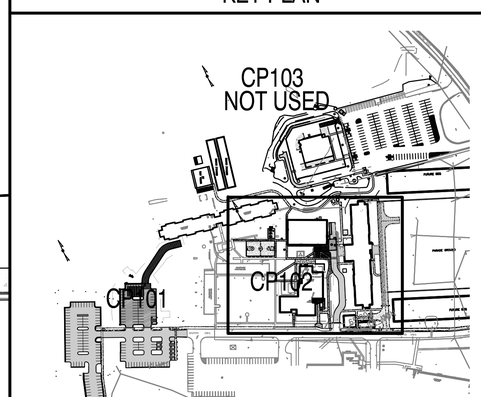

SYM	DESCRIPTION	DATE	APPR
1	REVISED UTIL. ASPHALT PAVEMENT PATCH AREA	03-31-15	

NAVFAC

SEAL

A/E INFO

APPROVED

FOR COMMANDER NAVFAC

ACTIVITY: LCDR W. PURCELL

SATISFACTORY TO DATE 27 OCT 2014

DES: LLP DRW: LLP CHK:

PM: PERRY

BRANCH MANAGER: BJL

DM: MCDONALD

FIRE PROTECTION

DEPARTMENT OF THE NAVY
NAVAL FACILITIES ENGINEERING COMMAND
HAMPTON ROADS IPT

NAVAL FACILITIES ENGINEERING COMMAND -MID-ATLANTIC
NAVAL STATION NORFOLK, VA

NAVAL WEAPONS STATION
YORKTOWN, VA

MCSFR FAST COMPANY TRAINING FACILITY

PAVING PLAN

SCALE: AS SHOWN

EPROJECT NO.: 1312141

CONSTR. CONTR. NO.

NAVFAC DRAWING NO. 12683472

SHEET 23 OF 196

CP102

DRAWFORM REVISION: 10 MARCH 2009

MATCH LINE SHEET CG103 (NOT USED)

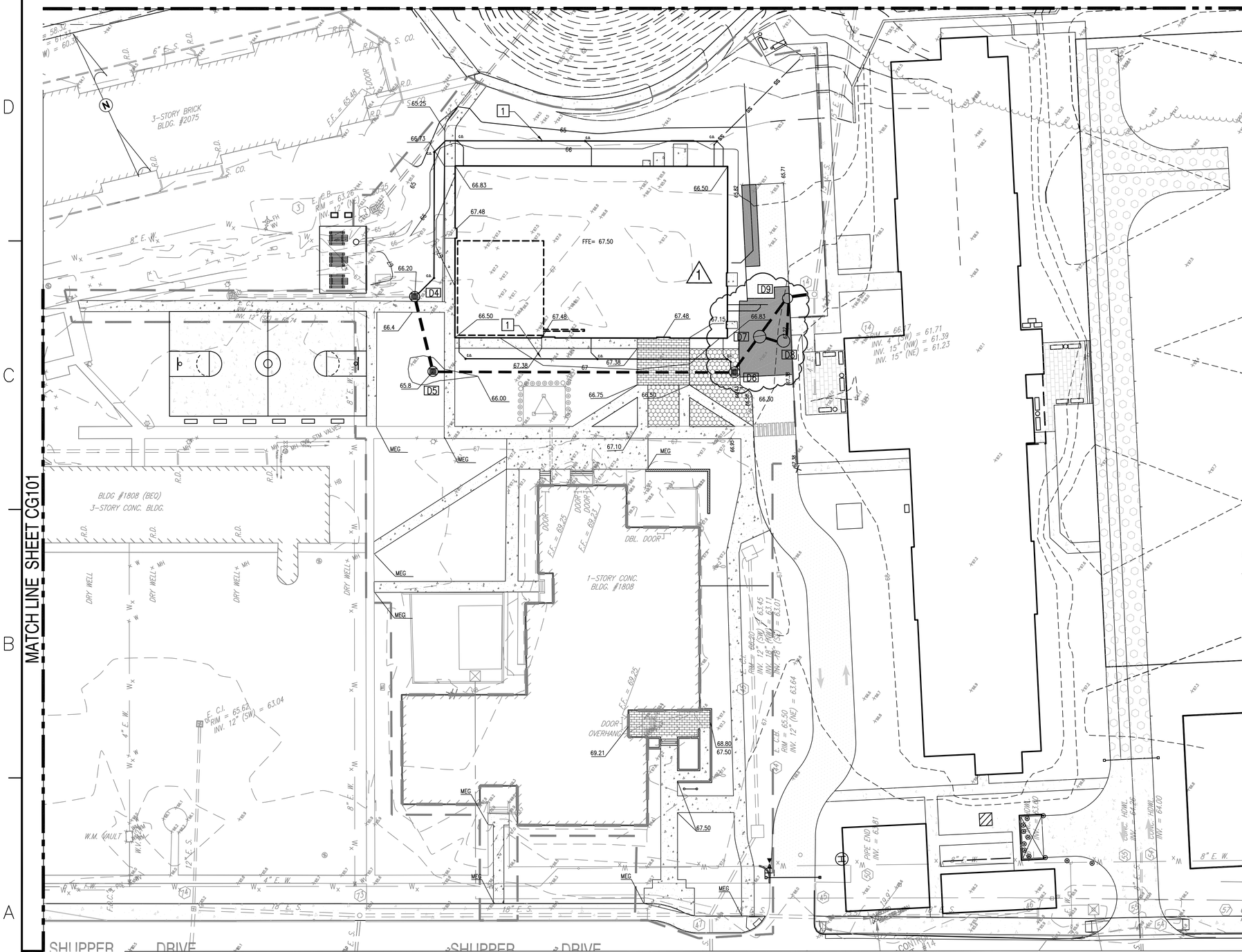

GRADING PLAN
SCALE: 1" = 25'

PLAN NORTH

GRAPHIC SCALE
0 25' 50'
1" = 25'

LAYOUT KEYNOTES

1 6" ROOF DRAIN @ 1.00% SLOPE

NEW STORM DRAINAGE STRUCTURE DATA

D4 GRATE DROP INLET
RIM= 66.2'
INV. OUT = 63.60'
NV. IN = 63.50
(FROM ROOF DRAIN AND UNDERDRAIN)

D4 TO D5
37 LF 15" RCP @0.5%

D5 GRATE DROP INLET
RIM = 65.80'
INV. IN = 63.30'
INV. OUT =63.20'

D5 TO D6
144 LF 15" RCP @0.5%

D6 GRATE DROP INLET
RIM = 66.30'
INV. IN = 62.50' (15" RCP)
INV. IN = 62.70 (6" PVC ROOFDRAIN)
INV. OUT =62.40'

D6 TO D7
21 LF 15" RCP @0.5%

D7 MODIFIED STD. MH BYPASS STRUCTURE (SEE DETAIL XX SHEET C-XXX)
RIM = 66.50' (±)
INV. IN = 62.30'
INV. OUT (S) =62.10'

D7 TO D9
22 LF 15" RCP @0.5%

D7 TO D8
12 LF 8" PVC @0.45%

D8 STORMWATER QUALITY TREATMENT UNIT (SEE NOTE 2)
RIM = 67.20' (±)
INV. IN = 62.05'
INV. OUT =61.65'

D8 TO D9
20 LF 8" PVC @0.45%

D9 STD. STORM MH
RIM = 67.00' (±)
INV. IN = 62.00'
INV. IN = 61.56'
NV. OUT =61.46

D9 TO EX. 14
12 LF 15" RCP @0.5%
@ INV. = 61.36

NOTES:

1. FINISHED ELEV. FOR UTILITY SLABS SHALL BE AT 67.15'.
2. PROVIDE A VIRGINIA BMP CLEARINGHOUSE APPROVED AND LISTED STORMWATER QUALITY TREATMENT UNIT THAT MEETS OR EXCEEDS PHOSPHOROUS REMOVAL RATE OF 50%. THIS UNIT SHALL BE SIZED TO TREAT NO LESS THAN 1.0 CFS.
3. INVERT ELEVATIONS MIGHT BE ADJUSTED TO MEET THE HEAD REQUIRED FOR STORMWATER QUALITY TREATMENT UNIT.
4. MAINTENANCE OF STORMWATER QUALITY TREATMENT UNIT SHALL BE IN ACCORDANCE TO THE MANUFACTURER'S RECOMMENDATION.

KEY PLAN

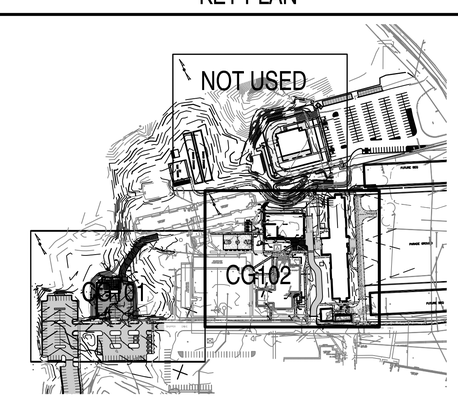

SYM	DESCRIPTION	DATE	APPR
1	REVISED STORM PIPE & STRUCTURE LAYOUT	03-31-15	

NAVFAC

SEAL

A/E INFO

APPROVED

FOR COMMANDER NAVFAC

ACTIVITY: LCDR W. PURCELL

SATISFACTORY TO DATE 27 OCT 2014

DES: LLP DRW: LLP CHK:

PM: PERRY

BRANCH MANAGER: BJL

DM: MCDONALD

FIRE PROTECTION

DEPARTMENT OF THE NAVY
NAVAL FACILITIES ENGINEERING COMMAND
HAMPTON ROADS IPT

NAVAL FACILITIES ENGINEERING COMMAND -MID-ATLANTIC
NAVAL STATION NORFOLK, VA

NAVAL WEAPONS STATION YORKTOWN, VA

MCSFR FAST COMPANY TRAINING FACILITY

GRADING PLAN

SCALE: AS SHOWN

EPROJECT NO.: 1312141

CONSTR. CONTR. NO.

NAVFAC DRAWING NO. 12683477

SHEET 28 OF 196

CG102

DRAWFORM REVISION: 10 MARCH 2009

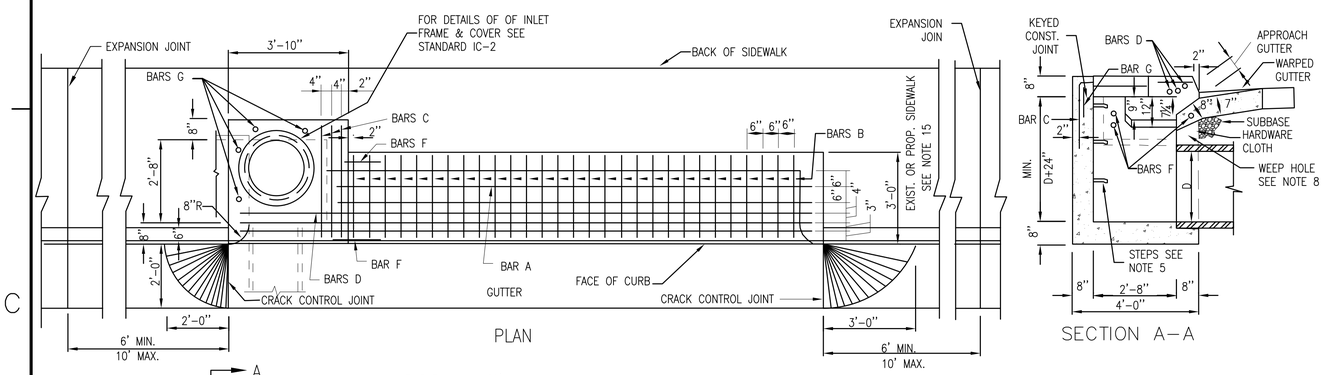

PLAN

SECTION A–A

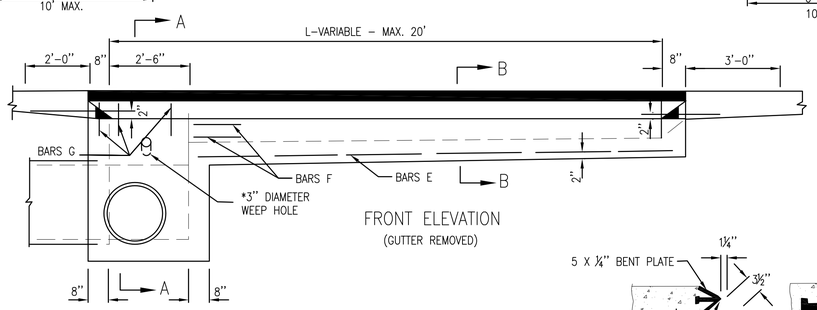

FRONT ELEVATION
(GUTTER REMOVED)

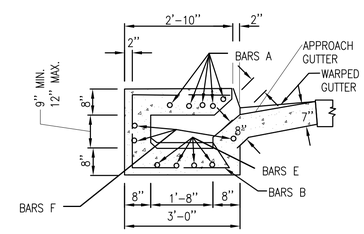

SECTION B–B

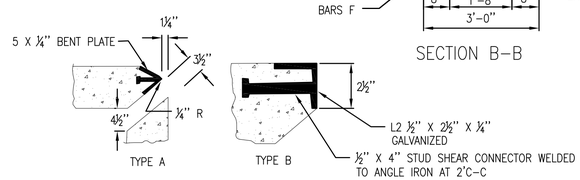

NOSE DETAILS

TYPE A A NOSE DETAIL SHALL BE USED WITH CG-3 & CG-7 STANDARDS.

TYPE B NOSE DETAIL SHALL BE USED WITH CG-2 STANDARDS.

GALVANIZED PLATE FOR TYPE A TO BE BENT ON AN ANGLE OF 68°30' CONNECTORS AND IS TO BE ANCHORED WITH ½" X 4" STUD SHEAR WELDED TO BENT PLATE AT 2' C-C.

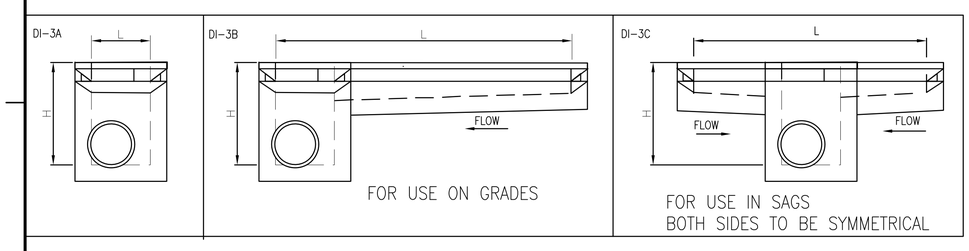

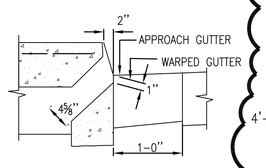

DETAIL WHEN USED ADJACENT TO CURB WITHOUT GUTTER

A2 STANDARD CURB DROP INLET

NOT TO SCALE

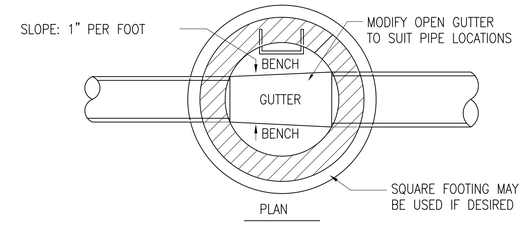

PLAN

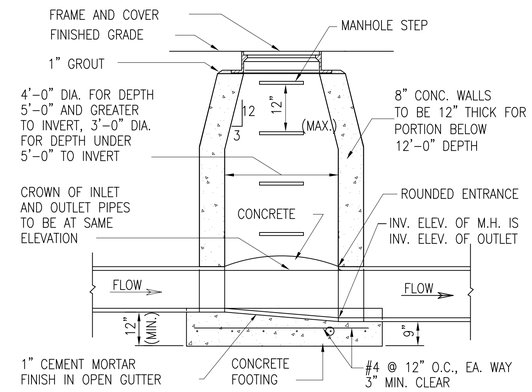

SECTION

C5 STD. STORM MANHOLE

NOT TO SCALE

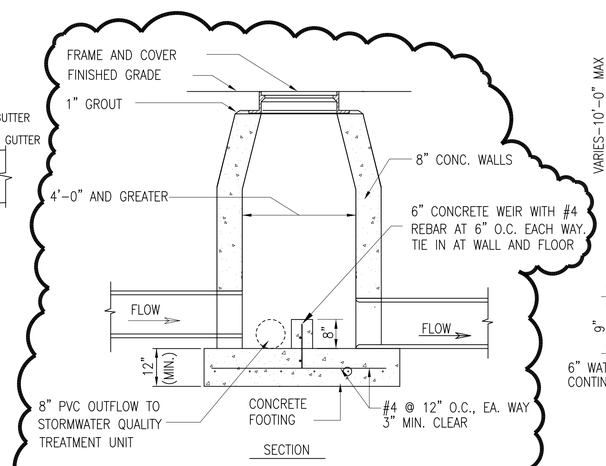

SECTION

A4 MODIFIED STD. STORM MANHOLE BYPASS STRUCTURE

NOT TO SCALE

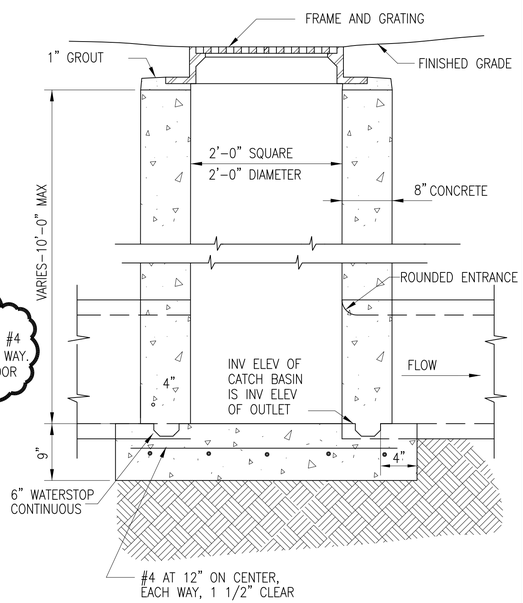

A5 GRATE DROP INLET

NOT TO SCALE

SYM	DESCRIPTION	DATE	APPR
1	ADD BYPASS STRUCTURE DETAIL	03-31-15	

NAVFAC

SEAL

A/E INFO

APPROVED

FOR COMMANDER NAVFAC

ACTIVITY

LCDR W. PURCELL

SATISFACTORY TO DATE 27 OCT 2014

DES LLP DRW LLP CHK

PM PERRY

BRANCH MANAGER BJL

DM MCDONALD

FIRE PROTECTION

DEPARTMENT OF THE NAVY
NAVAL FACILITIES ENGINEERING COMMAND
HAMPTON ROADS IPT

NAVAL FACILITIES ENGINEERING COMMAND -MID-ATLANTIC
NAVAL STATION NORFOLK, VA

NAVAL WEAPONS STATION YORKTOWN, VA

MCSFR FAST COMPANY TRAINING FACILITY

CIVIL DETAILS

SCALE: AS SHOWN

EPROJECT NO.: 1312141

CONSTR. CONTR. NO.

NAVFAC DRAWING NO. 12683482

SHEET 33 OF 196

C-502

DRAWFORM REVISION: 10 MARCH 2009

INTERIOR ELECTRICAL LEGEND

- 1. — GENERAL NOTE TAG – REFER TO "GENERAL NOTES THIS SHEET" FOR EACH SHEET
- 1 — SPECIAL NOTE TAG – REFER TO "SPECIAL NOTES" ON THIS SHEET.
- 1 — DEMOLITION NOTE TAG – REFER TO "DEMOLITION NOTES – THIS SHEET" FOR EACH SHEET
- 1 — NEW WORK NOTE TAG – REFER TO "NEW WORK NOTES – THIS SHEET" FOR EACH SHEET
- 1 — EXISTING FEEDER TAG – REFER TO "FEEDER SCHEDULE"
- 1 — NEW FEEDER TAG – REFER TO "FEEDER SCHEDULE"
- A — LIGHTING FIXTURE TYPE. SEE LIGHTING FIXTURE SCHEDULE.
- FLUORESCENT LIGHTING FIXTURE.
- FLUORESCENT LIGHTING FIXTURE WITH EMERGENCY BALLAST.
- HIGH INTENSITY DISCHARGE (HID) LIGHTING FIXTURE UON.
- RECESSED DOWNLIGHT FIXTURE. COMPACT FLUORESCENT
- WALL–MOUNTED LIGHTING FIXTURE.
- WALL–MOUNTED EXIT LIGHTING FIXTURE.
- EXIT LIGHTING FIXTURE, CEILING–MOUNTED. ARROW, WHEN USED, INDICATES DIRECTION.
- EMERGENCY, BATTERY POWERED LIGHTING FIXTURE.
- S — TOGGLE SWITCH, SINGLE POLE, UON
- S_3 — TOGGLE SWITCH, 3 WAY, SUBSCRIPT (3), UON
- S_4 — TOGGLE SWITCH, 4 WAY, SUBSCRIPT (4), UON
- S_D — TOGGLE SWITCH, DIMMER, SUBSCRIPT (D) DENOTES DIMMER SWITCH 600 WATTS, UON
- S_O — SWITCH, OCCUPANCY, SUBSCRIPT (O) DENOTES OCCUPANCY SENSOR WHEN USED, UON
- S_a — SWITCH SUBSCRIPT (a) OR (b) WHEN USED DENOTES FIXTURES CONTROLLED, UON
- S_{WP} — SWITCH SUBSCRIPT DENOTES WAETHER PROOF
- IR — OCCUPANCY SENSOR; SUBSCRIPT (IR) = CEILING MOUNTED SENSOR USING INFRA–RED TECHNOLOGY,
- US — OCCUPANCY SENSOR; SUBSCRIPT (US) = CEILING MOUNTED SENSOR USING ULTRA SONIC TECHNOLOGY,
- DT — OCCUPANCY SENSOR; SUBSCRIPT (DT) = CEILING MOUNTED SENSOR USING DUAL TECHNOLOGY.
- T — THERMOSTAT
- ELECTRICAL PANELBOARD (208/120V).
- ELECTRICAL PANELBOARD (480/277V).
- J — JUNCTION BOX.
- M 5 — MOTOR CONNECTION, HP AS INDICATED.
- 3P 30/20 — DISCONNECT SWITCH. IN NEMA 3R ENCL. UON. 3P = # OF POLES, 30 = SWITCH RATING 20 = FUSE RATING (NF INDICATES NON–FUSIBLE).
- DUPLEX CONVENIENCE RECEPTACLE. 20A., 125V. MOUNT 18" AFF UON. GFI = GROUND FAULT PROTECTION. CTR DENOTES COUNTER, WP DENOTES GFI WITH WATER PROOF ENCLOSURE, F DENOTES FURNITURE CONNECTION
- TV — DUPLEX CONVENIENCE RECEPTACLE. 20A., 125V. MOUNT 18" BELOW FINISHED CEILING UON. TV – TELEVISION; CAM – CAMERA.
- QUADRUPLEX CONVENIENCE RECEPTACLE. 20A., 125V. MOUNT 18" AFF UON. IG = ISOLATED GROUND. SEE .
- SINGLE RECEPTACLE. 20A., 250V, NEMA CONFIGURATION AS INDICATED. MOUNT 18" AFF UON.
- SPECIAL PURPOSE OUTLET. 30 AMP 2 POLE THREE WIRE 208 VAC UNLESS OTHERWISE NOTED
- P–D — POWER/DATA POLE CEILING–FLOOR MOUNTED
- E — EQUIPMENT CONNECTION AS NOTED.
- F — FURNITURE CONNECTION AS NOTED.
- S_M — MOTOR RATED SWITCH OR MANUAL MOTOR STARTER WITH OVERLOADS.
- MOTOR CONTROLLER
- A–1,2,3 — HOMERUNS TO PANEL. PANEL & CIRCUIT DESIGNATIONS AS INDICATED.
- OR — BRANCH CIRCUIT OR FEEDER WIRING IN CONDUIT. NO TICK MARKS INDICATE 2–#12 CONDUCTORS & 1–#12 GND. IN 1/2" CONDUIT UON. TICK MARKS, WHEN SHOWN, INDICATE NUMBER OF #12 CONDUCTORS IF OTHER THAN THREE ; ( ) INDICATES GROUND. CONDUIT LARGER THAN 1/2" & WIRE LARGER THAN #12 SHALL BE AS INDICATED.
- INDICATES A CONDUIT RUN CONCEALED IN CEILING, WALL, FLOOR, OR ABOVE SUSPENDED CEILING UON.
- T/F — DRY TYPE TRANSFORMER.
- TELECOMMUNICATIONS OUTLET, MOUNT 18" BFC UON. SIPRNET
- TELECOMMUNICATIONS OUTLET, MOUNT 18" BFC UON. TWO DATA, ONE PHONE, ONE BLANK. F = FURNITURE
- TV — TV = TELEVISION OUTLET
- TELEPHONE
- TELEPHONE TERMINAL BACKBOARD OR PANEL.
- UNCLASSIFIED TELECOMMUNICATIONS CABLE SUPPORT SYSTEM
- S — INTERCOMM SPEAKER, WALL MOUNT, 18" BFC UON.
- S — INTERCOMM SPEAKER, CEILING MOUNT.
- DR — ELECTRIC DOOR STRIKE (DR)
- BMS — DPDT DOOR BALANCED MAGNETIC SWITCH (BS)
- R — EXIT MOTION SENSOR (R)
- CK — STANDARD PROXIMITY CARD READER AND KEYPAD (CK)
- CR — STANDARD PROXIMITY CARD READER (CR)
- KP — STANDARD KEYPAD (KP)
- MB — NEMA 1 ENCLOSURE / MAKEUP BOX (MB)
- MD — MOTION DETECTOR (MD)
- CLOSED CIRCUIT TV (CCTV) CAMERA. PTZ = PAN/TILT/ZOOM CAMERA.
- DUAL LENS CLOSED CIRCUIT TV (CCTV) CAMERA. FIXED MOUNT .

EXTERIOR ELECTRICAL LEGEND

- UGP — NEW UNDERGROUND 13,2 kV UTILITY LINE
- EXISTING ELECTRICAL CIRCUIT TO BE REMOVED.
- 13.2 — OVERHEAD UTILITY LINE
- X-13.2 X- — EXISTING OVERHEAD 13.2 kV UTILITY LINE TO BE REMOVED
- X-UGP X- — EXISTING UNDERGROUND 13.2 kV UTILITY LINE TO BE REMOVED
- UT — UNDERGROUND TELECOMM LINE.
- X-UGE X- — EXISTING UNDERGROUND ELECTRIC LINE TO BE REMOVED
- UGE — EXISTING UNDERGROUND ELECTRIC LINE TO BE REMAIN
- 1 — EXISTING AREA/STREET LIGHTING FIXTURE/POLE
- EXISTING AREA/STREET LIGHTING POLE W/NEW LUMINAIRE
- AREA/STREET LIGHTING POLE WITH LUMINAIRE
- GUARDPOST, QUANTITY AS INDICATED. SEE DETAIL ON SHEET E–701.
- POWER POLE (HEIGHT AND CLASS AS INDICATED).
- EXISTING POWER POLE (HEIGHT AND CLASS AS INDICATED).
- REMOVE POWER POLE (HEIGHT AND CLASS AS INDICATED).
- MANHOLE/HANDHOLE, TYPE AS NOTED
- EXISTING MANHOLE/HANDHOLE, TYPE AS NOTED
- PADMOUNT TRANSFORMER. SIZE AS INDICATED. UNFILLED LOWER RECTANGLE INDICATES FRONT.
- PADMOUNT TRANSFORMER. EXISTING. SIZE AS INDICATED. UNFILLED LOWER RECTANGLE INDICATES FRONT.
- PADMOUNT SF6 SWITCH. 15KV, 4WAY, 600 AMP. VFI PROTECTED SWITCHWAYS AS INDICATED.
- EXISTING TELECOMMUNICATIONS PEDESTAL.
- NEW TELECOMMUNICATIONS PEDESTAL.
- 25 — EXISTING POLE MOUNTED TRANSFORMER. KVA AS INDICATED.
- 2 — DOWN GUY AND ANCHOR – QUANTITY AS INDICATED IF OTHER THAN ONE.
- 2 X A — DUCTBANK SECTION LOOKING IN DIRECTION OF ARROWS. (SEE NOTE 2)
  - SPARE DUCT. (TYPICAL)
  - HEAVY LINE INDICATES BOTTOM OF DUCT.
  - EXISTING CABLE DESIGNATION (TYPICAL) DESCRIPTION PER CABLE SCHEDULE. (SEE NOTE THREE)
  - OCCUPIED DUCT. UNIDENTIFIED CABLE
  - NEW CABLE DESIGNATION (TYPICAL) DESCRIPTION PER CABLE SCHEDULE. (SEE NOTE THREE)
- MG — LIGHTNING PROTECTION MAIN GROUND CONDUCTOR
- D — LIGHTNING PROTECTION DOWN CONDUCTOR
- LIGHTNING PROTECTION AIR TERMINAL
- T — GROUNDING TEST WELL
- LIGHTNING PROTECTION WIRE JUNCTIONL

GENERAL NOTES

1. ELECTRICAL EQUIPMENT SHALL BE IDENTIFIED AND LABELED. ALL FEEDERS/CIRCUITS SHALL BE IDENTIFIED AT EACH END OF THE WIRE AND AT EVERY SPLICE OR JUNCTION/PULL BOX.
2. DRAWINGS ARE BASED ON EXISTING BUILDING PLANS AND FIELD INVESTIGATIONS. CONTRACTOR SHALL VISIT THE EXISTING BUILDING AND ACQUAINT HIMSELF/HERSELF WITH THE EXISTING FIELD CONDITIONS. CONTRACTOR SHALL EXAMINE ALL DRAWINGS TO AVOID CONFLICT.
3. ARC FLASH TAGS SHALL BE USED ON ALL EQUIPMENT AND SHALL BE SIMILAR TO DETAIL AF–1, SHEET E–701.

ABBREVIATIONS

1/C	ONE CONDUCTOR
AFF	ABOVE FINISHED FLOOR
AFG	ABOVE FINISHED GRADE
ARCI	ARC–FAULT CIRCUIT INTERRUPTER
ARF	ABOVE RAISED FLOOR
BFC	BELOW FINISHED CEILING
BKR	BREAKER
C	CONDUIT
CAM	CAMERA
CATV	COMMUNITY ANTENNA TV (CABLE TV)
CB	CIRCUIT BREAKER
CKT	CIRCUIT
CNTL	CONTROL
CNTR	CONTACTOR
CONT.	CONTINUED
DACT	FIRE ALARM TRANSMITTER
DWG	DRAWING
EA	EACH
EC	EMPTY CONDUIT
ELEC	ELECTRICAL
EMT	ELECTRICAL METALLIC TUBING
ESS	ELECTRONIC SECURITY SYSTEM
ENCL	ENCLOSURE
EQUIP	EQUIPMENT
EWC	ELECTRIC WATER COOLER
EWH	ELECTRIC WATER HEATER
EUH	ELECTRIC UNIT HEATER
EXIST	EXISTING
EXP	EXPLOSION PROOF EQUIPMENT
EXT	EXTERIOR
FAMN	FIRE ALARM/MASS NOTIFICATION PANEL
FCU	FAN COIL UNIT
FT	FEET
GFCI	GOVERNMENT FURNISHED CONTRACTOR INSTALLED
GFE	GOVERNMENT FURNISHED EQUIPMENT
GFGI	GOVERNMENT FURNISHED GOVERNMENT INSTALLED
GFI	GROUND FAULT CIRCUIT INTERRUPTER
GND	GROUND
GUH	GAS UNIT HEATER
HGT	HEIGHT
HH	HANDHOLE
HID	HIGH INTENSITY DISCHARGE
HPOU	HEAT PUMP OUTSIDE UNIT
HRU	HEAT RECOVERY UNIT
HUB	COMPUTER DISTRIBUTION HUB
LP1	LIGHTING PANEL 1
LTS	LIGHTS
MCB	MAIN CIRCUIT BREAKER
MDP	MAIN DISTRIBUTION PANEL
MECH	MECHANICAL
MH	MANHOLE
MLO	MAIN LUGS ONLY
MP1	MECHANICAL PANEL 1
MTD	MOUNTED
MTG HT	MOUNTING HEIGHT
NEC	NATIONAL ELECTRICAL CODE
NIC	NOT IN CONTRACT
NL	NIGHT LIGHT
NTS	NOT TO SCALE
OBI	OUTLET BASE INFEED
ORD	OVERHEAD ROLLUP DOOR
PNL	PANEL
PNLBD	PANELBOARD
PP1	POWER PANEL 1
PT	PHYSICAL THERAPY
PTR	PRINTER
PVC	POLYVINYL CHLORIDE CONDUIT
QU	QUANTITY
REC	RECEPTACLE
REQ'D	REQUIRED
RGS	RIGID GALVANIZED STEEL
RM	ROOM
SHT	SHEET
SUB	SUBSTATION
T	TELEPHONE
TP1	TELECOMMUNICATIONS PANEL 1
TV	TELEVISION
TYP	TYPICAL
UG	UNDERGROUND
UON	UNLESS OTHERWISE NOTED
VRF	VARIABLE REFRIGERANT UNIT
VEF	VEHICLE EXHAUST FAN
W	WIRE
WP	WEATHERPROOF
WR	WASH RACK PANEL
WW	WIREWAY (TROUGH)
X	IN SCHEDULES, ITEM NOT APPLICABLE
XFMR	TRANSFORMER

SYM	DESCRIPTION	DATE	APPR
1	REVISION 1 AMENDMENT 5	4/2/15	

NAVFAC

SEAL

A/E INFO

APPROVED

FOR COMMANDER NAVFAC

ACTIVITY: LCDR W. PURCELL

SATISFACTORY TO DATE: 27 OCT 2014

DES: WED DRW: WED CHK: KDL

PM: PERRY

BRANCH MANAGER:

DM: MCDONALD

FIRE PROTECTION

DEPARTMENT OF THE NAVY
NAVAL FACILITIES ENGINEERING COMMAND
HAMPTON ROADS IPT
NAVAL FACILITIES ENGINEERING COMMAND -MID-ATLANTIC
NAVAL STATION NORFOLK, VA
NAVAL WEAPONS STATION YORKTOWN, VA
MCSFR FAST COMPANY TRAINING FACILITY
LEGEND, ABBREVIATIONS & GENERAL NOTES

SCALE: AS NOTED

EPROJECT NO.: 1312141

CONSTR. CONTR. NO.

NAVFAC DRAWING NO. 12683559

SHEET 110 OF 196

E-001

DRAWFORM REVISION: 10 MARCH 2009

LIGHTING FIXTURE SCHEDULE – BUILDING 1808

FIXTURE SYMBOL	SKETCH NO. & TYPE	NO. & TYPE OF LAMPS	VOLTS	WATTS	MOUNTING	NOTES
A B	NL–8	2–F32/T8	277	60	RECESSED	3 6
C D	NL–9	2–F32/T8	277	60	RECESSED	6
E F	NL–27A				SURFACE MOUNT	6
G H	NL–38	13W CFL	120	50	RECESSED	4
I	NL–21, TYPE A	1F32T8	120	50	WALL MTD	6
J K	NL–11	2–F32/T8	277	60	SURFACE MOUNT	6
L	NL–65	2–24W HAL	277	30	WALL MOUNT 8' AFF	
M	NL–13	2–F32/T8	277	60	PENDANT MT. W/1/2" CONDUIT 9' AFF	2 6
N	XL–17	LED	277	74	EXTERIOR WALL MOUNT 15' AFF	4
P	XL–01	LED	277	100	POLE MOUNT	
X	NL–64	LED	277	25	CEILING MOUNT	5 6

1 PROVIDE FIXTURE SUITABLE FOR PENDANT MOUNTING.

2 PENDANT MOUNT FIXTURE 9' AFF TO BOTTOM OF FIXTURE.

3 PROVIDE 2 BALLASTS FOR MULTILEVEL SWITCHING. CONNECT EACH BALLAST ON A SEPARATE CIRCUIT FOR ROOMS AS INDICATED. CONTROL INBOARD LAMPS WITH SWITCH CLOSEST TO DOOR FRAME AND OUTBOARD LAMPS WITH SWITCH FARTHEST FROM THE DOOR FRAME UON.

4 PROVIDE LABEL INDICATING FIXTURE IS UL LISTED FOR DAMP LOCATIONS.

5 PROVIDE DIRECTION ARROWS, NUMBER AS INDICATED.

6 PROVIDE MULTI–TAP BALLAST. CONNECT TO VOLTAGE AS INDICATED IN LIGHTING FIXTURE SCHEDULE, THIS SHEET.

LIGHTING FIXTURE SCHEDULE BLDG 1808

NOT TO SCALE

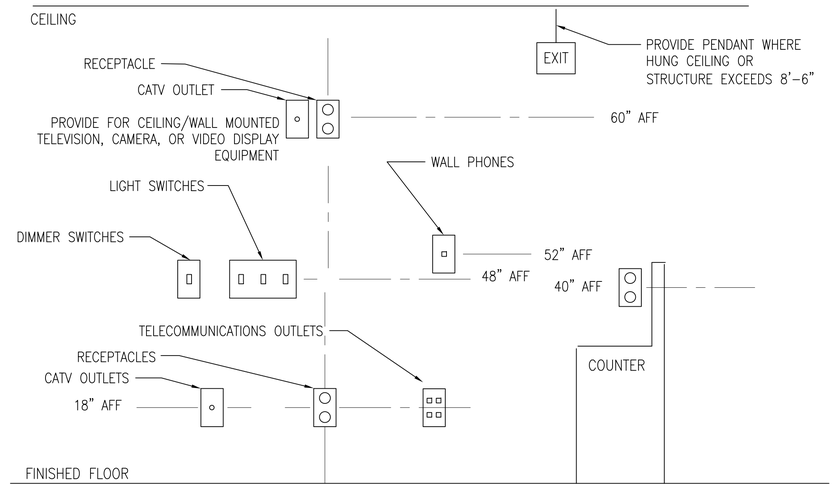

NOTE: INSTALL DEVICES ON ONE COMMON VERTICAL CENTERLINE.

RECEPTACLE/ SWITCH MOUNTING HEIGHT DIAGRAM

NOT TO SCALE

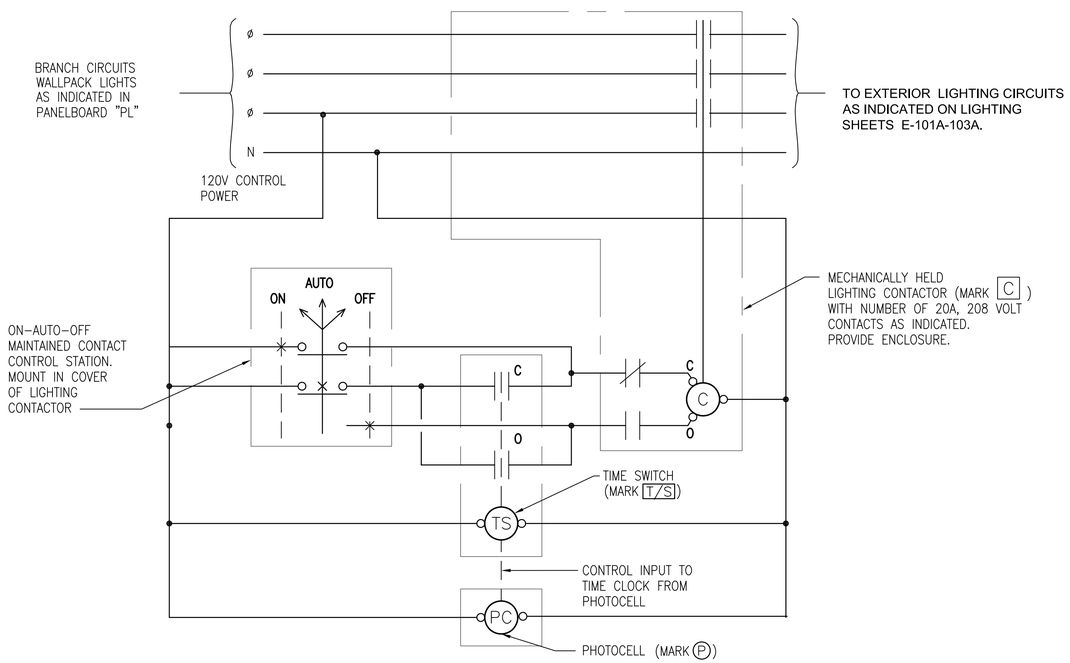

WALLPACK LIGHTING CONTROL WIRING DIAGRAM

NOT TO SCALE

LIGHTING FIXTURE SCHEDULE – A.I.F. BUILDING

FIXTURE SYMBOL	SKETCH NO. & TYPE	NO. & TYPE OF LAMPS	VOLTS	WATTS	MOUNTING	NOTES
A B	NL–8	2–F32/T8	277	60	RECESSED	3 6
C D	NL–9	2–F32/T8	277	60	RECESSED	6
G H	NL–38	13W CFL	277	50	RECESSED	4
I	NL–21, TYPE A	1F32T8	277	50	WALL MTD	6
K	NL–11	2–F32/T8	277	60	SURFACE MOUNT	6
L	NL–65	2–24W HAL	277	30	WALL MOUNT 8' AFF	
M	NL–13	2–F32/T8	277	60	PENDANT MT. W/1/2" CONDUIT 9' AFF	2 6
N	XL–17	LED	277	74	EXTERIOR WALL MOUNT 15' AFF	4
X	NL–64	LED	277	12	CEILING MOUNT	5 6

1 PROVIDE FIXTURE SUITABLE FOR PENDANT MOUNTING.

2 PENDANT MOUNT FIXTURE 9' AFF TO BOTTOM OF FIXTURE.

3 PROVIDE 2 BALLASTS FOR MULTILEVEL SWITCHING. CONNECT EACH BALLAST ON A SEPARATE CIRCUIT FOR ROOMS AS INDICATED. CONTROL INBOARD LAMPS WITH SWITCH CLOSEST TO DOOR FRAME AND OUTBOARD LAMPS WITH SWITCH FARTHEST FROM THE DOOR FRAME UON.

4 PROVIDE LABEL INDICATING FIXTURE IS UL LISTED FOR DAMP LOCATIONS.

5 PROVIDE DIRECTION ARROWS, NUMBER AS INDICATED.

6 PROVIDE MULTI–TAP BALLAST. CONNECT TO VOLTAGE AS INDICATED IN LIGHTING FIXTURE SCHEDULE, THIS SHEET.

LIGHTING FIXTURE SCHEDULE A.I.F. BLDG

NOT TO SCALE

SYM	DESCRIPTION	DATE	APPR
1	AMENDMENT 0005	4–3–15	
1	REVISION 1 AMENDMENT 5	4/2/15	

SEAL

A/E INFO

APPROVED

FOR COMMANDER NAVFAC

ACTIVITY: LCDR W. PURCELL

SATISFACTORY TO DATE 27 OCT 2014

DES WED DRW WED CHK KDL

PM PERRY

BRANCH MANAGER

DM MCDONALD

FIRE PROTECTION

DEPARTMENT OF THE NAVY
NAVAL FACILITIES ENGINEERING COMMAND
NAVAL FACILITIES ENGINEERING COMMAND -MID-ATLANTIC
HAMPTON ROADS IPT
NAVAL WEAPONS STATION
NAVAL STATION NORFOLK, VA
YORKTOWN, VA

MCSFR FAST COMPANY TRAINING FACILITY

LIGHTING DETAILS

SCALE: AS NOTED

EPROJECT NO.: 1312141

CONSTR. CONTR. NO.

NAVFAC DRAWING NO. 12683580

SHEET 131 OF 196

E-502

DRAWFORM REVISION: 10 MARCH 2009

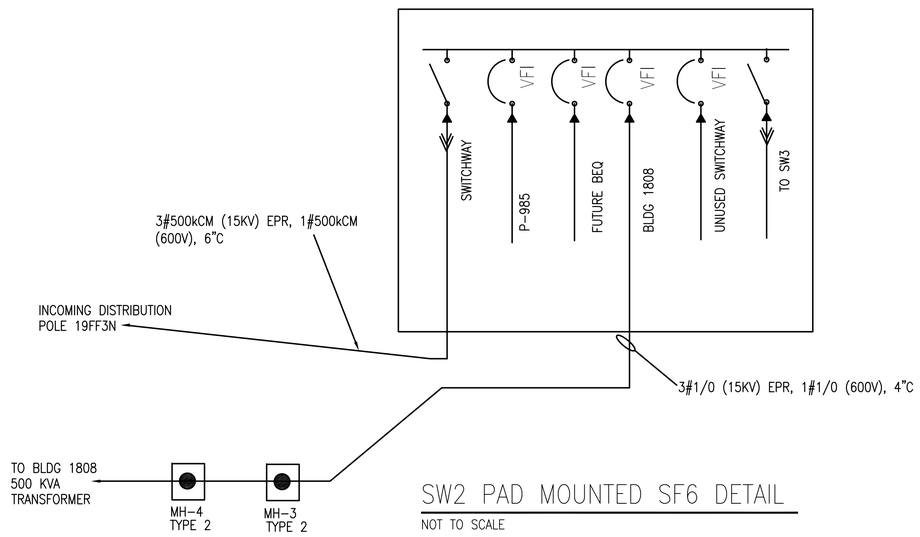

SW2 PAD MOUNTED SF6 DETAIL

NOT TO SCALE

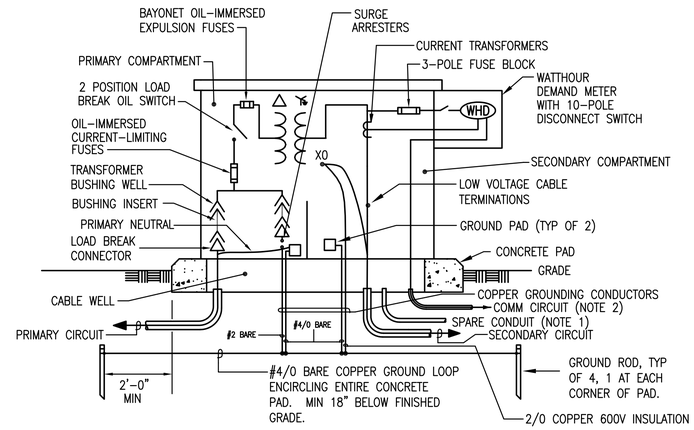

NOTE 1: PROVIDE ONE 1-INCH SPARE CONDUIT STUBBED-OUT FIVE FEET FROM PAD. COORDINATE WITH ACTIVITY FOR ADDITIONAL METERING INPUT (GAS, STEAM OR WATER SYSTEMS).

NOTE 2: PROVIDE THE COMM CIRCUIT TO THE MECHANICAL/ELECTRICAL EQUIPMENT ROOM. COORDINATE WITH ACTIVITY.

PAD-MOUNTED TRANSFORMER DETAIL

NOT TO SCALE

[MULTI-GROUNDED PRIMARY SYSTEM (DELTA-WYE) - WITH SURGE ARRESTERS]

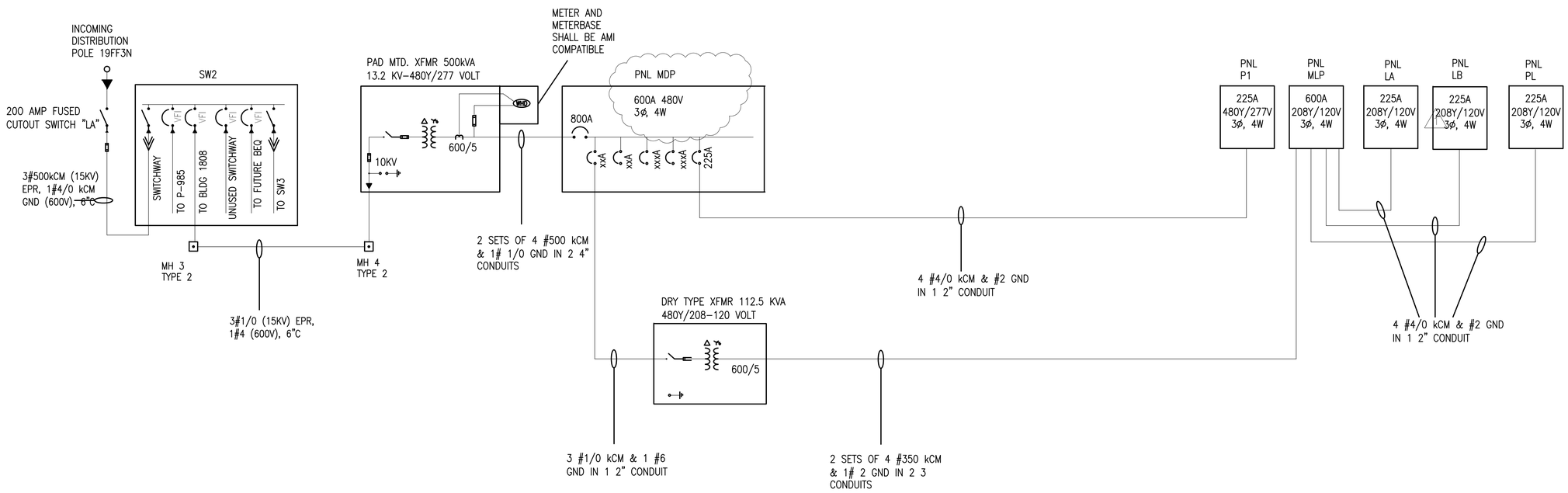

PARTIAL ONE-LINE/RISER DIAGRAM

NOT TO SCALE

SYM	DESCRIPTION	DATE	APPR
1	REVISION 1 AMENDMENT 5	4/2/15	

NAVFAC

SEAL

A/E INFO

APPROVED

FOR COMMANDER NAVFAC

ACTIVITY: LCDR W. PURCELL

SATISFACTORY TO DATE 27 OCT 2014

DES WED DRW WED CHK KDL

PM PERRY

BRANCH MANAGER

DM MCDONALD

FIRE PROTECTION

DEPARTMENT OF THE NAVY
NAVAL FACILITIES ENGINEERING COMMAND
HAMPTON ROADS PT
NAVAL FACILITIES ENGINEERING COMMAND -MID-ATLANTIC
NAVAL STATION NORFOLK, VA
NAVAL WEAPONS STATION YORKTOWN, VA

MCSFR FAST COMPANY TRAINING FACILITY

POWER RISER DIAGRAM AND DETAILS

SCALE: AS NOTED

EPROJECT NO.: 1312141

CONSTR. CONTR. NO.

NAVFAC DRAWING NO. 12683581

SHEET 132 OF 196

E-601

DRAWFORM REVISION: 10 MARCH 2009

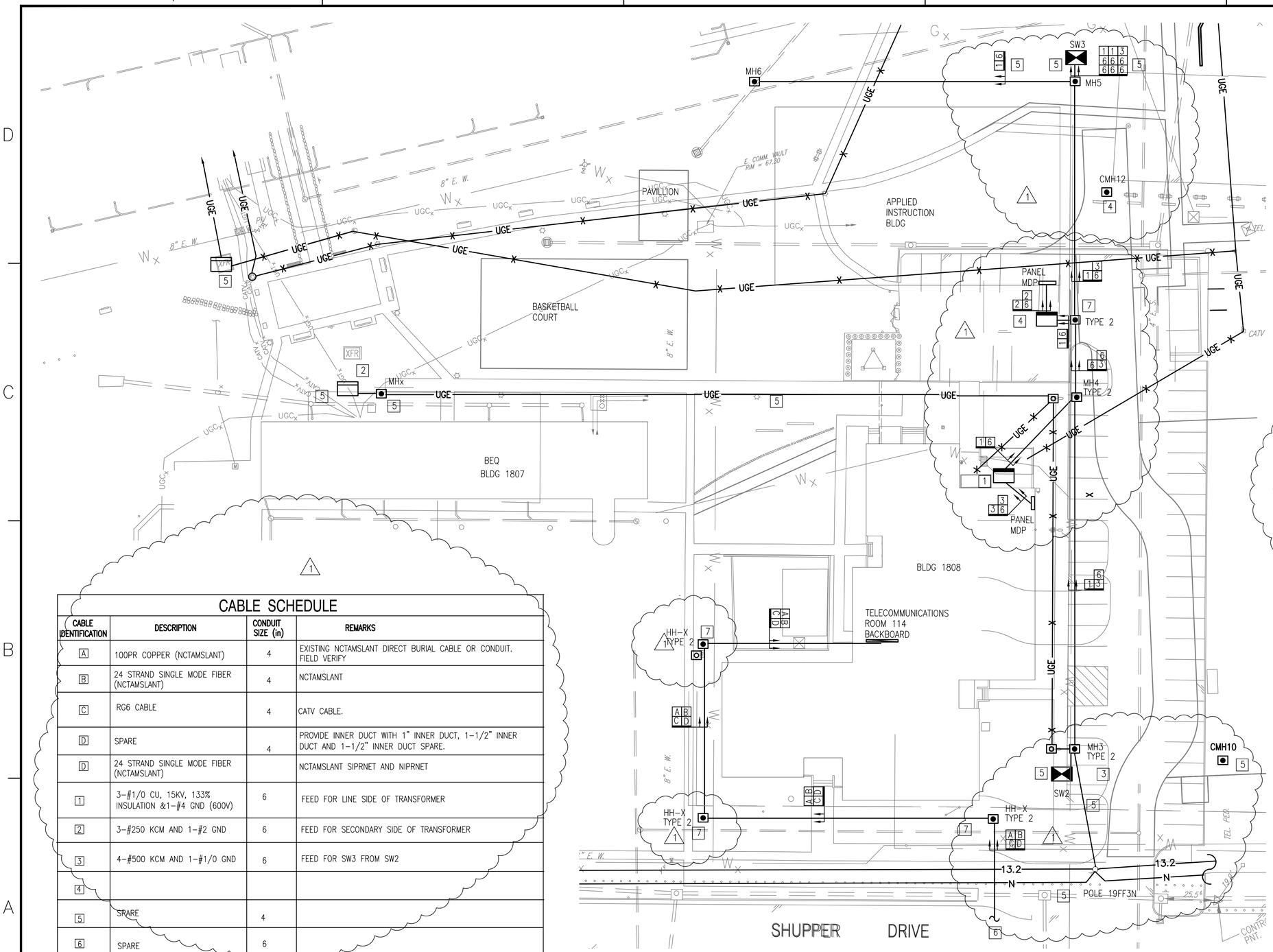

CABLE SCHEDULE

CABLE IDENTIFICATION	DESCRIPTION	CONDUIT SIZE (in)	REMARKS
A	100PR COPPER (NCTAMSLANT)	4	EXISTING NCTAMSLANT DIRECT BURIAL CABLE OR CONDUIT. FIELD VERIFY
B	24 STRAND SINGLE MODE FIBER (NCTAMSLANT)	4	NCTAMSLANT
C	RG6 CABLE	4	CATV CABLE.
D	SPARE	4	PROVIDE INNER DUCT WITH 1" INNER DUCT, 1-1/2" INNER DUCT AND 1-1/2" INNER DUCT SPARE.
D	24 STRAND SINGLE MODE FIBER (NCTAMSLANT)		NCTAMSLANT SIPRNET AND NIPRNET
1	3-#1/0 CU, 15KV, 133% INSULATION &1-#4 GND (600V)	6	FEED FOR LINE SIDE OF TRANSFORMER
2	3-#250 KCM AND 1-#2 GND	6	FEED FOR SECONDARY SIDE OF TRANSFORMER
3	4-#500 KCM AND 1-#1/0 GND	6	FEED FOR SW3 FROM SW2
4			
5	SPARE	4	
6	SPARE	6	

BLDG 1808 ELECTRICAL SITE PLAN

SCALE: 1" =30'

GENERAL SHEET NOTES

1. ALL WORK INDICATED IS NEW WORK UNLESS SPECIFICALLY INDICATED OTHERWISE.
2. ALL ITEMS INDICATED SHALL BE NEW AND PROVIDED BY THE CONTRACTOR UNLESS SPECIFICALLY NOTED AS EXISTING OR AS PROVIDED BY THE GOVERNMENT.

NEW WORK KEYNOTES

1. PROVIDE 500kVA 13.2 kV 480/277V THREE PHASE PAD-MOUNTED TRANSFORMER.
2. EXISTING 225kVA 13.2 kV 480/277V THREE PHASE PAD-MOUNTED TRANSFORMER.
3. EXISTING SIX WAY SF-6 PAD-MOUNTED SWITCH.
4. PROVIDE 300kVA 13.2 kV 480/277V THREE PHASE PAD-MOUNTED TRANSFORMER
5. NOT IN SCOPE OF THIS PROJECT. PROVIDED BY OTHER NAVFAC PROJECTS.
6. PROVIDED FROM BUILDING 703.
7. MANHOLE AND HANDHOLE NUMBERS TO BE SUPPLIED BY ACTIVITY AT A LATER DATE. SEE DRAWING E-703 FOR TYPE PLATES>

GRAPHIC SCALE

1" = 30' 0 15' 30' 60'

SYM	DESCRIPTION	DATE	APPR
1	REVISION 1 AMENDMENT 5	4/2/15	

SEAL

A/E INFO

APPROVED

FOR COMMANDER NAVFAC

ACTIVITY

LCDR W. PURCELL

SATISFACTORY TO DATE 27 OCT 2014

DES DRW CHK

PM PERRY

BRANCH MANAGER

DM MCDONALD

FIRE PROTECTION

DEPARTMENT OF THE NAVY
NAVAL FACILITIES ENGINEERING COMMAND
NAVAL FACILITIES ENGINEERING COMMAND -MID-ATLANTIC
NAVAL STATION NORFOLK, VA
HAMPTON ROADS IPT
NAVAL WEAPONS STATION YORKTOWN, VA
MCSFR FAST COMPANY TRAINING FACILITY
ELECTRICAL SITE PLAN

SCALE: AS NOTED

EPROJECT NO.: 1312141

CONSTR. CONTR. NO.

NAVFAC DRAWING NO. 12683562

SHEET 113 OF 196

ES101

DRAWFORM REVISION: 10 MARCH 2009

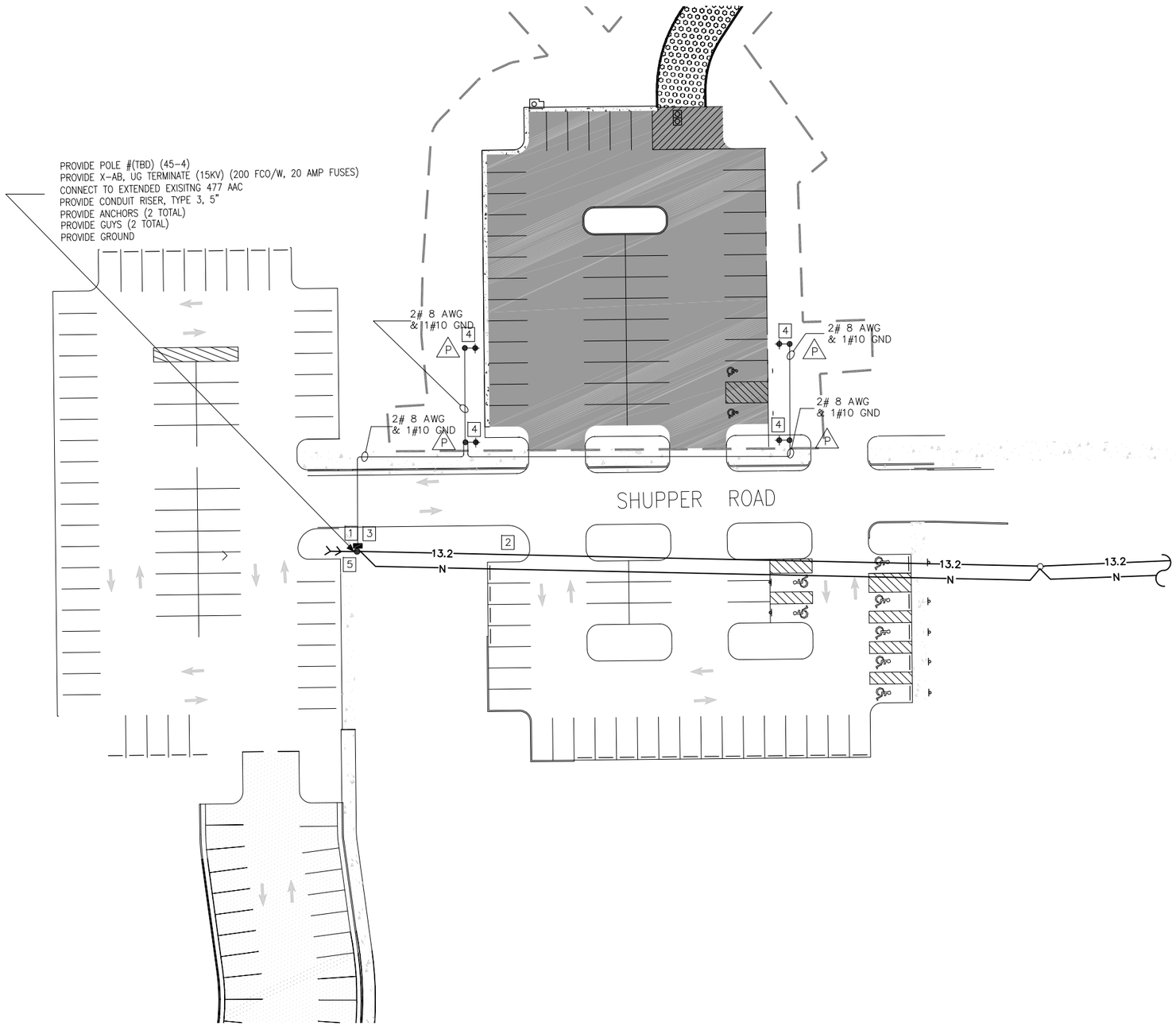

BLDG 1808 PARKING LOT LIGHTING PLAN

SCALE: 1" = 25'

PLAN NORTH

GENERAL SHEET NOTES

1. ALL WORK INDICATED IS NEW WORK UNLESS SPECIFICALLY INDICATED OTHERWISE.
2. ALL ITEMS INDICATED SHALL BE NEW AND PROVIDED BY THE CONTRACTOR UNLESS SPECIFICALLY NOTED AS EXISTING OR AS PROVIDED BY THE GOVERNMENT.

NEW WORK KEYNOTES

1. PROVIDE NEW POLE WITH 150 kVA THREE PHASE 13.2 kV /480/277Y VOlts TRANSFORMERS AND SWITCHGEAR AS INDICATED.
2. PROVIDE OVERHEAD LINE TO POLE.
3. PROVIDE 200 AMP 480/277 VOLT THREE PHASE NEMA 3R PANEL.
4. PROVIDE LED LIGHTS ON 30' POLES.
5. RISER AND FUSED CUTOUT ASSEMBLY SHALL BE INSTALLED ON THE NORTH SIDE OF POLE NEW POLE #(TBD). POWER SHALL BE SUPPLIED FROM CROSS-ARM PARALLEL TO SHUPPER ROAD. CUT-OUT ASSEMBLY SHALL BE INSTALLED BELOW NEW DISTRIBUTION LINES WITHIN NESC C2 2012 GUIDLINES. REFER TO DRAWING E-703, PLATE OH-31 FOR INSTALLATION DETAIILS. PLATE OH-31 DETAIL IS FOR CUT-OUT AND CROSS ARM ASSEMBLY ONLY.

GRAPHIC SCALE

1" = 25' 0 25' 50'

SYM	DESCRIPTION	DATE	APPR
1	REVISION 1 AMENDMENT 5	4/2/15	

SEAL

A/E INFO

APPROVED

FOR COMMANDER NAVFAC

ACTIVITY LCDR W. PURCELL

SATISFACTORY TO DATE 27 OCT 2014

DES WED DRW WED CHK

PM PERRY

BRANCH MANAGER

DM MCDONALD

FIRE PROTECTION

DEPARTMENT OF THE NAVY
NAVAL FACILITIES ENGINEERING COMMAND
HAMPTON ROADS IPT

NAVAL FACILITIES ENGINEERING COMMAND
NAVAL STATION NORFOLK, VA

NAVAL WEAPONS STATION YORKTOWN, VA

MCSFR FAST COMPANY TRAINING FACILITY

PARKING LOT LIGHTING PLAN

SCALE: AS SHOWN

EPROJECT NO.: 1312141

CONSTR. CONTR. NO.

NAVFAC DRAWING NO. 12683563

SHEET 114 OF 196

ES102

DRAWFORM REVISION: 10 MARCH 2009