REPLACE SIDING - BLDGS 101, 102, 103, 104, 105, 113, 202, 204, 207, 209, 210, 211, 212, & 213

BUILDING 209

NAVAL SUPPORT ACTIVITY
MECHANICSBURG, PENNSYLVANIA

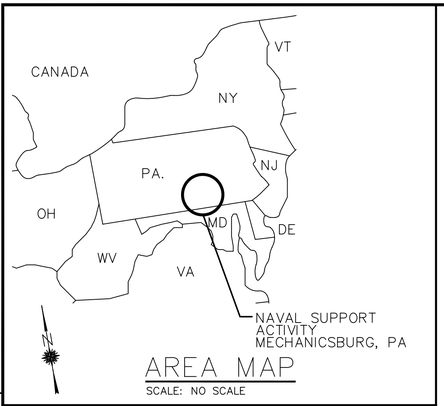

AREA MAP
SCALE: NO SCALE

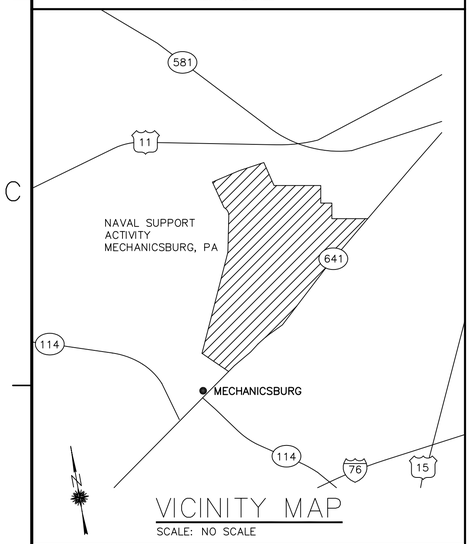

VICINITY MAP
SCALE: NO SCALE

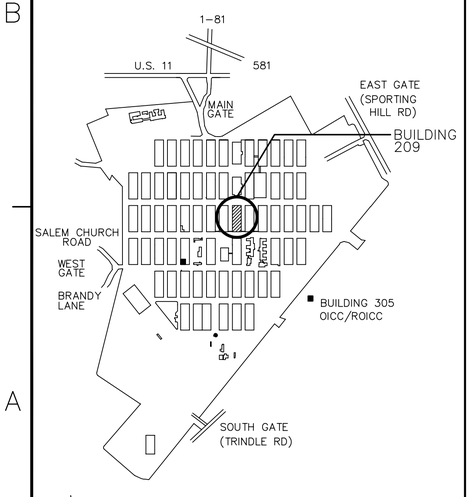

SITE PLAN
SCALE: NO SCALE

PREPARED BY:

Quad3
Architecture
Engineering
Environmental Services

QUAD THREE GROUP, INC.

37 NORTH WASHINGTON STREET
WILKES-BARRE, PA. 18701

INDEX OF DRAWINGS

SHEET NO.	DRAWING NO.	PWD-ME DWG. NO.	N.A.V.F.A.C. DWG. NO.	TITLE
1 OF 18	CS-001	209-10258	12560421	LOCATION PLAN AND INDEX OF DRAWINGS
2 OF 18	A-001	209-10259	12560422	ARCHITECTURAL GENERAL INFORMATION
3 OF 18	A-002	209-10260	12560423	MATERIALS/ITEMS LEGEND AND NOTES
4 OF 18	G-100	209-10261	12560424	PHOTO LAYOUTS AND ELEVATIONS – BUILDING 209
5 OF 18	G-101	209-10262	12560425	PHOTOGRAPHS – BUILDING 209
6 OF 18	G-102	209-10263	12560426	PHOTOGRAPHS – BUILDING 209
7 OF 18	G-103	209-10264	12560427	PHOTOGRAPHS – BUILDING 209
8 OF 18	AD-100	209-10265	12560428	PARTIAL DEMOLITION FLOOR PLAN AND ELEVATIONS – BUILDING 209
9 OF 18	AD-101	209-10266	12560429	PARTIAL DEMOLITION FLOOR PLAN AND ELEVATIONS – BUILDING 209
10 OF 18	AD-102	209-10267	12560430	PARTIAL DEMOLITION FLOOR PLAN AND ELEVATIONS – BUILDING 209
11 OF 18	AD-103	209-10268	12560431	PARTIAL DEMOLITION FLOOR PLAN AND ELEVATIONS – BUILDING 209
12 OF 18	A-100	209-10269	12560432	PARTIAL FLOOR PLAN AND ELEVATIONS – BUILDING 209
13 OF 18	A-101	209-10270	12560433	PARTIAL FLOOR PLAN AND ELEVATIONS – BUILDING 209
14 OF 18	A-102	209-10271	12560434	PARTIAL FLOOR PLAN AND ELEVATIONS – BUILDING 209
15 OF 18	A-103	209-10272	12560435	PARTIAL FLOOR PLAN AND ELEVATIONS – BUILDING 209
16 OF 18	A-300	209-10273	12560436	TYPICAL SECTIONS
17 OF 18	A-301	209-10274	12560437	TYPICAL SECTIONS
18 OF 18	A-400	209-10275	12560438	TYPICAL LARGE SCALE ELEVATIONS

APPROVED: DATE:
OFFICER IN CHARGE
REVIEWED BY: DATE:
ENVIRON.:
FIRE DEPT.
SAFETY
SATISFACTORY TO:
TENANT

PWO. DWG. NO. PWD
DESIGNED
DRAWN CHKD
HD ARCH.
HD STRU.
HD CIVIL
HD ELEC.
HD MECH.
SATISFACTORY TO:
DIRECTOR OF DESIGN DATE:

NO.	DESCRIPTION	DATE	APPR

NAVFAC

REGISTERED ARCHITECT PENNSYLVANIA CS-001 DWG NO. EX 12345 SEAL

Quad3
Architecture
Engineering
Environmental Services
37 North Washington Street
Wilkes-Barre, PA 18701
phone 570 829-4200
fax 570 829-3732
web www.quad3.com
A/E INFO

APPROVED
FOR COMMANDER NAVFAC
ACTIVITY
REPLACE SIDING- BLDGS 101, 102, 103, 104, 105, 113, 202, 204, 207, 209, 210, 211, 212, & 213
POC: DAVID A. RHOADS
SATISFACTORY TO DATE 05/04/10
DES SS DRW CM CHK SS
PM/DM XXX/XXX
BRANCH MANAGER
CHIEF ENG/ARCH DAR
FIRE PROTECTION

DEPARTMENT OF THE NAVY
NAVAL FACILITIES ENGINEERING COMMAND
NORTHEAST IPT
NAVAL FACILITIES ENGINEERING COMMAND ~ MID-ATLANTIC
NAVAL STATION - NORFOLK, VIRGINIA
NAVAL SUPPORT ACTIVITY
MECHANICSBURG, PENNSYLVANIA
REPLACE SIDING - BLDGS 101, 102, 103, 104, 105, 113, 202, 204, 207, 209, 210, 211, 212, & 213
LOCATION PLAN AND INDEX OF DRAWINGS

SCALE: AS NOTED
EPROJECT NO.: 811707
CONSTR. CONTR. NO. -
NAVFAC DRAWING NO. 12560421
SHEET 1 OF 18
CS-001 209-10258

DRAWFORM REVISION: 10 MARCH 2009

FILE NAME: K:\10204.01\ARCH\Building 209\10204-209-CS-001.dwg LAYOUT NAME: CS-001 PLOTTED: Thursday, May 06, 2010 - 3:37pm USER: cmcdaughlin

ARCHITECTURAL ABBREVIATIONS

(TYPICAL OFFICE ARCHITECTURAL ABBREVIATIONS –
ALL MAY NOT BE APPLICABLE TO THIS PROJECT OR TO ALL DRAWINGS)

@	AT
A/C	AIR CONDITIONING
AB	ANCHOR BOLT
ACOUS	ACOUSTICAL
ACT	ACOUSTICAL CEILING TILE
ADD	ADDENDUM
ADJ	ADJUSTABLE
AFF	ABOVE FINISHED FLOOR
ALT	ALTERNATE
ALUM	ALUMINUM
ANOD	ANODIZED
APC	ACOUSTICAL PANEL CEILING
APPROX	APPROXIMATE
ARCH	ARCHITECT
ASB	ASBESTOS
ASPH	ASPHALT
AUTO	AUTOMATIC
BD	BOARD
BLDG	BUILDING
BLK	BLOCK
BLKG	BLOCKING
BOT	BOTTOM
BSMT	BASEMENT
C	CENTERLINE
CAB	CABINET
CER	CERAMIC
CHAM	CHAMFER
CHBD	CHALK BOARD
CI	CAST IRON
CIP	CAST IN PLACE
CJ	CONTROL JOINT
CLG	CEILING
CLG HGT	CEILING HEIGHT
CMU	CONCRETE MASONRY UNIT
CO	CLEAN OUT
COL	COLUMN
CONC	CONCRETE
CONST	CONSTRUCTION
CONT	CONTINUOUS
CONTR	CONTRACTOR
COR	CONTRACTING OFFICER REPRESENTATIVE
CORR	CORRUGATED
CPT	CARPET
CRS	COURSE
CT	CERAMIC TILE
CTR	COUNTER
CF	CUBIC FOOT
CY	CUBIC YARD
DEMO	DEMOLISH
DTL	DETAIL
DF	DRINKING FOUNTAIN
DIA OR ø	DIAMETER
DIAG	DIAGONAL
DIM	DIMENSION
DN	DOWN
DR	DOOR
DS	DOWN SPOUT
DWG	DRAWING
E	EAST
EA	EACH
EPDM	ETHYLENE–PROPYLENE–DIENE TERPOLYMER
EIFS	EXTERIOR INSULATION FINISH SYSTEM
EJ	EXPANSION JOINT
EL	ELEVATION
ELEC	ELECTRICAL
ELEVA	ELEVATOR
EQ	EQUAL
EQUIP	EQUIPMENT
EST	ESTIMATE
EWC	ELECTRIC WATER COOLER
EX OR EXIST.	EXISTING
EXP	EXPANSION
EXT	EXTERIOR
FA	FIRE ALARM
FD	FLOOR DRAIN
FEC	FIRE EXTINGUISHER CABINET
FF OR FIN FL	FINISHED FLOOR
FFE	FINISHED FLOOR ELEVATION
FIN	FINISH
FL	FLOOR
FLUOR	FLUORESCENT
FND	FOUNDATION
FOC	FACE OF CONCRETE
FOM	FACE OF MASONRY
FOS	FACE OF STUDS
FR	FRAME
FTG	FOOTING
GA	GAUGE
GB	GRAB BAR
GC	GENERAL CONTRACTOR
GF	GROUND FACE
GL	GLASS
GWB	GYPSUM WALL BOARD
HC	HOLLOW CORE
HC OR HDCP	HANDICAP
HDW	HARDWARE
HM	HOLLOW METAL
HORIZ	HORIZONTAL
HP	HIGH POINT
HR	HOUR
HGT	HEIGHT
HVAC	HEATING/VENTILATION/AIR CONDITIONING
HWH	HOT WATER HEATER
ID	INSIDE DIAMETER
INCL	INCLUDED
INFO	INFORMATION
INSUL	INSULATION
INT	INTERIOR
JT	JOINT
KIT	KITCHEN
LAB	LABORATORY
LAV	LAVATORY
LF	LINEAR FOOT
LLH	LONG LEG HORIZONTAL
LLV	LONG LEG VERTICAL
LP	LOW POINT
MAS	MASONRY
MTRL	MATERIAL
MAX	MAXIMUM
MECH	MECHANICAL
MFR	MANUFACTURER
MIN	MINIMUM
MISC	MISCELLANEOUS
MO	MASONRY OPENING
MOV	MOVABLE
MTD	MOUNTED
MTL	METAL
N	NORTH
NIC	NOT IN CONTRACT
NO.	NUMBER
NOM	NOMINAL
NRC	NOISE REDUCTION COEFFICIENT
NTS	NOT TO SCALE
OA	OVERALL
OC	ON CENTER
OD	OUTSIDE DIAMETER
OH	OVERHEAD
OPNG	OPENING
OPP	OPPOSITE
PC	PRECAST
PCF	POUNDS PER CUBIC FOOT
PL	PLATE
PLAM	PLASTIC LAMINATE
PR	PAIR
PREFAB	PREFABRICATED
PSF	POUNDS PER SQUARE FOOT
PSI	POUNDS PER SQUARE INCH
PTD	PAINTED
PVC	POLYVINYL CHLORIDE
QT	QUARRY TILE
R	RISER
R OR RAD	RADIUS
RCB	RUBBER COVE BASE
RCP	REFLECTED CEILING PLAN
RD	ROOF DRAIN
REINF	REINFORCED
REQD	REQUIRED
REV	REVISION OR REVISED
RM	ROOM
RO	ROUGH OPENING
RWB	RUBBER WALL BASE
RWC	RAIN WATER CONDUCTOR
S	SOUTH
SAN	SANITARY
SC	SOLID CORE
SCHED	SCHEDULE
SECT	SECTION
SF	SQUARE FOOT/SQUARE FEET
SIM	SIMILAR
SOH	SIMILAR OPPOSITE HAND
SPEC	SPECIFICATION
SQ	SQUARE
SS	STAINLESS STEEL
STL	STEEL
STD	STANDARD
STOR	STORAGE
STRUCT	STRUCTURAL
SUSP	SUSPENDED
SYM	SYMMETRICAL
T&G	TONGUE AND GROOVE
TOS	TOP OF STEEL
TB	TACKBOARD
TEL	TELEPHONE
THK	THICK
TOF	TOP OF FOOTING
TR	TREAD
TV	TELEVISION
TW	TOP OF WALL
TYP	TYPICAL
UNO	UNLESS OTHERWISE NOTED
VAT	VINYL ASBESTOS TILE
VB	VAPOR BARRIER
VCB	VINYL COVE BASE
VCT	VINYL COMPOSITION TILE
VERT	VERTICAL
VWB	VINYL WALL BASE
VWC	VINYL WALL COVERING
W	WEST
W/	WITH
W/O	WITHOUT
WD	WOOD
WPT	WORKING POINT
WWF	WELDED WIRE FABRIC

ARCHITECTURAL SYMBOLS/LEGEND LIST

(TYPICAL OFFICE ARCHITECTURAL SYMBOLS/LEGEND –
ALL MAY NOT BE APPLICABLE TO THIS PROJECT OR TO ALL DRAWINGS)

WALL LEGEND
- EXISTING DOOR/FRAME TO REMAIN (SINGLE DOOR SHOWN– SIMILAR FOR DOUBLE DOORS)
- DEMOLITION OF EXISTING DOOR/FRAME/HARDWARE (SINGLE DOOR SHOWN– SIMILAR FOR DOUBLE DOORS)
- MATERIALS/ITEMS/CONSTRUCTION TO BE REMOVED (WITH OR WITHOUT HATCH)
- NEW WALLS/CONSTRUCTION (WITH OR WITHOUT HATCH)
- NEW DOORS/FRAMES/HARDWARE– REFER TO PLANS AND/OR DOOR SCHEDULE (SINGLE DOOR SHOWN– SIMILAR FOR DOUBLE DOORS)

DOOR REFERENCE AT PLAN: 209/A — BUILDING REFERENCE; DOOR TYPE

ROOM REFERENCE AT PLAN: ROOM NAME / 10 — ROOM NUMBER

MATERIAL/ITEM REFERENCE: TAG * TAG TAG — MATERIAL/ITEM– REFER TO SYMBOL LEGEND ON A–002

REVISION SYMBOL: 1 — REVISION SYMBOL (NUMBER)

CENTERLINE — CENTERLINE

MATCHLINE: SHEET REFERENCE / SHEET REFERENCE — MATCHLINE

TYPICAL HATCH
- AREA OF EIFS REMOVAL
- AREA OF WALL INFILL (PLANS)
- AREA OF BRICK VENEER/CMU INFILL (ELEVATIONS)
- AREA OF CMU/PARGING INFILL (ELEVATIONS)
- ASBESTOS CONTAINING MATERIAL TO BE REMOVED AND/OR ABATED
- AREA OF WINDOW UNIT AND/OR OVERHEAD DOOR REMOVAL AND SUBSEQUENT WALL OPENING INFILL

DIMENSION: DIM. — DIMENSION TO FACE OF BLDG. ELEMENT (UNO)

PLAN TITLE: TRUE NORTH INDICATOR; PLAN NORTH; VIEWTITLE / ViewportScale

DETAIL/SECTION/ELEVATION TITLE: VIEWTITLE / ViewportScale; DETAIL IDENTIFICATION A#; SHEET(S) WHERE SECTION/DETAIL WERE CALLED OUT A–000

BUILDING SECTION LINE: SECTION IDENTIFICATION 0 / A–000; SHEET WHERE SECTION APPEARS

PLAN SECTION LINE: SECTION IDENTIFICATION 0 / A–000; SHEET WHERE SECTION APPEARS

EXTERIOR ELEVATION: ELEVATION IDENTIFICATION 0 / A–000; SHEET WHERE ELEVATION APPEARS

INTERIOR ELEVATION: XX A–000 XX; ELEVATION IDENTIFICATION; OR 0 / A–000; SHEET WHERE ELEVATION APPEARS

DETAIL BOUNDARY: 0 / A–000; OR; OR; DETAIL IDENTIFICATION; SHEET WHERE DETAIL APPEARS

DETAIL MARK: DETAIL IDENTIFICATION 0 / A–000; SHEET WHERE DETAIL APPEARS

ARCHITECTURAL GENERAL NOTES

1. ALL CONSTRUCTION SHALL COMPLY WITH THE GUIDELINES AND CRITERIA FOR ACCESSIBILITY AS SET FORTH IN ANSI A117 VERSION 2003 & ADAG 2004.
2. COMPLY WITH ALL LOCAL BUILDING CODE REGULATIONS, THE UFC 1–200–01 BUILDING CODE, NFPA 101 LIFE SAFETY CODE, APPLICABLE AND/OR MOST CURRENT EDITION ENFORCED. COMPLY WITH ALL SAFETY REQUIREMENTS OF ALL GOVERNING AUTHORITIES.
3. VERIFY ALL DIMENSIONS AND CONDITIONS AT THE JOBSITE BEFORE COMMENCEMENT OF WORK AND REPORT ALL ERRORS, OMISSIONS OR DISCREPANCIES TO THE CONTRACTING OFFICER REPRESENTATIVE (COR) IN WRITING PRIOR TO STARTING WORK. IN ALL CASES WHERE CONFLICTS MAY OCCUR SUCH AS BETWEEN ITEMS INCLUDED IN THE SPECIFICATIONS AND NOTES ON THE DRAWINGS, THE CONTRACTING OFFICER REPRESENTATIVE (COR) SHALL BE NOTIFIED AND WILL INTERPRET THE INTENT OF THE CONTRACT DOCUMENTS.
4. DRAWING REFERENCES ARE FOR CONVENIENCE ONLY AND DO NOT LIMIT THE APPLICATION OF THE DRAWING OR DETAIL. THE WORK SHOWN ON ONE DRAWING OR DETAIL IS APPLICABLE THROUGHOUT THE PROJECT WHETHER IDENTIFIED OR NOTED AS TYPICAL OR NOT.
5. SAFEGUARD GOVERNMENT PROPERTY AND ADJACENT PROPERTIES DURING CONSTRUCTION AND REPLACE ANY DAMAGED GOVERNMENT PROPERTY OR ADJACENT PROPERTIES TO THE ORIGINAL CONDITION.
6. MANUFACTURER'S NAMES AND MODEL NUMBERS ARE USED TO PROVIDE AN INDICATION OF QUALITY, STYLE, AND SIZE DESIRED. OTHER MANUFACTURER'S MODELS OF EQUIVALENT QUALITY, STYLE & SIZE THAT ARE DETERMINED BY THE CONTRACTING OFFICER REPRESENTATIVE (COR) TO BE EQUAL ARE ACCEPTABLE, UNLESS NOTED OTHERWISE. REFER TO PROJECT MANUAL FOR THOSE AREAS WHERE OTHER THAN SPECIFIED PRODUCTS WILL BE CONSIDERED.
7. EACH PRIME CONTRACT BIDDER WILL RECEIVE A FULL SET OF BIDDING/CONTRACT DOCUMENTS PRIOR TO BIDDING. IT IS EACH PRIME CONTRACT BIDDER'S RESPONSIBILITY TO REVIEW ALL DISCIPLINE'S DRAWINGS TO DETERMINE, TO THEIR SATISFACTION, THEIR SCOPE OF WORK PRIOR TO BIDDING. NO ADDITIONAL CONSIDERATION OR COMPENSATION WILL BE CONSIDERED FOR FAILURE TO DO SO.
8. IF AN ITEM, NOTE OR WORK IS SHOWN OR CALLED OUT ON ONE DRAWING, IT SHALL SHALL BE UNDERSTOOD TO BE REQUIRED THROUGHOUT THE PROJECT WHETHER INDICATED ON OTHER DRAWINGS OR NOT, WITHOUT EXCEPTION.
9. REMOVAL OF ASBESTOS CONTAINING MATERIALS IS REQUIRED AS PART OF THIS PROJECT. REFER TO SECTION 02 82 16.00 20 FOR DESCRIPTION OF WORK.

'SAFETY FIRST'

IT SHALL BE THE CONTRACTOR'S PRIORITY TO PUT 'SAFETY FIRST' IN ALL CONSTRUCTION ACTIVITIES. SPECIFICATION SECTION 01 35 26 GOVERNMENT SAFETY REQUIREMENTS INCORPORATES SAFETY AND HEALTH DOCUMENTS IN THIS CONTRACT.
THE MOST STRINGENT REQUIREMENT SHALL APPLY IN ALL CASES INVOLVING DISCREPANCIES BETWEEN THESE DOCUMENTS.
SPECIAL ATTENTION IS CALLED TO USEACE SAFETY AND HEALTH REQUIREMENTS MANUAL EM 385–1–1 DATED 15 SEPTEMBER 2008: 'ACCIDENT PREVENTION PLAN' (APPENDIX A), 'ACTIVITY HAZARD ANALYSIS' (SECTION 1), 'SAFE ACCESS AND FALL PROTECTION' (SECTION 21) AND OTHER SECTIONS DEALING WITH FALL PROTECTION AND THESE CONSTRUCTION ACTIVITIES.

MECHANICAL NOTES

1. PROVIDE GALVANIZED EXTENSION SLEEVES AND BLOCKING AT ALL LOUVERS, WINDOW AIR CONDITIONERS, PACKAGED TERMINAL AIR CONDITIONERS, EXHAUST FANS, AND EXHAUST TERMINATIONS. SHEETMETAL SHALL MEET SMACNA REQUIREMENT. PROVIDE FASTENERS AND LAG BOLTS TO MATCH EXISTING.
2. MODIFICATIONS TO THE SPRINKLER SYSTEM, INCLUDING, BUT NOT LIMITED TO, WATER GONGS, DRAIN PIPES, INSPECTOR TEST STATION DRAIN PIPES, AND FIRE DEPARTMENT CONNECTIONS SHALL BE IN ACCORDANCE WITH THE LATEST EDITION OF NFPA–13.
3. EXHAUST FANS OR LOUVERS THAT HAVE FALLEN INTO DISREPAIR OR ARE SUSPECTED TO BE NON–FUNCTIONAL SHALL BE REVIEWED BY THE COR IN THE FIELD TO DETERMINE IF ITEM IS TO BE REINSTALLED. ASSUME ALL MECHANICAL ITEMS ARE TO BE REMOVED AND REINSTALLED.
4. WINDOW AIR CONDITIONERS SHALL BE CATALOGED, REMOVED AND STORED AS OTHER MECHANICAL ITEMS, EXCEPT THE GOVERNMENT WILL REINSTALL ALL WINDOW AIR CONDITIONERS.
5. PACKAGED TERMINAL AIR CONDITIONERS MUST BE KEPT OPERATIONAL THROUGHOUT CONSTRUCTION. PROVIDE TEMPORARY MEANS TO KEEP UNITS OPERATIONAL DURING CONSTRUCTION. PROVIDE TEMPORARY AND PERMANENT PIPING CONNECTION MODIFICATIONS TO PROPERLY DRAIN AIR CONDITIONER CONDENSATE.
6. WINDOW AIR CONDITIONERS AND PTAC UNITS MAY ACTUALLY BE ELECTRIC HEAT PUMPS; HOWEVER, FOR THE PURPOSE OF THIS CONTRACT, THEY SHALL BE IDENTIFIED AS A WINDOW AIR CONDITIONING UNIT OR A PTAC UNIT.

ELECTRICAL NOTES

1. FIRE ALARM SYSTEM MUST BE KEPT OPERATIONAL THROUGHOUT CONSTRUCTION. PROVIDE TEMPORARY MEANS TO KEEP EXISTING DEVICES OPERATIONAL. EACH DEVICE RELOCATED SHALL BE INSTALLED IN A CODE COMPLIANT MANNER. FOLLOW NFPA 70 AND NFPA 72 REQUIREMENTS FOR MOUNTING HEIGHTS AND LOCATIONS.
2. MODIFICATIONS TO EXISTING ELECTRICAL DISTRIBUTION CIRCUITS, CONDUIT, CONDUCTORS, AND BREAKERS SHALL BE IN ACCORDANCE WITH THE LATEST VERSION OF THE NATIONAL ELECTRICAL CODE (NFPA 70) AND SHALL NOT PENETRATE ROOF UNDER ANY CIRCUMSTANCE.
3. MOTORIZED DOORS SHALL BE CIRCUITED TO ADJACENT PANELBOARD(S). THE ELECTRICAL CHARACTERISTICS FOR EACH MOTORIZED DOOR SHALL BE COORDINATED WITH ASSOCIATED PANELBOARD CHARACTERISTICS.
4. ALL CONDUITS AND CONDUCTORS SHALL BE CONCEALED. CONDUITS MAY BE INSTALLED UNDERNEATH FASCIA PRIOR TO CONSTRUCTION. CONDUITS AND CONDUCTORS FED TO WALL MOUNTED DEVICES MAY PENETRATE WALL AS MEANS TO CONCEAL CONDUIT AND CONDUCTORS. PROVIDE PROPER GASKETING OR SEALANT TO PREVENT MOISTURE CONTAMINATING ELECTRICAL CONNECTIONS.
5. ALL LIGHTING TO BE REINSTALLED SHALL BE FED FROM A CONCEALED EXISTING CIRCUIT, WHICH SHALL NOT PENETRATE ROOF UNDER ANY CIRCUMSTANCE.

CANOPY DETAILS SCALE: NOT TO SCALE

1. SNOW LOAD DESIGN: 42 LBS PER SF NORTHEAST SNOW LOAD.
   WIND LOAD DESIGN: 50–70 MPH.
2. 1" x 1" STEEL TUBING– ALL JOINTS WELDED AND GROUND SMOOTH.
3. CONNECTION DETAIL AS PER CANOPY MANUFACTURER RECOMMENDED DETAIL– COORDINATE WITH COR.
4. PROVIDE CONTINUOUS FLASHING/DRIP EDGE/SEALANT AS REQUIRED.
5. FIELD VERIFY EXISTING BUILDING COMPONENTS TO PROVIDE APPROPRIATE METHOD/MEANS OF SECURE FASTENING.
6. BUILDING CATEGORY / "SUNBRELLA" COLOR NAME AND NUMBER
   - INDUSTRIAL DISTRICT — SAPPHIRE BLUE, SB4641
   - TRAINING/ADMIN. DISTRICT — FOREST GREEN, SB4637
   - PERSONNEL DISTRICT — COCOA, SB4676

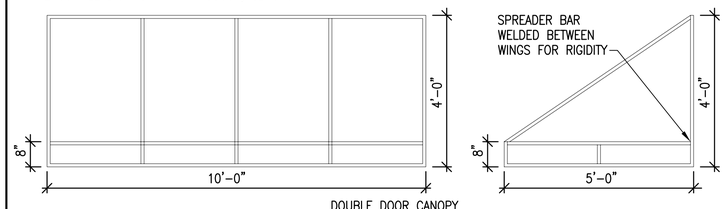

DOUBLE DOOR CANOPY

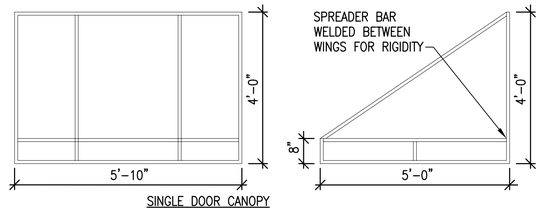

SINGLE DOOR CANOPY

Quad3 Architecture Engineering Environmental Services
37 North Washington Street
Wilkes-Barre, PA 18701
phone 570 829-4200
fax 570 829-3732
web www.quad3.com
A/E INFO

APPROVED
FOR COMMANDER NAVFAC

ACTIVITY
REPLACE SIDING– BLDGS 101, 102, 103, 104, 105, 113, 202, 204, 207, 209, 210, 211, 212, & 213
POC: DAVID A. RHOADS

SATISFACTORY TO — DATE: 05/04/10
DES: SS | DRW: CM | CHK: SS
PM/DM: XXX/XXX
BRANCH MANAGER
CHIEF ENG/ARCH: DAR
FIRE PROTECTION

DEPARTMENT OF THE NAVY
NAVAL FACILITIES ENGINEERING COMMAND – MID-ATLANTIC
NAVAL STATION – NORFOLK, VIRGINIA
NORTHEAST IPT
NAVAL FACILITIES ENGINEERING COMMAND ~ MID-ATLANTIC
NAVAL SUPPORT ACTIVITY
MECHANICSBURG, PENNSYLVANIA
REPLACE SIDING - BLDGS 101, 102, 103, 104, 105, 113, 202, 204, 207, 209, 210, 211, 212, & 213
ARCHITECTURAL GENERAL INFORMATION

SCALE: AS NOTED
EPROJECT NO.: 811707
CONSTR. CONTR. NO.: -
NAVFAC DRAWING NO. 12560422
SHEET 2 OF 18
A-001 | 209-10259

DRAWFORM REVISION: 10 MARCH 2009

FILE NAME: K:\10204.01\ARCH\Building 209\10204-209-A-001.dwg LAYOUT NAME: A-001 PLOTTED: Thursday, May 06, 2010 - 3:36pm USER: cmcloughlin

GENERAL DEMOLITION NOTES

1D. VERIFY AND COORDINATE EXTENT OF ALL DEMOLITION WORK INDICATED ON ALL DRAWINGS AND/OR IN THE SPECIFICATIONS.

2D. THE MATERIALS/ITEMS LEGEND TAGS IDENTIFY THE GENERAL SCOPE OF WORK. PERFORM ANY AND ALL DEMOLITION OPERATIONS REQUIRED FOR THE DEMOLITION WORK WHETHER IDENTIFIED OR NOT.

3D. REMOVE ALL EXISTING SIGNAGE, PLAQUES, ETC. AND REINSTALL IN LOCATIONS DETERMINED BY CONTRACTING OFFICER REPRESENTATIVE (COR) WHETHER INDICATED HEREIN OR NOT.

4D. ASBESTOS ABATEMENT IS INCLUDED IN THE SCOPE OF WORK. REFER TO ASBESTOS ABATEMENT IN THE SPECIFICATIONS.

5D. IF UNDOCUMENTED ASBESTOS CONTAINING MATERIALS AND HAZARDOUS MATERIALS ARE ENCOUNTERED, NOTIFY THE CONTRACTING OFFICER REPRESENTATIVE IMMEDIATELY.

6D. DASHED LINES INDICATE CONSTRUCTION TO BE REMOVED. REFER TO MATERIAL/ITEM TAG REFERENCES FOR ADDITIONAL CONSTRUCTION TO BE REMOVED, THAT IS NOT SHOWN DASHED..

7D. THE DRAWINGS PROVIDED ARE ONLY INTENDED TO BE A LIMITED GRAPHIC REPRESENTATION OF EXISTING CONDITIONS, DO NOT SCALE DRAWINGS. IT SHALL BE THE RESPONSIBILITY OF THE BIDDERS TO VISIT THE SITE PRIOR TO BIDDING TO VERIFY ALL DIMENSIONS AND CONDITIONS ASSOCIATED WITH THE DEMOLITION. NOTIFY THE CONTRACTING OFFICER REPRESENTATIVE OF ANY DISCREPANCIES PRIOR TO BIDDING.

8D. ANY AREA DAMAGED DURING DEMOLITION OR CONSTRUCTION ACTIVITIES SHALL BE REPAIRED AT NO EXPENSE TO THE GOVERNMENT.

9D. PRIOR TO THE START OF DEMOLITION, THE CONTRACTING OFFICER REPRESENTATIVE WILL CONDUCT A WALK THRU TO IDENTIFY ANY MATERIALS OR EQUIPMENT THAT WILL BE REMOVED BY THE GOVERNMENT.

10D. ALL NON-ASBESTOS CONTAINING MATERIALS STOCKPILED IN THE FACILITY DURING ASBESTOS ABATEMENT ACTIVITIES SHALL BE LEGALLY DISPOSED OF UNDER THIS CONTRACT. REMOVE DEBRIS DAILY.

11D. MAINTAIN CONTINUITY OF EXISTING CIRCUITS FOR EQUIPMENT/DEVICES TO REMAIN. CIRCUITS TO REMAIN BUT DISTURBED DURING DEMOLITION SHALL BE RESTORED TO THEIR ORIGINAL CONDITION.

12D. PROVIDE TEMPORARY POWER AND LIGHTING AS REQUIRED FOR DEMOLITION OPERATIONS. USE QUALIFIED ELECTRICIANS FOR ELECTRICAL TIE-INS. COORDINATE ELECTRICAL REQUIREMENTS FOR ASBESTOS ABATEMENT WORK.

13D. COORDINATE ALL DEMOLITION OPERATIONS AND SCHEDULE WITH THE CONTRACTING OFFICER REPRESENTATIVE. REFER TO SPECIFICATIONS.

14D. COORDINATE THE REMOVAL AND REINSTALLATION OF ALL EXISTING EXTERIOR SIGNAGE WITH THE CONTRACTING OFFICER REPRESENTATIVE- NOT ALL MAY BE TAGGED ON THE DRAWINGS.

GENERAL CONSTRUCTION NOTES

1. SELECT EXISTING MATERIALS SCHEDULED TO REMAIN AND RECEIVE PAINT FINISH SHALL BE REFURBISHED AS FOLLOWS: SCRAPE AND SAND DAMAGED AREAS, PREP AS REQUIRED. PRIME PAINT ONE COAT AND PAINT TWO FINISH COATS.
2. PROVIDE PRE-FINISHED INSULATED METAL PANEL SIDING- REFER TO ELEVATIONS ON DRAWINGS A-100 THRU A-103 FOR AREAS.
   THESE AREAS ARE INDICATED BY A VERTICAL LINE HATCH PATTERN.
3. BUILDING IDENTIFICATION SIGNAGE:
   PROVIDE SURFACE MOUNTED PRE-FINISHED METAL SIGNAGE PANEL- REFER TO DETAIL. VERIFY SIZE, TEXT, COLORS AND MOUNTING LOCATION WITH COR.
4. FOR ALL REINSTALLED ITEMS (ELECTRICAL AND/OR MECHANICAL) THAT INCORPORATE CONDUIT AND PIPING LINES, RE-INSTALLATION OF CONDUIT AND PIPING LINES SHALL OCCUR WITHIN INTERIOR SIDE OF BUILDING PERIMETER TO ENSURE ACCESS. DO NOT CONCEAL ANY CONNECTIONS OR COMPONENTS BEHIND FINISHED EXTERIOR TYPICAL.
5. THE CONTRACTOR SHALL INCLUDE IN THEIR BID, COSTS FOR THE DEMOLITION, REMOVAL, DISPOSAL OF DETERIORATED ITEMS AND FOR PROVIDING THE FOLLOWING NEW ITEMS. THE LOCATIONS OF EACH SHALL BE DETERMINED BY THE COR IN THE FIELD.
   A) 1000 BOARD FEET OF LUMBER FOR BLOCKING, NAILERS, OUTRIGGERS, FASCIAS.
   B) 1000 SQUARE FEET OF 3/4" PLYWOOD SHEATHING TO REPLACE EXISTING WALL SHEATHING
   C) 1000 SQUARE FEET OF TRANSITE PANEL REMOVAL AND DISPOSAL
   D) 250 LINEAR FEET OF CONCRETE SILL REPLACEMENT

THE ABOVE ITEMS ARE ABOVE AND BEYOND THAT REQUIRED FOR THE NEW CONSTRUCTION. ANY ADDITIONAL OR DELETED ITEMS WILL BE ADDED OR DEDUCTED BASED UPON THE UNIT PRICES PROVIDED.

METAL STUD PRODUCT IDENTIFICATION

600S200-68

- 6" = 600 x 1/100 INCHES
- S = STUD OR JOIST
- T = TRACK
- U = CHANNEL
- F = FURRING
- 2" = 200 x 1/100 INCHES
- .068 IN = 68 MILS
  1 MIL = 1/1000 INCH

NOTE: SIZE INDICATED FOR REFERENCE ONLY. SEE PLANS, SECTIONS AND SCHEMATICS.

MATERIALS/ITEMS LEGEND

(NOTE: MASTER MATERIALS LEGEND LISTED- NOT ALL ITEMS MAY BE APPLICABLE TO INDIVIDUAL BUILDING SCOPE OF WORK)

(EXISTING ITEMS TO REMAIN- NO WORK UNLESS NOTED OTHERWISE)

- 1A EXISTING APPROXIMATE FINISHED GRADE
- 1B EXISTING BITUMINOUS PAVE RAMP WITH CONCRETE CURBS
- 1C EXISTING DRIVE (BITUMINOUS PAVE/GRAVEL) WITH CONCRETE CURBS
- 1D EXISTING CONCRETE APRON/SIDEWALK
- 1E EXISTING CONCRETE STEPS/METAL RAILING(S)
- 1F EXISTING BASE/FOUNDATION- CONCRETE
- 1G EXISTING BASE- BRICK VENEER
- 1H EXISTING RAINWATER RECEPTOR- REFER TO GENERAL CONSTRUCTION NOTE 1
- 1J EXISTING STEEL CORNER ANGLE(S)- REFER TO GENERAL CONSTRUCTION NOTE 1.
  NOTE: COORDINATE QUANITIES AND LOCATIONS OF EXISTING STEEL CORNER ANGLE(S) TO BE STRAIGHTENED/RESET/REPLACED AS DETERMINED BY COR IN THE FIELD.
- 1K EXISTING PRECAST CONCRETE SILL
- 1L EXISTING BRICK VENEER
- 1M EXISTING EIFS
- 1N EXISTING METAL FLASHING/TRIM- REFER TO GENERAL CONSTRUCTION NOTE 1
- 1P EXISTING METAL FASCIA/EIFS AT OVERHANG- REFER TO SECTIONS
- 1Q EXISTING FIRE WALL ABOVE ROOF (BRICK WITH/WITHOUT METAL COVERING)
- 1R EXISTING MONITOR ABOVE ROOF (NOT IN CONTRACT)
- 1S EXISTING SPRINKLER SIGHT WINDOW LOCATION-
  COORDINATE LOCATIONS WITH CONSTRUCTION ACTIVITIES (COR)
- 1T EXISTING WOOD LOADING DOCK COLUMNS
- 1U EXISTING OVERHEAD DOOR- REFER TO GENERAL CONSTRUCTION NOTE 1
- 1V EXISTING ROOF ACCESS LADDER- COORDINATE REMOVAL AND REINSTALLATION AS REQUIRED TO PERFORM CONSTRUCTION ACTIVITIES WIH COR
- 1W EXISTING WOOD FRAME
- 1X EXISTING METAL MANDOOR- REFER TO GENERAL CONSTRUCTION NOTE 1
- 1Y EXISTING METAL DOOR FRAME- REFER TO GENERAL CONSTRUCTION NOTE 1
- 1Z EXISTING SIGNAGE- REFER TO GENERAL DEMOLITION NOTE 14D
- 1AA EXISTING WALL MOUNTED MAILBOX- COORDINATE WITH COR

NOTE: REFER TO GENERAL DEMOLITION NOTES FOR ADDITIONAL INFORMATION (TYPICAL THROUGHOUT)

(EXISTING ITEMS TO BE REMOVED)

- 2A REMOVE EXISTING RAINWATER CONDUCTOR PIPING- ROOF DRAIN AND RAINWATER CONDUCTOR BOOT TO REMAIN.
- 2B REMOVE EXISTING WINDOW FRAME SYSTEM IN ITS ENTIRETY.
  NOTE: REFER TO SEPARATE TAG REFERENCES FOR ADDITIONAL INFORMATION WHERE MISCELLANEOUS ITEMS (LOUVERS, EXHAUST FANS, PIPING, CONDUITS, WIRING, ETC. MAY PENETRATE AND/OR BE INTEGRAL WITH THE WINDOW FRAME SYSTEM)
- 2C REMOVE EXISTING WALL CONSTRUCTION AS FOLLOWS:
  EXTERIOR ASBESTOS "TRANSITE PANELS", NON-STRUCTURAL WOOD PLANKING/NAILERS, AND INTERIOR ASBESTOS "TRANSITE PANELS".
  REMOVAL, HANDLING AND LEGAL DISPOSAL OF ALL ASBESTOS CONTAINING AND/OR CONTAMINATED ITEMS AND MATERIALS SHALL BE IN ACCORDANCE WITH SECTION 02081, "ENGINEERING CONTROL OF ASBESTOS CONTAINING MATERIAL."
  THESE AREAS ARE INDICATED BY 45° CROSS-HATCHED PATTERN
- 2D REMOVE ALL EXISTING EXTERIOR INSULATION AND FINISH SYSTEM (EIFS)
- 2E REMOVE EXISTING OVERHEAD DOOR INCLUDING ALL RELATED HARDWARE/TRIM
  NOTE: COORDINATE SALVAGE WITH COR- 15 LOCATIONS (VERIFY QUANTITY), TO BE SELECTED BY COR IN THE FIELD
- 2F REMOVE EXISTING MANDOOR INCLUDING ALL RELATED HARDWARE
- 2G REMOVE EXISTING DOOR FRAME/CASING/TRIM
- 2H REMOVE EXISTING METAL GATE(S)
- 2J REMOVE EXISTING WOOD GATE(S)
- 2K REMOVE EXISTING WALL INFILL AT OVERHEAD DOOR LOCATION
- 2L REMOVE EXISTING METAL WALL PANELS/TRIM
- 2M REMOVE EXISTING METAL FLASHING/TRIM
- 2N REMOVE EXISTING LOADING DOCK ITEMS (DOCKSEAL, BUMPERS, LEVELERS, ETC.)
- 2P REMOVE EXISTING FABRIC/METAL PIPE CANOPY
- 2Q REMOVE EXISTING WINDOW UNIT
- 2R REMOVE EXISTING INTERIOR OVERHEAD DOOR SECURITY GRILLE
  NOTE: COORDINATE SALVAGE WITH COR- VERIFY QUANTITY, TO BE SELECTED BY COR IN THE FIELD
- 2S REMOVE EXISTING STEEL CORNER ANGLE(S)- PATCH/REPAIR ADJACENT EXISTING CONSTRUCTION AS REQUIRED TO MATCH EXISTING
- 2T REMOVE EXISTING METAL STUD FRAMING INFILL

NOTE: REFER TO GENERAL DEMOLITION NOTES FOR ADDITIONAL INFORMATION (TYPICAL THROUGHOUT)

(ITEMS TO BE PROVIDED WHICH ARE NOT PART OF EXISTING BUILDING)

- 3A PROVIDE 5" DIAMETER PVC RAINWATER CONDUCTOR PIPING- PAINT
- 3B PROVIDE PRE-FINISHED INSULATED METAL WALL PANEL SYSTEM
- 3C PROVIDE INSULATED COILING DOOR
- 3D PROVIDE COILING SECURITY GRILLE
- 3E PROVIDE INSULATED METAL EMERGENCY MANDOOR WITH PANIC HARDWARE
  NOTE: COORDINATE VISION PANEL/GLAZING WITH COR- WHERE/IF APPLICABLE
- 3F PROVIDE INSULATED METAL DOOR FRAME AND METAL FLASHING AS REQUIRED
- 3G PROVIDE ALUMINUM ROOF ACCESS LADDER WITH SAFETY CAGE AND SECURITY DOOR TO MATCH BASE STANDARDS
- 3H PROVIDE FASCIA TRIM AS REQUIRED AT OVERHANG TO MATCH EXISTING
- 3J PROVIDE METAL SOFFIT/TRIM AT OVERHANG
- 3K PROVIDE PRECAST CONCRETE SILL TO MATCH EXISTING
- 3L PROVIDE BRICK BASE TO MATCH EXISTING
- 3M PROVIDE CMU BASE WITH PARGING TO MATCH EXISTING
- 3N PROVIDE PRE-FINISHED INSULATED METAL WALL PANEL SYSTEM/METAL STUD FRAMING INFILL - REFER TO DRAWINGS AD-100 THRU AD-103 FOR FORMER OVERHEAD DOOR LOCATION.
- 3P PROVIDE PRE-FINISHED INSULATED METAL WALL PANEL SYSTEM/METAL STUD FRAMING INFILL - REFER TO DRAWINGS AD-100 THRU AD-103 FOR FORMER WINDOW SYSTEM LOCATION.
- 3Q PROVIDE BUILDING IDENTIFICATION SIGNAGE - REFER TO GENERAL CONSTRUCTION NOTE 3
- 3R PROVIDE LOADING DOCK ITEMS- DOCKSEAL(S) AND BUMPER(S)
- 3S PROVIDE FABRIC/METAL PIPE CANOPY TO MATCH EXISITNG.
  REFER TO DRAWING A-001 FOR ADDITIONAL INFORMATION.
- 3T PROVIDE 28 1/2" WIDE x 20 3/4" HIGH FRAMING FOR FUTURE WINDOW AIR CONDITIONER TO THE INSTALLED BY GOVERNMENT- COORDINATE SIZE WITH COR.
  PROVIDE TEMPORARY PAINTED PLYWOOD CLOSURE PANEL ON INTERIOR SIDE.
- 3U PROVIDE PRE-FINISHED METAL TRIM AS REQUIRED- MATCH WALL PANEL SYSTEM.
  REFER TO DRAWINGS A-300, A-301 AND A-400 FOR ADDITIONAL INFORMATION
- 3V PROVIDE ±12"x12" PRE-FINISHED ALUMINUM FRAME SIGHT WINDOW WITH 1" INSULATED GLASS. PROVIDE FRAME OPENING WITH FLASHINGS/TRIMS/SEALANT AS REQUIRED TYPICAL. EXACT WINDOW LOCATION AND ELEVATION SHALL BE DETERMINED IN THE FIELD TO ALIGN WITH THE SPRINKLER SYSTEM EXISTING INTERIOR PRESSURE GAUGE.
- 3W PROVIDE 42" WIDE x 38" HIGH HOPPER ALUMINUM WINDOW UNIT.
  REFER TO 2/A301 AND 3/A-400

(EXISTING MECHANICAL ITEMS AS DESCRIBED)

- 4A EXISTING LOUVER
- 4B EXISTING SPRINKLER SYSTEM DRAIN PIPE
- 4C EXISTING VENT PIPE
- 4D EXISTING FUEL PIPE
- 4E EXISTING FIRE DEPARTMENT CONNECTION
- 4F EXISTING EXHAUST FAN/EXHAUST TERMINATION
- 4G EXISTING WINDOW AIR CONDITIONER
- 4H EXISTING FIRE HYDRANT ON APRON/SIDEWALK
- 4J EXISTING SPRINKLER INSPECTOR TEST PIPE
- 4K EXISTING MECHANICAL EQUIPMENT
- 4L EXISTING RADON FAN AND PIPING
- 4M EXISTING PACKAGED TERMINAL AIR CONDITIONER (PTAC)
- 4N EXISTING WATER GONG

NOTE: THE EXTENT OF EXISTING MECHANICAL AND ELECTRICAL ITEMS IS FAR LESS THAN THE GENERAL OR MECHANICAL ITEMS, AND AS SUCH, THE TAGGING OF THESE ITEMS IS SOMEWHAT DIFFERENT. IT IS THE INTENT TO REMOVE AND REINSTALL ALL EXISTING MECHANICAL AND ELECTRICAL ITEMS SCHEDULED TO REMAIN. ANY EXPOSED ITEM WHICH CAN BE CONCEALED BEHIND METAL WALL PANELS SHALL BE. THE MAJORITY OF THE ITEMS ARE FURTHER IDENTIFIED WITH AN (*) BESIDE THE TAG.

NOTE: REFER TO GENERAL DEMOLITION NOTES FOR ADDITIONAL INFORMATION (TYPICAL THROUGHOUT)

(ELECTRICAL ITEMS AS DESCRIBED)

- 5A EXISTING RECEPTACLE
- 5B EXISTING OVERHEAD DOOR CONTROLS
- 5C EXISTING PHOTO CELL
- 5D EXISTING SPRINKLER LIGHT (UNDERHUNG)
  NOTE: ITEM SHALL REMAIN DURING CONSTRUCTION.
- 5E EXISTING VISUAL FIRE ALARM (WALL MOUNT)
- 5F EXISTING MASTER ALARM BOX (RED BOX)
- 5G EXISTING BELL/ALARM
- 5H EXISTING TYPICAL SINGLE-GANG JUNCTION BOX-
  PROVIDE ACCESS PANEL (±9"x9") WITHIN METAL SOFFIT
- 5J EXISTING AREA LIGHT
- 5K EXISTING LIGHTING WALL PACK
- 5L EXISTING ENTRANCE LIGHT FIXTURE
- 5M EXISTING ELECTRONIC DOOR STRIKE WITH CONTROLS
- 5N EXISTING CARD READER
- 5P EXISTING KEYPAD LOCK
- 5Q EXISTING CONDUIT
- 5R EXISTING CONDUIT (UNDER OVERHANG)
- 5S EXISTING PULL BOX
- 5T EXISTING ELECTRICAL DISCONNECT
- 5U EXISTING PARKING LIGHTING
- 5V EXISTING KEYPAD SWITCH

NOTE: REFER TO GENERAL DEMOLITION NOTES FOR ADDITIONAL INFORMATION (TYPICAL THROUGHOUT)

(ELECTRICAL ITEMS TO BE REMOVED)

- 6A REMOVE EXISTING OVERHEAD DOOR CONTROLS AND ASSOCIATED ELECTRICAL EQUIPMENT BACK TO SOURCE. PROVIDE NEW CIRCUITRY TO MATCH MOTORIZED DOOR ELECTRICAL CHARACTERISTICS
- 6B REMOVE EXISTING POLICE CALL BOX (BLUE BOX) AND ASSOCIATED ELECTRICAL EQUIPMENT BACK TO SOURCE

NOTE: REFER TO GENERAL DEMOLITION NOTES FOR ADDITIONAL INFORMATION (TYPICAL THROUGHOUT)

SYMBOLS LEGEND

- TAG (MATERIAL/ITEM AS DESCRIBED- EXISTING)
- *TAG (EXISTING ITEMS TO BE PHOTOGRAPHED, REMOVED, CATALOGED, STORED AND REINSTALLED AS REQUIRED DUE TO DEMOLITION AND CONSTRUCTION OPERATIONS RELATED TO THE SCOPE OF WORK- COORDINATE WITH CONTRACTING OFFICER REPRESENTATIVE AS REQUIRED). NOT ALL MAY BE TAGGED AS THUS.
  NOTE: REFER TO DEMOLITION ELEVATIONS (AD-100 THRU AD-103) AND CONSTRUCTION ELEVATIONS (A-100 THRU A-103) FOR LOCATIONS OF APPLICABLE GENERAL BUILDING COMPONENTS, MECHANICAL ITEMS, AND/OR ELECTRICAL ITEMS.
  EXCEPTION: REINSTALLATION OF WINDOW AIR CONDITIONERS SHALL BE BY GOVERNMENT.
- TAG (MATERIAL/ITEM AS DESCRIBED- TO BE PROVIDED)

DOOR LEGEND

NOTE: TYPICAL DOOR LEGEND SHOWN HEREON- ALL MAY NOT BE APPLICABLE TO THIS PROJECT

209 A
DESCRIPTION:
±14'-0"W x ±12'-0"H INSULATED METAL COILING OVERHEAD DOOR, ELECTRIC MOTOR OPERATED.
PROVIDE ALL MOUNTING HARDWARE, TRIM, AND ACCESSORIES FOR A COMPLETE AND PROPER INSTALLATION.
REPLACEABLE PERIMETER WEATHERSTRIPPING, VISION PANELS, EXTERIOR LOCK AND INTERIOR HASP FOR PADLOCK.

209 B
DESCRIPTION:
3'-0"W x 7'-0"H GALVANIZED INSULATED HOLLOW METAL MANDOOR, AND FRAME.
HARDWARE:
(3) 4 1/2" x 4 1/2" HINGES WITH NRP, 2111 OR 5111
EXIT DEVICE (RIM MOUNTED)
EXTERIOR THUMB LATCH, WITH PULL HANDLE
CYLINDER CORE LOCK TO MATCH EXISTING BASE SYSTEM, AND KEYING
WEATHERSTRIPPING, R3y165
THRESHOLD, J36100
CLOSER WITH HOLD OPEN AND STOP, C02021

209 C
DESCRIPTION:
PAIR 3'-0"W x 7'-0"H GALVANIZED INSULATED HOLLOW METAL MANDOORS, AND FRAME.
HARDWARE:
(6) 4 1/2" x 4 1/2" HINGES WITH NRP, 2111 OR 5111
(2) VERTICAL ROD EXIT DEVICES WITH HEAD AND FLOOR KEEPERS
(1) EXTERIOR THUMB LATCH, WITH PULL HANDLE
(1) CYLINDER CORE LOCK TO MATCH EXISTING BASE SYSTEM AND KEYING
(1) WEATHERSTRIPPING, R3y165
(1) THRESHOLD, J36100
(1) ASTRAGAL
(2) CLOSERS, C02021

209 D
DESCRIPTION:
±9'-0"W x ±9'-0"H INSULATED METAL COILING OVERHEAD DOOR, ELECTRIC MOTOR OPERATED.
PROVIDE ALL MOUNTING HARDWARE, TRIM, AND ACCESSORIES FOR A COMPLETE AND PROPER INSTALLATION.
REPLACEABLE PERIMETER WEATHERSTRIPPING, VISION PANELS, EXTERIOR LOCK AND INTERIOR HASP FOR PADLOCK.

209 E
DESCRIPTION:
±8'-0"W x ±9'-0"H INSULATED METAL COILING OVERHEAD DOOR, ELECTRIC MOTOR OPERATED.
PROVIDE ALL MOUNTING HARDWARE, TRIM, AND ACCESSORIES FOR A COMPLETE AND PROPER INSTALLATION.
REPLACEABLE PERIMETER WEATHERSTRIPPING, VISION PANELS, EXTERIOR LOCK AND INTERIOR HASP FOR PADLOCK.

NOTE: PROVIDE ELECTRICAL SERVICES, POWER WIRING, TRANSFORMER, ETC. AT ALL EXISTING ELECTRONIC DOOR ACCESS LOCATIONS BEING REPLACED.

APPR	DATE	DESCRIPTION	SYM

NAVFAC

SEAL

Quad3
Architecture
Engineering
Environmental Services
37 North Washington Street
Wilkes-Barre, PA 18701
phone 570 829-4200
fax 570 829-3732
web www.quad3.com
A/E INFO

APPROVED

FOR COMMANDER NAVFAC

ACTIVITY
REPLACE SIDING- BLDGS 101, 102, 103, 104, 105, 113, 202, 204, 207, 209, 210, 211, 212, & 213
POC: DAVID A. RHOADS

SATISFACTORY TO DATE 05/04/10

DES	SS	DRW	CM	CHK	SS

PM/DM XXX/XXX
BRANCH MANAGER
CHIEF ENG/ARCH DAR
FIRE PROTECTION

NAVAL FACILITIES ENGINEERING COMMAND
NAVAL FACILITIES ENGINEERING COMMAND - MID-ATLANTIC
NAVAL STATION - NORFOLK, VIRGINIA
DEPARTMENT OF THE NAVY
NAVAL FACILITIES ENGINEERING COMMAND
NORTHEAST IPT
NAVAL SUPPORT ACTIVITY
MECHANICSBURG, PENNSYLVANIA
REPLACE SIDING - BLDGS 101, 102, 103, 104, 105, 113, 202, 204, 207, 209, 210, 211, 212, & 213
MATERIALS/ITEMS LEGEND AND NOTES

SCALE: AS NOTED
EPROJECT NO.: 811707
CONSTR. CONTR. NO. .
NAVFAC DRAWING NO. 12560423
SHEET 3 OF 18
A-002 | 209-10260

DRAWFORM REVISION: 10 MARCH 2009

FILE NAME: K:\10204.01\ARCH\Building 209\10204-209-A-002.dwg LAYOUT NAME: A-002 PLOTTED: Thursday, May 06, 2010 - 3:35pm USER: cmclaughlin

FLOOR PLAN - BUILDING 209

PLAN NORTH

SCALE: 1"=30'-0"

NOTES:

1. REFER TO DRAWING G-103 FOR INTERIOR PHOTOGRAPHS OF TYPICAL CONDITIONS AROUND THE PERIMETER OF THE BUILDING. THE PHOTOGRAPHS ARE INCLUDED TO DEPICT IN GENERAL THE EXISTING CONDITIONS, MATERIALS, AND EQUIPMENT ETC. TO BE REMOVED AND/OR REINSTALLED WITHIN EACH BAY. THEY ARE INTENDED TO PROVIDE INFORMATION FOR BIDDING PURPOSES. SOME BAYS MAY HAVE MORE, SOME LESS, NOT ALL ARE SHOWN. FOR BIDDING PURPOSES ASSUME ALL BAYS THE SAME, ANY BAYS WITH ADDITIONAL OR FEWER MATERIALS AND EQUIPMENT WILL BE ADDRESSED AS APPROPRIATE WITH AN ADD OR DEDUCT CHANGE ORDER.
   EACH BIDDER SHALL VISIT THE SITE AND VERIFY EXISTING CONDITIONS, TO THEIR SATISFACTION PRIOR TO SUBMITTING A BID.
2. THE OVERALL BUILDING FLOOR PLAN IDENTIFIES OPENINGS AND PARTITIONS, ETC. OBSERVED DURING DESIGN.
   THE GOVERNMENT HAS ONGOING PROJECTS, AND THE PLANS MAY CHANGE FROM THAT SHOWN, MORE SPECIFICALLY WITH RACKS OF STORED MATERIALS WITHIN. ANY AND ALL STORED MATERIALS ADJACENT TO EXTERIOR WALLS WILL BE REMOVED AND REINSTALLED FOR CONSTRUCTION BY THE GOVERMENT. STORED MATERIALS AND RACKING ARE NOT SHOWN ON PLANS. THE GOVERNMENT STRICTLY PROHIBITS ANY PHOTOGRAPHING OF SAID ITEMS DUE TO SECURITY REGULATIONS.
3. DRAWING G-100 OVERALL BUILDING FLOOR PLAN AND EXTERIOR ELEVATIONS ARE DIAGRAMMATIC IN NATURE AND ARE INCLUDED FOR REFERENCE PURPOSES ONLY. REFER TO DRAWINGS AD-100 THRU AD-103 AND A-100 THRU A-103 FOR LARGE SCALE PARTIAL PLANS AND EXTERIOR ELEVATIONS FOR ADDITIONAL INFORMATION NOT SHOWN HEREON TYPICAL THROUGHOUT.

SOUTH ELEVATION - BUILDING 209

SCALE: 1"=30'-0" G-100 (1)

EAST ELEVATION - BUILDING 209

SCALE: 1"=30'-0" G-100 (2)

NORTH ELEVATION - BUILDING 209

SCALE: 1"=30'-0" G-100 (3)

WEST ELEVATION - BUILDING 209

SCALE: 1"=30'-0" G-100 (4)

CHECK AND VERIFY ALL DIMENSIONS AND EXISTING CONDITIONS AT THE SITE.

KEY PLAN

PLAN NORTH

NOT TO SCALE

GRAPHIC SCALE

CHECK GRAPHIC SCALES BEFORE USING

0 15' 30' 45' 60' 90'

SCALE: 1"=30'-0"

SYM	DESCRIPTION	DATE	APPR

NAVFAC

REGISTERED ARCHITECT PENNSYLVANIA JOHN C. COWDER No. EX 7918 — SEAL

Quad3
Architecture Engineering Environmental Services
37 North Washington Street
Wilkes-Barre, PA 18701
phone 570 829-4200
fax 570 829-3732
web www.quad3.com
A/E INFO

APPROVED

FOR COMMANDER NAVFAC

ACTIVITY: REPLACE SIDING– BLDGS 101, 102, 103, 104, 105, 113, 202, 204, 207, 209, 210, 211, 212, & 213 POC: DAVID A. RHOADS

SATISFACTORY TO DATE 05/04/10

DES SS DRW CM CHK SS

PM/DM XXX/XXX

BRANCH MANAGER

CHIEF ENG/ARCH DAR

FIRE PROTECTION

DEPARTMENT OF THE NAVY
NAVAL FACILITIES ENGINEERING COMMAND
NAVAL FACILITIES ENGINEERING COMMAND ~ MID-ATLANTIC
NORTHEAST IPT NAVAL STATION – NORFOLK, VIRGINIA
NAVAL SUPPORT ACTIVITY MECHANICSBURG, PENNSYLVANIA

REPLACE SIDING - BLDGS 101, 102, 103, 104, 105, 113, 202, 204, 207, 209, 210, 211, 212, & 213

PHOTO LAYOUTS AND ELEVATIONS – BUILDING 209

SCALE: AS NOTED

EPROJECT NO.: 811707

CONSTR. CONTR. NO.

NAVFAC DRAWING NO. 12560424

SHEET 4 OF 18

G-100 209-10261

DRAWFORM REVISION: 10 MARCH 2009

FILE NAME: K:\10204.01\ARCH\Building 209\10204-209-G-100.dwg LAYOUT NAME: G-100 PLOTTED: Thursday, May 06, 2010 – 3:35pm USER: cmclaughlin

NORTH ELEVATION
SCALE: NOT TO SCALE G-100 (1)

NORTH ELEVATION
SCALE: NOT TO SCALE G-100 (2)

NORTH ELEVATION
SCALE: NOT TO SCALE G-100 (3)

WEST ELEVATION
SCALE: NOT TO SCALE G-100 (4)

WEST ELEVATION
SCALE: NOT TO SCALE G-100 (5)

WEST ELEVATION
SCALE: NOT TO SCALE G-100 (6)

PHOTOGRAPHS SHOWN OF EXTERIOR ELEVATIONS

APPR | DATE | DESCRIPTION | SYM

NAVFAC

Quad3
Architecture
Engineering
Environmental Services
37 North Washington Street
Wilkes-Barre, PA 18701
phone 570 829-4200
fax 570 829-3732
web www.quad3.com
A/E INFO

APPROVED
FOR COMMANDER NAVFAC

ACTIVITY
REPLACE SIDING- BLDGS 101, 102, 103, 104, 105, 113, 202, 204, 207, 209, 210, 211, 212, & 213
POC: DAVID A. RHOADS

SATISFACTORY TO | DATE 05/04/10

DES	DRW	CHK
SS	CM	SS

PM/DM XXX/XXX
BRANCH MANAGER
CHIEF ENG/ARCH DAR
FIRE PROTECTION

DEPARTMENT OF THE NAVY
NAVAL FACILITIES ENGINEERING COMMAND
NORTHEAST IPT
NAVAL FACILITIES ENGINEERING COMMAND – MID-ATLANTIC
NAVAL STATION – NORFOLK, VIRGINIA
NAVAL SUPPORT ACTIVITY
MECHANICSBURG, PENNSYLVANIA
REPLACE SIDING - BLDGS 101, 102, 103, 104, 105, 113, 202, 204, 207, 209, 210, 211, 212, & 213
PHOTOGRAPHS – BUILDING 209

SCALE: AS NOTED
EPROJECT NO.: 811707
CONSTR. CONTR. NO. .
NAVFAC DRAWING NO. 12560425
SHEET 5 OF 18
G-101 | 209-10262

DRAWFORM REVISION: 10 MARCH 2009

FILE NAME: K:\10204.01\ARCH\Building 209\10204-209-G-101.dwg LAYOUT NAME: G-101 PLOTTED: Thursday, May 06, 2010 - 3:34pm USER: cmcloughlin

SOUTH ELEVATION
SCALE: NOT TO SCALE G-100 (1)

SOUTH ELEVATION
SCALE: NOT TO SCALE G-100 (2)

SOUTH ELEVATION
SCALE: NOT TO SCALE G-100 (3)

EAST ELEVATION
SCALE: NOT TO SCALE G-100 (4)

EAST ELEVATION
SCALE: NOT TO SCALE G-100 (5)

EAST ELEVATION
SCALE: NOT TO SCALE G-100 (6)

PHOTOGRAPHS SHOWN OF EXTERIOR ELEVATIONS

APPR	DATE	SYM	DESCRIPTION

NAVFAC

REGISTERED ARCHITECT COMMONWEALTH OF PENNSYLVANIA CHARLES E. COWDER No. RA-012736 SEAL

Quad3
Architecture
Engineering
Environmental Services
37 North Washington Street
Wilkes-Barre, PA 18701
phone 570 829-4200
fax 570 829-3732
web www.quad3.com
A/E INFO

APPROVED

FOR COMMANDER NAVFAC

ACTIVITY
REPLACE SIDING- BLDGS 101, 102, 103, 104, 105, 113, 202, 204, 207, 209, 210, 211, 212, & 213
POC: DAVID A. RHOADS

SATISFACTORY TO DATE 05/04/10

DES	DRW	CHK
SS	CM	SS

PM/DM XXX/XXX
BRANCH MANAGER
CHIEF ENG/ARCH DAR
FIRE PROTECTION

DEPARTMENT OF THE NAVY
NAVAL FACILITIES ENGINEERING COMMAND
NORTHEAST IPT

NAVAL FACILITIES ENGINEERING COMMAND – MID-ATLANTIC
NAVAL STATION – NORFOLK, VIRGINIA

NAVAL SUPPORT ACTIVITY
MECHANICSBURG, PENNSYLVANIA

REPLACE SIDING - BLDGS 101, 102, 103, 104, 105, 113, 202, 204, 207, 209, 210, 211, 212, & 213

PHOTOGRAPHS – BUILDING 209

SCALE: AS NOTED
EPROJECT NO.: 811707
CONSTR. CONTR. NO. .
NAVFAC DRAWING NO. 12560426
SHEET 6 OF 18

G-102 | 209-10263

DRAWFORM REVISION: 10 MARCH 2009

FILE NAME: K:\10204.01\ARCH\Building 209\10204-209-G-102.dwg LAYOUT NAME: G-102 PLOTTED: Thursday, May 06, 2010 - 3:32pm USER: cmcloughlin

INTERIOR ELEVATION
SCALE: NOT TO SCALE G-100 1

INTERIOR ELEVATION
SCALE: NOT TO SCALE G-100 2

INTERIOR ELEVATION
SCALE: NOT TO SCALE G-100 3

INTERIOR ELEVATION
SCALE: NOT TO SCALE G-100 4

INTERIOR ELEVATION
SCALE: NOT TO SCALE G-100 5

INTERIOR ELEVATION
SCALE: NOT TO SCALE G-100 6

PHOTOGRAPHS SHOWN OF INTERIOR ELEVATIONS

APPR | DATE | DESCRIPTION | SYM

NAVFAC

REGISTERED ARCHITECT COMMONWEALTH OF PENNSYLVANIA JOHN L. CROWDER No. RA-027873 SEAL

Quad3 Architecture Engineering Environmental Services
37 North Washington Street
Wilkes-Barre, PA 18701
phone 570 829-4200
fax 570 829-3732
web www.quad3.com
A/E INFO

APPROVED
FOR COMMANDER NAVFAC

ACTIVITY
REPLACE SIDING- BLDGS 101, 102, 103, 104, 105, 113, 202, 204, 207, 209, 210, 211, 212, & 213
POC: DAVID A. RHOADS

SATISFACTORY TO DATE 05/04/10

DES	DRW	CHK
SS	CM	SS

PM/DM XXX/XXX
BRANCH MANAGER
CHIEF ENG/ARCH DAR
FIRE PROTECTION

DEPARTMENT OF THE NAVY
NAVAL FACILITIES ENGINEERING COMMAND
NORTHEAST IPT
NAVAL FACILITIES ENGINEERING COMMAND – MID-ATLANTIC
NAVAL STATION – NORFOLK, VIRGINIA
NAVAL SUPPORT ACTIVITY
MECHANICSBURG, PENNSYLVANIA
REPLACE SIDING - BLDGS 101, 102, 103, 104, 105, 113, 202, 204, 207, 209, 210, 211, 212, & 213
PHOTOGRAPHS – BUILDING 209

SCALE: AS NOTED
EPROJECT NO.: 811707
CONSTR. CONTR. NO. .
NAVFAC DRAWING NO. 12560427
SHEET 7 OF 18
G-103 209-10264

DRAWFORM REVISION: 10 MARCH 2009

FILE NAME: K:\10204.01\ARCH\Building 209\10204-209-G-103.dwg LAYOUT NAME: G-103 PLOTTED: Thursday, May 06, 2010 - 3:30pm USER: cmcloughlin

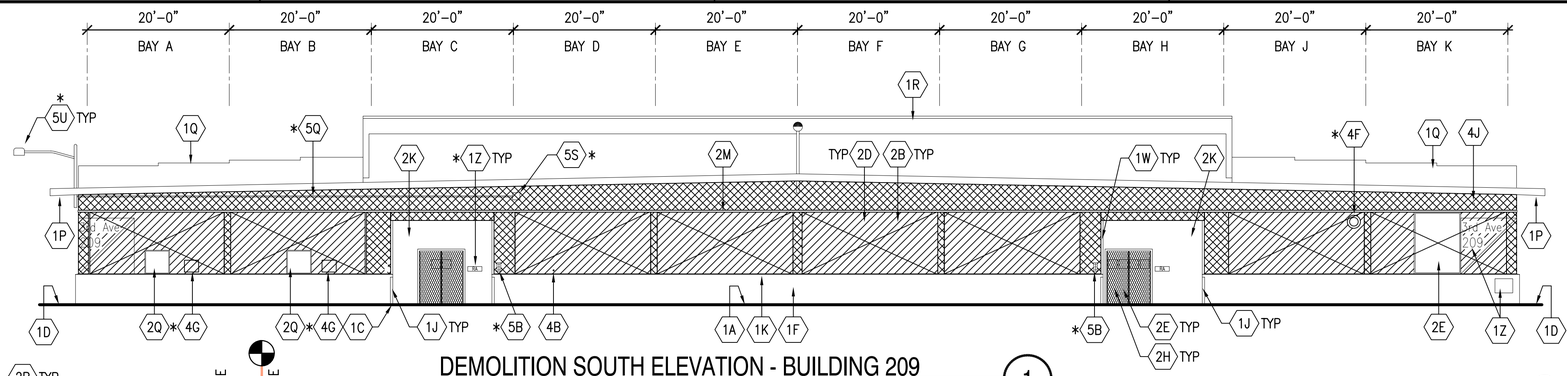

DEMOLITION SOUTH ELEVATION - BUILDING 209

SCALE: 3/32"=1'-0" AD-100 (1)

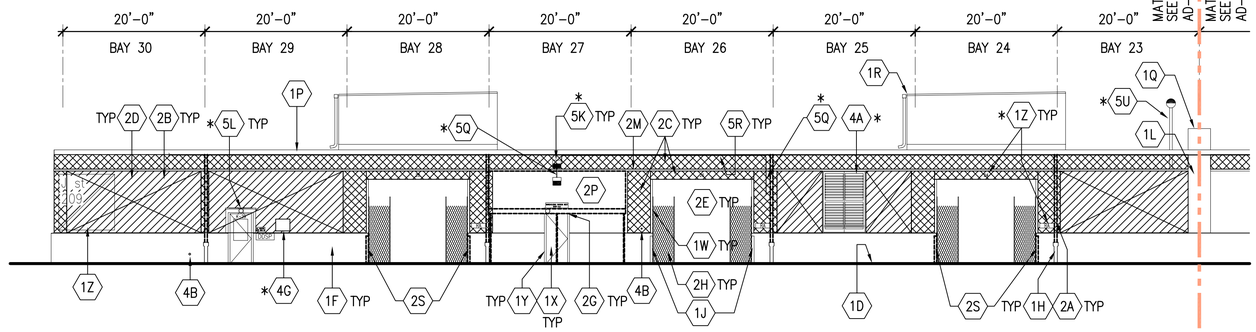

PARTIAL DEMOLITION EAST ELEVATION - BUILDING 209

SCALE: 3/32"=1'-0" AD-100 (2)

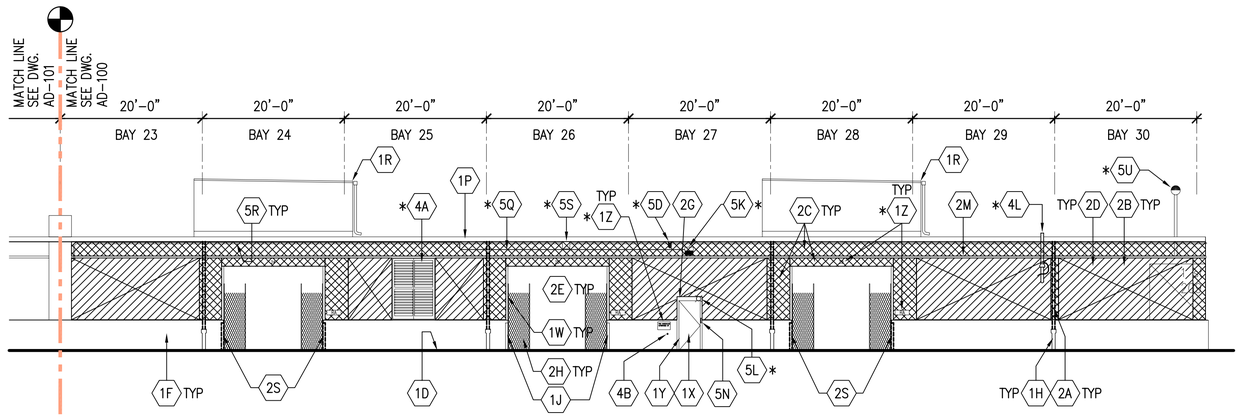

PARTIAL DEMOLITION WEST ELEVATION - BUILDING 209

SCALE: 3/32"=1'-0" AD-101 (3)

GENERAL LEAD HAZARD NOTES (AS APPLICABLE)

DISTURBANCE OF LEAD CONTAINING SURFACE COATINGS (FOR DRAWINGS AD-100 THRU AD-103):

1. WORK PERFORMED UNDER THIS CONTRACT AS DESCRIBED IN THE SPECIFICATIONS AND DRAWINGS MAY CAUSE THE DISTURBANCE OF LEAD CONTAINING SURFACE COATINGS. THE OCCUPATIONAL SAFETY AND HEALTH ADMINISTRATION (OSHA) REGULATES WORKER EXPOSURE AND HAS ASSIGNED A LEAD PERMISSIBLE EXPOSURE LIMIT (PEL) OF 50 MICROGRAMS PER CUBIC METER AND AN ACTION LEVEL OF 30 MICROGRAMS PER CUBIC METER AS AN 8 HOUR TIME WEIGHTED AVERAGE.

2. CONTRACTORS SHALL ASSUME ALL RISKS IN WORKER EXPOSURE TO LEAD IN SURFACE COATINGS AND MAY RELY ON PREVIOUS AIR SAMPLING INFORMATION OBTAINED FROM SIMILAR WORK USING SAME WORK PRACTICES. CONTRACTORS SHALL MAKE THEIR OWN EXPOSURE ASSESSMENT OF LEAD IN SURFACE COATINGS AND CORRESPONDING WORK PRACTICE FOR DISTURBANCE OF LEAD COATINGS.

3. CONTRACTORS SHALL ENSURE WORK AREAS AND AREAS BEYOND WORK AREA ARE NOT CONTAMINATED AS A RESULT OF WORK BEING PERFORMED.

4. CONTRACTORS SHALL BE SOLY RESPONSIBLE FOR THE HEALTH AND SAFETY OF ITS WORKERS DURING THE EXECUTION OF THIS CONTRACT. WORK SHALL BE CONDUCTED UNDER THE ASSUMPTION THAT ALL SURFACE COATINGS CONTAIN LEAD AND, IN ACCORDANCE WITH ALL APPLICABLE LOCAL, STATE AND FEDERAL REGULATIONS, BUT NOT LIMITED TO, 29 CFR 1926.62 LEAD EXPOSURE IN CONSTRUCTION, 1926.103 AND 1910.134 RESPIRATORY PROTECTION, AND U.S. EPA AND PA DEP REGULATIONS APPLICABLE TO THIS WORK EFFORT. THESE REGULATIONS SHALL BE BINDING UPON CONTRACTOR AND CONSIDERED PART OF THE CONTRACT. THE METHODS USED TO HANDLE THESE MATERIALS AND PRECAUTIONS TAKEN SHALL BE DETERMINED BY THE CONTRACTOR AND RESPONSIBILITY FOR USE OF SUCH METHODS SHALL BE SOLY WITH THE CONTRACTOR. THE CONTRACTOR, HOWEVER, SHALL BE REQUIRED TO USE ACCEPTED "STATE-OF-THE-ART" METHODS

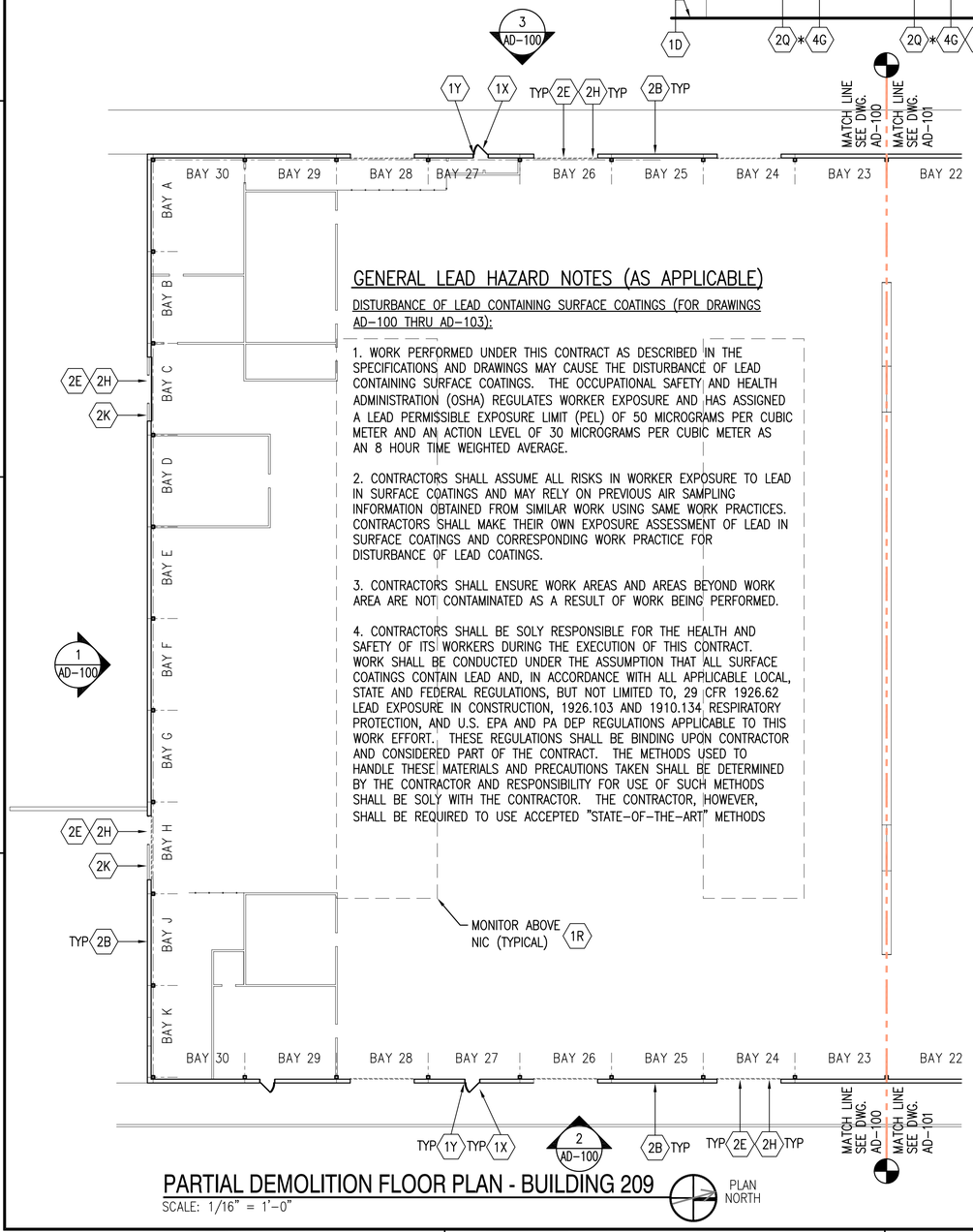

PARTIAL DEMOLITION FLOOR PLAN - BUILDING 209

SCALE: 1/16" = 1'-0" PLAN NORTH

CHECK AND VERIFY ALL DIMENSIONS AND EXISTING CONDITIONS AT THE SITE.

KEY PLAN

NOT TO SCALE

AD-100 | AD-101 | AD-102 | AD-103

GRAPHIC SCALE

CHECK GRAPHIC SCALES BEFORE USING

0 8' 16' 24' 32' 40' 48'

SCALE: 1/16"=1'-0"

0 2' 4' 8' 12' 16' 20' 24' 28' 32'

SCALE: 3/32"=1'-0"

APPR | DATE | DESCRIPTION | SYM

NAVFAC

REGISTERED ARCHITECT COMMONWEALTH OF PENNSYLVANIA JOHN C. DOUDRICK No. RA-013736 SEAL

Quad3 Architecture Engineering Environmental Services
37 North Washington Street
Wilkes-Barre, PA 18701
phone 570 829-4200
fax 570 829-3732
web www.quad3.com
A/E INFO

APPROVED

FOR COMMANDER NAVFAC

ACTIVITY
REPLACE SIDING- BLDGS 101, 102, 103, 104, 105, 113, 202, 204, 207, 209, 210, 211, 212, & 213
POC: DAVID A. RHOADES

SATISFACTORY TO DATE 05/04/10

DES	AD	DRW	CM	CHK	AD

PM/DM XXX/XXX
BRANCH MANAGER
CHIEF ENG/ARCH DAR
FIRE PROTECTION

DEPARTMENT OF THE NAVY
NAVAL FACILITIES ENGINEERING COMMAND
NORTHEAST IPT

NAVAL FACILITIES ENGINEERING COMMAND ~ MID-ATLANTIC
NAVAL STATION ~ NORFOLK, VIRGINIA

NAVAL SUPPORT ACTIVITY
MECHANICSBURG, PENNSYLVANIA

REPLACE SIDING - BLDGS 101, 102, 103, 104, 105, 113, 202, 204, 207, 209, 210, 211, 212, & 213

PARTIAL DEMOLITION FLOOR PLAN AND ELEVATIONS ~ BUILDING 209

SCALE:	AS NOTED
EPROJECT NO.:	811707
CONSTR. CONTR. NO.	.
NAVFAC DRAWING NO.	12560428
SHEET	8 OF 18

AD-100 | 209-10265

DRAWFORM REVISION: 10 MARCH 2009

FILE NAME: K:\10204.01\ARCH\Building 209\10204-209-AD-100.dwg LAYOUT NAME: AD-100 PLOTTED: Friday, May 07, 2010 - 10:20am USER: cmclaughlin

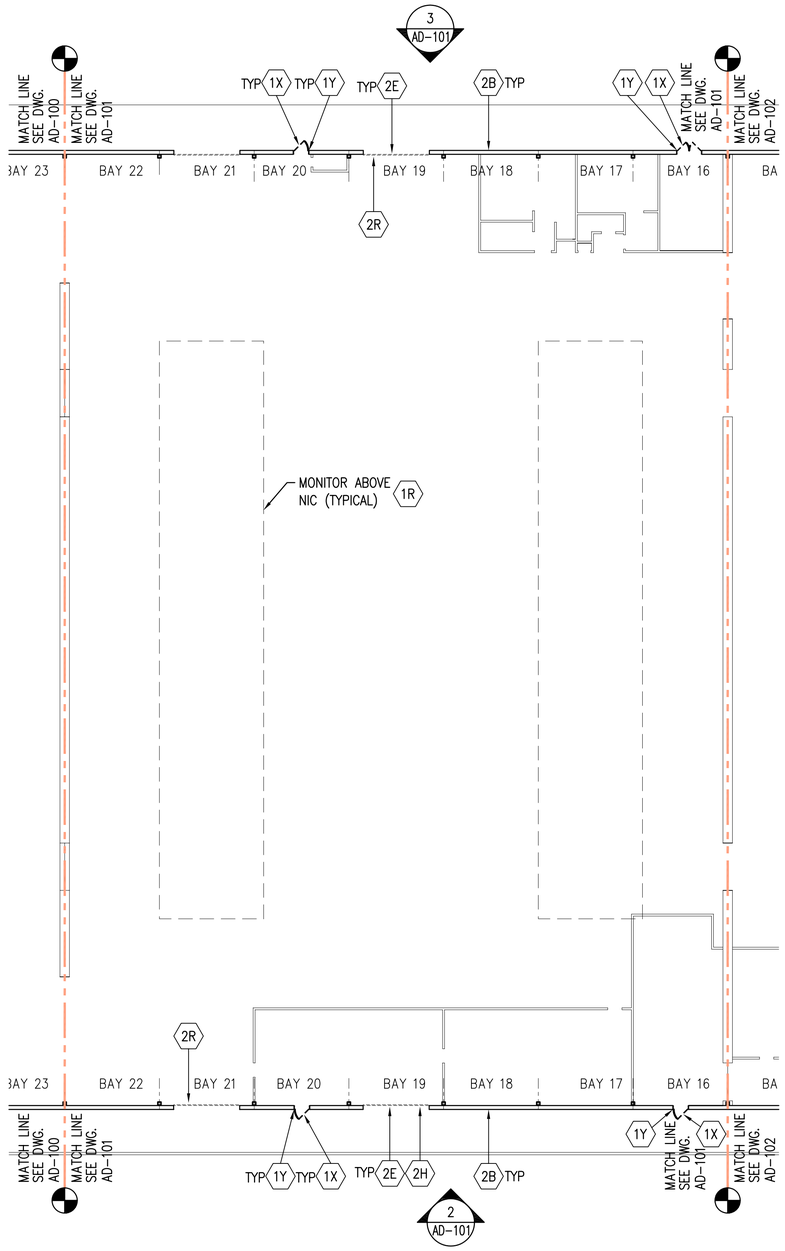

PARTIAL DEMOLITION FLOOR PLAN - BUILDING 209

SCALE: 1/16" = 1'-0"

PLAN NORTH

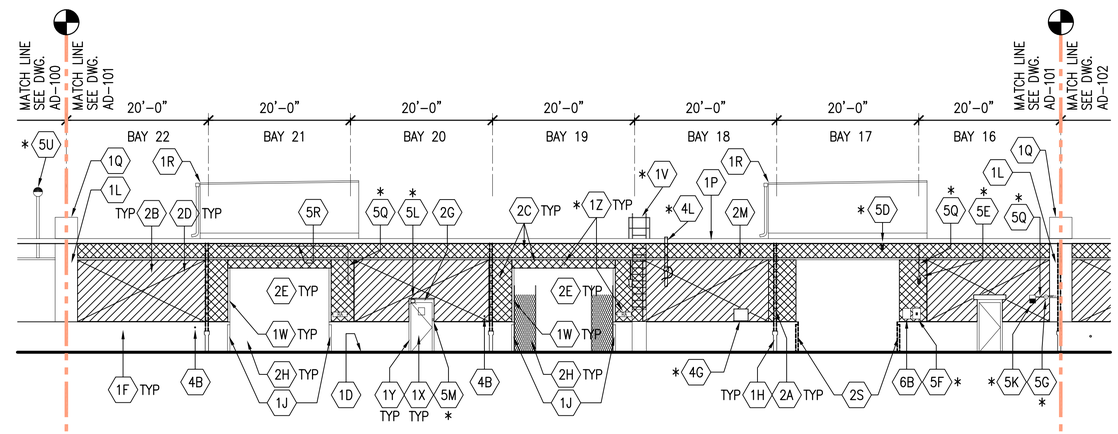

PARTIAL DEMOLITION EAST ELEVATION - BUILDING 209 (1)

SCALE: 3/32"=1'-0" AD-101

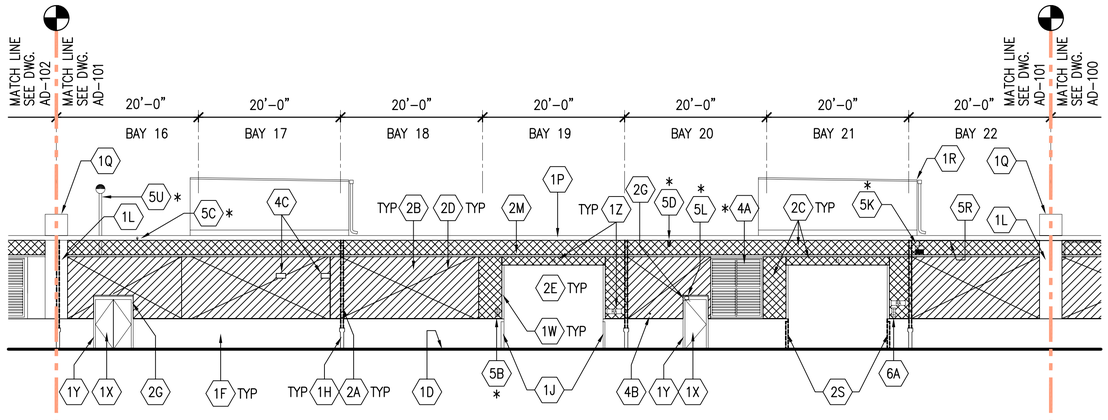

PARTIAL DEMOLITION WEST ELEVATION - BUILDING 209 (2)

SCALE: 3/32"=1'-0" AD-101

CHECK AND VERIFY ALL DIMENSIONS AND EXISTING CONDITIONS AT THE SITE.

KEY PLAN

NOT TO SCALE

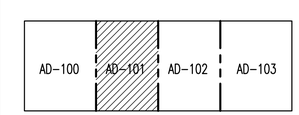

GRAPHIC SCALE

CHECK GRAPHIC SCALES BEFORE USING

0 8' 16' 24' 32' 40' 48'

SCALE: 1/16"=1'-0"

0 2' 4' 8' 12' 16' 20' 24' 28' 32'

SCALE: 3/32"=1'-0"

SYM	DESCRIPTION	DATE	APPR

NAVFAC

NHOI REGISTERED ARCHITECT PENNSYLVANIA C. COWDER No. EX 7918

SEAL

Quad3 Architecture Engineering Environmental Services

37 North Washington Street
Wilkes-Barre, PA 18701

phone 570 829-4200
fax 570 829-3732
web www.quad3.com

A/E INFO

APPROVED

FOR COMMANDER NAVFAC

ACTIVITY
REPLACE SIDING- BLDGS 101, 102, 103, 104, 105, 113, 202, 204, 207, 209, 210, 211, 212, & 213
POC: DAVID A. RHOADS

SATISFACTORY TO DATE 05/04/10

DES SS DRW CM CHK SS

PM/DM XXX/XXX

BRANCH MANAGER

CHIEF ENG/ARCH DAR

FIRE PROTECTION

DEPARTMENT OF THE NAVY
NAVAL FACILITIES ENGINEERING COMMAND ~ MID-ATLANTIC
NORTHEAST IPT NAVAL STATION - NORFOLK, VIRGINIA

NAVAL SUPPORT ACTIVITY MECHANICSBURG, PENNSYLVANIA
REPLACE SIDING - BLDGS 101, 102, 103, 104, 105, 113, 202, 204, 207, 209, 210, 211, 212, & 213

PARTIAL DEMOLITION FLOOR PLAN AND ELEVATIONS - BUILDING 209

SCALE: AS NOTED

EPROJECT NO.: 811707

CONSTR. CONTR. NO.: .

NAVFAC DRAWING NO. 12560429

SHEET 9 OF 18

AD-101 | 209-10266

DRAWFORM REVISION: 10 MARCH 2009

FILE NAME: K:\10204.01\ARCH\Building 209\10204-209-AD-101.dwg LAYOUT NAME: AD-101 PLOTTED: Thursday, May 06, 2010 - 3:29pm USER: cmclaughlin

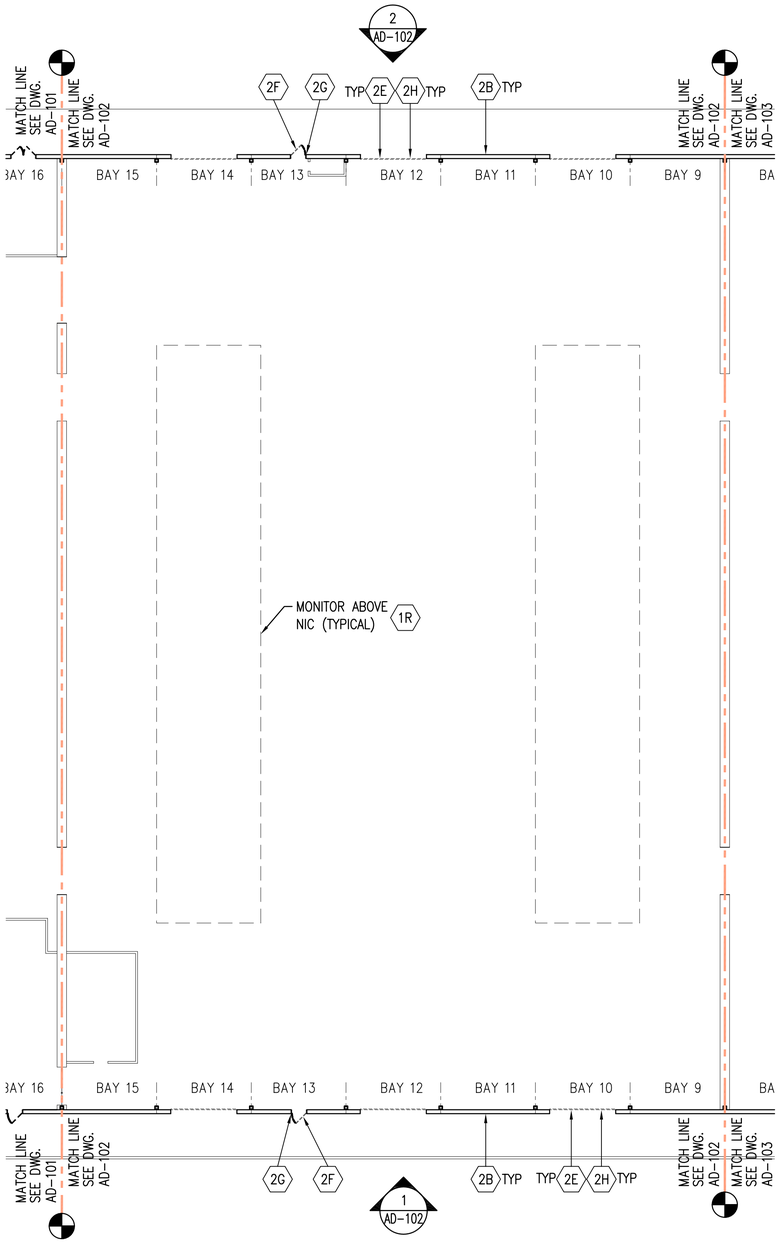

PARTIAL DEMOLITION FLOOR PLAN - BUILDING 209

SCALE: 1/16" = 1'–0"

PLAN NORTH

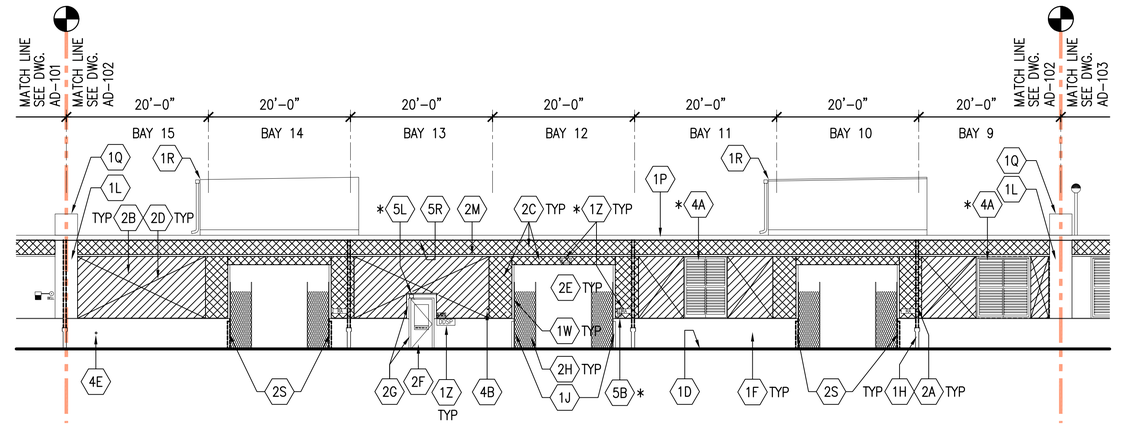

PARTIAL DEMOLITION EAST ELEVATION - BUILDING 209

SCALE: 3/32"=1'–0"

AD–102

1

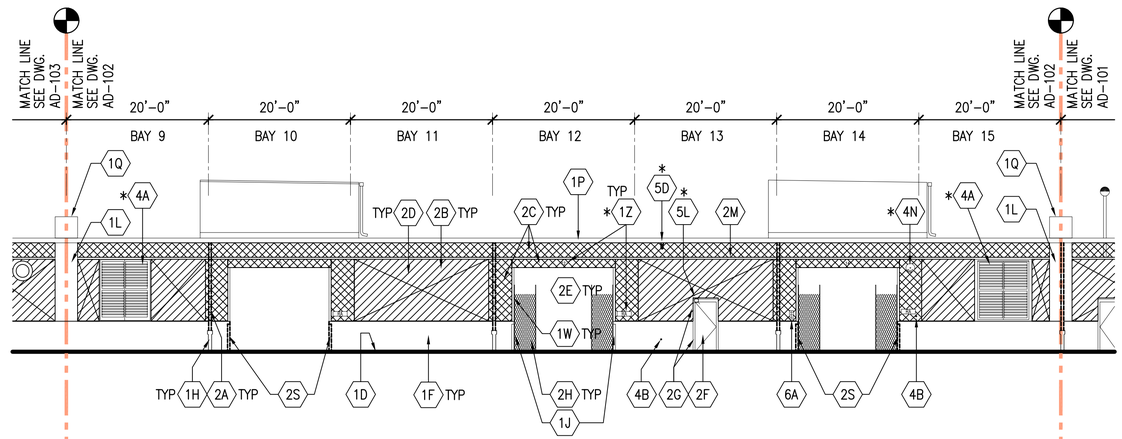

PARTIAL DEMOLITION WEST ELEVATION - BUILDING 209

SCALE: 3/32"=1'–0"

AD–102

2

CHECK AND VERIFY ALL DIMENSIONS AND EXISTING CONDITIONS AT THE SITE.

KEY PLAN

NOT TO SCALE

AD–100 | AD–101 | AD–102 | AD–103

GRAPHIC SCALE

CHECK GRAPHIC SCALES BEFORE USING

0 8' 16' 24' 32' 40' 48'

SCALE: 1/16"=1'–0"

0 2' 4' 8' 12' 16' 20' 24' 28' 32'

SCALE: 3/32"=1'–0"

APPR	DATE	DESCRIPTION	SYM

NAVFAC

NICHOLAS R. COWDER No. CX 073838 REGISTERED ARCHITECT PENNSYLVANIA

SEAL

Quad3
Architecture
Engineering
Environmental Services
37 North Washington Street
Wilkes-Barre, PA 18701
phone 570 829-4200
fax 570 829-3732
web www.quad3.com
A/E INFO

APPROVED

FOR COMMANDER NAVFAC

ACTIVITY
REPLACE SIDING– BLDGS 101, 102, 103, 104, 105, 113, 202, 204, 207, 209, 210, 211, 212, & 213
POC: DAVID A. RHOADS

SATISFACTORY TO DATE 05/04/10

DES SS | DRW CM | CHK SS

PM/DM XXX/XXX

BRANCH MANAGER

CHIEF ENG/ARCH DAR

FIRE PROTECTION

DEPARTMENT OF THE NAVY
NAVAL FACILITIES ENGINEERING COMMAND
NORTHEAST IPT

NAVAL FACILITIES ENGINEERING COMMAND – MID-ATLANTIC
NAVAL STATION – NORFOLK, VIRGINIA

NAVAL SUPPORT ACTIVITY
MECHANICSBURG, PENNSYLVANIA

REPLACE SIDING - BLDGS 101, 102, 103, 104, 105, 113, 202, 204, 207, 209, 210, 211, 212, & 213

PARTIAL DEMOLITION FLOOR PLAN AND ELEVATIONS – BUILDING 209

SCALE: AS NOTED

EPROJECT NO.: 811707

CONSTR. CONTR. NO.

NAVFAC DRAWING NO.
12560430

SHEET 10 OF 18

AD-102 | 209-10267

DRAWFORM REVISION: 10 MARCH 2009

FILE NAME: K:\10204-01\ARCH\Building 209\10204-209-AD-102.dwg LAYOUT NAME: AD-102 PLOTTED: Thursday, May 06, 2010 - 3:29pm USER: cmcdoughlin

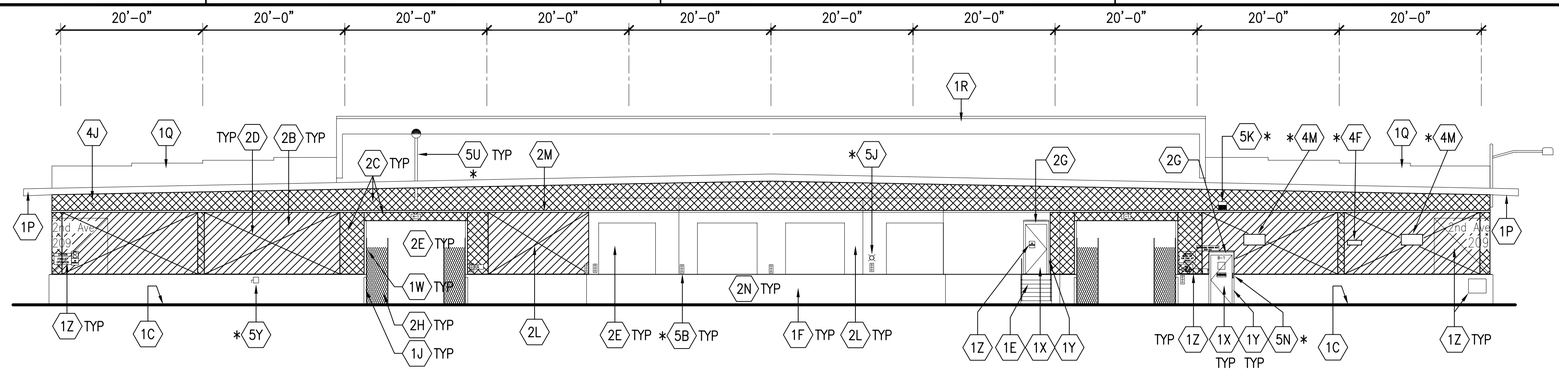

DEMOLITION NORTH ELEVATION - BUILDING 209

SCALE: 3/32"=1'-0" AD-103 (1)

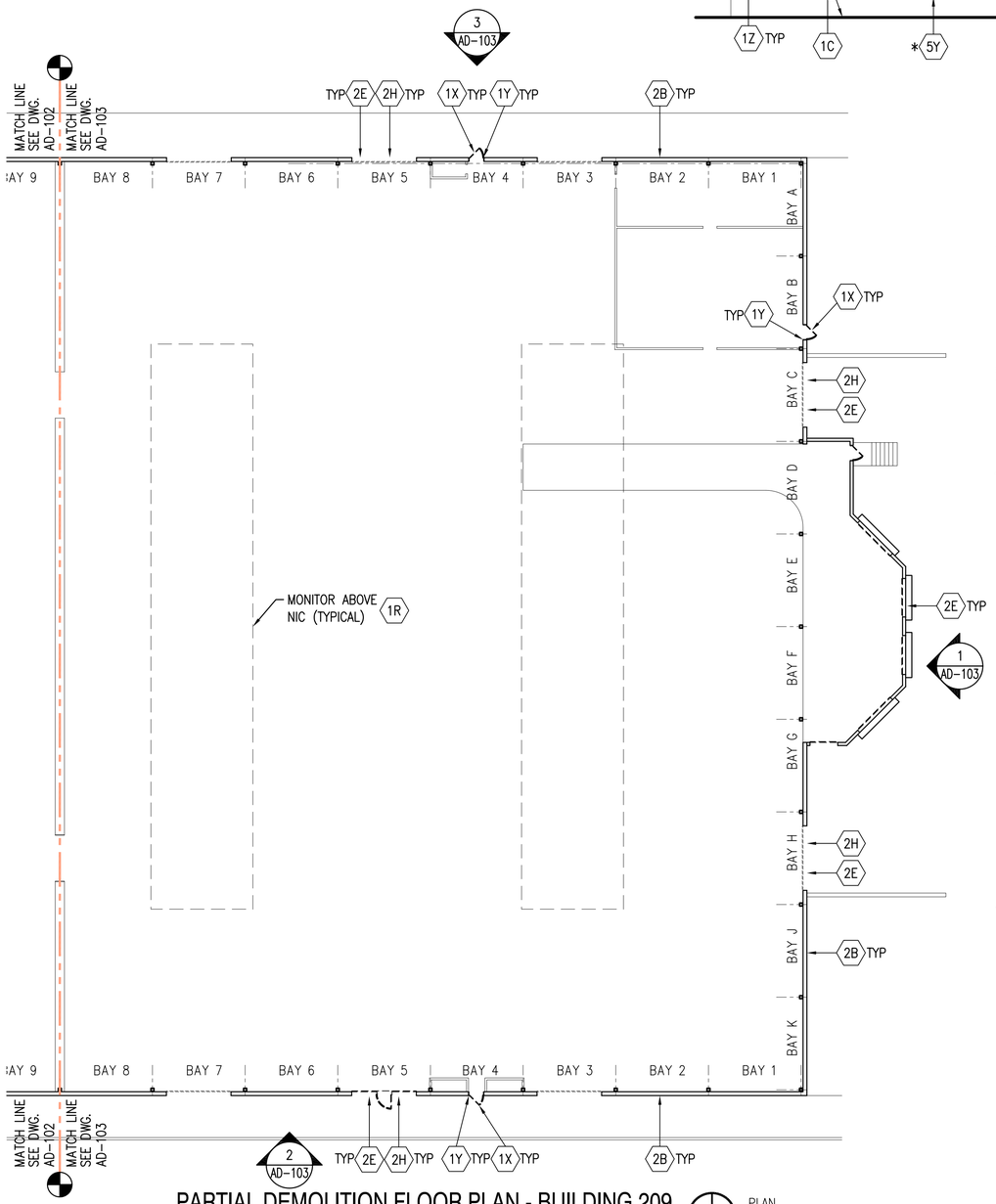

PARTIAL DEMOLITION FLOOR PLAN - BUILDING 209

SCALE: 1/16" = 1'-0"

PLAN NORTH

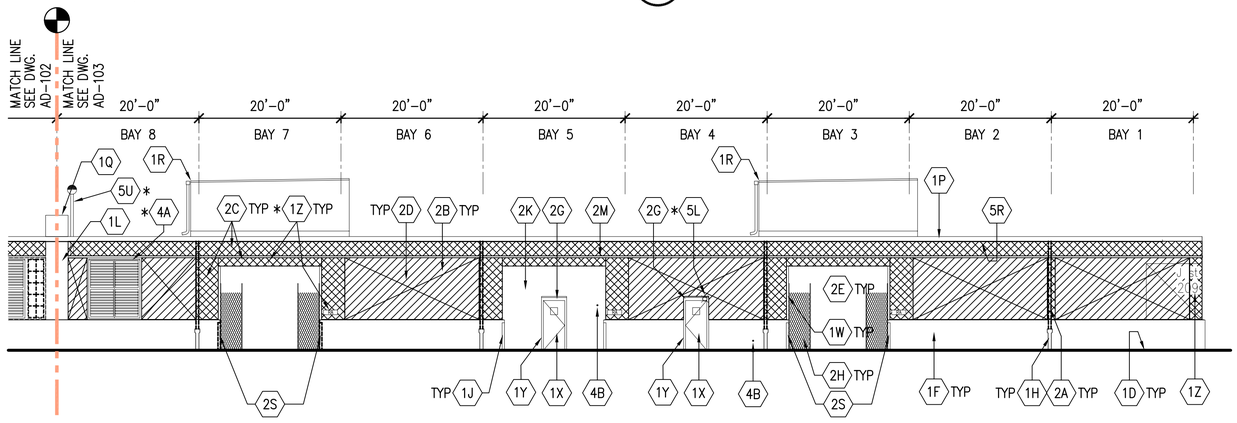

PARTIAL DEMOLITION EAST ELEVATION - BUILDING 209

SCALE: 3/32"=1'-0" AD-103 (2)

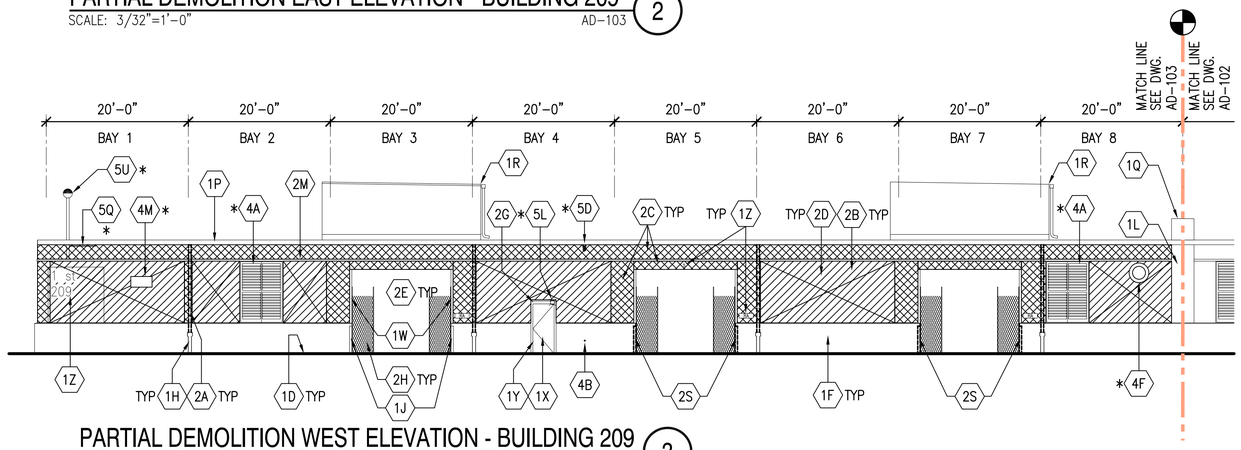

PARTIAL DEMOLITION WEST ELEVATION - BUILDING 209

SCALE: 3/32"=1'-0" AD-103 (3)

KEY PLAN

NOT TO SCALE

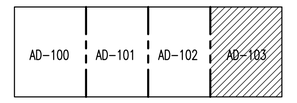

GRAPHIC SCALE

CHECK GRAPHIC SCALES BEFORE USING

0 8' 16' 24' 32' 40' 48'

SCALE: 1/16"=1'-0"

0 2' 4' 8' 12' 16' 20' 24' 28' 32'

SCALE: 3/32"=1'-0"

CHECK AND VERIFY ALL DIMENSIONS AND EXISTING CONDITIONS AT THE SITE.

APPR | DATE | DESCRIPTION | SYM

NAVFAC

REGISTERED ARCHITECT COMMONWEALTH OF PENNSYLVANIA JOHN R. CUMMINGS JR. No. RA-012579 SEAL

Quad3
Architecture
Engineering
Environmental Services
37 North Washington Street
Wilkes-Barre, PA 18701
phone 570 829-4200
fax 570 829-3732
web www.quad3.com
A/E INFO

APPROVED

FOR COMMANDER NAVFAC

ACTIVITY
REPLACE SIDING- BLDGS 101, 102, 103, 104, 105, 113, 202, 204, 207, 209, 210, 211, 212, & 213
POC: DAVID A. RHOADS

SATISFACTORY TO DATE 05/04/10

DES	SS	DRW	CM	CHK	SS

PM/DM XXX/XXX

BRANCH MANAGER

CHIEF ENG/ARCH DAR

FIRE PROTECTION

DEPARTMENT OF THE NAVY
NAVAL FACILITIES ENGINEERING COMMAND
NORTHEAST IPT

NAVAL FACILITIES ENGINEERING COMMAND – MID-ATLANTIC
NAVAL STATION – NORFOLK, VIRGINIA

NAVAL SUPPORT ACTIVITY
MECHANICSBURG, PENNSYLVANIA

REPLACE SIDING - BLDGS 101, 102, 103, 104, 105, 113, 202, 204, 207, 209, 210, 211, 212, & 213

PARTIAL DEMOLITION FLOOR PLAN AND ELEVATIONS – BUILDING 209

SCALE: AS NOTED
EPROJECT NO.: 811707
CONSTR. CONTR. NO.: -
NAVFAC DRAWING NO. 12560431
SHEET 11 OF 18

AD-103 | 209-10268

DRAWFORM REVISION: 10 MARCH 2009

FILE NAME: K:\10204.01\ARCH\Building 209\10204-209-AD-103.dwg LAYOUT NAME: AD-103 PLOTTED: Thursday, May 06, 2010 - 3:28pm USER: cmcloughlin

NOTES:
1. STREET: UPPER AND LOWER CASE, HELVETICA MEDIUM, 12" CAPITAL LETTER HEIGHT.
2. BUILDING NO.: HELVETICA MEDIUM, 12" NUMBER HEIGHT.
3. MESSAGE LETTERING: BLACK.
4. PROVIDE SIGNAGE AT BUILDING CORNERS AS INDICATED ON ELEVATIONS. COORDINATE ALL TEXT AND MOUNTING LOCATIONS WITH COR TYPICAL.

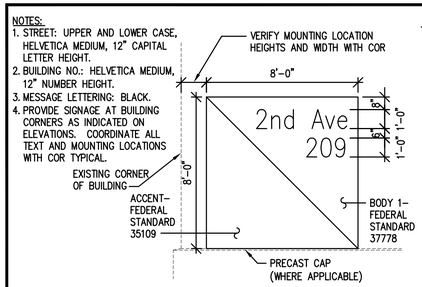

BUILDING LOCATION:	MESSAGE:
NORTH-WEST CORNER, FACING NORTH	2nd Ave 209
NORTH-WEST CORNER, FACING WEST	I St 209
NORTH-EAST CORNER, FACING NORTH	2nd Ave 209
NORTH-EAST CORNER, FACING EAST	J St 209
SOUTH-WEST CORNER, FACING SOUTH	3rd Ave 209
SOUTH-WEST CORNER, FACING WEST	I St 209
SOUTH-EAST CORNER, FACING SOUTH	3rd Ave 209
SOUTH-EAST CORNER, FACING EAST	J St 209

BUILDING IDENTIFICATION SIGNAGE 4
SCALE: 1/4"=1'-0" A-100 AND A-103

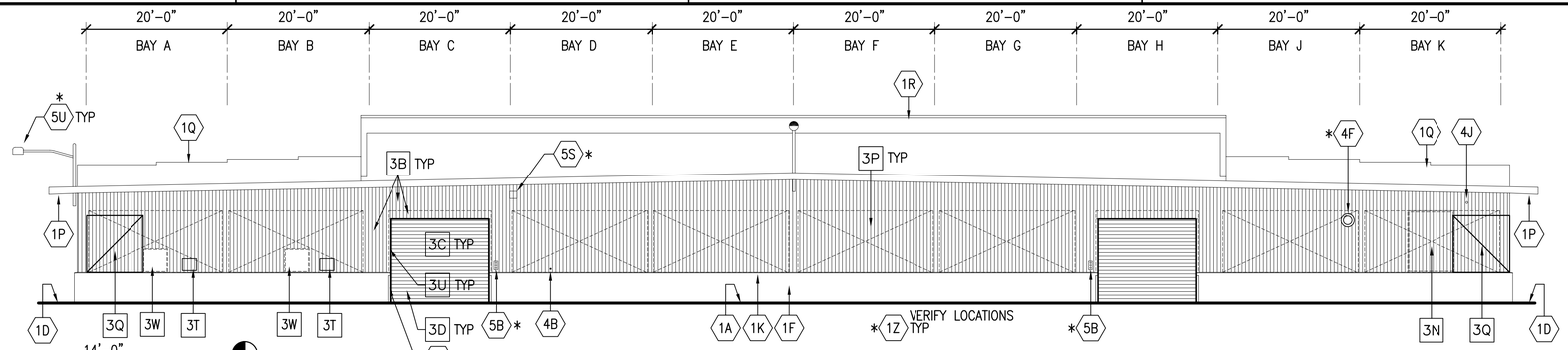

SOUTH ELEVATION - BUILDING 209 1
SCALE: 3/32"=1'-0" A-100

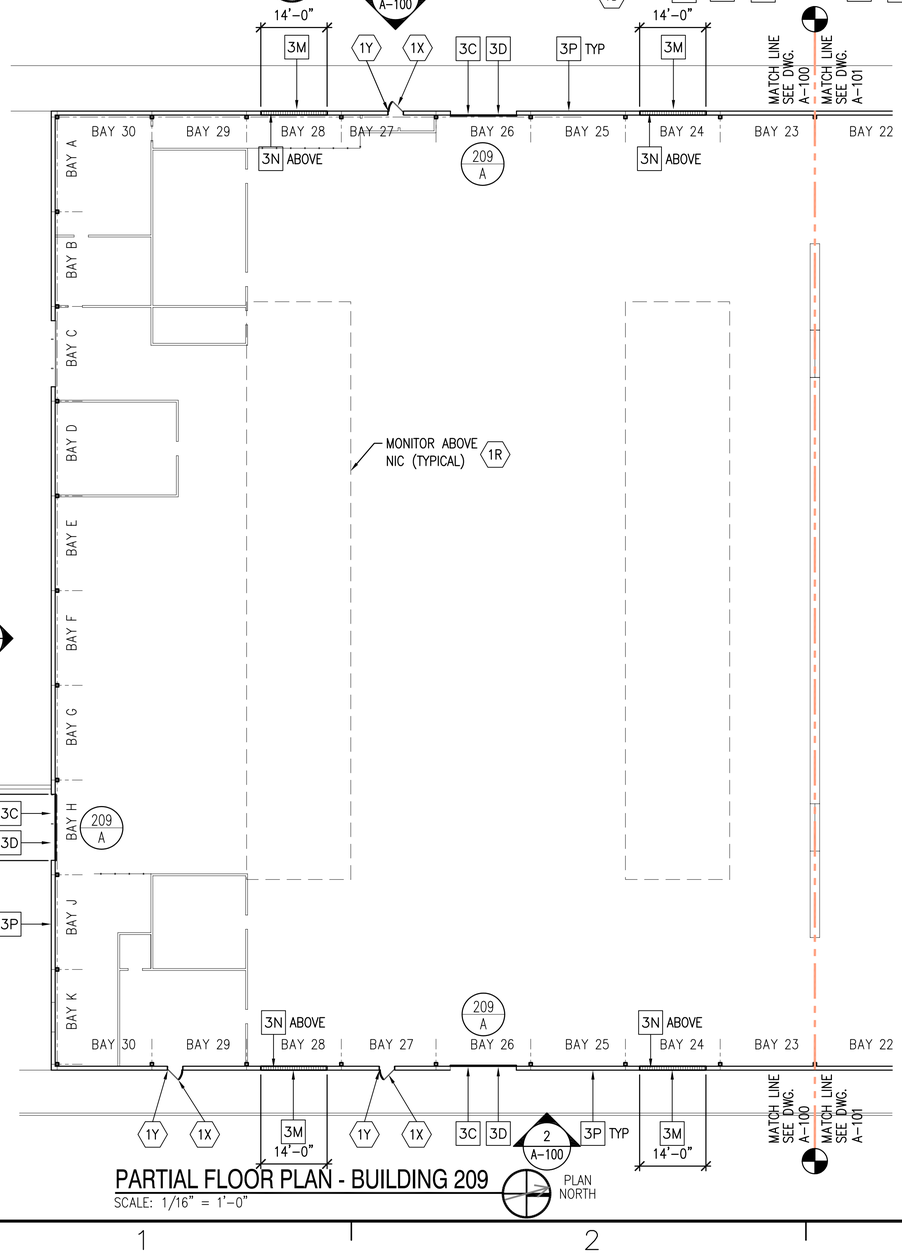

PARTIAL FLOOR PLAN - BUILDING 209
SCALE: 1/16" = 1'-0"

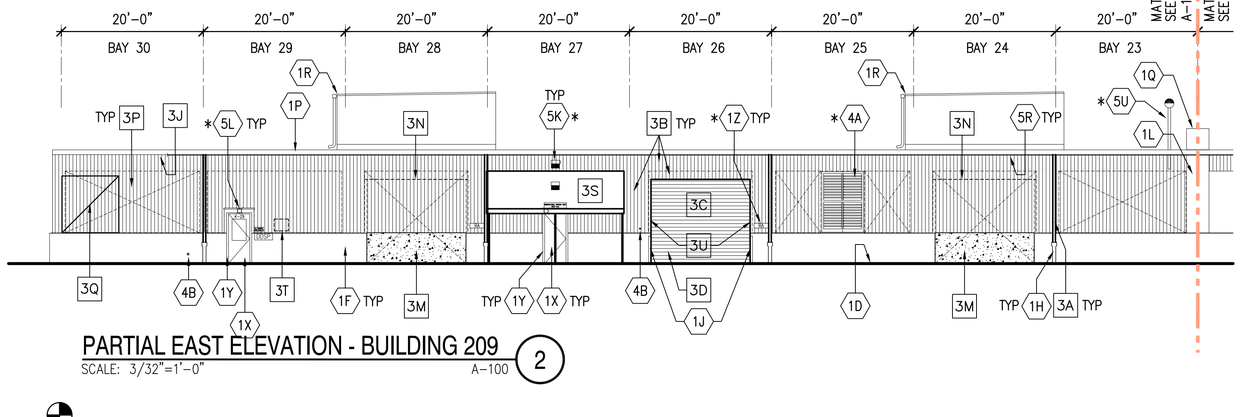

PARTIAL EAST ELEVATION - BUILDING 209 2
SCALE: 3/32"=1'-0" A-100

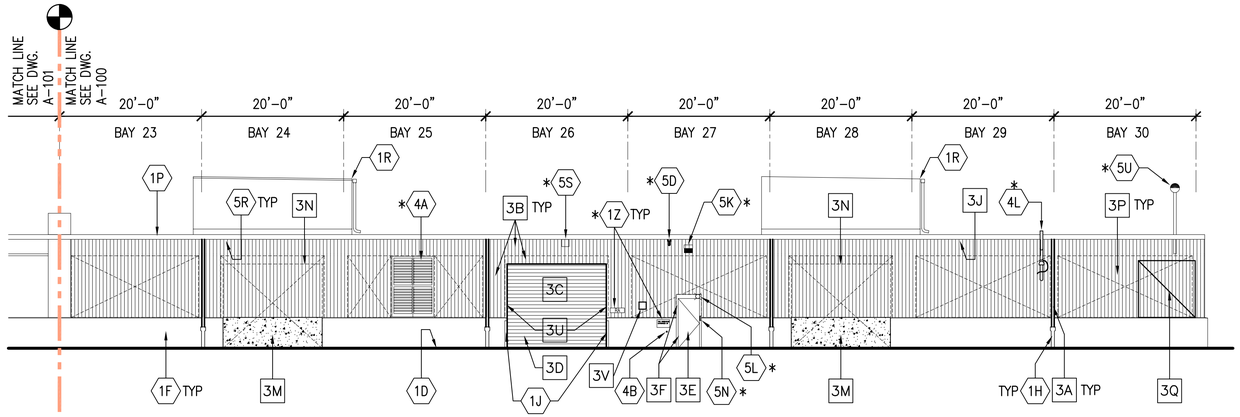

PARTIAL WEST ELEVATION - BUILDING 209 3
SCALE: 3/32"=1'-0" A-100

CHECK AND VERIFY ALL DIMENSIONS AND EXISTING CONDITIONS AT THE SITE.

KEY PLAN
NOT TO SCALE

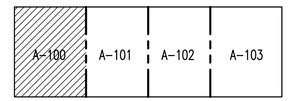

GRAPHIC SCALE
CHECK GRAPHIC SCALES BEFORE USING

SCALE: 1/16"=1'-0"

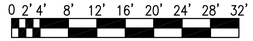

SCALE: 3/32"=1'-0"

APPR | DATE | DESCRIPTION | SYM

NAVFAC

REGISTERED ARCHITECT COMMONWEALTH OF PENNSYLVANIA JOHN E. CONNER NO. RA-012736 RA

Quad3 Architecture Engineering Environmental Services
37 North Washington Street
Wilkes-Barre, PA 18701
phone 570 829-4200
fax 570 829-3732
web www.quad3.com
A/E INFO

APPROVED
FOR COMMANDER NAVFAC

ACTIVITY
REPLACE SIDING- BLDGS 101, 102, 103, 104, 105, 113, 202, 204, 207, 209, 210, 211, 212, & 213
POC: DAVID A. RHOADS

SATISFACTORY TO DATE 05/04/10
DES SS DRW CM CHK SS
PM/DM XXX/XXX
BRANCH MANAGER
CHIEF ENG/ARCH DAR
FIRE PROTECTION

DEPARTMENT OF THE NAVY
NAVAL FACILITIES ENGINEERING COMMAND
NORTHEAST IPT
NAVAL FACILITIES ENGINEERING COMMAND – MID-ATLANTIC
NAVAL STATION – NORFOLK, VIRGINIA
NAVAL SUPPORT ACTIVITY
MECHANICSBURG, PENNSYLVANIA
REPLACE SIDING - BLDGS 101, 102, 103, 104, 105, 113, 202, 204, 207, 209, 210, 211, 212, & 213
PARTIAL FLOOR PLAN AND ELEVATIONS – BUILDING 209

SCALE: AS NOTED
EPROJECT NO.: 811707
CONSTR. CONTR. NO. -
NAVFAC DRAWING NO. 12560432
SHEET 12 OF 18

A-100 | 209-10269

DRAWFORM REVISION: 10 MARCH 2009

FILE NAME: K:\10204.01\ARCH\Building 209\10204-209-A-100.dwg LAYOUT NAME: A-100 PLOTTED: Friday, May 07, 2010 - 10:36am USER: cmclaughlin

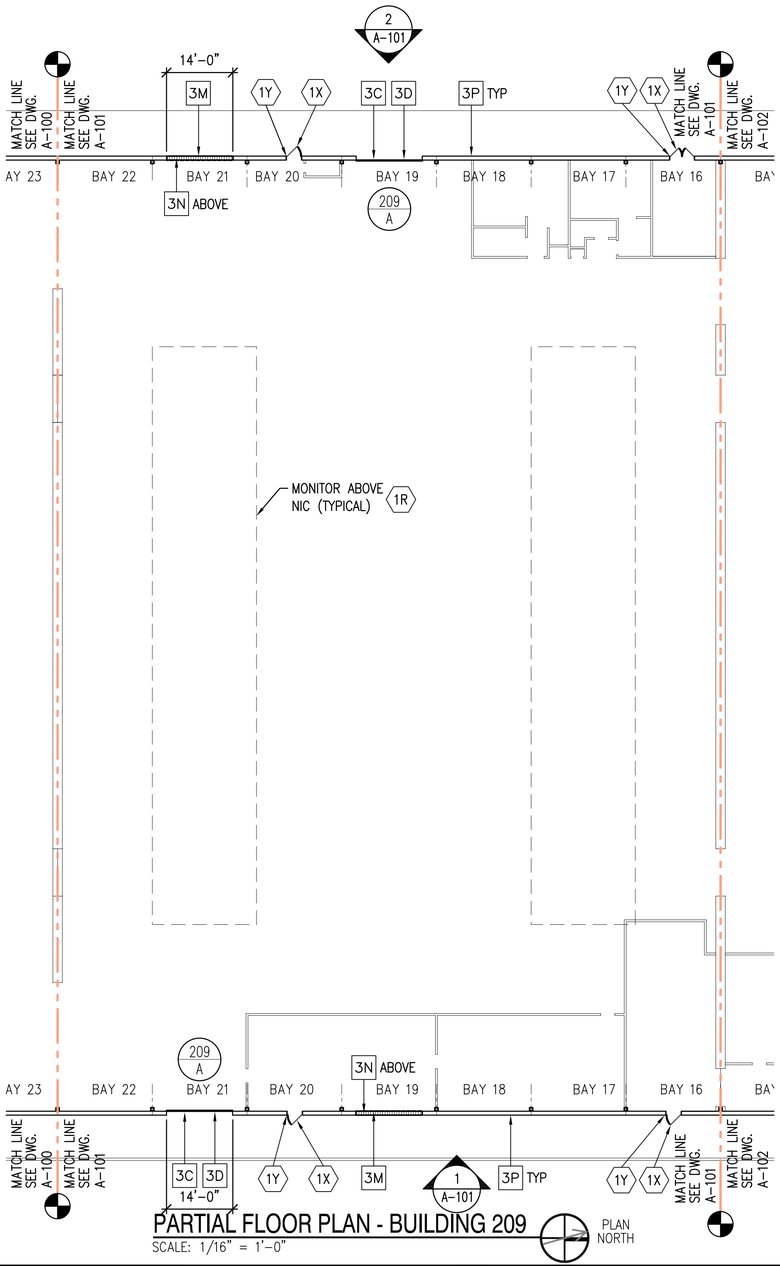

PARTIAL FLOOR PLAN - BUILDING 209

SCALE: 1/16" = 1'-0"

PLAN NORTH

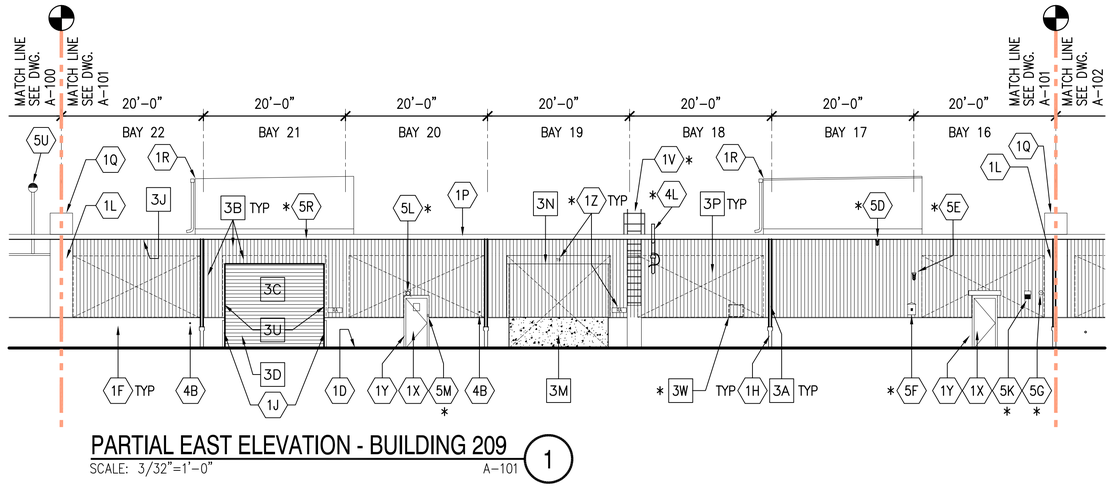

PARTIAL EAST ELEVATION - BUILDING 209

SCALE: 3/32"=1'-0"

1 A-101

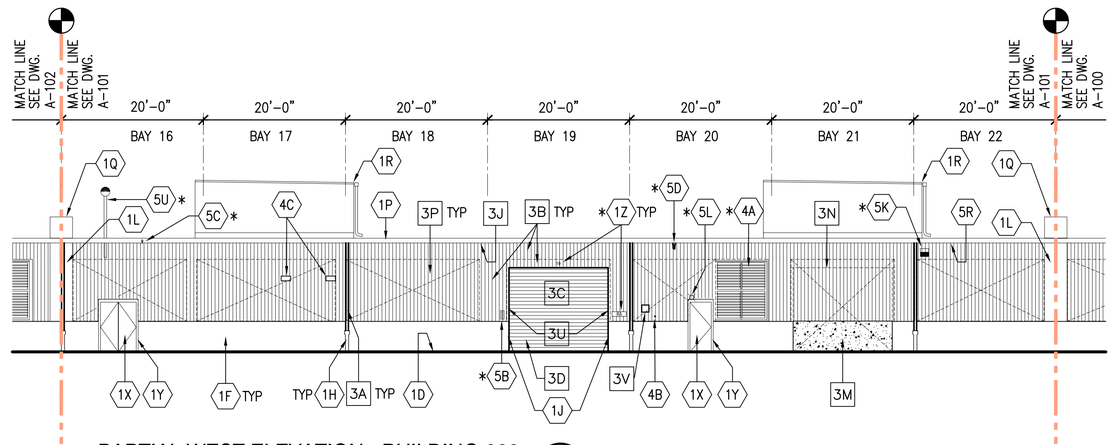

PARTIAL WEST ELEVATION - BUILDING 209

SCALE: 3/32"=1'-0"

2 A-101

CHECK AND VERIFY ALL DIMENSIONS AND EXISTING CONDITIONS AT THE SITE.

KEY PLAN

NOT TO SCALE

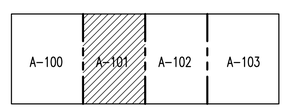

GRAPHIC SCALE

CHECK GRAPHIC SCALES BEFORE USING

0 8' 16' 24' 32' 40' 48'

SCALE: 1/16"=1'-0"

0 2' 4' 8' 12' 16' 20' 24' 28' 32'

SCALE: 3/32"=1'-0"

APPR | DATE | DESCRIPTION | SYM

NAVFAC

REGISTERED ARCHITECT COMMONWEALTH OF PENNSYLVANIA JOHN L. CROWDER No. RA-013736 SEAL

Quad3
Architecture
Engineering
Environmental Services
37 North Washington Street
Wilkes-Barre, PA 18701
phone 570 829-4200
fax 570 829-3732
web www.quad3.com
A/E INFO

APPROVED

FOR COMMANDER NAVFAC

ACTIVITY

REPLACE SIDING- BLDGS 101, 102, 103, 104, 105, 113, 202, 204, 207, 209, 210, 211, 212, & 213
POC: DAVID A. RHOADS

SATISFACTORY TO | DATE 05/04/10

DES SS | DRW CM | CHK SS

PM/DM XXX/XXX

BRANCH MANAGER

CHIEF ENG/ARCH DAR

FIRE PROTECTION

DEPARTMENT OF THE NAVY
NAVAL FACILITIES ENGINEERING COMMAND
NORTHEAST IPT

NAVAL FACILITIES ENGINEERING COMMAND – MID-ATLANTIC
NAVAL STATION – NORFOLK, VIRGINIA

NAVAL SUPPORT ACTIVITY
MECHANICSBURG, PENNSYLVANIA

REPLACE SIDING - BLDGS 101, 102, 103, 104, 105, 113, 202, 204, 207, 209, 210, 211, 212, & 213

PARTIAL FLOOR PLAN AND ELEVATIONS – BUILDING 209

SCALE: AS NOTED

EPROJECT NO.: 811707

CONSTR. CONTR. NO. -

NAVFAC DRAWING NO. 12560433

SHEET 13 OF 18

A-101 | 209-10270

DRAWFORM REVISION: 10 MARCH 2009

FILE NAME: K:\10204.01\ARCH\Building 209\10204-209-A-101.dwg LAYOUT NAME: A-101 PLOTTED: Thursday, May 06, 2010 - 3:27pm USER: cmcdaughlin

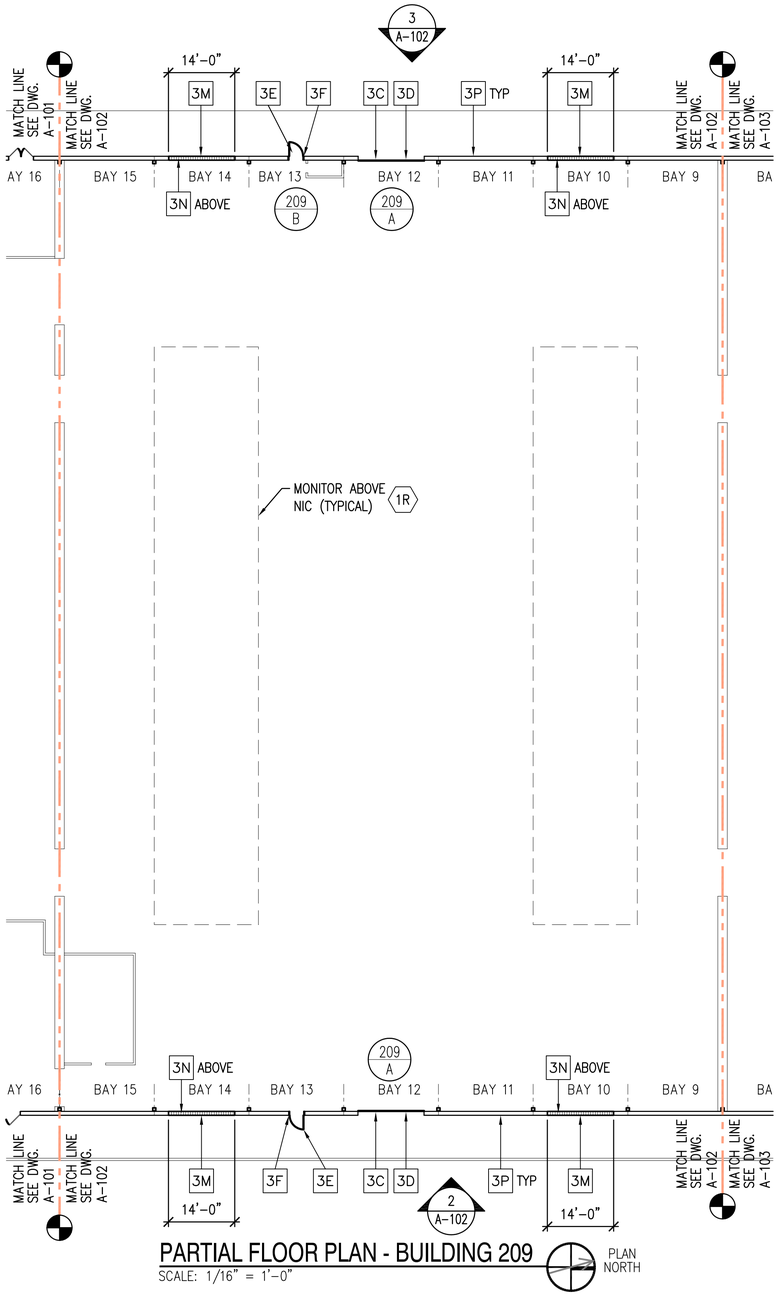

PARTIAL FLOOR PLAN - BUILDING 209

SCALE: 1/16" = 1'-0"

PLAN NORTH

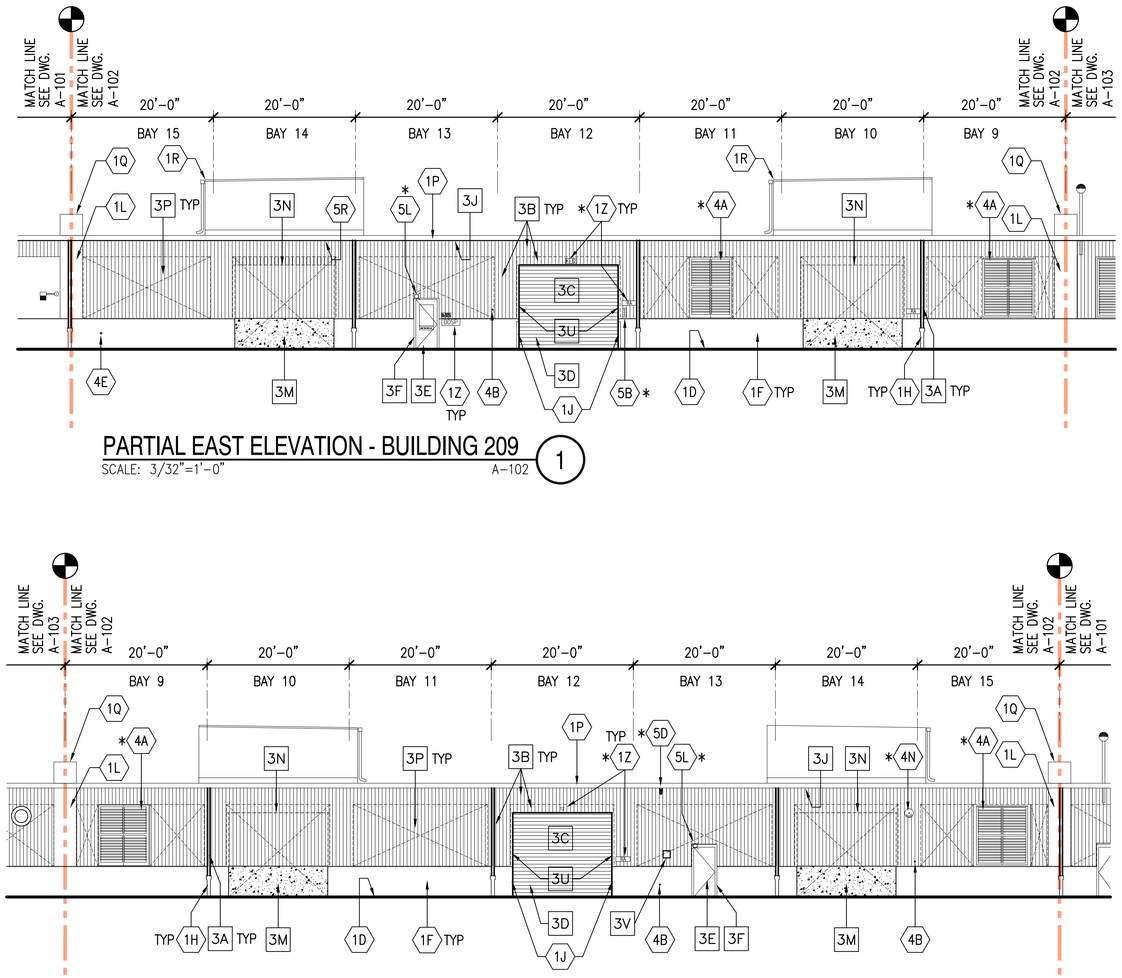

PARTIAL EAST ELEVATION - BUILDING 209

SCALE: 3/32"=1'-0"

A-102 (1)

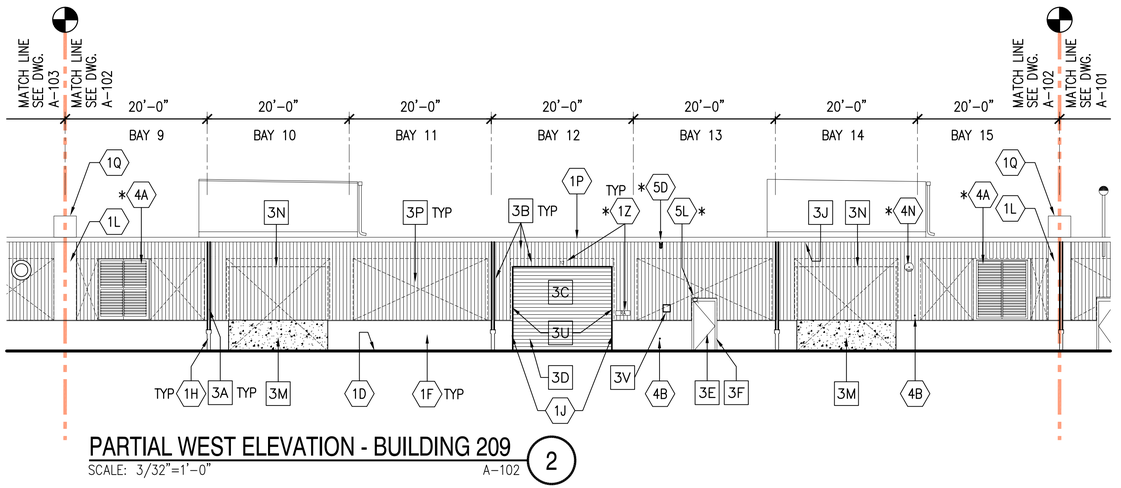

PARTIAL WEST ELEVATION - BUILDING 209

SCALE: 3/32"=1'-0"

A-102 (2)

CHECK AND VERIFY ALL DIMENSIONS AND EXISTING CONDITIONS AT THE SITE.

KEY PLAN

NOT TO SCALE

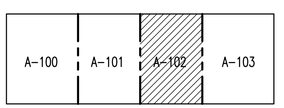

GRAPHIC SCALE

CHECK GRAPHIC SCALES BEFORE USING

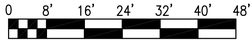

SCALE: 1/16"=1'-0"

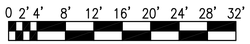

SCALE: 3/32"=1'-0"

NO.	DESCRIPTION	DATE	APPR

NAVFAC

REGISTERED ARCHITECT
COMMONWEALTH OF PENNSYLVANIA
C. CONDER NO. CX 037918
SEAL

Quad3
Architecture
Engineering
Environmental Services
37 North Washington Street
Wilkes-Barre, PA 18701
phone 570 829-4200
fax 570 829-3732
web www.quad3.com
A/E INFO

APPROVED

FOR COMMANDER NAVFAC

ACTIVITY

REPLACE SIDING- BLDGS 101, 102, 103, 104, 105, 113, 202, 204, 207, 209, 210, 211, 212, & 213
POC: DAVID A. RHOADS

SATISFACTORY TO | DATE 05/04/10

DES	SS	DRW	CM	CHK	SS

PM/DM XXX/XXX

BRANCH MANAGER

CHIEF ENG/ARCH DAR

FIRE PROTECTION

DEPARTMENT OF THE NAVY
NAVAL FACILITIES ENGINEERING COMMAND
NORTHEAST IPT

NAVAL FACILITIES ENGINEERING COMMAND – MID-ATLANTIC
NAVAL STATION – NORFOLK, VIRGINIA

NAVAL SUPPORT ACTIVITY
MECHANICSBURG, PENNSYLVANIA

REPLACE SIDING - BLDGS 101, 102, 103, 104, 105, 113, 202, 204, 207, 209, 210, 211, 212, & 213

PARTIAL FLOOR PLAN AND ELEVATIONS – BUILDING 209

SCALE: AS NOTED
EPROJECT NO.: 811707
CONSTR. CONTR. NO. -
NAVFAC DRAWING NO. 12560434
SHEET 14 OF 18

A-102 | 209-10271

DRAWFORM REVISION: 10 MARCH 2009

FILE NAME: K:\10204.01\ARCH\Building 209\10204-209-A-102.dwg LAYOUT NAME: A-102 PLOTTED: Thursday, May 06, 2010 - 3:26pm USER: cmcdaughlin

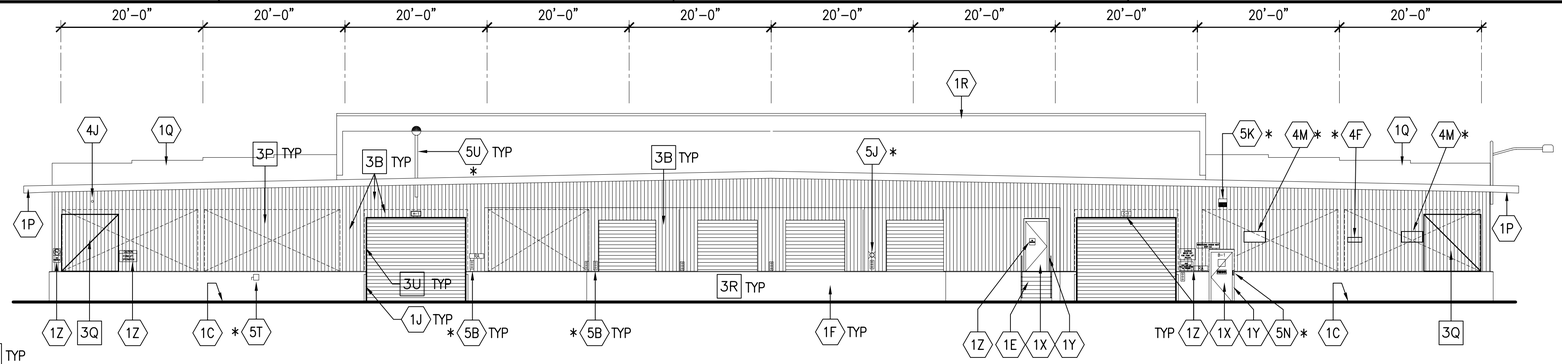

NORTH ELEVATION - BUILDING 209

SCALE: 3/32"=1'-0" A-103 (1)

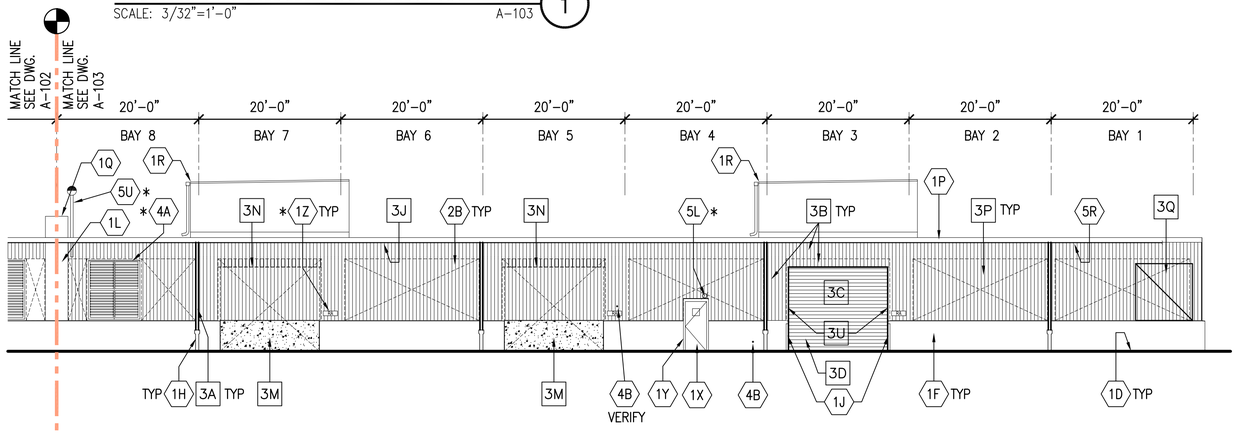

PARTIAL EAST ELEVATION - BUILDING 209

SCALE: 3/32"=1'-0" A-103 (2)

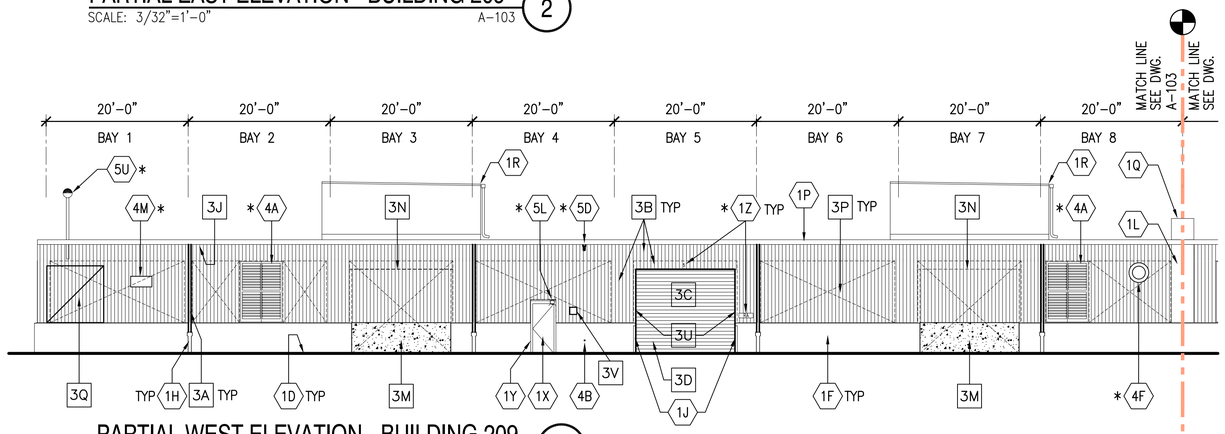

PARTIAL WEST ELEVATION - BUILDING 209

SCALE: 3/32"=1'-0" A-103 (3)

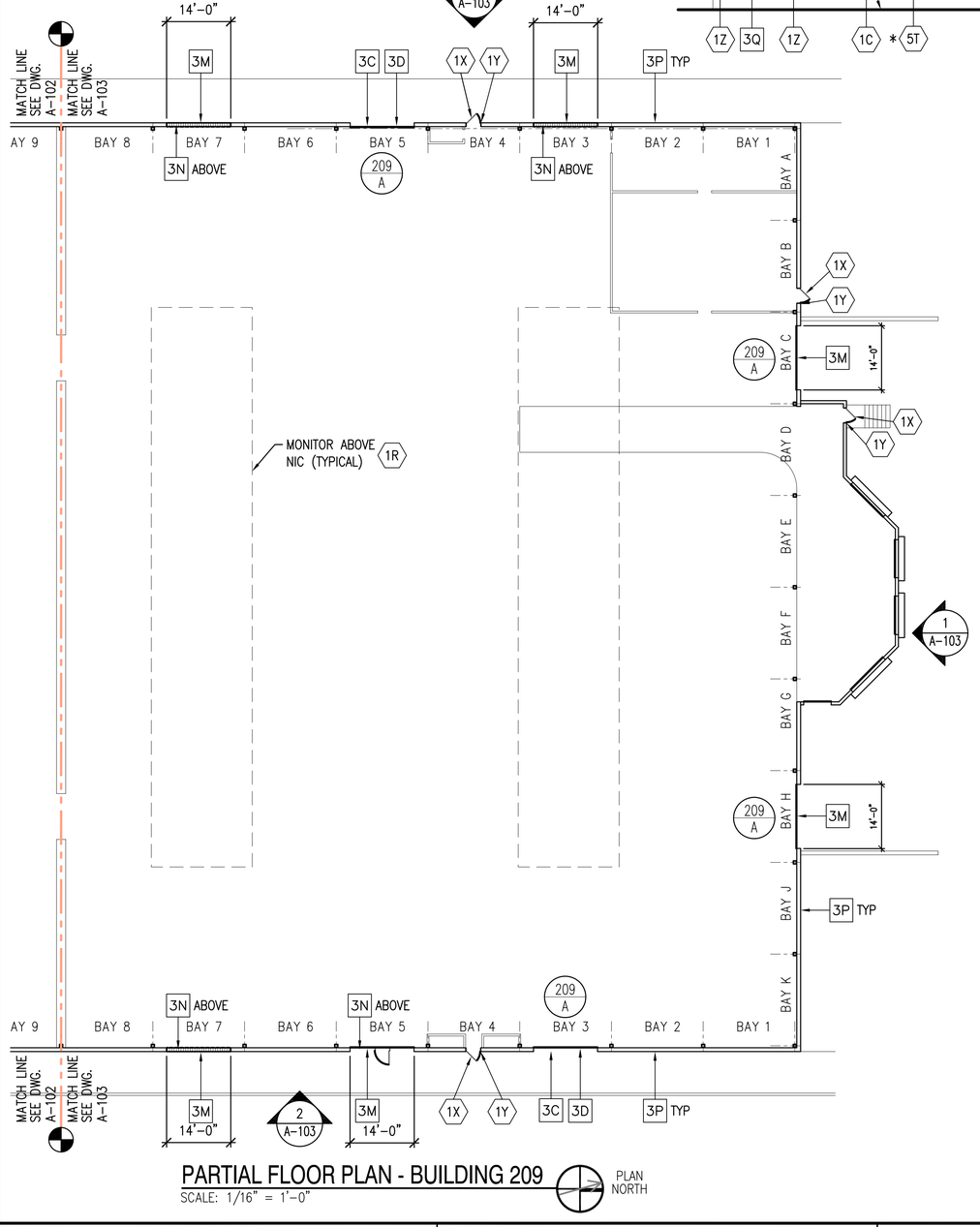

PARTIAL FLOOR PLAN - BUILDING 209

SCALE: 1/16" = 1'-0" PLAN NORTH

CHECK AND VERIFY ALL DIMENSIONS AND EXISTING CONDITIONS AT THE SITE.

KEY PLAN

NOT TO SCALE

A-100 | A-101 | A-102 | A-103

GRAPHIC SCALE

CHECK GRAPHIC SCALES BEFORE USING

0 8' 16' 24' 32' 40' 48'

SCALE: 1/16"=1'-0"

0 2' 4' 8' 12' 16' 20' 24' 28' 32'

SCALE: 3/32"=1'-0"

APPR | DATE | DESCRIPTION | SYM

NAVFAC

NORTH REGISTERED ARCHITECT PENNSYLVANIA CHARLES E. COWDER No. RA-013736 SEAL

Quad3 Architecture Engineering Environmental Services
37 North Washington Street
Wilkes-Barre, PA 18701
phone 570 829-4200
fax 570 829-3732
web www.quad3.com
A/E INFO

APPROVED

FOR COMMANDER NAVFAC

ACTIVITY
REPLACE SIDING- BLDGS 101, 102, 103, 104, 105, 113, 202, 204, 207, 209, 210, 211, 212, & 213
POC: DAVID A. RHOADS

SATISFACTORY TO DATE 05/04/10

DES	DRW	CHK
SS	CM	SS

PM/DM XXX/XXX
BRANCH MANAGER
CHIEF ENG/ARCH DAR
FIRE PROTECTION

DEPARTMENT OF THE NAVY
NAVAL FACILITIES ENGINEERING COMMAND
NORTHEAST IPT
NAVAL FACILITIES ENGINEERING COMMAND – MID-ATLANTIC
NAVAL STATION – NORFOLK, VIRGINIA
NAVAL SUPPORT ACTIVITY
MECHANICSBURG, PENNSYLVANIA
REPLACE SIDING - BLDGS 101, 102, 103, 104, 105, 113, 202, 204, 207, 209, 210, 211, 212, & 213
PARTIAL FLOOR PLAN AND ELEVATIONS – BUILDING 209

SCALE: AS NOTED
EPROJECT NO.: 811707
CONSTR. CONTR. NO.:
NAVFAC DRAWING NO. 12560435
SHEET 15 OF 18
A-103 | 209-10272

DRAWFORM REVISION: 10 MARCH 2009

FILE NAME: K:\10204.01\ARCH\Building 209\10204-209-A-103.dwg LAYOUT NAME: A-103 PLOTTED: Thursday, May 06, 2010 - 3:25pm USER: cmclaughlin

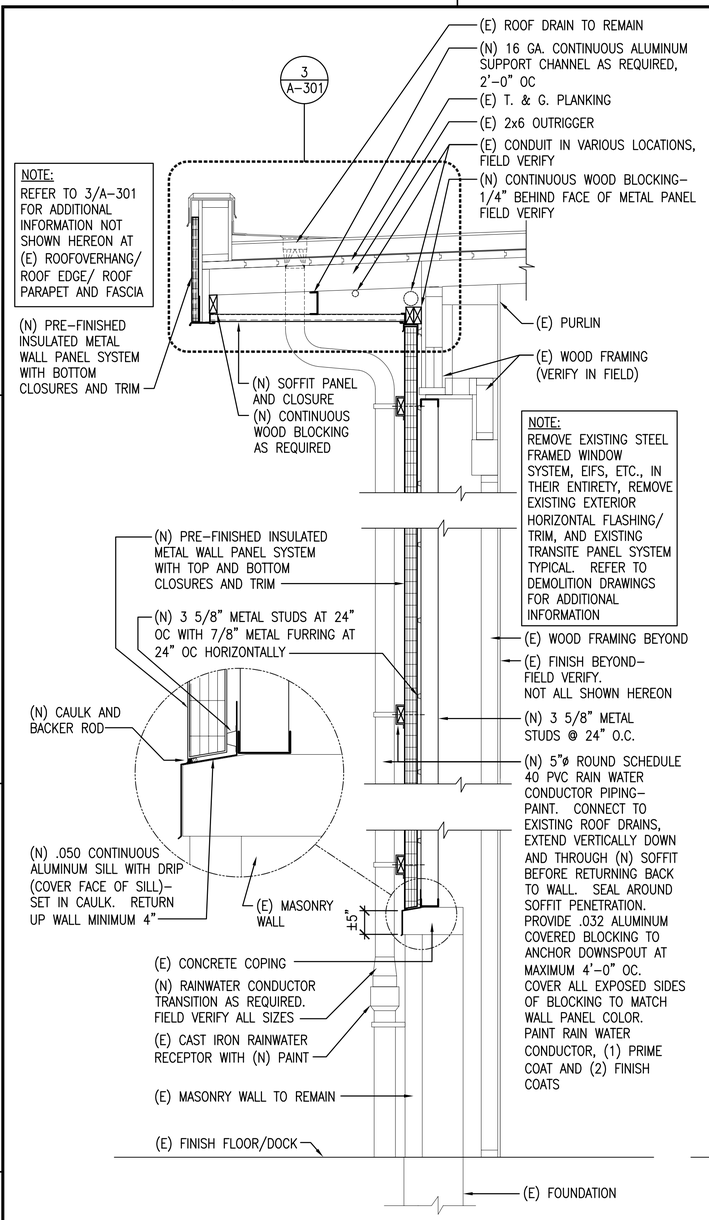

TYPICAL WALL SECTION AT WINDOW INFILL

SCALE: 3/4"=1'–0" G–100 (1)

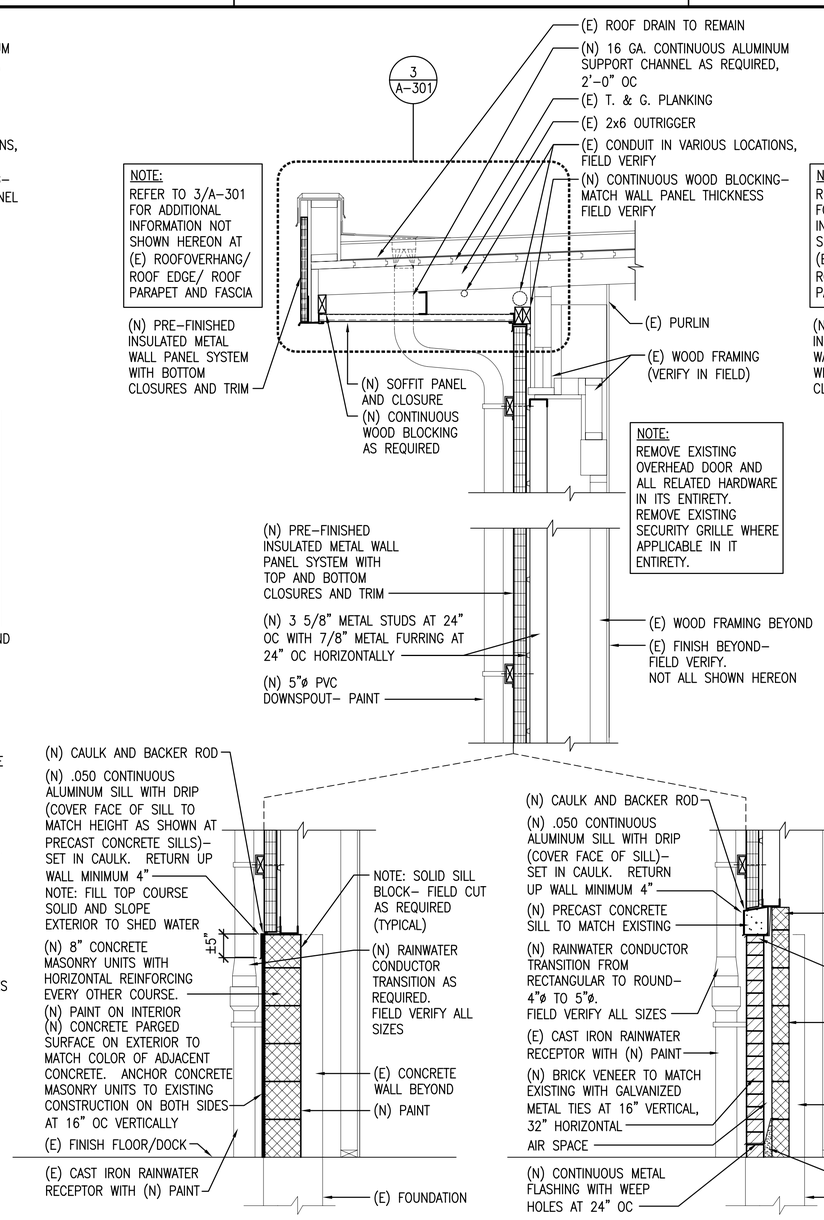

NOTE: SECTION SHOWN AT OVERHEAD DOOR INFILL – CONCRETE WALL

TYPICAL WALL SECTION AT OVERHEAD DOOR INFILL

SCALE: 3/4"=1'–0" G–100 (2)

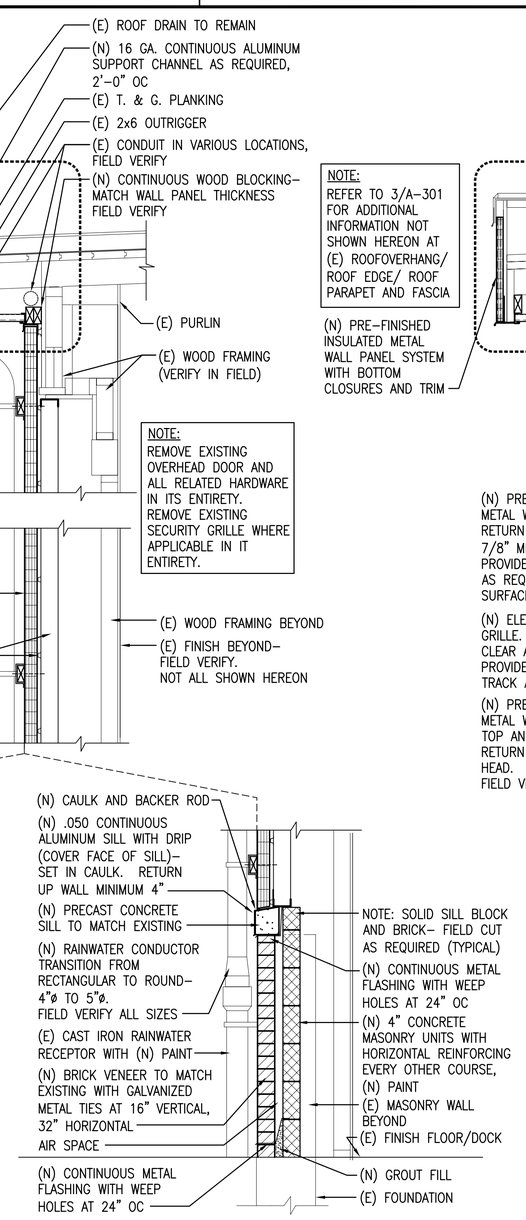

TYPICAL WALL SECTION AT OVERHEAD DOOR

SCALE: 3/4"=1'–0" G–100 (3)

NOTE: SECTION SHOWN AT OVERHEAD DOOR INFILL – BRICK VENEER WALL

NOTE:
ALL METAL PANELS SHALL BE SINGLE PIECE FULL HEIGHT, TYPICAL THROUGHOUT PROJECT

CHECK AND VERIFY ALL DIMENSIONS AND EXISTING CONDITIONS AT THE SITE.

GRAPHIC SCALE

CHECK GRAPHIC SCALES BEFORE USING

0 3"6" 1' 2' 3'

SCALE: 3/4"=1'–0"

APPR | DATE | DESCRIPTION | SYM

NAVFAC

COMMONWEALTH OF PENNSYLVANIA REGISTERED ARCHITECT No. RA-013734 C. COWDER No. EX

SEAL

Quad3 Architecture Engineering Environmental Services

37 North Washington Street
Wilkes-Barre, PA 18701
phone 570 829-4200
fax 570 829-3732
web www.quad3.com

A/E INFO

APPROVED

FOR COMMANDER NAVFAC

ACTIVITY
REPLACE SIDING– BLDGS 101, 102, 103, 104, 105, 113, 202, 204, 207, 209, 210, 211, 212, & 213
POC: DAVID A. RHOADS

SATISFACTORY TO DATE 05/04/10

DES	SS	DRW	CM	CHK	SS
PM/DM	XXX/XXX				
BRANCH MANAGER					
CHIEF ENG/ARCH	DAR				
FIRE PROTECTION					

DEPARTMENT OF THE NAVY
NAVAL FACILITIES ENGINEERING COMMAND
NORTHEAST IPT
NAVAL FACILITIES ENGINEERING COMMAND – MID-ATLANTIC
NAVAL STATION – NORFOLK, VIRGINIA
NAVAL SUPPORT ACTIVITY
MECHANICSBURG, PENNSYLVANIA
REPLACE SIDING - BLDGS 101, 102, 103, 104, 105, 113, 202, 204, 207, 209, 210, 211, 212, & 213
TYPICAL SECTIONS

SCALE: AS NOTED
EPROJECT NO.: 811707
CONSTR. CONTR. NO.:
NAVFAC DRAWING NO. 12560436
SHEET 16 OF 18
A-300 | 209-10273

DRAWFORM REVISION: 10 MARCH 2009

FILE NAME: K:\10204.01\ARCH\Building 209\10204-209-A-300.dwg LAYOUT NAME: A-300 PLOTTED: Thursday, May 06, 2010 - 3:25pm USER: cmcloughlin

NOTE:
REMOVE AND REINSTALL COPING AND CLEAT AS REQUIRED TO INSTALL CAP FLASHING BEHIND CLEAT AND UP WALL 4" MIN.

NOTE:
PROVIDE BACKER ROD AND SEALANT BETWEEN RAKE AND EAVE EDGE TRANSITIONS

(N) EXTENDED CAP FLASHING TO MATCH EXISTING– PROVIDE WASH AND DRIP EDGE AND CONTINUOUS CLEAT

NOTE:
REMOVE (E) CAP FLASHING

(E) FELT UNDERLAYMENT

(E) WOOD BLOCKING

NOTE:
REMOVE (E) TRANSITE PANELS

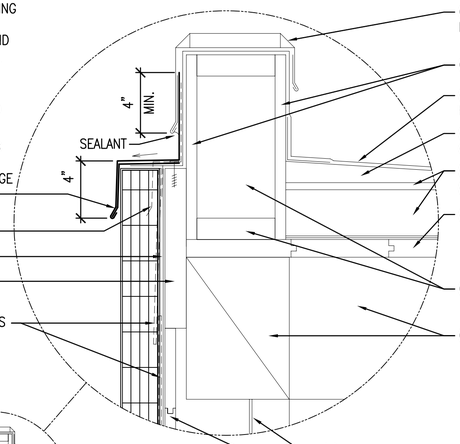

(E) STANDING SEAM PARAPET CAP

(E) PLYWOOD

(E) SINGLE–PLY EPDM ROOFING MEMBRANE

(E) TAPERED ROOF EDGE OR CRICKET

(E) COVER BOARD AND (E) ROOF INSULATION BOARD

(E) T. & G. PLANKING

(E) WOOD FRAMING

(E) WOOD ROOF FRAMING

(E) TRANSITE PANEL

(E) WOOD SIDING

(E) WOOD FRAMING AT WINDOW HEAD (VERIFY)

NOTE:
REMOVE (E) STEEL FRAMED WINDOW SYSTEM IN ITS ENTIRETY

(N) PRE–FINISHED INSULATED METAL WALL PANEL SYSTEM WITH TOP AND BOTTOM CLOSURES AND TRIM
NOTE: WALL PANELS SHALL RUN UNINTERRUPTED IN HEIGHT IN SAME PLANE

(N) 3 5/8" METAL STUDS AT 24" O.C.

NOTE: FINISHED PLANE OF METAL WALL PANEL SYSTEM SHOWN HEREON IS DIAGRAMMATIC IN NATURE– FIELD VERIFY SETBACK OF (E) BUILDING COMPONENTS TO REMAIN

NOTE:
INFILL WALL FRAMING TO PROVIDE A UNIFORM WALL PLANE FOR METAL PANELS FROM SILL TO ROOF RAKE. VARIOUS EXISTING PLANES AS SEEN ON PHOTOGRAPHS ARE PRESENT. NOT ALL ARE SHOEN ON SECTIONS. PROVIDE ALL REUIRED FRAMING ON SHEATHING WHETHER INDICATED OR NOT.

HEIGHT VARIES ALONG RAKE – FIELD VERIFY
(FULL HEIGHT – SINGLE PIECE PANELS TYPICAL)

(N) CAULK AND BACKER ROD

(N) .050 CONTINUOUS ALUMINUM SILL WITH DRIP (COVER FACE OF SILL– SET IN CAULK. RETURN UP WALL MINIMUM 4"

(E) PRECAST CONCRETE SILL

(E) BRICK VENEER TO REMAIN

(E) MASONRY WALL

(E) FINISH GRADE ELEVATION (VARIES)– FIELD VERIFY

(E) FINISH FLOOR/DOCK

(E) FOUNDATION

TYPICAL WALL SECTION AT END WALL

SCALE: 3/4"=1'–0" — G–100 — 1

(N) HEADER AS REQUIRED

(N) 3 5/8" METAL STUDS AT 24" OC AND 7/8" METAL FURRING

(E) INTERIOR FINISH TO REMAIN

(N) PRE–FINISHED INSULATED METAL WALL PANEL SYSTEM

(N) FINISH TO MATCH EXISTING

(N) METAL PANEL CLOSURE

(N) METAL PANEL FLASHING WITH DRIP– SET BOTTOM 1/4" BELOW WINDOW HEAD

(N) INTERIOR FINISH– RETURN UNDER HEAD

(N) .050 ALUMINUM COVER ON HEAD AND JAMBS AS REQUIRED

(N) 1/2" SHIM AND CAULK INSIDE AND OUTSIDE PERIMETER.

(N) 42" x 38" HIGH WINDOW– CAULK PERIMETER INSIDE AND OUTSIDE. FIELD VERIFY LOCATION TYPICAL

(N) CAULK AND BACKER ROD

(N) INTERIOR FINISH– RETURN UNDER HEAD

(N) .050 CONTINUOUS ALUMINUM SILL WITH DRIP (COVER FACE OF SILL TO MATCH HEIGHT AS SHOWN AT PRECAST CONCRETE SILLS)– SET IN CAULK. RETURN UP BACK SIDE OF WINDOW FRAME

(N) PRESSURE TREATED WOOD FILLER

(N) 3/4" PRESSURE TREATED PLYWOOD

(E) INTERIOR FINISH TO REMAIN

(N) INSULATION AT OFFICE LOCATIONS. R–19 FIBERGLASS WITH VAPOR BARRIER

(E) INTERIOR WOOD FRAMING AND/OR FINISH BEYOND. FIELD VERIFY– VARIES

NOTE:
(N) PROVIDE ADDITIONAL WALL FRAMING AND FINISHES TO MATCH EXISTING AT ALL WINDOW AND/OR AIR CONDITIONING UNIT REPLACEMENT LOCATIONS

REMOVE AND REPLACE FINISHES IN AND AROUND THESE LOCATIONS, PAINT TO MATCH EXISTING WHERE APPLICABLE

(N) FRAMING AND FINISH AS REQUIRED TO MATCH EXISTING– FIELD VERIFY LOCATIONS AND QUANTITY

(E) INTERIOR WOOD WALL FRAMING AND/OR FINISH. FIELD VERIFY– VARIES

(E) CONCRETE OR MASONRY WALL TO REMAIN

FINISH FLOOR

(E) FOUNDATION

TYPICAL WALL SECTION AT WINDOW OPENING

SCALE: 3/4"=1'–0" — A–400 — 2

NOTE: SIMILAR AT AIR CONDITIONING UNITS

(E) STANDING SEAM PARAPET CAP

(E) WOOD BLOCKING

(E) 2x STUD WALL

REMOVE (E) EIFS WALL SYSTEM AT FASCIA

REMOVE (E) GLASS FACED GYPSUM BOARD

(N) PRE–FINISHED INSULATED METAL WALL PANEL SYSTEM– MATCH BLOCKING THICKNESS, RUN BEHIND (E) PARAPET CAP

NOTE: REMOVE (E) BOTTOM FASCIA CLOSURES

(N) METAL BOTTOM CLOSURES WITH DRIP

(E) PLYWOOD

(E) SINGLE–PLY EPDM ROOFING MEMBRANE

(E) TAPERED ROOF EDGE OR CRICKET

(E) ROOF DRAIN

(E) COVER BOARD AND (E) ROOF INSULATION BOARD

(E) T. & G. PLANKING

(E) 2x6 OUTRIGGER

(N) 16 GA. CONTINUOUS ALUMINUM SUPPORT CHANNEL AT MIDSPAN

(E) CONDUIT IN VARIOUS LOCATIONS, FIELD VERIFY

(N) CONTINUOUS WOOD BLOCKING– MATCH WALL PANEL THICKNESS, FIELD VERIFY

(E) WOOD BLOCKING

(N) 2x CONTINUOUS WOOD BLOCKING AS REQUIRED

NOTES:
1. (N) ALUMINUM SOFFIT SHALL HAVE VENTED PANELS AT 8'–0" OC

(N) SOFFIT PANEL AND CLOSURE

±4'–0" ROOF OVERHANG

BUILDINGS WITH ±4'–0" DEEP ROOF OVERHANG:
103, 104, 113, 202, 204, 207, 209, 210, 212, 213.

BUILDINGS WITH GREATER THAN ±4'–0" DEEP ROOF OVERHANG:
101, 102, 105, 211.

NOTE: OMIT (N) SOFFIT PANEL/ CLOSURE AND (N) SUPPORT CHANNELS AT OVERHANGS BEYOND ±4'–0" IN DEPTH, PAINT ALL EXPOSED SURFACES INCLUDING (E) CONDUIT: SCRAPE AND SAND, PRIME PAINT ONE COAT AND PAINT TWO FINISH COATS.

(N) PRE–FINISHED INSULATED METAL WALL PANEL SYSTEM WITH TOP AND BOTTOM CLOSURES AND TRIM

(E) WALL CONSTRUCTION– REFER TO SECTIONS FOR ADDITIONAL INFORMATION

TYPICAL SOFFIT SECTION

SCALE: NOT TO SCALE — A–300 — 3

(R) REMOVE EXISTING TRANSITE PANELS FROM AROUND INSIDE JAMBS AND HEADS OF ALL DOORS. REFER TO PLANS AND PHOTOGRAPHS FOR ADDITIONAL INFORMATION

(E) CONCRETE PEDESTALS

(E) 10'x10" WOOD BUILDING COLUMN

(N) 3 5/8" METAL STUDS AT 24" OC AND 7/8" METAL FURRING

(E) CONCRETE WALL

(N) PRE–FINISHED INSULATED METAL WALL PANEL SYSTEM WITH TOP AND BOTTOM CLOSURES AND TRIM

(E) EXISTING FRAMING TO REMAIN

(E) CONCRETE SILL

PROVIDE PRESSURE TREATED WOOD FILLER AS REQUIRED

(N) 1/2" PLYWOOD SHEATHING FULL HEIGHT. ANCHOR TO (N) OR (E) STUDS. REINSTALL ALL ELECTRICAL COMPONENTS WHEN COMPLETE. (N) PAINT ON PLYWOOD

(E) 8"x8" WOOD POST FRAME

(N) ELECTRICALLY OPERATED COILING OVERHEAD DOOR AND TRACK– ATTACH TO EXISTING POSTS AS REQUIRED. SEE PLAN AND ELEVATIONS FOR SIZE

14'–0" DOOR OPENING

(N) PERIMETER WEATHERSTRIPPING

(N) COVER FACES OF (E) POSTS WITH .050 ALUMINUM, RETURN ENDS BACK MINIMUM 2" AND ANCHOR ON RETURN– NO FACE ANCHORS, SIMILAR FOR HEAD

(E) EXISTING BRICK VENEER WALL BELOW

(E) EXISTING STEEL ANGLE GUARD BELOW– REMOVE AND REINSTALL AS REQUIRED. (N) PAINT

NOTES:
1. (R) REFER TO DEMOLITION DRAWINGS FOR TRANSITE DEMOLITION NOTES NOT SHOWN HEREON
2. EXTEND PANEL AND/OR .050 ALUMINUM DOWN TO GRADE AT OVERHEAD DOOR JAMBS
3. (N) COILING SECURITY GRILLE (EXTERIOR MOUNT) NOT SHOWN HEREON FOR CLARITY PURPOSES ONLY
4. (N) PROVIDE/REPLACE ANY DAMAGED STUDS OR AS REQUIRED FOR (N) CONSTRUCTION
5. DETAILS SIMILAR FOR MANDOORS, BOTH (N) AND (E). PAINT ALL (N) AND (E) DOORS AND FRAMES. PROVIDE .050 ALUMINUM TRIM ON JAMBS AND HEAD. REFER TO ELEVATIONS

TYPICAL PLAN DETAIL AT OVERHEAD DOOR

SCALE: 3/4"=1'–0" — A–400 — 4

NOTE:
ALL METAL PANELS SHALL BE SINGLE PIECE FULL HEIGHT, TYPICAL THROUGHOUT PROJECT

CHECK AND VERIFY ALL DIMENSIONS AND EXISTING CONDITIONS AT THE SITE.

GRAPHIC SCALE

CHECK GRAPHIC SCALES BEFORE USING

0 3"6" 1' 2' 3'

SCALE: 3/4"=1'–0"

APPR | DATE | DESCRIPTION | SYM

NAVFAC

REGISTERED ARCHITECT — COMMONWEALTH OF PENNSYLVANIA — C. COWDER NO. RA-013736-E — SEAL

Quad3 Architecture Engineering Environmental Services
37 North Washington Street
Wilkes-Barre, PA 18701
phone 570 829-4200
fax 570 829-3732
web www.quad3.com
A/E INFO

APPROVED
FOR COMMANDER NAVFAC

ACTIVITY
REPLACE SIDING– BLDGS 101, 102, 103, 104, 105, 113, 202, 204, 207, 209, 210, 211, 212, & 213
POC: DAVID A. RHOADS

SATISFACTORY TO — DATE 05/04/10

DES	SS	DRW	CM	CHK	SS
PM/DM	XXX/XXX				
BRANCH MANAGER					
CHIEF ENG/ARCH	DAR				
FIRE PROTECTION					

DEPARTMENT OF THE NAVY
NAVAL FACILITIES ENGINEERING COMMAND
NORTHEAST PT

NAVAL FACILITIES ENGINEERING COMMAND – MID-ATLANTIC
NAVAL STATION – NORFOLK, VIRGINIA

NAVAL SUPPORT ACTIVITY
MECHANICSBURG, PENNSYLVANIA

REPLACE SIDING - BLDGS 101, 102, 103, 104, 105, 113, 202, 204, 207, 209, 210, 211, 212, & 213

TYPICAL SECTIONS

SCALE: AS NOTED
EPROJECT NO.: 811707
CONSTR. CONTR. NO.:
NAVFAC DRAWING NO.: 12560437
SHEET 17 OF 18
A-301 | 209-10274

DRAWFORM REVISION: 10 MARCH 2009

FILE NAME: K:\10204.01\ARCH\Building 209\10204-209-A-301.dwg LAYOUT NAME: A-301 PLOTTED: Thursday, May 06, 2010 – 3:24pm USER: cmclaughlin

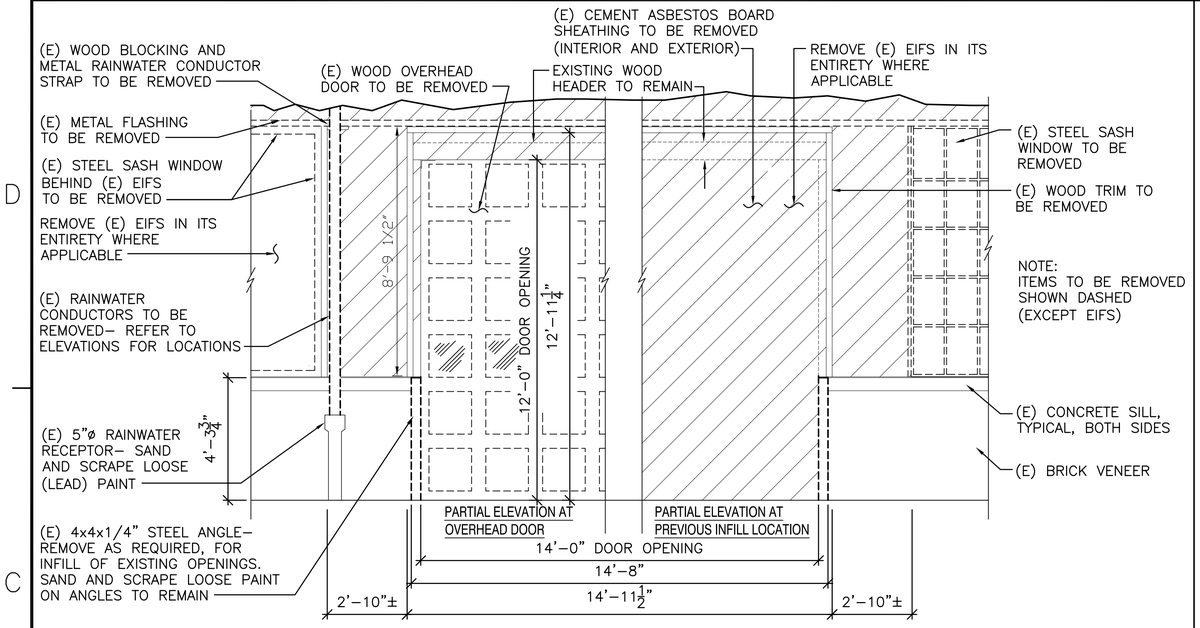

TYPICAL BAY DEMOLITION ELEVATION

SCALE: 3/8"=1'–0" G–100 (1)

NOTE: REFER TO PLANS, ELEVATIONS, PHOTOGRAPHS AND NOTES FOR ADDITIONAL INFORMATION. NOT ALL SHOWN HEREON.

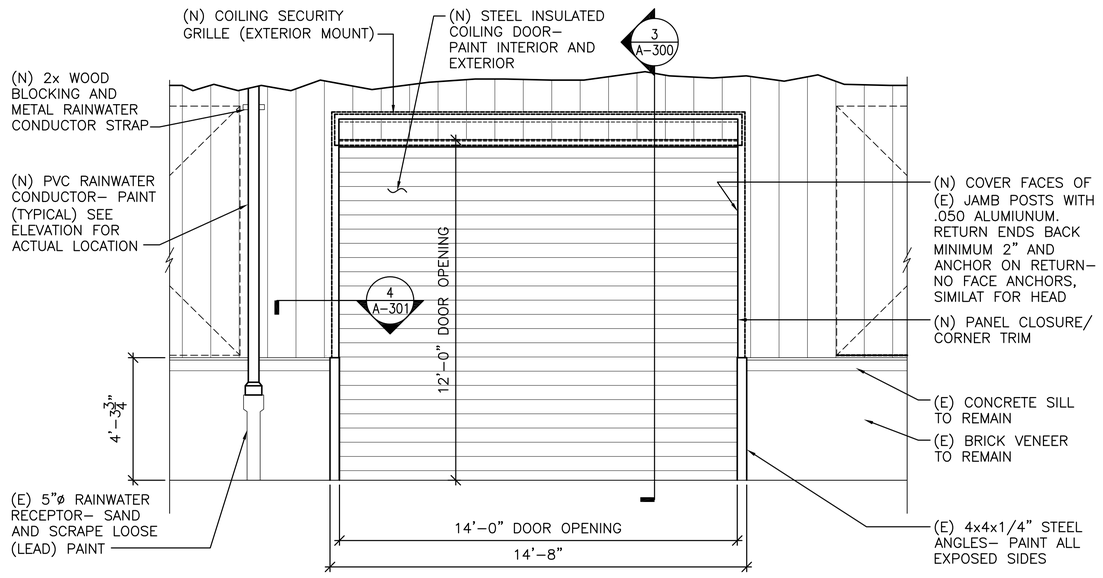

TYPICAL OVERHEAD DOOR ELEVATION

SCALE: 3/8"=1'–0" G–100 (2)

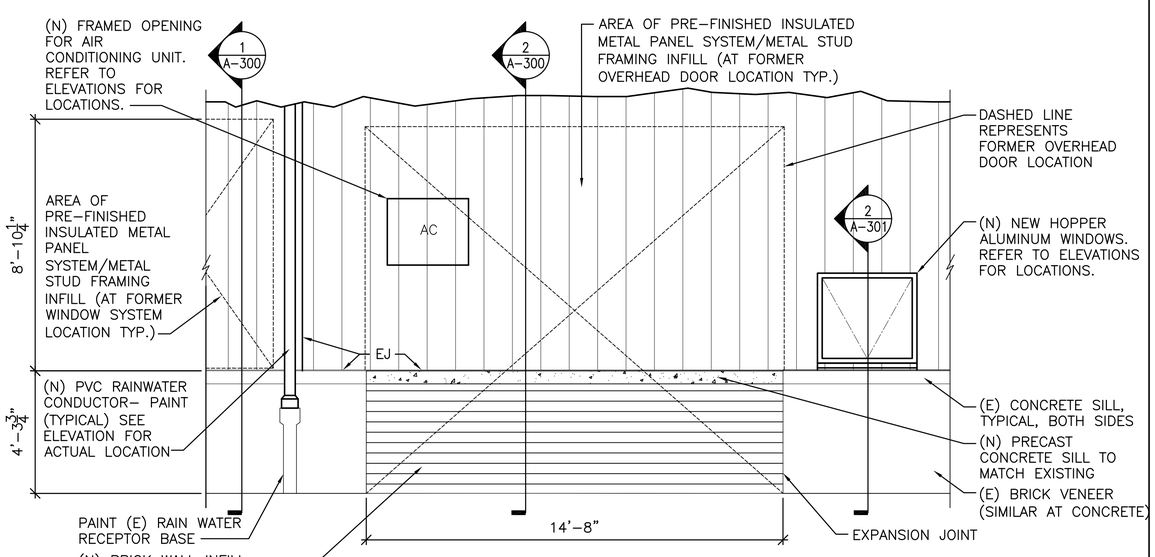

TYPICAL OVERHEAD DOOR INFILL, WINDOW INFILL ELEVATION

SCALE: 3/8"=1'–0" G–100 (3)

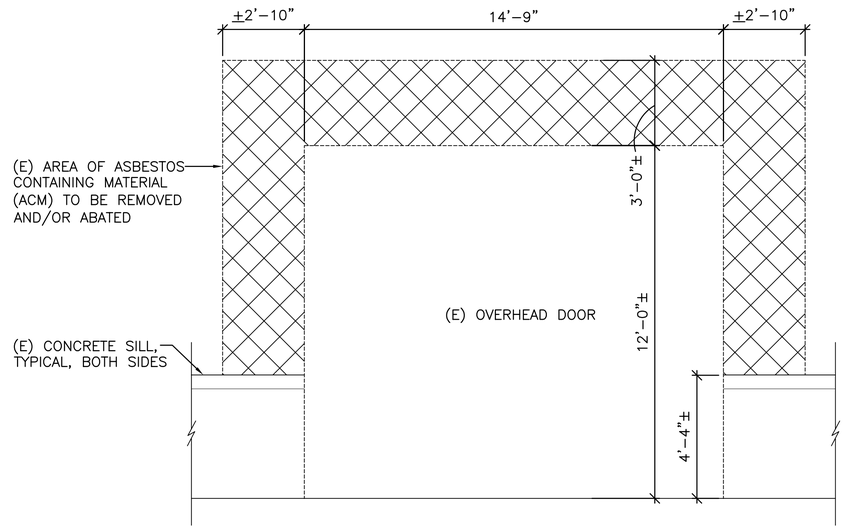

PARTIAL INTERIOR ELEVATION AT OVERHEAD DOORS (APPROXIMATE INTERIOR TRANSITE LOCATIONS)

SCALE: 3/8"=1'–0" G–100 (4)

CHECK AND VERIFY ALL DIMENSIONS AND EXISTING CONDITIONS AT THE SITE.

GRAPHIC SCALE

CHECK GRAPHIC SCALES BEFORE USING

0 6" 1' 2' 3' 4' 5' 6' 7' 8'

SCALE: 3/8"=1'–0"

Quad3 Architecture Engineering Environmental Services
37 North Washington Street
Wilkes-Barre, PA 18701
phone 570 829-4200
fax 570 829-3732
web www.quad3.com
A/E INFO

APPROVED
FOR COMMANDER NAVFAC

ACTIVITY
REPLACE SIDING– BLDGS 101, 102, 103, 104, 105, 113, 202, 204, 207, 209, 210, 211, 212, & 213
POC: DAVID A. RHOADS

SATISFACTORY TO DATE 05/04/10

DES	SS	DRW	CM	CHK	SS
PM/DM	XXX/XXX				
BRANCH MANAGER					
CHIEF ENG/ARCH	DAR				
FIRE PROTECTION					

DEPARTMENT OF THE NAVY
NAVAL FACILITIES ENGINEERING COMMAND
NORTHEAST IPT

NAVAL FACILITIES ENGINEERING COMMAND – MID-ATLANTIC
NAVAL STATION – NORFOLK, VIRGINIA

NAVAL SUPPORT ACTIVITY
MECHANICSBURG, PENNSYLVANIA

REPLACE SIDING - BLDGS 101, 102, 103, 104, 105, 113, 202, 204, 207, 209, 210, 211, 212, & 213

TYPICAL LARGE SCALE ELEVATIONS

SCALE:	AS NOTED
EPROJECT NO.:	811707
CONSTR. CONTR. NO.:	.
NAVFAC DRAWING NO.	12560438
SHEET	18 OF 18
A-400	209-10275

DRAWFORM REVISION: 10 MARCH 2009

FILE NAME: K:\10204.01\ARCH\Building 209\10204-209-A-400.dwg LAYOUT NAME: A-400 PLOTTED: Thursday, May 06, 2010 - 3:23pm USER: cmclaughlin