WORK ORDER NO. 1111695

P-816 Demolition of the Steam System

At

Naval Station Great Lakes
Great Lakes, IL

Request for Proposal Prepared By:

NAVFAC MID-ATLANTIC, NE IPT
9742 Maryland Avenue
Norfolk, VA 23511-3095

Civil: Lisa Gmaz, EIT/Boris Shilman, PE
Mechanical: James Michonski, PE
Electrical: Bruce Garrett, PE

Submitted By: Lawrence Trueworthy, PE Date: 8 April 2015

REQUEST FOR PROPOSAL APPROVED BY:

Northeast IPT Capital Improvements
Engineering Director: David W. Greenfield, RA
For Commander, NAVFAC Mid-Atlantic
Date: 8 April 2015

David Greenfield

David Greenfield, RA

Table of Contents

PART 1 – PROPOSAL FORMS & DOCUMENTS

PART 2 – GENERAL REQUIREMENTS

01 11 00	SUMMARY OF WORK
01 14 00.05 20	WORK RESTRICTIONS FOR DESIGN-BUILD
01 20 00.05 20	PRICE AND PAYMENT PROCEDURES FOR DESIGN-BUILD
01 30 00.05 20	ADMINISTRATIVE REQUIREMENTS FOR DESIGN-BUILD
01 31 19.05 20	POST AWARD MEETINGS
01 32 17.05 20	NETWORK ANALYSIS SCHEDULES (NAS) FOR DESIGN-BUILD
01 33 00.05 20	CONSTRUCTION SUBMITTAL PROCEDURES
01 33 10.05 20	DESIGN SUBMITTAL PROCEDURES
01 35 26.05 20	GOVERNMENT SAFETY REQUIREMENTS FOR DESIGN-BUILD
01 42 15	METRIC MEASUREMENTS
01 45 00.05 20	DESIGN AND CONSTRUCTION QUALITY CONTROL
01 50 00.05 20	TEMPORARY FACILITIES AND CONTROLS FOR DESIGN-BUILD
01 57 19.00 20	TEMPORARY ENVIRONMENTAL CONTROLS
01 57 19.01 20	SUPPLEMENTAL TEMPORARY ENVIRONMENTAL CONTROLS
01 57 19.01 20A	ASBESTOS HAZARD CONTROL ACTIVITIES
01 57 19.01 20B	SOIL, FILL AND CONSTRUCTION/DEMOLITION DEBRIS REMOVAL
01 58 00	PROJECT IDENTIFICATION
01 58 00A	PROJECT IDENTIFICATION SIGNBOARD DETAILS
01 74 19.05 20	CONSTRUCTION AND DEMOLITION WASTE MANAGEMENT FOR DESIGN-BUILD
01 78 23	OPERATION AND MAINTENANCE DATA
01 78 24.00 20	FACILITY ELECTRONIC OPERATION AND MAINTENANCE SUPPORT INFORMATION (eOMSI)

PART 3 – PROJECT PROGRAM

CHAPTER 1 PROJECT DESCRIPTION
CHAPTER 2 PROJECT OBJECTIVES
CHAPTER 3. SITE ANALYSIS
CHAPTER 4. BUILDING REQUIREMENTS
CHAPTER 5. ROOM REQUIREMENTS
CHAPTER 6. ENGINEERING SYSTEMS REQUIREMENTS

PART 4 – PERFORMANCE TECHNICAL SPECIFICATIONS

A10 FOUNDATIONS
B20 EXTERIOR ENCLOSURE
B30 ROOFING
C10 INTERIOR CONSTRUCTION
C30 INTERIOR FINISHES
D20 PLUMBING
D30 HVAC
D40 FIRE PROTECTION
D50 ELECTRICAL
F20 SELECTIVE BUILDING DEMOLITION

G10 SITE PREPARATION
G20 SITE IMPROVEMENTS
G30 SITE CIVIL/MECHANICAL UTILITIES

PART 5 – PRESCRIPTIVE SPECIFICATIONS

NOT USED

PART 6 – ATTACHMENTS

ATTACHMENT 1 – CONCEPTUAL PLANS BUILDING 11
ATTACHMENT 2 – CONCEPTUAL PLANS BUILDING 3000
ATTACHMENT 3 – SALVAGE EQUIPMENT
ATTACHMENT 4 – STEAM PIT INVENTORY
ATTACHMENT 5 – STEAM AND CONDENSATE DISTRIBUTION
ATTACHMENT 6 – TRESTLES S-4 REFERENCE DRAWINGS AND REPORT
ATTACHMENT 7 – TRESTLE 737 REFERENCE REPORT
ATTACHMENT 8 – BOILER 5 REFERENCE DRAWING
ATTACHMENT 9 – BOILER 6 REFERENCE DRAWING
ATTACHMENT 10 – ENVIRONMENTAL SURVEY BUILDING 3000
ATTACHMENT 11 – ENVIRONMENTAL SURVEY BUILDING 11 PART 1
ATTACHMENT 12 – ENVIRONMENTAL SURVEY BUILDING 11 PART 2
ATTACHMENT 13 – ENVIRONMENTAL SURVEY STEAM TUNNELS AND PITS
ATTACHMENT 14 – ENVIRONMENTAL SURVEY ABOVEGROUND STEAM LINE
ATTACHMENT 15 – ENVIRONMENTAL SURVEY OF ASSOCIATED BUILDINGS
ATTACHMENT 16 – ENVIRONMENTAL SURVEY OF CHASES
ATTACHMENT 17 – ENVIRONMENTAL SURVEY OF STEAM LINES INSTALLED POST 1991
ATTACHMENT 18 – ENVIRONMENTAL SURVEY OF TANK 11E
ATTACHMENT 19 – NSGL – RADIAL CHIMNEY REPORT
ATTACHMENT 20 – STEAM CHASE LOCATIONS
ATTACHMENT 21 – DD FORM 1354
ATTACHMENT 22 – DISPOSAL OF DON REAL PROPERTY FORM
ATTACHMENT 23 – EXISTING FIRE ALARM SYSTEM DRAWINGS

PART ONE - PROPOSAL FORMS & DOCUMENTS

PART TWO – GENERAL REQUIREMENTS

SECTION 01 11 00

SUMMARY OF WORK
08/11

PART 1 GENERAL

1.1 REFERENCES

The publications listed below form a part of this specification to the extent referenced. The publications are referred to within the text by the basic designation only.

ASTM INTERNATIONAL (ASTM)

ASTM E 2114	(2008) Standard Terminology for Sustainability Relative to the Performance of Buildings

U.S. ENVIRONMENTAL PROTECTION AGENCY (EPA)

Energy Star	(1992; R 2006) Energy Star Energy Efficiency Labeling System

U.S. GREEN BUILDING COUNCIL (USGBC)

LEED	(2002; R 2005) Leadership in Energy and Environmental Design(tm) Green Building Rating System for New Construction (LEED-NC)

1.2 DEFINITIONS

Definitions pertaining to sustainable development are as defined in ASTM E 2114 and as specified.

a. "Environmentally preferable products" have a lesser or reduced effect on the environment in comparison to conventional products and services. This comparison may consider raw materials acquisition, production, manufacturing, packaging, distribution, reuse, operation, maintenance, or disposal of the product.

b. "Indoor environmental quality" is the physical characteristics of the building interior that impact occupants, including air quality, illumination, acoustics, occupant control, thermal comfort, daylighting, and views.

c. "Operational performance" is the functional behavior of the building as a whole or of the building components.

d. "Sustainability" is the balance of environmental, economic, and societal considerations.

1.3 SUBMITTALS

Government approval is required for submittals with a "G" designation; submittals not having a "G" designation are for Contractor Quality Control approval. The following shall be submitted in accordance with Section 01 33 00 SUBMITTAL PROCEDURES:

SD-01 Preconstruction Submittals

Upon receipt of Government Furnished Equipment, the Contractor shall submit records in accordance with paragraph entitled, "Government Furnished Property," of this section.

Submit the following items to the Contracting Officer:

Utility Outage Requests
Utility Connection Requests
Borrow Permits
Excavation Permits
Welding Permits
Burning Permits

SD-07 Certificates

Energy Performance Rating

1.4 WORK COVERED BY CONTRACT DOCUMENTS

1.4.1 Project Description

The work includes:

Phased decommissioing and demolition of the existing steam system after the final commissioning and beneficial occupancy of the last building in the Decentralization of the Steam System DB RFP. Phasing of this RFP is contingent on the progress of the Decentralization of the Steam System;

Demolition of above-ground steam and condensate lines.

Selective demolition of Building 11 in compliance with the State Historic Preservation Office;

Selective demolition of the steam pits/vaults;

Hazardous material abatement as identified in the hazardous material report included in Part 6; and

Selective demolition or removal of the ancillary buildings and associated structures on the Building 11 campus as identified in the Design/Build RFP and incidental related work.

1.4.2 Location

The work shall be located at Naval Station Great Lakes, approximately as indicated. The exact location will be shown by the Contracting Officer.

1.5 CONTRACT DRAWINGS

Documents will be provided on DVD to the Contractor at no charge.

Reference publications will not be furnished.

Contractor shall immediately check furnished drawings and notify the Government of any discrepancies.

1.6 WORK RESCHEDULING

Contractor shall allow for a maximum of 30 calendar days where construction activity is prohibitive. Further allowance for 30 calendar days of excavation and subsurface activity abeyance shall be imposed where other construction activities are permitted. Government will provide 24 hour notification each time the restrictions are invoked.

Normal duty hours for work shall be from 7:00 a.m. to 5:00 p.m., Monday through Friday. Requests for additional work shall require written approval from the Contracting Officer 7 days in advance of the proposed work period.

1.7 PROJECT ENVIRONMENTAL GOALS

Contractor shall distribute copies of the Environmental Goals to each subcontractor and the Contracting Officer. The overall goal for design, construction, and operation is to meet the principles of sustainability. Specifically:

a. Preserve and restore the site ecosystem and biodiversity; avoid site degradation and erosion. Minimize offsite environmental impact.

b. Use the minimum amount of energy, water, and materials feasible to meet the design intent. Select energy and water efficient equipment and strategies.

c. Use environmentally preferable products and decrease toxicity level of materials used.

d. Use renewable energy and material resources.

e. Optimize operational performance (through commissioning efforts) in order to ensure energy efficient equipment operates as intended. Consider the durability, maintainability, and flexibility of building systems.

f. Manage construction site and storage of materials to ensure no negative impact on the indoor environmental quality of the building.

g. Reduce construction waste through reuse, recycling, and supplier take-back.

1.7.1 Independent Verification

1.7.1.1 US Green Building Council (USGBC) - LEED(tm) Rating System

Provide work consistent with USGBC LEED-NC(tm) 2009 (LEED), level silver requirements.

1.7.1.2 EPA Energy Performance Rating

Provide work consistent with drawings in order to meet Energy Star in accordance with design.

1.7.2 OCCUPANCY OF PREMISES

Buildings will be occupied during performance of work under this Contract. Occupancy notifications will be posted in a prominent location in the work area.

Before work is started, the Contractor shall arrange with the Contracting Officer a sequence of procedure, means of access, space for storage of materials and equipment, and use of approaches, corridors, and stairways.

1.7.3 EXISTING WORK

In addition to "FAR 52.236-9, Protection of Existing Vegetation, Structures, Equipment, Utilities, and Improvements":

a. Remove or alter existing work in such a manner as to prevent injury or damage to any portions of the existing work which remain.

b. Repair or replace portions of existing work which have been altered during construction operations to match existing or adjoining work, as approved by the Contracting Officer. At the completion of operations, existing work shall be in a condition equal to or better than that which existed before new work started.

1.8 ON-SITE PERMITS

1.8.1 Utility Outage Requests and Utility Connection Requests

Notify the Contracting Officer at least 72 hours prior to starting excavation work. Contractor is responsible for marking and verifying all utilities not marked.

The Contractor shall verify the elevations of existing piping, utilities, and any type of underground obstruction not indicated or specified to be removed. But indicated in locations to be transversed by piping, ducts, and other work to be installed. Verify elevations before installing new work closer than nearest manhole or other structure at which an adjustment in grade can be made.

Work shall be scheduled to hold outages to a minimum.

Utility outages and connections required during the prosecution of work that affect existing systems shall be arranged for at the convenience of the Government and shall be scheduled outside the regular working hours or on weekends.

Contracting Officer may permit utility outages at his discretion.

Contractor shall not be entitled to additional payment for utility outages and connections required to be performed outside the regular work hours.

Requests for utility outages and connections shall be made in writing to the Contracting Officer at least 21 calendar days in advance of the time required. Each request shall state the system involved, area involved, approximate duration of outage, and the nature of work involved.

1.8.2 Borrow, Excavation, Welding, and Burning Permits

ACTIVITY	SUBMISSION DATE
Borrow Permits	21 calendar days prior to work
Excavation Permits	21 calendar days prior to work
Welding Permits	21 calendar days prior to work

Submission forms will be provided at the Post Award Kick-off Meeting.

Permits shall be posted at a conspicuous location in the construction area.

Burning of trash or rubbish is not permitted at Naval Station Great Lakes.

1.9 LOCATION OF UNDERGROUND FACILITIES

Obtain digging permits prior to start of excavation by contacting the Contracting Officer 15 calendar days in advance. Scan the construction site with Ground Penetrating Radar and electromagnetic or sonic equipment, and mark the surface of the ground or paved surface where existing underground utilities are discovered. Verify the elevations of existing piping, utilities, and any type of underground obstruction not indicated to be specified or removed but indicated or discovered during scanning in locations to be traversed by piping, ducts, and other work to be conducted or installed. Verify elevations before installing new work closer than nearest manhole or other structure at which an adjustment in grade can be made.

1.9.1 Notification Prior to Excavation

Notify the Contracting Officer at least 15 days prior to starting excavation work. Contractor is responsible for locating and marking all utilities by utilizing State of Illinois ‘one call’ Julie (Joint Utility Locating Information for Excavators).

1.10 Navy and Marine Corps (NMCI) Coordination Requirements

1.10.1 NMCI Contractor Access

The NMCI Contractor must be allowed access to the facility towards the end of construction (finishes 90 percent complete, rough-in 100 percent complete, Inside Plant (ISP)/Outside Plant (OSP) infrastructure in place) to provide equipment in the telecommunications rooms and make final connections. Coordinate efforts with the NMCI contractor to facilitate joint use of building spaces during the final phases of construction. After the Contracting Officer has facilitated coordination meetings between the two contractors, the construction contractor must, within one week, incorporate the effort of additional contractor coordination into construction schedule to demonstrate plan for maintaining the contract duration.

PART 2 PRODUCTS

Not used.

PART 3 EXECUTION

Not used.

-- End of Section --

SECTION 01 14 00.05 20

WORK RESTRICTIONS FOR DESIGN-BUILD
01/12

PART 1 GENERAL

1.1 SUBMITTALS

The use of a "G" following a submittal indicates that a Government approval action is required. Submit the following in accordance with Section 01 33 10.05 20 DESIGN SUBMITTAL PROCEDURES and Section 01 33 00.05 20 CONSTRUCTION SUBMITTAL PROCEDURES.

SD-01 Preconstruction Submittals

List of contact personnel; G
Personnel List; G
Vehicle List; G

1.2 SPECIAL SCHEDULING REQUIREMENTS

a. Have materials, equipment, and personnel required to perform the work at the site prior to the commencement of the work.

b. The Naval Station will remain in operation during the entire construction period. Conduct operations so as to cause the least possible interference with normal operations of the activity.

c. Permission to interrupt any Activity roads, railroads, and/or utility service shall be requested in writing a minimum of 15 calendar days prior to the desired date of interruption.

d. The work under this contract requires special attention to the scheduling and conduct of the work in connection with existing operations. Identify on the construction schedule each factor which constitutes a potential interruption to operations.

e. NMCI Contractor Access: The NMCI Contractor must be allowed access to the facility towards the end of construction (finishes 90 percent complete, rough-in 100 percent complete, Inside Plant (ISP)/Outside Plant (OSP) infrastructure in place) to provide equipment in the telecommunications rooms and make final connections. The Contractor will be required to coordinate their efforts with the NMCI contractor to facilitate joint use of building spaces during the final phases of construction and work the coordination effort into the construction schedule. Requirements for NMCI are specified in Part 4, D50 ELECTRICAL and G40 SITE ELECTRICAL UTILITIES.

1.3 CONTRACTOR ACCESS AND USE OF PREMISES

1.3.1 Activity Regulations

Ensure that Contractor personnel employed on the Activity become familiar with and obey Activity regulations including safety, fire, traffic and security regulations. Keep within the limits of the work and avenues of ingress and egress. To minimize traffic congestion, delivery of materials shall be outside of peak traffic hours (6:30 to 8:00 a.m. and 3:30 to 5:00 p.m.) unless otherwise approved by the Contracting Officer. Wear hard hats in designated areas. Do not enter any restricted areas unless required to do so and until cleared for such entry. The Contractor's equipment shall be conspicuously marked for identification.

1.3.1.1 Subcontractors and Personnel Contacts

Furnish a list of contact personnel of the Contractor and subcontractors including addresses and telephone numbers for use in the event of an emergency. As changes occur and additional information becomes available, correct and change the information contained in previous lists.

1.3.1.2 Identification Badges

Obtain access to the installation by participating in the Navy Commercial Access Control System (NCACS) or by obtaining passes each day from the Base Pass and Identification Office. Costs for obtaining passes through the NCACS are the responsibility of the Contractor. One-day passes, issued through the Base Pass and Identification Office will be furnished without charge. Furnish a completed EMPLOYMENT ELIGIBILITY VERIFICATION (DHS FORM I-9) form for all personnel requesting badges. This form is available at http://www.uscis.gov/portal/site/uscis by searching or selecting Employment Verification (Form I-9). Immediately report instances of lost or stolen badges to the Contracting Officer.

a. NCACS Program: NCACS is a voluntary program in which Contractor personnel who enroll, and are approved, are subsequently granted access to the installation for a period up to one year, or the length of the contract, whichever is less, and are not required to obtain a new pass from the Base Pass and Identification Office for each visit. The Government performs background screening and credentialing. Throughout the year the Contractor employee must continue to meet background screening standards. Periodic background screenings are conducted to verify continued NCACS participation and installation access privileges. Under the NCACS program, no commercial vehicle inspection is required, other than for Random Anti-Terrorism Measures (RAM) or in the case of an elevation of Force Protection Conditions (FPCON). Information on costs and requirements to participate and enroll in NCACS is available at http://www.rapidgate.com/vendors/how-to-enroll or by calling 1-877-727-4342. Contractors should be aware that the costs incurred to obtain NCACS credentials, or costs related to any means of access to a Navy Installation, are not reimbursable.

b. One-Day Passes: Participation in the NCACS is not mandatory, and if the Contractor chooses not to participate, the Contractor's personnel will have to obtain daily passes, be subject to daily mandatory vehicle inspection, and will have limited access to the installation. The Government will not be responsible for any cost or lost time associated with obtaining daily passes or added vehicle inspections incurred by non-participants in the NCACS.

1.4 SECURITY REQUIREMENTS

Naval Station Great Lakes, Great Lakes, Illinois, security requirements include the following:

a. Contractor Registration: Register Contractor's commercial trucks with Base Police Truck Investigation Team.

b. Storage and Office Trailer Registration: Register with base police. Trailers shall be lockable and locked when not in use.

c. Equipment Markings: All equipment owned and rented by contractor shall be marked. Provide POC for additional information regarding registration procedures.

PART 2 PRODUCTS

Not used.

PART 3 EXECUTION

Not used.

-- End of Section --

SECTION 01 20 00.05 20

PRICE AND PAYMENT PROCEDURES FOR DESIGN-BUILD
01/12

PART 1 GENERAL

1.1 SUBMITTALS

Government approval is required for submittals with a "G" designation; submittals not having a "G" designation are for Contractor Quality Control approval. The following shall be submitted in accordance with Section 01 33 10.05 20 DESIGN SUBMITTAL PROCEDURES and Section 01 33 00.05 20 CONSTRUCTION SUBMITTAL PROCEDURES:

SD-01 Preconstruction Submittals

1.2 SCHEDULE OF PRICES

1.2.1 Real Property Assets

Provide the Draft and Interim DD Form 1354, Transfer and Acceptance of Military Real Property filled in with the appropriate Real Property Unique Identifiers (RPUID) and related construction Category Codes. Provide the Draft DD Form 1354 that uses the appropriate division of the RPUIDs/ Category Codes to represent the designed real property assets that apply to this contract and include all associated cost. The Contractor shall meet with the Contracting Officer and the Real Property Accounting Officer during the Post Award Kickoff Meeting and the Project Closeout Meetings to modify and include any necessary changes to the DD Form 1354. The Contractor shall provide the Interim DD Form 1354 that uses the appropriate division of the RPUIDs/ Category Codes to represent the final constructed facility and include all associated cost. Coordinate the Contractor's Price and Payment structure with the structure of the RPUIDs / Category Codes.

Divide detailed asset breakdown into the RPUIDs and related construction Category Codes and populate associated costs which represent all aspects of the work. Where assets diverge into multiple RPUID/ Category Codes, divide the asset and provide the proportion of the assets in each RPUID/ Category Code. Assets and related RPUID/ Category Codes may be modified by the Contracting Officer as necessary during the course of the work. Coordinate identification and proportion of these assets with the Government Real Property Accounting Officer.

Cost data accumulated under this section are required in the preparation of DD Form 1354. Coordinate with section 01 33 10.05 20 DESIGN SUBMITTAL PROCEDURES in paragraph titled "DD Form 1354".

1.3 CONTRACT MODIFICATIONS

In conjunction with the Contract Clause "DFARS 252.236-7000, Modification Proposals-Price Breakdown," and where actual ownership and operating costs of construction equipment cannot be determined from Contractor accounting records, equipment use rates shall be based upon the applicable provisions of the EP-1110-1-8.

1.4 CONTRACTOR'S INVOICE AND CONTRACT PERFORMANCE STATEMENT

1.4.1 Content of Invoice

Requests for payment will be processed in accordance with the Contract. Clause FAR 52.232-27, Prompt Payment Construction Contracts and FAR 52.232-5, Payments Under Fixed-Price Construction Contracts. The Requests for payment shall include the documents listed below:

a. The Contractor's invoice, on NAVFAC Form 7300/30 furnished by the Government, showing in summary form, the basis for arriving at the amount of the invoice. Form 7300/30 shall include certification by Quality Control (QC) Manager as required by the contract.

b. The Earned Value Report from the cost-loaded NAS, showing in detail: the estimated cost, percentage of completion, and value of completed performance for each of the construction categories stated in this contract.

c. Updated Project Schedule and reports required by the contract

d. Contractor Safety Self Evaluation Checklist

e. Other supporting documents as requested

f. Updated copy of submittal register.

g. Invoices not completed in accordance with contract requirements will be returned to the Contractor for correction of the deficiencies.

h. Subcontractor and supplier payment certification.

i. Materials on Site.

j. Affidavit to accompany invoice (LANTDIV NORVA Form 4-4235/4 (Rev.5/81)).

1.4.2 Submission of Invoices

If NFAS Clause 5252.232-9301 is included in the contract, the documents listed in paragraph titled " Content of Invoice" above shall be provided in their entirety as an attachment in Wide Area Work Flow (WAWF) for each invoice submitted. The maximum size of each WAWF attachment is two megabytes, but there are no limits on the number of attachments. If a document cannot be attached in WAWF due to system or size restriction it shall be provided as instructed by the Contracting Officer. All other paper invoices shall be forwarded with specific marking on the envelope. This marking shall be in the front lower left hand corner, in large letters, "INVOICES - ENCLOSED."

Monthly invoices and supporting forms for work performed through the anniversary award date of the contract shall be submitted to the Contracting Officer within 5 calendar days of the date of invoice For example, contract award date is the 7th of the month, the date of each monthly invoice shall be the 7th and the invoice shall be submitted by the 12th of the month.

1.4.3 Final Invoice

a. A final invoice shall be accompanied by the certification required by DFARS 252.247.7023 TRANSPORTATION OF SUPPLIES BY SEA, and the Contractor's Final Release. If the Contractor is incorporated, the Final Release shall contain the corporate seal. An officer of the corporation shall sign and the corporate secretary shall certify the Final Release.

b. For final invoices being submitted via WAWF, the original Contractor's Final Release Form and required certification of Transportation of Supplies by Sea must be provided directly to the respective Contracting Officer prior to submission of the final invoice. Once receipt of the original Final Release Form and required certification of Transportation of Supplies by Sea has been confirmed by the Contracting Officer, the Contractor shall then submit final invoice and attach a copy of the Final Release Form and required certification of Transportation of Supplies by Sea in WAWF.

c. Final invoices not accompanied by the Contractor's Final Release and required certification of Transportation of Supplies by Sea will be considered incomplete and will be returned to the Contractor.

1.5 PAYMENTS TO THE CONTRACTOR

Payments will be made on submission of itemized requests by the Contractor which comply with the requirements of this section, and will be subject to reduction for overpayments or increase for underpayments made on previous payments to the Contractor.

1.5.1 Obligation of Government Payments

The obligation of the Government to make payments required under the provisions of this contract will, at the discretion of the Contracting Officer, be subject to reductions and/or suspensions permitted under the FAR and agency regulations including the following in accordance with "FAR 32.503-6:

a. Reasonable deductions due to defects in material or workmanship;

b. Claims which the Government may have against the Contractor under or in connection with this contract;

c. Unless otherwise adjusted, repayment to the Government upon demand for overpayments made to the Contractor; and

d. Failure to provide up to date record drawings not current as stated in Contract Clause "FAC 5252.236-9310, Record Drawings."

1.5.2 Payment for Onsite and Offsite Materials

Progress payments may be made to the contractor for materials delivered on the site, for materials stored off construction sites, or materials that are in transit to the construction sites under the following conditions:

a. FAR 52.232-5(b) Payments Under Fixed Price Construction Contracts.

b. Materials delivered on the site but not installed, including completed preparatory work, and off-site materials to be considered for progress payment shall be major high cost, long lead, special order, or specialty items, not susceptible to deterioration or physical damage in storage or in transit to the construction site. Examples of materials acceptable for payment consideration include, but are not limited to, structural steel, non-magnetic steel, non-magnetic aggregate, equipment, machinery, large pipe and fittings, precast/prestressed concrete products, plastic lumber (e.g., fender piles/curbs) and high-voltage electrical cable. Materials not acceptable for payment include consumable materials such as nails, fasteners, conduits, gypsum board, glass, insulation, and wall coverings.

c. Materials to be considered for progress payment prior to installation shall be specifically and separately identified in the Contractor's estimates of work submitted for the Contracting Officer's approval in accordance with Schedule of Prices requirement of this contract. Requests for progress payment consideration for such items shall be supported by documents establishing their value and that the title requirements of the clause at FAR 52.232-5 have been met.

d. Materials are adequately insured and protected from theft and exposure.

e. Provide a written consent from the surety company with each payment request for offsite materials.

f. Materials to be considered for progress payments prior to installation shall be stored either in the Continental United States. Other locations are subject to written approval of the Contracting Officer.

PART 2 PRODUCTS

Not used.

PART 3 EXECUTION

Not used.

-- End of Section --

SECTION 01 30 00.05 20

ADMINISTRATIVE REQUIREMENTS FOR DESIGN-BUILD
03/13

PART 1 GENERAL

1.1 SUBMITTALS

The use of a "G" following a submittal indicates that a Government approval action is required. Submit the following in accordance with Section 01 33 10.05 20 DESIGN SUBMITTAL PROCEDURES and Section 01 33 00.05 20 CONSTRUCTION SUBMITTAL PROCEDURES.

SD-01 Preconstruction Submittals

Insurance; G

1.2 MINIMUM INSURANCE REQUIREMENTS

Procure and maintain during the entire period of performance under this contract the following minimum insurance coverage:

a. Comprehensive general liability: $500,000 per occurrence

b. Automobile liability: $200,000 per person, $500,000 per occurrence for bodily injury, $20,000 per occurrence for property damage

c. Workmen's compensation as required by Federal and State workers' compensation and occupational disease laws.

d. Employer's liability coverage of $100,000, except in States where workers compensation may not be written by private carriers,

e. Others as required by the State.

Refer to Section 01 33 10.05 20, CONSTRUCTION SUBMITTAL PROCEDURES for typical preconstruction submittals similar to insurance.

1.3 CONTRACTOR PERSONNEL REQUIREMENTS

1.3.1 Subcontractor Special Requirements

1.3.1.1 Asbestos Containing Material

All contract requirements of PART 4, F20 SELECTIVE BUILDING DEMOLITION, assigned to the Private Qualified Person (PQP) shall be accomplished directly by a first tier subcontractor.

1.3.1.2 HVAC TAB

All contract requirements of TAB work required by PART 4 D30, HVAC, shall be accomplished directly by a first tier subcontractor. No TAB work required by PART 4, D30, HVAC, shall be accomplished by a second tier subcontractor.

1.3.1.3 Qualified Testing Organization

All contract requirements of work required to be performed by a Qualified Testing Organization in PART 4, D50 ELECTRICAL and G40 SITE ELECTRICAL UTILITIES, shall be accomplished directly by a first tier subcontractor. No work to be performed by a Qualified Testing Organization, required by PART 4, D50 and G40 shall be accomplished by a second tier subcontractor.

1.4 SUPERVISION

Have at least one qualified supervisor capable of reading, writing, and conversing fluently in the English language on the job site during working hours. In addition, the Quality Control (QC) representative shall also have fluent English communication skills.

1.5 AVAILABILITY OF CADD DRAWING FILES

After award and upon request, the electronic "Computer-Aided Drafting and Design (CADD)" drawing files will be made available to the Contractor for use in preparation of construction drawings and data related to the referenced contract subject to the following terms and conditions.

Data contained on these electronic files shall not be used for any purpose other than as a convenience in the preparation of construction drawings and data for the referenced project. Any other use or reuse shall be at the sole risk of the Contractor and without liability or legal exposure to the Government. The Contractor shall make no claim and waives to the fullest extent permitted by law, any claim or cause of action of any nature against the Government, its agents or sub consultants that may arise out of or in connection with the use of these electronic files. The Contractor shall, to the fullest extent permitted by law, indemnify and hold the Government harmless against all damages, liabilities or costs, including reasonable attorney's fees and defense costs, arising out of or resulting from the use of these electronic files.

These electronic CADD drawing files are not construction documents. Differences may exist between the CADD files and the corresponding construction documents. The Government makes no representation regarding the accuracy or completeness of the electronic CADD files, nor does it make representation to the compatibility of these files with the Contractors hardware or software. In the event that a conflict arises between the signed and sealed construction documents prepared by the Government and the furnished CADD files, the signed and sealed construction documents shall govern. The Contractor is responsible for determining if any conflict exists. Use of these CADD files does not relieve the Contractor of duty to fully comply with the contract documents, including and without limitation, the need to check, confirm and coordinate the work of all contractors for the project.

If the Contractor uses, duplicates and/or modifies these electronic CADD files for use in producing construction drawings and data related to this contract, all previous indicia of ownership (seals, logos, signatures, initials and dates) shall be removed.

1.6 CLEANUP

Leave premises "broom clean." Clean interior and exterior glass surfaces exposed to view; remove temporary labels, stains and foreign substances; polish transparent and glossy surfaces; vacuum carpeted and soft surfaces. Clean equipment and fixtures to a sanitary condition. Replace filters of operating equipment. Clean debris from roofs, gutters, downspouts and drainage systems. Sweep paved areas and rake clean landscaped areas. Remove waste and surplus materials, rubbish and construction facilities from the site.

PART 2 PRODUCTS

Not used.

PART 3 EXECUTION

Not used.

-- End of Section --

SECTION 01 31 19.05 20

POST AWARD MEETINGS
05/14

PART 1 GENERAL

1.1 SUMMARY

This document includes post-award requirements for project kickoff and subsequent design and preconstruction meetings.

1.2 SUBMITTALS

The use of a "G" following a submittal indicates that a Government approval action is required. Submit the following in accordance with Section 01 33 10.05 20 DESIGN SUBMITTAL PROCEDURES.

SD-01 Preconstruction Submittals

Design Submittal Packaging Proposal; G

Project Schedule; G

Performance Assessment Plan (PAP); G

Design Presentation Concept Site and Floor Plans; G

CDW Facilitator Experience Resume; G

CDW Preliminary Concept Design; G

CDW Cost Estimate; G

Concept Design Workshop Report; G

1.3 POST AWARD KICKOFF MEETING

The Post Award Kickoff (PAK) meeting is made up of Contract Administration, Concept Design Presentation/Design Development or Concept Design Workshop (CDW), Partnering, and Scheduling. If mutually beneficial to the Contractor and the Government, these four elements may be addressed in a single multi day meeting but most often multiple scheduled meetings are required.

1.3.1 PAK Meeting Schedule and Location

Within 21 calendar days after contract award, and prior to commencing work, meet with the Contracting Officer for the PAK meeting(s). The meeting shall be located at a specific time and place to be determined by the Contracting Officer.

1.3.2 PAK Meeting Outcomes

The meeting(s) outcomes are:

a. Integrate the Contractor and all client representatives into the project team.

b. Achieve consensus from the project team on any issues and concerns with the Contractor's technical proposal and the User's functional requirements. Confirm the design is within the project budget.

c. Establish and explain policies and procedures for completion of a successful project.

d. Establish clear lines of communication and points of contact for Government and Contractor team members.

e. Obtain an acceptable conceptual design including floor and site plans, signed by the client, Contractor and other key team members.

f. Establish project design schedule, design submittal packaging, and preliminary construction schedule in accordance with Section 01 32 17.05 20 NETWORK ANALYSIS SCHEDULE (NAS) FOR DESIGN-BUILD. Discuss design milestones and events that will be included in the Quality Control Communication Plan.

g. Establish clear expectations and schedules for facility turnover, providing DD Form 1354 asset management records, eOMSI submittals, Guiding Principle Validation, Third Party Certification (if applicable), and training of Government maintenance personnel.

h. Establish procedure for design packages reviews, Contractor's resolution to comments, and Government's role in review of packages.

i. Establish clear expectations for the Concept Design Workshop.

1.3.3 PAK Meeting Contractor Attendees

The following Contractor key personnel shall attend the PAK: Project Manager, Project Scheduler, Lead Designer-of-Record (DOR), Design Staff responsible for each architectural/engineering discipline when facility design is discussed, Superintendent, QC Manager, and the Commissioning Authority (CA). Optional attendees include: Principal, Assistant Project Manager, major subcontractors and specialized supplemental QC personnel.

1.3.4 Contract Administration

Contract administration roles and responsibilities will be addressed.

1.3.5 Design Presentation/Development (DP/D)

The Contractor shall lead discussions to develop an understanding of the facility design that the accepted technical proposal represents with the Government users and maintainers of the facility. Develop site plans, floor plans, exterior finish materials, and building elevations to conduct working sessions with the Government meeting attendees. The purpose of the DP/D Meeting is to confirm the appropriateness of the facility design and develop acceptable alternatives if changes are needed. The Contractor shall anticipate that Government Facility Users represented at the DP/D Meeting will provide additional functional information. Incorporate functional design changes into the facility design as required to meet the needs of the Users. At the end of the DP/D Meeting the Contractor shall provide either assurance that the updated design can be built with-in the budget or identify potential cost modification items and establish a follow-on DP/D Meeting to finalize a design that will include trade-offs to bring the project within the budget.

1.3.5.1 Design Presentation/Development Contractor Meetings Attendees

The following Contractor key personnel shall attend the Design Presentation: Project Manager, Project Scheduler, Cost Estimator, Lead Designer of Record, Design Staff responsible for each architectural/engineering discipline when facility design is discussed, Major Subcontractors, and DQC.

1.3.6 Partnering

To most effectively accomplish this contract, the Government requires the formation of a cohesive partnership within the Project Team whose members are from the Government, Contractor and its Subcontractors. Key Personnel from the Supported Command, End User (who will occupy the facility), NAVFAC (Echelon III and/or IV), Navy Region/Installation, Contractor and Subcontractors and the Designer of Record will be invited to participate in the Partnering process. The Partnership will draw on the strength of each organization in an effort to achieve a project without any safety mishaps, conforming to the Contract, within budget and on schedule.

Information on the Partnering Process and a list of Key and Optional personnel who should attend the Partnering meeting are available from the Contracting Officer.

FORMAL PARTNERING: The Contractor shall host the Partnering sessions with Key personnel of the Project Team, including Contractor's personnel and Government personnel. The Contractor shall pay all costs associated with the Partnering effort including the Facilitator, meeting room and other incidental items.

Before a Partnering session, the contractor shall coordinate with the Facilitator all requirements for incidental items (audio-visual equipment, easels, flipchart paper, colored markers, note paper, pens/pencils, colored flash cards, etc.) and have these items available at the Partnering session. The contractor will copy documents for distribution to all attendees. The participants shall bear their own costs for meals, lodging and transportation associated with Partnering.

The Facilitator shall be experienced in conducting Partnering Workshops and acceptable to both the Government and Contractor. The Facilitator is responsible for leading the team in a timely manner and making sure that issues are identified and resolved. A list of Partnering Facilitators is available from the Contracting Officer.

a. The Initial Partnering Session shall be a duration of one day minimum. It shall be located at a place off the construction site as agreed to by the Contracting Officer and the Contractor. It may take place concurrently with the Pre Construction Meeting.

b. The Follow-on Partnering Session(s) generally lasts a half day or less. They will be scheduled at 3 to six month intervals or when needed. Participants are encouraged to utilize electronic means to expedite meetings. Meetings may be held at a location off Base, at the project site, or in a Government Facility on Base. Follow-on meetings may be held concurrently with other scheduled meetings. Attendees need only be those required to resolve current issues. The same Facilitator used in the Initial Partnering session is recommended to achieve best results and for continuity.

1.3.7 Performance Assessment Plan (PAP)

The Performance Assessment Plan (PAP) shall be used to document design innovation and budget management, provide performance feedback to the Contractor, and as a basis for interim and final evaluations in the Construction Contractor Appraisal System (CCASS) on-line database.

It is the intent of the Government to establish the PAP based on tangible, measurable indicators of outstanding contractor performance, and on commitments made in the Contractor's proposal. The initial PAP may be found on the NAVFAC Design-Build Request for Proposal Website in RFP PART 6

Attachments. Review and finalize the initial PAP during the Partnering Session. During the initial Partnering Session, the Government, the Contractor, the Designer-of-Record, and the Client will establish the PAP. Following the establishment of the PAP, the Contractor will present it, with his input, for update and discussion at projects meetings which discuss project performance. Submit an updated PAP on a monthly basis with the invoice for that period as a minimum.

1.3.9 Project Schedule

Provide in accordance with Section 01 32 17.05 20 NETWORK ANALYSIS SCHEDULES (NAS) FOR DESIGN-BUILD.

1.4 DESIGN QUALITY ASSURANCE MEETINGS

After Government Quality Assurance (QA) of each Design Submittal has been completed, meet with the Government for a one-day conference to discuss review comments for the specific design submittal.

Provide consolidated copies of all Government comments with annotations of Contractor's action beside them. Notify the Contracting Officer in writing within five (5) days after receipt of Government's comments if the Contractor disagrees with comments technically or interprets comments to exceed the requirements of the contract.

1.4.1 Design QA Meeting Attendees

The following Contractor key personnel shall attend the design QA meetings: Project Manager, QC Manager, Commissioning Authority, and Contractor's Design Staff (architect and engineering disciplines related to topics to be discussed).

1.4.2 Design QA Meeting Location

Meetings shall be located at the office of the Contracting Officer's QA Team or may be conducted at other locations or by other electronic means if mutually acceptable to all parties.

1.4.3 Minimum Design QA Meeting Agenda

Address all Government comments that are unresolved and present clarification or supporting information requested by the Contracting Officer's QA team during the previous meeting.

1.5 PRECONSTRUCTION MEETING

Meet with the Contracting Officer to discuss construction items of concern to the Government and the Contractor such as outages, storage, trailer location, disposal of construction debris, and safety, at a location to be determined by the Contracting Officer. The Preconstruction meeting may take place with the PAK meeting or at any time prior to mobilization and before any construction work begins.

1.6 RECURRING MEETINGS

1.6.1 Quality Control and Production Meetings

Quality Control and Production Meetings in accordance with Section 01 45 00.05 20 DESIGN AND CONSTRUCTION QUALITY CONTROL.

1.6.2 Safety Meetings

Safety Meetings in accordance with Section 01 35 26.05 20 GOVERNMENT SAFTETY REQUIREMENTS FOR DESIGN-BUILD.

1.6.3 eOMSI Meetings

Refer to Section 01 78 24.00 20 FACILITY ELECTRONIC OPERATIONS AND MAINTENANCE INFORMATION (eOMSI) for requirements.

1.6.4 Sustainability Documentation Progress Meetings

Most sustainability documentation progress meetings may be combined with other design, construction, and project closeout meetings; however additional meetings are required post-design and post-construction. Refer to Section 01 33 29.05 20 SUSTAINABILITY REQUIREMENTS FOR DESIGN-BUILD for meeting requirements.

1.7 FACILITY TURNOVER PLANNING MEETINGS

Key personnel will meet to identify strategies to ensure the project is carried to expeditious closure and turnover to the Client. Start the turnover process at the PAK Meeting and convene the Facility Turnover Meetings once the project has reached approximately 75% completion or three to six months prior to Beneficial Occupancy Date (BOD), whichever comes first. The Contracting Officer's Representative will lead the meetings and guide the discussions based on an agenda provided by the Government. The Facility Turnover effort shall include the following:

a. PAK Meeting

1. Contracting Officer's Technical Representative (COTR) will provide the NRZ Checklist and the Contractor, Client, and NAVFAC Representatives will compare Contractor's schedule to NRZ Checklist to ensure all Contractor Checklist Items are included in the schedule and to discuss the scheduling impact of Client and NAVFAC Checklist Items.

2. Discuss the requirements of creating the Draft and finalizing the Interim DD Form 1354 to provide asset management records to the Government. Refer to Section 01 33 10.05 20 DESIGN SUBMITTAL PROCEDURES for requirements.

b. Facility Turnover Meetings

1. Fill in the NRZ Checklist including Contractor, Client, and NAVFAC Checklist Items and assigned a person responsible for each item and a due date. The Contracting Officer's Representative will facilitate the assignment of responsibilities and fill out the NRZ Checklist.

2. Review the Contractor's updated schedule. The Contractor shall develop a POAM for the completion of all Contractor, Client, and NAVFAC Checklist items.

3. Confirm that all NRZ Checklist items will be completed on time for the scheduled Facility Turnover.

4. Assign responsibility and schedule for the provision of all information necessary to complete the Final eOMSI Data and Documents Submittals for facility turnover.

5. Assign responsibility and schedule for the provision of all documentation necessary to achieve Guiding Principle Validation and also Third Party Certification, if applicable.

6. Schedule and coordinate the facility training of Government maintenance personnel.

1.7.1 Facility Turnover Meeting Attendees

The following key personnel shall attend the Facility Turnover Meetings: Contractor QC Manager, Design Quality Control Manager, Superintendent, Major Subcontractors, Designer-of-Record, Contracting Officer's Representative, Project Sponsor, Representative(s) of NAVFAC, the Facility Owner/ Real Property Accounting Officer, Public Works Facility Maintenance Specialist, and the Client.

PART 2 PRODUCTS

Not Used.

PART 3 EXECUTION

Not Used.

-- End of Section --

SECTION 01 32 17.05 20

NETWORK ANALYSIS SCHEDULES (NAS) FOR DESIGN-BUILD
2/13

PART 1 GENERAL

1.1 DESCRIPTION

The Contractor is responsible for scheduling all design, procurement and construction. A single schedule shall logically incorporate all design and construction for the entire project. Unless otherwise indicated, the contractor may begin construction when design is signed, stamped and submitted to the Government via the Contractor's quality control organization.

If Government approval is required for any portion of a final signed and sealed design package prior to construction, that review time shall be included in the schedule. The schedule shall also include times for procurement, Contractor quality control and construction, acceptance testing and training. Refer to Specification Section 01 33 00.05 20 ONSTRUCTION SUBMITTAL PROCEDURES to determine if any items require Government approval prior to construction; if any are required, that submittal review time shall be included in the schedule.

The schedule is a tool to manage the project, both for Contractor and Government activities. It will also be used to measure progress and to evaluate time extensions. If cost-loaded, it will provide the basis for progress payments.

The Contractor shall use the Critical Path Method (CPM) and the Precedence Diagram Method (PDM) to satisfy time and cost applications. For consistency, when scheduling software terminology is used in this specification, the terms in Primavera's scheduling programs are used.

1.2 SUBMITTALS

The use of a "G" following a submittal indicates that a Government approval action is required. Submit the following in accordance with Section 01 33 10.05 20 DESIGN SUBMITTAL PROCEDURES and Section 01 33 00.05 20 CONSTRUCTION SUBMITTAL PROCEDURES, except as modified in this contract.

SD-01 Preconstruction Submittals

Qualifications; G

Design Baseline Network Analysis Schedule Package; G

Construction Baseline Network Analysis Schedule Package; G

SD-07 Certificates

Monthly Network Analysis Schedule Updates; G

SD-11 Closeout Submittals

As-Built Schedule; G

1.3 SCHEDULE ACCEPTANCE PRIOR TO START OF WORK

Government review comments on the Contractor's schedule(s) shall not relieve the Contractor from compliance with requirements of the Contract Documents.

The Design Baseline Network Analysis Schedule (NAS) shall be submitted and presented to the Government at the PAK Meeting. The acceptance of a Design Baseline NAS is a condition precedent to processing Contractor's pay request(s) for design activities/items of work.

Only bonds shall be paid prior to acceptance of the Design Baseline Network Analysis Schedule (NAS).

The most current updated design schedule shall accompany each design submittal.

The Contracting Officer and Contractor shall participate in a preliminary meeting(s) to discuss the proposed schedule and requirements of this section prior to the Contractor preparing the Construction Baseline Network Analysis Schedule.

The acceptance of a Construction Baseline NAS is a condition precedent to:

a. The Contractor starting work on the demolition or construction stage(s) of the contract.

b. Processing Contractor's pay request(s) for construction activities/items of work.

c. Review of any schedule updates

Submittal of the Baseline Network Analysis Schedules, and subsequent schedule updates, shall be understood to be the Contractor's certification that the submitted schedule meets all of the requirements of the Contract Documents, represents the Contractor's plan on how the work shall be accomplished, and accurately reflects the work that has been accomplished and how it was sequenced (as-built logic).

1.4 SOFTWARE

Project schedules must be prepared and maintained using Primavera P3, Primavera SureTrak or current mandated scheduling program. Save files in Concentric P3 or current mandated scheduling program file format, compatible with the Governments version of the scheduling program. Importing data into P3/SureTrak/current mandated scheduling program using data conversion techniques or third party software will be cause for rejection of the submitted schedule.

1.5 QUALIFICATIONS

The designated Scheduler for the project shall have prepared and maintained at least 3 previous schedules of similar size and complexity of this contract using SureTrak/P3 or current mandated scheduling program. A resume outlining the qualifications of the Scheduler shall be submitted for acceptance to the Contracting Officer. Payment will not be processed until an acceptable Scheduler is provided.

1.6 NETWORK SYSTEM FORMAT

The system shall include time scaled logic diagrams and specified reports.

1.6.1 Diagrams

Provide Time-scaled Logic Diagram printed in color on ANSI D size sheets. The diagram shall clearly show activities on the critical path. Include the following information for each activity:

a. Activity ID

b. Activity Description

c. Original Duration in Work Days

d. Remaining duration

e. Percent Complete

f. Early Start Date

g. Early Finish Date

h. Total Float

1.6.2 Schedule Activity Properties and Level of Detail

The NAS shall identify all Design, Government, Construction Quality Management (CQM), Construction activities planned for the project and all other activities that could impact project completion if delayed. Separate activities shall be created for each Phase, Area, Floor Level and Location the activity is occurring. Activity categories included in the schedule are specified below.

With the exception of the Contract Award and Contract Completion Date (CCD) milestone activities, no activity shall be open-ended; each activity shall have predecessor and successor ties. Once an activity exists on the schedule it may not be deleted or renamed to change the scope of the activity and shall not be removed from the schedule logic without approval from the Contracting Officer. The ID number for a deleted activity shall not be re-used for another activity. No more than 20 percent of the activities shall be critical or near critical. Critical is defined as having zero days of Total Float. "Near Critical" is defined as having Total Float of 1 to 14 days. Contractor activities shall be driven by calendars that reflect Saturdays, Sundays and all Federal Holidays as non-work days. Government availability for construction submittal review, meeting attendance, performance verification testing, acceptance inspections, etc, will be extremely limited between Christmas and New Years Days.

1.6.2.1 Activity Categories

a. Design Activities: Design activities shall include design decision points, design submittal packages, including any critical path submittals for Fast Tracked Phases. Review times for design development packages shall be included in the schedule. Refer to Specification Section 01 33 10.05 20 Design Submittal Procedures, for specific requirements.

b. Procurement Activities: Examples of procurement activities include, but are not limited to; Material/equipment submittal preparation, submittal and approval of material/equipment; material/equipment fabrication and delivery, and material/equipment on-site. As a minimum, separate procurement activities will be provided for critical items, long lead items, items requiring government approval and material/equipment procurement for which payment will be requested in advance of installation. The Contractor shall show each delivery with relationship tie to the Construction Activity specifically for the delivery.

c. Government Activities: Government and other agency activities that could impact progress shall be clearly identified. Government activities include, but are not limited to; Government approved submittal reviews, Government conducted inspections/tests, environmental permit approvals by State regulators, utility outages, Design Start, Construction Start, (including Design/Construction Start for each Fast-Track Phase, and delivery of Government Furnished Material/Equipment.

d. Quality Management (QM) Activities: CQM Activities shall identify the Preparatory Phase and Initial Phase for each Definable Feature of Work identified in the Contractor's Quality Control Plan. These activities shall be added to each Three-Week Look Ahead Schedule referenced in the paragraph entitled "THREE-WEEK LOOK AHEAD SCHEDULE" and will also be included in each monthly update. The Follow-up Phase will be represented by the Construction Activities in the Baseline Schedule and in the schedule updates.

e. Construction Activities: No on-site construction activity shall have a duration in excess of 20 working days. Separate construction activities shall be created for each Phase, Area, Floor Level and Location the activity is occurring. Contractor activities shall be driven by calendars that reflect Saturdays, Sundays and all Federal Holidays as non-work days, unless otherwise defined in this contract. Government availability for construction submittal review, meeting attendance, performance verification testing, acceptance inspections, etc, will be extremely limited between Christmas and New Years Day.

f. Turnover and Closeout Activities: Include a separate section with all items on the Navfac Red Zone Checklist/POAM that are applicable to this project. The checklist will be provided at the PAK meeting. As a minimum, this will include all testing, specialized inspection activities, Pre-Final inspection, Punch List Completion, Final Inspection and Acceptance. Add a milestone for the Facility Turnover Planning Meeting at approximately 75 percent construction contract completion or three to six months prior to BOD, whichever is sooner.

1.6.2.2 Contract Milestones and Constraints

a. Project Start Date Milestones: The Contractor shall include as the first activity on the schedule a start milestone titled "Contract Award", which shall have a Mandatory Start constraint equal to the Contract Award Date.

b. Projected Completion Milestone: The Contractor shall include an unconstrained finish milestone on the schedule titled "Projected Completion". Projected Completion is defined as the point in time the Government would consider the project complete and ready for its intended use. This milestone shall have the Contract Completion (CCD) milestone as its only successor.

c. Contract Completion Date (CCD) Milestone: The Contractor shall include as the last activity on the schedule a finish milestone titled "Contract Completion (CCD)", which shall have a Mandatory Finish constraint equal to the current Contract Completion Date. Calculation of schedule updates shall be such that if the finish of the "Projected Completion" milestone falls after the contract completion date, then negative float will be calculated on the longest path and if the finish of the "Projected Completion" milestone falls before the contract completion date, the float calculation shall reflect positive float on the longest path. The only predecessor to the Contract Completion Date Milestone shall be the Projected Completion milestone .

1.6.2.3 Activity Code

At a minimum, the Contractor shall establish activity codes identified in this specification and 3 additional activity codes identified by the Contracting Officer. Once established, activity codes and values cannot be changed without approval by the Contracting Officer.

a. Phase: All activities shall be assigned a 4-digit code value based on the contract phase it occurs in.

b. Area Code: All activities shall be assigned an area code value identifying the Area in which the activity occurs. Activities shall not belong to more than one area. Area is defined as a distinct space, function or activity category; such as, separate structure(s), sitework, project summary, construction quality management, material/equipment procurement, etc.

c. Work Item: All activities in the project schedule shall be assigned a 4-digit Work Item code value. Examples of Work Item code values include but are not limited to water lines, drain lines, building pad and foundation, slab on grade, walls and columns, suspended slab, roof structure, roofing, exterior finish systems, interior rough-in, and finishes, etc.

d. Location 1: Assign a 4-digit Location 1 code value to activities associated with multistory structures. Code values are used to identify the floor level where an activity is occurring.

e. Location 2: Assign a 4-digit Location 2 code value to all activities to identify the location within an Area, Work Item or Building Level that an activity is occurring.

f. Responsibility Code: All activities in the project schedule shall be identified with the party responsible for completing the task. Activities shall not belong to more than one responsible party.

1.6.2.4 Anticipated Weather Delays

The Contractor shall use the National Oceanic and Atmospheric Administration's (NOAA) historical monthly averages for the NOAA location closest to the project site as the basis for establishing a "Weather Calendar" showing the number of anticipated non-workdays for each month due to adverse weather, Saturdays, Sundays and all Federal Holidays as non-work days.

Assign the Weather Calendar to any activity that could be impacted by adverse weather. The Contracting Officer will issue a modification in accordance with the contract clauses, giving the Contractor a time extension for the difference of days between the anticipated and actual adverse weather delay if the number of actual adverse weather delay days exceeds the number of days anticipated for the month in which the delay occurs and the adverse weather delayed activities critical to contract completion. A lost workday due to weather conditions is defined as a day in which the Contractor cannot work at least 50 percent of the day on the impacted activity.

1.6.2.5 Anticipated Security Delays

The contractor shall allow in the schedule a total of 5 lost workdays per calendar year for instances where base access is not permitted due to a security related closure which causes a delay in the work. A lost workday is defined as a day in which the Contractor cannot work at least 50 percent of the day on the closed installation. If the installation is closed for a period longer than 5 workdays per calendar year, the Contracting Officer will issue a no cost contract modification as applicable in accordance with the contract clauses extending the contract completion date where the critical path has been impacted.

1.6.2.6 Cost Loading

a. Cost Loading Activities: Costs for incremental design preparation shall be assigned to the respective design phase submittal milestone(s). Material and Equipment Costs for which payment will be requested in advance of installation shall be assigned to their respective procurement activity (i.e., the material/equipment on-site activity). All other construction costs shall be assigned to their respective Construction Activities. The value of inspection/testing activities shall not be

less than 10 percent of the total costs for Procurement and Construction Activities. Evenly disperse overhead and profit to each activity over the duration of the project.

b. Quantities and Units of Measure: Each cost loaded activity shall have a detailed quantity breakdown and unit of measure.

1.6.3 Schedule Software Settings and Restrictions

a. Activity Constraints: Date/time constraint(s), other than those required by the contract, will not be allowed unless accepted by the Contracting Officer. Identify any constraints proposed and provide an explanation for the purpose of the constraint in the Narrative Report.

b. Default Progress Data Disallowed: Actual Start and Actual Finish dates on the CPM schedule shall match the dates on the Contractor Quality Control and Production Reports.

c. Software Settings: Schedule calculations and Out-of-Sequence progress (if applicable) shall be handled through Retained Logic, not Progress Override. All activity durations and float values will be shown in days. Activity progress will be shown using Remaining Duration. Default activity type will be set to "Task". The project "Must Finish By" date shall be left blank.

1.6.4 Required Tabular Reports

The following reports shall be included with the schedule and update submittals:

a. Log Report: Listing of all changes made between the previous schedule and current updated schedule.

b. Narrative Report: Identify and justify; 1) Progress made in each area of the project; 2) Critical Path; 3) Date/time constraint(s), other than those required by the contract 3) Changes in the following; added or deleted activities, original and remaining durations for activities that have not started, logic, milestones, planned sequence of operations, critical path, and cost loading; 4) Any decrease in previously reported activity Earned Amount; 5) Pending items and status thereof, including permits, changes orders, and time extensions; 6) Status of Contract Completion Date and interim milestones; 7) Current and anticipated delays (describe cause of delay and corrective actions(s)); and 8) Description of current and future schedule problem areas. Each entry in the narrative report will cite the respective Activity ID and Activity Description, the date and reason for the change, and description of the change.

c. Earned Value Report: Listing all activities having a budget amount cost loaded. Compilation of total earnings on the project from notice to proceed to current progress payment request. Group and sort activities as directed by the Contracting Officer. Show current budget, previous physical percent complete, to-date physical percent complete, previous earned value, to-date earned value and cost to complete on the report for each activity.

d. Schedule Variance Control (SVC) Diagram: With each schedule submission, provide a SVC diagram showing 1) Cash Flow S-Curves indicating planned project cost based on projected early and late activity finish dates and 2) Earned Value to-date. Revise Cash Flow S-Curves when the contract is modified, or as directed by the Contracting Officer.

1.7 SUBMISSION AND ACCEPTANCE

The Design Baseline NAS shall include detailed design activities, general (summarized) approach for the construction phase(s) of the project and required milestone activities. If the project is being Fast-Tracked or allows Early Start of construction, the Design Baseline Project Schedule shall include all

fast-tracked design construction phases, etc., including the required or proposed critical path design submittals within each phase that shall occur during the duration of the project.

The Contractor shall develop the Construction Baseline Schedule as design progresses, with detailed construction activities. If design must be completed and accepted prior to construction, submit the complete design and construction network analysis schedule and obtain acceptance prior to starting construction work. If the project will be Fast-Tracked, each construction stage shall be detailed and built upon the previous Fast-Tracked Baseline Schedule (including any interim updates) and accepted prior to starting that stage of the construction work. Payment for completed work is dependent on an accepted, detailed schedule for that portion of work.

1.7.1 Monthly Network Analysis Schedule Updates

Contractor and Government representatives shall meet at monthly intervals to review and agree on the information presented in the updated project schedule. The submission of an acceptable, updated schedule to the Government is a condition precedent to the processing of the Contractor's pay request. If a Schedule of Prices is the basis for progress payments, it shall be consistent with the logic and activity breakdowns on the progress schedule. If progress payments are based on a cost-loaded schedule, the Contractor and Government shall agree on percentage of payment for each activity progressed during the update period.

Provide the following with each Schedule submittal:

a. Time Scaled Logic Diagram.

b. Reports listed in paragraph entitled "Required Tabular Reports."

c. Data disks containing the project schedule. Include the back-up native .prx/current mandated schedule program files.

1.7.2 As-Built Schedule

As a condition precedent to the release of retention and making final payment, submit an "As-Built Schedule," as the last schedule update showing all activities at 100 percent completion. This schedule shall reflect the exact manner in which the project was actually constructed.

1.8 CONTRACT MODIFICATION

Submit a Time Impact Analysis with each cost and time proposal for a proposed change. Time Impact Analysis (TIA) shall illustrate the influence of each change or delay on the Contract Completion Date or milestones. No time extensions will be granted nor delay damages paid unless a delay occurs which consumes all available Project Float, and extends the Projected Finish beyond the Contract Completion Date.

a. Each TIA shall be in both narrative and schedule form demonstrating the delay impact. The TIA shall identify the predecessors to the new activities and demonstrate the impacts to successor activities. The Contractor shall run the schedule calculations and submit the impacted schedule with the proposal or claim.

b. The TIA schedule submitted with the proposal shall show all activity progress as of the date of the proposal. If the impact to the schedule occurs prior to the proposal submission, the TIA schedule shall be updated to show all activity progress as of the time of the impact. If the proposed change does not impact the CCD, no TIA shall be required.

c. Submit Data disks containing the TIA schedule. Include the back-up native .prx/current mandated schedule program files.

d. Unless the Contracting Officer requests otherwise, only conformed contract modifications shall be added into the Project NAS.

1.9 FLOAT

Project Float is the length of time between the Contractor's Projected Finish Milestone and the Contract Completion Date Milestone. Project Float available in the schedule, at any time shall not be for the exclusive use of either the Government or the Contractor.

1.10 THREE-WEEK LOOK AHEAD SCHEDULE

The Contractor shall prepare and issue a 3-Week Look Ahead schedule to provide a more detailed day-to-day plan of upcoming work identified on the Project Network Analysis Schedule. The work plans shall be keyed to NAS activity numbers and updated each week to show the planned work for the current and following two-week period. Additionally, include upcoming outages, closures, preparatory meetings, and initial meetings. Identify critical path activities on the Three-Week Look Ahead Schedule. The detail work plans are to be bar chart type schedules, maintained separately from the Project NAS on an electronic spreadsheet program and printed on 8-½ by 11 sheets as directed by the Contracting Officer. Activities shall not exceed 5 working days in duration and have sufficient level of detail to assign crews, tools and equipment required to complete the work. Three hard copies and one electronic file of the 3-Week Look Ahead Schedule shall be delivered to the Contracting Officer no later than 8 a.m. each Monday and reviewed during the weekly CQC Coordination Meeting.

PART 2 PRODUCTS

Not used.

PART 3 EXECUTION

Not used.

-- End of Section --

SECTION 01 33 00.05 20

CONSTRUCTION SUBMITTAL PROCEDURES
05/14

PART 1 GENERAL

1.1 RELATED REQUIREMENTS

This section covers construction submittals that are not included in the design submittals. Submit design submittals in accordance with 01 33 10.05 20 DESIGN SUBMITTAL PROCEDURES. When using Unified Facility Guide Specifications (UFGS) sections that reference Section 01 33 00 SUBMITTAL PROCEDURES, change reference to this section, Section 01 33 00.05 20 CONSTRUCTION SUBMITTAL PROCEDURES.

1.2 SUBMITTAL DESCRIPTIONS (SD)

Submittal requirements are specified in UFGS in Part 2, GENERAL REQUIREMENTS; in references in Part 4 PERFORMANCE TECHNICAL SPECIFICATIONS; and in UFGS in Part 5, PRESCRIPTIVE SPECIFICATIONS. Submittals that are identified by SD numbers use descriptions of items included in submittal packages and titles as follows:

SD-01 Preconstruction Submittals

Certificates of insurance.
Surety bonds.
List of proposed subcontractors.
List of proposed products.
Construction Progress Schedule.
Submittal register.
Schedule of values.
Health and safety plan.
Work plan.
Quality control
Environmental protection plan.

SD-02 Shop Drawings

Drawings, diagrams and schedules specifically prepared to illustrate some portion of the work.

Diagrams and instructions from a manufacturer or fabricator for use in producing the product and as aids to the Contractor for integrating the product or system into the project.

Drawings prepared by or for the Contractor to show how multiple systems and interdisciplinary work will be coordinated.

SD-03 Product Data

Catalog cuts, illustrations, schedules, diagrams, performance charts, instructions and brochures illustrating size, physical appearance and other characteristics of materials or equipment for some portion of the work.

Samples of warranty language when the contract requires extended product warranties.

Manufacturer's data certifying and demonstrating that specific product, process, and/or conditions complies with applicable Guiding Principle GP criteria.

SD-04 Samples

Physical examples of materials, equipment or workmanship that illustrate functional and aesthetic characteristics of a material or product and establish standards by which the work can be judged.

Color samples from the manufacturer's standard line (or custom color samples if specified) to be used in selecting or approving colors for the project.

Field samples and mock-ups constructed on the project site establish standards by which the ensuing work can be judged. Includes assemblies or portions of assemblies which are to be incorporated into the project and those which will be removed at conclusion of the work.

SD-05 Design Data

Calculations, mix designs, analyses or other data pertaining to a part of work.

SD-06 Test Reports

Report signed by authorized official of testing laboratory that a material, product or system identical to the material, product or system to be provided has been tested in accord with specified requirements. (Testing must have been within three years of date of contract award for the project.)

Report which includes findings of a test required to be performed by the Contractor on an actual portion of the work or prototype prepared for the project before shipment to job site.

Report which includes finding of a test made at the job site or on sample taken from the job site, on portion of work during or after installation.

Investigation reports.

Daily checklists.

Final acceptance test and operational test procedure.

SD-07 Certificates

Statements signed by responsible officials of manufacturer of product, system or material attesting that product, system or material meets specification requirements. Must be dated after award of project contract and clearly name the project.

Document required of Contractor, or of a supplier, installer or subcontractor through Contractor, the purpose of which is to further quality of orderly progression of a portion of the work by documenting procedures, acceptability of methods or personnel qualifications.

Confined space entry permits.

SD-08 Manufacturer's Instructions

Preprinted material describing installation of a product, system or material, including special notices and Material Safety Data sheets concerning impedances, hazards and safety precautions.

SD-09 Manufacturer's Field Reports

Documentation of the testing and verification actions taken by manufacturer's representative to confirm compliance with manufacturer's standards or instructions.

Factory test reports.

SD-10 Operation and Maintenance Data

Data that is furnished by the manufacturer, or the system provider, to the equipment operating and maintenance personnel. This data is needed by operating and maintenance personnel for the safe and efficient operation, maintenance and repair of the item.

SD-11 Closeout Submittals

Documentation to record compliance with technical or administrative requirements or to establish an administrative mechanism.

Special requirements necessary to properly close out a construction contract. For example, Record Drawings, As-built drawings, DD Form 1354, Guiding Principles Validation or Sustainability Third Party Certification (TPC), Sustainability Notebook (including all of components) and eOMSI submittals. Also, submittal requirements necessary to properly close out a major phase of construction on a multi-phase contract.

1.3 SUBMITTALS

The use of a "G" following a submittal indicates that an approval action is required, either by the Government or by the Contractor's Designer of Record (DOR) or QC Specialist.

The use of an "S" following a submittal indicates separate but simultaneous submittal is required as part of federally mandated sustainability requirements. Refer to section 01 33 29.05 20 SUSTAINABILITY REQUIREMENTS FOR DESIGN-BUILD for "S" submittal requirements.

Submit the following in accordance with the requirements of this section.

SD-01 Preconstruction Submittals

Submittal Register Format; G
Weekly “W.O.R.M” Report; G
(Form shall be provided by NAVFAC CM)

Utility/Facility Temporary Shut Down Schedule; G
Street Closure Schedule; G

1.3.1 Submittal Register

The submittal register will be prepared during the initial design stages of the project and indicate each design and construction submittal. Maintain an electronic version of the submittal register as work

progresses. The DOR must assist the DQC in preparing the submittal register by determining all project submittals that require DOR approval. The Contractor proposed submittal register format must include all types of information pertinent to the submittal process and be approved by the Contracting Officer prior to the first submission.

1.4 CONSTRUCTION QUALITY CONTROL

1.4.1 Contractor Reviewing, Certifying, Approving Authority

The QC organization is responsible for reviewing and certifying that submittals are in compliance with the contract requirements.

In RFP PART 4 PERFORMANCE TECHNICAL SPECIFICATIONS (PTS), there are UFGS specification sections required to be submitted as part of the design submittal. Unless specified otherwise in this section, the Contractor's DOR is the approving authority for submittals listed in these specifications with a "G" designation, unless the DOR delegates to Contractor Quality Control approval. RFP Part 4 PTS sections also include submittals identified for DOR approval that are not denoted with a "G" designation, these submittals cannot be delegated for Contractor Quality Control approval.

If RFP PART 5 PRESCRIPTIVE SPECIFICATIONS are utilized in this RFP, the Contractor's DOR is the approving authority for submittals listed with a "G" designation, unless the DOR delegates to Contractor Quality Control approval.

DOR shall approve construction submittals that are incorporated in the design submittal prior to being submitted to the Government for design submittal approval. Indicate approval of these construction submittals on the accompanying submittal transmittal forms and the submittal register for each design submittal package. In addition, the DOR professional stamp on the final design submittal indicates approval of construction submittals combined with the design submittal.

Submittal items identified in RFP PARTS 2, 4, and 5 that are not identified with a "G" designation or not designated for DOR approval (in RFP Part 4) are for Contractor Quality Control approval.

Construction submittals that are approved by the DOR or certified by the QC are not required to be submitted to the Government for surveillance, except when the RFP requires the design and construction submittals to be combined in Section 01 33 10.05 20, DESIGN SUBMITTAL PROCEDURES or where specified in the paragraph entitled, SUBMITTALS RESERVED FOR GOVERNMENT SURVEILLANCE of this section.

1.4.2 Submittals Reserved for Government Surveillance

Surveillance submittals are approved by the Contractor in accordance with paragraph CONTRACTOR REVIEWING, CERTIFYING, AND APPROVING AUTHORITY, but provide the Government the opportunity to oversee critical project issues.

If during the Government surveillance of construction submittals, items are brought to the Contractor's attention as non-compliant, the Contractor shall correct the submittal and construction to comply with the requirements of the RFP. Stamp surveillance submittals "APPROVED" by the DOR or QC Specialist and "FOR SURVEILLANCE ONLY." Submit the following Government surveillance submittals, prior to starting work for construction submittal items, and after the completion of the work for reports submittals items.

a. Submit fire protection related submittals pertaining to spray-applied fire proofing and fire stopping, exterior fire alarm reporting systems, interior fire alarm & detection systems, and fire suppression systems including fire pumps and standpipe systems.

b. Submit geotechnical related submittals pertaining to the soils investigations (reports and soils analysis), foundations (shallow and deep), pavements structure design, test pile and production pile testing and installation.

c. Submit conveying related submittals pertaining to elevators, escalators, weight handling equipment, lifts, and conveyors.

d. Submit roofing submittals pertaining to materials and systems used to make up the roof system.

e. Submit HVAC Testing, Adjusting, and Balancing required submittals.

f. Submit telecommunications shop drawings, as described in Part 4, D50 ELECTRICAL, for coordination with the NMCI Contractor.

g. Submit Performance Verification and Acceptance Testing submittals listed in the PTS and referenced UFGS.

h. Submit all Interim Special Inspection Reports on a bi-weekly basis until work requiring special inspections is complete.

i. Submit all Structural Observation Reports and the Final Report of Special Inspections.

j. Submit Final Guiding Principle Validation and TPC sustainability documentation.

k. Submit the exterior enclosure barrier drawings.

l. Submit building enclosure testing results for air tightness and the infrared thermography results if air barrier deficiencies are identified. Actions taken to correct building enclosure deficiencies at each location.

1.4.3 Submittals Reserved for Government Approval

The Government is the approving authority for submittals with a "G" designation in RFP Part 2 GENERAL REQUIREMENTS specification sections. Comply with additional Government approval requirements for Environmental submittals, as specified in RFP Part 2, Section 01 57 19.00 20 TEMPORARY ENVIRONMENTAL CONTROLS FOR DESIGN-BUILD and Section 01 57 19.01 20, SUPPLIMENTARY TEMPORARY ENVIRONMENTAL CONTROLS.

In addition to the Government approvals required by RFP Part 2, GENERAL REQUIREMENTS, the following submittals shall be certified by the QC Manager and the DOR, and approved by the Contracting Officer.

a. Medium Voltage Cable
b. Emergency Generators

1.4.3.1 Scheduling for Government Approved Submittals

Except as specified otherwise, allow review period, beginning when Government receives submittal from the QC organization, of 20 working days for return of submittal to the Contractor. Period of review for submittals with Contracting Officer approval begins when Government receives submittal from QC organization. Period of review for each resubmittal is the same as for initial submittal.

1.4.4 Constraints

a. Submittals shall be complete for each definable feature of work; submit components of definable feature interrelated as a system at the same time.

b. Approval of a separate material, product, or component does not imply approval of assembly in which item functions.

1.4.5 Design Change and Variation

The Contractor must limit change and variation to items that will be advantageous to the Government. Submit proof that the change or variation is needed and provide the same or better level of quality as the design that the Government originally reviewed or approved. Design change is considered prior to Government approval of the final design and variation is considered after Government approval of final design.

1.4.5.1 Design Changes

Design changes must meet the minimum requirements of the solicitation and the accepted proposal. Any changes to the design from what was previously reviewed by the Government during any phase of the design process prior to Government approval of the Final Design must be approved by the DOR and Government before the design change may be incorporated into the design documents. Design changes shall be requested in accordance with Section 01 33 10.05 20 DESIGN SUBMITTAL PROCEDURES.

1.4.5.2 Variations

Variations from contract requirements including the solicitation, the accepted proposal, and the final design, require Government approval. Variations must be approved by the DOR prior to submitting written request to the Government for approval.

a. Considering Variations

Discuss the proposed variation with the Contracting Officer after consulting with the DOR prior to submission to help ensure functional and quality requirements are met and minimize potential rejections and re-submittals. When contemplating a variation which results in lower cost, consider submitting the variation as a Value Engineering Change Proposal (VECP) in accordance with FAR 52.248-3. Specifically point out variations from contract requirements in transmittal letters as applicable. Failure to receive prior Government approval for deviations may result in the Government requiring rejection and removal of such work at no additional cost to the Government.

b. Submitting Variations

When submitting a variation, deliver the written request to the Contracting Officer in the form of a Request for Information (RFI) to include documentation illustrating the nature and features of the variation including any necessary technical submittals and why the variation is desirable and beneficial to Government. Request shall also include any savings to the government and documented approval from the DOR.

The Contracting Officer will indicate an approval or disapproval of the variation request; and if not approved as submitted, shall indicate the Government's reasons therefor. Any work done before such approval is received shall be at the Contractor's risk.

c. Warranting Variations Are Compatible

When proposing a variation for approval, the Contractor, including its Designer(s) of Record, warrants that the contract documents have been reviewed to establish that the variation, if incorporated, will be compatible with the design intent and operational requirements.

1.4.6 Contractor's Responsibilities

Ensure no work has begun until submittals for that work have been "approved" or "approved as noted."

1.4.7 QC Organization Responsibilities

Stamp each sheet of each submittal with QC certifying statement or approving statement, except that data submitted in bound volume or on one sheet printed on two sides may be stamped on the front of the first sheet only.

a. When approving authority is Contracting Officer, QC organization will certify submittals, assure proper signatures, and forward to Contracting Officer with the following certifying statement:

"I hereby certify that the (equipment) (material) (article) shown and marked in this submittal is that proposed to be incorporated with contract Number (insert contract number here), is in compliance with the contract documents, can be installed in the allocated spaces, and is submitted for Government approval.

RFP Part Two Submittals:

Certified by QC Manager _____, Date _____
(QC Manager)

RFP Part Four and Part Five Submittals:

Certified by DOR _____, Date _____

Certified by QC Manager _____, Date _____"

(1) Sign certifying statement or approval statement. The person signing certifying statements shall be QC organization member designated in the approved QC plan. The signatures shall be in original ink. Stamped signatures are not acceptable.

(2) Update submittal register database as submittal actions occur and maintain the submittal register at project site until final acceptance of all work by Contracting Officer.

(3) Retain a copy of approved submittals at project site, including Contractor's copy of approved samples.

b. When the Approving Authority is the Designer of Record, the DOR shall approve, professionally stamp, sign, and date submittals. DOR stamp on construction submittals or submission of design documents that include construction submittals indicates DOR approval for construction. QC organization will certify submittals, assure proper signatures, and forward to Contracting Officer with the following certifying statement:

"I hereby certify that the (equipment) (material) (article) shown and marked in this submittal is that proposed to be incorporated with contract Number (insert contract number here), is in compliance

with the contract requirements, can be installed in the allocated spaces, and is submitted for DOR approval.

RFP Part Four and Part Five Submittals:

Approved by DOR _____, Date _____

Certified by QC Manager _____, Date _____"

(1) Sign certifying statement or approval statement. The person signing certifying statements shall be QC organization member designated in the approved QC plan. The signatures shall be in original ink. Stamped signatures are not acceptable.

(2) Update submittal register database as submittal actions occur and maintain the submittal register at project site until final acceptance of all work by Contracting Officer.

(3) Send copies of final DOR or QC Specialist approved and signed submittals that are identified in this section for Government surveillance to the Contracting Officer. Stamp copies "For Surveillance Only."

1.4.8 Government's Responsibilities

When approving authority is the Contracting Officer, the Government will:

a. Note date on which submittal was received from QC Manager, on each submittal.

b. Review submittals for compliance with contract documents.

1.4.8.1 Government Actions

Submittals will be returned with one of the following notations:

a. Submittals marked "approved" or "approved as submitted" authorize Contractor to proceed with work covered.

b. A submittal marked "not reviewed" will be returned with an explanation of the reason it was not reviewed.

c. Submittals marked "approved as noted" or "approval except as noted; resubmission not required" authorize Contractor to proceed with work as noted provided Contractor takes no exception to the notations.

d. Submittals marked "revise and resubmit" or "disapproved" indicate submittal is incomplete or does not comply with design concept or requirements of the contract documents and shall be resubmitted with appropriate changes. No work shall proceed for this item until resubmittal is approved.

e. Submittals required for surveillance will be returned only if corrective actions are required.

1.5 FORMAT OF SUBMITTALS

1.5.1 Transmittal Form

Transmit submittals with transmittal form prescribed by Contracting Officer and standard for the project.

1.5.1.1 Combined Design and Construction Submittal Notification

Indicate on the design submissions transmittal form, which construction submittals have been combined with the design documents. Coordinate transmittal form list of combined design and construction submittals with submittal register to indicate DOR approval of all combined submittals.

1.5.1.2 Sustainable Design and Construction Submittals

On all projects, provide sustainability submittals in accordance with requirements of this document, specification Section 01 33 29.05 20 SUSTAINABILITY REQUIREMENTS FOR DESIGN-BUILD and FC 1-300-09N, "Navy and Marine Corps Design Procedures". Specific submittal requirements are also identified in technical sections of the specifications. Separate out data demonstrating compliance with construction sustainability requirements and submit separately but concurrently.

1.5.2 Identifying Submittals

When submittals are provided by a Subcontractor, the Prime Contractor is to prepare, review and stamp with Contractor's approval all specified submittals prior to submitting for Government approval.

Identify submittals, except sample installations and sample panels, with the following information permanently adhered to or noted on each separate component of each submittal and noted on transmittal form. Mark each copy of each submittal identically, with the following:

a. Project title and location.

b. Construction contract number.

b. Date of the drawings and revisions.

d. Name, address, and telephone number of subcontractor, supplier, manufacturer and any other subcontractor associated with the submittal.

e. Section number of the specification section by which submittal is required.

f. Submittal description (SD) number of each component of submittal.

g. When a resubmission, add alphabetic suffix on submittal description, for example, submittal 18 would become 18A, to indicate resubmission.

h. Product identification and location in project.

1.6 QUANTITY OF SUBMITTALS

1.6.1 Quantity of Submittals Reserved for Government Approval

Submit four copies of submittals of shop drawings requiring review and approval by Contracting Officer.

1.6.2 Quantity of Submittals Reserved for Government Surveillance

Submit three copies of submittals specified for surveillance to the Contracting Officer. Submit two additional copies of elevator submittals directly to the NAVFAC Elevator Specialist responsible for the NAVFAC elevator certification of the project.

PART 2 PRODUCTS

Not used.

PART 3 EXECUTION

Not used.

-- End of Section --

SECTION 01 33 10.05 20

DESIGN SUBMITTAL PROCEDURES
09/14

PART 1 GENERAL

1.1 SUMMARY

This section includes requirements for Contractor-originated design documents and design submittals.

1.2 REFERENCES

The publications listed below form a part of this specification to the extent referenced. The publications are referred to within the text by the basic designation only. The latest version of the publication at time of award shall be used.

U.S. DEPARTMENT OF DEFENSE (DOD)

UFC 1-200-01	(2013) General Building Requirements
UFC 1-200-02	(2013) High Performance and Sustainable Building Requirements
UFC 1-300-02	(2014) Unified Facilities Guide Specifications (UFGS) Format Standard
UFC 1-300-08	(2009, with Change 2) Criteria for Transfer and Acceptance of DoD Real Property
FC 1-300-09N	(2014) Navy and Marine Corps Design Procedures
UFC 3-600-10N	(2007) Fire Protection Engineering (DRAFT)
UFC 3-800-10N	(2006) Environmental Engineering for Facility Construction(DRAFT)

1.3 UFC 1-200-02

UFC 1-200-01 requires compliance with UFC 1-200-02, "High Performance and Sustainable Building Requirements". UFC 1-200-02 replaces and cancels UFC 4-030-01, Sustainable Development and UFC 3-400-01, Energy Conservation.

1.4 UFC 3-600-10N AND UFC 3-800-10N

UFC 3-600-10N and UFC 3-800-10N are only available on the NAVFAC Design-Build Website under the Design Guidance link: http://www.wbdg.org/ndbm/design_guidance.php. These Draft UFCs are applicable as final documents for Navy projects.

1.5 GENERAL DESIGN REQUIREMENTS

Contractor-originated design documents shall provide a project design that complies with the Request For Proposal (RFP), FC 1-300-09N, UFC 1-200-01, the Core UFCs, and other UFC's listed above.

1.6 SUBMITTALS

Submit design submittals, including shop drawings used as design drawings, to the Government for approval. The use of a "G" following a submittal indicates that a Government approval action is required. Submit the following in accordance with this section and Section 01 33 00.05 20 CONSTRUCTION SUBMITTAL PROCEDURES.

SD-01 Preconstruction Submittals

Consolidated RFP Documents; G

Submittal Register; G

SD-04 Samples

Final framed rendering and copies; G

SD-05 Design Data

Design Drawings; G

Specifications; G

Design Analysis; G

Design Submittals; G

Sustainability Design; G

Historic Preservation and Planning Commission Submission; G

SD-11 Closeout Submittals

Record Documents; G

DD Form 1354; G

1.7 DESIGN QUALITY CONTROL

1.7.1 Contractor Reviewing and Certifying Authority

The QC organization is responsible for reviewing and certifying that design submittals are in compliance with the contract requirements.

1.7.2 Government Approving Authority

The Contracting Officer is the approving authority for design submittals.

1.7.3 Designer of Record Certifying Authority

The Designer of Record (DOR), as registered and defined in FC 1-300-09N, is the design certifying authority. The DOR accepts responsibility for design of work in each respective design discipline, by stamping and approving final construction drawings submitted to the Government approval authority.

1.7.4 Contractor Construction Actions

Upon submission of sealed and signed design documents certified by the DOR, Design Quality Control (DQC) Manager and the Quality Control (QC) Managers, the Contractor may proceed with material and equipment purchases, fabrication and construction of any elements covered by that submittal[, except as specified in the following paragraph].

1.7.4.1 Exception to Contractor Construction Actions

The Government will approve the following final submittals before the Contractor shall be allowed to proceed with construction:

a. Any design submittal that includes or will be impacted by a design change to the contract. Final Government approval of the design change is required before construction can begin on the work included in that design submittal.

1.7.5 Contractor's Responsibilities

a. Designate a lead licensed architect or engineer to be in responsible charge to coordinate the design effort of the entire project. This lead architect or engineer shall coordinate all design segments of the project to assure consistency of design between design disciplines.

b. With the Designer or Record, verify site information provided in the RFP. In addition, provide additional field investigations and verification of existing site conditions as may be required to support the development of design and construction of the project.

c. Indicate on the transmittal form accompanying submittal which design submittals are being submitted as shop drawings.

d. Advise Contracting Officer of variations, as required by paragraph "Variations."

e. Provide an updated, cumulative submittal register with each design package that identifies the design and construction submittals required by that design package and previous submittals.

1.7.6 QC Organization Responsibilities

a. Both the CA and the QC Manager must certify design submittals for compliance with the contract documents. The DOR stamp on drawings indicates approval from the DOR.

b. QC organization shall certify submittals forwarded by the Designer of Record (DOR) to the Contracting Officer with the following certifying statement:

"I hereby certify that the (equipment) (material) (article) shown and marked in this submittal is that proposed to be incorporated with Contract Number (insert contract number here), is in compliance with the contract documents, and is submitted for Government approval.

Certified by Design Quality Control (DQC) Manager
_____, Date _____

Certified by QC Manager_____,
Date _____"

c. Sign certifying statement. The persons signing certifying statements shall be the QC organization members designated in the approved QC plan. The signatures shall be in original ink. Stamped signatures are not acceptable.

d. Update submittal register as submittal actions occur and maintain the submittal register at project site until final approval of all work by Contracting Officer.

e. Retain a copy of approved submittals at project site.

1.7.7 Government Responsibilities

The Government will:

a. Note date on which submittal was received from QC manager, on each submittal.

b. Perform a quality assurance (QA) review of submittals. Government will notify Contractor when comments for that design package are posted and ready for Contractor evaluation and resolution.

c. Upon submittal of final design package and resolution of comments by the Contractor, the Government will sign final design package, when approved, and return electronic copy of signed design documents to the Contractor.

1.7.7.1 Actions Possible

Submittals will be returned with one of the following notations:

a. Submittals may be marked "approved."

b. Submittals marked "not reviewed" will indicate submittal has been previously reviewed and approved, is not required, does not have evidence of being reviewed and certified by Contractor, or is not complete. Submittal will be returned with an explanation of the reason it is not reviewed. Resubmit submittals returned for lack of review by Contractor or for being incomplete, with appropriate action, coordination, or change.

c. Submittals marked "revise and resubmit" or "disapproved" indicate submittal is incomplete or does not comply with design concept or requirements of the contract documents and shall be resubmitted with appropriate changes. If work has been started on the unacceptable portion of the design submittal, the Contractor shall propose corrective action. No further work shall proceed until the issue is resolved in a manner satisfactory to the Government.

1.8 DESIGN DOCUMENTS

Provide design documents that include design analysis, design drawings, and design specifications, reports, and submittal register in accordance with FC 1-300-09N, Submittal Procedures.

The Contractor is required to make product, material, and system selections during the project design and indicate these choices on the design documents. Accomplish this by submitting design drawings and specifications that include proprietary submittal information such as manufacturers name, product names, model numbers, product data, manufactures information, provided optional features, appropriate connections, fabrication, layout, and product specific drawings. Adherence to RFP submittal requirements and provision of DOR approved construction submittal information on the design submittals - eliminates the need for follow-on traditional construction submittals after the final design is approved.

The Contractor is required to submit proprietary information to describe the construction submittal information in the design documents for all products, materials, and systems submittals listed below:

a. All building enclosure components.

b. All roof components.

c. Major mechanical and electrical equipment such as boilers.

Refer to 01 33 00.05 20, CONSTRUCTION SUBMITTAL PROCEDURES for requirements pertaining to Contractor proposed design changes or variations.

1.9 DESIGN DRAWINGS

Prepare, organize, and present design drawings in accordance with the requirements of FC 1-300-09N, Design Procedures.

Submit all CADD files for the final drawings on CD-ROM or DVD disks in AutoCAD 2010 format. Drawing files shall be full files, uncompressed and unzipped.

1.9.1 Design Drawings Used as Shop Drawings

Design drawings may be prepared more like shop drawings to minimize construction submittals after final design is approved. If the Contractor chooses or is required to include the construction submittal information on the design documents, indicate proprietary information on the design drawings as necessary to describe the products, materials, or systems that are to be used on the project. Construction submittal information included directly in the design drawings must be approved by the DOR. All design documents must be professionally signed in accordance with FC 1-300-09N, Design Procedures.

1.9.2 Drawing Format For Design Drawings Used as Shop Drawings

The Contractor-originated drawings will be used as the basis for the record drawings. Shop drawings included as design documents shall comply with the same drawing requirements such as drawing form, sheet size, layering, lettering, and title block used in design drawings.

1.9.3 Identification of Design Drawings Used as Shop Drawings

The Contractor's transmittal letter and submittal register shall indicate which desgn drawings are being submitted as shop drawings.

1.9.4 Naval Facilities (NAVFAC) Engineering Command Drawing Numbers

Number the final Contractor-originated design drawings consecutively with NAVFAC drawing numbers. Determine the total number of sheets required for the complete set of drawings before requesting the NAVFAC drawing numbers from the Contracting Officer.

1.9.5 Seals and Signatures on Documents

All final Contractor-originated design drawings shall be signed, dated, and bear the seal of the registered architect or the registered engineer of the respective discipline in accordance with FC 1-300-09N. This seal shall be the seal of the Designer of Record for that drawing, and who is professionally registered for work in that discipline. A principal or authorized licensed or certified employee shall electronically sign and date final drawings and cover sheet, in accordance with FC 1-300-09N. The design drawing coversheets shall be sealed and signed by the lead licensed architect or engineer of the project design team. Indicate the Contractor's company name and address on the drawing coversheets of each design submittal. Application of the electronic seal and signature accepts responsibility for the work shown thereon.

1.9.6 Units of Measure

Utilize Metric units of measure on the design documents

1.10 SPECIFICATIONS

Provide a Contractor-originated design specification that in conjunction with the drawings, demonstrates compliance with requirements of the RFP. The specified products, materials, systems, and equipment that are approved by the DOR; submitted to the Government by the Contractor; and reviewed by the Contracting Officer shall be used to construct the project. UFGS sections contained in RFP Part 2 shall become a part of the Contractor-originated Division 01 specification without modification. Specification Sections contained in RFP Part 5 shall become a part of the Contractor-originated specification without modification.

1.10.1 Specifications Components and Format

The Contractor shall prepare design specifications that include a UFGS specification for each product, material, or system on the project. If the Contractor chooses or is required above to combine design and construction submittal information on the design documents, provide a UFGS specification and also proprietary information such as catalog cuts and manufacturers data that demonstrates compliance with the RFP. Organize the specifications using Construction Specification Institute (CSI) Masterformat™ unless the Contracting Officer requires a Uniformat organization. Navy's use of system specifications takes precedence over CSI Masterformat component breakdown and related component specifications. Provide project specifications to include the following:

a. Provide the specification cover sheet with the professional seal and signature of the lead licensed architect or engineer of the project design team. Indicate the Contractor's company name and address on the specification coversheet.

b. Table of contents for entire specification.

c. Individual UFGS specification sections for each product, material, and system required by the RFP. Edit UFGS sections in accordance with RFP Part 4, PTS Section Z-10, Design Submittals.

d. If proprietary information is provided or required, include a coversheets for the product, material, or system information that is being proprietarily specified. This information is to follow the related UFGS specification.

e. If proprietary information is provided or required, include highlighted and annotated Catalog Cuts, Manufacturer's Product Data, Tests, Certificates, Manufactures information and letters for each product, material, or system that is being proprietary specified.

f. Coordinated submittal register for all products, materials and systems with each design submittal. Provide a cumulative register that identifies the design and construction submittals required by each design package along with previous design submittals. The DOR shall assist in developing the submittal register by determining which submittal items are required to be approved by the DOR. Complete all fields in the final submittal register in order to obtain Government approval of the final design. Submittal register to include separate but simultaneous delivery and approval of design or data required to fulfill sustainability requirements by Section 01 33 29.05 20 SUSTAINABILITY REQUIREMENTS FOR DESIGN BUILD.

1.10.2 Specifications Section Source Priority

Choose UFGS sections that describe the products, materials, and systems that are used on the project. Use current UFGS sections that are available on the Whole Building Design Guide website (available at this website: http://www.wbdg.org/references/pa_dod.php) and give priority to the Unified Tri-Service UFGS sections (no spec number suffix) and UFGS that are prepared by NAVFAC (.00 20 suffix). Only use a UFGS section prepared by another DoD Component (.00 10, and .00 30 suffix), if an applicable NAVFAC prepared specification section does not exist. Do not use Army (.00 10 suffix)

and NASA (.00 40 suffix) electrical and mechanical specifications. If no applicable UFGS technical specification exists to meet your project requirements, consult with the NAVFAC Component for guidance and create a new UFGS specification in accordance with UFC 1-300-02, Unified Facilities Guide Specifications (UFGS) Format Standard.

1.10.3 Fire Protection Specifications

Specifications pertaining to spray-applied fire proofing and fire stopping, exterior fire alarm reporting systems, interior fire alarm and detection systems, and fire suppression systems, including fire pumps and standpipe systems shall be either prepared by, or reviewed and approved by the Fire Protection DOR.

1.10.4 Identification of Manufacturer's Product Data Used as Specifications.

Provide complete and legible catalog cut sheets, product data, installation instructions, operation and maintenance instructions, warranty, and certifications for products and equipment for which final material and equipment choices have been made. Indicate, by prominent notation, each product that is being submitted including optional manufacturer's features, and indicate where the product data shows compliance with the RFP.

1.10.5 Specification Software

Submit the final specification source files in either MS Word or SpecsIntact.

1.11 DESIGN ANALYSIS

Prepare, organize, and present design analysis in accordance with the requirements of FC 1-300-09N. The design analysis shall be a presentation of facts to demonstrate the concept of the project is fully understood and the design is based on sound engineering principles. Provide design analyses for each discipline and include the following:

a. Basis of design that includes:

(1) An introductory description of the project concepts that addresses the salient points of the design;

(2) An orderly and comprehensive documentation of criteria and rationale for system selection; and

(3) The identification of any necessary licenses and permits that are anticipated to be required as a part of the design and/or construction process. The "Permits Record of Decision" (PROD) form provided shall be used for recording permits.

b. Code and criteria search shall identify all applicable codes and criteria and highlight specific requirements within these codes and criteria for critical issues in the facility design.

c. Calculations as specified and as needed to support this design.

d. Analysis and calculations relative to sustainable design requirements. Refer to Section 01 33 29.05 20, SUSTAINABILITY REQUIREMENTS FOR DESIGN-BUILD and FC 1-300-09N for requirements.

e. Provide an exterior enclosure vapor pressure analysis, hygrothermal analysis, and written/graphic descriptions for each unique wall and roof assembly used as part of exterior enclosure barriers.

f. Section titled "Antiterrorism" that documents the antiterrorism features

g. Fall Protection Analysis

h. Draft and Interim DD Form 1354 that document the real property assets of the project. Refer to Record Documents paragraphs in this section for requirements.

1.11.1 Basis of Design Format

The basis of design for each design discipline shall include a cover page indicating the project title and locations, contract number, table of contents, tabbed separations for quick reference, and bound in separate volumes for each design discipline.

1.11.2 Design Calculations

Place the signature and seal of the designer responsible for the work on the cover page of the calculations for the respective design discipline.

1.11.3 Historic Preservation and Planning Commission Submission

Prepare the presentation materials required to obtain approval from the Historic Preservation and Planning Commissions having jurisdiction over the site location. The submission of the materials to the agencies will be accomplished by the Government. Consult with the NAVFAC Region Historic Preservation Officer and prepare a submittal in accordance with the 36 CFR 800.11, DOCUMENT STANDARDS. The Contractor is responsible for preparing the submittal package, presenting the project in public meeting, if called upon by the Government; and to modify the submittal and contract documents to incorporate the comments of the agencies having jurisdiction to obtain project approval.

1.11.4 Fall Protection Analysis

Eliminate fall hazards in the facility or if not feasible provide control measures to protect personnel conducting maintenance work after completion of the project. Identify fall hazards in the Basis of Design with the Design Development and Prefinal submittals. The analysis shall describe how fall hazards are considered, eliminated, prevented or controlled to prevent maintenance personnel from exposure to fall hazards while performing work at heights. Refer to RFP Part 2, Section 01 35 26.05 20, GOVERNMENT SAFETY REQUIREMENTS FOR DESIGN-BUILD for fall hazard protection requirements.

1.14 RECORD DOCUMENTS

1.14.1 Record Drawings

The as-built modifications shall be accomplished by electronic drafting methods on the Contractor-originated .DWG design drawings to create a complete set of record drawings.

a. For each record drawing, provide CADD drawing identical to signed Contractor-originated.PDF drawings, that incorporates modifications to the as-built conditions. In addition, copy initials and dates from the Contracting Officer approved .PDF documents to the title block of the record CADD.DWG drawings. The RFP reference or definitive drawings are not required for inclusion in the record set of drawings.

b. After all as-built conditions are recorded on the CADD.DWG files, produce a PDF file of each individual record drawing in conformance with FC 1-300-09N. Electronic signatures are not required on record drawings.

1.14.2 Source Documents

Provide the specifications, design analysis, reports, surveys, calculations, and any other contracted documents on the CD-ROM or DVD disk with the record drawings.

1.14.3 DD Form 1354

Prepare a Draft and Interim DD Form 1354, TRANSFER AND ACCEPTANCE OF MILITARY REAL PROPERTY, in accordance with UFC 1-300-08. All assets must be broken out by construction categories that are found in the DD Form 1391 and the "Category Codes for Military Real Property" from NAVFAC P-72. Use Navy specific Facility Catcodes from the NAVFAC P-72, which are available from the Contracting Officer. Coordinate the identification of appropriate asset construction categories with the Contracting Officer and the Real Property Accounting Officer.

a. Draft DD Form 1354. DOR shall determine applicable real property assets broken out by construction categories and submit a "Draft DD Form 1354" for Government approval as a part of the Design Analysis included with the Prefinal Design submittal. "Draft DD Form 1354" must include all quantities and units of measure, but does not require cost breakdown. Download the current blank editable DD Form 1354 in ADOBE (PDF) from the following website: http://www.dtic.mil/whs/directives/infomgt/forms/eforms/dd1354.pdf

b. Interim DD Form 1354. Contractor shall coordinate with the DOR and update the Draft DD Form 1354 submission to include any additional assets, improvements, or alterations that occurred during construction. Use the Draft DD Form 1354 and the Section 01 20 00.05 20, PRICE AND PAYMENT PROCEDURES to identify costs. Submit Interim DD Form 1354 to the Government for approval 60 days prior to the Beneficial Occupancy Date (BOD). If modifications to the Interim DD Form 1354 are required by the Government, the corrected version must be submitted prior to the BOD.

Submit the completed Checklist for Form DD1354 of Government-Furnished and Contractor-Furnished/Contractor Installed items. Attach this list to the Interim DD Form 1354. Instructions for completing the form and a blank checklist may be obtained from UFC 1-300-08.

Coordinate with Section 01 20 00.05 20, PRICE AND PAYMENT PROCEDURES for construction categories and associated category codes. The Contractor's Schedule of Prices shall allocate the total cost of construction to the appropriate category codes.

When documenting demolition work, the DD Form 1354 shall list the quantitative data associated with this work as a negative value to show the cost should be deleted from the Navy asset data store. Coordinate with the Installation Real Property POC to assist in determining the negative value for demolition work.

PART 2 PRODUCTS

2.1 CONSOLIDATED RFP DOCUMENTS

Within four weeks after contract award, provide three electronic and hard copies of consolidated RFP documents incorporating the Contractor's Proposal and all RFP amendments and revisions that are contained in the contract award. Identify the changes to the RFP with the "Red-lining" or "Track Changes" feature of SpecsIntact or MS Word to highlight the pre-award modifications to the contract. Identify the amendment source at each addition and deletion by annotation, such as footnote or reference in parenthesis.

2.2 DESIGN SUBMITTALS

Complete the Contractor-originated design submittals as defined by this contract, and coordinate with the approved design network analysis schedule.

2.2.1 Design Submittal Packages

The Government prefers to review for Quality Assurance (QA) as few submittal packages as possible. Site and Building Design Submittal Packages are required, however Critical Path Design Submittals are acceptable if they are substantiated as having an impact to the critical path in the Government approved Network Analysis Schedule. A Critical Path submittal shall include all design analyses, drawings, specifications and product data required to fully describe the project element for Government review.

Examples of project elements that may be submitted as Critical Path Design Submittal Packages are: Master Plan Design, Demolition Design, Foundation Design, Structural Design, Building Enclosure Design, Remaining Work Design, Furniture/Equipment Design, long lead items, or any other construction activity or project element that can be organized into a submittal package that can be reviewed and approved by the Government without being contingent upon subsequent design submittals.

2.2.1.1 Site Design

The Site Design typically includes the following components:

a. Master Site Plan

b. Demolition

c. Site work including Environmental

d. Geotechnical

2.2.1.2 Building Design

The Building Design typically includes the following components:

a. Foundation

b. Structural

c. Building Enclosures

d. Remaining Work

e. Furniture/Equipment

2.2.2 Required Design Submittals

Provide the following Design Submittal packages. Provide comprehensive, multi-discipline design packages that include design documentation for project elements, fully developed to the design stage indicated, and in accordance with FC 1-300-09N, except where specified otherwise.

a. Concept Design (15%) – Government Progress QA. 21 calendar day review time.

b. Design Development (50%) - Government Progress QA. 21 calendar day Government review time.

c. Prefinal (100 %) Design - Government Progress QA. 21 calendar day Government review time.

d. Final Design - Government QA. 21 calendar day Government review time for submittals requiring Government approval prior to construction.

2.2.3 Critical Path Design Submittals

Provide Critical Path Design Submittals that include design documents for the project elements involved. Include and provide full documentation that would normally have been provided in earlier submittal stages, such as Design Development Phase.

2.2.4 Review Copies of Design Submittal Packages

a. Provide bound copies of each design submittal package for review to the following reviewers. Addresses for mailing will be furnished at the PAK meeting.

(1) 3 paper copies to the NAVFAC component and 1 electronic copy of the Final submittals.

(2) 1 paper copy to the Activity claimant.

(3) 1 half sized drawing set to the FEAD.

b. Provide the same quantities of copies for resubmittals, as required for each design submittal.

2.2.5 Design Submittal Review Schedule

Use the time frames for Government submittal review identified in the RFP. For construction scheduling purposes add additional time to the identified minimum review time periods to allow for the following scheduling conditions:

1. Submittals received after noon will be logged in on the following business day.

2. Federal holidays, including the period between Christmas and New Years Day, will be considered non-working days for Government personnel in reviewing design submittals and attending design related meetings.

3. Postpone delivery if Government personnel to receive the submittal are unavailable. Assure in advance of the submittal delivery it can be received.

4. Postpone delivery when heightened security restricts access to the Base. Coordinate heightened security requirements in advance with the CM.

5. Period of review for a resubmittal is the same as the initial submittal. Review time for resubmittals caused by non-conformance, do not result in a change in contract duration or cost.

2.2.6 Distribution of Approved Final Design Drawings and Specification to Government Representatives

Submit within 14 calendar days of receiving the Government Approved Final Design Documents, which includes any Critical Path Final Design Document Packages, electronic and hardcopy(s) of these final documents to Government representatives for use during the construction of the project. If Critical Path Submittal Packages are used, provide coversheets and index to identify each sheet and how this Critical Path Submittal Package fits into the overall project. Provide the number and type of copies of the final design documents to the following Government representative:

a. Two electronic and two hard copy(s) to the Project Manager (name, address, and phone number)

2.3 IDENTIFICATION OF DESIGN SUBMITTALS

Provide a title sheet to clearly identify each submittal, the completion status, and the date. The title sheet shall use the standard format indicated in the FC 1-300-09N for title sheets. The title sheet shall be unique to a particular design submittal. Submit the project title sheet with design status and date for the design submittals.

2.3.1 Critical Path Submittal Title Sheet

Identify Critical Path submittals as such and include a title sheet indicating the type of critical path submittal, the level of completion of the individual drawings, and which drawings are approved for construction.

PART 3 EXECUTION

3.1 CONTRACTOR'S RESOLUTION OF COMMENTS

Provide written responses to all written comments by the Government. Resubmittal of an unacceptable design submittal shall be a complete package that includes all the required, specified components of that design submittal. When required by the Government, Contractor resubmittal of design package, due to nonconformance to the contract, is not a delay in the contract.

3.2 DESIGN CHANGE AND VARIATIONS

A design change is when the design is revised from what was reviewed by the Government during any phase of the design process prior to Government approval of the Final Design. A variation is any portion of the design that differs from the requirements of the solicitation, accepted proposal, or final design after Government approval of the Final Design. Design changes and variations require Government approval and only variations that are advantageous to the Government will be considered. Refer to Section 01 33 00.05 20, CONSTRUCTION SUBMITTAL PROCEDURES for further explanation and requirements of design change and variation.

The Contractor shall immediately notify the Government of all potential design changes and variations via a Request for Information (RFI) to the Contracting Officer. Design changes or variations that the Contractor asserts will require a contract modification to adjust the cost/price or schedule shall not be incorporated in the design during any phase of the design process without prior documented approval from the Contracting Officer. Contractors will not receive compensation for any unauthorized design changes or variations which have been included in the Government approved Final Design. Include the following information in the design change and variation RFIs:

a. Indicate the RFP Parts, sections, and paragraphs affected by this design change or variation,

b. The scope of work of the design change or variation,

c. The reason for the proposed change,

d. Explanations of how the variation is advantageous to the Government.

d. Indicate which upcoming design submittal will be affected by the subject design change,

e. Explanation of contract cost/price and schedule impacts or provide an affirmative statement indicating that the design change or variation will not have an impact on the contract cost/price or schedule.

f. Coordination measures proposed to incorporate the design change or variation into the construction.

g. Upon request by the Contracting Officer, submit a cost proposal prepared using the Uniformat Work Breakdown Structure for all design changes and variations that have cost or schedule impacts. Submit a proposal that provides cost breakdown of each Uniformat system or subsystem that is applicable to the design change or variation. Utilize the units of measure indicated in the Uniformat Structure at the NAVFAC DB RFP website, http://www.wbdg.org/ndbm/uniformat.php.

3.3 THE CONTRACT AND ORDER OF PRECEDENCE

3.3.1 Contract Components

The contract consists of the solicitation, the approved proposal, and the final design.

3.3.2 Order of Precedence

NFAS Clause 5252.236-9312. In the event of conflict or inconsistency between any of the below described portions of the conformed contract, precedence shall be given in the following order:

a. Any portions of the proposal or final design that exceed the requirements of the solicitation.

(1) Any portion of the proposal that exceeds the final design.

(2) Any portion of the final design that exceeds the proposal.

(3) Where portions within either the proposal or the final design conflict, the portion that most exceeds the requirements of the solicitation has precedence.

b. The requirements of the solicitation, in descending order of precedence:

(1) Standard Form 1442, Price Schedule, and Davis Bacon Wage Rates.

(2) Part 1 - Contract Clauses.

(3) Part 2 - General Requirements.

(4) Part 3 - Project Program Requirements.

(5) Part 6 - Attachments (excluding Concept Drawings).

(6) Part 5 - Prescriptive Specifications exclusive of performance specifications.

(7) Part 4 - Performance Specifications exclusive of prescriptive specifications.

(8) Part 6 - Attachments (Concept Drawings).

3.3.2.1 Government Review or Approval

Government review or approval of any portion of the proposal or final design shall not relieve the Contractor from responsibility for errors or omissions with respect thereto.

-- End of Section --

SECTION 01 35 26.05 20

GOVERNMENT SAFETY REQUIREMENTS FOR DESIGN-BUILD
04/13

PART 1 GENERAL

1.1 REFERENCES

The publications listed below form a part of this specification to the extent referenced. The publications are referred to within the text by the basic designation only.

AMERICAN NATIONAL STANDARDS INSTITUTE (ANSI)

ANSI/HFES 100	(2007) Human Factors Engineering of Computer Workstations

AMERICAN SOCIETY OF SAFETY ENGINEERS (ASSE/SAFE)

ASSE/SAFE A10.32	(2012) Fall Protection
ASSE/SAFE A10.34	(2001; R 2012) Protection of the Public on or Adjacent to Construction Sites
ASSE/SAFE Z359.0	(2007) Definitions and Nomenclature Used for Fall Protection and Fall Arrest
ASSE/SAFE A1264.1	(2007) Safety Requirements for Workplace Walking/Working Surfaces and Their Access; Workplace, Floor, Wall and Roof Openings; Stairs and Guardrails Systems
ASSE/SAFE Z359.1	(2007) Safety Requirements for Personal Fall Arrest Systems, Subsystems and Components
ASSE/SAFE Z359.2	(2007) Minimum Requirements for a Comprehensive Managed Fall Protection Program
ASSE/SAFE Z359.3	(2007) Safety Requirements for Positioning and Travel Restraint Systems
ASSE/SAFE Z359.4	(2007) Safety Requirements for Assisted-Rescue and Self-Rescue Systems, Subsystems and Components

ASME INTERNATIONAL (ASME)

ASME B30.22	(2010) Articulating Boom Cranes
ASME B30.3	(2012) Tower Cranes
ASME B30.5	(2011) Mobile and Locomotive Cranes
ASME B30.8	(2010) Floating Cranes and Floating Derricks

ASTM INTERNATIONAL (ASTM)

ASTM F855	(2009) Standard Specifications for Temporary Protective Grounds to Be Used on De-energized Electric Power Lines and Equipment

DEPARTMENT OF DEFENSE (DoD)

DoD-HDBK 743	(1991, Rev A) Anthropometry of US Military Personnel (Metric)
MIL-STD-1472	(2012, Rev G) Human Engineering

INSTITUTE OF ELECTRICAL AND ELECTRONICS ENGINEERS (IEEE)

IEEE 1048	(2003) Guide for Protective Grounding of Power Lines

NATIONAL FIRE PROTECTION ASSOCIATION (NFPA)

NFPA 1	(2012; TIA 11-1) Fire Code
NFPA 10	(2013) Standard for Portable Fire Extinguishers
NFPA 241	(2013) Standard for Safeguarding Construction,Alteration, and Demolition Operations
NFPA 306	(2014) Standard for Control of Gas Hazards on Vessels
NFPA 51B	(2014) Standard for Fire Prevention During Welding, Cutting, and Other Hot Work
NFPA 70	(2014; AMD 1 2013; Errata 1 2013; AMD 2 2013; Errata 2 2013) National Electrical Code
NFPA 70E	(2012; Errata 2012) Standard for Electrical Safety in the Workplace

U.S. ARMY CORPS OF ENGINEERS (USACE)

EM 385-1-1	(2008; Errata 1-2010; Changes 1-3 2010; Changes 4-6 2011; Change 7 2012) Safety and Health Requirements Manual

U.S. NATIONAL ARCHIVES AND RECORDS ADMINISTRATION (NARA)

10 CFR 20	Standards for Protection Against Radiation
29 CFR 1910	Occupational Safety and Health Standards
29 CFR 1910.146	Permit-required Confined Spaces
29 CFR 1910.147	Control of Hazardous Energy (Lock Out/Tag Out)
29 CFR 1915	Confined and Enclosed Spaces and Other Dangerous Atmospheres in Shipyard Employment

29 CFR 1919	Gear Certification
29 CFR 1926	Safety and Health Regulations for Construction
29 CFR 1926.1400	Cranes & Derricks in Construction
29 CFR 1926.16	Rules of Construction
29 CFR 1926.21	Safety Training and Education
29 CFR 1926.450	Scaffolds
29 CFR 1926.500	Fall Protection
CPL 2.100	(1995) Application of the Permit-Required Confined Spaces (PRCS) Standards, 29 CFR 1910.146

U.S. NAVAL FACILITIES ENGINEERING COMMAND (NAVFAC)

NAVFAC P-307	(2009; Change 1 Mar 2011; Change 2 Aug 2011)Management of Weight Handling Equipment

1.2 SUBMITTALS

The use of a "G" following a submittal indicates that a Government approval action is required. Submit the following in accordance with Section 01 33 10.05 20 DESIGN SUBMITTAL PROCEDURES and Section 01 33 00.05 20 CONSTRUCTION SUBMITTAL PROCEDURES.

SD-01 Preconstruction Submittals

Accident Prevention Plan; G

Activity Hazard Analysis (AHA); G

Crane Critical Lift Plan; G

Proof of Qualifications for Crane Operators; G

SD-06 Test Reports

Accident Notifications

Submit reports as their incidence occurs, in accordance with the requirements of the paragraph entitled, "Accident Notifications."

Accident Reports

Submit reports as their incidence occurs, in accordance with the requirements of the paragraph entitled, "Accident Reports."

Crane Reports

Monthly Exposure Report

SD-07 Certificates

Confined Space Entry Permit

Hot Work Permit

License Certificates

Contractor Safety Self-Evaluation Checklist; G (Obtain copy from Contracting Officer)

Submit one copy of each permit/certificate attached to each Daily Production Report.

1.3 DEFINITIONS

a. Competent Person for Fall Protection. A person who is capable of identifying hazardous or dangerous conditions in the personal fall arrest system or any component thereof, as well as their application and use with related equipment, and has the authority to take prompt corrective measures to eliminate the hazards of falling.

b. High Visibility Accident. Any mishap which may generate publicity and/or high visibility.

c. Medical Treatment. Treatment administered by a physician or by registered professional personnel under the standing orders of a physician. Medical treatment does not include first aid treatment even through provided by a physician or registered personnel.

d. Operating Envelope. The area surrounding any crane. Inside this "envelope" is the crane, the operator, riggers and crane walkers, rigging gear between the hook and the load, the load and the crane's supporting structure (ground, rail, etc.).

e. Recordable Injuries or Illnesses. Any work-related injury or illness that results in:

(1) Death, regardless of the time between the injury and death, or the length of the illness;

(2) Days away from work (any time lost after day of injury/illness onset);

(3) Restricted work;

(4) Transfer to another job;

(5) Medical treatment beyond first aid;

(6) Loss of consciousness; or

(7) A significant injury or illness diagnosed by a physician or other licensed health care professional, even if it did not result in (1) through (6) above.

f. "USACE" property and equipment specified in EM 385-1-1 should be interpreted as Government property and equipment.

g. Weight Handling Equipment (WHE) Accident. A WHE accident occurs when any one or more of the six, eight elements in the operating envelope fails to perform correctly during operation, including operation during maintenance or testing resulting in personnel injury or death; material or equipment damage; dropped load; derailment; two-blocking; overload; and/or collision, including unplanned contact between the load, crane, and/or other objects. A dropped load, derailment, two-blocking, overload and collision are considered accidents even though no

material damage or injury occurs. A component failure (e.g., motor burnout, gear tooth failure, bearing failure) is not considered an accident solely due to material or equipment damage unless the component failure results in damage to other components (e.g., dropped boom, dropped load, roll over, etc.) Any mishap meeting the criteria described above shall be documented in both the Contractor Significant Incident Report (CSIR) and using the NAVFAC prescribed Navy Crane Center (NCC) form submitted within five days both as provided by the Contracting Officer. Comply with additional requirements and procedures for accidents in accordance with NAVFAC P-307, Section 12.

1.4 CONTRACTOR SAFETY SELF-EVALUATION CHECKLIST

Contracting Officer will provide a "Contractor Safety Self-Evaluation checklist" to the Contractor at the pre-construction conference. Complete the checklist monthly and submit with each request for payment voucher. An acceptable score of 90 or greater is required. Failure to submit the completed safety self-evaluation checklist or achieve a score of at least 90 may result in retention of up to 10 percent of the voucher. Additionally, provide a Monthly Exposure Report and attach to the monthly billing request. This report is a compilation of employee-hours worked each month for all site workers, both prime and subcontractor. Failure to submit the report may result in retention of up to 10 percent of the voucher. The Contracting Officer will submit a copy of the Contractor Safety Self-Evaluation and Monthly Exposure Report to the local safety and occupational health office.

1.5 REGULATORY REQUIREMENTS

In addition to the detailed requirements included in the provisions of this contract, work performed shall comply with EM 385-1-1, and the following federal, state, and local laws, ordinances, criteria, rules and regulations. Submit matters of interpretation of standards to the appropriate administrative agency for resolution before starting work. Where the requirements of this specification, applicable laws, criteria, ordinances, regulations, and referenced documents vary, the most stringent requirements shall apply.

1.6 SITE QUALIFICATIONS, DUTIES, PLAN, AND MEETINGS

1.6.1 Personnel Qualifications and Training Requirements

1.6.1.1 Site Safety and Health Officer (SSHO)

The SSHO must meet the requirements of EM 385-1-1 section 1 and ensure that the requirements of 29 CFR 1926.16 are met for the project. The Contractor shall provide a Safety oversight team that includes a minimum of one (1) person at each project site to function as the Safety and Health Officer (SSHO). The SSHO or an equally-qualified Designated Representative/alternate shall be at the work site at all times to implement and administer the Contractor's safety program and government-accepted Accident Prevention Plan. The SSHO's training, experience, and qualifications shall be as required by EM 385-1-1 paragraph 01.A.17, entitled SITE SAFETY AND HEALTH OFFICER (SSHO), and all associated sub-paragraphs.

A Competent Person shall be provided for all of the hazards identified in the Contractor's Safety and Health Program in accordance with the accepted Accident Prevention Plan, and shall be on-site at all times when the work that presents the hazards associated with their professional expertise is being performed. Provide the credentials of the Competent Persons(s) to the Contracting Officer for acceptance in consultation with the Safety Office.

The Contractor Quality Control Person can be the SSHO on this project.

1.6.1.2 Crane Operators

Meet the crane operator's requirements in EM 385-1-1. In addition, for mobile cranes with Original Equipment Manufacturer (OEM) rated capacitates of 50,000 pounds or greater, designate crane operators as qualified by a source that qualifies crane operators (i.e., union, a government agency, or an organization that tests and qualifies crane operators). Provide proof of current qualification. In addition, the Contractor shall comply with Contractor Operated Crane Requirements included in the latest revision of document NAVFAC P-307 Section 1.7.2 "Contractor Operated Cranes," and Appendix P, Figure P-1 and with 29 CFR 1926, Subpart CC.

1.6.1.3 Competent Person for Confined Space Entry

Provide a competent person for confined space meeting the definition and requirements of EM 385-1-1. If work involves marine operations that handle combustible or hazardous materials, this person shall have the ability to understand and follow through on the air sampling, PPE, and instructions of a Marine Chemist, Coast Guard authorized persons, or Certified Industrial Hygienist. All confined and enclosed space work shall comply with NFPA 306, 29 CFR 1915, Subpart B, "Confined and Enclosed Spaces and Other Dangerous Atmospheres in Shipyard Employment" or as applicable, 29 CFR 1910.147 for general industry.

1.6.2 Personnel Duties

1.6.2.1 Site Safety and Health Officer (SSHO)

Collect and maintain certified EMR ratings and DART rates for all subcontractors on the project and make them available to the Government at the Government's request.

In addition to duties required in EM 385-1-1, perform the following duties:

a. Conduct daily safety and health inspections and maintain a written log which includes area/operation inspected, date of inspection, identified hazards, recommended corrective actions, estimated and actual dates of corrections. Attach safety inspection logs to the Contractors' daily production report.

b. Conduct mishap investigations and complete required reports. Maintain the OSHA Form 300 and Daily Production reports for prime and sub-contractors.

c. Maintain safety-related references applicable to the project, including those listed in the article "References." Maintain applicable equipment manufacturer's manuals.

d. Attend the pre-construction conference, pre-work meetings including preparatory inspection meeting, and periodic in-progress meetings.

e. Implement and enforce accepted APPS and AHAs.

f. Maintain a safety and health deficiency tracking system that monitors outstanding deficiencies until resolution. Post a list of unresolved safety and health deficiencies on the safety bulletin board.

g. Ensure sub-contractor compliance with safety and health requirements. Failure to perform the above duties will result in dismissal of the superintendent, QC Manager, and/or SSHO, and a project work stoppage. The project work stoppage will remain in effect pending approval of a suitable replacement.

h. Maintain a list of hazardous chemicals on site and their material safety data sheets.

i. Within one calendar day after commencement of work, erect a safety bulletin board at the job site. Where size, duration, or logistics of project do not facilitate a bulletin board, an alternative method, acceptable to the Contracting Officer, that is accessible and includes all mandatory information for employee and visitor review, shall be deemed as meeting the requirement for a bulletin board. Include and maintain information on safety bulletin board as required by EM 385-1-1, section 01.A.06.

1.6.3 Safety Plans and Submissions

1.6.3.1 Accident Prevention Plan - Pre-Design Submittal

Provide a site-specific Accident Prevention Plan (APP) including Activity Hazard Analyses (AHA) in accordance with the US Army Corps of Engineers Safety and Health Manual EM 385-1-1 Appendix A, Sections 10 & 11 for the design team to follow during site visits and investigations. For subsequent visits, update the form if there are changes in the personnel who shall be attending, and/or the tasks to be performed. Submit the APP for review and acceptance by the Government at least 15 calendar days prior to the start of the design field work. Field work may not begin until the pre-design APP is accepted by the Contracting Officer.

If the design scope includes borings or other subsurface investigations, as part of the APP identify the type of field investigation and verification techniques, such as visual, Miss Utilities scanning and third party/subcontractor scanning, potholing, and/or hand digging within two feet of a known utility. Mark underground utilities before starting any ground-disturbing actions. Notify the contracting officer 15 days prior to the start of soil borings or sub-surface investigations.

Prior to the start of construction incorporate the Pre-Design APP into the Pre-Construction APP so that one site specific APP exists for the project and submit to the Contracting Officer for acceptance

1.6.3.2 Accident Prevention Plan - Pre-Construction Submittal

Use a qualified person to prepare the written site-specific APP. Prepare the APP in accordance with the format and requirements of EM 385-1-1 and as supplemented herein. Cover all paragraph and subparagraph elements in EM 385-1-1, Appendix A, "Minimum Basic Outline for Accident Prevention Plan". Specific requirements for some of the APP elements are described below. The APP shall be job-specific and address any unusual or unique aspects of the project or activity for which it is written. The APP shall interface with the Contractor's overall safety and health program. Include any portions of the Contractor's overall safety and health program referenced in the APP in the applicable APP element and made site-specific. The Government considers the Prime Contractor to be the "controlling authority" for all work site safety and health of the subcontractors. Contractors are responsible for informing their subcontractors of the safety provisions under the terms of the contract and the penalties for noncompliance, coordinating the work to prevent one craft from interfering with or creating hazardous working conditions for other crafts, and inspecting subcontractor operations to ensure that accident prevention responsibilities are being carried out. The APP shall be signed by the person and firm (senior person) preparing the APP, the Contractor, the on-site superintendent, the designated site safety and health officer, the Contractor Quality control Manager, and any designated CSP and/or CIH.

Submit the APP to the Contracting Officer 15 calendar days prior to the date of the Prework conference for acceptance. Work cannot proceed without an accepted APP. Once accepted by the Contracting Officer, the APP and attachments will be enforced as part of the contract. Disregarding the provisions of this contract or the accepted APP will be cause for stopping of work, at the discretion of the Contracting Officer, until the matter has been rectified.

Once work begins, changes to the accepted APP shall be made with the knowledge and concurrence of the Contracting Officer, project superintendent, SSHO and quality control manager. Should any

severe hazard exposure, i.e. imminent danger, become evident, stop work in the area, secure the area, and develop a plan to remove the exposure and control the hazard. Notify the Contracting Officer within 24 hours of discovery. Eliminate/remove the hazard. In the interim, take all necessary action to restore and maintain safe working conditions in order to safeguard onsite personnel, visitors, the public (as defined by ASSE/SAFE A10.34,) and the environment.

Copies of the accepted plan will be maintained at the Contracting Officer's office and at the job site. Continuously review and amend the APP, as necessary, throughout the life of the contract. Incorporate unusual or high-hazard activities not identified in the original APP as they are discovered.

In addition to the requirements outlined in EM 385-1-1, the following is required:

a. Names and qualifications (resumes including education, training, experience and certifications) of all site safety and health personnel designated to perform work on this project to include the designated site safety and health officer and other competent and qualified personnel to be used such as CSPs, CIHs, STSs, CHSTs. Specify the duties of each position.

b. Qualifications of competent and of qualified persons. As a minimum, designate and submit qualifications of competent persons for each of the following major areas: excavation; scaffolding; fall protection; hazardous energy; confined space; health hazard recognition, evaluation and control of chemical, physical and biological agents; personal protective equipment and clothing to include selection, use and maintenance.

c. Confined Space Entry Plan. Develop a confined and/or enclosed space entry plan in accordance with EM 385-1-1, applicable OSHA standards 29 CFR 1910, 29 CFR 1915, and 29 CFR 1926, CPL 2.100, and any other federal, state and local regulatory requirements identified in this contract. Identify the qualified person's name and qualifications, training, and experience. Delineate the qualified person's authority to direct work stoppage in the event of hazardous conditions. Include procedure for rescue by contractor personnel and the coordination with emergency responders. (If there is no confined space work, include a statement that no confined space work exists and none will be created.)

d. Fall Protection and Prevention (FP&P) Program Documentation. The program documentation shall be site specific and address all fall hazards in the work place and during different phases of construction. Address how to protect and prevent workers from falling to lower levels when they are exposed to fall hazards above 1.8 m (6 feet). A qualified person for fall protection shall prepare and sign the program documentation. Include fall protection and prevention systems, equipment and methods employed for every phase of work, responsibilities, assisted rescue, self-rescue and evacuation procedures, training requirements, and monitoring methods. Revise the Fall Protection and Prevention Program documentation every six months for lengthy projects, reflecting any changes during the course of construction due to changes in personnel, equipment, systems or work habits. Keep and maintain the accepted Fall Protection and Prevention Program documentation at the job site for the duration of the project. Include the Fall Protection and Prevention Program documentation in the Accident Prevention Plan.

   The FP&P Plan shall include a Rescue and Evacuation Plan in accordance with EM 385-1-1, Section 21.M. The plan shall include a detailed discussion of the following: methods of rescue; methods of self-rescue; equipment used; training requirement; specialized training for the rescuers; procedures for requesting rescue and medical assistance; and transportation routes to a medical facility. Include the Rescue and Evacuation Plan in the Fall Protection and Prevention (FP&P) Plan, and as part of the Accident Prevention Plan (APP).

e. Weight Handling Equipment Certificate of Compliance. Provide a Certificate of Compliance for each crane when entering an activity under this contract (see Contracting Officer for a blank certificate). State within the certificate that the crane and rigging gear meet applicable OSHA

regulations (with the Contractor citing which OSHA regulations are applicable, e.g., cranes used in construction demolition, or maintenance comply with 29 CFR 1926 and EM 385-1-1. Certify on the Certificate of Compliance that the crane operator(s) is qualified and trained in the operation of the crane to be used. For cranes at DOD activities in foreign countries, certify that the crane and rigging gear conform to the appropriate host country safety standards. Also certify that all of its crane operators working on the DOD activity have been trained in the proper use of all safety devices (e.g., anti-two block devices). Post certifications on the crane.

f. Crane Critical Lift Plan. Prepare and sign weight handling critical lift plans for lifts over 75 percent of the capacity of the crane or hoist (or lifts over 50 percent of the capacity of a barge mounted mobile crane's hoists) at any radius of lift; lifts involving more than one crane or hoist; lifts of personnel; and lifts involving non-routine rigging or operation, sensitive equipment, or unusual safety risks. Submit 15 calendar days prior to on-site work and include the requirements of EM 385-1-1, and the following:

(1) For lifts of personnel, demonstrate compliance with the requirements of 29 CFR 1926.1400.

(2) For barge mounted mobile cranes, barge stability calculations identifying barge list and trim based on anticipated loading; and load charts based on calculated list and trim. The amount of list and trim shall be within the crane manufacturer's requirements. Third Party Certification of Barge-Mounted Mobile Cranes Certify barge-mounted mobile cranes in accordance with 29 CFR 1919 by an OSHA accredited person.

g. Severe Storm Plan. In the event of a severe storm warning, the Contractor must:

(1) Secure outside equipment and materials and place materials that could be damaged in protected areas.

(2) Check surrounding area, including roof, for loose material, equipment, debris, and other objects that could be blown away or against existing facilities.

(3) Ensure that temporary erosion controls are adequate.

1.6.3.3 Activity Hazard Analysis (AHA)

The Activity Hazard Analysis (AHA) format shall be in accordance with EM 385-1-1 and as provided by the Contracting Officer at the pre work meeting. Submit the AHA for review at least 15 calendar days prior to the start of each phase. Format subsequent AHAs as amendments to the APP. The analysis should be used during daily inspections to ensure the implementation and effectiveness of the activity's safety and health controls and reviewed with all employees involved in the work. The AHA list will be reviewed periodically (at least monthly) at the Contractor supervisory safety meeting and updated as necessary when procedures, scheduling, or hazards change. Develop the activity hazard analyses using the project schedule as the basis for the activities performed. Any activities listed on the project schedule will require an AHA. Competent persons required for phases involving such things as fall protection, excavations, scaffold, and electrical work shall be identified. AHAs should be developed by the contractor, supplier, or subcontractor performing the work and provided to the prime contractor for review and submitted to the Contracting Officer for acceptance after prime contractor approval.

1.6.4 Meetings

1.6.4.1 Prework Conference

a. Contractor representatives who have a responsibility or significant role in accident prevention on the project shall attend the Prework conference. This includes the project superintendent, site safety and health officer (SSHO), quality control supervisor, or any other assigned safety and

health professionals who participated in the development of the APP (including the Activity Hazard Analyses (AHAs) and special plans, programs, and procedures associated with it).

b. Discuss the details of the submitted APP to include incorporated plans, programs, procedures and a listing of anticipated AHAs that will be developed and implemented during the performance of the contract. This list of proposed AHAs will be reviewed at the conference and an agreement will be reached between the Contractor and the Contracting Officer's representative as to which phases will require an analysis. At a minimum all definable features of work are to have an AHA developed. In addition, establish a schedule for the preparation, submittal, review, and acceptance of AHAs to preclude project delays.

c. Deficiencies in the submitted APP will be brought to the attention of the Contractor and the Contractor shall revise the plan to correct deficiencies and re-submit for acceptance. Do not begin work until there is an accepted APP. A returned APP should be corrected prior to scheduling the Prework meeting.

1.6.4.2 Safety Meetings for Employees

Conduct and document meetings as required by EM 385-1-1. Attach minutes showing contract title, signatures of attendees and a list of topics discussed to the Contractors' daily production report.

1.6.5 EMERGENCY MEDICAL TREATMENT

Contractors will arrange for their own emergency medical treatment. Government has no responsibility to provide emergency medical treatment.

1.7 NOTIFICATIONS AND REPORTS

1.7.1 Accident Notifications

a. Notify the Contracting Officer as soon as practical, but no more than four hours after any accident meeting the definition of Recordable Injuries or Illnesses or High Visibility Accidents, property damage equal to or greater than $2,000, or any weight handling equipment accident. Within notification include contractor name; contract title; type of contract; name of activity, installation or location where accident occurred; date and time of accident; names of personnel injured; extent of property damage, if any; extent of injury, if known, and brief description of accident (to include type of construction equipment used, PPE used, etc.). Preserve the conditions and evidence on the accident site until the Government investigation team arrives on-site and Government investigation is conducted.

1.7.2 Accident Reports

a. Conduct an accident investigation for recordable injuries and illnesses, as defined in "Article - Definitions" property damage accidents resulting in at least $20,000 in damages, and near misses as defined in "Article - Definiations" to establish the root cause(s) of the accident, complete the applicable NAVFAC Contractor Incident Reporting System (CIRS) and electronically submit via the NAVFAC Enterprise Safety Applications Management System (ESAMS) The Contracting Officer will provide copies of any required or special forms.

b. Near Misses: Require the completion of the applicable NAVFAC Contractor Incident Reporting System (CIRS) and electronically submit via the NAVFAC Enterprise Safety Applications Management System (ESAMS).

c. Conduct an accident investigation for any weight handling equipment accident (including rigging gear accidents) to establish the root cause(s) of the accident, complete the WHE Accident Report

(Crane and Rigging Gear) form and provide the report to the Contracting Officer within 30 calendar days of the accident. Do not proceed with crane operations until cause is determined and corrective actions have been implemented to the satisfaction of the contracting officer. The Contracting Officer will provide a blank copy of the accident report form.

1.7.3 Crane Reports

Submit crane inspection reports required in accordance with USACE EM 385-1-1,Appendix I and as specified herein with Daily Reports of Inspections.

1.8 HOT WORK

Prior to performing "Hot Work" (welding, cutting, etc.) or operating other flame-producing/spark producing devices, a written permit shall be requested from the Fire Division. CONTRACTORS ARE REQUIRED TO MEET ALL CRITERIA BEFORE A PERMIT IS ISSUED. It is mandatory to have a designated FIRE WATCH for any "Hot Work" done at this activity. The Fire Watch shall be trained in accordance with NFPA 51B and remain on-site for a minimum of 30 minutes after completion of the task or as specified on the hot work permit.

Obtain services from a NFPA Certified Marine Chemist for "HOT WORK" within or around flammable materials (such as fuel systems, welding/cutting on fuel pipes) or confined spaces (such as sewer wet wells, manholes, vaults, etc.) that have the potential for flammable or explosive atmospheres.

1.9 FACILITY OCCUPANCY CLOSURE

Streets, walks, and other facilities occupied and used by the Government shall not be closed or obstructed without written permission from the Contracting Officer.

1.10 CONFINED SPACE ENTRY REQUIREMENTS

Contractors entering and working in confined spaces performing shipyard industry work are required to follow the requirements of 29 CFR 1915. Contractors entering and working in confined spaces performing general industry work are required to follow the requirements of 29 CFR 1926 and comply with the requirements in Section 34 of EM 385-1-1, 29 CFR 1910, and 29 CFR 1910.146.

PART 2 PRODUCTS

2.1 CONFINED SPACE SIGNAGE

The Contractor shall provide permanent signs integral to or securely attached to access covers for permit-required confined spaces provided by this contract. Signs wording: "DANGER--PERMIT-REQUIRED CONFINED SPACE - DO NOT ENTER -" in bold letters a minimum of 25 mm(one inch) in height and constructed to be clearly legible with all paint removed. The signal word "DANGER" shall be red and readable from 1.52 m(5 feet).

PART 3 EXECUTION

3.1 CONSTRUCTION, DESIGN, AND OTHER WORK

Comply with EM 385-1-1, NFPA 1, NFPA 70, NFPA 70E, NFPA 241, the APP, the AHA, Federal and/or State OSHA regulations, and other related submittals and activity fire and safety regulations. The most stringent standard prevails. PPE is governed in all areas by the nature of the work the employee is performing. Use personal hearing protection at all times in designated noise hazardous areas or when performing noise hazardous tasks. Safety glasses must be carried/available on each person.

Mandatory PPE includes:

a. Hard Hat

b. Appropriate Safety Shoes

c. Reflective Vests

3.1.1 Hazardous Material Use

Each hazardous material must receive approval prior to being brought onto the job site or prior to any other use in connection with this contract. Allow a minimum of 10 working days for processing of the request for use of a hazardous material.

3.1.2 Hazardous Material Exclusions

Notwithstanding any other hazardous material used in this contract, radioactive materials or instruments capable of producing ionizing/non-ionizing radiation (with the exception of radioactive material and devices used in accordance with EM 385-1-1 such as nuclear density meters for compaction testing and laboratory equipment with radioactive sources) as well as materials which contain asbestos, mercury or polychlorinated biphenyls, di-isocynates, lead-based paint are prohibited. The Contracting Officer, upon written request by the Contractor, may consider exceptions to the use of any of the above excluded materials. The Radiation Safety Officer (RSO) must be notified prior to excepted items of radioactive material and devices being brought on base.

3.1.3 Unforeseen Hazardous Material

The design should have identified materials such as PCB, lead paint, and friable and non-friable asbestos. If material, not indicated, that may be hazardous to human health upon disturbance during operations is encountered, stop that portion of work and notify the Contracting Officer immediately. Within 14 calendar days the Government will validate if the material is hazardous. If material is not hazardous or poses no danger, the Government will direct the Contractor to proceed without change. If material is hazardous and handling of the material is necessary to accomplish the work, the Government will issue a modification pursuant to "FAR 52.243-4, Changes" and "FAR 52.236-2, Differing Site Conditions."

3.2 PRE-OUTAGE COORDINATION MEETING

Contractors are required to apply for utility outages at least 15 days in advance. As a minimum, the request should include the location of the outage, utilities being affected, duration of outage, and any necessary sketches. Special requirements for electrical outage requests are contained elsewhere in this specification section. Once approved, and prior to beginning work on the utility system requiring shut down, the Contractor shall attend a pre-outage coordination meeting with the Contracting Officer to review the scope of work and the lock-out/tag-out procedures for worker protection. No work will be performed on energized electrical circuits unless proof is provided that no other means exist. For electrical work positive cable/circuit identification must be made prior to submitting any outage request. Arrangements are to be coordinated with the Contracting Officer and Station Utilities for identification. The Contracting Officer will not accept an outage request until the Contractor satisfactorily documents that the circuits have been clearly identified. Following the application of lockout/tag out devices to all hazardous energy sources, applicable AHA should outline equipment restart methods to ensure "zero energy" state has been accomplished.

3.3 CONTROL OF HAZARDOUS ENERGY (LOCKOUT/TAGOUT)

Contractor shall ensure that each employee is familiar with and complies with these procedures and EM 385-1-1, Section 12, Control of Hazardous Energy.

3.4 FALL HAZARD PROTECTION AND PREVENTION PROGRAM

Establish a fall protection and prevention program, for the protection of all employees exposed to fall hazards. Within the program include company policy, identify responsibilities, education and training requirements, fall hazard identification, prevention and control measures, inspection, storage, care and maintenance of fall protection equipment and rescue and evacuation procedures.

3.4.1 Training

Institute a fall protection training program. As part of the Fall Hazard Protection and Prevention Program, provide training for each employee who might be exposed to fall hazards. Provide training by a competent person for fall protection in accordance with EM 385-1-1, Section 21.B.

3.4.2 Fall Protection Equipment and Systems

Enforce use of the fall protection equipment and systems designated for each specific work activity in the Fall Protection and Prevention Plan and/or AHA at all times when an employee is exposed to a fall hazard. Protect employees from fall hazards as specified in EM 385-1-1, Section 21. In addition to the required fall protection systems, safety skiff, personal floatation devices, life rings etc., are required when working above or next to water in accordance with EM 385-1-1, Paragraphs 21.N through 21.N.04. Personal fall arrest systems are required when working from an articulating or extendible boom, swing stages, or suspended platform. In addition, personal fall arrest systems are required when operating other equipment such as scissor lifts if the work platform is capable of being positioned outside the wheelbase. The need for tying-off in such equipment is to prevent ejection of the employee from the equipment during raising, lowering, or travel. Fall protection must comply with 29 CFR 1926.500, Subpart M, EM 385-1-1 and ASSE/SAFE A10.32.

3.4.3 Personal Fall Arrest Equipment

Personal fall arrest equipment, systems, subsystems, and components shall meet ASSE/SAFE Z359.1. Only a full-body harness with a shock-absorbing lanyard or self-retracting lanyard is an acceptable personal fall arrest body support device. Body belts may only be used as a positioning device system (for uses such as steel reinforcing assembly and in addition to an approved fall arrest system). Harnesses shall have a fall arrest attachment affixed to the body support (usually a Dorsal D-ring) and specifically designated for attachment to the rest of the system. Only locking snap hooks and carabiners shall be used. Webbing, straps, and ropes shall be made of synthetic fiber. The maximum free fall distance when using fall arrest equipment shall not exceed 1.8 m 6 feet. The total fall distance and any swinging of the worker (pendulum-like motion) that can occur during a fall shall always be taken into consideration when attaching a person to a fall arrest system.

3.4.4 Fall Protection for Roofing Work

Implement fall protection controls based on the type of roof being constructed and work being performed. Evaluate the roof area to be accessed for its structural integrity including weight-bearing capabilities for the projected loading.

a. Low Sloped Roofs:

(1) For work within 1.8 m(6 feet) of an edge, on low-slope roofs, Protect personnel from falling by use of personal fall arrest systems, guardrails, or safety nets. A safety monitoring system

used by itself as the only form of fall protection system is not adequate fall protection and is not authorized.

(2) For work greater than 1.8 m(6 feet) from an edge, erect and install warning lines in accordance with 29 CFR 1926.500 and EM 385-1-1.

b. Steep-Sloped Roofs: Work on steep-sloped roofs requires a personal fall arrest system, guardrails with toe-boards, or safety nets. This requirement also includes residential or housing type construction, repair, or maintenance.

3.4.5 Horizontal Lifelines

Design, install, certify and use under the supervision of a qualified person horizontal lifelines for fall protection as part of a complete fall arrest system which maintains a safety factor of 2 (29 CFR 1926.500).

3.4.6 Guardrails and Safety Nets

Design, install and use guardrails and safety nets in accordance with EM 385-1-1 and 29 CFR 1926 Subpart M.

3.4.7 Rescue and Evacuation Procedures

When personal fall arrest systems are used, the Contractor must ensure the mishap victim can self-rescue or can be rescued promptly should a fall occur. Prepare a Rescue and Evacuation Plan and include a detailed discussion of the following: methods of rescue; methods of self-rescue; equipment used; training requirement; specialized training for the rescuers; procedures for requesting rescue and medical assistance; and transportation routes to a medical facility. Include the Rescue and Evacuation Plan within the Activity Hazard Analysis (AHA) for the phase of work, in the Fall Protection and Prevention (FP&P) Plan, and the Accident Prevention Plan (APP).

3.4.8 Scaffold

Provide employees with a safe means of access to scaffold platforms. Climbing of any scaffold braces or supports not specifically designed for access is prohibited. Access scaffold platforms greater than 6 m 20 feet maximum in height by use of a scaffold stair system. Do not use vertical ladders commonly provided by scaffold system manufacturers for accessing scaffold platforms greater than 6 m(20 feet) maximum in height. The use of an adequate gate is required. Ensure that employees are qualified to perform scaffold erection and dismantling. Do not use scaffold without the capability of supporting at least four times the maximum intended load or without appropriate fall protection as delineated in the accepted fall protection and prevention plan. Stationary scaffolds must be attached to structural building components to safeguard against tipping forward or backward. Give special care to ensure scaffold systems are not overloaded. Side brackets used to extend scaffold platforms on self-supported scaffold systems for the storage of material are prohibited. The first tie-in shall be at a minimum at the height equal to 4 times the width of the smallest dimension of the scaffold base. Place work platforms on mud sills. Scaffold or work platform erectors shall have fall protection during the erection and dismantling of scaffolding or work platforms that are more than six feet. Delineate fall protection requirements when working above six feet or above dangerous operations in the Fall Protection Program and Prevention (FP&P) Plan and Activity Hazard Analysis (AHA) for the phase of work.

3.4.9 Fall Prevention during Design Phase

During design phase the Contractor shall consider and eliminate fall hazards encountered during the operation and maintenance evolutions of the facility. If it is not feasible to eliminate or prevent the need to work at heights with its subsequent exposure to fall hazards, control measures should be included in

the design to protect personnel conducting maintenance work after completion of the project. In addition to the detailed requirements included in the provisions of this contract, the design work shall incorporate the requirements of 29 CFR 1910 Standards and ASSE/SAFE Z359.0, ASSE/SAFE Z359.1, ASSE/SAFE Z359.2, ASSE/SAFE Z359.3, ASSE/SAFE Z359.4 and ASSE/SAFE A1264.1, NFPA 1.

3.5 EQUIPMENT

3.5.1 Material Handling and Applicable Mechanized Equipment

a. Material handling equipment such as forklifts shall not be modified with work platform attachments for supporting employees unless specifically delineated in the manufacturer's printed operating instructions.

b. The use of hooks on equipment for lifting of material must be in accordance with manufacturer's printed instructions. Additionally, when material handling equipment is used as a crane it must meet NAVFAC P-307 requirements in Sections 1.7.2, "Contractor Operated Cranes," and 12, "Investigation and Reporting of Crane and Rigging Gear Accidents."

c. Operators of forklifts or power industrial trucks shall be licensed in accordance with OSHA. Proof of qualifications for operator shall be kept on the project site and addressed as part of the AHA.

d. Manufacture specifications or owner’s manual for the equipment shall be on-site and reviewed for additional safety precautions or requirements that are sometimes not identified by OSHA or EM 385-1-1. Incorporate such additional safety precautions or requirements into the AHAs.

e. Machinery & Mechanized Equipment are subject to additional Navy proof of certification. A certification form for acceptance by the Contracting Officer prior to being placed into use may be required.

3.5.2 Weight Handling Equipment

a. Equip cranes and derricks as specified in EM 385-1-1, section 16.

b. Notify the Contracting Officer 15 days in advance of any cranes entering the activity so that necessary quality assurance spot checks can be coordinated. Prior to cranes entering federal activities, a Crane Access Permit must be obtained from the Contracting Officer. A copy of the permitting process will be provided at the Preconstruction Conference. Contractor's operator shall remain with the crane during the spot check.

c. Comply with the crane manufacturer's specifications and limitations for erection and operation of cranes and hoists used in support of the work. Perform erection under the supervision of a designated person (as defined in ASME B30.5). Perform all testing in accordance with the manufacturer's recommended procedures.

d. Comply with ASME B30.5 for mobile and locomotive cranes, ASME B30.22 for articulating boom cranes, ASME B30.3 for construction tower cranes, and ASME B30.8 for floating cranes and floating derricks.

e. Under no circumstance shall a Contractor make a lift at or above 90 percent of the cranes rated capacity in any configuration.

f. When operating in the vicinity of overhead transmission lines, operators and riggers shall be alert to this special hazard and follow the requirements of EM 385-1-1 Section 11, NAVFAC P-307 Figure 10-3 and ASME B30.5 or ASME B30.22 as applicable.

g. Do not crane suspended personnel work platforms (baskets) unless the Contractor proves that using any other access to the work location would provide a greater hazard to the workers or is impossible. Do not lift personnel with a line hoist or friction crane.

h. Inspect, maintain, and recharge portable fire extinguishers as specified in NFPA 10, Standard for Portable Fire Extinguishers.

i. All employees must keep clear of loads about to be lifted and of suspended loads.

j. Use cribbing when performing lifts on outriggers.

k. The crane hook/block must be positioned directly over the load. Side loading of the crane is prohibited.

l. A physical barricade must be positioned to prevent personnel from entering the counterweight swing (tail swing) area of the crane.

m. Certification records which include the date of inspection, signature of the person performing the inspection, and the serial number or other identifier of the crane that was inspected shall always be available for review by Contracting Officer personnel.

n. Written reports listing the load test procedures used along with any repairs or alterations performed on the crane shall be available for review by Contracting Officer personnel.

o. Certify that all crane operators have been trained in proper use of all safety devices (e.g. anti-two block devices).

p. Take steps to ensure that wind speed does not contribute to loss of control of the load during lifting operations. Prior to conducting lifting operations set a maximum wind speed at which a crane can be safely operated based on the equipment being used, the load being lifted, experience of operators and riggers, and hazards on the work site. This maximum wind speed determination shall be included as part of the activity hazard analysis plan for that operation.

3.6 EXCAVATIONS

Soil classification must be performed by a competent person in accordance with 29 CFR 1926 and EM 385-1-1.

3.6.1 Utility Locations

All underground utilities in the work area must be positively identified by a third party, independent, private utility locating company in addition to any station locating service and coordinated with the station utility department.

3.6.2 Utility Location Verification

The Contractor must physically verify underground utility locations, including utility depth, by hand digging using wood or fiberglass handled tools when any adjacent construction work is expected to come within three feet of the underground system.

3.6.3 Utilities Within and Under Concrete, Bituminous Asphalt, and Other Impervious Surfaces

Utilities located within and under concrete slabs or pier structures, bridges, parking areas, and the like, are extremely difficult to identify. Whenever contract work involves chipping, saw cutting, or core drilling

through concrete, bituminous asphalt or other impervious surfaces, the existing utility location must be coordinated with station utility departments in addition to location and depth verification by a third party, independent, private locating company. The third party, independent, private locating company shall locate utility depth by use of Ground Penetrating Radar (GPR), X-ray, bore scope, or ultrasound prior to the start of demolition and construction. Outages to isolate utility systems must be used in circumstances where utilities are unable to be positively identified. The use of historical drawings does not alleviate the Contractor from meeting this requirement.

3.7 ELECTRICAL

3.7.1 Conduct of Electrical Work

As delineated in EM 385-1-1 electrical work is to be conducted in a de-energized state unless there is no alternative method for accomplishing the work. In those cases an energized work permit shall be obtained from the contracting officer. The energized work permit application shall be accompanied by the AHA and a summary of why the equipment/circuit needs to be worked energized. Underground electrical spaces must be certified safe for entry before entering to conduct work. Cables that will be cut must be positively identified and de-energized prior to performing each cut. Attachment of temporary grounds shall be in accordance with ASTM F855 and IEEE 1048. Perform all high voltage cable cutting remotely using hydraulic cutting tool. When racking in or live switching of circuit breakers, no additional person other than the switch operator will be allowed in the space during the actual operation. Plan so that work near energized parts is minimized to the fullest extent possible. Use of electrical outages clear of any energized electrical sources is the preferred method. When working in energized substations, only qualified electrical workers shall be permitted to enter. When work requires Contractor to work near energized circuits as defined by the NFPA 70, high voltage personnel must use personal protective equipment that includes, as a minimum, electrical hard hat, safety shoes, insulating gloves and electrical arc flash protection for personnel as required by NFPA 70E. Insulating blankets, hearing protection, and switching suits may also be required, depending on the specific job and as delineated in the Contractor's AHA. Contractor shall ensure that each employee is familiar with and complies with these procedures and 29 CFR 1910.147.

3.7.2 Portable Extension Cords

Size portable extension cords in accordance with manufacturer ratings for the tool to be powered and protected from damage. Immediately removed from service all damaged extension cords. Portable extension cords shall meet the requirements of NFPA 70E and OSHA electrical standards.

3.8 WORK IN CONFINED SPACES

In addition to applicable sections of EM 385-1-1, 29 CFR 1910.146, CPL 2.100 and 29 CFR 1926.21 the Contractor shall comply with the following. Any potential for a hazard in the confined space requires a permit system to be used.

a. Entry Procedures. Prohibit entry into a confined space by personnel for any purpose, including hot work, until the qualified person has conducted appropriate tests to ensure the confined or enclosed space is safe for the work intended and that all potential hazards are controlled or eliminated and documented. (See Section 06.I.06 of EM 385-1-1 for entry procedures.) All hazards pertaining to the space shall be reviewed with each employee during review of the AHA.

b. Forced air ventilation is required for all confined space entry operations and the minimum air exchange requirements must be maintained to ensure exposure to any hazardous atmosphere is kept below its' action level regardless of classification.

c. Sewer wet wells require continuous atmosphere monitoring with audible alarm for toxic gas detection in addition to continuous forced air ventilation regardless of space classification.

3.9 USE OF EXPLOSIVES

Explosives shall not be used or brought to the project site without prior written approval from the Contracting Officer. Such approval shall not relieve the Contractor of responsibility for injury to persons or for damage to property due to blasting operations. Storage of explosives, when permitted on Government property, shall be only where directed and in approved storage facilities. These facilities shall be kept locked at all times except for inspection, delivery, and withdrawal of explosives.

-- End of Section --

SECTION 01 42 15

METRIC MEASUREMENTS
02/14

PART 1 GENERAL

1.1 REFERENCES

The publications listed below form a part of this specification to the extent referenced. The publications are referred to within the text by the basic designation only.

ASTM INTERNATIONAL (ASTM)

ASTM SI10	(2010) American National Standard for Use of the International System of Units (SI): The Modern Metric System

1.2 GENERAL

This project includes metric units of measurements. The metric units are the International System of Units (SI) developed and maintained by the General Conference on Weights and Measures (CGPM); the name International System of Units and the international abbreviation SI were adopted by the 11th CGPM in 1960. A number of circumstances require that both metric SI units and English inch-pound (I-P) units be included in a section of the specifications. When both metric and I-P measurements are included, the section may contain measurements for products that are manufactured to I-P dimensions and then expressed in mathematically converted metric value (soft metric) or, it may contain measurements for products that are manufactured to an industry recognized rounded metric (hard metric) dimensions but are allowed to be substituted by I-P products to comply with the law. Dual measurements are also included to indicate industry and/or Government standards, test values or other controlling factors, such as the code requirements where I-P values are needed for clarity or to trace back to the referenced standards, test values or codes.

1.3 USE OF MEASUREMENTS IN SPECIFICATIONS

Measurements in specifications shall be either in SI or I-P units as indicated, except for soft metric measurements or as otherwise authorized. When only SI or I-P measurements are specified for a product, the product shall be procured in the specified units (SI or I-P) unless otherwise authorized by the Contracting Officer. The Contractor is responsible for all associated labor and materials when authorized to substitute one system of units for another and for the final assembly and performance of the specified work and/or products.

1.3.1 Hard Metric

A hard metric measurement is indicated by an SI value with no expressed correlation to an I-P value. Hard metric measurements are often used for field data such as distance from one point to another or distance above the floor. Products are considered to be hard metric when they are manufactured to metric dimensions or have an industry recognized metric designation.

1.3.2 Soft Metric

a. A soft metric measurement is indicated by an SI value which is a mathematical conversion of the I-P value shown in parentheses (e.g. 38.1 mm (1-1/2 inches)). Soft metric measurements are used for measurements pertaining to products, test values, and other situations where the

I-P units are the standard for manufacture, verification, or other controlling factor. The I-P value shall govern while the metric measurement is provided for information.

b. A soft metric measurement is also indicated for products that are manufactured in industry designated metric dimensions but are required by law to allow substitute I-P products. These measurements are indicated by a manufacturing hard metric product dimension followed by the substitute I-P equivalent value in parentheses (e.g., 190 x 190 x 390 mm (7-5/8 x 7-5/8 x 15-5/8 inches)).

1.3.3 Neutral

A neutral measurement is indicated by an identifier which has no expressed relation to either an SI or an I-P value (e.g., American Wire Gage (AWG) which indicates thickness but in itself is neither SI nor I-P).

1.4 COORDINATION

Discrepancies, such as mismatches or product unavailability, arising from use of both metric and non-metric measurements and discrepancies between the measurements in the specifications and the measurements in the drawings shall be brought to the attention of the Contracting Officer for resolution.

1.5 RELATIONSHIP TO SUBMITTALS

Submittals for Government approval or for information only shall cover the SI or I-P products actually being furnished for the project. Submit the required drawings and calculations in the same units used in the contract documents describing the product or requirement unless otherwise instructed or approved. Use ASTM SI10 as the basis for establishing metric measurements required to be used in submittals.

-- End of Document --

SECTION 01 45 00.05 20

DESIGN AND CONSTRUCTION QUALITY CONTROL
05/14

PART 1 GENERAL

1.1 REFERENCES

The publications listed below form a part of this specification to the extent referenced. The publications are referred to in the text by the basic designation only.

ASTM INTERNATIONAL (ASTM)

ASTM E329	(2013b) Standard Specification for Agencies Engaged in the Testing and/or Inspection of Materials Used in Construction

U.S. ARMY CORPS OF ENGINEERS (USACE)

EM 385-1-1	(2008; Errata 1-2010; Changes 1-3 2010; Changes 4-6 2011; Change 7 2012) Safety and Health Requirements Manual

1.2 SUBMITTALS

The use of a "G" following a submittal indicates that a Government approval action is required. Submit the following in accordance with Section 01 33 10.05 20 DESIGN SUBMITTAL PROCEDURES and Section 01 33 00.05 20 CONSTRUCTION SUBMITTAL PROCEDURES.

SD-01 Preconstruction Submittals

Design Quality Control (DQC) Plan; G

Submit a DQC Plan prior to the Post Award Kickoff Meeting.

Construction Quality Control (CQC) Plan; G

Submit a Construction QC Plan prior to start of construction.

Commissioning Plan; G

Submit a Commissioning Plan within 60 days of approval of Cx Authority.

SD-07 Certificates

Preliminary Inspections and Final Acceptance Testing; G

Final Life Safety/Fire Protection Certification; G

IBC Special Inspections Certification; G

SD-11 Closeout Submittals

Summary Commissioning Report; G

1.3 QC PROGRAM REQUIREMENTS

Establish and maintain a QC program that is administered by a Design and Construction Quality Control organization, using Quality Control (Design and Construction) Plans, Commissioning Plans and Reports, meetings, a Coordination and Mutual Understanding Meeting, three phases of control, submittal review and approval, testing, completion inspections, and QC certifications and documentation necessary to provide design, materials, equipment, workmanship, fabrication, construction and operations which comply with the requirements of this Contract. The QC program shall cover on-site and off-site work. No construction work or testing may be performed unless the QC Manager is on the work site.

1.3.1 QC Plan Meeting

Prior to submission of the QC Plan, the QC Manager may request a meeting with the Contracting Officer to discuss the QC Plan requirements of this Contract.

The purpose of this meeting is to develop a mutual understanding of the QC Plan requirements prior to plan development and submission and to agree on the Contractor's list of Definable Features of Work (DFOWs).

1.3.2 Mutual Understanding Meeting

The purpose of this meeting is to develop a mutual understanding of the QC Plans, including documentation, administration, requirements & procedures, coordination of activities to be performed, and the coordination of the contractor's management, production and QC personnel. At the meeting, explain in detail how the three phases of quality control will be implemented for each DFOW.

1.3.3 Design and Construction Quality Control Plans

Provide a project specific Design Quality Control (DQC) Plan and Construction Quality Control (CQC) Plan, for review and approval by the Contracting Officer. Submit a DQC Plan prior to the Post Award Kickoff Meeting. Perform no design until the DQC Plan is approved. Submit a Construction QC Plan prior to start of construction. Perform no construction until the CQC Plan is approved. Include the following:

a. The QC organization for this contract, including member resumes.

b. A letter from an officer of the company designating the QC Manager, Alternate QC Manager, DQC Manager, and their authority.

c. QC Manager qualifications in resume format.

d. DQC Manager qualifications in resume format.

e. List of DFOW including list of design submittal packaging. DFOW is a task that is separate and distinct from other tasks and has control requirements and work crews unique to the task.

f. For the CQC Plan, a plan to implement the "Three Phases of Control" for each DFOW.

g. For the CQC Plan, a testing Plan, log and list of personnel and accredited laboratories that will perform tests. Construction materials testing laboratories must be accredited by a laboratory accreditation authority and will be required to submit a copy of the Certificate of Accreditation and Scope of Accreditation with the testing plan. Coordinate this testing Plan with the Commissioning Plan verification testing requirements to avoid duplication of effort.

h. Submittal Register including design submittals, listing personnel who will review submittals and noting submittals for Contracting Officer review.

i. Procedures for submitting and reviewing design changes/ variations prior to submission to the Contracting Officer.

j. As a part of the Contractor's CQC plan, provide a statement of Special Inspections prepared by the Designer of Record (DOR) describing a complete list of materials and work requiring special inspections, the inspections to be performed and any applicable quality assurance plans and structural observations. Implement the applicable requirements of the International Building Code (IBC), Chapter 17 "Structural Tests and Special Inspections." Include a listing of the individuals, approved agencies or firms that will be retained for conducting the required special inspections accompanied by a description of individual inspector's experience and a copy of all required certifications. Provide structural tests and special inspections, as outlined in Chapter 17 of the IBC, conducted by individuals and agents that are under the direct supervision of a Registered Design Professional (RDP) and meet the requirements of ASTM E329.

k. As part of the Contractor's DQC plan, provide a statement of Life Safety and Fire Protection Features Inspections and Testing prepared by the Fire Protection Designer of Record. Examples of life safety and fire protection features include, but are not limited to, water distribution systems including fire pumps and fire hydrants, fire resistive assemblies such as fire rated walls/partitions, through -penetration firestop systems, spray-applied fire proofing of structural components, fire alarm and detection systems, fire suppression and standpipe systems, means of egress components, emergency and exit lighting fixtures. The plan will include a listing of the individuals, approved agencies or firms that will be retained for conducting the required inspections and tests accompanied by a description of individual inspector's experience and a copy of all required certifications. Submit additional copies of this plan to the NAVFAC Fire Protection Engineer and the Installation Fire Chief. Include the following:

(1) Comprehensive list of systems, components or features to be inspected and tested.

(2) Description of performance verification testing activities for each system or component.

(3) Procedures and schedules for functional performance tests of all systems requiring functional testing.

l. For the DQC plan, submit a formal Communication Plan that indicates the frequency of design meetings and what information is covered in those meetings, key design decision points tied to the Network Analysis Schedule and how the DOR plans to include the Government in those decisions, peer review procedures, interdisciplinary coordination, design review procedures, comment resolution, etc.

The Communication Plan will emphasize key decisions and possible problems the Contractor and Government may encounter during the design phase of the project. Provide a plan to discuss design alternatives and design coordination with the stakeholders at the key decision points as they arise on the project. Identify individual stakeholders and suggested communication methods that will be employed to expedite and facilitate each anticipated critical decision. Communication methods may include: Concept Design Workshop, over-the-shoulder review meetings, presentation at client's office, lifecycle cost analysis presentation, technical phone conversation, and formal review meeting. The design portion of the Communication Plan must be written by the DQC Manager and confirmed during the Post Award Kick off Partnering. Update the Communication Plan at every Partnering meeting.

m. For the DQC Plan, procedures for insuring the design documents are submitted in accordance with FC 1-300-09N, "Navy and Marine Corps Design Procedures" and other procedures to ensure disciplines have been properly coordinated to eliminate conflicts.

n. For the DQC Plan, provide Quality Control Documentation procedures such as QC review sets and QC comments to demonstrate that cross checking of all engineering disciple's design drawings and specifications has taken place. Exhibit in the QC review documentation a checking process of the design documents for completeness, accuracy, and constructability.

o. For the DQC Plan, a list of design subcontractors and the scope of the work which each firm will accomplish.

1.4 QC ORGANIZATION

The QC Manager must manage the QC organization and report to an officer of the firm and not be subordinate to the Project Superintendent or the Project Manager.

1.4.1 QC and Alternate QC Manager

QC and Alternate QC Manager qualifications:

a. Complete the course entitled "Construction Quality Management (CQM) for Contractors." and maintain a current certificate. The QC Manager that does not have a current certification must obtain the CQM for Contractors course certification within 90 days of award. This course is periodically offered by the Naval Facilities Engineering Command and the Army Corps of Engineers. Contact the Contracting Officer for class schedule information.

b. Familiar with requirements of EM 385-1-1, and experience in the areas of hazard identification and safety compliance.

c. Five years of combined experience as a Superintendent, QC Manager, Project Manager, or Project Engineer on similar size and type construction contracts, and at least two years experience as a QC Manager.

QC and Alternate QC Manager responsibilities:

a. Participate in the Post Award Kick-off, Partnering, Preconstruction, Design Development, and Coordination and Mutual Understanding Meetings.

b. Implement the "Three Phase of Control" plan for each DFOW and notify the Contracting Officer at least 2 working days in advance of each Preparatory and Initial Phase meeting. Submit respective checklists to the Contracting Officer the next business day.

c. Ensure that no construction begins before the DOR has finalized the design for that segment of work, and construction submittals are approved as required.

d. Inspect all work and rework, using International Conference of Building Officials certified QC specialists as applicable, to ensure its compliance with contract requirements. Maintain a rework log.

e. Immediately stop any segment of work, which does not comply with the contract requirements and direct the removal and replacement of any defective work.

f. Remove any individual from the site who fails to perform their work in a skillful, safe and workmanlike manner or whose work does not comply with the contract plans and specifications.

g. Prepare daily QC Reports.

h. Ensure that Contractor Production Reports are prepared daily.

i. Hold weekly QC meetings with the DQC Manager, CxA, DOR (or representative), Superintendent and the Contracting Officer; ensure participation suitable for the phase of work. Distribute minutes of these meetings.

j. Ensure that design and construction submittals are reviewed and approved, as required by the contract, prior to allowing material on site and work to proceed with these items. Maintain a submittal register.

k. Update As-built drawings daily, maintaining up-to-date set on site.

l. Maintain a testing plan and log. Ensure that all testing is performed in accordance with the contract. Review all test reports and notify the Contracting Officer of all deficiencies, along with a proposal for corrective action.

m. Maintain rework log on site, noting dates deficiency identified, and date corrected.

n. Certify and sign statement on each invoice that all work to be paid under the invoice has been completed in accordance with contract requirements.

o. Perform Punch-out and participate in Pre-final and Final acceptance Inspections. Submit list of deficiencies to the Contracting Officer for each inspection. Correct all deficiencies prior to the Final inspection. Notify Contracting Officer prior to final inspection to establish a schedule date acceptable by the Contracting Officer.

p. Ensure that all required keys, operation and maintenance manuals, warranty certificates, and the As-built drawings are correct and complete, in accordance with the contract, and submitted to the Contracting Officer.

q. Assure that all applicable tests, special inspections, and observations required by the contract are performed.

r. Coordinate all factory and on-site testing, Testing Laboratory personnel, QC Specialists, and any other inspection and testing personnel required by this Contract.

s. Notify the Contracting Officer of any proposed changes to the QC plan.

t. Retain a copy of approved submittals at project site, including Contractor's copy of approved samples.

u. Update the Performance Assessment Plan as described in Section 01 31 19.05 20, POST AWARD MEETINGS and discuss monthly at a QC meeting.

1.4.2 DQC Manager

Provide DQC Manager that is a member of the QC organization, that coordinates actions with the QC Manager ,and that is not subordinate to the Project Superintendent or the Project Manager.

DQC Manager qualifications:

a. A minimum of 5 years of experience as a design Architect or Engineer on similar size and type designs / or design-build contracts. Provide education, experience, and management capabilities on similar size and type contracts.

b. Be a registered professional engineer or architect with an active registration. Provide proof of registration as part of the resume submittal package.

c. Complete the course entitled "Construction Quality Management (CQM) for Contractors."

DQC Manager responsibilities:

a. Be responsible for the design integrity, professional design standards, and all design services required.

b. Be a member of the Designer of Record's (DOR) firm.

c. Be responsible for development of the design portion of the QC Plan, incorporation and maintenance of the approved Design Schedule, and the preparation of DQC Reports and minutes of all design meetings.

d. Participate in the Post Award Kick-Off, all design planning meetings, design presentations, partnering, and QC meetings.

e. Implement the DQC plan and remain on staff involved with the project until completion of the project.

f. Be cognizant of and assure that all design documents on the project have been developed in accordance with the Contract.

g. Provide Design Quality Control Documentation (DQCD) which indicates design coordination of the engineering disciplines. Submit DQCD with the prefinal and final design submittals as required in Section 01 33 10.05 20, DESIGN SUBMITTAL PROCEDURES.

h. Develop the submittal register. Coordinate with each DOR to determine what items need to be submitted, and who needs to approve.

i. Provide QC certification for design compliance.

j. Certify and sign statement on each invoice that all work to be paid to the DOR under the invoice has been completed in accordance with the contract requirements.

k. Prepare weekly DQC Reports that document the work the design team accomplished that week.

1.4.3 QC Specialists

Provide QC Specialists to assist and report to the QC Manager. QC specialist may perform production related duties but must be allowed sufficient time to perform their assigned quality control duties. QC Specialists are required to attend the Coordination and Mutual Understanding Meeting, QC meetings and be physically present at the construction site to perform the three phases of control and prepare documentation for each definable feature of work in their area of responsibility at the frequency specified below.

1.4.3.1 Fire Protection QC Specialist

Provide Fire Protection QC Specialist (FPQC) that is a U.S. Registered Professional Engineer and an integral part of the Prime Contractor's Quality Control Organization. Provide FPQC with no business relationships (owner, partner, operating officer, distributor, salesman, or technical representative) with any fire protection equipment device manufacturers, suppliers or installers for any such equipment provided as part of this project. The Fire Protection Designer of Record may serve as the lead Fire Protection QC Specialist, provided the following qualifications are met.

a. Qualifications/Experience: The FPQC to have obtained their professional registration by successfully completing the Fire Protection Engineering discipline examination. FPQC to have a minimum of 5 years full time and exclusive experience in every aspect of facility design and construction as it relates to fire protection, which includes, but is not limited to, building code analysis, life safety code analysis, design of automatic detection and suppression systems, passive fire protection design, water supply analysis, and a multi-discipline coordination reviews, and construction surveillance.

b. Area of Responsibility: The FPQC is responsible for assuring the proper construction and installation of life safety and fire protection features across all disciplines and trades. The FPQC is responsible for assuring that life safety and fire protection features are provided in accordance with the design documents, approved construction submittals, and manufacturer's requirements. Examples include, but are not limited to, water distribution systems including fire pumps and fire hydrants, fire resistive assemblies such as spray-applied fire proofing of structural components and fire rated walls/partitions, fire alarm and detection systems, fire suppression and standpipe systems, emergency and exit lighting fixtures, etc.

c. Construction Surveillance: The FPQC is responsible for reviewing and implementing the QC Plan developed by the Fire Protection DOR. The FPQC is to visit the construction site as necessary to ensure life safety and fire protection systems are being constructed, applied, and installed in accordance with the approved design documents, approved construction submittals, and manufacturer's requirements. Frequency and duration of the field visits are dependent upon particular system components, system complexity, and phase of construction. At a minimum, visit field just prior to installation of suspended ceiling systems to inspect the integrity of passive fire protection features and fire suppression system piping, and required performance verification testing of all life safety and fire protection systems identified below and in Part 4.

   1) Preliminary Inspections and Final Acceptance Testing: FPQC to personally witness all preliminary inspections of fire alarm/detection and suppression systems. Once preliminary inspections have been successfully completed, the FPQC to submit a signed certificate to the QC Manager that systems are ready for final inspection and testing. The Naval Facilities Engineering Command Fire Protection Engineer will witness formal tests and approve all systems before they are accepted. Submit the request for formal inspection at least 15 days prior to the date the inspection is to take place. Provide 10 days advance notice to the Contracting Officer and the activity Fire Inspection Office of scheduled final inspections.

d. QC Documentation and Certifications: FPQC to prepare the following documentation and certification. Submit additional copies to the NAVFAC Fire Protection Engineer and the Installation Fire Chief.

   (1) Field visit reports. Submit reports documenting all field visits and summarizing all findings.

   (2) Inspection and Test reports and certificates. Submit in accordance with the applicable codes, standards, and this RFP.

(3) Final Life Safety/Fire Protection Certification. The provide FPQC certification that all life safety and fire protection systems have been inspected and in the FPQC's professional judgment,; have been installed in accordance with the contract documents, approved submittals, and manufacturer's requirements. This certification is to summarize all life safety and fire protection features, and is to bear the professional seal of the fire protection engineer.

1.4.3.2 Mechanical QC Specialist

Provide IBC Special Inspections Certification from the following specialist(s):

Qualification/Experience in Area of Responsibility	Area of Responsibility	Frequency
Mechanical Inspector, International Code Council (ICC) Certified / 5 years minimum	Installation and Testing of Boilers	Minimum 3 times a weekduring installation and full-time during testing
Certified Elevator Inspector, certified by an organization accredited by ASME / 5 years minimum	Retesting to ensure safety code, specification, and building code compliance; provide testing verification report prior to beginning final acceptance test	Once every two weeks during installation, full time during Pretesting
Registered Mechanical Engineer (PE)/ QC Specialist	Testing of Installed mechanical systems	Full time during testing

1.5 THREE PHASES OF CONTROL

The Three Phases of Control shall adequately cover both on-site and off-site work and shall include the following for each DFOW.

1.5.1 Preparatory Phase

Notify the Contracting Officer at least two work days in advance of each preparatory phase meeting. The meeting shall be conducted by the QC Manager and attended by the Project Superintendent, QC Specialists, and the foreman responsible for the DFOW. The DQC Manager shall also attend if required by structural tests and special inspections, as outlined in Chapter 17 of the IBC and the DQC Plan. When the DFOW will be accomplished by a subcontractor, that subcontractor's foreman shall attend the preparatory phase meeting. Document the results of the preparatory phase actions in the daily Contractor Quality Control Report and in the Preparatory Phase Checklist. Perform the following prior to beginning work on each DFOW:

a. Review each paragraph of the applicable specification sections;

b. Review the Contract drawings;

c. Verify that appropriate shop drawings and submittals for materials and equipment have been submitted and approved. Verify receipt of approved factory test results, when required;

d. Review the testing plan and ensure that provisions have been made to provide the required QC testing;

e. Examine the work area to ensure that the required preliminary work has been completed;

f. Examine the required materials, equipment and sample work to ensure that they are on hand and conform to the approved shop drawings and submitted data;

g. Discuss the specific controls used in construction methods, construction tolerances, workmanship standards, and the approach that will be used to provide quality construction by planning ahead and identifying potential problems for each DFOW; and

h. Review the APP and appropriate Activity Hazard Analysis (AHA) to ensure that applicable safety requirements are met, and that required Material Safety Data Sheets (MSDS) are submitted.

1.5.2 Initial Phase

Notify the Contracting Officer at least two work days in advance of each initial phase. When construction crews are ready to start work on a DFOW, conduct the initial phase with the Project Superintendent, QC Specialists, and the foreman responsible for that DFOW. The DQC Manager shall also attend if required by structural tests and special inspections, as outlined in Chapter 17 of the IBC and the DQC Plan. Observe the initial segment of the DFOW to ensure that the work complies with Contract requirements. Document the results of the initial phase in the daily CQC Report and in Initial Phase Checklist. Repeat the initial phase for each new crew to work on-site, or when acceptable levels of specified quality are not being met. Perform the following for each DFOW:

a. Establish the quality of workmanship required;

b. Resolve conflicts;

c. Ensure that testing is performed by the approved laboratory, and

d. Check work procedures for compliance with the APP and the appropriate AHA to ensure that applicable safety requirements are met.

e. Ensure manufacturer's representative has performed necessary inspections, if required.

1.5.3 Follow-Up Phase

Perform the following for on-going work daily, or more frequently as necessary, until the completion of each DFOW and document in the daily CQC Report:

a. Ensure the work is in compliance with Contract requirements;

b. Maintain the quality of workmanship required;

c. Ensure that testing is performed by the approved laboratory; and

d. Ensure that rework items are being corrected.

1.5.4 Additional Preparatory and Initial Phases

Conduct additional preparatory and initial phases on the same DFOW if the quality of on-going work is unacceptable, if there are changes in the applicable QC organization, if there are changes in the on-site production supervision or work crew, if work on a DFOW is resumed after substantial period of inactivity, or if other problems develop.

1.5.5 Notification of Three Phases of Control for Off-Site Work

Notify the Contracting Officer at least two weeks prior to the start of the preparatory and initial phases.

1.6 COMPLETION INSPECTIONS

Perform the necessary punchout, prefinal, and final inspections, compile punchlists, and correct deficiencies.

1.6.1 Punch-Out Inspection

Near the completion of all work or any increment thereof, established by a completion time stated in the Contract Clause entitled "Commencement, Prosecution, and Completion of Work," or stated elsewhere in the specifications, the QC Manager and the CxA must conduct an inspection of the work and develop a "punch list" of items which do not conform to the approved drawings, specifications and Contract. Include in the punch list any remaining items on the "Rework Items List", which were not corrected prior to the Punch-Out Inspection. Include within the punch list the estimated date by which the deficiencies will be corrected. Provide a copy of the punch list to the Contracting Officer. The QC Manager, or staff, must make follow-on inspections to ascertain that all deficiencies have been corrected. Once this is accomplished, notify the Contracting Officer that the facility is ready for the Government "Pre-Final Inspection".

1.6.2 Pre-Final Inspection

Near the completion of all work or any increment thereof, established by a completion time stated in the Contract Clause entitled "Commencement, Prosecution, and Completion of Work," or stated elsewhere in the specifications, the QC Manager and the CxA must conduct an inspection of the work and develop a "punch list" of items which do not conform to the approved drawings, specifications and Contract. Include in the punch list any remaining items on the "Rework Items List", which were not corrected prior to the Punch-Out Inspection. Include within the punch list the estimated date by which the deficiencies will be corrected. Provide a copy of the punch list to the Contracting Officer. The QC Manager, or staff, must make follow-on inspections to ascertain that all deficiencies have been corrected. Once this is accomplished, notify the Contracting Officer that the facility is ready for the Government "Pre-Final Inspection".

1.6.3 Final Acceptance Inspection

Notify the Contracting Officer at least 14 calendar days prior to the date a final acceptance inspection can be held. State within the notice that all items previously identified on the pre-final punch list will be corrected and acceptable, along with any other unfinished Contract work, by the date of the final acceptance inspection. The Contractor must be represented by the QC Manager, the Project Superintendent, the CA, and others deemed necessary. Attendees for the Government will include the Contracting Officer, other FEAD/ROICC personnel, and personnel representing the Client. Failure of the Contractor to have all contract work acceptably complete for this inspection will because for the Contracting Officer to bill the Contractor for the Government's additional inspection cost in accordance with the Contract Clause entitled "Inspection of Construction."

1.7 TESTING

1.7.1 Accreditation Requirements

Construction materials testing laboratories must be accredited by a laboratory accreditation authority and will be required to submit a copy of the Certificate of Accreditation and Scope of Accreditation. The laboratory's scope of accreditation must include the appropriate ASTM standards (E329, C1077, D3666, D3740, A880, E543) listed in the technical sections of the specifications. Laboratories engaged in Hazardous Materials Testing shall meet the requirements of OSHA and EPA. The policy applies to the specific laboratory performing the actual testing, not just the Corporate Office.

1.7.2 Laboratory Accreditation Authorities

Laboratory Accreditation Authorities include the National Voluntary Laboratory Accreditation Program (NVLAP) administered by the National Institute of Standards and Technology at http://ts.nist.gov/ts/htdocs/210/214/214.htm, the American Association of State Highway and Transportation Officials (AASHTO) program at http://www.transportation.org, International Accreditation Services, Inc. (IAS) at http://www.iasonline.org, U. S. Army Corps of Engineers Materials Testing Center (MTC)at http://gsl.erdc.usace.army.mil/SL/MTC/, the American Association for Laboratory Accreditation (A2LA) program at http://www.a2la.org/.

1.7.3 Capability Check

The Contracting Officer retains the right to check laboratory equipment in the proposed laboratory and the laboratory technician's testing procedures, techniques, and other items pertinent to testing, for compliance with the standards set forth in this Contract.

1.7.4 Test Results

Furnish the signed reports, certifications, and a summary report of field tests at the end of each month to the Contracting Officer. Attach a copy of the summary report to the last daily Contractor Quality Control Report of each month. Provide a copy of the signed test reports and certifications to the eOMSI preparer for inclusion into the eOMSI documentation.

1.8 DOCUMENTATION

Maintain current and complete records of on-site and off-site QC program operations and activities.

PART 2 PRODUCTS

Not used.

PART 3 EXECUTION

Not used.

-- End of Section --

SECTION 01 50 00.05 20

TEMPORARY FACILITIES AND CONTROLS FOR DESIGN-BUILD
11/07

PART 1 GENERAL

1.1 REFERENCES

The publications listed below form a part of this specification to the extent referenced. The publications are referred to within the text by the basic designation only.

AMERICAN WATER WORKS ASSOCIATION (AWWA)

AWWA C511	(2007) Standard for Reduced-Pressure Principle Backflow Prevention Assembly

FOUNDATION FOR CROSS-CONNECTION CONTROL AND HYDRAULIC RESEARCH (FCCCHR)

FCCCHR List	(continuously updated) List of Approved Backflow Prevention Assemblies
FCCCHR Manual	(10th Edition) Manual of Cross-Connection Control

NATIONAL FIRE PROTECTION ASSOCIATION (NFPA)

NFPA 241	(2013) Standard for Safeguarding Construction, Alteration, and Demolition Operations
NFPA 70	(2014; AMD 1 2013; Errata 1 2013; AMD 2 2013; Errata 2 2013) National Electrical Code

U.S. FEDERAL HIGHWAY ADMINISTRATION (FHWA)

MUTCD	(2009) Manual on Uniform Traffic Control Devices

U.S. NATIONAL ARCHIVES AND RECORDS ADMINISTRATION (NARA)

40 CFR 247	Comprehensive Procurement Guideline for Products Containing Recovered Materials

1.2 SUBMITTALS

The use of a "G" following a submittal indicates that a Government approval action is required. Submit the following in accordance with Section 01 33 10.05 20 DESIGN SUBMITTAL PROCEDURES and Section 01 33 00.05 20 CONSTRUCTION SUBMITTAL PROCEDURES.

SD-01 Preconstruction Submittals

Traffic control plan; G

Construction site plan; G

SD-03 Product Data

Backflow preventers

SD-06 Test Reports

Backflow Preventer Tests; G

SD-07 Certificates

Backflow Tester Certification; G

Backflow Preventers Certificate of Full Approval

1.3 EPA LISTED ITEMS USED IN CONDUCT OF THE WORK BUT NOT INCORPORATED IN THE WORK

There are many products listed in 40 CFR 247 which have been designated or proposed by EPA to include recycled or recovered materials that may be used by the Contractor in performing the work but will not be incorporated into the work. These products include office products, temporary traffic control products, and pallets. These non-construction products contain the highest practicable percentage of recycled or recovered materials and can be recycled when no longer needed.

1.4 CONSTRUCTION SITE PLAN

Prior to the start of work, submit a site plan showing the locations of temporary facilities (including layouts and details, equipment and material storage area (onsite and offsite), and access and haul routes used for this contract. Show locations of safety and construction fences, site trailers, construction entrances, trash dumpsters, temporary sanitary facilities, and worker parking areas.

1.5 BACKFLOW PREVENTERS CERTIFICATE

Certificate of Full Approval from FCCCHR List, University of Southern California, attesting that the design, size and make of each backflow preventer has satisfactorily passed the complete sequence of performance testing and evaluation for the respective level of approval. Certificate of Provisional Approval will not be acceptable.

1.5.1 Backflow Prevention Training Certificate

The Contractor shall submit a certificate recognized by the State or local authority that states the Contractor has completed at least 10 hours of training in backflow preventer installations. The certificate must be current.

1.6 TEMPORARY UTILITIES

Reasonable amounts of the following utilities will be made available to the Contractor at the current fiscal year rate. The rates for FY 15 are as follows:

Electricity	$123.38 per MWH
Potable Water	$7.19 per 1,000 gallons
Steam	$34.33 per MBTU

Natural Gas	$1.287 per therm
Sanitary Sewer	$7.18 per 1,000 gallons

The point at which the Government will deliver such utilities or services and the quantity available shall be coordinated with the Contracting Officer. The Contractor shall pay all costs incurred in connecting, converting, and transferring the utilities to the work. The Contractor shall make connections, including providing backflow-preventing devices on connections to domestic water lines; providing meters; and providing transformers; and make disconnections. Under no circumstances will taps to base fire hydrants be allowed for obtaining domestic water.

1.7 BACKFLOW TESTER CERTIFICATION

Prior to testing, submit to the Contracting Officer certification issued by the State or local regulatory agency attesting that the backflow tester has successfully completed a certification course sponsored by the regulatory agency. Tester shall not be affiliated with any company participating in any other phase of this Contract.

1.8 WEATHER PROTECTION

Take necessary precautions to ensure that roof openings and other critical openings in the building are monitored carefully. Take immediate actions required to seal off such openings when rain or other detrimental weather is imminent, and at the end of each workday.

1.8.1 Building and Site Storm Protection

When a warning of gale force winds is issued, take precautions to minimize danger to persons, and protect the work and nearby Government property. Precautions shall include, but are not limited to, closing openings; removing loose materials, tools and equipment from exposed locations; and removing or securing scaffolding and other temporary work. Close openings in the work when storms of lesser intensity pose a threat to the work or any nearby Government property.

1.8.1.1 Condition of Readiness

Unless directed otherwise, comply with:

a. Condition FOUR (Sustained winds of 93 km/hr(58 mph) or greater expected within 72 hours): Normal daily jobsite cleanup and good housekeeping practices. Collect and store in piles or containers all scrap lumber, waste material, and rubbish for removal and disposal at the close of each work day. Maintain the construction site including storage areas, free of accumulation of debris. Stack form lumber in neat piles less than one meter(4 feet) high. Remove all debris, trash, or objects that could become missile hazards. Review requirements pertaining to "Condition THREE" and continue action as necessary to attain "Condition FOUR" readiness. Contact Contracting Officer for Condition of Readiness (COR) updates and completion of required actions.

b. Condition THREE (Sustained winds of 93 km/hr(58 mph) or greater expected within 48 hours): Maintain "Condition FOUR" requirements and commence securing operations necessary for "Condition TWO" readiness. Cease all routine activities which might interfere with securing operations. Commence securing and stow all gear and portable equipment. Make preparations for securing buildings. Reinforce or remove formwork and scaffolding. Secure machinery, tools, equipment, materials, or remove from the jobsite. Expend every effort to clear all missile hazards and loose equipment from general base areas. Contact Contracting Officer for weather and COR updates and completion of required actions.

c. Condition TWO (Sustained winds of 93 km/hr(58 mph) or greater expected within 24 hours): Secure the jobsite, and leave Government premises.

d. Condition ONE (Sustained winds of 93 km/hr(58 mph) or greater expected within 12 hours): Contractor access to the jobsite and Government premises is prohibited.

1.9 STATION OPERATION AFFECT ON CONTRACTOR OPERATIONS

1.9.1 Restricted Access Areas

The Government will monitor work in areas indicated. Notify Contracting Officer at least 14 calendar days prior to starting work in these areas.

1.9.2 Special Restrictions Regarding Access of Vehicles and Parking

1.9.2.1 Interruption of Vehicular Traffic

If during the performance of work, it becomes necessary to modify vehicular traffic patterns at any locations, notify the Contracting Officer at least 15 calendar days prior to the proposed modification date, and provide a Traffic Control Plan detailing the proposed controls to traffic movement for approval. The plan shall be in accordance with State and local regulations and the MUTCD. Make all notifications and obtain any permits required for modification to traffic movements outside Station's jurisdiction. Provide cones, signs, barricades, lights, or other traffic control devices and personnel required to control traffic. Do not use foil-backed material for temporary pavement marking because of its potential to conduct electricity during accidents involving downed power lines.

1.10 STORAGE AREAS

Contractor shall be responsible for security of his property. The Contract Clause entitled "FAR 52.236-10, Operations and Storage Areas" and the following apply:

1.10.1 Storage in Existing Buildings

The Contractor shall be working in and around existing buildings; the storage of material will not be allowed in the buildings. Provide 2.4 m(8 foot) high security fence with a lockable gate around the storage area. Remove at the completion of work.

1.11 TEMPORARY SANITARY FACILITIES

Provide adequate sanitary conveniences of a type approved for the use of persons employed on the work, properly secluded from public observation, and maintained in such a manner as required and approved by the Contracting Officer. Maintain these conveniences at all times without nuisance. Upon completion of the work, remove the conveniences from the premises, leaving the premises clean and free from nuisance. Dispose of sewage through connection to a municipal, district, or station sanitary sewage system. Where such systems are not available, use chemical toilets or comparably effective units, and periodically empty wastes into a municipal, district, or station sanitary sewage system, or remove waste to a commercial facility. Include provisions for pest control and elimination of odors.

Provide temporary sewer and sanitation facilities that are self-contained units with both urinals and stool capabilities. Ventilate the units to control odors and fumes and empty and clean them at least once a week or more often if required by the Contracting Officer. The doors shall be self-closing. The exterior of the unit shall match the base standard color. Locate the facility behind the construction fence or out of the public view.

1.12 TEMPORARY BUILDINGS

Temporary facilities (including trailers) shall be in like new condition and shall be maintained throughout the project. Locate these facilities where directed and within the indicated operations area. Failure to maintain storage trailers or buildings to these standards shall result in the removal of non-complying units at the Contractor's expense. A sign not smaller than 600 by 600 mm (24 by 24 inches) shall be conspicuously placed on the trailer depicting the company name, business phone number, and emergency phone number. Trailers shall be anchored to resist high winds and must meet applicable state of local standards for anchoring mobile trailers. Storage of material/debris under such facilities is prohibited. Contractor shall be responsible for the security of the stored property.

1.12.1 Maintenance of Temporary Facilities

Paint in accordance with base standards and maintain the temporary facilities. Failure to do so will be sufficient reason to require their removal.

1.12.2 Navy Construction Representative's Office

Provide an office with a minimum of 27 square meter (300 square feet) of useful floor area for the exclusive use of Government personnel, in addition to and separate from any other office space provided by the Contractor. Provide a weathertight structure with adequate heating and cooling, toilet facilities, lighting, ventilation, a 1200 by 2400 mm(4 by 8 foot) plan table, computer work space a standard size office desk and chair, and telephone. Provide either a 1,500 watt radiant heater and a window-mounted air conditioner rated at 2.6 kW(9,000 Btus) minimum or a window-mounted heat pump of the same minimum heating and cooling ratings. Include the utilities required to make these items operable. Provide a door with a cylinder lock and windows with locking hardware. Make utility connections. Locate as directed. After completion of the work, remove the entire structure from the site.

1.12.3 Quality Control Manager Records and Field Office

Provide on the jobsite an office with approximately 18 square meter (200 square feet) of useful floor area for the exclusive use of the QC Manager. Provide a weathertight structure with adequate [heating and cooling,] toilet facilities, lighting, ventilation, a 1200 by 2400 mm(4 by 8 foot) plan table, a standard size office desk and chair, computer station, and working communications facilities. Provide either a 1,500 watt radiant heater and a window-mounted air conditioner rated at 2.6 kW (9,000 Btus) minimum or a window-mounted heat pump of the same minimum heating and cooling ratings. Provide a door with a cylinder lock and windows with locking hardware. Make utility connections. Locate as directed. File quality control records in the office and make available at all times to the Government. After completion of the work, remove the entire structure from the site.

2 PART 2 PRODUCTS

2.1 BACKFLOW PREVENTERS

Reduced pressure principle type conforming to the applicable requirements AWWA C511. Provide backflow preventers complete with 65 kg (150 pound) flanged bronze mounted gate valve and strainer, stainless steel or bronze, internal parts. The particular make, model/design, and size of backflow preventers to be installed shall be included in the latest edition of the List of Approved Backflow Prevention Assemblies issued by the FCCCHR List and shall be accompanied by a Certificate of Full Approval from FCCCHR List.

2.2 PROJECT SIGN

Prior to initiating any work on site, provide one project identification sign at the location coordinated with the Contracting Officer. Construct the sign in accordance with project sign detail attached at the end of this section. Maintain sign throughout the life of the project. Upon completion of the project, remove the sign from the site. Provide rendering in accordance with Section 01 33 10.05 20 DESIGN SUBMITTAL PROCEDURES.

PART 3 EXECUTION

3.1 TEMPORARY PHYSICAL CONTROLS

3.1.1 Access Controls

3.1.1.1 Temporary Barricades

Contractor shall provide for barricading around all work areas to prevent public access.

3.1.1.2 Fencing

Fencing shall be provided along the construction site at all open excavations and tunnels to control access by unauthorized people. Fencing must be installed to be able to restrain a force of at least 114.00 kg(250 pounds) against it.

Enclose the project work are and Contractor lay-down area with a 2400 mm(8 ft) high chain link fence and gates with brown, UV light resistant, plastic fabric mesh netting (similar to tennis court or other screening). Remove the fence upon completion and acceptance of the work. Intent is to block (screen) public view of the construction.

In addition, prior to the start of work, enclose those areas at the construction site which are not within the construction fence with a temporary safety fence, including gates and warning signs, to protect the public from construction activities. The safety fence shall match the base standard color (or bright orange where it protects excavated areas), shall be made of plastic fence from recovered materials containing 60-100 percent recovered content level plastic, a minimum of 1100 mm(42 inches) high, supported and tightly secured to steel posts located on minimum 3000 mm(10 foot) centers. Remove the fence from the work site upon completion of the contract.

3.1.1.3 Signs

Place warning signs at the construction area perimeter designating the presence of construction hazards requiring unauthorized persons to keep out. Signs must be placed on all sides of the project, with at least one sign every 90 m(300 feet). All points of entry shall have signs designating the construction site as a hard hat area.

3.1.1.4 Traffic Work

All work around/involving roadways, to include roadway excavations and utility crossings, will be conducted in accordance with Manual of Traffic Control Devices. Contractors shall provide and ensure appropriate road closure and detour signs are established as necessary for motor traffic management. All road closures shall be coordinated with the Contracting Officer in advance. Self-illuminated (lighted) barricades shall be provided during hours of darkness. Brightly-colored (orange) vests are required for all personnel working in roadways. Road closures shall require a road closure plan showing the location of signage.

3.2 TEMPORARY WIRING

Provide temporary wiring in accordance with NFPA 241 and NFPA 70, Assured Equipment Grounding Conductor Program. Program shall include frequent inspection of all equipment and apparatus.

3.3 REDUCED PRESSURE BACKFLOW PREVENTERS

Provide an approved reduced pressure backflow prevention assembly at each location where the Contractor taps into the Government potable water supply.

A certified tester(s) shall perform testing of backflow preventer(s) for proper installation and operation and provide subsequent tagging. Backflow preventer tests shall be performed using test equipment, procedures, and certification forms conforming to those outlined in the latest edition of the Manual of Cross-Connection Control published by the FCCCHR Manual. Test and tag each reduced pressure backflow preventer upon initial installation (prior to continued water use) and monthly thereafter. Tag shall contain the following information: make, model, serial number, dates of tests, results, maintenance performed, and signature of tester. Record test results on certification forms conforming to requirements cited earlier in this paragraph.

]

-- End of Section --

SECTION 01 57 19.00 20

TEMPORARY ENVIRONMENTAL CONTROLS
11/11

PART 1 GENERAL

1.1 REFERENCES

The publications listed below form a part of this specification to the extent referenced. The publications are referred to within the text by the basic designation only.

U.S. ENVIRONMENTAL PROTECTION AGENCY (EPA)

EPA 530/F-93/004	(1993; Rev O; Updates I, II, IIA, IIB, and III) Test Methods for Evaluating Solid Waste (Vol IA, IB, IC, and II) (SW-846)
EPA 833-R-060-04	(2007) Developing Your Storm Water Pollution Prevention Plan, a Guide for Construction Sites

U.S. NATIONAL ARCHIVES AND RECORDS ADMINISTRATION (NARA)

29 CFR 1910	Occupational Safety and Health Standards
29 CFR 1910.120	Hazardous Waste Operations and Emergency Response
40 CFR 112	Oil Pollution Prevention
40 CFR 112.7	General Requirements for Spill Prevention, Control, and Countermeasure Plans
40 CFR 122.26	Storm Water Discharges (Applicable to State NPDES Programs, see section 123.25)
40 CFR 241	Guidelines for Disposal of Solid Waste
40 CFR 243	Guidelines for the Storage and Collection of Residential, Commercial, and Institutional Solid Waste
40 CFR 258	Subtitle D Landfill Requirements
40 CFR 260	Hazardous Waste Management System: General
40 CFR 261	Identification and Listing of Hazardous Waste
40 CFR 262	Standards Applicable to Generators of Hazardous Waste
40 CFR 263	Standards Applicable to Transporters of Hazardous Waste
40 CFR 264	Standards for Owners and Operators of Hazardous Waste Treatment, Storage, and Disposal Facilities
40 CFR 265	Interim Status Standards for Owners and Operators of Hazardous Waste Treatment, Storage, and Disposal Facilities

40 CFR 266	Standards for the Management of Specific Hazardous Wastes and Specific Types of Hazardous Waste Management Facilities
40 CFR 268	Land Disposal Restrictions
40 CFR 270	EPA Administered Permit Programs: The Hazardous Waste Permit Program
40 CFR 271	Requirements for Authorization of State Hazardous Waste Programs
40 CFR 272	Approved State Hazardous Waste Management Programs
40 CFR 273	Standards For Universal Waste Management
40 CFR 279	Standards for the Management of Used Oil
40 CFR 280	Technical Standards and Corrective Action Requirements for Owners and Operators of Underground Storage Tanks (UST)
40 CFR 300	National Oil and Hazardous Substances Pollution Contingency Plan
40 CFR 355	Emergency Planning and Notification
40 CFR 372-SUBPART D	Specific Toxic Chemical Listings
40 CFR 60	Standards of Performance for New Stationary Sources
40 CFR 63	National Emission Standards for Hazardous Air Pollutants for Source Categories
40 CFR 761	Polychlorinated Biphenyls (PCBs) Manufacturing, Processing, Distribution in Commerce, and Use Prohibitions
40 CFR 82	Protection of Stratospheric Ozone
49 CFR 171	General Information, Regulations, and Definitions
49 CFR 172	Hazardous Materials Table, Special Provisions, Hazardous Materials Communications, Emergency Response Information, and Training Requirements
49 CFR 173	Shippers - General Requirements for Shipments and Packagings
49 CFR 178	Specifications for Packagings

1.2 DEFINITIONS

1.2.1 Sediment

Soil and other debris that have eroded and have been transported by runoff water or wind.

1.2.2 Solid Waste

Garbage, refuse, debris, sludge, or other discharged material, including solid, liquid, semisolid, or contained gaseous materials resulting from domestic, industrial, commercial, mining, or agricultural operations. Types of solid waste typically generated at construction sites may include:

a. Green waste: The vegetative matter from landscaping, land clearing and grubbing, including, but not limited to, grass, bushes, scrubs, small trees and saplings, tree stumps and plant roots. Marketable trees, grasses and plants that are indicated to remain, be re-located, or be re-used are not included.

b. Surplus soil: Existing soil that is in excess of what is required for this work, including aggregates intended, but not used, for on-site mixing of concrete, mortars and paving. Contaminated soil meeting the definition of hazardous material or hazardous waste is not included.

c. Debris: Non-hazardous solid material generated during the construction, demolition, or renovation of a structure which exceeds 60 mm(2.5 inch) particle size that is: a manufactured object; plant or animal matter; or natural geologic material (e.g. cobbles and boulders), broken or removed concrete, masonry, and rock asphalt paving; ceramics; roofing paper and shingles. Inert materials [may] [may not] be reinforced with or contain ferrous wire, rods, accessories and weldments. A mixture of debris and other material such as soil or sludge is also subject to regulation as debris if the mixture is comprised primarily of debris by volume, based on visual inspection.

d. Wood: Dimension and non-dimension lumber, plywood, chipboard, hardboard. Treated and/or painted wood that meets the definition of lead contaminated or lead based contaminated paint is not included.

e. Scrap metal: Scrap and excess ferrous and non-ferrous metals such as reinforcing steel, structural shapes, pipe and wire that are recovered or collected and disposed of as scrap. Scrap metal meeting the definition of hazardous material or hazardous waste is not included.

f. Paint cans: Metal cans that are empty of paints, solvents, thinners and adhesives. If permitted by the paint can label, a thin dry film may remain in the can.

g. Recyclables: Materials, equipment and assemblies such as doors, windows, door and window frames, plumbing fixtures, glazing and mirrors that are recovered and sold as recyclable. Metal meeting the definition of lead contaminated or lead based paint contaminated [may] [may not] be included as recyclable if sold to a scrap metal company. Paint cans [may] [may not] be included as recyclable if sold to a scrap metal company.

h. Hazardous Waste: By definition, to be a hazardous waste a material must first meet the definition of a solid waste. Hazardous waste and hazardous debris are special cases of solid waste. They have additional regulatory controls and must be handled separately. They are thus defined separately in this document.

Material not regulated as solid waste are: nuclear source or byproduct materials regulated under the Federal Atomic Energy Act of 1954 as amended; suspended or dissolved materials in domestic sewage effluent or irrigation return flows, or other regulated point source discharges; regulated air emissions; and fluids or wastes associated with natural gas or crude oil exploration or production.

1.2.3 Hazardous Debris

As defined in Solid Waste paragraph, debris that contains listed hazardous waste (either on the debris surface, or in its interstices, such as pore structure) per 40 CFR 261; or debris that exhibits a characteristic of hazardous waste per 40 CFR 261.

1.2.4 Chemical Wastes

This includes salts, acids, alkalizes, herbicides, pesticides, and organic chemicals.

1.2.5 Garbage

Refuse and scraps resulting from preparation, cooking, dispensing, and consumption of food.

1.2.6 Hazardous Waste

Any discarded material, liquid, solid, or gas, which meets the definition of hazardous material or is designated hazardous waste by the Environmental Protection Agency or State Hazardous Control Authority as defined in 40 CFR 260, 40 CFR 261, 40 CFR 262, 40 CFR 263, 40 CFR 264, 40 CFR 265, 40 CFR 266, 40 CFR 268, 40 CFR 270, 40 CFR 271, 40 CFR 272, 40 CFR 273, 40 CFR 279, and 40 CFR 280.

1.2.7 Hazardous Materials

Hazardous materials as defined in 49 CFR 171 and listed in 49 CFR 172.

Hazardous material is any material that:

a. Is regulated as a hazardous material per 49 CFR 173, or

b. Requires a Material Safety Data Sheet (MSDS) per 29 CFR 1910.120, or

c. During end use, treatment, handling, packaging, storage, transpiration, or disposal meets or has components that meet or have potential to meet the definition of a hazardous waste as defined by 40 CFR 261 Subparts A, B, C, or D.

Designation of a material by this definition, when separately regulated or controlled by other instructions or directives, does not eliminate the need for adherence to that hazard-specific guidance which takes precedence over this instruction for "control" purposes. Such material include ammunition, weapons, explosive actuated devices, propellants, pyrotechnics, chemical and biological warfare materials, medical and pharmaceutical supplies, medical waste and infectious materials, bulk fuels, radioactive materials, and other materials such as asbestos, mercury, and polychlorinated biphenyls (PCBs). Nonetheless, the exposure may occur incident to manufacture, storage, use and demilitarization of these items.

1.2.8 Waste Hazardous Material (WHM)

Any waste material which because of its quantity, concentration, or physical, chemical, or infectious characteristics may pose a substantial hazard to human health or the environment and which has been so designated. Used oil not containing any hazardous waste, as defined above, falls under this definition.

1.2.9 Oily Waste

Those materials which are, or were, mixed with used oil and have become separated from that used oil. Oily wastes also means materials, including wastewaters, centrifuge solids, filter residues or sludges, bottom sediments, tank bottoms, and sorbents which have come into contact with and have been contaminated by, used oil and may be appropriately tested and discarded in a manner which is in compliance with other State and local requirements.

This definition includes materials such as oily rags, "kitty litter" sorbent clay and organic sorbent material. These materials may be land filled provided that:

a. It is not prohibited in other State regulations or local ordinances

b. The amount generated is "de minimus" (a small amount)

c. It is the result of minor leaks or spills resulting from normal process operations

d. All free-flowing oil has been removed to the practical extent possible

Large quantities of this material, generated as a result of a major spill or in lieu of proper maintenance of the processing equipment, are a solid waste. As a solid waste, a hazardous waste determination must be performed prior to disposal. As this can be an expensive process, it is recommended that this type of waste be minimized through good housekeeping practices and employee education.

1.2.10 Regulated Waste

Those solid wastes that have specific additional Federal, state, or local controls for handling, storage, or disposal.

1.2.11 Class I and II Ozone Depleting Substance (ODS)

Class I ODS is defined in Section 602(a) of The Clean Air Act and includes the following chemicals:

chlorofluorocarbon-11 (CFC-11)
chlorofluorocarbon-12 (CFC-12)
chlorofluorocarbon-13 (CFC-13)
chlorofluorocarbon-111 (CFC-111)
chlorofluorocarbon-112 (CFC-112)
chlorofluorocarbon-113 (CFC-113)
chlorofluorocarbon-114 (CFC-114)
chlorofluorocarbon-115 (CFC-115)
chlorofluorocarbon-211 (CFC-211)
chlorofluorocarbon-212 (CFC-212)

chlorofluorocarbon-213 (CFC-213)
chlorofluorocarbon-214 (CFC-214)
chlorofluorocarbon-215 (CFC-215)
chlorofluorocarbon-216 (CFC-216)
chlorofluorocarbon-217 (CFC-217)
chlorofluorocarbon-500 (CFC-500)
chlorofluorocarbon-502 (CFC-502)
chlorofluorocarbon-503 (CFC-503)
halon-1211
halon-1301
halon-2402
carbon tetrachloride
methyl bromide
methyl chloroform

Class II ODS is defined in Section 602(s) of The Clean Air Act and includes the following chemicals:

hydrochlorofluorocarbon-21 (HCFC-21)
hydrochlorofluorocarbon-22 (HCFC-22)
hydrochlorofluorocarbon-31 (HCFC-31)
hydrochlorofluorocarbon-121 (HCFC-121)
hydrochlorofluorocarbon-122 (HCFC-122)
hydrochlorofluorocarbon-123 (HCFC-123)
hydrochlorofluorocarbon-124 (HCFC-124)
hydrochlorofluorocarbon-131 (HCFC-131)
hydrochlorofluorocarbon-132 (HCFC-132)
hydrochlorofluorocarbon-133 (HCFC-133)
hydrochlorofluorocarbon-141 (HCFC-141)

hydrochlorofluorocarbon-142 (HCFC-142)
hydrochlorofluorocarbon-221 (HCFC-221)
hydrochlorofluorocarbon-222 (HCFC-222)
hydrochlorofluorocarbon-223 (HCFC-223)
hydrochlorofluorocarbon-224 (HCFC-224)
hydrochlorofluorocarbon-225 (HCFC-225)
hydrochlorofluorocarbon-226 (HCFC-226)
hydrochlorofluorocarbon-231 (HCFC-231)
hydrochlorofluorocarbon-232 (HCFC-232)
hydrochlorofluorocarbon-233 (HCFC-233)
hydrochlorofluorocarbon-234 (HCFC-234)
hydrochlorofluorocarbon-235 (HCFC-235)
hydrochlorofluorocarbon-251 (HCFC-251)
hydrochlorofluorocarbon-252 (HCFC-252)
hydrochlorofluorocarbon-253 (HCFC-253)
hydrochlorofluorocarbon-261 (HCFC-261)
hydrochlorofluorocarbon-262 (HCFC-262)
hydrochlorofluorocarbon-271 (HCFC-271)

1.2.12 Universal Waste

The universal waste regulations streamline collection requirements for certain hazardous wastes in the following categories: batteries, pesticides, mercury-containing equipment (e.g., thermostats) and lamps (e.g., fluorescent bulbs). The rule is designed to reduce hazardous waste in the municipal solid waste (MSW) stream by making it easier for universal waste handlers to collect these items and send them for recycling or proper disposal. These regulations can be found at 40 CFR 273.

1.3 SUBMITTALS

Government approval is required for submittals with a "G" designation; submittals not having a "G" designation are for Contractor Quality Control approval. The following shall be submitted in accordance with Section 01 33 10.05 20 DESIGN SUBMITTAL PROCEDURES:

SD-01 Preconstruction Submittals

Preconstruction Survey; G

Solid Waste Management Plan and Permit; G

Regulatory Notifications; G

Environmental Protection Plan; G

Storm Water Pollution Prevention Plan; G

Storm Water Notice of Intent (for NPDES coverage under the general permit for construction activities) ; G

Dirt and Dust Control Plan

Contractor Hazardous Material Inventory Log; G

SD-06 Test Reports

Laboratory Analysis

Disposal Requirements

Erosion and Sediment Control Inspection Reports

Storm Water Inspection Reports for General Permit

Solid Waste Management Report; G

SD-11 Closeout Submittals

Some of the records listed below are also required as part of other submittals. For the "Records" submittal, maintain on-site a separate three-ring Environmental Records binder and submit at the completion of the project. Make separate parts to the binder corresponding to each of the applicable sub items listed below.

Storm Water Pollution Prevention Plan compliance notebook; G

Waste Determination Documentation

Disposal Documentation for Hazardous and Regulated Waste

Contractor 40 CFR Employee Training Records

Solid Waste Management Permit

Solid Waste Management Report

Contractor Hazardous Material Inventory Log; G

Hazardous Waste/Debris Management

Regulatory Notifications

1.4 ENVIRONMENTAL PROTECTION REQUIREMENTS

Provide and maintain, during the life of the contract, environmental protection as defined. Plan for and provide environmental protective measures to control pollution that develops during normal construction practice. Plan for and provide environmental protective measures required to correct conditions that develop during the construction of permanent or temporary environmental features associated with the project. Comply with Federal, State, and local regulations pertaining to the environment, including water, air, solid waste, hazardous waste and substances, oily substances, and noise pollution.

The Contractor may be required to promptly conduct tests and procedures for the purpose of assessing whether construction operations are in compliance with Applicable Environmental Laws. Analytical work shall be done by qualified laboratories; and where required by law, the laboratories shall be certified.

1.4.1 Environmental Compliance Assessment Training and Tracking System (ECATTS)

The QC Manager is responsible for environmental compliance on projects unless an Environmental Manager is named. The QC Manager (and alternative QC Manager) or Environmental Manager must complete ECATTS training prior to starting respective portions of on-site work under this contract. If personnel changes occur for any of these positions after starting work, replacement personnel must complete ECATTS training within 14 days of assignment to the project

Submit an ECATTS certificate of completion for personnel who have completed the required "Environmental Compliance Assessment Training and Tracking System (ECATTS)" training. This training is web-based and can be accessed from any computer with Internet access using the following instructions.

Register for NAVFAC Environmental Compliance Training and Tracking System, by logging on to <URL>http://navfac.ecatts.com/</URL>. Obtain the password for registration from the Contracting Officer.

This training has been structured to allow contractor personnel to receive credit under this contract and also to carry forward credit to future contracts. Contractors shall ensure that the QC Manager (and alternate QC Manager) or Environmental Manager review their training plans for new modules or updated training requirements prior to beginning work. Some training modules are tailored for specific State regulatory requirements; therefore, Contractors working in multiple states will be requires to re-take modules tailored to the state where the contract work is being performed.

ECATTS is available for use by all contractor and subcontractor personnel associated with this project. These other personnel are encouraged (but not required) to take the training and may do so at their discretion.

1.4.2 Conformance with the Environmental Management System

Perform work under this contract consistent with the policy and objectives identified in the installation's Environmental Management System (EMS). Perform work in a manner that conforms to objectives and targets, environmental programs and operational controls identified by the EMS. Provide monitoring and measurement information as necessary to address environmental performance relative to environmental, energy, and transportation management goals. In the event an EMS nonconformance or environmental noncompliance associated with the contracted services, tasks, or actions occurs, take corrective and/or preventative actions. In addition, ensure that employees are aware of their roles and responsibilities under the EMS and how these EMS roles and responsibilities affect work performed under the contract.

Ensure that employees receive applicable environmental and occupational health and safety training, and keep up to date on regulatory required specific training for the type of work to be conducted onsite. All on-site Contractor personnel, and their subcontractor personnel, performing tasks that have the potential to cause a significant environmental impact shall be competent on the basis of appropriate education, training or experience. Upon contract award, the Contracting Officer's Representative will notify the installation's EMS coordinator to arrange EMS training. Refer to Section 01 57 19.01 20, SUPPLEMENTAL TEMPORARY ENVIRONMENTAL CONTROLS for additional site specific EMS requirements related to construction. The installation's EMS coordinator will identify training needs associated with environmental aspects and the EMS, and arrange training or take other action to meet these needs. Provide training documentation to the Contracting Officer. The EMS coordinator must retain associated records.

1.5 QUALITY ASSURANCE

1.5.1 Preconstruction Survey

Perform a Preconstruction Survey of the project site with the Contracting Officer, and take photographs showing existing environmental conditions in and adjacent to the site. Submit a report for the record.

1.5.2 Regulatory Notifications

The Contractor is responsible for all regulatory notification requirements in accordance with Federal, State and local regulations. In cases where the Navy must also provide public notification (such as stormwater permitting), coordinate with the Contracting Officer. Submit copies of all regulatory notifications to the Contracting Officer prior to commencement of work activities. Typically, regulatory notifications must be provided for the following (this listing is not all inclusive): demolition, renovation, NPDES defined site work, remediation of controlled substances (asbestos, hazardous waste, lead paint).

1.5.3 Environmental Brief

Attend an environmental brief to be included in the preconstruction meeting. Provide the following information: types, quantities, and use of hazardous materials that will be brought onto the activity; types and quantities of wastes/wastewater that may be generated during the contract. Discuss the results of the Preconstruction Survey at this time.

Prior to initiating any work on site, meet with the Contracting Officer and activity environmental staff to discuss the proposed Environmental Protection Plan. Develop a mutual understanding relative to the details of environmental protection, including measures for protecting natural resources, required reports, required permits, permit requirements, and other measures to be taken.

1.5.4 Environmental Manager

Appoint in writing an Environmental Manager for the project site. The Environmental Manager will be directly responsible for coordinating contractor compliance with Federal, State, local, and station requirements. The Environmental Manager will ensure compliance with Hazardous Waste Program requirements (including hazardous waste handling, storage, manifesting, and disposal); implement the Environmental Protection Plan; ensure that all environmental permits are obtained, maintained, and closed out; ensure compliance with Storm Water Program Management requirements; ensure compliance with Hazardous Materials (storage, handling, and reporting) requirements; and coordinate any remediation of regulated substances (lead, asbestos, PCB transformers). This can be a collateral position; however the person in this position must be trained to adequately accomplish the following duties: ensure waste segregation and storage compatibility requirements are met; inspect and manage Satellite Accumulation areas; ensure only authorized personnel add wastes to containers; ensure all Contractor personnel are trained in 40 CFR requirements in accordance with their position

requirements; coordinate removal of waste containers; and maintain the Environmental Records binder and required documentation, including environmental permits compliance and close-out.

1.5.5 Contractor 40 CFR Employee Training Records

Prepare and maintain employee training records throughout the term of the contract meeting applicable 40 CFR requirements. Ensure every employee completes a program of classroom instruction or on-the-job training that teaches them to perform their duties in a way that ensures compliance with Federal, State and local regulatory requirements for RCRA Large Quantity Generator. Provide a Position Description for each employee, by subcontractor, based on the Davis-Bacon Wage Rate designation or other equivalent method, evaluating the employee's association with hazardous and regulated wastes. This Position Description will include training requirements as defined in 40 CFR 265 for a Large Quantity Generator facility. Submit these training records to the Contracting Officer at the conclusion of the project, unless otherwise directed.

1.6 ENVIRONMENTAL PROTECTION PLAN (EPP)

Prior to initiating any work on site, meet with the Contracting Officer to discuss the proposed Environmental Protection Plan and develop a mutual understanding relative to the details of environmental protection, including measures for protecting natural resources, required reports, and other measures to be taken. The Environmental Protection Plan must incorporate construction related objectives and targets from the installation's Environmental Management System. Submit the Environmental Protection Plan in the following format and include the elements specified below.

a. Description of the Environmental Protection Plan

(1) General overview and purpose

(a) A brief description of each specific plan required by environmental permit or elsewhere in this contract.

(b) The duties and level of authority assigned to the person(s) on the job site that oversee environmental compliance.

(c) A copy of any standard or project specific operating procedures that will be used to effectively manage and protect the environment on the project site.

(d) Communication and training procedures that will be used to convey environmental management requirements to contractor employees and subcontractors.

(e) Emergency contact information contact information (office phone number, cell phone number, and e-mail address).

(2) General site information

(3) A letter signed by an officer of the firm appointing the Environmental Manager and stating that he/she is responsible for managing and implementing the Environmental Program as described in this contract. Include in this letter the Environmental Manager's authority to direct the removal and replacement of non-conforming work.

b. Management of Natural Resources

(1) Land resources

(2) Tree protection

(3) Replacement of damaged landscape features

(4) Temporary construction

(5) Stream crossings

(6) Fish and wildlife resources

(7) Wetland areas

c. Protection of Historical and Archaeological Resources

(1) Objectives

(2) Methods

d. Storm Water Management and Control

(1) Ground cover

(2) Erodible soils

(3) Temporary measures

(a) Mechanical retardation and control of runoff

(b) Vegetation and mulch

(4) Effective selection, implementation and maintenance of Best Management Practices (BMPs).

e. Protection of the Environment from Waste Derived from Contractor Operations

(1) Control and disposal of solid and sanitary waste. If Section 01 74 19 CONSTRUCTION AND DEMOLITION WASTE MANAGEMENT is included in the contract, submit the plan required by that section as part of the Environmental Protection Plan.

(2) Control and disposal of hazardous waste (Hazardous Waste Management Section)

This item will consist of the management procedures for all hazardous waste to be generated. The elements of those procedures will coincide with the Activity Hazardous Waste Management Plan. A copy of the Activity Hazardous Waste Management Plan will be provided by the Contracting Officer. As a minimum, include the following:

(a) Procedures to be employed to ensure a written waste determination is made for appropriate wastes which are to be generated;

(b) Sampling/analysis plan;

(c) Methods of hazardous waste accumulation/storage (i.e., in tanks and/or containers);

(d) Management procedures for storage, labeling, transportation, and disposal of waste (treatment of waste is not allowed unless specifically noted);

(e) Management procedures and regulatory documentation ensuring disposal of hazardous waste complies with Land Disposal Restrictions (40 CFR 268);

(f) Management procedures for recyclable hazardous materials such as lead-acid batteries, used oil, and the like;

(g) Used oil management procedures in accordance with 40 CFR 279;

(h) Pollution prevention\hazardous waste minimization procedures;

(i) Plans for the disposal of hazardous waste by permitted facilities;

(j) Procedures to be employed to ensure all required employee training records are maintained.

f. Prevention of Releases to the Environment

(1) Procedures to prevent releases to the environment

(2) Notifications in the event of a release to the environment

g. Regulatory Notification and Permits

List what notifications and permit applications must be made. Some permits require up to 90 days to obtain. Demonstrate that those permits have been obtained or applied for by including copies of all applicable, environmental permits. The Plan will not be approved until all permits have been obtained.

h. Clean Air Act Compliance

(1) Identify air pollution generating equipment or processes that may require federal, state, or local permits under the clean air act.

(2) Identify portable and stationary internal combustion engines (ICE's) that will be supplied, utilized or serviced. Address compliance with 40 CFR 60 Subpart IIII, 40 CFR 63 Subpart ZZZZ, and local regulations as applicable. At minimum, include the make, model, serial number, manufacture date, size (engine bhp), and EPA emission certification status of each engine.

(3) Identify management practices to ensure that HVAC work involving refrigerants complies with 40 CFR 82 requirements.

(4) Identify planned air pollution generating processes and management control measures (including but not limited to spray painting, abrasive blasting, demolition, material handling, fugitive dust, and fugitive emissions)

1.6.1 Environmental Protection Plan Review

Within thirty days after the Contract award date, submit the proposed Environmental Protection Plan for review and approval. Commencement of work will not begin until the environmental protection plan has been approved.

1.6.2 Licenses and Permits

Obtain licenses and permits pursuant to the "Permits and Responsibilities" FAR Clause 52.236-7.

No permits will be obtained by the Contracting Officer.

Where required by the State regulatory authority, the inspections and certifications will be provided through the services of a Professional Engineer (PE), registered in the State where the work is being performed. As a part of the quality control plan, which is required by Section 01 45 00.00 20 QUALITY CONTROL, provide a sub item containing the name, appropriate professional registration or license number, address, and telephone number of the professionals or other qualified persons who will be performing the inspections and certifications for each permit.

PART 2 PRODUCTS

Not Used

PART 3 EXECUTION

3.1 PROTECTION OF NATURAL RESOURCES

Preserve the natural resources within the project boundaries and outside the limits of permanent work. Restore to an equivalent or improved condition upon completion of work. Confine construction activities to within the limits of the work indicated or specified. If the work is near streams, lakes, or other waterways, conform to the national permitting requirements of the Clean Water Act.

Do not disturb fish and wildlife. Do not alter water flows or otherwise significantly disturb the native habitat adjacent to the project and critical to the survival of fish and wildlife, except as indicated or specified.

Except in areas to be cleared, do not remove, cut, deface, injure, or destroy trees or shrubs without the Contracting Officer's permission. Do not fasten or attach ropes, cables, or guys to existing nearby trees for anchorages unless authorized by the Contracting Officer. Where such use of attached ropes, cables, or guys is authorized, the Contractor will be responsible for any resultant damage.

Protect existing trees which are to remain and which may be injured, bruised, defaced, or otherwise damaged by construction operations. Remove displaced rocks from uncleared areas. By approved excavation, remove trees with 30 percent or more of their root systems destroyed. Remove trees and other landscape features scarred or damaged by equipment operations, and replace with equivalent, undamaged trees and landscape features. Obtain Contracting Officer's approval before replacement.

The Contracting Officer's approval is required before any equipment will be permitted to ford live streams. In areas where frequent crossings are required, install temporary culverts or bridges. Obtain Contracting Officer's approval prior to installation. Remove temporary culverts or bridges upon completion of work, and repair the area to its original condition unless otherwise required by the Contracting Officer.

3.1.1 Erosion and Sediment Control Measures

3.1.1.1 Burnoff

Burnoff of the ground cover is not permitted.

3.1.1.2 Protection of Erodible Soils

Immediately finish the earthwork brought to a final grade, as indicated or specified. Immediately protect the side slopes and back slopes upon completion of rough grading. Plan and conduct earthwork to minimize the duration of exposure of unprotected soils.

3.1.1.3 Temporary Protection of Erodible Soils

Use the following methods to prevent erosion and control sedimentation:

a. Mechanical Retardation and Control of Runoff

Mechanically retard and control the rate of runoff from the construction site. This includes construction of diversion ditches, benches, berms, and use of silt fences and straw bales to retard and divert runoff to protected drainage courses.

b. Sediment Basins

(1) Trap sediment in temporary sediment basins. Select a basin size to accommodate the runoff of a local 50-year storm. Pump dry and remove the accumulated sediment, after each storm. Use a paved weir or vertical overflow pipe for overflow. Remove collected sediment from the site. Institute effluent quality monitoring programs.

(2) Install, inspect, and maintain best management practices (BMPs) as required by the general permit. Prepare BMP Inspection Reports as required by the general permit. If required by the permit, include those inspection reports.

c. Vegetation and Mulch

(1) Provide temporary protection on sides and back slopes as soon as rough grading is completed or sufficient soil is exposed to require erosion protection. Protect slopes by accelerated growth of permanent vegetation, temporary vegetation, mulching, or netting. Stabilize slopes by hydroseeding, anchoring mulch in place, covering with anchored netting, sodding, or such combination of these and other methods necessary for effective erosion control.

(2) Seeding: Provide new seeding where ground is disturbed. Include topsoil or nutriment during the seeding operation necessary to establish or reestablish a suitable stand of grass.

3.1.2 Erosion and Sediment Control Inspection Reports

Submit "Erosion and Sediment Control Inspection Reports" (E&S) (form provided at the pre-construction conference) and Storm Water Inspection Reports for General Permit for General Permit to the Contracting Officer once every 7 calendar days and within 24 hours of a storm event that produces 12 mm(0.5 inch) or more of rain.

Note erosion control inspection reports may be compiled as part of a stormwater pollution prevention plan inspection reports if applicable.

3.1.2.1 Storm Water Notice of Intent for Construction Activities and Storm Water Pollution Prevention Plan

Submit a Storm Water Notice of Intent (for NPDES coverage under the general permit for construction activities) and a Storm Water Pollution Prevention Plan (SWPPP) for the project to the Contracting Officer prior and gain approval prior to the commencement of work. The SWPPP must meet the requirements of the EPA or State general permit for storm water discharges from construction sites. Submit the SWPPP along with any required Notice of Intents, Notice of Termination, and appropriate permit fees, via the Contracting Officer, to the appropriate Federal or State agency for approval, a minimum of 45 calendar days prior to the start of any land disturbing activities. Maintain an approved copy of the SWPPP at the construction on-site office, and continually update as regulations require,

reflecting current site conditions. Additional requirements may be found in UFGS Section 01 57 19.01 20, SUPPLEMENTAL TEMPORARY ENVIRONMENTAL CONTROLS.

Coverage under this permit requires the contractor prepare a Storm Water Pollution Prevention Plan (SWPPP), prepare and submit a Registration Statement as a co-permittee with the Construction Officer, and provide the permit fee to the responsible state agency before any land disturbing activities begin. File for permit coverage on behalf of both the Construction Officer and themself, and file a Notice of Termination once construction is complete and the site is stabilized with a final sustainable cover.

Under the terms and conditions of the permit, the Contractor may be required to install, inspect, maintain best management practices (BMPs), and submit stormwater BMP inspection reports and stormwater pollution prevention plan inspection reports. Ensure construction operations and management are constantly in compliance with the terms and conditions of the general permit for storm water discharges from construction activities.

a. The SWPPP shall:

(1) Identify potential sources of pollution which may be reasonably expected to affect the quality of storm water discharge from the site.

(2) Describe and ensure implementation of practices which will be used to reduce the pollutants in storm water discharge from the site.

(3) Ensure compliance with terms of the EPA or State general permit for storm water discharge.

(4) Select applicable best management practices from EPA 833-R-060-04.

(5) Include a completed copy of the Registration Statement, BMP Inspection Report Template and Notice of Termination except for the effective date.

(6) Storm Water Pollution Prevention Measures and Notice of Intent 40 CFR 122.26, EPA 833-R-060-04. Provide a "Storm Water Pollution Prevention Plan" (SWPPP) for the project. The SWPPP will meet the requirements of the EPA or State general permit for storm water discharges from construction sites. Submit the SWPPP along with any required Notice of Intents, Notice of Termination, and appropriate permit fees, via the Contracting Officer, to the appropriate Federal or State agency for approval, a minimum of 14 calendar days prior to the start of construction. A copy of the approved SWPPP will be kept at the construction on-site office, and continually updated as regulations require reflecting current site conditions.

3.1.2.2 Storm Water Pollution Prevention Plan Compliance Notebook

Create and maintain a three ring binder of documents that demonstrate compliance with the Stormwater Construction Activity permit. The binder shall include a copy of the permit Registration Statement, proof of permit fee payment, SWPPP and SWPPP update amendments, inspection reports, copies of correspondence with the Illinois EPA and DNR and a copy of the permit Notice of Termination. At the completion of the project the notebook shall become the property of the Government. Provide the compliance notebook to Contracting Officer. Provide an advance copy of the Registration Statement to the Contracting Officer immediately after the form is presented to the permitting agency.

3.1.3 Stormwater Drainage and Construction Dewatering

There will be no discharge of excavation ground water to the sanitary sewer, storm drains, or to the river without prior specific authorization of the Environmental Division in writing. Discharge of hazardous substances will not be permitted under any circumstances.

Construction site runoff will be prevented from entering any storm drain or the river directly by the use of straw bales or other method suitable to the Environmental Division. Contractor will provide erosion protection of the surrounding soils.

Construction Dewatering shall not be discharged to the sanitary sewer. If the construction dewatering is noted or suspected of being contaminated, it may only be released to the storm drain system if the discharge is specifically permitted. Authorization for any contaminated groundwater release shall be obtained in advance from the base Environmental Officer. Discharge of hazardous substances will not be permitted under any circumstances.

3.2 HISTORICAL AND ARCHAEOLOGICAL RESOURCES

Carefully protect in-place and report immediately to the Contracting Officer historical and archaeological items or human skeletal remains discovered in the course of work. Upon discovery, notify the Contracting Officer. Stop work in the immediate area of the discovery until directed by the Contracting Officer to resume work. The Government retains ownership and control over historical and archaeological resources.

3.3 SOLID WASTE MANAGEMENT PLAN AND PERMIT

Provide to the contracting officer written notification of the quantity of solid waste/debris that is anticipated to be generated by construction. Include in the report the locations where various types of waste will be disposed or recycled. Include letters of acceptance or as applicable, submit one copy of a State and local Solid Waste Management Permit or license showing such agency's approval of the disposal plan before transporting wastes off Government property.

3.3.1 Solid Waste Management Report

Monthly, submit a solid waste disposal report to the Contracting Officer. For each waste, the report will state the classification (using the definitions provided in this section), amount, location, and name of the business receiving the solid waste.

Include copies of the waste handling facilities' weight tickets, receipts, bills of sale, and other sales documentation. In lieu of sales documentation, the Contractor may submit a statement indicating the disposal location for the solid waste which is signed by an officer of the Contractor firm authorized to legally obligate or bind the firm. The sales documentation or Contractor certification will include the receiver's tax identification number and business, EPA or State registration number, along with the receiver's delivery and business addresses and telephone numbers. For each solid waste retained by the Contractor for his own use, the Contractor will submit on the solid waste disposal report the information previously described in this paragraph. Prices paid or received will not be reported to the Contracting Officer unless required by other provisions or specifications of this Contract or public law.

3.3.2 Control and Management of Solid Wastes

Pick up solid wastes, and place in covered containers which are regularly emptied. Do not prepare or cook food on the project site. Prevent contamination of the site or other areas when handling and disposing of wastes. At project completion, leave the areas clean. Recycling is encouraged and can be coordinated with the Contracting Officer and the activity recycling coordinator. Remove all solid waste (including non-hazardous debris) from Government property and dispose off-site at an approved

landfill. Solid waste disposal off-site must comply with most stringent local, State, and Federal requirements including 40 CFR 241, 40 CFR 243, and 40 CFR 258.

Manage spent hazardous material used in construction, including but not limited to, aerosol cans, waste paint, cleaning solvents, contaminated brushes, and used rags, as per environmental law.

3.3.2.1 Disposal Documentation for Hazardous and Regulated Waste

Manifest, pack, ship and dispose of hazardous or toxic waste and universal waste that is generated as a result of construction in accordance with the generating facilities generator status under the Recourse Conservation and Recovery Act. Contact the Contracting Officer for the facility RCRA identification number that is to be used on each manifest.

Submit a copy of the applicable EPA and or State permit(s), manifest(s), or license(s) for transportation, treatment, storage, and disposal of hazardous and regulated waste by permitted facilities. Hazardous or toxic waste manifest must be reviewed, signed, and approved by the Navy before the Contractor may ship waste. To obtain specific disposal instructions coordinate with the Activity Environmental office. Refer to Section 01 57 19.01 20 SUPPLEMENTAL TEMPORARY ENVIRONMENTAL CONTROLS for the Activity Point of Contact information.

3.3.2.2 Dumpsters

Equip dumpsters with a secure cover and paint the standard base color. Keep cover closed at all times, except when being loaded with trash and debris. Locate dumpsters behind the construction fence or out of the public view. Empty site dumpsters at least once a week. or as needed to keep the site free of debris and trash. If necessary, provide 208 liter(55 gallon) trash containers painted the darker base color to collect debris in the construction site area. Locate the trash containers behind the construction fence or out of the public view. Empty trash containers at least once a day. For large demolitions, large dumpsters without lids are acceptable but should not have debris higher than the sides before emptying.

3.4 WASTE DETERMINATION DOCUMENTATION

Complete a Waste Determination form (provided at the pre-construction conference) for all contractor derived wastes to be generated. Base the waste determination upon either a constituent listing from the manufacturer used in conjunction with consideration of the process by which the waste was generated, EPA approved analytical data, or laboratory analysis (Material Safety Data Sheets (MSDS) by themselves are not adequate). Attach all support documentation to the Waste Determination form. As a minimum, a Waste Determination form must be provided for the following wastes (this listing is not all inclusive): oil and latex based painting and caulking products, solvents, adhesives, aerosols, petroleum products, and all containers of the original materials.

3.5 POLLUTION PREVENTION/HAZARDOUS WASTE MINIMIZATION

Minimize the use of hazardous materials and the generation of hazardous waste. Include procedures for pollution prevention/ hazardous waste minimization in the Hazardous Waste Management Section of the Environmental Protection Plan. Consult with the activity Environmental Office for suggestions and to obtain a copy of the installation's pollution prevention/hazardous waste minimization plan for reference material when preparing this part of the plan. If no written plan exists, obtain information by contacting the Contracting Officer. Describe the types of the hazardous materials expected to be used in the construction when requesting information.

3.6 WASTE HAZARDOUS MATERIAL (WHM)/HAZARDOUS WASTE (HW) MATERIALS PROHIBITION

No waste hazardous material or hazardous waste shall be disposed of on government property. No hazardous material shall be brought onto government property that does not directly relate to requirements for the performance of this contract. The government is not responsible for disposal of Contractor's waste material brought on the job site and not required in the performance of this contract. The intent of this provision is to dispose of that waste identified as waste hazardous material/hazardous waste as defined herein that was generated as part of this contract and existed within the boundary of the Contract limits and not brought in from offsite by the Contractor. Incidental materials used to support the contract including, but not limited to aerosol cans, waste paint, cleaning solvents, contaminated brushes, rags, clothing, etc. are the responsibility of the Contractor. The list is illustrative rather than inclusive. The Contractor is not authorized to discharge any materials to sanitary sewer, storm drain, or to the river or conduct waste treatment or disposal on government property without written approval of the Contracting Officer.

3.7 HAZARDOUS MATERIAL MANAGEMENT

Include hazardous material control procedures in the Safety Plan. Address procedures and proper handling of hazardous materials, including the appropriate transportation requirements. No hazardous material shall be brought onto government property that does not directly relate to requirements for the performance of this contract. Submit a MSDS and estimated quantities to be used for each hazardous material to the Contracting Officer prior to bringing the material on base. Typical materials requiring MSDS and quantity reporting include, but are not limited to, oil and latex based painting and caulking products, solvents, adhesives, aerosol, and petroleum products. Ensure that hazardous materials are utilized in a manner that will minimize the amount of hazardous waste that is generated. Ensure that all containers of hazardous materials have NFPA labels or their equivalent. Certify that all hazardous materials removed from the site are hazardous materials and do not meet the definition of hazardous waste per 40 CFR 261.

3.7.1 Contractor Hazardous Material Inventory Log

Submit the "Contractor Hazardous Material Inventory Log"(found at: http://www.wbdg.org/ccb/NAVGRAPH/graphtoc.pdf), which provides information required by (EPCRA Sections 312 and 313) along with corresponding Material Safety Data Sheets (MSDS), to the Contracting Officer at the start and at the end of construction (30 days from final acceptance), and update no later than January 31 of each calendar year during the life of the contract. Keep copies of the MSDS for hazardous materials on site at all times. At the end of the project, provide the Contracting Officer with copies of all of these MSDS, and the maximum quantity of each material that was present at the site at any one time, the dates the material was present, the amount of each material that was used during the project, and how the material was used.

Documentation for any spills/releases, environmental reports or off-site transfers may be requested by the Contracting Officer.

3.8 PETROLEUM PRODUCTS AND REFUELING

Conduct the fueling and lubricating of equipment and motor vehicles in a manner that protects against spills and evaporation. Manage all used oil generated on site in accordance with 40 CFR 279. Determine if any used oil generated while on-site exhibits a characteristic of hazardous waste. Used oil containing 1000 parts per million of solvents will be considered a hazardous waste and disposed of at Contractor's expense. Used oil mixed with a hazardous waste will also be considered a hazardous waste.

3.8.1 Oily and Hazardous Substances

Prevent oil or hazardous substances from entering the ground, drainage areas, or navigable waters. In accordance with 40 CFR 112, surround all temporary fuel oil or petroleum storage tanks with a temporary berm or containment of sufficient size and strength to contain the contents of the tanks, plus 10 percent freeboard for precipitation. The berm will be impervious to oil for 72 hours and be constructed so that any discharge will not permeate, drain, infiltrate, or otherwise escape before cleanup occurs. Provide general secondary containment for oil transfer operations as required by 40 CFR 112.7.

3.8.2 Inadvertent Discovery of Petroleum Contaminated Soil or Hazardous Wastes

If petroleum contaminated soil or suspected hazardous waste is found during construction that was not identified in the contract documents, the contractor shall immediately notify the contracting officer. The contractor shall not disturb this material until authorized by the contracting officer.

3.9 FUEL TANKS

Petroleum products and lubricants required to sustain up to 30 days of construction activity may be kept on site. Storage and refilling practices shall comply with 40 CFR Part 112. Secondary containment shall be provided and be no less than 110 percent of the tank volume plus five inches of free-board. If a secondary berm is used for containment then the berm shall be impervious to oil for 72 hours and be constructed so that any discharge will not permeate, drain, infiltrate, or otherwise escape before cleanup occurs. Drips pans are required and the tanks must be covered during inclement weather.

3.10 RELEASES/SPILLS OF OIL AND HAZARDOUS SUBSTANCES

Exercise due diligence to prevent, contain, and respond to spills of hazardous material, hazardous substances, hazardous waste, sewage, regulated gas, petroleum, lubrication oil, and other substances regulated by environmental law. Maintain spill cleanup equipment and materials at the work site. In the event of a spill, take prompt, effective action to stop, contain, curtail, or otherwise limit the amount, duration, and severity of the spill/release. In the event of any releases of oil and hazardous substances, chemicals, or gases; immediately (within 15 minutes) notify the Base or Activity Fire Department, the activity's Command Duty Officer, and the Contracting Officer. If the contractor's response is inadequate, the Navy may respond. If this should occur, the contractor will be required to reimburse the government for spill response assistance and analysis.

The Contractor is responsible for verbal and written notifications as required by the federal 40 CFR 355, State, local regulations and Navy Instructions. Spill response will be in accordance with 40 CFR 300 and applicable State and local regulations. Contain and clean up these spills without cost to the Government. If Government assistance is requested or required, the Contractor will reimburse the Government for such assistance. Provide copies of the written notification and documentation that a verbal notification was made within 20 days.

Maintain spill cleanup equipment and materials at the work site. Clean up all hazardous and non-hazardous (WHM) waste spills. The Contractor shall reimburse the government for all material, equipment, and clothing generated during any spill cleanup. The Contractor shall reimburse the government for all costs incurred including sample analysis materials, equipment, and labor if the government must initiate its own spill cleanup procedures, for Contractor responsible spills, when:

a. The Contractor has not begun spill cleanup procedure within one hour of spill discovery/occurrence, or

b. If, in the government's judgment, the Contractor's spill cleanup is not adequately abating life threatening situation and/or is a threat to any body of water or environmentally sensitive areas.

3.11 CONTROL AND MANAGEMENT OF ASBESTOS CONTAINING MATERIAL (ACM)

Items, components, or materials disturbed by or included in work under this contract do involve asbestos. Other materials in the general area around where work will be performed may contain asbestos. All thermal insulation, in all work areas, should be considered to be asbestos unless positively identified by conspicuous tags or previous laboratory analysis certifying them as asbestos free.

Inadvertent discovery of non-disclosed asbestos that will result in an abatement action requires a change in scope before proceeding. Upon discovery of asbestos containing material not identified in the contract documents, the Contractor shall immediately stop all work that would generate further damage to the material, evacuate the asbestos exposed area, and notify the Contracting Officer for resolution of the situation prior to resuming normal work activities in the affected area. Do not remove or perform work on any asbestos containing materials without the prior approval of the Contracting Officer. Do not engage in any activity, which would remove or damage such materials or cause the generation of fibers from such materials.

Manage and dispose of asbestos containing waste in accordance with applicable environmental law. Asbestos containing waste shall be manifested and the manifest provided to the Contracting Officer.

3.12 CONTROL AND MANAGEMENT OF HAZARDOUS WASTES

3.12.1 Facility Hazardous Waste Generator Status

NAVSTA Great Lakes is designated as a Large Quantity Generator. All work conducted within the boundaries of this activity must meet the regulatory requirements of this generator designation. Comply with all provisions of Federal, State and local regulatory requirements applicable to this generator status regarding training and storage, handling, and disposal of all construction derived wastes.

3.12.2 Hazardous Waste/Debris Management

Identify all construction activities which will generate hazardous waste/debris. Provide a documented waste determination for all resultant waste streams. Hazardous waste/debris will be identified, labeled, handled, stored, and disposed of in accordance with all Federal, State, and local regulations including 40 CFR 261, 40 CFR 262, 40 CFR 263, 40 CFR 264, 40 CFR 265, 40 CFR 266, and 40 CFR 268.

Hazardous waste will also be managed in accordance with the approved Hazardous Waste Management Section of the Environmental Protection Plan. Store hazardous wastes in approved containers in accordance with 49 CFR 173 and 49 CFR 178. Hazardous waste generated within the confines of Government facilities will be identified as being generated by the Government.

Prior to removal of any hazardous waste from Government property, all hazardous waste manifests must be signed by activity personnel from the Station Environmental Office. No hazardous waste must be brought onto Government property. Provide to the Contracting Officer a copy of waste determination documentation for any solid waste streams that have any potential to be hazardous waste or contain any chemical constituents listed in 40 CFR 372-SUBPART D. For hazardous wastes spills, verbally notify the Contracting Officer immediately.

3.12.2.1 Regulated Waste Storage/Satellite Accumulation/90 Day Storage Areas

If the work requires the temporary storage/collection of regulated or hazardous wastes, the Contractor will request the establishment of a Regulated Waste Storage Area, a Satellite Accumulation Area, or a 90 Day Storage Area at the point of generation. The Contractor must submit a request in writing to the Contracting Officer providing the following information:

Contract Number	
Contractor	
Haz/Waste or Regulated Waste POC	
Phone Number	
Type of Waste	
Source of Waste	
Emergency POC	
Phone Number	
Location of the Site	

(Attach Site Plan to the Request)

Attach a waste determination form. Allow ten working days for processing this request. The designated area where waste is being stored shall be barricaded and a sign identifying as follows:

"DANGER - UNAUTHORIZED PERSONNEL KEEP OUT"

3.12.2.2 Sampling and Analysis of Hazardous Waste (HW)

a. Waste Sampling

Sample waste in accordance with EPA 530/F-93/004. Each sampled drum or container will be clearly marked with the Contractor's identification number and cross referenced to the chemical analysis performed.

b. Laboratory Analysis

Follow the analytical procedure and methods in accordance with the 40 CFR 261. The Contractor will provide all analytical results and reports performed to the Contracting Officer

c. Analysis Type

Identify waste hazardous material/hazardous waste by analyzing for the following properties as a minimum: ignitability, corrosiveness, total chlorides, BTU value, PCBs, TCLP for heavy metals, and cyanide.

3.12.2.3 Hazardous Waste Disposal

No hazardous, toxic, or universal waste shall be disposed or hazardous material abandoned on government property. And unless otherwise noted in this contract, the government is not responsible for disposal of Contractor generated waste material. The disposal of incidental materials used to accomplish the work including, but not limited to aerosol cans, waste paint, cleaning solvents, contaminated brushes, rags, clothing, etc. are the responsibility of the Contractor. The list is illustrative rather than inclusive.

The Contractor is not authorized to discharge any materials to sanitary sewer, storm drain, or water way or conduct waste treatment or disposal on government property without written approval of the Contracting Officer.

Control of stored waste, packaging, sampling, analysis, and disposal will be determined by the details in the contract. The requirements for jobs in the following paragraphs will be used as the guidelines for disposal of any hazardous waste generated.

a. Responsibilities for Contractor's Disposal

Contractor responsibilities include any generation of WHM/HW requiring Contractor disposal of solid waste or liquid.

(1) Provide all service necessary for the final treatment/disposal of the hazardous material/waste in accordance with all local, State and Federal laws and regulations, and the terms and conditions of the contract within sixty (60) days after the materials have been generated. These services will include all necessary personnel, labor, transportation, packaging, detailed analysis (if required for disposal, and/or transportation, including manifesting or completing waste profile sheets, equipment, and the compilation of all documentation is required).

(2) Contain all waste in accordance with 40 CFR 260, 40 CFR 261, 40 CFR 262, 40 CFR 263, 40 CFR 264, 40 CFR 265, 40 CFR 266, 40 CFR 268, 40 CFR 270, 40 CFR 272, 40 CFR 273, 40 CFR 279, 40 CFR 280, and 40 CFR 761.

(3) Obtain a representative sample of the material generated for each job done to provide waste stream determination.

(4) Analyze each sample taken and providing analytical results to the Contracting Officer. Provide two copies of the results.

(5) Determine the DOT proper shipping names for all waste (each container requiring disposal) and will demonstrate how this determination is developed and supported by the sampling and analysis requirements contained herein to the Contracting Officer.

Contractor Disposal Turn-In Requirements

For any waste hazardous materials or hazardous waste generated which requires the Contractor to dispose of, the following conditions must be complied with in order to be acceptable for disposal:

(1) Drums compatible with waste contents and drums meet DOT requirements for 49 CFR 173 for transportation of materials.

(2) Drums banded to wooden pallets. No more than three (3) 55 gallon drums to a pallet, or two (2) 85 gallon over packs.

(3) Band using 1-1/4 inch minimum band on upper third of drum.

(4) Recovery materials label (provided by Code 106.321) located in middle of drum, filled out to indicate actual volume of material, name of material manufacturer, other vendor information as available.

(5) Always have three (3) to five (5) inches of empty space above volume of material. This space is called 'outage'.

3.12.2.4 Universal Waste/e-Waste Management

Universal waste including but not limited to some mercury containing building products such florescent lamps, mercury vapor lamps, high pressure sodium lamps, CRTs, batteries, aerosol paint containers, electrical equipment containing PCBs, and consumed electronic devices, shall be managed in accordance with applicable environmental law and installation instructions.

3.12.3 Class I and II ODS Prohibition

Class I and II ODS in pure or blended form as defined and identified herein must not be used in the performance of this contract, nor be provided as part of the equipment except for the use of servicing existing government owned equipment. This prohibition will be considered to prevail over any other provision, specification, drawing, or referenced documents.

3.12.3.1 Recycling Requirements

Recycle used refrigerants and ozone depleting substances generated during the performance of this contract to the maximum extent practicable to minimize used refrigerant and ozone depleting substance disposal as HW.

Test, collect, transfer, recycle, and/or arrange for shipping and proper disposal of used refrigerants and ozone depleting substances generated during the performance of work under this contract. The Contractor is responsible for all associated costs.

Any and all Class I ODS and R-22 recovered by the Contractor as part of this contract shall be packaged and turned over to the Government for recycling upon the completion of the work covered by this contract. The Contractor shall arrange for recycling of used refrigerants not turned over to the government, at a licensed refrigerant recycler approved by the Contracting Officer.

3.12.3.2 EPA Certification Requirements

Heating and air conditioning technicians must be certified through an EPA-approved program. Copies of certifications shall be maintained at the employees' place of business and be carried as a wallet card by the technician, as provided by environmental law. .

3.12.3.3 Accidental Venting of Refrigerant

Accidental venting of a refrigerant is a release and must be reported to the Contracting Officer

3.13 DUST CONTROL

Keep dust down at all times, including during nonworking periods. Sprinkle or treat, with dust suppressants, the soil at the site, haul roads, and other areas disturbed by operations. Dry power brooming will not be permitted. Instead, use vacuuming, wet mopping, wet sweeping, or wet power

brooming. Air blowing will be permitted only for cleaning nonparticulate debris such as steel reinforcing bars. Only wet cutting will be permitted for cutting concrete blocks, concrete, and bituminous concrete. Do not unnecessarily shake bags of cement, concrete mortar, or plaster.

3.13.1 Dirt and Dust Control Plan

Submit truck and material haul routes along with a plan for controlling dirt, debris, and dust on base roadways. As a minimum, identify in the plan the subcontractor and equipment for cleaning along the haul route and measures to reduce dirt, dust, and debris from roadways.

3.14 ABRASIVE BLASTING

3.14.1 Blasting Operations

The use of silica sand is prohibited in sandblasting.

Provide tarpaulin drop cloths and windscreens to enclose abrasive blasting operations to confine and collect dust, abrasive, agent, paint chips, and other debris in accordance with the requirements specified. Perform work involving removal of hazardous material in accordance with 29 CFR 1910.

3.14.2 Disposal Requirements

Submit analytical results of the debris generated from abrasive blasting operations per Laboratory Analysis in paragraph SAMPLING AND ANALYSIS OF HW. Hazardous waste generated from blasting operations will be managed in accordance with paragraph CONTROL AND MANAGEMENT OF HAZARDOUS WASTE and with the approved HWMP. Disposal of non-hazardous abrasive blasting debris will be in accordance with paragraph CONTROL AND DISPOSAL OF SOLID WASTES.

3.15 NOISE

Make the maximum use of low-noise emission products, as certified by the EPA. Blasting or use of explosives will not be permitted without written permission from the Contracting Officer, and then only during the designated times. Confine pile-driving operations to the period between 8 a.m. and 4 p.m., Monday through Friday, exclusive of holidays, unless otherwise specified.

3.16 MERCURY MATERIALS

Mercury is prohibited in the construction of this facility, unless specified otherwise, and with the exception of mercury vapor lamps and fluorescent lamps. Dumping of mercury-containing materials and devices such as mercury vapor lamps, fluorescent lamps, and mercury switches, in rubbish containers is prohibited. Remove without breaking, pack to prevent breakage, and transport out of the activity in an unbroken condition for disposal as directed. Immediately report to the Environmental Office and the Contracting Officer instances of breakage or mercury spillage. Clean mercury spill area to the satisfaction of the Contracting Officer.

Cleanup of a mercury spill shall not be recycled and shall be managed as a hazardous waste for disposal.

-- End of Section --

SECTION 01 57 19.01 20

SUPPLEMENTAL TEMPORARY ENVIRONMENTAL CONTROLS
05/10

PART 1 GENERAL

1.1 SUBMITTALS

Government approval is required for submittals with a "G" designation; submittals not having a “G” designation are for Contractor Quality Control approval. The following shall be submitted in accordance with Section 01 33 10.05 20 DESIGN SUBMITTAL PROCEDURES:

SD-01 Preconstruction Submittals

Excavation Permits; G

Dirt and Dust Control Plan; G

Hazardous Operations Permit; G

1.2 REGIONAL REQUIREMENTS

1.2.1 MIDLANT

1.2.1.1 Illinois

a. Great Lakes: Refer to the appendices that follow this Section.

PART 2 PRODUCTS

Not used.

PART 3 EXECUTION

Not used.

-- End of Section --

PART 1: GENERAL

P-816 Asbestos/Hazardous Materials Project Summary

Five EDI Reports document Asbestos findings and are found within Section 6. These reports were conducted in 2011 (dated February 2012) in conjunction with this project as follows:

- *Steam Tunnels and Associated Pits*
- *Steam Chases*
- *Steam Lines Installed Post-1991*
- *Above Ground Steam Lines*
- *Buildings Associated with Steam Lines*

The following summarizes the information within the five listed reports. **The following summary statements and illustrations are a guide only; and do not replace or substitute for the reports in their entity**:

ACM Below-ground Sample Summary (Steam Pits)

- No ACM was identified on any below ground pipe jacketing.
- ACM was identified on fittings within pits associated with the central tunnel area surrounding Ross Field. Maryland Street areas identified in the EDI report are not a part of this project.
- All pits associated with the central tunnel area are to be abated as a part of this project.
- All pits will be abandoned/removed as a part of the demolition task.
- At project conclusion, all identified ACM below ground will have been removed.

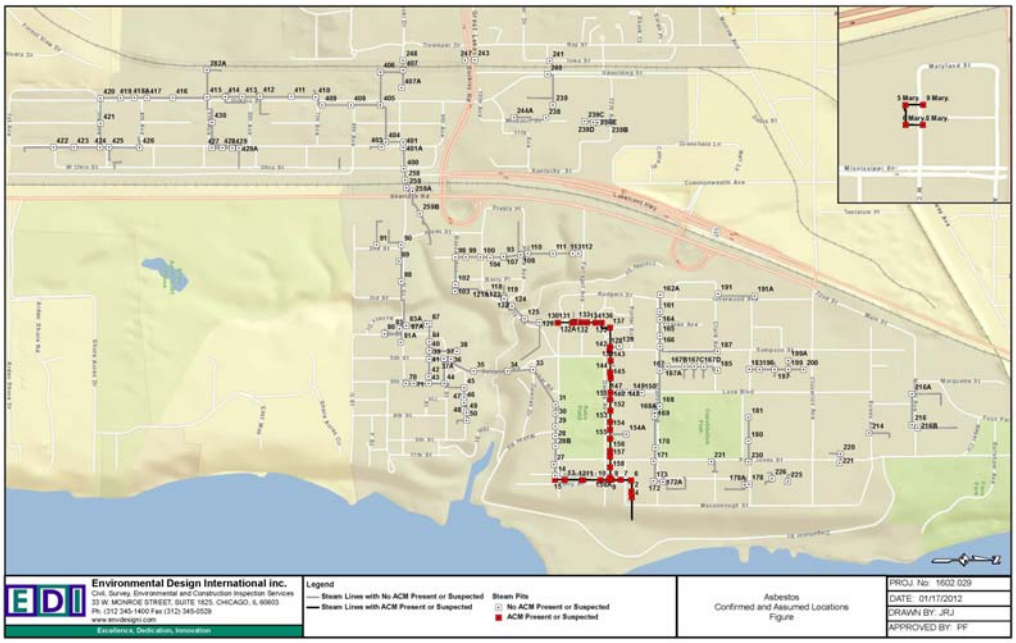

ACM Below-ground Sample Summary (Steam Pit Samples)

NSGL Above-Ground Steam Line Summary

See the EDI report dated February 9, 2012 for details.

- All Above-Ground Steam Lines (approximately 50,000 linear feet) have ACM associated with an interior insulating jacket.
- Approximately 2,400 elbows and fittings associated with the Above-Ground steam lines contain ACM and must be abated/removed.
- All Above-Ground Steam Lines are shall be abated/removed as a part of the demolition task.
- Lead-based green paint is present on steel steam line support trestles.

***Removal of components and disposal of steam lines/trestles into a permitted landfill is recommended vs. abatement.**

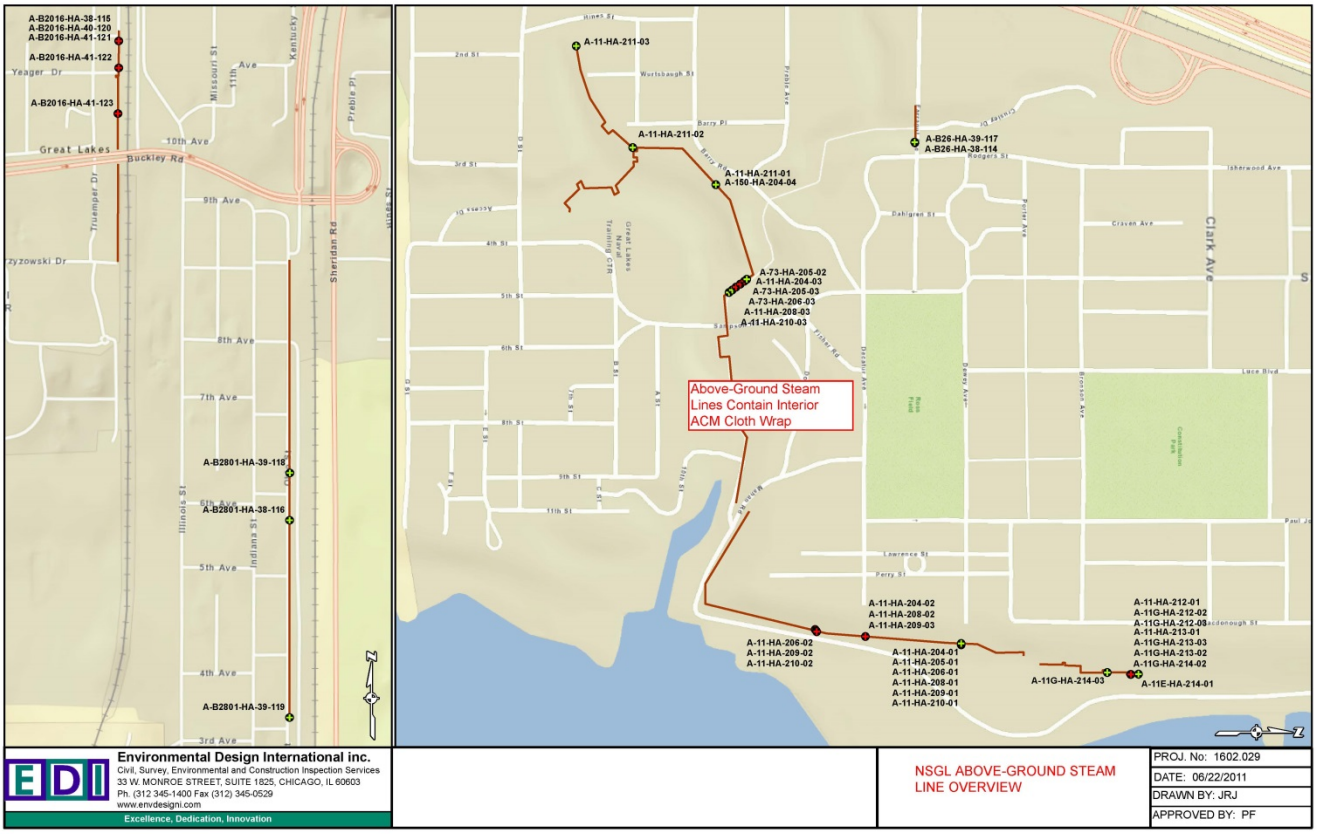

BUILDING 11 SUMMARY

See the Building 11 Report by Bloom Companies within Section 6. Essentially, there are three large boilers (4, 5, and 6) referenced within this document that are jacketed with ACM (approximately 12,000 square feet). As an augmentation to figures presented in section 6, we include a figure below showing elevations of boilers 5 and 6 relative to the portion of Building 11 that will be demolished. Along with the boilers are multiple interior associated steam/condensate lines (approximately 4,600 linear feet) that are clearly marked as to ACM content. All ACMs must be abated or removed prior to conclusion of demolition. Lead-based paint areas are summarized at the conclusion of this narrative.

Removal of components either during or after demolition of the surrounding building envelope and disposal into a permitted landfill in lieu of abatement should be considered.

A generalized figure of the boiler layout is below, followed by a scaled vertical elevation figure of Boilers 5 and 6:

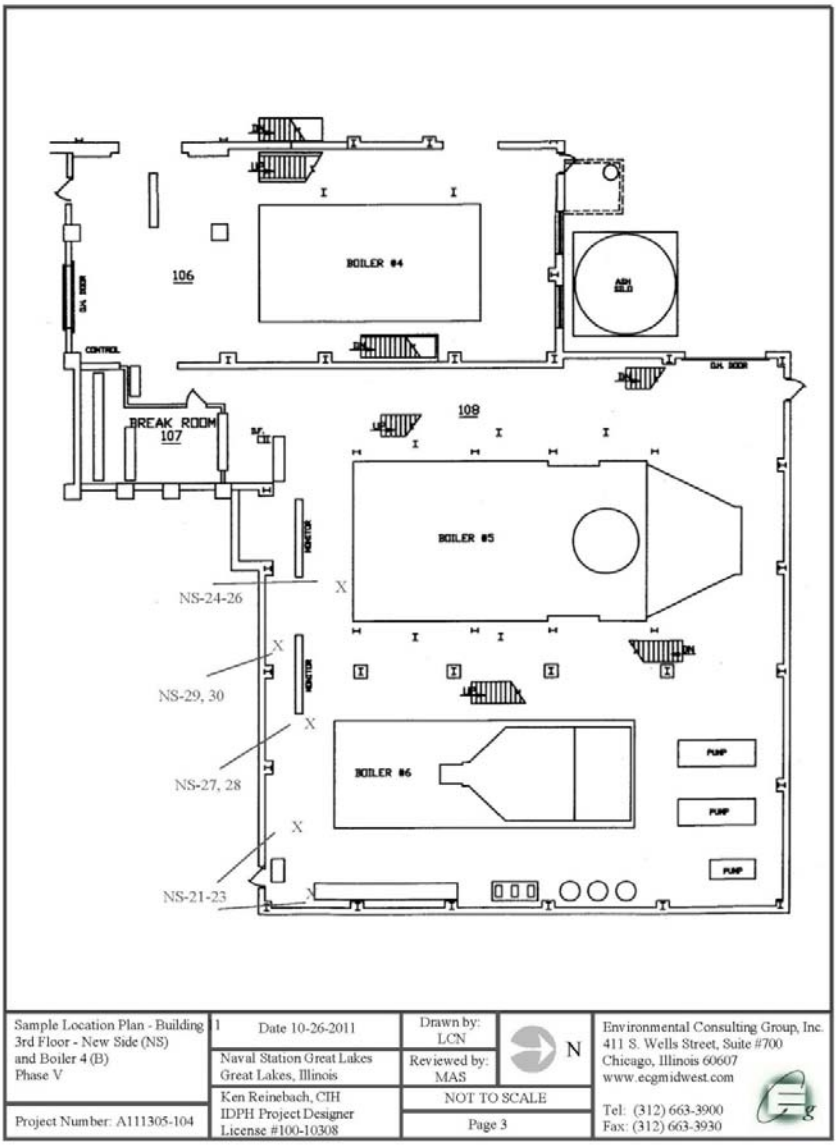

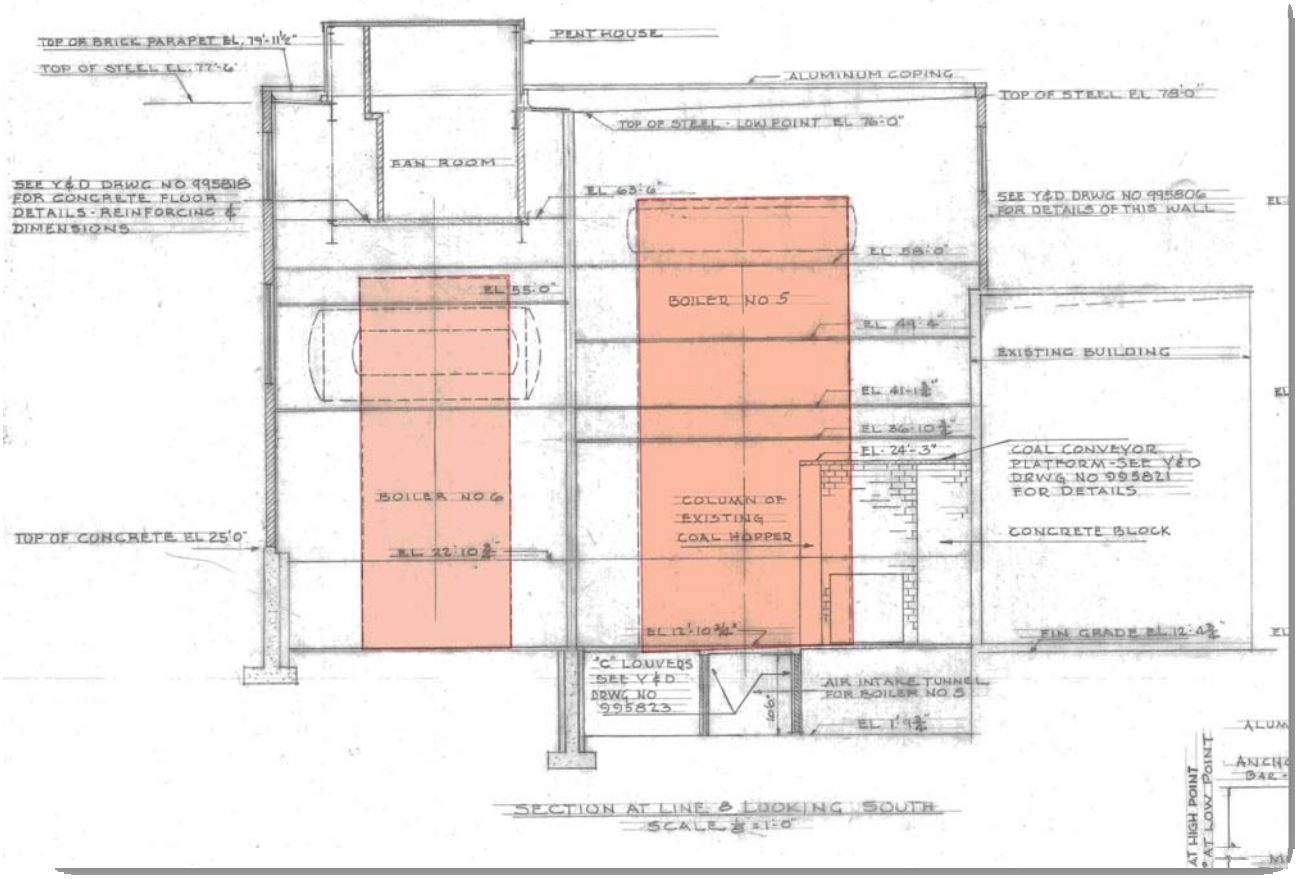

2009 B-11 ABATEMENT

In 2009, ACM abatement was accomplished in the second floor and above in the “de-aerator” room within the 1905-1910 constructed Building 11 (“old side” in Bloom report). This area is identified grossly in the figure below. Approximately 5,150 linear feet of piping was abated and reinsulated with non-ACM insulation. Condensate tanks (approximately 850 square feet) referred to ACM within the 2011 report and referencing the Cape survey (1997) indicated as positive on the latest survey within the old building do not take the 2009 abatement into account. No report is available at this time documenting the 2009 abatement. However, at the end of the Bloom Building 11 asbestos survey is the scope of work (SOW) for abatement of this room, prepared by EDI and dated March 28, 2008. We assume this SOW was followed. A graphic of the 2009 abated area follows:

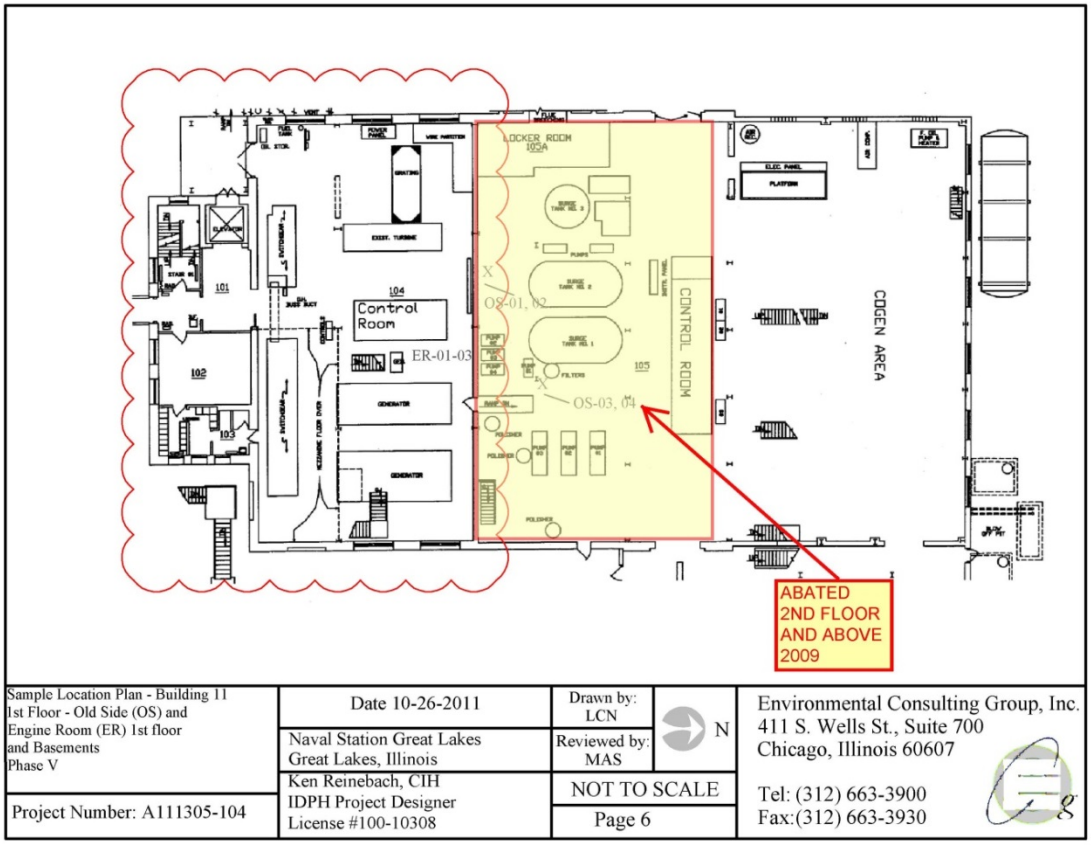

Sample Location Plan - Building 11 1st Floor - Old Side (OS) and Engine Room (ER) 1st floor and Basements Phase V	Date 10-26-2011	Drawn by: LCN	N
	Naval Station Great Lakes Great Lakes, Illinois	Reviewed by: MAS	
Project Number: A111305-104	Ken Reinebach, CIH IDPH Project Designer License #100-10308	NOT TO SCALE	
		Page 6	

Environmental Consulting Group, Inc.
411 S. Wells St., Suite 700
Chicago, Illinois 60607

Tel: (312) 663-3900
Fax:(312) 663-3930

Tank 11E Asbestos Summary

- There is non-friable ACM caulk at the base of the AST.

Building 11 Lead-Based Paint Summary

<u>Engine Room (ER) – (Southwest Section-Old Side)</u>

- Tan Paint – Walls by Generator Area
- Yellow Paint – Stair Rail by Generator Area
- Green Paint – Pillars by the Generator Area
- Green Paint – Walls in the Machine Shop Room 303
- Blue Paint – Exterior Window in Conference Room 202

<u>Co-Gen and Old side (CG, OS) – (Northwest Section-Old Side)</u>

- Silver Paint – Walls by Surge Tank Area
- Yellow Paint – Rail by Surge Tank Area

Tank 11E Lead-Based Paint Summary

- Paint encasing the AST is not lead-based paint (LBP).

1.1 ADMINISTRATIVE PROCEDURES

Submit copies of weight bills and delivery tickets for payment to the Contracting Officer during the progress of the work. Furnish scale tickets for each load of ACM weighed and certified. These tickets shall include tare weight; identification mark for each vehicle weighed; and date, time and location of loading and unloading. Tickets shall be furnished at the point and time individual trucks arrive at the worksite. A master log of all vehicle loading shall be furnished for each day of loading operations. File with the Contracting Officer certified weigh bills and/or certified tickets and manifests of all ACM actually disposed by the Contractor for this contract.

1.2 REFERENCES

The publications listed below form a part of this specification to the extent referenced. The publications are referred to within the text by the basic designation only.

AMERICAN INDUSTRIAL HYGIENE ASSOCIATION (AIHA)
AIHA Z9.2(2006) Fundamentals Governing the Design and Operation of Local Exhaust Ventilation Systems

ASTM INTERNATIONAL (ASTM)
ASTM D 4397(2010) Standard Specification for Polyethylene Sheeting for Construction, Industrial, and Agricultural Applications
ASTM E 1368(2005e1) Visual Inspection of Asbestos Abatement Projects

COMPRESSED GAS ASSOCIATION (CGA)
CGA G-7(2008) Compressed Air for Human Respiration; 6th Edition

INTERNATIONAL SAFETY EQUIPMENT ASSOCIATION (ISEA)
ANSI/ISEA Z87.1(2010) Occupational and Educational Personal Eye and Face Protection Devices

NATIONAL FIRE PROTECTION ASSOCIATION (NFPA)
NFPA 701(2010) Standard Methods of Fire Tests for Flame Propagation of Textiles and Films

NATIONAL INSTITUTE FOR OCCUPATIONAL SAFETY AND HEALTH (NIOSH)
NIOSH 2003-154(2003; 4th Ed; Supple 3) NIOSH Manual of Analytical Methods

STATE OF ILLINOIS ASBESTOS REGULATIONS
Asbestos Abatement Act (105 ILCS 105)
Commercial and Public Building Asbestos Abatement Act (225 ILCS 207)
Asbestos Abatement for Public and Private Schools and Commercial and Public Buildings in Illinois (77 Ill. Adm. Code 855)
35 Illinois Adm. Code 288

U.S. ARMY CORPS OF ENGINEERS (USACE)
EM 385-1-1(2008; Errata 1-2010; Changes 1-3 2010; Changes 4-6 2011) Safety and Health Requirements Manual

EP 1110-1-11(1992; Change 1 1997) Engineering and Design -- Asbestos Abatement Guideline Detail Sheets

U.S. ENVIRONMENTAL PROTECTION AGENCY (EPA)
EPA 340/1-90/018(1990) Asbestos/NESHAP Regulated Asbestos Containing Materials Guidance

U.S. NATIONAL ARCHIVES AND RECORDS ADMINISTRATION
(NARA) 29 CFR 1910.134 Respiratory Protection
29 CFR 1910.141 Sanitation
29 CFR 1910.147 Control of Hazardous Energy (Lock Out/Tag
Out) 29 CFR 1926.1101 Asbestos
29 CFR 1926.32 Safety and Health Regulations for Construction -
Definition 40 CFR 61 National Emission Standards for Hazardous Air
Pollutants
40 CFR 763 Asbestos
42 CFR 84 Approval of Respiratory Protective
Devices 49 CFR 107 Hazardous Materials Program
Procedures
49 CFR 171 General Information, Regulations, and Definitions
49 CFR 172 Hazardous Materials Table, Special Provisions, Hazardous Materials Communications, Emergency Response Information, and Training Requirements
49 CFR 173 Shippers - General Requirements for Shipments and Packagings

UNDERWRITERS LABORATORIES (UL)
UL 586(2009) Standard for High-Efficiency Particulate, Air Filter Units

1.3 DEFINITIONS

1.3.1 Amended Water
Water containing a wetting agent or surfactant with a surface tension of at least 29 dynes per square centimeter.

1.3.2 Asbestos-Containing Material (ACM)
Any materials containing more than one percent asbestos.

1.3.3 Authorized Person
Any person authorized by the Contractor and required by work duties to be present in the regulated areas.

1.3.4 Building Inspector
Individual who inspects buildings for asbestos and has EPA Model Accreditation Plan (MAP) "Building Inspector" training; accreditation required by 40 CFR 763, Subpart E, Appendix C, has EPA/State certification/license as a "Building Inspector".

1.3.5 Class I Asbestos Work
Activities defined by OSHA involving the removal of thermal system insulation (TSI) and surfacing ACM.

1.3.6 Class II Asbestos Work
Activities defined by OSHA involving the removal of ACM which is not thermal system insulation or surfacing material. This includes, but is not limited to, the removal of asbestos - containing wallboard, floor tile and sheeting, roofing and siding shingles, and construction mastic. Certain "incidental" roofing materials such as mastic, flashing and cements when they are still intact are excluded from Class II asbestos work. Removal of small amounts of these materials which would fit into a glovebag may be classified as a Class III job.

1.3.7 Class III Asbestos Work
Activities defined by OSHA that involve repair and maintenance operations, where ACM, including TSI and surfacing ACM, is likely to be disturbed. Operations may include drilling, abrading, cutting a hole, cable pulling, crawling through tunnels or attics and spaces above the ceiling, where asbestos is actively disturbed or asbestos-containing debris is actively disturbed.

1.3.8 Class IV Asbestos Work
Maintenance and custodial construction activities during which employees contact but do not disturb ACM and activities to clean-up dust, waste and debris resulting from Class I, II, and III activities. This may include dusting surfaces where ACM waste and debris and accompanying dust exists and cleaning up loose ACM debris from TSI or surfacing ACM following construction

1.3.9 Clean Room
An uncontaminated room having facilities for the storage of employees' street clothing and uncontaminated materials and equipment.

1.3.10 Competent Person
In addition to the definition in 29 CFR 1926.32(f), a person who is capable of identifying existing asbestos hazards as defined in 29 CFR 1926.1101, selecting the appropriate control strategy, has the authority to take prompt corrective measures to eliminate them and has EPA Model Accreditation Plan (MAP) "Contractor/Supervisor" training; has EPA/State certification/license as a "Contractor/Supervisor".

1.3.11 Contractor/Supervisor
Individual who supervises asbestos abatement work and has EPA Model Accreditation Plan "Contractor/Supervisor" training; has EPA/State certification as a "Contractor/Supervisor".

1.3.12 Critical Barrier
One or more layers of plastic sealed over all openings into a regulated area or any other similarly placed physical barrier sufficient to prevent airborne asbestos in a regulated area from migrating to an adjacent area.

1.3.13 Decontamination Area
An enclosed area adjacent and connected to the regulated area and consisting of an equipment room, shower area, and clean room, which is used for the decontamination of workers, materials, and equipment that are contaminated with asbestos.

1.3.14 Demolition
The wrecking or taking out of any load-supporting structural member and any related razing, removing, or stripping of asbestos products.

1.3.15 Disposal Bag
A 0.15 mm 6 mil thick, leak-tight plastic bag, pre-labeled in accordance with 29 CFR 1926.1101, used for transporting asbestos waste from containment to disposal site.

1.3.16 Disturbance
Activities that disrupt the matrix of ACM, crumble or pulverize ACM, or generate visible debris from ACM. Disturbance includes cutting away small amounts of ACM, no greater than the amount which can be contained in 1 standard sized glovebag or waste bag, not larger than 1.5 m 60 inches in length and width in order to access a building component.

1.3.17 Equipment Room or Area
An area adjacent to the regulated area used for the decontamination of employees and their equipment.

1.3.18 Fiber
A fibrous particulate, 5 micrometers or longer, with a length to width ratio of at least 3 to 1.

1.3.19 Friable ACM
A term defined in 40 CFR 61, Subpart M and EPA 340/1-90/018 meaning any material which contains more than 1 percent asbestos, as determined using the method specified in 40 CFR 763, Polarized Light Microscopy (PLM), that when dry, can be crumbled, pulverized, or reduced to powder by hand pressure.

1.3.20 Glovebag
Not more than a 1.5 by 1.5 m 60 by 60 inch impervious plastic bag-like enclosure affixed around an asbestos-containing material, with glove-like appendages through which material and tools may be handled.

1.3.21 High-Efficiency Particulate Air (HEPA) Filter
A filter capable of trapping and retaining at least 99.97 percent of all mono-dispersed particles of 0.3 micrometers in diameter.

1.3.22 Intact
ACM which has not crumbled, been pulverized, or otherwise deteriorated so that the asbestos is no longer likely to be bound with its matrix. Removal of "intact" asphaltic, resinous, cementitious products does not render the ACM non-intact simply by being separated into smaller pieces.

1.3.23 Model Accreditation Plan (MAP)
USEPA training accreditation requirements for persons who work with asbestos as specified in 40 CFR 763.

1.3.24 Negative Initial Exposure Assessment
A demonstration by the Contractor to show that employee exposure during an operation is expected to be consistently below the OSHA Permissible Exposure Limits (PELs).

1.3.25 NESHAP
National Emission Standards for Hazardous Air Pollutants. The USEPA NESHAP regulation for asbestos is at 40 CFR 61, Subpart M.

1.3.26 Nonfriable ACM
A NESHAP term defined in 40 CFR 61, Subpart M and EPA 340/1-90/018 meaning any material containing more than 1 percent asbestos that, when dry, cannot be crumbled, pulverized or reduced to powder by hand pressure.

1.3.27 Nonfriable ACM (Category I)
A NESHAP term defined in 40 CFR 61, Subpart E and EPA 340/1-90/018 meaning asbestos-containing packings, gaskets, resilient floor covering, and asphalt roofing products containing more than 1 percent asbestos.

1.3.28 Nonfriable ACM (Category II)
A NESHAP term defined in 40 CFR 61, Subpart E and EPA 340/1-90/018 meaning any material, excluding Category I nonfriable ACM, containing more than 1 percent asbestos.

1.3.29 Permissible Exposure Limits (PELs)

1.3.29.1 PEL-Time Weighted Average(TWA)
Concentration of asbestos not in excess of 0.1 fibers per cubic centimeter of air (f/cc) as an 8 hour time weighted average (TWA).

1.3.29.2 PEL-Excursion Limit
An airborne concentration of asbestos not in excess of 1.0 f/cc of air as averaged over a sampling period of 30 minutes.

1.3.30 Regulated Area
An OSHA term defined in 29 CFR 1926.1101 meaning an area established by the Contractor to demarcate areas where Class I, II, and III asbestos work is conducted; also any adjoining area where debris and waste from such asbestos work accumulate; and an area within which airborne concentrations of asbestos exceed, or there is a reasonable possibility they may exceed, the permissible exposure limit.

1.3.31 Removal
All operations where ACM is taken out or stripped from structures or substrates, and includes demolition operations.

1.3.32 Repair
Overhauling, rebuilding, reconstructing, or reconditioning of structures or substrates, including encapsulation or other repair of ACM attached to structures or substrates.

1.3.33 Surfacing ACM
Asbestos-containing material which contains more than 1% asbestos and is sprayed-on, troweled-on, or otherwise applied to surfaces, such as acoustical plaster on ceilings and fireproofing materials on structural members, or other materials on surfaces for acoustical, fireproofing, or other purposes.

1.3.34 Thermal System Insulation (TSI) ACM
ACM which contains more than 1% asbestos and is applied to pipes, fittings, boilers, breeching, tanks, ducts, or other interior structural components to prevent heat loss or gain or water condensation.

1.3.35 Transite
A generic name for asbestos cement wallboard and pipe.

1.3.36 Worker
Individual (not designated as the Competent Person or a supervisor) who performs asbestos work and has completed asbestos worker training required by 29 CFR 1926.1101, to include EPA Model Accreditation Plan (MAP) "Worker" training; accreditation if required by the OSHA Class of work to be performed or by the state where the work is to be performed.

1.4 SYSTEM DESCRIPTION

This section covers all operations in which asbestos-containing materials (ACM) are encountered. These procedures and equipment are required to protect workers and building occupants from airborne asbestos fibers and ACM dust and debris. Activities include OSHA [Class I] [Class II][Class III] [Class IV] work operations. This section also includes containment, storage, transportation and disposal of the generated ACM wastes. Submit Detailed Drawings in accordance with EP 1110-1-11 and containing descriptions, and site layout to include worksite containment area(s), local exhaust systems locations, decontamination units and load-out units, other temporary waste storage facility, access tunnels, location of temporary utilities (electrical, water, sewer) and boundaries of each regulated area. When the detail sheets are not attached to this specification, the Contractor can get them from the web at: http://140.194.76.129/publications/eng-pamphlets/ep1110-1-11/toc.htm

1.4.1 Abatement Work Tasks

The specific ACM to be abated is identified within individual facility ACM Surveys contained within Part 6 of this RFP. A summary for each work task including the appropriate RESPONSE ACTION DETAIL SHEET (item to be abated and methods to be used) and SET-UP DETAIL SHEETS (containment techniques to include safety precautions and methods) is included in Table 1, "Individual Work Task Data Elements" at the end of this section.

1.4.2 Unexpected Discovery of Asbestos

For any previously untested building components suspected to contain asbestos and located in areas impacted by the work, notify the Contracting Officer (CO) who will have the option of ordering up to 100 bulk samples to be obtained at the Contractor's expense and delivered to a laboratory accredited under the National Institute of Standards and Technology (NIST) "National Voluntary Laboratory Accreditation Program (NVLAP)" and analyzed by PLM. If the asbestos content is less than 10 percent, as determined by a method other than point counting, the asbestos content shall be verified by point counting. Any additional components identified as ACM that have been approved by the CO for removal shall be

removed and will be paid for by an equitable adjustment to the contract price under the CONTRACT CLAUSE titled "changes". Sampling shall be conducted by personnel who have successfully completed the EPA Model Accreditation Plan (MAP) "Building Inspector" training course and is EPA/State- certified/licensed as a "Building Inspector".

1.4.3 Wallboard/Joint Compound

Please refer to individual facility ACM Surveys contained within Part 6 of this RFP.

1.5 SUBMITTALS

Government approval is required for submittals with a "G" designation; submittals not having a "G" designation are for Contractor Quality Control approval information only. When used, a designation following the "G" designation identifies the office that will review the submittal for the Government. Submit the following in accordance with Section 01 33 00 SUBMITTAL PROCEDURES:

SD-02 Shop Drawings
Detailed Drawings; TBD

SD-03 Product Data

Asbestos Waste Shipment Records; G
Weight Bills and Delivery Tickets; G
Encapsulants; G
Respiratory Protection Program; G
Cleanup and Disposal; G
Qualifications; G
Training Program
Licenses, Permits and Notifications; G
Asbestos Management Plan; G

SD-06 Test Reports

Exposure Assessment and Air Monitoring; G
Local Exhaust System

SD-07 Certificates

Local Exhaust System
Medical Surveillance Requirements

1.6 QUALITY ASSURANCE

In addition to detailed requirements of this specification, work performed under this contract shall comply with EM 385-1-1, applicable federal, state, and local laws, ordinances, criteria, rules and regulations regarding handling, storing, transporting, and disposing of asbestos waste materials. Matters of interpretation of standards shall be submitted to the appropriate administrative agency for resolution before starting work. Where the requirements of this specification, applicable laws, criteria, ordinances, regulations, and referenced documents vary, the most stringent requirements shall apply. The following state and local laws, rules and regulations regarding demolition, removal, encapsulation, construction alteration, repair, maintenance, renovation, spill/emergency cleanup, housekeeping, handling, storing, transporting and disposing of asbestos material apply: Illinois Dept. of Public Health.

1.6.1 Written Qualifications and Organization Report

Submit a written qualifications and organization report providing evidence of qualifications of the Contractor, Contractor's Project Supervisor, Designated Competent Person, supervisors and workers; Designated IH; independent testing laboratory; all subcontractors to be used including disposal transportation and disposal facility firms, subcontractor supervisors, subcontractor workers; and any others assigned to perform asbestos abatement and support activities. Include in the report an organization chart showing the Contractor's staff organization chain of command and reporting relationship with all subcontractors. The report shall be signed by the Contractor, the Contractor's onsite project manager, Designated Competent Person, Designated IH, designated testing laboratory and the principals of all subcontractors to be used. Include the following statement in the report: "By signing this report I certify that the personnel I am responsible for during the course of this project fully understand the contents of 29 CFR 1926.1101, 40 CFR 61, Subpart M, and the federal, state and local requirements for those asbestos abatement activities that they will be involved in."

1.6.2 Specific Requirements

Designate in writing, personnel meeting the following qualifications:

a. Asbestos Abatement Contractor: Certified/licensed [by applicable state agencies] to perform asbestos-related activities.

b. Designated Competent Person: Qualified in accordance with 29 CFR 1926.32 and 29 CFR 1926.1101, has EPA MAP "Contractor/Supervisor" training accreditation, has EPA/State certification/license as a "Contractor/Supervisor" and is experienced in the administration and supervision of asbestos abatement projects, including exposure assessment and monitoring, work practices, abatement methods, protective measures for personnel, setting up and inspecting asbestos abatement work areas, evaluating the integrity of containment barriers, placement and operation of local exhaust systems, ACM generated waste containment and disposal procedures, decontamination units installation and maintenance requirements, site safety and health requirements, notification of other employees onsite, etc. The Designated Competent Person shall be responsible for compliance with applicable federal, state and local requirements, the Contractor's Accident Prevention Plan (APP) and Asbestos Hazard Abatement Plan (AHAP). Submit the "Contractor/Supervisor" course completion certificate and the most recent certificate for required refresher training, [EPA/State certification/license] with the employee "Certificate of Worker Acknowledgment". Submit evidence that this person has a minimum of [2 years] of on-the-job asbestos abatement experience relevant to OSHA competent person requirements. **The Designated Competent Person shall be onsite at all times during the performance of abatement activities.**

c. Project and Other Supervisors: Have EPA MAP "Contractor/Supervisor" training accreditation. Submit the "Contractor/Supervisor" course completion certificate and the most recent certificate for required refresher training, EPA/State certification/license with the employee "Certificate of Worker Acknowledgment". Also submit evidence that the Project Supervisor has a minimum of 5 years of on-the-job asbestos abatement experience relevant to project supervisor responsibilities and the other supervisors have a minimum of 2 years on-the-job asbestos abatement experience commensurate with the responsibilities they will have on this project.

d. Designated Industrial Hygienist: Resume for the Industrial Hygienist (IH) selected to prepare the Contractor's AHAP, prepare and perform training, direct air monitoring and assist the Contractor's Competent Person in implementing and ensuring that safety and health requirements are complied with during the performance of all required work. The Designated IH shall be a person who is Illinois Licensed in the practice of industrial hygiene as determined and documented by the American Board of Industrial Hygiene (ABIH), has EPA MAP "Contractor/Supervisor" training accreditation, and has a minimum of 5years of comprehensive experience in planning and overseeing asbestos abatement activities. Submit the "Contractor/Supervisor" course completion certificate and the most recent certificate for required refresher training and EPA/State certification/license with the employee "Certificate of Worker Acknowledgment". The Designated IH shall be completely independent from the Contractor according to federal, state, or local regulations; that is, shall not be a Contractor's employee or be an employee or principal of a firm in a business relationship with the Contractor negating such independent status. A copy of the Designated IH's current valid ABIH certification shall be included. The Designated IH shall visit the site at least once per week for the duration of asbestos activities and shall be available for emergencies. In addition, submit resumes of additional IH's and industrial hygiene technicians (IHT) who will be assisting the Designated IH in performing onsite tasks. IHs and IHTs supporting the Designated IH shall have a minimum of 3 years of practical onsite asbestos abatement experience. Indicate the formal reporting relationship between the Designated IH and the support IHs and IHTs, the Designated Competent Person, and the Contractor.

e. Asbestos Abatement Workers: Meet the requirements contained in 29 CFR 1926.1101, 40 CFR 61, Subpart M, and other applicable federal, state and local requirements. Worker training documentation shall be provided as required on the "Certificate of Workers Acknowledgment". Training documentation is required for each employee who will perform OSHA Class I, Class II, Class III, or Class IV asbestos abatement operations. Such documentation shall be submitted on a Contractor generated form titled "Certificate of Workers Acknowledgment", to be completed for each employee in the same format and containing the same information as the example certificate at the end of this section. Training course completion certificates (initial and most recent update refresher) required by the information checked on the form shall be attached.

f. Physician: Resume of the physician who will or has performed the medical examinations and evaluations of the persons who will conduct the asbestos abatement work tasks. The physician shall be currently licensed by the state where the workers will be or have been examined, have expertise in pneumoconiosis and shall be responsible for the determination of medical surveillance protocols and for review of examination/test results performed in compliance with 29 CFR 1926.1101. The physician shall be familiar with the site's hazards and the scope of this project.

g. Independent Testing Laboratory: identify the independent testing laboratory selected to perform the sample analyses and report the results. The testing laboratory shall be completely independent from the Contractor as recognized by federal, state or local regulations. Written verification of the following criteria, signed by the testing laboratory principal and the Contractor, shall be submitted:

(1) Phase contrast microscopy (PCM): The laboratory is fully equipped and proficient in conducting PCM of airborne samples using the methods specified by 29 CFR 1926.1101, OSHA method ID-160, the most current version of NIOSH 2003-154 Method 7400 as shown in Table 3 at the end of this Section. The laboratory shall be currently judged proficient (classified as acceptable) in counting airborne asbestos samples by PCM by successful participation in each of the last 4 rounds in the American Industrial Hygiene Association (AIHA) Proficiency Analytical Testing (PAT) Program or by

participating in the AIHA PAT Program, and being judged proficient in counting samples.

(2) Polarized light microscopy (PLM): The laboratory is fully equipped and proficient in conducting PLM analyses of suspect ACM bulk samples in accordance with 40 CFR 763, Subpart E, Appendix E; the laboratory is currently accredited by NIST under the NVLAP for bulk asbestos analysis and will use analysts with demonstrated proficiency to conduct PLM analyses.

(3) Transmission electron microscopy (TEM): The laboratory is [fully equipped and proficient in conducting TEM analysis of airborne samples using the mandatory method specified by 40 CFR 763, Subpart E, Appendix E; the laboratory is currently accredited by NIST under the NVLAP for airborne sample analysis of asbestos by TEM; the laboratory will use analysts with demonstrated proficiency under NVLAP.] [proficient in conducting analysis for low asbestos concentration, enhanced analysis of floor tiles and bulk materials where multiple layers are present, using an improved EPA test method titled, "Method for the Determination of Asbestos in Bulk Building Materials".]

(4) PCM/TEM: The laboratory is fully equipped and each analyst is proficient in conducting PCM and TEM analysis of airborne samples using NIOSH 2003-154 Method 7400 PCM and NIOSH 2003-154 Method 7402 (TEM confirmation of asbestos content of PCM results) from the same filter.

h. Disposal Facility, Transporter: Written evidence that the landfill to be used is approved for asbestos disposal by the Illinois Environmental Protection Agency . Copies of signed agreements between the Contractor (including subcontractors and transporters) and the asbestos waste disposal facility to accept and dispose of all asbestos-containing waste shall be provided. The Contractor and transporters shall meet DOT requirements of 49 CFR 171, 49 CFR 172, and 49 CFR 173, as well as registration requirements of 49 CFR 107 and other applicable state or local requirements. The disposal facility shall meet the requirements of 40 CFR 61, Sections .154 or .155, as required in 40 CFR 61 150(b), and other applicable state or local requirements.

1.6.3 Federal, State or Local Citations on Previous Projects

The Contractor and all subcontractors shall submit a statement, signed by an officer of the company, containing a record of any citations issued by Federal, State or local regulatory agencies relating to asbestos activities (including projects, dates, and resolutions); a list of penalties incurred through non-compliance with asbestos project specifications, including liquidated damages, overruns in scheduled time limitations and resolutions; and situations in which an asbestos-related contract has been terminated (including projects, dates, and reasons for terminations). If there are none, a negative declaration signed by an officer of the company shall be provided.

1.6.4 Preconstruction Conference

The Contractor and the Contractor's Designated Competent Person, Project Supervisor, and Designated IH shall meet with the Contracting Officer (CO) prior to beginning work at a safety preconstruction conference to discuss the details of the Contractor's submitted APP to include the AHAP and AHAs appendices. Deficiencies in the APP will be discussed. Onsite work shall not begin until the APP has been accepted.

1.7 SAFETY

Prepare a written comprehensive site-specific Accident Prevention Plan (APP) at least 30 days prior to the preconstruction conference. The APP shall be in accordance with the format and requirements in Appendix A of EM 385-1-1. The APP shall incorporate an Asbestos Hazard Abatement Plan (AHAP), and Activity Hazard Analyses (AHAs) as separate appendices into one site-specific document. The APP shall take into consideration all the individual asbestos abatement work tasks identified in Table 1. See Section 01 35 26 GOVERNMENT SAFETY REQUIREMENTS for additional requirements.

1.7.1 Asbestos Hazard Abatement Plan Appendix

The AHAP shall be prepared for each construction phase (up to 17 individual buildings per plan) include, but not be limited to, the following:

a. The personal protective equipment to be used;
b. The location and description of regulated areas including clean and dirty areas, access tunnels, and decontamination unit (clean room, shower room, equipment room, storage areas such as load-out unit);
c. Initial exposure assessment in accordance with 29 CFR 1926.1101;
d. Level of supervision;
e. Method of notification of other employers at the worksite;
f. Abatement method to include containment and control procedures;
g. Interface of trades;
h. Sequencing of asbestos related work;
i. Storage and disposal procedures and plan;
j. Type of wetting agent and asbestos encapsulant;
k. Location of local exhaust equipment;
l. Air monitoring methods (personal, environmental and clearance);
m. Bulk sampling and analytical methods (if required);
n. A detailed description of the method to be employed in order to control the spread of ACM wastes and airborne fiber;
o. Fire and medical emergency response procedures;
p. The security procedures to be used for all regulated areas.

1.7.2 Activity Hazard Analyses Appendix

AHAs for each major phase of work, shall be submitted and updated during the project. The AHAs format shall be in accordance with Figure 1-1 of EM 385-1-1. The analysis shall define the activities to be performed for a major phase of work, identify the sequence of work, the specific hazards anticipated, and the control measures to be implemented to eliminate or reduce each hazard to an acceptable level. Work shall not proceed on that phase until the AHA has been accepted and a preparatory meeting has been conducted by the Contractor to discuss its contents with everyone engaged in the activities, including the onsite Government representatives. The AHAs shall be continuously reviewed and, when appropriate, modified to address changing site conditions or operations.

1.7.3 Local Exhaust System

Local exhaust units shall conform to AIHA Z9.2 and 29 CFR 1926.1101. Filters on local exhaust system equipment shall conform to AIHA Z9.2 and UL 586. Filter shall be UL labeled. Submit pressure differential recordings and Manufacturer's certifications showing compliance with AIHA Z9.2 for:

a. Vacuums.
b. Water filtration equipment.
c. Ventilation equipment.
d. Other equipment required to contain airborne asbestos fibers.

1.8 SECURITY

A fenced and locked security area shall be provided for each regulated area. A log book shall be kept documenting entry into and out of the regulated area. Entry into regulated areas shall only be by personnel authorized by the Contractor and the CO. Personnel authorized to enter regulated areas shall be trained, medically evaluated, and wear the required personal protective equipment.

1.8.1 Licenses, Permits and Notifications

Obtain necessary licenses, permits and notifications in conjunction with the project's asbestos abatement, transportation and disposal actions and timely notification furnished of such actions as required by federal, state, regional, and local authorities. The Contractor shall coordinate with Government (PWD GL Designated POC) prior to notifying Illinois Department of Health (IDPH), the state's environmental protection agency responsible for asbestos air emissions, and state OSHA program, in writing, at least 10 days prior to the commencement of work, in accordance with 40 CFR 61, Subpart M, and state and local requirements to include the mandatory "Notification of Demolition and Renovation Record" form and other required notification documents. Notification shall be by Certified Mail, Return Receipt Requested. Furnish copies of the receipts to the CO, in writing, prior to the commencement of work. Local fire department shall be notified 3 days before fireproofing material is removed from a building and the notice shall specify whether or not the material contains asbestos. The Contractor is responsible for the associated fees/costs for licenses, permits, and notifications.

1.8.2 Regulated Areas

All Class I, II, and III asbestos work shall be conducted within regulated areas. The regulated area shall be demarcated to minimize the number of persons within the area and to protect persons outside the area from exposure to airborne asbestos. Control access to regulated areas, ensure that only authorized personnel enter, and verify that Contractor required medical surveillance, training and respiratory protection program requirements are met prior to allowing entrance.

1.8.3 Warning Signs and Tape

Warning signs and tape printed in English shall be provided at the regulated boundaries and entrances to regulated areas. Signs shall be located to allow personnel to read the signs and take the necessary protective steps required before entering the area. Warning signs will display the following legend in the lower panel:

DANGER
ASBESTOS
CANCER AND LUNG DISEASE
HAZARD AUTHORIZED PERSONNEL
ONLY
[RESPIRATORS AND PROTECTIVE CLOTHING ARE REQUIRED IN THIS AREA]

1.8.4 Warning Labels

Warning labels shall be affixed to all asbestos disposal containers, asbestos materials, scrap, waste debris, and other products contaminated with asbestos. Containers with preprinted warning labels conforming to requirements are acceptable. See DETAIL SHEET 14,

1.9 MEDICAL SURVEILLANCE REQUIREMENTS

Medical surveillance requirements shall conform to 29 CFR 1926.1101. Asbestos workers shall be enrolled in a medical surveillance program that meets 29 CFR 1926.1101 (m) requirements and other pertinent state or local requirements. This requirement shall have been satisfied within the last 12 months. Submit required medical certification and the Physician's written opinion.

1.9.1 Respiratory Protection Program

The Contractor's Designated IH shall establish in writing, and implement a respiratory protection program in accordance with 29 CFR 1926.1101 and 29 CFR 1910.134. The Contractor's Designated IH shall establish minimum respiratory protection requirements based on measured or anticipated levels of airborne asbestos fiber concentrations.

1.9.2 Respiratory Fit Testing

The Contractor's Designated IH shall conduct a qualitative or quantitative fit test conforming to Appendix A of 29 CFR 1910.134 for each worker required to wear a respirator, and any authorized visitors who enter a regulated area where respirators are required to be worn. A respirator fit test shall be performed prior to initially wearing a respirator and every 12 months thereafter. If physical changes develop that will affect the fit, a new fit test shall be performed. Functional fit checks shall be performed each time a respirator is put on and in accordance with the manufacturer's recommendation.

1.9.3 Respirator Selection and Use Requirements

Provide respirators, and ensure that they are used as required by 29 CFR 1926.1101 and in accordance with CGA G-7 and the manufacturer's recommendations. Respirators shall be approved by the National Institute for Occupational Safety and Health NIOSH, under the provisions of 42 CFR 84, for use in environments containing airborne asbestos fibers. For air-purifying respirators, the particulate filter shall be high-efficiency particulate air (HEPA)/(N-,R-,P-100). The initial respirator selection and the decisions regarding the upgrading or downgrading of respirator type shall be made by the Contractor's Designated IH based on the measured or anticipated airborne asbestos fiber concentrations to be encountered.

1.9.4 Personal Protective Equipment

Three complete sets of personal protective equipment shall be made available to the CO and authorized visitors for entry to the regulated area. The CO and authorized visitors shall be provided with training equivalent to that provided to Contractor employees in the selection, fitting, and use of personal protective equipment and the site safety and health requirements. Provide workers with personal protective clothing and equipment and ensure that it is worn properly. The Designated IH and Designated Competent Person shall select and approve all the required personal protective clothing and equipment.

1.9.5 Whole Body Protection

Personnel exposed to or having the potential to be exposed to airborne concentrations of asbestos that exceed the PELs, or for all OSHA Classes of work for which a required negative exposure assessment is not produced, shall be provided with whole body protection and such protection shall be worn properly. Disposable whole body protection shall be disposed of as asbestos-contaminated waste upon exiting from the regulated area. Reusable whole body protection worn shall be either disposed of as asbestos contaminated waste upon exiting from the regulated area or be properly laundered in accordance with 29 CFR 1926.1101. The Contractor's Designated Competent Person, in consultation with the Designated IH, has the authority to take immediate action to upgrade or downgrade whole body protection when there is an immediate danger to the health and safety of the wearer.

1.9.5.1 Coveralls

Coveralls with a zipper front shall be provided. Sleeves shall be secured at the wrists, and foot coverings secured at the ankles. See DETAIL SHEET 13.

1.9.5.2 Gloves

Gloves shall be provided to protect the hands where there is the potential for hand injuries (i.e., scrapes, punctures, cuts, etc.).

1.9.5.3 Foot Coverings

Cloth socks shall be provided and worn next to the skin. Footwear, as required by OSHA and EM 385-1- 1, that is appropriate for safety and health hazards in the area shall be worn. Reusable footwear removed from the regulated area shall be thoroughly decontaminated or disposed of as ACM waste.

1.9.5.4 Head Covering

Hood type [disposable] [reusable] head covering shall be provided. In addition, protective head gear (hard hats) shall be provided as required. Hard hats shall only be removed from the regulated area after being thoroughly decontaminated.

1.9.5.5 Protective Eye Wear

Eye protection shall be provided, when operations present a potential eye injury hazard, and shall meet the requirements of ANSI/ISEA Z87.1.

1.10 HYGIENE

Establish a decontamination area for employees, material and equipment. Ensure that employees enter and exit the regulated area through the decontamination area.

1.10.1 3-Stage Decontamination Area

The decontamination unit shall have an equipment room and a clean room separated by a shower that complies with 29 CFR 1910.141, unless the Contractor can demonstrate that such facilities are not feasible. Equipment and surfaces of containers filled with ACM shall be cleaned prior to removing them from the equipment room or area. Two separate lockers shall be provided for each asbestos worker, one in the equipment room and one in the clean room. Provide a minimum of 2 showers. Wastewater shall be collected and filtered to remove asbestos contamination. Filters and residue shall be disposed of as asbestos contaminated material. Filtered water shall be discharged to the sanitary sewer system. Wastewater filters shall be installed in series with the first stage pore size of 20 microns and the second stage pore size of 5 microns. The floor of the decontamination unit's clean room shall be kept dry and clean at all times. Proper housekeeping and hygiene requirements shall be maintained. Soap and towels shall be provided for showering, washing and drying. Any cloth towels provided shall be disposed of as ACM waste or shall be laundered in accordance with 29 CFR 1926.1101.

1.10.2 Load-Out Unit

A temporary load-out unit that is adjacent and connected to the regulated area shall be provided. The load-out unit shall be attached in a leak-tight manner to each regulated area.

1.10.3 Single Stage Decontamination Area

A decontamination area (equipment room/area) shall be provided for Class I work involving less than 7.5 m 25 feet or 0.9 square meters 10 square feet of TSI or surfacing ACM, and for Class II and Class III asbestos work operations where exposures exceed the PELs or where there is no negative exposure assessment. The equipment room or area shall be adjacent to the regulated area for the decontamination of employees, material, and their equipment which could be contaminated with asbestos. The area shall be covered by an impermeable drop cloth on the floor or horizontal working surface. The area must be of sufficient size to accommodate cleaning of equipment and removing personal protective equipment without spreading contamination beyond the area.

1.10.4 Decontamination Area Exit Procedures

Ensure that the following procedures are

followed:

a. Before leaving the regulated area, remove all gross contamination and debris from work

clothing using a HEPA vacuum.

b. Employees shall remove their protective clothing in the equipment room and deposit the clothing in labeled impermeable bags or containers (see Detail Sheets 9A and 14) for disposal and/or laundering.

c. Employees shall not remove their respirators until showering.

d. Employees shall shower prior to entering the clean room. If a shower has not been located between the equipment room and the clean room or the work is performed outdoors, ensure that employees engaged in Class I asbestos jobs: a) Remove asbestos contamination from their work suits in the equipment room or decontamination area using a HEPA vacuum before proceeding to a shower that is not adjacent to the work area; or b) Remove their contaminated work suits in the equipment room, without cleaning worksuits, and proceed to a shower that is not adjacent to the work area.

1.10.5 Smoking

Smoking, if allowed by the Contractor, shall only be permitted in designated areas approved by the CO.

1.11 TRAINING PROGRAM

Establish and submit a training program as specified by EPA MAP, training requirements at 40 CFR 763, the State of Illinois regulation no. 225 ILCS 207, and OSHA requirements at 29 CFR 1926.1101(k)(9).

Contractor employees shall complete the required training for the type of work they are to perform and such training shall be documented and provided to the CO. These include:

a. Class I and II operations 32 hours Asbestos Worker Training
b. Class II generic removal 8 hour Asbestos Worker Training
c. Class III operations 16 hour O & M Training
d. Class IV operations 2 hour Awareness Training

Prior to commencement of work the Contractor's Designated IH and Competent Person shall instruct each worker about:

a. The hazards and health effects of the specific types of ACM to be abated; and
b. The content and requirements of the Contractor's APP to include the AHAP and AHAs and site- specific safety and health precautions.

PART 2: PRODUCTS

2.1 ENCAPSULANTS

Encapsulants shall conform to USEPA requirements, shall contain no toxic or hazardous substances and no solvent. Submit certificates stating that encapsulants meet the applicable specified

performance requirements.

2.2 ENCASEMENT PRODUCTS

Encasement shall consist of primary cellular polymer coat, polymer finish coat, and any other finish coat as approved by the CO.

2.3 RECYCLABLE MATERIALS

Recyclable materials shall conform to EPA requirements in accordance with Section 01 62 35 RECYCLED/RECOVERED MATERIALS.

2.4 EXPENDABLE SUPPLIES

2.4.1 Glovebag

Glovebags shall be provided as described in 29 CFR 1926.1101 and SET-UP DETAIL SHEET 10. The glovebag assembly shall be 0.15 mm 6 mil thick plastic, prefabricated and seamless at the bottom with preprinted OSHA warning label.

2.4.2 Duct Tape

Use only Industrial grade duct tape of appropriate widths suitable for bonding sheet plastic and disposal container.

2.4.3 Disposal Containers

Leak-tight (defined as solids, liquids, or dust that cannot escape or spill out) disposal containers shall be provided for ACM wastes as required by 29 CFR 1926.1101 and DETAIL SHEETS 9A, 9B, 9C and 14. Disposal containers can be in the form of:

a. Disposal Bags

b. Fiberboard Drums

c. Cardboard Boxes

2.4.4 Sheet Plastic

Sheet plastic shall be polyethylene of 0.15 mm 6 mil minimum thickness and shall be provided in the largest sheet size necessary to minimize seams. Film shall conform to ASTM D 4397, except as specified below:

2.4.4.1 Flame Resistant

Where a potential for fire exists, flame-resistant sheets shall be provided. Film shall conform to the requirements of NFPA 701.

2.4.4.2 Reinforced

Reinforced sheets shall be provided where high skin strength is required, such as where it constitutes the only barrier between the regulated area and the outdoor environment. The sheet stock shall consist of translucent, nylon-reinforced or woven-polyethylene thread laminated between 2 layers of polyethylene film. Film shall meet flame resistant standards of NFPA 701.

2.4.5 Mastic-removing Solvent

Mastic-removing solvent shall be nonflammable and shall not contain methylene chloride, glycol ether, or halogenated hydrocarbons. Solvents used onsite shall have a flash point greater than 60 degrees C 140 degrees F.

2.4.6 Leak-tight Wrapping

Two layers of 0.15 mm 6 mil minimum thick polyethylene sheet stock shall be used for the containment of removed asbestos-containing components or materials such as reactor vessels, large tanks, boilers, insulated pipe segments and other materials too large to be placed in disposal bags as described in DETAIL SHEET 9B. Upon placement of the ACM component or material, each layer shall be individually leak-tight sealed with duct tape.

2.4.7 Viewing Inspection Window

Where feasible, a minimum of 1 clear, 3 mm 1/8 inch thick, acrylic sheet, 450 by 610 mm 18 by 24 inches, shall be installed as a viewing inspection window at eye level on a wall in each containment enclosure. The windows shall be sealed leak-tight with industrial grade duct tape.

2.4.8 Wetting Agents

Removal encapsulant (a penetrating encapsulant) shall be provided when conducting removal abatement activities that require a longer removal time or are subject to rapid evaporation of amended water. The removal encapsulant shall be capable of wetting the ACM and retarding fiber release during disturbance of the ACM greater than or equal to that provided by amended water. Performance requirements for penetrating encapsulants are specified in paragraph 2.1 ENCAPSULANTS above.

2.4.9 Strippable Coating

Strippable coating in aerosol cans shall be used to adhere to surfaces and to be removed cleanly by stripping, at the completion of work.

2.5 EQUIPMENT

2.5.1 Scales

Scales used for measurement shall be public scales. Weighing shall be at a point nearest the work at which a public scale is available. Scales shall be standard truck scales of the beam type; scales shall be equipped with the type registering beam and an "over and under" indicator; and shall be capable

of accommodating the entire vehicle. Scales shall be tested, approved and sealed by an inspector of the State of Illinois. Vehicles used for hauling ACM shall be weighed empty daily at such time as directed and each vehicle shall bear a plainly legible identification mark.

2.5.2 Tools

Vacuums shall be equipped with HEPA filters, of sufficient capacity and necessary capture velocity at the nozzle or nozzle attachment to efficiently collect, transport and retain the ACM waste material. Power tools shall not be used to remove ACM unless the tool is equipped with effective, integral HEPA filtered exhaust ventilation capture and collection system. Reusable tools shall be thoroughly decontaminated prior to being removed from regulated areas.

2.5.3 Rental Equipment

If rental equipment is to be used, written notification shall be provided to the rental agency, concerning the intended use of the equipment, the possibility of asbestos contamination of the equipment and the steps that will be taken to decontaminate such equipment.

2.5.4 Air Monitoring Equipment

The Contractor's Designated IH shall approve air monitoring equipment. The equipment shall include, but shall not be limited to:

a. High-volume sampling pumps that can be calibrated and operated at a constant airflow up to 16 liters per minute.

b. Low-volume, battery powered, body-attachable, portable personal pumps that can be calibrated to a constant airflow up to approximately 3.5 liters per minute, and a self-contained rechargeable power pack capable of sustaining the calibrated flow rate for a minimum of 10 hours. The pumps shall also be equipped with an automatic flow control unit which shall maintain a constant flow, even as filter resistance increases due to accumulation of fiber and debris on the filter surface.

c. Single use standard 25 mm diameter cassette, open face, 0.8 micron pore size, mixed cellulose ester membrane filters and cassettes with 50 mm electrically conductive extension cowl, and shrink bands for personal air sampling.

[d. Single use standard 25 mm diameter cassette, open face, 0.45 micron pore size, mixed cellulose ester membrane filters and cassettes with 50 mm electrically conductive cowl, and shrink bands when conducting environmental area sampling using NIOSH 2003-154 Methods 7400 and 7402, (and the transmission electric microscopy method specified at 40 CFR 763 if required).]

e. A flow calibrator capable of calibration to within plus or minus 2 percent of reading over a temperature range of minus 20 to plus 60 degrees C minus 4 to plus 140 degrees F and traceable to a NIST primary standard.

PART 3: EXECUTION

3.1 GENERAL REQUIREMENTS

Use the engineering controls and work practices required in 29 CFR 1926.1101(g) in all operations regardless of the levels of exposure. Personnel shall wear and utilize protective clothing and equipment. Do not permit eating, smoking, drinking, chewing or applying cosmetics in the regulated area. Personnel of other trades, shall not be exposed at any time to airborne concentrations of asbestos unless all the administrative and personal protective provisions of the Contractor's APP are complied with. Power to the regulated area shall be locked-out and tagged in accordance with 29 CFR 1910.147, and temporary electrical service with ground fault circuit interrupters shall be provided as needed. Temporary electrical service shall be disconnected when necessary for wet removal. Stop abatement work in the regulated area immediately when the airborne total fiber concentration: (1) equals or exceeds 0.01 f/cc, or the pre-abatement concentration, whichever is greater, outside the regulated area; or (2) equals or exceeds 1.0 f/cc inside the regulated area. Correct the condition to the satisfaction of the CO, including visual inspection and air sampling. Work shall resume only upon notification by the CO. Corrective actions shall be documented.

3.2 PROTECTION OF ADJACENT WORK OR AREAS TO REMAIN

Perform asbestos abatement without damage to or contamination of adjacent work or area. Where such work or area is damaged or contaminated, it shall be restored to its original condition or decontaminated at no expense to the Government. When spills occur, work shall stop in all affected areas immediately and the spill shall be cleaned. When satisfactory visual inspection and air sampling analysis results are obtained and have been evaluated by the Contractor's Designated IH and the CO, work shall proceed.

3.3 OBJECTS

3.3.1 Removal of Mobile Objects

The Government will remove mobile furnishings and equipment from the area of work before work begins. These objects shall be removed to an area or site designated by the government

3.3.2 Stationary Objects

Stationary objects, furniture, and equipment to be determined, shall remain in place and covered with 2 layers of polyethylene and edges sealed with duct tape.

3.4 BUILDING VENTILATION SYSTEM AND CRITICAL BARRIERS

Building ventilation system supply and return air ducts in a regulated area shall be shut down and isolated by lockable switch or other positive means in accordance with 29 CFR 1910.147, and isolated by airtight seals to prevent the spread of contamination throughout the system. The airtight seals shall consist of air-tight rigid covers for building ventilation supply and exhaust grills where the ventilation system is required to remain in service during abatement. Edges to wall, ceiling and floor surfaces shall be sealed with industrial grade duct tape.

3.5 PRECLEANING

Surfaces shall be cleaned by HEPA vacuum and adequately wet wiped prior to establishment of containment.

3.6 METHODS OF COMPLIANCE

3.6.1 Mandated Practices

The specific abatement techniques and items identified shall be detailed in the Contractor's AHAP. Use the following engineering controls and work practices in all operations, regardless of the levels of exposure:

a. Vacuum cleaners equipped with HEPA filters.

b. Wet methods or wetting agents except where it can be demonstrated that the use of wet methods is unfeasible due to the creation of electrical hazards, equipment malfunction, and in roofing.

c. Prompt clean-up and disposal.

d. Inspection and repair of polyethylene.

e. Cleaning of equipment and surfaces of containers prior to removing them from the equipment room or area.

3.6.2 Control Methods

Use the following control methods:

a. Local exhaust ventilation equipped with HEPA filter;

b. Enclosure or isolation of processes producing asbestos dust;

c. Where the feasible engineering and work practice controls are not sufficient to reduce employee exposure to or below the PELs, use them to reduce employee exposure to the lowest levels attainable and shall supplement them by the use of respiratory protection.

3.6.3 Unacceptable Practices

The following work practices shall not be used:

a. High-speed abrasive disc saws that are not equipped with point of cut ventilator or enclosures with HEPA filtered exhaust air.

b. Compressed air used to remove asbestos containing materials, unless the compressed air is used in conjunction with an enclosed ventilation system designed to capture the dust cloud created by the compressed air.

c. Dry sweeping, shoveling, or other dry clean up.

d. Employee rotation as a means of reducing employee exposure to asbestos.

3.6.4 Class I Work Procedures

In addition to requirements of paragraphs Mandated Practices and Control Methods, the following engineering controls and work practices shall be used:

a. A Competent Person shall supervise the installation and operation of the control methods.

b. For jobs involving the removal of more than 7.5 m 25 feet or 0.9 square m 10 square feet of TSI or surfacing material, place critical barriers over all openings to the regulated area.

c. HVAC systems shall be isolated in the regulated area by sealing with a double layer of plastic or air- tight rigid covers.

d. Impermeable dropcloths (0.15 mm 6 mil or greater thickness) shall be placed on surfaces beneath all removal activity.

e. Where a negative exposure assessment has not been provided or where exposure monitoring shows the PEL was exceeded, the regulated area shall be ventilated with a HEPA unit and employees must use PPE.

3.6.5 Specific Control Methods for Class I Work

3.6.5.1 Negative Pressure Enclosure (NPE) System

The NPE system shall provide at least 4 air changes per hour inside the containment. The local exhaust unit equipment shall be operated 24 hours per day until the containment is removed. The NPE shall be smoke tested for leaks at the beginning of each shift and be sufficient to maintain a minimum pressure differential of minus 0.5 mm 0.02 inch of water column relative to adjacent, unsealed areas. Pressure differential shall be monitored continuously, 24 hours per day, with an automatic manometric recording instrument and Records shall be provided daily on the same day collected to the CO. The CO shall be notified immediately if the pressure differential falls below the prescribed minimum. The building ventilation system shall not be used as the local exhaust system for the regulated area. The NPE shall terminate outdoors unless an alternate arrangement is allowed by the CO. All filters used shall be new at the beginning of the project and shall be periodically changed as necessary and disposed of as ACM waste.

3.6.5.2 Glovebag Systems

Glovebag systems shall be used without modification, smoke-tested for leaks, and completely cover the circumference of pipe or other structures where the work is to be done. Glovebags shall be used only once and shall not be moved. Glovebags shall not be used on surfaces that have temperatures exceeding 66 degrees C 150 degrees F. Prior to disposal, glovebags shall be collapsed using a HEPA vacuum. Before beginning the operation, loose and friable material adjacent to the glovebag operation shall be wrapped and sealed in 2 layers of plastic or otherwise rendered intact. At least 2 persons shall perform glovebag removal. Asbestos regulated work areas shall be established as shown on [detailed drawings and plans] [Table 1] for glovebag abatement. Designated boundary limits for the asbestos work shall be established with rope or other continuous barriers and all other requirements for asbestos control areas shall be maintained, including area signage and boundary

warning tape as specified in SET-UP DETAIL SHEET 11.

a. Attach HEPA vacuum systems to the bag to prevent collapse during removal of ACM.

b. The negative pressure glove boxes shall be fitted with gloved apertures and a bagging outlet and constructed with rigid sides from metal or other material which can withstand the weight of the ACM and water used during removal. A negative pressure shall be created in the system using a HEPA filtration system. The box shall be smoke tested for leaks prior to each use.

3.6.5.3 Mini-Enclosures

Mini-containment (small walk-in enclosure) to accommodate no more than 2 persons, may be used if the disturbance or removal can be completely contained by the enclosure. The mini- enclosure shall be inspected for leaks and smoke tested before each use. Air movement shall be directed away from the employee's breathing zone within the mini-enclosure.

3.6.5.4 Wrap and Cut Operation

Prior to cutting pipe, the asbestos-containing insulation shall be wrapped with polyethylene and securely sealed with duct tape to prevent asbestos becoming airborne as a result of the cutting process. The following steps shall be taken: install glovebag, strip back sections to be cut 150 mm 6 inches from point of cut, and cut pipe into manageable sections.

3.6.6 Class II Work

In addition to the requirements of paragraphs Mandated Practices and Control Methods, the following engineering controls and work practices shall be used:

a. A Competent Person shall supervise the work.

b. For indoor work, critical barriers shall be placed over all openings to the regulated area.

c. Impermeable dropcloths shall be placed on surfaces beneath all removal activity.

3.6.7 Specific Control Methods for Class II Work

3.6.7.1 Vinyl and Asphalt Flooring Materials

When removing vinyl and asphalt flooring materials which contain ACM, resilient sheeting shall be removed by adequately wet methods. Tiles shall be removed intact (if possible); wetting is not required when tiles are heated and removed intact. Flooring or its backing shall not be sanded. Scraping of residual adhesive and/or backing shall be performed using wet methods. Mechanical chipping is prohibited unless performed in a negative pressure enclosure. Dry sweeping is prohibited. Use vacuums equipped with HEPA filter, disposable dust bag, and metal floor tool (no brush) to clean floors.

3.6.7.2 Roofing Material

When removing roofing materials which contain ACM as described in 29 CFR 1926.1101(g)(8)(ii), use the following practices. Roofing material shall be removed in an intact state. Wet methods shall be used to remove roofing materials that are not intact, or that will be rendered not intact during removal, unless such wet methods are not feasible or will create safety hazards. When removing built-up roofs, with asbestos-containing roofing felts and an aggregate surface, using a power roof cutter, all dust resulting from the cutting operations shall be collected by a HEPA dust collector, or shall be HEPA vacuumed by vacuuming along the cut line. Asbestos-containing roofing material shall not be dropped or thrown to the ground, but shall be lowered to the ground via covered, dust-tight chute, crane, hoist or other method approved by the CO. Any ACM that is not intact shall be lowered to the ground as soon as practicable, but not later than the end of the work shift. While the material remains on the roof it shall be kept wet or placed in an impermeable waste bag or wrapped in plastic sheeting. Intact ACM shall be lowered to the ground as soon as practicable, but not later than the end of the work shift. Unwrapped material shall be transferred to a closed receptacle. Critical barriers shall be placed over roof level heating and ventilation air intakes.

3.6.7.3 Cementitious Siding and Shingles or Transite Panels

When removing cementitious asbestos-containing siding, shingles or transite panels, intentionally cutting, abrading or breaking is prohibited. Each panel or shingle shall be sprayed with amended water prior to removal. Nails shall be cut with flat, sharp instruments. Unwrapped or unbagged panels or shingles shall be immediately lowered to the ground via covered dust-tight chute, crane or hoist, or placed in an impervious waste bag or wrapped in plastic sheeting and lowered to the ground no later than the end of the work shift.

3.6.7.4 Gaskets

Gaskets shall be thoroughly wetted with amended water prior to removal and immediately placed in a disposal container. If a gasket is visibly deteriorated and unlikely to be removed intact, removal shall be undertaken within a glovebag. Any scraping to remove residue shall be performed wet.

3.6.8 Specific Control Methods for Class III Work

Class III asbestos work shall be conducted using engineering and work practice controls which minimize the exposure to employees performing the asbestos work. The work shall be performed using wet methods and, to the extent feasible, using local exhaust. Use impermeable drop cloths and shall isolate the operation, using mini-enclosures or glovebag systems, where the disturbance involves drilling, cutting, abrading, sanding, chipping, breaking, or sawing of TSI or surfacing material.

3.6.9 Specific Control Methods for Class IV Work

Class IV jobs shall be conducted using wet methods and HEPA vacuums. Employees cleaning up debris and waste in a regulated area where respirators are required shall wear the selected respirators.

3.6.10 Methods for Asphaltic Wrap

Removal or disturbance of pipeline asphaltic wrap shall be performed using wet methods.

3.6.11 Class I Asbestos Response Action (Partial)

Storage Tank and Boiler Breeching Insulation: Storage tanks and boilers shall be valved off an allowed a sufficient amount of time to cool down prior to abatement work. Insulation shall be sprayed with a mist of amended water or removal encapsulant. Amended water or removal encapsulant shall be allowed to saturate material to substrate. Cover jackets shall be slit at seams, and sections removed and hand-placed in a polyethylene disposable bag. Exposed surfaces shall be continuously sprayed with amended water to minimize airborne dust. Insulation on tanks and boiler breeching shall not be allowed to drop to the floor. Lagging on piping and insulation on fittings shall be removed. A penetrating encapsulant shall be sprayed on all exposed tank, boiler and boiler breeching surfaces. **NOTE: A determination of friability and logistics of intact removal/disposal shall be made prior to commencement of operations.**

3.7 FINAL CLEANING AND VISUAL INSPECTION

After completion of all asbestos removal work (e.g., the gross amounts of asbestos have been removed from every surface) any remaining visible accumulations of asbestos shall be collected. For all classes of indoor asbestos abatement projects a final cleaning shall be performed using HEPA vacuum and wet cleaning of all exposed surfaces and objects in the regulated area. Upon completion of the cleaning, conduct a visual pre-inspection of the cleaned area in preparation for a final inspection before final air clearance monitoring. The Contractor and the CO shall conduct a final visual inspection of the cleaned regulated area in accordance with ASTM E 1368 and document the results on the Final Cleaning and Visual Inspection as specified on the SET-UP DETAIL SHEET 19. If the CO rejects the clean regulated area as not meeting final cleaning requirements, reclean as necessary and have a follow-on inspection conducted with the CO. Recleaning and follow-up reinspection shall be at the Contractor's expense.

3.8 LOCKDOWN

Prior to removal of plastic barriers and after final visual inspection, a (lockdown) encapsulant shall be spray applied to ceiling, walls, floors, and other surfaces in the regulated area.

3.9 EXPOSURE ASSESSMENT AND AIR MONITORING

3.9.1 General Requirements

a. Exposure assessment, air monitoring and analysis of airborne concentration of asbestos fibers shall be performed in accordance with 29 CFR 1926.1101, and the Contractor's air monitoring plan. Results of breathing zone samples shall be posted at the job site and made available to the CO. Submit all documentation regarding initial exposure assessments, negative exposure assessments, and air-monitoring results.

b. Worker Exposure.

(1) The Contractor's Designated IH shall collect samples representative of the exposure of each employee who is assigned to work within a regulated area. Breathing zone samples shall be taken for at least 25 percent of the workers in each shift, or a minimum of 2, whichever is greater. Air monitoring results at the 95 percent confidence level shall be calculated as shown in Table 2 at the end of this section.

(2) The contractor will provide an onsite independent testing laboratory with qualified analysts and appropriate equipment to conduct sample analyses of air samples using the methods prescribed in 29 CFR 1926.1101, to include NIOSH 2003-154 Method 7400.

(3) Workers shall not be exposed to an airborne fiber concentration in excess of 1.0 f/cc, as averaged over a sampling period of 30 minutes. Should a personal excursion concentration of 1.0 f/cc expressed as a 30-minute sample occur inside a regulated work area, stop work immediately, notify the Contracting Officer, and implement additional engineering controls and work practice controls to reduce airborne fiber levels below prescribed limits in the work area. Do not restart work until authorized by the CO.

c. Environmental Exposure

(1) All environmental air monitoring shall be performed by the Contractor's Designated IH. Air monitoring operations should be coordinated with the CO.

(2) Environmental and final clearance air monitoring shall be performed using NIOSH 2003-154 Method 7400 (PCM) with optional confirmation of results by [OSHA] [or] [EPA] TEM.

(3) For environmental and final clearance, air monitoring shall be conducted at a sufficient velocity and duration to establish the limit of detection of the method used at 0.005 f/cc.

(4) When confirming asbestos fiber concentrations (asbestos f/cc) from environmental and final clearance samples, use TEM in accordance with NIOSH 2003-154 Method 7402. When such confirmation is conducted, it shall be from the same sample filter used for the NIOSH 2003-154 Method 7400 PCM analysis. All confirmation of asbestos fiber concentrations, using NIOSH 2003-154 Method 7402, shall be at the Contractor's expense.

(5) Monitoring may be duplicated by the Government at the discretion of the CO and at the Government's expense.

(6) Maintain a fiber concentration inside a regulated area less than or equal to 0.1 f/cc expressed as an 8 hour, time-weighted average (TWA) during the conduct of the asbestos abatement.

(7) At the discretion of the Contracting Officer, fiber concentration may exceed 0.1 f/cc but shall not exceed 1.0 f/cc expressed as an 8-hour TWA. Should an environmental concentration of 1.0 f/cc expressed as an 8-hour TWA occur inside a regulated work area, stop work immediately, notify the Contracting Officer, and implement additional engineering controls and work practice controls to reduce airborne fiber levels below prescribed limits in the work area. Work shall not restart until authorized by the CO.

3.9.2 Initial Exposure Assessment

The Contractor's Designated IH shall conduct an exposure assessment immediately before or at the initiation of an asbestos abatement operation to ascertain expected exposures during that operation. The assessment shall be completed in time to comply with the requirements, which are triggered by exposure data or the lack of a negative exposure assessment, and to provide information necessary to assure that all control systems planned are appropriate for that operation. The assessment shall take into consideration monitoring results and all observations, information or calculations which indicate employee exposure to asbestos, including any previous monitoring conducted in the workplace, or of the operations of the Contractor which indicate the levels of airborne asbestos likely to be encountered on the job. For Class I asbestos work, until the employer conducts exposure monitoring and documents that employees on that job will not be exposed in excess of PELs, or otherwise makes a negative exposure assessment, presume that employees are exposed in excess of the PEL-TWA and PEL-Excursion Limit.

3.9.3 Negative Exposure Assessment

Provide a negative exposure assessment for the specific asbestos job which will be performed within 45 days of the initiation of the project and conform to the following criteria:

a. Objective Data: Objective data demonstrating that the product or material containing asbestos minerals or the activity involving such product or material cannot release airborne fibers in concentrations exceeding the PEL-TWA and PEL-Excursion Limit under those work conditions having the greatest potential for releasing asbestos.

b. Prior Asbestos Jobs: Where the Contractor has monitored prior asbestos jobs for the PEL and the PEL-Excursion Limit within 12 months of the current job, the monitoring and analysis were performed in compliance with asbestos standard in effect; the data were obtained during work operations conducted
under workplace conditions closely resembling the processes, type of material, control methods, work practices, and environmental conditions used and prevailing in the Contractor's current operations; the operations were conducted by employees whose training and experience are no more extensive than that of employees performing the current job; and these data show that under the conditions prevailing and which will prevail in the current workplace, there is a high degree of certainty that the monitoring covered exposure from employee exposures will not exceed the PEL-TWA and PEL-Excursion Limit.

c. Initial Exposure Monitoring: The results of initial exposure monitoring of the current job, made from breathing zone air samples that are representative of the 8-hour PEL-TWA and 30-minute short-term exposures of each employee. The monitoring covered exposure from operations which are most likely during the performance of the entire asbestos job to result in exposures over the PELs.

3.9.4 Independent Environmental Monitoring

The Contractor shall retain an independent air monitoring firm to perform final clearance air monitoring. The air monitoring Contractor has been provided a copy of the contract that includes this abatement work. The abatement Contractor will provide the air monitoring Contractor with an up-

to-date copy of the accepted AHAP, APP and pertinent detailed drawings. The air monitoring Contractor is required to comply with the abatement Contractor's safety and health requirements. The abatement Contractor will coordinate all onsite activities with the air monitoring Contractor, the COR, and other affected parties as directed by the COR. The abatement Contractor will provide the air monitoring Contractor with an up-to-date schedule of abatement Contractor work activities. The air monitoring Contractor will coordinate with the abatement Contractor and the COR during the performance of Government required air monitoring. The abatement Contractor is responsible for performing exposure assessment and personal air monitoring of abatement Contractor's work. The air monitoring Contractor is responsible for performing these tasks for its employee.

3.9.5 Preabatement Environmental Air Monitoring

Preabatement environmental air monitoring shall be established three days prior to the masking and sealing operations for each regulated area to determine background concentrations before abatement work begins. As a minimum, preabatement air samples shall be collected using NIOSH 2003-154 Method 7400, PCM at these locations: outside the building; inside the building, but outside the regulated area perimeter; and inside each regulated work area. One sample shall be collected for every 2,000 square feet of floor space. At least 2 samples shall be collected outside the building: at the exhaust of the HEPA unit; and downwind from the abatement site. The PCM samples shall be analyzed within 24 hours; and if any result in fiber concentration greater than 0.01 f/cc, asbestos fiber concentration shall be confirmed using NIOSH 2003-154 Method 7402 (TEM).

3.9.6 Environmental Air Monitoring During Abatement

Until an exposure assessment is provided to the CO, environmental air monitoring shall be conducted at locations and frequencies that will accurately characterize any evolving airborne asbestos fiber concentrations. The assessment shall demonstrate that the product or material containing asbestos minerals, or the abatement involving such product or material, cannot release airborne asbestos fibers in concentrations exceeding 0.01 f/cc as a TWA under those work conditions having the greatest potential for releasing asbestos. The monitoring shall be at least once per shift at locations including, but not limited to, close to the work inside a regulated area; preabatement sampling locations; outside entrances to a regulated area; close to glovebag operations; representative locations outside of the perimeter of a regulated area; inside clean room; and at the exhaust discharge point of local exhaust system ducted to the outside of a containment (if used). If the sampling outside regulated area shows airborne fiber levels have exceeded background or 0.01 f/cc, whichever is greater, work shall be stopped immediately, and the Contracting Officer notified. The condition causing the increase shall be corrected. Work shall not restart until authorized by the CO.

3.9.7 Final Clearance Air Monitoring

The Contractor's Designated IH shall conduct final clearance air monitoring using aggressive air sampling techniques as defined in 40 CFR 763, Subpart E, Appendix A, Unit III, TEM Method B.7(d-f) and Table 4 of this section for all indoor asbestos abatement projects. Clearance air monitoring is not required for outside work or for soil cleanups.

3.9.7.1 Final Clearance Requirements, NIOSH PCM Method

For PCM sampling and analysis using NIOSH 2003-154 Method 7400, the fiber concentration inside the

abated regulated area, for each airborne sample, shall be less than 0.01 f/cc. The abatement inside the regulated area is considered complete when every PCM final clearance sample is below the clearance limit. If any sample result is greater than 0.01 total f/cc, the asbestos fiber concentration (asbestos f/cc) shall be confirmed from that same filter using NIOSH 2003-154 Method 7402 (TEM) at Contractor's expense. If any confirmation sample result is greater than 0.01 asbestos f/cc, abatement is incomplete and cleaning shall be repeated. Upon completion of any required recleaning, resampling with results to meet the above clearance criteria shall be done.

3.9.7.2 Final Clearance Requirements, EPA TEM Method

For EPA TEM sampling and analysis, using the EPA Method specified in 40 CFR 763, abatement inside the regulated area is considered complete when the arithmetic mean asbestos concentration of the 5 inside samples is less than or equal to 70 structures per square millimeter (70 S/mm). When the arithmetic mean is greater than 70 S/mm, the 3 blank samples shall be analyzed. If the 3 blank samples are greater than 70 S/mm, resampling shall be done. If less than 70 S/mm, the 5 outside samples shall be analyzed and a Z-test analysis performed. When the Z-test results are less than 1.65, the decontamination shall be considered complete. If the Z-test results are more than 1.65, the abatement is incomplete and cleaning shall be repeated. Upon completion of any required recleaning, resampling with results to meet the above clearance criteria shall be done.

3.9.7.3 Air Clearance Failure

If clearance sampling results fail to meet the final clearance requirements, pay all costs associated with the required recleaning, resampling, and analysis, until final clearance requirements are met.

3.9.8 Air-Monitoring Results and Documentation

Air sample fiber counting shall be completed and results provided within 24 hours (breathing zone samples), and 24 hours (environmental/clearance monitoring) after completion of a sampling period. The CO shall be notified immediately of any airborne levels of asbestos fibers in excess of established requirements. Written sampling results shall be provided within 5 working days of the date of collection. The written results shall be signed by testing laboratory analyst, testing laboratory principal and the Contractor's Designated IH. The air sampling results shall be documented on a Contractor's daily air monitoring log. The daily air monitoring log shall contain the following information for each sample:

a. Sampling and analytical method used;
b. Date sample collected;
c. Sample number;
d. Sample type: BZ = Breathing Zone (Personal), P = Preabatement, E = Environmental, C = Abatement Clearance;
e. Location/activity/name where sample collected;
f. Sampling pump manufacturer, model and serial number, beginning flow rate, end flow rate, average flow rate (L/min);
g. Calibration date, time, method, location, name of calibrator, signature;
h. Sample period (start time, stop time, elapsed time (minutes);
i. Total air volume sampled (liters);
j. Sample results (f/cc and S/mm square) if EPA methods are required for final clearance;

k. Laboratory name, location, analytical method, analyst, confidence level. In addition, the printed name and a signature and date block for the Industrial Hygienist who conducted the sampling and for the Industrial Hygienist who reviewed the daily air monitoring log verifying the accuracy of the information.

3.10 CLEARANCE CERTIFICATION

When asbestos abatement is complete, ACM waste is removed from the regulated areas, and final clean-up is completed, the CO will allow the warning signs and boundary warning tape to be removed. After final clean-up and acceptable airborne concentrations are attained, but before the HEPA unit is turned off and the containment removed, the Contractor shall remove all pre-filters on the building HVAC system and provide new pre-filters. Dispose of such filters as asbestos contaminated materials. HVAC, mechanical, and electrical systems shall be re-established in proper working order. The Contractor and the CO shall visually inspect all surfaces within the containment for residual material or accumulated debris. Reclean all areas showing dust or residual materials. The CO will certify in writing that the area is safe before unrestricted entry is permitted. The Government will have the option to perform monitoring to certify the areas are safe before entry is permitted.

3.11 CLEANUP AND DISPOSAL

3.11.1 Title to ACM Materials

ACM material resulting from abatement work, except as specified otherwise, shall become the property of the Contractor and shall be disposed of as specified and in accordance with applicable federal, state and local regulations.

3.11.2 Collection and Disposal of Asbestos

All ACM waste shall be collected including contaminated wastewater filters, scrap, debris, bags, containers, equipment, and asbestos contaminated clothing and placed in leak-tight containers. Waste within the containers shall be wetted in case the container is breeched. Asbestos-containing waste shall be disposed of [at an EPA, state and local approved asbestos landfill] [off Government property]. For temporary storage, sealed impermeable containers shall be stored in an asbestos waste load-out unit or in a storage/transportation conveyance (i.e., dumpster, roll-off waste boxes, etc.) in a manner acceptable to and in an area assigned by the CO. Procedure for hauling and disposal shall comply with 40 CFR 61, Subpart M, state, regional, and local standards. Submit manufacturer's catalog data for all materials and equipment to be used, including brand name, model, capacity, performance characteristics and any other pertinent information. Test results and certificates from the manufacturer of encapsulants substantiating compliance with performance requirements of this specification. Material Safety Data Sheets for all chemicals to be used onsite in the same format as implemented in the Contractor's HAZARD COMMUNICATION PROGRAM. Data shall include, but shall not be limited to, the following items:

a. High Efficiency Filtered Air (HEPA) local exhaust equipment
b. Vacuum cleaning equipment
c. Pressure differential monitor for HEPA local exhaust equipment
d. Air monitoring equipment

e. Respirators
f. Personal protective clothing and equipment
g. Glovebags. Written manufacturer's proof that glovebags will not break down under expected temperatures and conditions.
h. Duct Tape
i. Disposal Containers
j. Sheet Plastic
k. Wetting Agent
l. Strippable Coating
m. Prefabricated Decontamination Unit
n. Material Safety Data Sheets (for all chemicals proposed)

3.11.3 Records and Management Plan

3.11.3.1 Asbestos Waste Shipment Records

Complete and provide the CO final completed copies of the Waste Shipment Record for all shipments of waste material as specified in 40 CFR 61, Subpart M and other required state waste manifest shipment records, within 3 days of delivery to the landfill. Each Waste Shipment Record shall be signed and dated by the [Contractor] [CO], the waste transporter and disposal facility operator.

3.11.3.2 Asbestos Management Plan
Provide a summary, in electronic form, of site activities (bulk samples, asbestos removed, repaired, encased, etc.) for updating the installation Asbestos Management Plan.

TABLE 1

INDIVIDUAL WORK TASK DATA ELEMENTS

Sheet_____of _____
There is a separate data sheet for each individual work task.

1. WORK TASK DESIGNATION NUMBER _____
2. LOCATION OF WORK TASK_____
_____
3. BRIEF DESCRIPTION OF MATERIAL TO BE ABATED:_____
_____

   a. Type of Asbestos _____
   b. Percent asbestos content_____%

4. ABATEMENT TECHNIQUE TO BE USED_____
5. OSHA ASBESTOS CLASS DESIGNATION FOR WORK TASK_____
6. EPA NESHAP FRIABILITY DESIGNATION FOR WORK TASK Friable_Non-friable Category I _____
   Non-friable Category II_____
7. FORM_____and CONDITION OF ACM: GOOD_____FAIR_____POOR_____

8. QUANTITY: METERS_____, SQUARE METERS_____
8a. QUANTITY: LINEAR FT._____, SQUARE FT._____
9. RESPONSE ACTION DETAIL SHEET NUMBER FOR WORK TASK_____
10. SET-UP DETAIL SHEET NUMBERS FOR WORK TASK_____,_____,_____,_____,_____,_____.

NOTES:

(1) Numeric sequence of individual work tasks (1,2,3,4, etc.) for each regulated area. Each category of EPA friability/OSHA class has a separate task.
(2) Specific location of work (building, floor, area, e.g., Building 1421, 2nd Floor, Rm 201)
(3) A description of material to be abated (example: horizontal pipe, cement wall panels, tile, stucco, etc.) type of asbestos (chrysotile, amosite, crocidolite, etc.); and % asbestos content.
(4) Technique to be used: Removal = REM; Encapsulation = ENCAP; Encasement = ENCAS; Enclosure = ENCL; Repair = REP.
(5) Class designation: Class I, II, III, or IV (OSHA designation).
(6) Friability of materials: Check the applicable EPA NESHAP friability designation.
(7) Form: Interior or Exterior Architectural = IA or EA; Mechanical/Electrical = ME.
Condition: Good = G; Fair = F; Poor = P.
(8) Quantity of ACM for each work task in meters or square meters. (8a) Quantity of ACM for each work task in linear feet or square feet.
(9) Response Action Detail Sheet specifies the material to be abated and the methods to be used. There is only one Response Action Detail Sheet for each abatement task.
(10) Set-up Detail Sheets indicate containment and control methods used in support of the response action (referenced in the selected Response Action Detail Sheet).

TABLE 2

FORMULA FOR CALCULATION OF THE 95 PERCENT CONFIDENCE LEVEL
(Reference: NIOSH 7400)

Fibers/cc(01.95 percent CL) = X + [(X) * (1.645) * (CV)]

Where: X = ((E)(AC))/((V)(1000))

E = ((F/Nf) - (B/Nb))/Af

CV = The precision value; 0.45 shall be used unless the analytical laboratory provides the Contracting Officer with documentation (Round Robin Program participation and results) that the laboratory's precision is better.

AC = Effective collection area of the filter in square millimeters V = Air volume sampled in liters

E = Fiber density on the filter in fibers per square millimeter F/Nf = Total fiber count per graticule field B/Nb = Mean field blank count per graticule field Af = Graticule field area in square millimeters TWA = C1/T1 + C2/T2 = Cn/Tn Where: C = Concentration of contaminant T = Time sampled.

TABLE 3

NIOSH METHOD 7400
PCM ENVIRONMENTAL AIR SAMPLING PROTOCOL (NON-PERSONAL)

Sample Sampling (Note 2)	Minimum Location Rate	Filter Pore No. of Samples	Min. Vol. (Liters)	Size (Note 1) (liters/min.)
Inside Abatement Area	0.5/140 Square Meters	0.45 microns	3850 (Notes 3 & 4)	2-16
Each Room in 1 Abatement Area Less than 140 Square meters		0.45 microns	3850	2-16
Field Blank	2	0.45 microns	0	0
Laboratory Blank	1	0.45 microns	0	0

Notes:
1. Type of filter is Mixed Cellulose Ester.
2. Ensure detection limit for PCM analysis is established at 0.005 fibers/cc.
3. One sample shall be added for each additional 140 square meters. (The corresponding I-P units are 5/1500 square feet).
4. A minimum of 5 samples are to be taken per abatement area, plus 2 field blanks.

TABLE 4

EPA AHERA METHOD: TEM AIR SAMPLING PROTOCOL

Location	Minimum Sampling Vol. Samples	Filter Pore Sampled	Min. No. of Rate (Liters)	Size (liters/min.)
Inside Abatement Area	5	0.45 microns	1500	2-16
Outside Abatement Area	5	0.45 microns	1500	2-16
Field Blank	2	0.45 microns	0	0
Laboratory Blank	1	0.45 microns	0	0

Notes:
1. Type of filter is Mixed Cellulose Ester.
2. The detection limit for TEM analysis is 70 structures/square mm.

CERTIFICATE OF WORKER'S ACKNOWLEDGMENT

PROJECT NAME_____CONTRACT NO. _____ PROJECT ADDRESS _____
(Print) (Last) (First) (MI)

Social Security Number:_____-_____-_____, (Optional)

WORKING WITH ASBESTOS CAN BE DANGEROUS. INHALING ASBESTOS FIBERS HAS BEEN LINKED WITH TYPES OF LUNG DISEASE AND CANCER. IF YOU SMOKE AND INHALE ASBESTOS FIBERS, THE CHANCE THAT YOU WILL DEVELOP LUNG CANCER IS GREATER THAN THAT OF THE NONSMOKING PUBLIC.

Your employer's contract for the above project requires that you be provided and you complete formal asbestos training specific to the type of work you will perform and project specific training; that you be supplied with proper personal protective equipment including a respirator, that you be trained in its use; and that you receive a medical examination to evaluate your physical capacity to perform your assigned work tasks, under the environmental conditions expected, while wearing the required personal protective equipment. These things are to be done at no cost to you. By signing this certification, you are acknowledging that your employer has met these obligations to you. The Contractor's Designated Industrial Hygienist will check the block(s) for the type of formal training you have completed. Review the checked blocks prior to signing this certification.

FORMAL TRAINING:
_____a. For Competent Persons and Supervisors: I have completed EPA's Model

Accreditation Program (MAP) training course, "Contractor/Supervisor", that meets this State's requirements.

b. For Workers:

_____ (1) For OSHA Class I work: I have completed EPA's MAP training course, "Worker", that meets this State's requirements.

_____ (2) For OSHA Class II work (where there will be abatement of more than one type of Class II materials, i.e., roofing, siding, floor tile, etc.): I have completed EPA's MAP training course, "Worker",
that meets this State's requirements.

(3) For OSHA Class II work (there will only be abatement of one type of Class II material):

_____ (a) I have completed an 8-hour training class on the elements of 29 CFR 1926.1101 (k)(9)(viii), in addition to the specific work practices and engineering controls of 29 CFR 1926.1101(g) and hands-on training.

_____ (b) I have completed EPA's MAP training course, "Worker", that meets this State's requirements.

_____ (4) For OSHA Class III work: I have completed at least a 16-hour course consistent with EPA requirements for training of local education agency maintenance and custodial staff at 40 CFR 763, Section .92(a)(2) and the elements of 29 CFR 1926.1101(k)(9)(viii), in addition to the specific work practices and engineering controls at 29 CFR 1926.1101, and hands-on training.

_____ (5) For OSHA Class IV work: I have completed at least a 2-hr course consistent with EPA requirements for training of local education agency maintenance and custodial staff at 40 CFR 763, (a)(1), and the elements of 29 CFR 1926.1101(k)(9)(viii), in addition to the specific work practices and engineering controls at 29 CFR 1926.1101(g) and hands-on training.

_____c. Workers, Supervisors and the Designated Competent Person: I have completed annual refresher training as required by EPA's MAP that meets this State's requirements.

PROJECT SPECIFIC TRAINING:

_____ I have been provided and have completed the project specific training required by this Contract. My employer's Designated Industrial Hygienist and Designated Competent Person conducted the training.

RESPIRATORY PROTECTION:

_____ I have been trained in accordance with the criteria in the Contractor's Respiratory Protection program. I have been trained in the dangers of handling and breathing asbestos dust and in the proper work procedures and use and limitations of the respirator(s) I will wear. I have been trained in and will abide by the facial hair and contact lens use policy of my employer.

RESPIRATOR FIT-TEST TRAINING:

_____ I have been trained in the proper selection, fit, use, care, cleaning, maintenance, and storage of the respirator(s) that I will wear. I have been fit-tested in accordance with the criteria in the Contractor's Respiratory Program and have received a satisfactory fit. I have been assigned my individual respirator. I have been taught how to properly perform positive and negative pressure fit-

check upon donning negative pressure respirators each time.

EPA/[STATE] CERTIFICATION/LICENSE

I have an EPA/[_____] certification/license as:
Building Inspector/Management Planner; Certification #_____
Contractor/Supervisor, Certification # _____
Project Designer, Certification # _____
Worker, Certification # _____

MEDICAL EXAMINATION:
_____ I have had a medical examination within the last twelve months which was paid for by my employer. The examination included: health history, pulmonary function tests, and may have included an evaluation of a chest x-ray. A physician made a determination regarding my physical capacity to perform work tasks on the project while wearing personal protective equipment including a respirator. I was personally provided a copy and informed of the results of that examination. My employer's Industrial Hygienist evaluated the medical certification provided by the physician and checked the appropriate blank below. The physician determined that there:

_____ were no limitations to performing the required work tasks.
_____ were identified physical limitations to performing the required work

tasks. Date of the medical examination _____

Employee Signature_____date _____
Contractor's Industrial
Hygienist Signature_____date _____

SECTION 01 57 19.01 20B

SOIL, FILL, AND CONSTRUCTION/DEMOLITION DEBRIS REMOVAL

PART 1 – GENERAL

1.1 Applicability:

These environmental requirements apply to all NAVFAC Midlant projects where materials existing on the site will be removed.

1.2 Introduction

A. Description of Work: This specification is for the excavation, stockpiling, loading, hauling, removal, and disposal of any materials including soils (including non-special waste soils and non-hazardous special waste soils), fill, topsoil, and general construction and demolition debris from NAVFAC Midlant projects. The Contractor shall perform the work under this section in accordance with all applicable local, county, IEPA, USEPA, and OSHA regulations. The Work shall include the following:

1. Removal and disposal

a. Prior to excavation of any soil, fill, topsoil, and general construction and demolition debris material, obtain authorization for ultimate disposition of materials from a Subtitle D facility approved by the NAVFAC Midlant Authorized representative. The waste characterization analytical must be sent to the Managing Environmental Consultant (MEC) for approval and to the NAVFAC Midlant Environmental Project Manager or signature prior to sending in the waste profile to the landfill.

b. Perform analytical testing required by the landfill for waste stream authorizations as necessary to secure required disposal permits for all materials. All costs associated with collecting waste stream samples and performing analytical tests shall be at contractor's expense.

c. Obtain authorization from an open and active Permitted Subtitle D landfill indicating acceptance of materials at the facility. The Authorization must be signed by the owner/authorized representative of the Permitted Subtitle D landfill and state that the facility complies with local zoning codes and applicable local, State, and Federal rules and regulations, that all required laboratory analyses has been received by the facility, and that the facility has agreed to accept the soils (including non-special waste soils and non-hazardous special waste soils), fill, topsoil, and general construction and demolition debris

materials ("said soils"). The Authorization shall further state that said soils are being accepted for permanent placement, and that the material will not be removed from the disposal facility unless required by a local, State or Federal Authority.

d. Prepare daily reports, transport manifests, weight tickets and receipts (as applicable) prior to starting any soil removal activities.

e. Excavation of said soils to the depth required to complete the proposed site preparation/construction work activities as specified in Architect/Engineer drawings and specifications.

f. Load and transport designated materials to the approved Permitted Subtitle D landfill into approved containers or vessels.

g. Provide copies of all daily reports, signed transport/waste manifest, signed weight tickets, and disposal receipts (as applicable) to the NAVFAC Midlant Authorized Representative on a daily basis documenting proper disposal of said soils.

2. Placement of backfill, granular fill, topsoil

The contractor shall supply only backfill, granular fill, topsoil per project specifications and which does not exceed APPENDIX B, SECTION 742, TABLE A; TIERED APPROACH TO CORRECTIVE ACTION OBJECTIVES (TACO) soil remediation objective values for 35 ILL. ADM CODE SECTION 740 APPENDIX A Target Compound List (TCL) parameters**.** For TCL parameters known as PNAs, TACO Appendix A Table H (Concentrations of Polynuclear Hydrocarbon Compounds in background Soils) soil remediation values may be used. For materials imported from recycled sources, one sample per 500 tons of fine-grained material must be analyzed for TCL parameters. The date of the environmental analysis of any backfill or topsoil shall be within 90 days of importing such material to a NAVFAC Midlant property. For aggregate samples from virgin sources, a letter from the source Owner stating the material is naturally occurring virgin material may be used in lieu of the above analytical testing.

1.4 DEFINITIONS

A. Agency means Illinois Environmental Protection Agency (IEPA).

B. Backfill means granular or cohesive material used to fill the excavation to design grade as referenced in design plans and specifications.

C. NAVFAC Midlant Authorized Representative means the person or entity designated as the official representative of the owner in connection with a project.

D. Fill means any earthen or non-earthen materials including but not limited to any sediment, granular or cohesive non-native earthen materials, cinders, ash, wood, and brick, concrete, and asphalt fragments, glass, and building debris encountered above naturally occurring undisturbed soils or bedrock in built-up areas.

E. Clean Construction and Demolition Debris (CCDD) means non-hazardous, uncontaminated materials resulting from construction, remodeling, repair, and demolition of utilities, structures, and roads as defined in Public Act 096-1416, The Environmental Protection Act, 415 ILCS 5 Section 3.160 and regulated under Title 35: Environmental Protection; Subtitle G: Waste Disposal; Chapter I: Pollution Control Board; Subchapter i: Solid Waste and Special Waste Hauling. General Construction and Demolition Debris limited to the following: bricks, concrete, and other masonry materials; soil; rock; wood, including non-hazardous painted, treated, and coated wood and wood products; wall coverings; plaster; drywall; plumbing fixtures; non-asbestos insulation; roofing shingles and other roof coverings; reclaimed or other asphalt pavement; glass; plastics that are not sealed in a manner that conceals waste; electrical wiring and components containing no hazardous substances; and corrugated cardboard, piping or metals incidental to any of those materials. This material must be certified clean by a Licensed Professional Engineer/Geologist on IEPA form LPC 663 prior to removal from the site for disposal at an IEPA-permitted CCDD facility.

F. Permitted Subtitle D landfill means any open and active solid waste landfill facility in any state licensed and/or permitted to accept non-hazardous waste, where soils (including non-special waste soils and non-hazardous special waste soils), fill, general construction and demolition debris ("said soils") are to be deposited. If the landfill facility is located in Illinois, the landfill must be permitted by the Illinois Environmental Protection Agency and other local regulatory agencies as applicable. If the landfill is located outside of Illinois, the landfill facility must be open, active and permitted by applicable state and local regulatory agencies.

G. IEPA means Illinois Environmental Protection Agency.

H. IDOT means Illinois Department of Transportation.

I. Manifest means the form provided or prescribed by IEPA and used for identifying name, quality, routing, and destination of special waste during its transportation from point of generation to the point of disposal, treatment, or storage.

J. Managing Environmental Consultant (MEC) means the entity with overall responsibility for the direction and control of environmental investigations, assessment, design, and supervision of remediation work.

K. MSDS means Material Safety Data Sheet, required by OSHA for any substances that are toxic, caustic, or otherwise potentially hazardous to workers.

L. OSHA means Occupational Safety and Health Administration.

M. Owner's Representative (OR) means the person or entity designated as the official representative of the owner/NAVFAC Midlant in connection with a project.

N. Remediation Area means any area on site where underground storage tanks, non-special waste and/or non-hazardous special waste, or contaminated soils that do not meet 35 IAC 742 Tier 1 SROs for residential properties are present.

O. Soil means any granular or cohesive material designated for removal as specified in the Architect/Engineer drawings and specifications and includes soils determined to be non-special and special waste.

P. Special Waste means any wastes as defined in Title 35: Environmental Protection; Subtitle G: Waste Disposal; Chapter I: Pollution Control Board; Subchapter i: Solid Waste and Special Waste Hauling; Part 808: Special Waste Classifications; Subpart A: General Provisions; Section 808.110,

AND

Any wastes as defined in Title 35: Environmental Protection; Subtitle G: Waste Disposal; Chapter I: Pollution Control Board; Subchapter i: Solid Waste and Special Waste Hauling; Part 809: Non Hazardous Special Waste Hauling and the Uniform Program; Subpart A: General Provisions; Section 809.103.

Q. SROs mean Soil Remediation Objectives for various exposure routes identified in Title 35 Illinois Administrative Code Part 742: Tiered Approach To Corrective Action Objectives (TACO).

R. Storm water means water deposited at the site in the form of rain, snow or other natural weather event.

S. TACO means TIERED APPROACH TO CORRECTIVE ACTION OBJECTIVES (TACO) per 35 Illinois Administrative Code 742.

T. Topsoil means soils placed to design grade and used to promote vegetative growth and which meets Top Soil criteria {percentages of organic matter, inorganic matter (silt, clay, and sand)}, deleterious material, pH, and mineral and plant-nutrient content as referenced in the contract specifications and drawings .

U. USEPA means United States Environmental Protection Agency.

1.5 Submittals

A. Copies of the following submittals shall be prepared and submitted to the NAVFAC Midlant Authorized Representative at Contractor's own cost and within ten (10) days prior to start of work:

1. Contractor's Site Specific Health and Safety Plan for all workers engaged in excavation, stockpiling, loading, hauling, removal, and disposal of any soils (including non-special waste soils and non-hazardous special waste soils), fill, general construction and demolition debris from the property. The plan shall comply with all OSHA requirements utilizing information attained in existing environmental reports. The work shall be performed under the direct supervision of a trained experienced site supervisor. The plan should at a minimum include the following:
   a. Name of key personnel and alternates responsible for site safety
   b. Describe the risks associated with each operation conducted.
   c. Describe chemical contaminants to be encountered by employees on work site and specific hazards if any to the workers as required by OSHA.
   d. Type of personnel training and responsibilities and to handle the specific hazardous situations they may encounter. OSHA training records for applicable workers are to be in compliance with the Hazardous Waste Operations and Emergency Response Standard (29 CFR 1910.120) prior to commencement of work.
   e. Describe the protective clothing and equipment to be worn by personnel during various site operations.
   f. Describe any site-specific medical surveillance requirements.
   g. Describe the program for the periodic air monitoring, personnel monitoring, and environmental sampling if needed.
   h. Describe the actions to be taken to mitigate existing hazards to make the work environment less hazardous.
   i. Define site control measures including a site map.
   j. Establish procedures for personnel and equipment and transporting trucks to ensure that impacted soils are not tracked off site on to non-impacted areas of the site.
   k. Set forth the site Standard Operating Procedures (SOPs). SOPs are those activities that can be standardized (i.e., decon procedures and respirator fit testing).
   l. Set forth a Contingency Plan for the safe and effective response to emergencies.

2. Soil Management Plan outlining proposed excavation work sequences and procedures to separate each type of material to be removed from the site from clean materials. The Soil Management Plan shall show the locations of each type of material to be stored on site, location of clean materials to be stored at the site for reuse, and location of material to be stored on site

for future disposal. The Plan shall also include information regarding concrete and brick recycling procedures and name and address of concrete and brick recycling sites proposed as part of this project.

3. Disposal Facility Information Name, address and telephone number of the open, active and permitted Subtitle D Landfill facility where said soils are to be deposited. This submittal must be made 30 days prior to removal of any materials from the site. This information should include, at a minimum, the following:

    a. Facility Name and Address and Telephone Number.
    b. Site Contact.
    c. Facility Identification Number issued by Illinois, U.S. EPA, or other state licensing agencies for Special Waste Disposal facility.
    d. State and/or Local Operational Permit Number(s) for the impacted Construction and Demolition Debris Disposal sites.

4. Generator Signature: The Contractor shall fill out the waste profile and send it to the MEC for approval. The MEC will forward the waste profile to the NAVFAC Midlant Environmental Project Manager or designee for signature. The Contractor shall assume this signature process will take five business days to accomplish.

5. Waste Stream authorization and/or permit from the Subtitle D Permitted Landfill facility where said soils are to be deposited prior to removal from the site. The authorization must be signed by the Permitted Subtitle D landfill facility representative and state that the facility complies with local zoning codes and applicable local, State, and Federal rules and regulations, that all required laboratory analyses has been received by the facility, and that the facility has agreed to accept the soils (including non-special waste soils, and non-hazardous special waste soils), fill, and general construction and demolition debris materials. The Authorization shall further state that the soils (including non-special waste soils and non-hazardous special waste soils), fill, general construction and demolition debris fill materials are being accepted for permanent placement at the facility, and that the material will not be removed from the facility unless required by a local, State or Federal Authority.

6. Analytical Testing Laboratory including the name, address, and State of Illinois Environmental Protection Agency accreditation in accordance with the Illinois Administrative Code, Title 35, Subtitle A Chapter II, Part 186, for the laboratory to be utilized by the Contractor to perform analytical testing prior to the start of Work.

7. Storm Water Management Plan: If the footprint area to be disturbed is greater than one acre, twenty (20) days prior to commencing work, the contractor shall provide the MEC a liquid materials handling plan. This plan shall stipulate provisions for dewatering, pumping, collection, temporary storage, and discharge or disposal of storm water, perched water and other liquids, contaminated and/or uncontaminated, at the site so as to facilitate soil removal and minimize disposal costs for contaminated fluids.

8. Copies of Special/Hazardous Waste Hauler Licenses/Permits for each proposed transporter prior to removal of soil from the site, pursuant to 35 IAC 809. Include current copy of IEPA and/or USEPA approval letter/permit, and details of haul route(s) from site to designated disposal facilities.

9. Copies of Waste Disposal Manifests and Weight Tickets are to be furnished to the NAVFAC MIDLANT Authorized representative on a daily basis. Manifests and weight tickets must be fully executed by the generator, transporter, and designated disposal/recycling facility. These shall be presented in dated order with an attached summary table. All manifests and weight tickets must be received by NAVFAC Midlant within ten (10) working days of completion of the project.

10. Daily Reports/Logs summarizing excavation activities generating waste, any temporary stockpile locations, transporter information, equipment, and labor. Contractor shall submit these records on monthly basis.

11. Air Sampling Data collected during the course of the Work, including OSHA compliance air monitoring, if applicable.

1.6 Submittal Review

A. Review of submittals or any comments made does not relieve the Contractor from compliance with the requirements of project drawings and/or specifications. The purpose of this check is to review for general conformance with the design concept of the project and general compliance with the information given in the contract documents. The Contractor is responsible for confirming and correlating all quantities and dimensions; electing techniques of construction; coordinating the Work; and performing the Work in a safe and satisfactory manner.

B. The Contractor must not begin any Work applicable to this section until all required submittals have been reviewed and accepted by the NAVFAC Midlant Authorized representative.

1.7 Notifications

The Contractor shall notify the NAVFAC Midlant Authorized Representative and MEC no less than 48 hours prior to loading and transporting any materials from the site. The MEC must be notified within the same timeframe or sooner or materials cannot leave the site.

1.8 Recordkeeping

The Contractor shall provide documentation of labor, equipment, materials, tickets, manifests, and disposal laboratory analysis used for soil removal, when requested by the NAVFAC Midlant Authorized Representative or MEC.

1.9 Coordination of Work

A. The Contractor shall coordinate and schedule the work so as to cause the least possible disruption to daily site activities.

B. The Contractor shall cooperate with and coordinate work progress with the Owner, the MEC and any other contractors working on site. Excavated soil shall be stockpiled near the excavation or at an area deemed suitable by the Owner. The Contractor shall assist the Owner with its machinery and operator to inspect and obtain soil samples, if necessary, from the open excavation(s) at no additional cost to the Owner.

1.10 Job Conditions

A. The Contractor shall perform all Work without creating hazardous conditions anywhere on site.

B. All excavation, truck loading, grading, and backfilling operations will be conducted so as to ensure minimum interference with traffic. Roads, streets, walks, and other adjacent occupied and used facilities shall not be closed or obstructed without permission from the applicable governing agency and the Owner. Alternate routes around closed or obstructed traffic ways must be provided if required by the governing agency.

C. Any damage caused to adjacent pavement, utilities, or facilities by earth work operations will be promptly replaced or repaired at no additional cost to the Owner and such work shall be performed to the satisfaction of the Owner.

PART 2 - PRODUCTS

2.1 Removal of Soil, Fill, Backfill, and Construction and Demolition Debris

A. The Contractor shall furnish all necessary means, products, tools, and equipment required to remove said soil from the site as directed by the NAVFAC Midlant Authorized Representative.

B. The Contractor shall also furnish all necessary means, products, tools, and equipment required to fulfill the scope of work described in the contract specifications and drawings. The contractor, by submitting a bid for the Work, represents itself as knowledgeable and an expert in the performance of the Work, and includes all things usually and customarily necessary to provide a complete and finished job, whether specifically mentioned or not.

C. The Contractor must have a complete plan for the entire process of soil removal and disposal in accordance with the project requirements. Contractor must provide schedule of all Work activities in accordance with the approved construction schedule.

PART 3 - EXECUTION

3.1 Authorizations

A. Obtain authorization from the Permitted Subtitle D landfill owner where said soils are to be deposited. The Authorization must be signed by the owner/authorized representative of the Permitted Subtitle D landfill and state that the facility complies with local zoning codes and applicable local, State, and Federal rules and regulations, that all required laboratory analyses has been received by the facility, and that the facility has agreed to accept said soils. The Authorization shall further state that said soils are being accepted for permanent placement, and that the material will not be removed from the disposal facility unless required by a local, State or Federal Authority.

B. Obtain prior authorization from the NAVFAC Midlant Authorized Representative to backfill excavations and utility lines, and apply topsoil. All backfill and topsoil shall comply with project specifications and Section 1.2.A.2 above.

C. Haulers for transportation shall hold a current, valid hauling permit for materials being transported off-site. Haulers shall hold, and present upon request, a current valid Commercial Driver’s License.

D. Obtain prior authorization from NAVFAC Midlant Authorized Representative on the Waste Profile at least (5) days in advance of removing waste materials.

3.2 Material Sampling

A. Soil, Fill, Construction and Demolition debris

1. The Contractor shall collect sufficient amount of representative sample(s) from each type of material being removed from the site for analytical testing to obtain authorization for the ultimate disposition of the materials. The Contractor is responsible for providing proper collection, handling and transportation of collected samples to the laboratory. The contractor is responsible for acquisition of any required permits and payment of all fees.
2. The Contractor shall be responsible for obtaining liquid samples as needed for characterization for liquid disposal offsite or disposition onsite as applicable. The Contractor is responsible to the acquisition of any required disposal permits and the payment of any fees associated with liquid disposal.
3. The Contractor shall submit collected soil and liquid samples (as applicable) to the certified laboratory and pay for the cost of analyzing constituents required for the ultimate disposition of soils and liquids.
4. The MEC may collect samples for laboratory analysis or field Photo-ionization Detector (PID) screening, or liquid samples for laboratory analysis (only if required by NAVFAC Midlant under special circumstance.) The Contractor shall provide the necessary equipment and manpower to assist the MEC to collect materials to be sampled at no additional cost to the project.
5. The Contractor shall immediately notify the NAVFAC Midlant Authorized Representative and MEC if any materials, (solid or liquid) requiring special handling (i.e., stained soil, soil with odors, or liquids) are encountered in areas other than those identified in the contract drawings and referenced documents. No further work shall proceed in the area until approval is provided by the NAVFAC Midlant Authorized Representative.
6. All excavated soils, liquids, and other material shall be removed from the site in accordance with applicable specifications, and local, state and federal requirements and guidelines.

3.3 Excavation

A. The Contractor shall perform excavation of said soils to the extent shown on contract drawings, as necessary to complete the work and/or as directed by the NAVFAC Midlant Authorized Representative.

B. All excavation shall be performed in accordance with the design drawings and local, state and federal requirements/guidelines.

C. All excavation, truck loading, grading, and backfilling operations will be conducted so as to ensure minimum interference with traffic. Roads, streets, walks, and other adjacent occupied and used facilities shall not be closed or obstructed without permission from the applicable governing agency and the

Owner. Alternate routes around closed or obstructed traffic ways must be provided if required by the governing agency

D. Any damage caused to adjacent pavement, utilities, or facilities by earth work operations will be promptly replaced or repaired at no additional cost to the Owner and such work shall be performed to the satisfaction of the Owner.

E. The Contractor is responsible for keeping the soils/materials which are classified differently separated during excavation activities. If Contractor commingles soils/materials, the Contractor must properly dispose of the all commingled soils/ materials at their own expense.

F. If an underground storage tank (UST), drum or other unknown container is discovered during excavation activities, the Contractor must stop excavation work and immediately inform the NAVFAC Midlant Authorized Representative. The NAVFAC Midlant Authorized Representative will assess the site conditions and instruct the Contractor how to proceed with the Work. Contractor may be asked by NAVFAC Midlant to perform further limited excavation in the area in order to gather information on size and/or quantity of newly discovered item(s). Contractor shall perform this limited excavation work at no additional cost to the Owner.

3.4 Loading

A. The Contractor shall load said soils directly from the site or from temporary stockpiles into hauling trucks for subsequent transportation and ultimate disposal.

B. Conduct all excavation, truck loading, grading, and backfilling operations so as to ensure minimum interference with roads, streets, walks, and other adjacent occupied and used facilities. Do not close or obstruct roads, streets or walks without permission from the applicable governing agency and the NAVFAC Midlant Authorized Representative. Alternate routes around closed or obstructed traffic ways must be provided by Contractor if required by the governing agency.

C. The Contractor shall maintain streets clean and free of mud and dirt generated from their Work and operations.

D. The Contractor is responsible for complying with State and local road/street weight limits.

3.5 Hauling

A. The Contractor shall remove soil, dust, rocks, etc. from the exterior of trucks, trailers, or other heavy equipment before they leave the site.

B. The Contractor shall not create dust; and shall maintain and use adequate dust suppression equipment on site if conditions warrant.

C. The Contractor shall maintain streets clean and free of mud and dirt.

D. The Contractor shall conduct said soil removal in a manner that ensures minimum interference with roads; streets, walks and other adjacent occupied and used facilities. Do not close or obstruct streets, walks or other occupied or used facilities without permission from the applicable governing agency and NAVFAC Midlant Authorized Representative. Provide alternate routes around closed or obstructed traffic ways if required by the governing agency.

3.6 Transportation

A. The Contractor shall provide and complete copies of all daily reports, weight tickets and receipts (as applicable) for transportation and ultimate off site disposal of materials removed from the property to the NAVFAC Midlant Authorized Representative, review and signature as required.

B. All soil/materials must be transported directly to the designated disposal facility from the site. Intermediate storage is not permitted.

C. The Contractor shall provide complete copies of disposal documentation for removal of all soil/materials to the NAVFAC Midlant Authorized Representative for review and signature as required. The Contractor shall provide manifests and/or other waste removal documentation to the NAVFAC Midlant Authorized Representative a minimum of two days prior to shipment, if signature is required.

D. The Transporter shall present evidence of special or hazardous waste hauling permits and CDL upon request by the NAVFAC Midlant Authorized Representative, as applicable.

E. Said soils shall be transported by a hauler licensed in the State of Illinois to transport applicable soils/materials.

F. The Contractor shall have properly signed manifests or disposal documentation in hand prior to leaving the site with materials to a landfill.

3.7 Stockpiling

A. Contractor may temporarily stockpile said soils on site for a maximum of five (5) working days, unless otherwise approved by the Owner.

B. The Contractor shall be responsible for keeping such stockpiles separated. If soils/materials designated separately are commingled by Contractor, the

Contractor shall dispose of such soil/material newly designated at his own expense. The Contractor will be responsible for sampling and analysis costs associated with characterization of newly designated soil/materials.

C. Acceptable locations for soil stockpiles shall be coordinated with the Owner. The Contractor shall containerize or place special waste, non-hazardous waste, or hazardous waste soils on 6 mil plastic sheeting, covered with 6 mil plastic sheeting, and protect with 12-inch to 18-inch berms until subsequent loading, transportation, and disposal. Base sheeting shall overlap the dike.

D. The Contractor shall not allow runoff from stockpiled soil or material to enter storm drains or leave the site.

3.8 Dust Control

A. The Contractor shall control dust by all necessary means, including but not limited to covering trucks, stockpiles and open materials, watering haul roads, sweeping paved roads, and limiting the speed of all on-site vehicles.

B. The Contractor shall prevent vehicles from tracking soil off site by all necessary means, including but not limited to construction of stone truck pads at site gates, and pressure washing vehicles and tires, as necessary. Contractor shall perform all necessary activities to keep roadways clean throughout each day and for the duration of the project.

3.9 Liquid (Water) Management

A. The Contractor shall subscribe to a weather notification system and manage the work so as not to accumulate storm water on the site during excavation.

B. Prior to commencing work, the contractor shall provide a stormwater management plan. This plan shall stipulate provisions for dewatering, pumping, collection, temporary storage, and discharge or disposal of storm water, perched water and other liquids, contaminated and/or uncontaminated, at the site so as to facilitate soil removal and minimize disposal costs for contaminated fluids.

C. The Contractor shall ensure that contamination of water, perched water and previously uncontaminated water or perched water does not occur by preventing the contact of such liquid with materials that exceed TACO, Appendix B, Table A values for TCL parameters. Earthen berms, plastic (polyethylene) sheeting, pumping, and other such means, as specified in the approved Storm water Management Plan, may be used.

D. If the Contractor, through negligence, allows storm water to contact materials that exceed TACO, Appendix B, Table A values for TCL parameters, the water must be disposed of as water that exceeds TACO groundwater remediation objectives. The Contractor will be responsible for the additional costs incurred for any disposal analysis and disposal costs.

3.10 Quality Control

A. Visual inspections and damage repairs shall be made daily by the Contractor and/or as directed by the NAVFAC Midlant Authorized Representative to assure that erosion, drainage and containment control measures are functioning properly.

B. The Contractor shall take all necessary precautions to protect structures, equipment, pavement, walks and utilities against movement or settlement during the course of work.

C. Damages: Promptly replace or repair any damage caused to adjacent pavement, utilities or facilities by removal operations at no additional cost. Work shall be performed to the satisfaction of the NAVFAC Midlant Authorized Representative.

D. Utility Services: Maintain existing utilities and protect against damage during removal operations.

SECTION 01 58 00

PROJECT IDENTIFICATION
08/09

PART 1 GENERAL

1.1 REFERENCES

The publications listed below form a part of this specification to the extent referenced. The publications are referred to within the text by the basic designation only.

AMERICAN WOOD PROTECTION ASSOCIATION (AWPA)

AWPA C1	(2003) All Timber Products – Preservative Treatment by Pressure Processes
AWPA C2	(2003) Lumber, Timber, Bridge Ties and Mine Ties – Preservative Treatment by Pressure Processes

1.2 SUBMITTALS

Government approval is required for submittals with a "G" designation; submittals not having a "G" designation are for Contractor Quality Control approval. The following shall be submitted in accordance with Section 01 33 10.05 20 DESIGN SUBMITTAL PROCEDURES:

SD-02 Shop Drawings

Preliminary one line drawings of project rendering; G

Preliminary drawing indicating layout and text content; G

Sign Legend Orders; G

SD-04 Samples

Final rendering sample; G

1.3 PROJECT SIGN

Prior to initiating any work on site, provide three project identification sign at the location designated. Construct the sign in accordance with project sign detail attached at the end of this section. Maintain sign throughout the life of the project. Upon completion of the project, remove the sign from the site. The Government will temporarily supply the Contractor a copy of the rendering to use in the production of the final signboard artwork. Reproduce the rendering on the signboard or enclose a copy of the rendering under a water-proof, transparent cover, and caulk for weather protection.

1.3.1 Project Identification Signboard (Navy)

A project identification signboard shall be provided in accordance with attached Plates 2, 3, 4, and 5. Provide preliminary drawing indicating layout and text content. The signboard shall be provided at a conspicuous location on the job site where directed by the Contracting Officer.

a. The field of the sign shall consist of a 4 by 8 foot sheet of grade B-B medium density overlaid exterior plywood.

b. Lumber shall be B or better Southern pine, pressure-preservative treated in accordance with AWPA C1 and AWPA C2. Nails shall be aluminum or galvanized steel.

c. The entire signboard and supports shall be given one coat of exterior alkyd primer and two coats of exterior alkyd enamel paint. The lettering and sign work shall be performed by a skilled sign painter using paint known in the trade as bulletin colors. The colors, lettering sizes, and lettering styles shall be as indicated. Where preservative-treated lumber is required, utilize only cured pressure-treated wood which has had the chemicals leached from the surface of the wood prior to painting.

d. Use spray applied automotive quality high gloss acrylic white enamel paint as background for the NAVFAC logo. NAVFAC logo shall be an applied 2 millimeter film sticker/decal with either transparent or white background or paint the logo by stencil onto the sign. The weather resistant sticker/decal film shall be rated for a minimum of 2-year exterior vertical exposure. The self-adhering sticker shall be mounted to the sign with pressure sensitive, permanent acrylic adhesive. Shop cut sticker/decal to rectangular shape and provide pull-off backing sheet on adhesive side of design sticker for shipping.

e. Sign paint colors (manufacturer's numbers/types listed below for color identification only)

   1. Blue = To match dark blue color in the NAVFAC logo.

   2. White = To match Brilliant White color in the NAVFAC logo.

f. NAVFAC logo must retain proportions and design integrity. NAVFAC logos in electronic format may be obtained from the NAVFAC web portal via the following link:

   https://portal.navfac.navy.mil/portal/page?_pageid=181,3465071&_dad=portal&_schema=portal.

   Use the following to choose color values for the paint to be used:

   1. Dark Blue = equivalent to CMYK values 100, 72, 0, 8 .

   2. Light Blue = equivalent to CMYK values 69, 34, 0, 0.

   3. Cyan = equivalent to CMYK values 100, 9, 0, 6.

   4. Yellow = equivalent to CMYK values 0.9,94, 0.

g. Final signboard artwork (rendering) may be either mounted under plexiglass as indicated in attached Plates 2 and 5, or at the Contractor's option may be electrostatically printed on 4 mil self-adhering, weather resistant, glossy vinyl film and mounted to signboard. Provide film that is capable of full color reproduction of the building rendering and cover it with an ultra-violet protection film. Laminate the 2 mil satin gloss clear protection film to the white 4 mil vinyl image film. Utilize pressure sensitive "controltac" adhesive to attach rendering to signboard and smooth out surface with hand pressure tools in accordance with manufacturer's recommendations. Shop cut sticker to size required and provide pull-off backing sheet on adhesive side of film for

shipping. Provide the rendering on film that is rated for a minimum of 2 years exterior vertical exposure.

PART 2 PRODUCTS

Not Used.

PART 3 EXECUTION

Not Used.

-- End of Section --

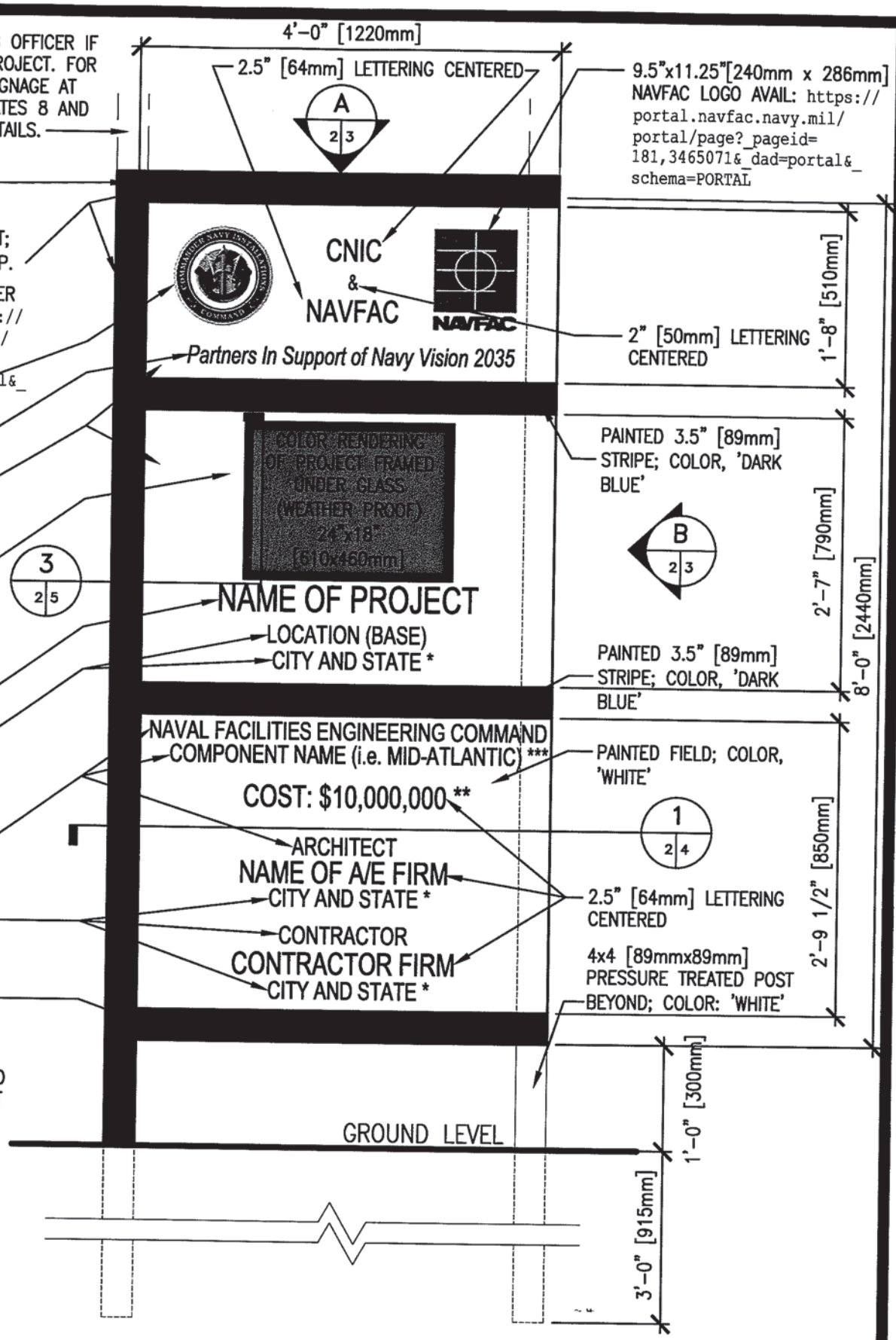

NOTES:

1. PAINT ALL OTHER WOOD SURFACES WITH ONE COAT EXT. PRIMER AND TWO COATS GLOSS WHITE ENAMEL.
2. ALL LETTERING SHALL BE EVENLY SPACED.
3. LETTER STYLE, 'ARIAL', COLOR 'DARK BLUE'. TYPICAL FOR ALL LETTERING.

*–ABBREVIATE STATE
**–CONFIRM USE WITH CONTRACTING OFFICER
***–VERIFY NAME WITH CONTRACTING OFFICER.

PROJECT IDENTIFICATION SIGNBOARD

SCALE: 3/4" = 1'-0"

PLATE 2

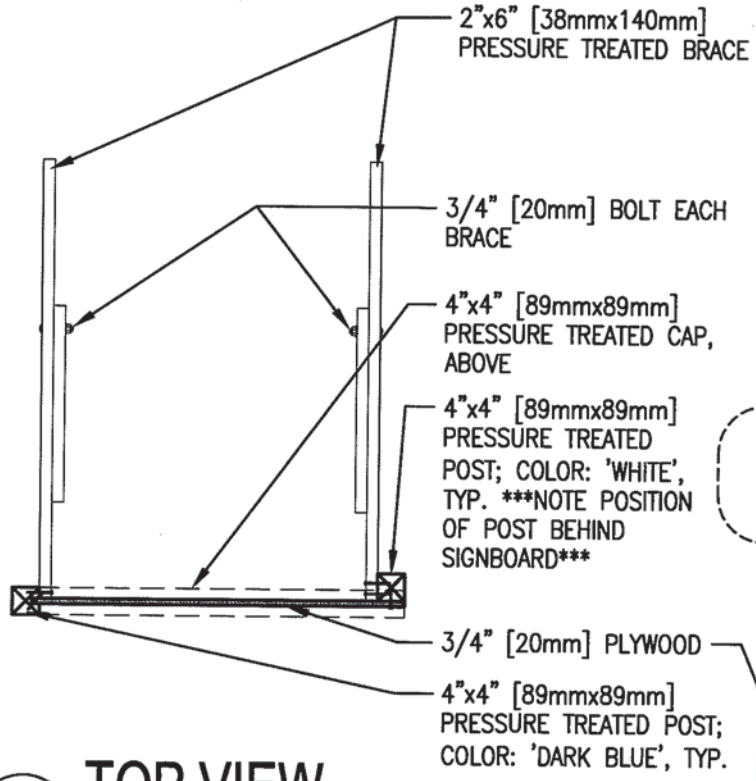

A (1,2|3) TOP VIEW

SCALE: 1/2" = 1'-0"

NOTES:
1. POSTS AND BRACES SHALL BE PRESSURE TREATED.
2. ALL FASTENERS SHALL BE ZINC COATED.
3. BRACING IS REQUIRED IN ALL SOIL CONDITIONS AND HIGH WIND ENVIRONMENTS.

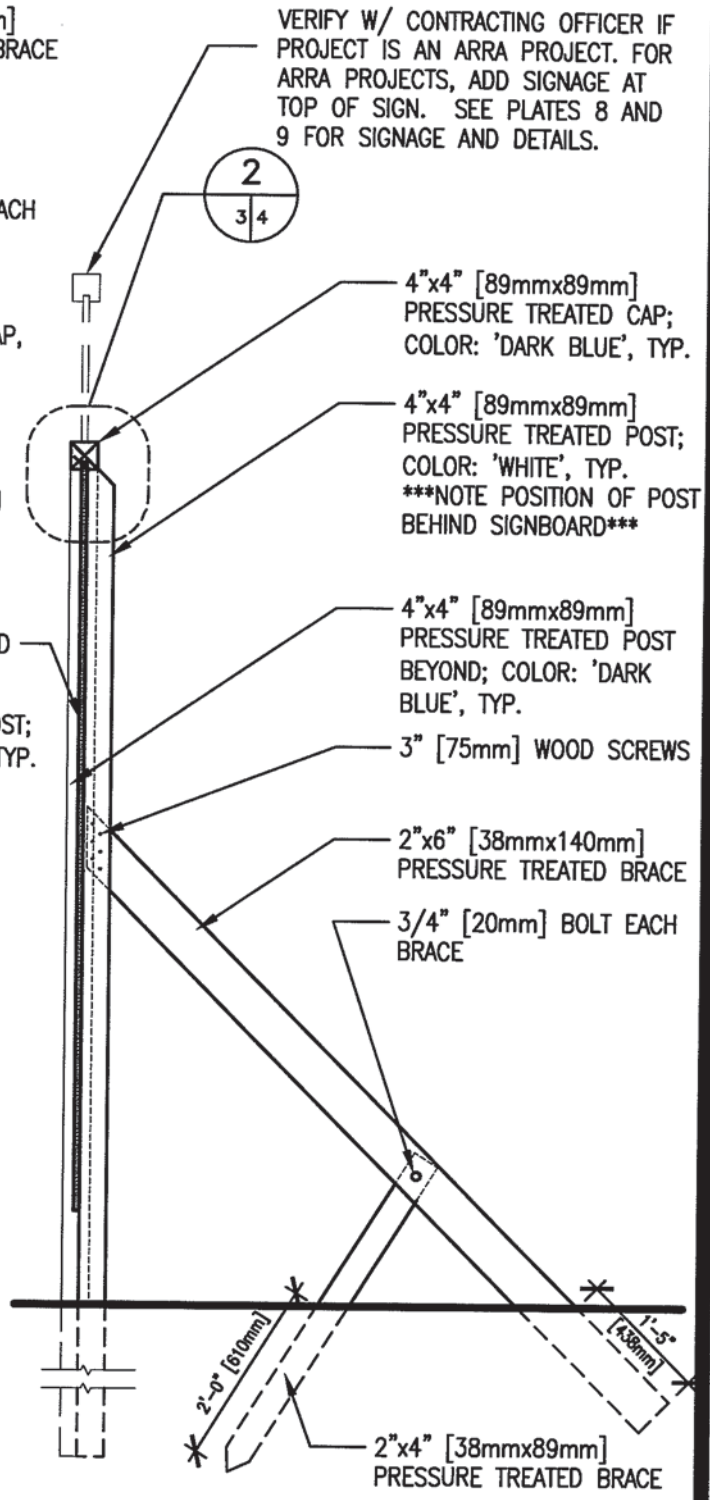

B (1,2|3) SIDE VIEW

SCALE: 1/2" = 1'-0"

PROJECT IDENTIFICATION SIGNBOARD SUPPORT DETAILS

PLATE 3

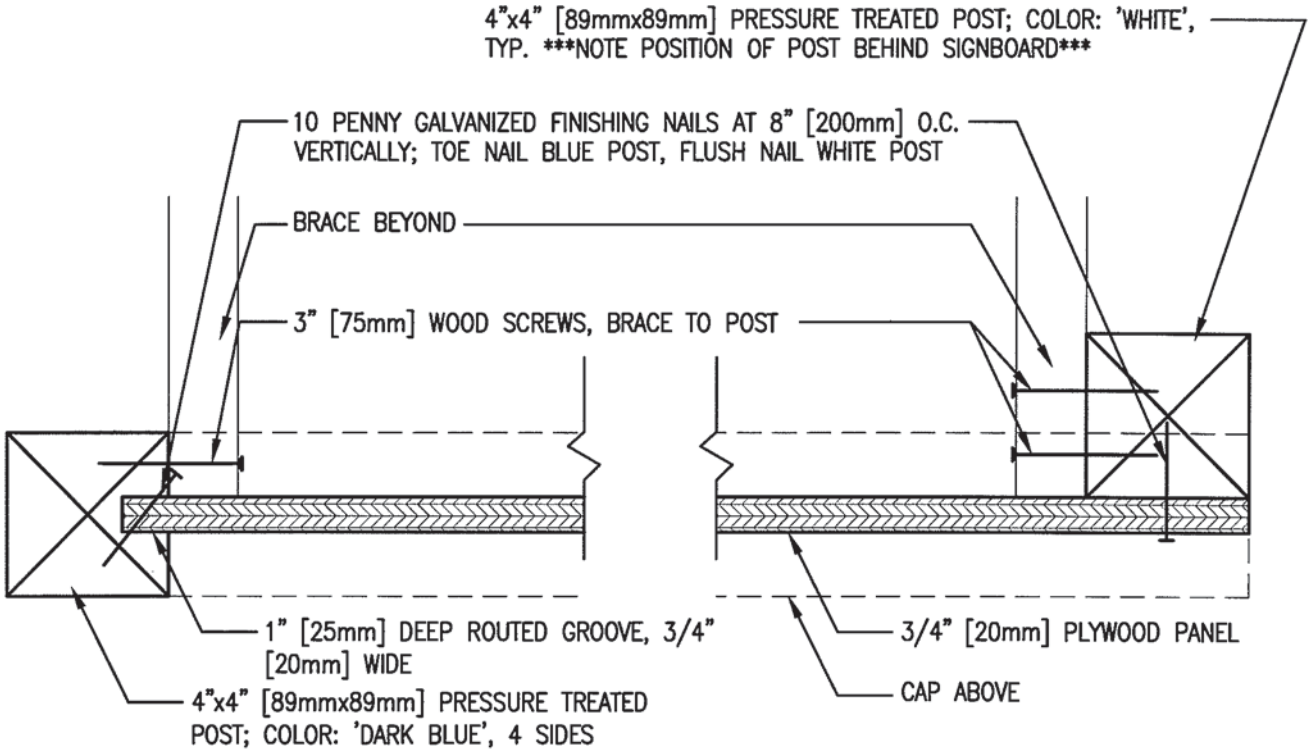

1 PLAN SECTION

1,2 | 4

SCALE: 3" = 1'-0"

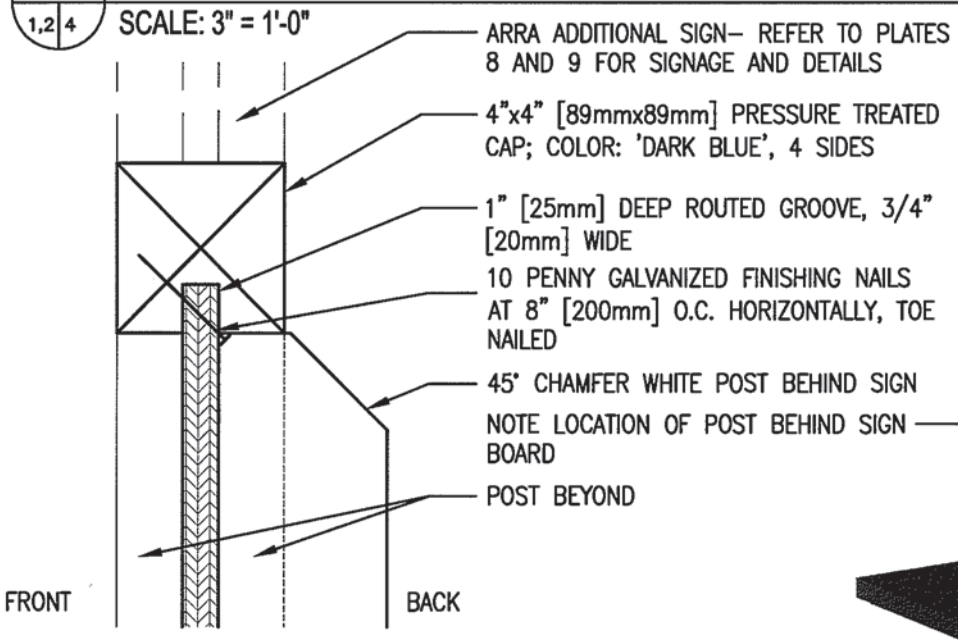

2 SECTION AT TOP

1,2 | 4

SCALE: 3" = 1'-0"

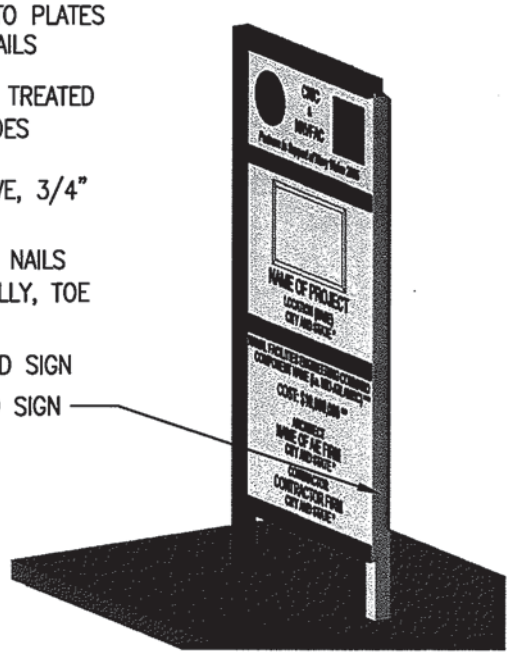

3 ISO VIEW

2 | 4

SCALE: NONE

PROJECT IDENTIFICATION SIGNBOARD SECTIONS

PLATE 4

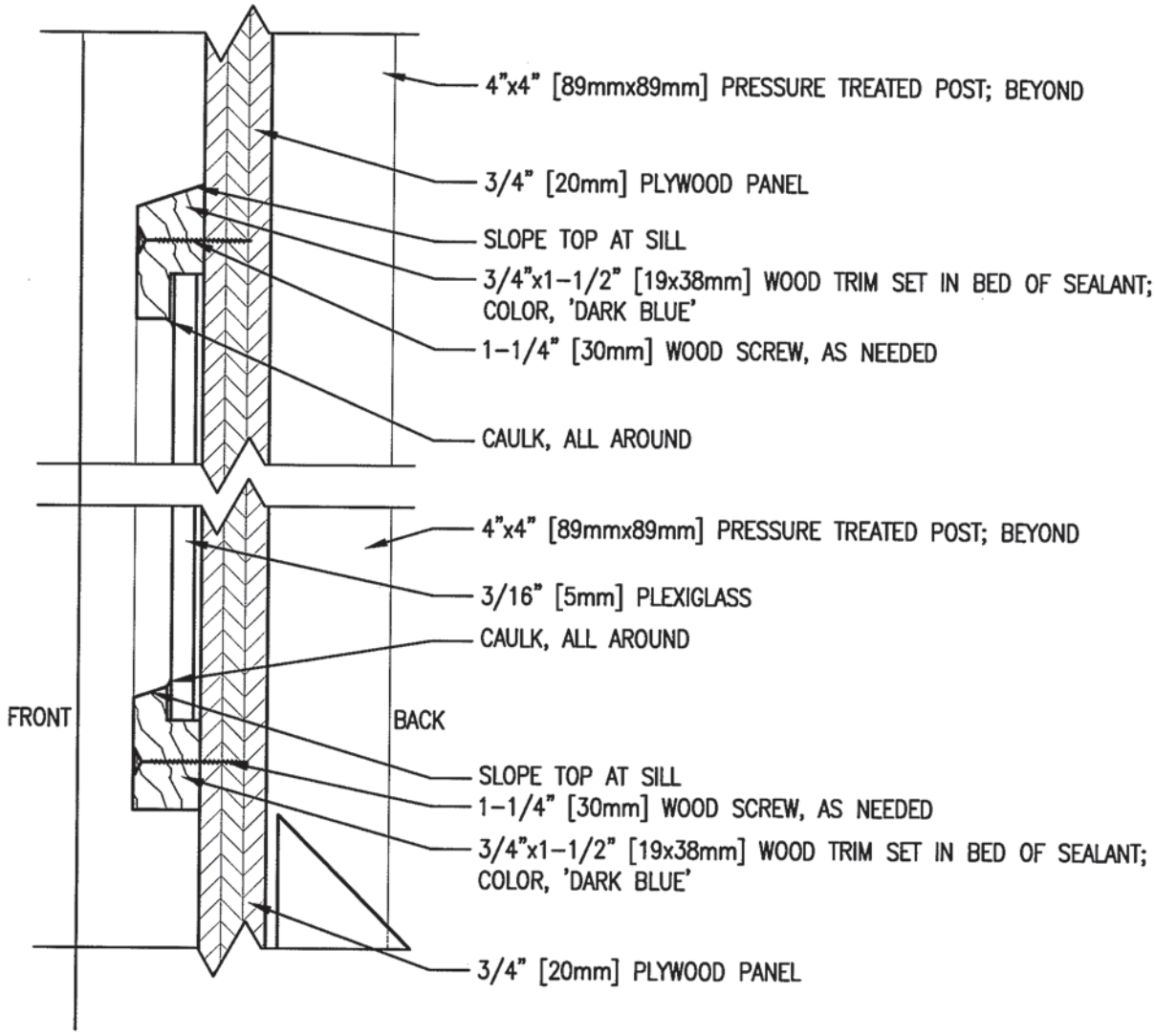

3 / 2|5

SECTION AT RENDERING FRAME

SCALE: 6" = 1'-0"

PROJECT IDENTIFICATION SIGNBOARD SECTION

PLATE 5

SECTION 01 74 19.05 20

CONSTRUCTION AND DEMOLITION WASTE MANAGEMENT FOR DESIGN-BUILD
05/14

PART 1 GENERAL

1.1 GOVERNMENT POLICY

Government policy is to apply sound environmental principles in the design, construction and use of facilities. As part of the implementation of that policy: (1) practice efficient waste management when sizing, cutting, and installing products and materials and (2) divert construction and demolition waste from landfills and incinerators to recycling or reuse.

1.2 SUBMITTALS

The use of a "G" following a submittal indicates that a Government approval action is required. Submit the following in accordance with Section 01 33 00.05 20 CONSTRUCTION SUBMITTAL PROCEDURES.

SD-01 Preconstruction Submittals

Waste Management Plan; G

1.3 DISPOSAL

Except as otherwise specified in other sections of the specifications, dispose in accordance with the following:

1.3.1 Reuse.

Give first consideration to salvage for reuse since little or no re-processing is necessary for this method, and less pollution is created when items are reused in their original form. Consider sale or donation of waste suitable for reuse. Do not use salvaged materials, other than those specified in other sections to be salvaged and reinstalled, in this project.

1.3.2 Recycle.

Make waste materials not suitable for reuse, but having value as being recyclable, available for recycling whenever economically feasible.

1.3.3 Waste

Dispose materials with no practical use or economic benefit at a landfill or incinerator.

PART 2 PRODUCTS

Not used.

PART 3 EXECUTION

3.1 WASTE MANAGEMENT PLAN

Submit waste management plan within 15 days after contract award and prior to initiating any site preparation work. Include the following:

a. Name of individuals on the Contractor's staff responsible for waste prevention and management.

b. Actions that will be taken to reduce solid waste generation.

c. Description of the specific approaches to be used in recycling/reuse of the various materials generated, including the areas and equipment to be used for processing, sorting, and temporary storage of wastes.

d. Characterization, including estimate types and quantities, of the waste to be generated.

e. Actions that will be taken to divert at least the required amount of non-hazardous solid wastes (including waste from construction and demolition operations) from the waste stream. Report actual diversion rates during construction and demolition.

f. Identification of base, local and regional reuse programs, including non-profit organizations such as schools, local housing agencies, and organizations that accept used materials such as materials exchange networks and Habitat for Humanity.

g. List of specific waste materials that will be salvaged for resale, salvaged and reused, or recycled. Identify recycling facilities that will be used. Provide percentage of non-hazardous construction and demolition waste materials that have been diverted from the waste stream.

h. Identification of materials that cannot be recycled/reused with an explanation or justification.

i. Anticipated net cost savings determined by subtracting Contractor program management costs and the cost of disposal from the revenue generated by sale of the materials and the incineration and/or landfill cost avoidance.

3.2 RECYCLING AND DISPOSAL RECORDS

Maintained records to document the quantity of waste generated; the quantity of waste diverted through sale, reuse, or recycling; and the quantity of waste disposed by landfill or incineration. Report with monthly invoicing the tons diverted, the tons sent to the landfill, cost for each, and the monthly diversion rate. Make the records available to the Contracting Officer during construction, and deliver a copy of the records to the Contracting Officer upon completion of the contruction.

-- End of Section --

SECTION 01 78 23

OPERATION AND MAINTENANCE DATA
07/06

PART 1 GENERAL

1.1 REFERENCES

The publications listed below form a part of this specification to the extent referenced. The publications are referred to within the text by the basic designation only.

ASTM INTERNATIONAL (ASTM)

ASTM E1971	(2005; R 2011) Stewardship for the Cleaning of Commercial and Institutional Buildings

1.2 SUBMISSION OF OPERATION AND MAINTENANCE DATA

Submit Operation and Maintenance (O&M) Data specifically applicable to this contract and a complete and concise depiction of the provided equipment, product, or system, stressing and enhancing the importance of system interactions, troubleshooting, and long-term preventative maintenance and operation. The subcontractors must compile and prepare data and deliver to the Contractor prior to the training of Government personnel. The Contractor must compile and prepare aggregate O&M data including clarifying and updating the original sequences of operation to as-built conditions. Organize and present information in sufficient detail to clearly explain O&M requirements at the system, equipment, component, and subassembly level. Include an index preceding each submittal. Submit in accordance with this section and Section 01 33 00 SUBMITTAL PROCEDURES.

1.2.1 Package Quality

Documents must be fully legible. Poor quality copies and material with hole punches obliterating the text or drawings will not be accepted.

1.2.2 Package Content

Data package content shall be as shown in the paragraph titled "Schedule of Operation and Maintenance Data Packages." Comply with the data package requirements specified in the individual technical sections, including the content of the packages and addressing each product, component, and system designated for data package submission, except as follows. Commissioned items without a specified data package requirement in the individual technical sections must use Data Package [3][4][5]. Commissioned items with a Data Package 1 or 2 requirement must use instead Data Package[4][5].

1.2.3 Changes to Submittals

Manufacturer-originated changes or revisions to submitted data must be furnished by the Contractor if a component of an item is so affected subsequent to acceptance of the O&M Data. Submit changes, additions, or revisions required by the Contracting Officer for final acceptance of submitted data within 30 calendar days of the notification of this change requirement.

1.2.4 Review and Approval

The Government's Commissioning Authority (CA) must review the portion of the O&M submittals that pertain to the commissioned systems and equipment for completeness and applicability. The CA

must verify that the systems and equipment provided meet the requirements of the Contract documents and design intent, particularly as they relate to functionality and maintainability. The CA must communicate deficiencies to the Contracting Officer. Upon a successful review of the corrections, the CA must recommend approval and acceptance of these O&M manuals to the Contracting Officer. This work is in addition to the normal review procedures for O&M data.

1.2.5 O&M Database

Develop a database from the O&M manuals that contains the information required to start a preventative maintenance program.

1.3 TYPES OF INFORMATION REQUIRED IN O&M DATA PACKAGES

1.3.1 Operating Instructions

Include specific instructions, procedures, and illustrations for the following phases of operation for the installed model and features of each system:

1.3.1.1 Safety Precautions

List personnel hazards and equipment or product safety precautions for all operating conditions.

1.3.1.2 Operator Prestart

Include procedures required to install, set up, and prepare each system for use.

1.3.1.3 Startup, Shutdown, and Post-Shutdown Procedures

Provide narrative description for Startup, Shutdown and Post-shutdown operating procedures including the control sequence for each procedure.

1.3.1.4 Normal Operations

Provide narrative description of Normal Operating Procedures. Include Control Diagrams with data to explain operation and control of systems and specific equipment.

1.3.1.5 Emergency Operations

Include Emergency Procedures for equipment malfunctions to permit a short period of continued operation or to shut down the equipment to prevent further damage to systems and equipment. Include Emergency Shutdown Instructions for fire, explosion, spills, or other foreseeable contingencies. Provide guidance and procedures for emergency operation of including required valve positions, valve locations and including required valve positions, valve locations and zones or portions of systems controlled.

1.3.1.6 Operator Service Requirements

Include instructions for services to be performed by the operator such as lubrication, adjustment, inspection, and recording gage readings.

1.3.1.7 Environmental Conditions

Include a list of Environmental Conditions (temperature, humidity, and other relevant data) that are best suited for the operation of each product, component or system. Describe conditions under

which the item equipment should not be allowed to run.

1.3.2 Preventive Maintenance

Include the following information for preventive and scheduled maintenance to minimize corrective maintenance and repair for the installed model and features of each system. Include potential environmental and indoor air quality impacts of recommended maintenance procedures and materials.

1.3.2.1 Lubrication Data

Include preventative maintenance lubrication data, in addition to instructions for lubrication provided under paragraph titled "Operator Service Requirements":

a. A table showing recommended lubricants for specific temperature ranges and applications.

b. Charts with a schematic diagram of the equipment showing lubrication points, recommended types and grades of lubricants, and capacities.

c. A Lubrication Schedule showing service interval frequency.

1.3.2.2 Preventive Maintenance Plan and Schedule

Include manufacturer's schedule for routine preventive maintenance, inspections, tests and adjustments required to ensure proper and economical operation and to minimize corrective maintenance. Provide manufacturer's projection of preventive maintenance work-hours on a daily, weekly, monthly, and annual basis including craft requirements by type of craft. For periodic calibrations, provide manufacturer's specified frequency and procedures for each separate operation.

1.3.2.3 Cleaning Recommendations

Provide environmentally preferable cleaning recommendations in accordance with ASTM E1971.

1.3.3 Corrective Maintenance (Repair)

Include manufacturer's recommended procedures and instructions for correcting problems and making repairs for the installed model and features of each system. Include potential environmental and indoor air quality impacts of recommended maintenance procedures and materials.

1.3.3.1 Troubleshooting Guides and Diagnostic Techniques

Include step-by-step procedures to promptly isolate the cause of typical malfunctions. Describe clearly why the checkout is performed and what conditions are to be sought. Identify tests or inspections and test equipment required to determine whether parts and equipment may be reused or require replacement.

1.3.3.2 Wiring Diagrams and Control Diagrams

Wiring diagrams and control diagrams shall be point-to-point drawings of wiring and control circuits including factory-field interfaces. Provide a complete and accurate depiction of the actual job specific wiring and control work. On diagrams, number electrical and electronic wiring and pneumatic control tubing and the terminals for each type, identically to actual installation configuration and numbering.

1.3.3.3 Maintenance and Repair Procedures

Include instructions and a list of tools required to repair or restore the product or equipment to proper condition or operating standards.

1.3.3.4 Removal and Replacement Instructions

Include step-by-step procedures and a list required tools and supplies for removal, replacement, disassembly, and assembly of components, assemblies, subassemblies, accessories, and attachments. Provide tolerances, dimensions, settings and adjustments required. Instructions shall include a combination of text and illustrations.

1.3.3.5 Spare Parts and Supply Lists

Include lists of spare parts and supplies required for maintenance and repair to ensure continued service or operation without unreasonable delays. Special consideration is required for facilities at remote locations. List spare parts and supplies that have a long lead-time to obtain.

1.3.4 Corrective Maintenance Work-Hours

Include manufacturer's projection of corrective maintenance work-hours including requirements by type of craft. Corrective maintenance that requires completion or participation of the equipment manufacturer shall be identified and tabulated separately.

1.3.5 Appendices

Provide information required below and information not specified in the preceding paragraphs but pertinent to the maintenance or operation of the product or equipment. Include the following:

1.3.5.1 Product Submittal Data

Provide a copy of all SD-03 Product Data submittals required in the applicable technical sections.

1.3.5.2 Manufacturer's Instructions

Provide a copy of all SD-08 Manufacturer's Instructions submittals required in the applicable technical sections.

1.3.5.3 O&M Submittal Data

Provide a copy of all SD-10 Operation and Maintenance Data submittals required in the applicable technical sections.

1.3.5.4 Parts Identification

Provide identification and coverage for all parts of each component, assembly, subassembly, and accessory of the end items subject to replacement. Include special hardware requirements, such as requirement to use high-strength bolts and nuts. Identify parts by make, model, serial number, and source of supply to allow reordering without further identification. Provide clear and legible illustrations, drawings, and exploded views to enable easy identification of the items. When illustrations omit the part numbers and description, both the illustrations and separate listing shall show the index, reference, or key number that will cross-reference the illustrated part to the listed part. Parts shown in the listings shall be grouped by components, assemblies, and subassemblies in accordance with the manufacturer's standard practice. Parts data may cover more

than one model or series of equipment, components, assemblies, subassemblies, attachments, or accessories, such as typically shown in a master parts catalog

1.3.5.5 Warranty Information

List and explain the various warranties and clearly identify the servicing and technical precautions prescribed by the manufacturers or contract documents in order to keep warranties in force. Include warranty information for primary components such as the compressor of air conditioning system.

1.3.5.6 Personnel Training Requirements

Provide information available from the manufacturers that is needed for use in training designated personnel to properly operate and maintain the equipment and systems.

1.3.5.7 Testing Equipment and Special Tool Information

Include information on test equipment required to perform specified tests and on special tools needed for the operation, maintenance, and repair of components.

1.3.5.8 Testing and Performance Data

Include completed prefunctional checklists, functional performance test forms, and monitoring reports. Include recommended schedule for retesting and blank test forms.

1.3.5.9 Contractor Information

Provide a list that includes the name, address, and telephone number of the General Contractor and each Subcontractor who installed the product or equipment, or system. For each item, also provide the name address and telephone number of the manufacturer's representative and service organization that can provide replacements most convenient to the project site. Provide the name, address, and telephone number of the product, equipment, and system manufacturers.

1.4 TYPES OF INFORMATION REQUIRED IN CONTROLS O&M DATA PACKAGES

Include Data Package 5 and the following for control systems:

a. Narrative description on how to perform and apply all functions, features, modes, and other operations, including unoccupied operation, seasonal changeover, manual operation, and alarms. Include detailed technical manual for programming and customizing control loops and algorithms.

b. Full as-built sequence of operations.

c. Copies of all checkout tests and calibrations performed by the Contractor (not Cx tests).

d. Full points list. A listing of rooms shall be provided with the following information for each room:

(1) Floor

(2) Room number

(3) Room name

(4) Air handler unit ID

(5) Reference drawing number

(6) Air terminal unit tag ID

(7) Heating and/or cooling valve tag ID

(8) Minimum cfm

(9) Maximum cfm

e. Full print out of all schedules and set points after testing and acceptance of the system.

f. Full as-built print out of software program.

g. Electronic File:

(1) Assemble each manual into a composite electronically indexed file in PDF format. Provide HDD's, DVD's or CD's as appropriate, so that each one contains all maintenance and record files, and also the Project Record Documents and Training Videos, of the entire program for this facility.

(2) Name each indexed document file in composite electronic index with applicable item name. Include a complete electronically linked operation and maintenance directory.

(3) Link the index to separate files within the composite of files. Book mark maintenance and record files, that have a Table of Contents, according to the Table of Contents.

h. Marking of all system sensors and thermostats on the as-built floor plan and mechanical drawings with their control system designations.

1.5 SCHEDULE OF OPERATION AND MAINTENANCE DATA PACKAGES

Furnish the O&M data packages specified in individual technical sections. The required information for each O&M data package is as follows:

1.5.1 Data Package 1

a. Safety precautions

b. Cleaning recommendations

c. Maintenance and repair procedures

d. Warranty information

e. Contractor information

f. Spare parts and supply list

1.5.2 Data Package 2

a. Safety precautions

b. Normal operations

c. Environmental conditions

d. Lubrication data

e. Preventive maintenance plan and schedule

f. Cleaning recommendations

g. Maintenance and repair procedures

h. Removal and replacement instructions

i. Spare parts and supply list

j. Parts identification

k. Warranty information

l. Contractor information

1.5.3 Data Package 3

a. Safety precautions

b. Operator prestart

c. Startup, shutdown, and post-shutdown procedures

d. Normal operations

e. Emergency operations

f. Environmental conditions

g. Lubrication data

h. Preventive maintenance plan and schedule

i. Cleaning recommendations

j. Troubleshooting guides and diagnostic techniques

k. Wiring diagrams and control diagrams

l. Maintenance and repair procedures

m. Removal and replacement instructions

n. Spare parts and supply list

o. Product submittal data

p. O&M submittal data

q. Parts identification

r. Warranty information

s. Testing equipment and special tool information

t. Testing and performance data

u. Contractor information

1.5.4 Data Package 4

a. Safety precautions

b. Operator prestart

c. Startup, shutdown, and post-shutdown procedures

d. Normal operations

e. Emergency operations

f. Operator service requirements

g. Environmental conditions

h. Lubrication data

i. Preventive maintenance plan and schedule

j. Cleaning recommendations

k. Troubleshooting guides and diagnostic techniques

l. Wiring diagrams and control diagrams

m. Maintenance and repair procedures

n. Removal and replacement instructions

o. Spare parts and supply list

p. Corrective maintenance man-hours

q. Product submittal data

r. O&M submittal data

s. Parts identification

t. Warranty information

u. Personnel training requirements

v. Testing equipment and special tool information

w. Testing and performance data

x. Contractor information

1.5.5 Data Package 5

a. Safety precautions

b. Operator prestart

c. Start-up, shutdown, and post-shutdown procedures

d. Normal operations

e. Environmental conditions

f. Preventive maintenance plan and schedule

g. Troubleshooting guides and diagnostic techniques

h. Wiring and control diagrams

i. Maintenance and repair procedures

j. Removal and replacement instructions

k. Spare parts and supply list

l. Product submittal data

m. Manufacturer's instructions

n. O&M submittal data

o. Parts identification

p. Testing equipment and special tool information

q. Warranty information

r. Testing and performance data

s. Contractor information

PART 2 PRODUCTS

Not Used

PART 3 EXECUTION

Not Used
-- End of Section --

SECTION 01 78 24.00 20

FACILITY ELECTRONIC OPERATION AND MAINTENANCE SUPPORT INFORMATION (eOMSI)
08/14

PART 1 GENERAL

1.1 DEFINITIONS AND ABBREVIATIONS

1.1.1 eOMSI Manual

Manual (PDF file) provided by the Contractor that includes, but is not limited to, product information, a facility description with photos, and a list of primary facility systems.

1.1.2 eOMSI Facility Data Workbook (FDW)

A Microsoft Excel Spreadsheet containing a maximum of up to 18 facility asset fields to be populated with the required information by the Designer of Record and Construction Contractor.

1.1.3 Systems

The words "system", "systems", and "equipment", when used in this document refer to as-built systems and equipment.

1.1.4 Computer Assisted Design and Drafting (CADD)

Electronic Computer Assisted Design and Drafting graphic software program that is used to create facility design contract documents and Record Drawings.

1.1.5 KTR

An abbreviation for "Contractor."

1.2 EOMSI MEETINGS

1.2.1 Pre-Construction Meeting

Be prepared to discuss the following during this meeting:

a. eOMSI Manual and eOMSI Facility Data Workbook Development Meetings

b. Processes and methods of gathering eOMSI Manual and eOMSI Facility Data Workbook information during construction.

c. The eOMSI Submittals schedule. Include the eOMSI submittal schedule on the Baseline Construction Schedule.

d. Electronic eOMSI Facility Data Workbook file for Contractor's use and completion.

1.2.2 eOMSI Manual and Facility Data Workbook Coordination and Mutual Understanding Meeting

Facilitate a meeting after the Pre-Construction Meeting prior to the submission of the eOMSI Progress Submittal. Meeting attendance must include the Contractor's eOMSI Manual and Facility Data Workbook Preparer, Designer of Record (DOR), and Quality Control Manager, the Commissioning

Authority (CA), and the Government's Design Manager (DM), Contracting Officer's Representative, and NAVFAC Public Works (PW) Facilities Management Specialist (FMS). Also include the Mechanical, Electrical, and Fire Protection Sub-Contractors as required.

The purpose of this meeting is to reach a mutual understanding of the scope of work concerning the contract requirements for eOMSI and coordinate the efforts necessary by both the Government and Contractor to ensure an accurate collection, preparation and timely Government review of eOMSI.

1.2.3 Facility Turnover Meeting

Include eOMSI in Red Zone (NRZ) facility turnover meetings as specified in Section 01 30 00, ADMINISTRATIVE REQUIREMENTS.

1.3 SUBMITTAL SCHEDULING

1.3.1 eOMSI, Progress Submittal

Submit the Progress submittal when construction is approximately 50 percent complete, to the Contracting Officer for approval. Provide eOMSI Manual Files (Bookmarked PDF) and eOMSI Facility Data Workbook (Excel). Include all elements and portions of system construction completed up to this point.

The purpose of this submittal is to verify progress is in accordance with contract requirements as discussed during the eOMSI Coordination and Mutual Understanding Meeting. Field verify a portion of the eOMSI information.

1.3.2 eOMSI, Prefinal Submittal

Submit the 100 percent submittal of the eOMSI Prefinal Submittal to the Contracting Officer for approval within 90 calendar days of the Beneficial Occupancy Date (BOD). This submittal must provide a complete, working document that can be used to operate and maintain the facility. Any portion of the submittal that is incomplete or inaccurate requires the entire submittal to be returned for correction. Any discrepancies discovered during the Government's review of eOMSI Progress submittal must be corrected prior to the Prefinal submission.

The eOMSI Prefinal Submittal must include eOMSI Manual Files (Bookmarked PDF) and eOMSI Facility Data Workbook (Excel).

1.3.3 eOMSI, Final Submittal

Submit completed eOMSI Manual Files (Bookmarked PDF) and eOMSI Facility Data Workbook (Excel). The Final submittal is due at BOD. Any discrepancies discovered during the Government's review of the Prefinal eOMSI submittal, including the Field Verification, must be corrected prior the Final eOMSI submission.

1.4 UNITS OF MEASURE

Provide eOMSI utilizing the units of measure used in the Government created contract documents.

1.5 SUBMITTALS

Government approval is required for submittals with a "G" designation; submittals not having a "G" designation are for Contractor Quality Control approval. Submit the following in accordance with Section 01 33 00 SUBMITTAL PROCEDURES:

SD-10 Operation and Maintenance Data

SD-11 Closeout Submittals

eOMSI, Progress Submittal; G

eOMSI, Prefinal Submittal; G

eOMSI, Final Submittal; G

PART 2 PRODUCTS

2.1 EOMSI FILES FORMAT

Scan eOMSI Manual Files and eOMSI Facility Data Workbook for malicious viruses using a commercially available scanning program that is routinely updated to identify and remove current virus threats.

Provide four electronic copies to the Contracting Officer for approval, for each submittal required. Provide eOMSI Manual files on CD or data DVD disks using the most current version of Adobe Acrobat or similar software capable of producing PDF files. Provide eOMSI Facility Data Workbook on compact disks (CD) or data digital versatile disk (DVD) disks in (EXCEL) format.

2.1.1 eOMSI Manual Organization

Organize the eOMSI Manuals into three parts: 1) Product and Drawing Information, 2) Facility Information, and 3) Primary Systems. Bookmark the PDF files for easy access to the information.

a. Bookmark Facility Information and Primary Systems to at least one level lower than the major system.

b. Bookmark Product and Drawing Information documents using the current version of CSI Masterformat numbering system, and arrange submittals using the specification sections as a structure. Use CSI Masterformat and UFGS numbers along with descriptive bookmarked titles that explain the content of the information that is being bookmarked.

2.1.2 eOMSI Manual Compact Disk Label and Disk Holder or Case

Provide the following information on the compact disk label and disk holder or case:

a. Building Number

b. Project Title

c. Activity and Location

d. Construction Contract Number

e. Prepared For: (Contracting Agency)

f. Prepared By: (Name, title, phone number and email address)

g. Include the compact disk content on the disk label

h. Date

i. Virus scanning program used

2.2 EOMSI MANUAL

2.2.1 Product and Drawing Information

Provide an organized record of the facility products, materials, equipment, and minimum information necessary to operate the facility. Provide Product and Drawing Information for all systems in the final constructed facility, including the anticipated critical systems identified in this specification section. Organize and bookmark the information for easy access and quick retrieval.

2.2.1.1 O&M Data

As a minimum, include the O&M Data, submitted in the technical specification sections, and in accordance with Section 01 78 23 OPERATION AND MAINTENANCE DATA. Provide the following for each product, material, and system on the project:

a. Materials

b. Equipment

c. Data Sheets

d. Test Reports

e. Warranties

f. Certificates

g. Shop Drawings

2.2.1.2 Utility Record Drawings

Edit original CADD drawings, or original facility design drawings, to eliminate unneeded information, to show and document details of the actual installation of the utility systems; annotate and highlight the eOMSI information. Provide in PDF format. Provide the following drawings at a large enough scale to be clear, legible, and able to differentiate designated isolation units from surrounding valves and switches.

a. Utility Schematic Diagrams - Provide a one line schematic diagram for each utility system such as power, water, wastewater, and gas/fuel. Schematic diagram must show from the point where the utility line is connected to the mainline up to the 1.5-meter(five-foot) connection point to the facility. Indicate location or area designation for route of transmission or distribution lines; locations of duct banks, manholes/ handholes or poles; isolation units such as valves and switches; and utility facilities such as pump stations, lift stations, and substations.

b. Enlarged Connection and Cutoff Plans - Provide enlarged floor plans that provide information between the 1.5 meter(five foot) utility connection point and where utilities connect to facility distribution. Enlarge floor plans/ elevations of the rooms where the utility enters the building and indicate on these plans locations of the main interior and exterior connection and cutoff points for

all utilities. Also enlarge floor plans / elevations of the rooms where equipment is located. Include enough information to enable someone unfamiliar with the facility to locate the connection and cutoff points. Indicate designations such as room number, panel number, circuit breaker, or valve number, of each utility and equipment connection and cutoff point, and what that connection and cutoff point controls.

2.2.1.3 Record Drawings

Provide an electronic copy of the Record Drawings, as specified in Section 01 78 00 CLOSEOUT SUBMITTALS, for the project in PDF format. Bookmark all drawings using the sheet title and sheet number.

2.2.2 Facility Information

Provide the following in Facility Information:

2.2.2.1 General Facility and System Description

Describe the function of the facility. Detail the overall dimensions of the facility, number of floors, foundation type, expected number of occupants, and facility Category Code. List and generally describe all the facility systems listed in the Primary Systems Information and any special building features (for example, HVAC Controls, Sprinkler Systems, Cranes, Elevators, and Generators). Include photographs marked up and labeled to show key operating components and the overall facility appearance.

2.2.2.2 Safety Hazards

List all residual hazards identified in the Activity Hazard Analysis. Provide recommended safeguards for each identified hazard.

2.2.2.3 Floor Plans

Provide uncluttered, legible 29.9 by 43.2 cm(11 by 17 inches) floor plans. Include room numbers, type or function of spaces, and overall facility dimensions on the floor plans. Do not include items such as construction instructions, references, or frame numbers.

2.2.2.4 Floor Coverings, Wall Surfaces, and Ceiling Surfaces

Provide a table that lists by room number (including hallways and common spaces), the type, and area of finish, manufacturer's product name, identifying number, and color. Include a facility summary of the total area for each type of space and floor, wall, or ceiling finish in the table.

2.2.2.5 Windows

Provide a table that lists by room number (including hallways and common spaces), the type of window, window size, number of each size and type, special features, manufacturer's product name, identifying number, and color. The table must include a facility summary of the total number for each type and size of window.

2.2.2.6 Roofing

Provide the total area of each type of roof surface and system. Provide the name of the roofing product and system; manufacturer's, supplier's, and installer's names, addresses, and phone numbers; manufacturer's product name, identifying number, and color. For each type of roof, provide a

recommended inspection, maintenance and repair schedule that details checkpoints, frequencies, and prohibited practices. List roof structural load limits.

2.2.2.7 HVAC Filters

Provide a table that lists the quantity, type, size, and location of each HVAC filter, manufacturer's product name, and identifying number.

2.2.2.8 Plumbing Fixtures

Provide a table that lists by room number, the number
and type of plumbing and bathroom plumbing fixtures (for example, sinks, water closets, urinals, showers and drinking fountains).

2.2.2.9 Lighting Fixtures

Provide a table that lists by room number (including hallways and common spaces), the type of lighting fixture, ballast, number of lighting fixtures, type of lamps and number of lamps, and the manufacturer's product name and the identifying number. The table must include a facility summary of the total number of fixtures of each type and number of lamps of each type.

2.2.2.10 Equipment Listing

Provide a table that lists the major equipment shown on the design equipment schedules. Show the item descriptions, locations, model numbers; and the names, addresses, and telephone numbers of the manufacturers, suppliers, contractors, and subcontractors.

2.2.2.11 Supply Inventory Requirements

Provide a list of maintenance and repair supplies (e.g., spare parts, fuels and lubricants) required to ensure continued operation without unreasonable delays. Identify and list parts and supplies that have long purchase lead times. Give special consideration to facilities at remote locations.

2.2.2.12 Extended Warranty Information

List all warranties for products, equipment, components, and sub-components whose duration exceeds one year. Cross reference the list to the warranty copies provided in paragraph FACILITY INFORMATION or in the paragraph PRIMARY SYSTEMS. For each warranty listed, indicate the applicable specification section, duration, start date, end date, and the point of contact for warranty fulfillment. Also, list or reference all specific operation and maintenance procedures that must be performed to keep the warranty valid.

2.2.3 Primary Systems

The project is anticipated to include, but is not limited to, the following primary systems. Provide training and Operation and Maintenance data for all products, materials, and equipment that make up these systems in the final constructed facility.

a. HVAC facility systems (including chillers, boilers, heat pumps, air handling equipment, exhaust fans, fan coil units, VAV boxes, heat recovery wheels, hot and chilled water hydronic systems, control valves, and backflow preventers).

b. Direct Digital Controls/Space Temperature Controls.

c. Steam condensate pumps, Steam pressure relief valves.

d. Electrical systems (including transformers, diesel electric generator sets, automatic transfer switches, primary switchgear, secondary switchgear, high voltage switches, variable frequency drives, and frequency converters).

e. Fire protection systems and fire alarm detection systems.

f. Site civil water utilities (including water, storm water collection, and treatment systems).

g. Potable water systems (including wells, tanks, pumps, back-flow preventers, filters, disinfection, and controllers).

h. Site electrical utilities (including substations, transformers, and pad-mounted switchgear).

2.2.3.1 Primary Systems Information

Primary Systems Information requires using a systems approach. This approach requires that consideration be given to the entire system (that is, the interfaces of equipment, connections and material flow within the system). Use Notes, Cautions and Warnings throughout the Primary Systems Information to emphasize important and critical instructions and procedures. Provide the following information for each system:

Operation:

(1) System Description - Provide a detailed discussion of the system composition and operation. Include technical details that are essential for an understanding of the system.

(2) Start-Up and Shutdown Procedures - Provide step by step instructions to bring systems from static to operational configurations and from operating to shutdown status.

(3) Normal and Emergency Operating Instructions - Provide a discussion of the normal and emergency operation and control of the system. Address operating norms (for example, temperatures, pressures, and flow rates) expected at each zone or phase of the system. Supplement the discussion with control and wiring diagrams and data. Include shutdown instruction for fires, explosions, spill, or other contingencies.

(4) System Flow Diagrams - Provide a flow diagram indicating system liquid, air or gas flow during normal operations. Integrate all system components into the diagram. A compilation of non-integrated, flow diagrams for the individual system components are not acceptable.

(5) Field Test Reports - Provide Field Test Reports (SD-06) that apply to equipment associated with the system. The eOMSI Manual Submittal does not require the second season HVAC testing.

(6) Operator Servicing Requirements - Provide instructions for services to be performed by the operator such as lubrication, adjustments, and inspection.

(7) Valve List - Provide a list of all valves associated with the system. Show valve type, identification number, function, location and normal operating position.

(8) Operating Log - Provide forms, samples, and instructions for keeping necessary operating records.

(9) Riser Diagrams - Provide riser diagrams and settings of equipment.

2.2.3.2 Preventive Maintenance

Provide information in accordance with paragraph PREVENTIVE MAINTENANCE in Section 01 78 23, OPERATION AND MAINTENANCE DATA.

2.2.3.3 Troubleshooting Guides and Diagnostic Techniques

Provide step-by-step procedures for isolating the cause of system malfunctions. Clearly state indications or symptoms of trouble; the sequential instructions, including checks and tests to be performed and conditions to be sought, to determine the cause; and remedial measures to bring the equipment and system to operating condition. Identify special test equipment required to perform the procedures. Start the troubleshooting guide at the system level and proceed to a level where detailed manufacturer's troubleshooting procedures for equipment and components can be referenced. Provide clear references to repair procedures included in the manufacturer's Product Data.

2.2.3.4 Repair

Provide in accordance with paragraph CORRECTIVE MAINTENANCE (REPAIR) and its subparagraphs in Section 01 78 23 OPERATION AND MAINTENANCE DATA. Provide repair procedures and instructions required for restoring equipment to proper operating condition and standards. References must be specific as to location within the eOMSI Manual.

2.3 EOMSI FACILITY DATA WORKBOOK

A pre-edited draft of the Model & Facility Data Matrix tab within the eOMSI Facility Data Workbook is attached to this section. The Government will provide this eOMSI Facility Data Workbook electronically to the Contractor upon award. Complete the KTR Facility Data File tab based on the selection of master systems, systems, and subsystems installed. The following tabs are included in the eOMSI Facility Data File Workbook and serve the purpose stated:

a. Instructions Tab: Instructions for completing Model & Facility Data Matrix Tab and KTR Facility Data File. If a discrepancy exists between what is required in this section and the Workbook, the instructions within the workbook take precedence.

b. Model & Facility Data Matrix Tab: - The Matrix lists Required Asset Fields for each SYSTEM and SUBSYSTEM defined within the project scope of work. In column "In Scope," choose "Yes" or "No" to define SYSTEMS and SUBSYSTEMS that are within the project scope, and that Contractor needs to include and populate in KTR Facility Data File tab. Check Box on if BIM is required for the project. For BIM projects, Columns for "DISCIPLINE," LOD," "DESIGN MODEL GRADE," and "RECORD MODEL GRADE," are pre-populated and indicate the level of detail required in the design model. These columns disappear for projects that are not BIM. The "Required Facility Asset Field Position Numbers," one through eighteen, are pre-populated, and are not editable.

c. Required Asset Fields Tab: Defines the 18 Required Facility Asset Field Position Numbers used in Model and Facility Data Matrix and KTR Facility Data File tabs.

d. KTR Sample Facility Data File Tab: Sample KTR eOMSI facility data file. This spreadsheet shows an example of the mandatory fields of all equipment to be included in the KTR eOMSI Facility Data File, along with their descriptions.

e. KTR Facility Data File Tab: Required eOMSI facility data file deliverable provided to the Government. Provide a separated and unique new row for each facility component or piece of equipment installed.

PART 3 EXECUTION

3.1 FIELD VERIFICATION

Field verify eOMSI Facility Data Workbook information with Contractor and Government personnel. Include the following personnel in this meeting: Contractor's eOMSI Manual and Facility Data Workbook Preparer and Quality Control Manager, and the Government's Contracting Officer's Representative and NAVFAC PW FMS. Request, and provide, an eOMSI Field Verification Meeting no sooner than 14 calendar days after submission of the Progress eOMSI submittal, and another, no sooner than 14 calendar days after submission of the Prefinal eOMSI submittal. During this meeting, the Government and Contractor will verify that the eOMSI Facility Data Workbook is complete and accurate.

Field verify that at least 5 Subsystems or Subitems under each of the Master Systems are accurate, for a total of 25 Subsystems and Subitems. For each of these items, verify that the required facility asset field, as defined in the "Model & Facility Data Matrix" tab, contains the specified data and it is accurate (i.e. item description, manufacturer, model no., serial no.). 100 percent accuracy of eOMSI information is required for successful field verification. Any discrepancies discovered must be corrected prior to next eOMSI Facility Data Workbook Submittal.

(1) D10 - CONVEYING
(2) D20 - PLUMBING
(3) D30 - HVAC
(4) D40 - FIRE PROTECTION
(5) D50 - ELECTRICAL

-- End of Section --

PART THREE - PROJECT PROGRAM

Project Program

Demolition of the Steam System

Building 11 and Site Distribution Systems
P-816
FY-15 MILCON #1111695

Naval Station Great Lakes
Great Lakes, Illinois

8 April 2015

This page intentionally left blank

TABLE OF CONTENTS

COVER PAGE.....

TABLE OF CONTENTS.....

1. PROJECT DESCRIPTION.....
1.1 Heating Plant Demolition……
1.2 Steam and Condensate Distribution Systems….....
1.3 Building 11 Renovation……
1.4 Hazardous Material Abatement……
1.5 Permitting……

2. PROJECT OBJECTIVES.....
2.1. Mission Statement.....
2.2. Facility Function.....
2.3. Sustainable Design…….....
2.4. Storm Water Management(Low Impact Development).....
2.5. Energy Conservation.....
2.6. Accessibility Requirements…….....
2.7. Antiterrorism Criteria.....
2.8. Appropriate Design.....
2.9. Workflow Process.....
2.10. Special Design Challenges.....

3. SITE ANALYSIS.....
3.1 Existing Site Conditions.....
3.2 Site Development Requirements.....

4. BUILDING REQUIREMENTS……...
4.1. Space Tabulation.....
4.2. Space Relationships.....
4.3. Exterior Character.....

5. ROOM REQUIREMENTS……..
Warehouse/Engine Room.....
High Voltage Secured Storage.....
High Voltage Workshop.....
Locker Room/Restrooms…….....
Break Room……
Office Area……..

6. ENGINEERING SYSTEMS REQUIREMENTS.....
A10 Foundations……
B20 Exterior Closure.....
B30 Roofing.....
C10 Interior Construction.....
C30 Interior Finishes.....
D20 Plumbing.....
D30 HVAC.....
D40 Fire Protection Systems.....

D50 Electrical Power and Lighting.....
F20 Selective Building Demolition.....
G10 Site Preparations.....
G20 Site Improvements.....
G30 Site Mechanical Utilities.....

Part 3 contains the project description, functional and performance requirements, scope items, and expected quality levels that exceed Part 4. Part 4 identifies design criteria, verification requirements, and performance and quality requirements of products. See "Order of Precedence" paragraph in Part 2 for relationships between all parts of this RFP.

1.0 PROJECT DESCRIPTION

Naval Station Great Lakes (NSGL) has implemented a major infrastructure upgrade that will provide a new high efficiency building level heating system in place of the existing central steam system. This upgrade converts all of the existing facilities at Naval Station Great Lakes serviced by the Navy central steam system from a central steam heat source to a building-level heat source and demolishes the existing steam generation and associated distribution systems.

The following provides a project description specific to the demolition operations of the NSGL distribution system including Building 11 with ancillary structures, Building 811, and satellite building 3000. It also provides a description on the renovation of portions of Building 11. The Basis of Design is located in Part 6 Attachments of this RFP and is provided as a conceptual design. The Contractor is responsible for the final design of all modifications required as part of this RFP.

Scope of work for new building heating systems and domestic hot water system installation operations, control system automation and networking, and building level system demolition are provided in a separate RFP, and are not part of this project. That work will be complete before this project begins.

1.1 Heating Plant Demolition

1.1.1 Building 11

Building 11 currently serves as the primary central heating plant for NSGL. Since original construction in 1906, there have been numerous expansions to Building 11 to accommodate both growth in utility demand and to maintain efficient plant operation. At present, equipment in Building 11 supplies both steam and power to serve the heating and domestic hot water needs of over 116 buildings. As part of this project, portions of Building 11 and auxiliary systems serving the plant will be demolished as described in the RFP. Due to the historic nature of the building, portions of Building 11 that remain must be preserved in accordance with State Historic and Preservation Office (SHPO) requirements as described herein.

1.1.2 Building 3000

Building 3000 is a smaller packaged boiler plant that served areas on the western area of NSGL. Building 3000 shall be completely demolished. There are no SHPO related issues with this structure.

1.1.3 Building 811

Building 811 is the existing high voltage shop. Building 811 shall be completely demolished after Building 11 has been renovated and the high voltage shops have relocated to the new space. Slab will remain. There are no SHPO related issues with this structure.

1.1.4 Salvaged Equipment

NAVFAC Midlant recognizes that there is significant salvage value in major equipment to be removed as part of the Building 11 decommissioning. The contractor shall be responsible for proper packaging, marketing and resale for all salvageable items as part of this contract.

A detailed list of major equipment identified for possible salvage from Building 11 has been identified in Part 6.

1.2 Steam and Condensate Distribution Systems

In addition to the Building 11 decommissioning, portions of the steam and condensate distribution system will be demolished. System components to be demolished include above ground steam and condensate piping and associated above ground piping supports. Above ground piping are exterior piping systems supported by ground mounted concrete/steel support structures and/or supported underneath bridge structure. Structures to be partially demolished include associated steam pits. Piping located in tunnels, chases and direct-buried will be abandoned in place.

1.2.1 Above Ground Piping Demolition

The length of above ground steam piping for demolition is approximately 50,000 linear feet. Size range is between 8” and 20” diameter. The length of above ground condensate piping is approximately 50,000 linear feet with a size range between 6” and 8” diameter. Supporting steel and concrete structures shall also be removed as noted on drawings. Additional description and drawing information is provided in Parts 3 and 6.

1.2.2 Steam Pit Demolition

There are approximately 264 steam pits that were identified in the steam and condensate distribution system. Approximately 225 of these pits will be removed per Part 3.2.6.2 and Part 6. Approximately 30 steam pits will remain in place since they are integral to the existing tunnel structures. An additional approximate amount of 12 pits would remain due to the construction of two nodal plants plus another 4 pits for the existing nodal plant at building 3217. An additional 9 steam pits would remain in place due to location (on a slope or integral to building). Approximately 39 pits will require asbestos abatement. Surface conditions around each steam pit include grass, sidewalk and pavement. Upon removal of the steam pits, these areas would be backfilled and finished to match the surrounding area. Additional description and drawing information is provided in Parts 3 and 6.

1.3 Building 11 Renovation

Building 11 Renovation consists of relocating the High Voltage Shops from Building 811 to Building 11 main level during phase out of boilers. The High Voltage Shops new location will be located on the first floor north of existing office and storage rooms. The High Voltage Shops will consist of a warehouse area, offices, locker rooms/bathrooms, break room, workshop and secured storage. A new warehouse area will occupy the north 2/3 of the 1906/1930’s footprint to remain, utilizing first deck. The remaining area outside of the warehouse will take over the south third of first deck to remain (a.k.a. engine room). The existing overhead bridge crane must be removed. This portion of the footprint requires HVAC, both heating and AC. It is anticipated that heat will be provided by the (new) boiler located in adjacent B-12 to serve both facilities. All equipment and appliances shall be new, provided and installed by the contractor. All appliances shall be energy star rated and equivalent to existing size, type and capacity.

The exterior grade of the building shall be altered to provide positive drainage away from the building. A new slab shall be constructed in the building to allow for vehicle access to the interior spaces. The new slab will be subjected to forklift loads, utility trucks and storage racks. The new slab can be constructed either with fill or with another structural solution. Solutions need to be evaluated to insure that no structural degradation will occur to the historic structure. Verify that the concrete slab and the supporting structures will not overload the existing foundations prior to installation.

New construction/alterations shall meet ABA iaw F202.3 of the ABA “Access for People with Disabilities”. See plan below for outline of space that will be renovated under this contract. All renovation to interior and exterior of the building shall conform to SHPO Illinois requirements.

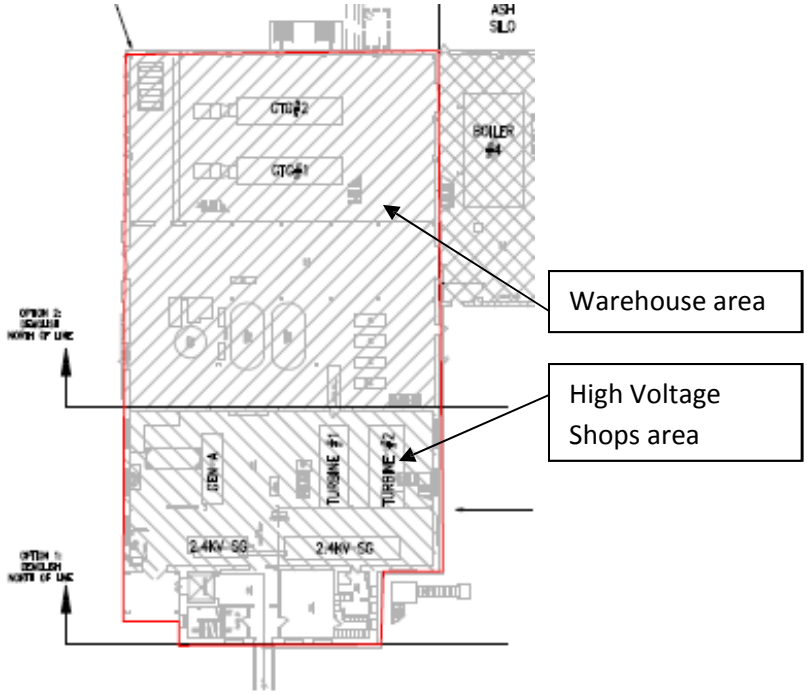

1.4 Hazardous Material Abatement

NAVFAC Midlant contracted a third party to perform the hazardous material survey for Buildings B11, B3000, and site distribution piping. Surveys for B3000 have been completed and are provided in Part 6. Surveys for B11 and site distribution piping if available are provided in Part 6.

1.5 Permitting

Notification of abatement of asbestos is necessary requirement prior to commencement of activity. NAVFAC must review said notification prior to submission to the Illinois Department of Health.

2.0 PROJECT OBJECTIVES

2.1 Mission Statement

This project demolishes the existing steam system. Above ground steam and condensate return lines and steam valve pits and manholes will be removed and associated asbestos will be abated. Underground steam lines will be abandoned in place.

2.2 Facility Function

Building B11 currently serves as the primary central steam generation plant for NSGL. Additional satellite heating plant includes Building B3000. Buildings B11 (partial) (and related structures) and B3000 will be demolished. Portions of B11 will be converted to shops.

2.3 Sustainable Design

Ensure sustainable strategies and features in the design phase are incorporated in the construction phase.

2.4 Storm Water Management (Low Impact Development)

Provide low impact development strategies for compliance with DoD Policy on Implementing Section 438 of the Energy Independence and Security Act (EISA), dated 19 January, 2010 and Penn Memo/NAVY Low Impact Development (LID) Policy, dated 16 November, 2007. Comply with UFC 3-210-10 " LOW IMPACT DEVELOPMENT". These policies are in addition to State or Local storm water management program permit requirements. The DOR shall balance all requirements, Federal, State, Local, LEED and the above stated policies, and acquire required regulatory permits when managing storm water generated.

2.5 Energy Conservation

Energy conservation shall be in accordance with UFC 1-200-02, High Performance and Sustainable Building Requirements.

2.6 Accessibility Requirements

Provide barrier-free design in accordance with the requirements of the DEPSECDEF Memorandum "Access for People with Disabilities" dated Oct 31, 2008. The memorandum updates the DoD standards for making facilities accessible to people with disabilities. The US Access Board issued an update of the accessibility guidelines which the DEPSECDEF Memorandum implements with military unique requirements specified in the memorandum attachment. The new DoD, "ABA (Architectural Barriers Act) Accessibility Standard" (DoD ABAAS) and the DEPSECDEF Memorandum are located at http://www.access-board.gov/ada%2Daba/aba-standards-dod.cfm .

2.7 Antiterrorism Criteria

Facility will have an occupancy designated as low occupancy and UFC 4-010-01 does not apply.

2.8 Appropriate Design

Renovations and modifications to the existing facilities shall be compliant with the UFC and all other requirements specific to the specific building use and type. Provide materials and composition similar to that of the existing construction unless otherwise noted. Provide suitable materials and composition to fully support all components structurally and to provide an exterior envelope having a weather tight integrity meeting or exceeding that of the as built facility.

2.9 Workflow Process

2.9.1 Staffing/Occupancy

The number of occupants specified in the RFP is relative to the building use group and pre-determined occupancy as defined by code. Occupancy used to design building features, such as structural, egress, and plumbing fixtures shall be identified and confirmed by the DOR as required in applicable building or life safety codes and shall be reflected in the full design and respective documents. The DOR is responsible for confirming the occupancy type, number of occupants and ensuring compliance with all codes and governing requirements.

2.10 Special Design Challenges

2.10.1 Historic Preservation

Due to the historic nature of the Building B11, portions of Building B11 that remain must be preserved in accordance with State Historic and Preservation Office (SHPO) requirements.

3.0 SITE ANALYSIS

3.1 Existing Site Conditions

3.1.1 Primary Heating Plant (Building B11)

Since original construction in 1906, there have been numerous expansions to this Building B11 to accommodate both growth in utility demand and to maintain efficient plant operation. These areas of major expansion and/or renovation are depicted in Figure 3.1 and summarized as follows:

- 1906 – Original Construction (Area 5): With the original building, the area currently designated as the engine and pump rooms were constructed.
- 1930's – Boiler #1, 2, 3 Addition (Area 4): In the early 1930's, three coal-fired boilers were installed as the original building was expanded to the north. Coal for the boilers was delivered by elevated rail above the coal storage bunkers just to the south of the boilers. This rail extended into the coal yard area east of the building.
- 1951 – Boiler #4 Addition (Area 3): In 1951, a fourth coal-fired boiler was added by expanding the building east with a capacity of 100,000 lb/hr. This boiler remains in operation but is expected to be decommissioned in the spring of 2015.
- 1965 – Boiler #5/#6 Addition (Area 2): In 1965, two more coal-fired boilers were installed, each with a capacity of producing 250,000 lb/hr of steam. These two boilers are currently decommissioned.
- 1968 – Air Pollution Abatement - Conversion from Coal to Fuel Oil/Natural Gas: A fuel oil system and natural gas pipeline were installed to replace coal as boiler fuel. The coal yard, located east and south of the plant, and all exterior coal conveying and storage equipment was removed. Interior coal conveying equipment, storage bunkers and ash handling equipment remained abandoned in place.
- 1985 – B811 Addition (Area 1): Building B811 was constructed for a fluidized bed boiler demonstration project. The boiler was later removed and the area now serves as an electric room and administration area.
- 1992 – Replacement of Steam Turbine and Diesel Generators (Area 5): Three existing steam turbine generators were replaced with two new steam turbine generators and one diesel engine generator that are currently in operation.
- 2005 – Replacement of Boilers #1,2 and 3 with Gas Turbines (Area 4): Boilers #1, 2, and 3 were removed and two new 5500 kW gas turbine generators and auxiliary systems were installed in this area

At present, equipment in Building B11 supplies both steam and power to serve the heating and domestic hot water needs of over 116 buildings at Great Lakes Naval Station. Figure 3.2 shows a site plan of Building B11 and surrounding areas.

Building B11 contains Boilers #4, 5 and 6 and two (2) heat recovery steam generators (HRSG) associated with two (2) natural gas combustion turbines that generate high pressure steam (350 psig). High pressure steam is reduced to medium pressure steam (125 psig) after being passed through steam turbine generators, ID fan steam turbine drives and a pressure reducing station.

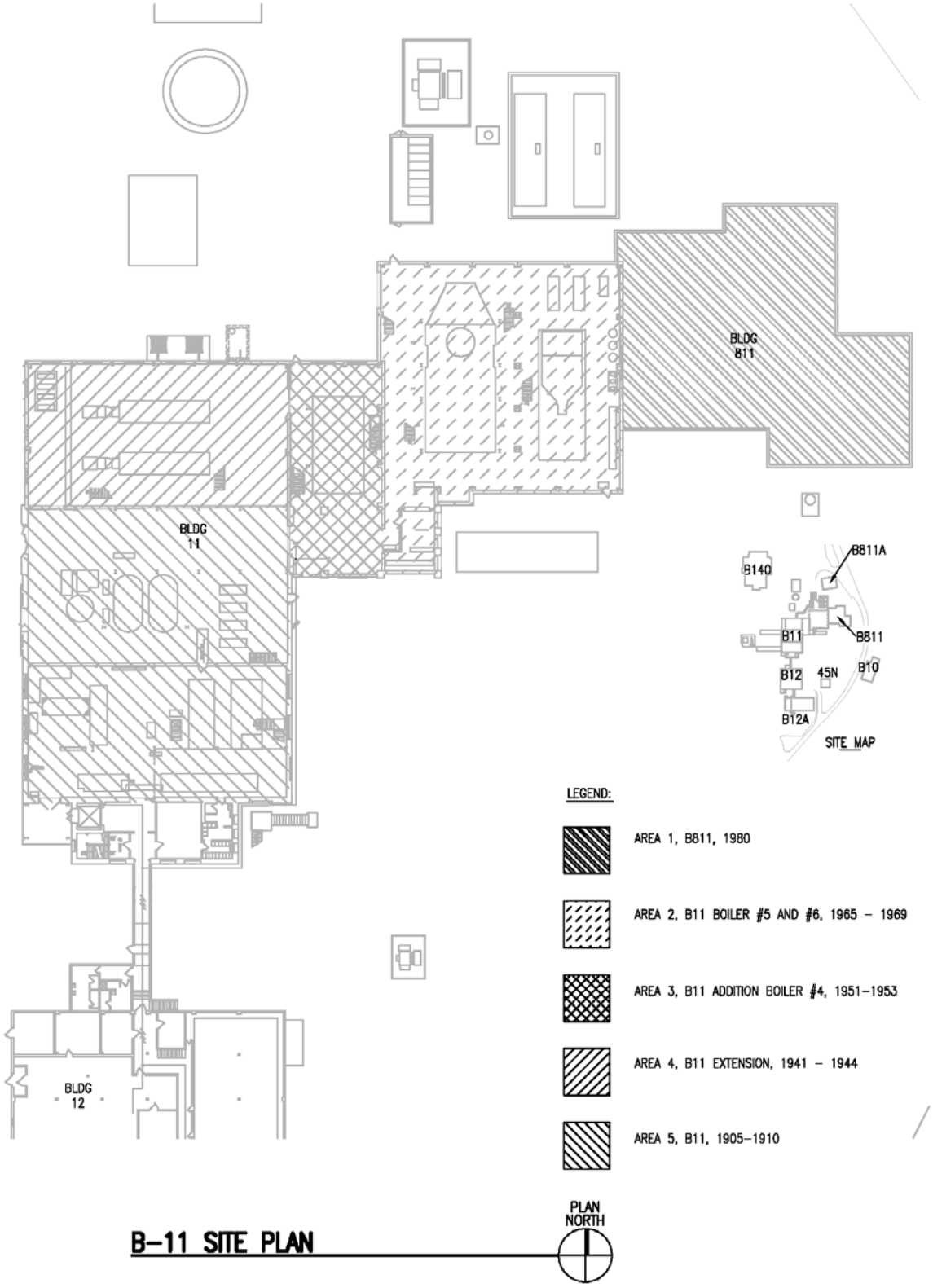

Figure 3.1 – Building B11 Area Descriptions

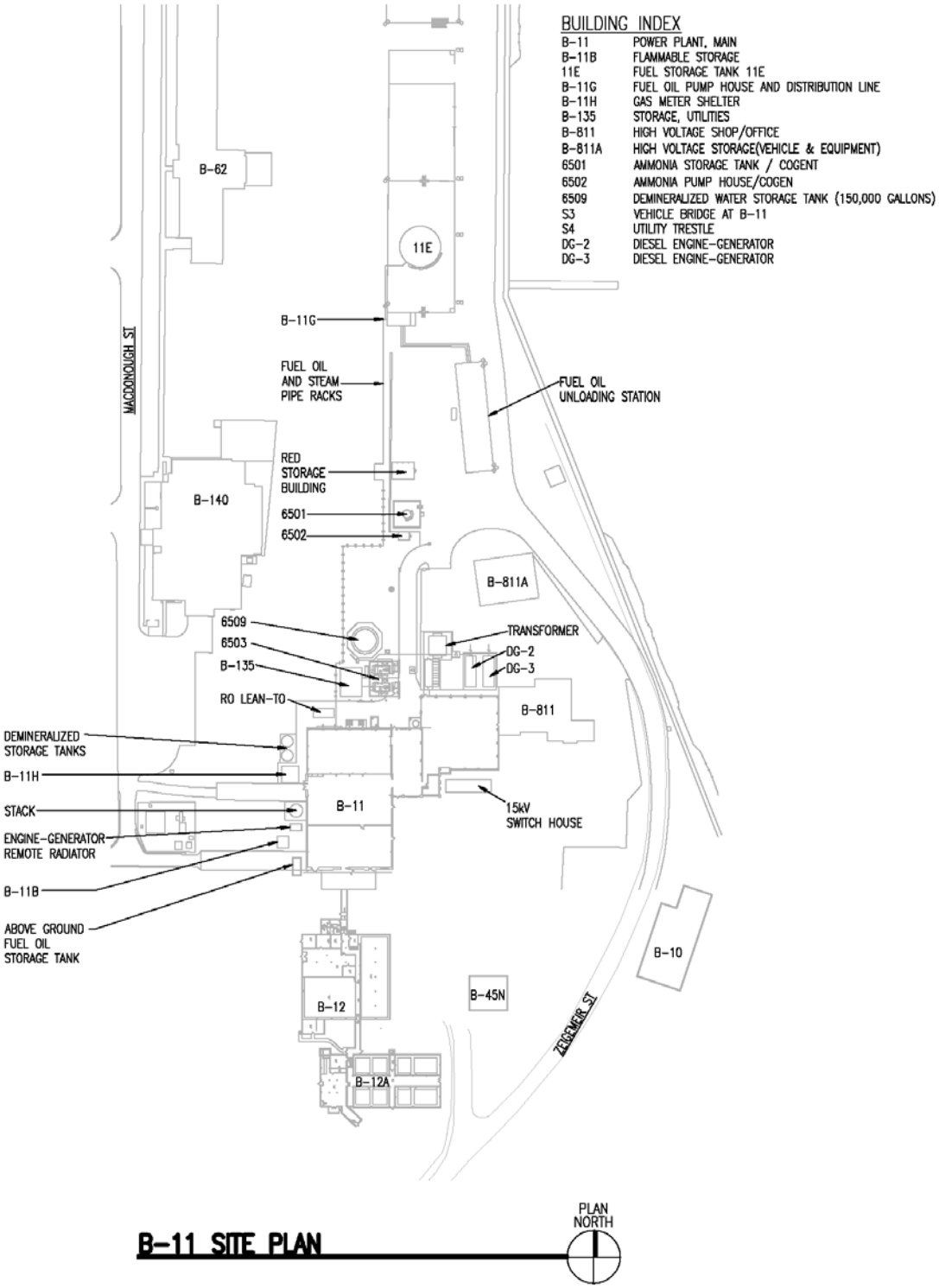

Figure 3.2 Building B-11 and Surrounding Area

The primary fuel for the plant is natural gas supplied from an 8" main entering the site from the west along utility bridge S4. A natural gas compressor station, located in B6503, boosts natural gas pressure for delivery to the combustion turbines. Lower pressure gas is delivered directly to Boilers #4, 5 and 6. Fuel oil, used as a back-up fuel, is stored in a large fuel oil storage tank (11E) north of the plant. Oil transfer pumps deliver fuel oil from the storage tank to the plant for use as a back-up fuel for the boilers, gas turbines and emergency generators.

The plant operating strategy is driven by seasonal variations in steam demand. The peak winter steam demand is approximately 250,000 lb/hr. During summer periods, this demand drops to about 75,000 lb/hr. The intended strategy is to operate both combustion turbines and the HRSG's with duct burners to meet the base load summer steam demand as it fluctuates between 50,000 and 100,000 lb/hr in summer. As steam demand increases, additional boiler capacity is brought on-line. Boiler #4, the smallest boiler, is typically brought on line next. As steam demands increase to above 200,000 lb/hr, either Boiler #5 or #6 is put in operation and Boiler #4 is off-line. During HDR's data collection and survey, it was noted that there were operational issues with the HRSG's due to tube failures. Without the HRSG's in operation, Boilers #4, 5 or 6 are placed in operation to meet steam demand.

Under summer steam load conditions, approximately 12.5 MW of power can be generated when the two combustion turbines are base loaded and 350 psig of high pressure steam is passed through one of the steam turbine generators. As steam demand increases to 160,000 lb/hr, both steam turbine generators can be used to increase power production to 14 MW.

In the context of the Steam Decentralization Project, both the peak winter and base load summer steam demand will fall as buildings are removed from the system. Using the combustion turbines, HRSG's and duct burners, the plant has turndown capability to meet the decreasing loads.

3.1.2 Satellite Heating Plant (Building 3000)

One additional satellite heating plant shall be demolished:

- Building 3000 – This building is approximately 50' x 50' with a height of 25'. This satellite plant has been de-activated and steam lines have been disconnected. There are two gas fired steam generators located in this building. These units are Burnham Boilers with a gas input of 5650MBH. Also in this building is a water conditioning/softening system, condensate receiver/pump unit, and a unit heater for heating the space within the building. Building 3000 is located to the east of Building 8201 and adjacent to outdoor storage space that is west of Great Lakes Drive.

3.1.3 Steam and Condensate Distribution Systems

Medium pressure steam (125 psig) is generated in Building 11 and distributed to the site via four steam mains. Condensate return piping parallels the steam mains. In addition to Building 11, there is a satellite heating plant at Building 3000. Buildings B11 (partial) (and related structures) and B3000 will be demolished. There are four primary types of construction for the distribution system piping: above grade, tunnel, chase and direct burial. These systems are described more in detail as follows:

3.1.3.1 Above-Grade Piping

Above grade piping is steam and condensate piping that is either supported by concrete and steel support structures or hung from existing structures (i.e. bridges); and is required to be removed as part of this project. The length of installed above grade steam and condensate piping is approximately 50,000 linear feet. Steam piping sizes vary from 8" up to 20". Condensate piping varies in size from 6" to 8" diameter. Figure 3.3 shows an example of above grade steam piping supported by concrete structures. Above grade piping sections include the following:

- Tee connected to Steam Pit 103 off of the line from Building 11 to Building 190
- Steam pit 400 to Building 909
- Steam pit 103 to Steam Pit 87A
- Steam Pit 241to Steam Pit 243
- Steam Pit 241to 12th Street
- Steam Pit 113A to Steam 113B
- Steam Pit 87A to Steam Pit 83
- Steam Pit 111 to Steam Pit 112
- Piping on D Street Bridge

Figure 3.3 – Steam Piping Leaving Pit 87A

3.1.3.2 Chases

Chases are shallow trenches constructed out of concrete. Piping installed in the concrete chases is installed throughout the base and are commonly for branch piping from steam mains to buildings. The approximate length of steam piping and condensate piping in chases is approximately 17,248 feet and 16,196, respectively. Steam piping installed in the chases varies in sizes from 1-1/4” to 10” diameter. Condensate piping installed in the chases varies in sizes from 1-1/4” to 6” diameter.

Steam and condensate piping in chases can be left in place “as is”, and no action is required as part of this project.

3.1.3.3 Tunnels

Tunnels are used for the steam and condensate main distribution for buildings located along Dewey Ave. and Perry St. Figure 3.4 shows a typical cross section of the tunnel. Piping installed in tunnels extends to the west to steam pit 6 and then to the south to steam pit 15. Between steam pits 8 and 9 the tunnel extends to the west to steam pit 137. From steam pit 137 the tunnel extends to the south to steam pit 132. The tunnel extends to Building 6 and Building 177. The approximate length of steam piping and condensate piping in the tunnel is approximately 7,239 feet and 3,601, respectively. There is abandoned condensate piping in the tunnels approximately equal in length to the active condensate piping. Steam piping installed in the tunnel varies in size between 4” and 14” diameter. Condensate piping installed in the tunnel varies between 3” and 5” diameter.

There is also a tunnel located on the north end of Main Side and serves steam and condensate to Buildings 833 and 834.

Steam and condensate piping in tunnels can be left in place “as is”, and no action is required as part of this project.

3.1.3.3 Direct Buried Piping

Direct buried piping is the most common steam and condensate piping found on the base. Direct buried steam and condensate piping is either installed with a steel casing with mastic coating or with polyethylene casing. A typical cross section is shown in Figure 3.5. The approximate length of steam piping and condensate piping in chases is approximately 48,358 feet and 40,630 feet, respectively. Direct buried steam piping varies in size from 1-1/2" to 14" diameter pipes. Direct buried condensate piping varies in size from 1" to 8" diameter pipes. The direct buried pipe has the steam or condensate piping with insulation, piping spacers, and a pipe jacket with a protective coating.

Direct buried piping is not required to be removed as part of this project.

Figure 3.5 – Direct Buried Pre-Insulated Pipe

3.1.3.4 Steam Pits

Within the steam and condensate distribution system, there are approximately 263 steam pits. A complete inventory of surveyed steam pits is located in Part 6. Steam pits are required for multiple functions including access to steam tunnels, branch service isolation valves, condensate collection points, and piping expansion control. Construction type varies based on location, purpose and the associated piping system connected to the pit. Steam pits vary in size from 4.5' in diameter to 10'x 20". Steam pit depth was not surveyed but was assumed to average approximately 5 feet deep. Access is provided via removable manhole(s) lid, steel plate, or steel grating. Figure 3.6 is an example of an above grade pit with steel grating for access.

Figure 3.6 – Steam Pit 167C

Figure 3.7 – Steam Pit 36

Figure 3.7 is an example steam pit that is utilized where the piping to and from is installed in a chase. In Figure 3.7, the goosenecks from the pit and the manholes for access. Figure 3.8 is an example of steam pit installed below a sidewalk and has access through a manhole.

Figure 3.8 – Steam Pit 166A

Steam pits have varying types of pit drainage. The following are drainage types are utilized:

- No drainage
- French Drain
- Floor Drain
- Steam Sump Pump
- Electric Sump Pump
- Steam Sump Pump and Electric Sump Pump

Most manholes have cathodic protection test stations used to monitor and prevent corrosion. The tunnel systems are ventilated using a central exhaust fan that pulls ventilation air through the tunnel from intake openings at various locations in the tunnel. Goosenecks extend from several enclosed steam pits not connected to the tunnel to allow for ventilation.

It is known that many older portions of the steam and condensate piping systems contain asbestos containing materials (ACM). A complete survey of site distribution piping is included in Part 6. The following is an overview of ACM findings for the steam distribution system:

- Above Grade Piping: The above grade steam and condensate piping contains a thin layer of ACM and must be treated as such.

- Direct Buried Piping: Any lines installed after 1995 have been indicated as not containing asbestos insulation or mastic. Much of the piping installed after 1995 was installed with a polyethylene coating so no mastic coating was utilized that may contain asbestos. The direct buried piping with a steel casing with a mastic coating is of unknown age but likely installed between 1980 and 1995 may contain an asbestos coating.

- Tunnel: The active condensate piping was installed in the 2005 time frame does not have any asbestos containing materials. The two active steam lines and abandoned condensate piping do not have asbestos present.

- Steam Pits: Fittings/elbows within certain pits contain asbestos.

3.2 Site Development Requirements

The following section describes the decommissioning scope of work for Buildings 11, 3000 and the site steam and condensate distribution systems. For Building 11, overviews of each area as designated in Figure 3.1 are broken down to support scope development. Mechanical and electrical demolition drawings are located in Part 6.

3.2.1 Building B11

3.2.1.1 Area 1 – Bldg 811/811A

Area1 - General Building Description

In 1985, a fluidized bed boiler and associated ancillary equipment was removed from Building 811. The building currently is used for administrative space and storage. Building 811 has a footprint of approximately 7000 sf. Relative to a ground floor elevation of 12'-10 3/4" roof elevation is at 48'-8 ¼" Top of Steel for the portion of the building that served as the fuel feed building and fuel prep building. The portion of the building that served as the boiler building has a roof elevation of 35' 8 ¼". The building exterior is sheet metal wall construction with the west wall adjoining building 11. Internal steel beams provide wall support and support for internal steel platforms. There is an existing concrete floor structure for the old control room.

Area 1 - Major Equipment

Major equipment was removed as part of the 1985 project.

Area1 - Piping Systems

Piping systems are limited to steam and condensate piping associated with building heating. There is desuperheater station and pressure reducing station in the building. In addition there is plumbing piping associated with building roof drains and building plumbing fixtures and floor drains.

Area 1 - HVAC Systems

The existing heating equipment is steam feed unit heaters and steam coils. Steam comes from and condensate is returned to Building B-11. There are roof top HVAC units and exhaust fans installed on the roof of Building 811.

Area 1 - Electrical/Controls

MCC-6 provides 480/277V power distribution for Bldg B-811. MCC-6 is fed from a 300KVA 480Δ-480/277Y transformer. The transformer feeder originates from a 600AF, 400AT setting circuit breaker

located in SWBD001 (Bldg B-11). MCC-6 is rated at 480Y/277V, 3PH, 4W, with a 1600A bus. MCC-6 feeds various loads throughout Bldg B-811.

3.2.1.2 Area 2 - Boiler #5/6

Area 2 - General Building Description

In 1965, two new coal-fired boilers were installed in Area 2, each with a capacity of producing 250,000 lb/hr of steam. These two boilers are presently out of service.

This building has a footprint of approximately 7500 sf. Relative to a basement elevation of 1'9", grade elevation is 12'0" and roof elevation is at 80'-0". The building exterior is brick construction. Internal steel beams provide wall support and support for internal steel mezzanines. In 1968, the plant underwent a conversion from coal to natural gas/fuel oil. The concrete coal bunker remained in place as part of that conversion.

Area 2 - Major Equipment

Steam Generating Unit No. 5 is a 250,000 lb/hr Wicks D-type balance draft natural gas fired steam generating unit. The footprint of this steam generator is approximately 24' x 44' with a total height of approximately 62'. All exterior surfaces of this unit are fitted with insulation and lagging. The waterwall and radiant heat transfer surfaces of this unit could be cut into manageable sizes for demolition, although consideration shall be given for removal of the mud drum and steam drum pressure vessels that are integral to the steam generating unit. The exhaust stack will also need to be considered when developing the demolition plan. This will require removal of not only the stack itself, but also all the structural steel which supports it.

Figure 3.9 – Boiler #5 Stack

The Forced Draft (FD) and Induced Draft (ID) fans for Boiler #5 are each steam driven. The FD fan is located in the basement area at ground elevation 2'-9 ¾". The ID fan is located at platform elevation 41'-1 ¾". The air heater is located on the top of the boiler. This air heater utilizes a steam pre-heater coil. Steam lance sootblowers are also currently installed.

Steam Generating Unit No. 6 is a 250,000 lb/hr Wicks D-type forced draft natural gas fired steam generating unit. The footprint of this steam generator is approximately 16' x 47' with a total height approximately 44'. All exterior surfaces of this unit are fitted with insulation and lagging. The waterwall and radiant heat transfer surfaces of this unit could be cut into manageable sizes for demolition, although consideration shall be given for removal of the mud drum and steam drum pressure vessels that are integral to the steam generating unit. The exhaust stack will also need to be considered when developing

the demolition plan. This will require removal of not only the stack itself, but also all the structural steel which supports it. There are also two security cameras located on the exhaust stack. Cameras will require removal and shall be returned to the government (Security).

The Forced Draft (FD) fan is motor driven. The air heater is located on the top of the boiler. This air heater utilizes a steam pre-heater coil which is supplied by an 8” steam pipe. Steam lance soot blowers are installed. In addition to steam preheat coil there is a Ljungstrom Air Preheater installed that transfer heat from the flue gas stream to combustion air. The Ljungstrom air is installed on the top of the unit as well.

A 16,000 gal deaerator is installed on the north side of steam generating unit no. 6 at platform elevation 41’-1 ¾”. This deaerator is 27 feet in length, with a diameter of 11’ and an overall height of 20’ to include the deaerator and storage tank. This vessel is completely insulated. There is also a safety relief valve located on the steam piping on the equipment. During demolition, this valve and its associated vent piping will require removal. There is also a steel access platform built around this vessel. Steam is supplied through a 20” pipe to the deaerator and the condensate is supplied back to the boiler feedwater pumps BFP-9, BFP-2, and BFP-3.

The steam driven boiler feedwater pump (BFP-9) is non-condensing and takes 350 psi steam and exhausts 3 psi steam to the distribution header. This equipment is located on the ground level elevation 12’-10 ¾” northeast of the steam generating unit no. 6. There is also a safety relief valve located on the steam piping on the equipment. During demolition, this valve and its associated vent piping will require removal.

The continuous blowdown flash tank for units 5 and 6 is located north of unit 6 on the west end of the deaerator at platform elevation 41’-1 ¾”. This vessel is completely insulated.

Area 2 - Piping Systems

An inventory of steam distribution piping was developed for Area 2 shown in Tables 3.1 and 3.2 below. Throughout the area where steam generating units 5 and 6 are located, there are multiple steam headers which support the multiple steam users throughout the plant. Each header is fitted with a safety relief valve. During demolition, this valve and its associated vent piping will require removal. Table 3.2 lists the material quantities associated with these headers.

Table 3.1 – Area 2 Steam Piping

Size	Linear ft.	Weight/ft	Insulation
2”	115	5.0	Yes
3”	155	10.3	Yes
6”	100	28.5	Yes
8”	170	43.4	Yes
10”	95	54.7	Yes
12”	270	65.4	Yes
14”	50	72.1	Yes
18”	170	93.5	Yes
20”	60	104.1	Yes

Table 3.2 – Areas 2 Steam Headers

Size	Length	Rating	Nozzles	Insulation
20”	20’	350#	4	Yes

14”	14’	350#	7	Yes
12”	13’	125#	6	Yes
14”	11’	3#	4	Yes

The natural gas and fuel oil piping distributes the fuel from the Boiler #4 area of the plant to the burners for the Boilers #5 and #6. The burners for Boiler #6 are located on the south end of the boiler. This burner system utilizes 10 different control valves with dedicated piping for each burner to ensure proper flame and heat distribution. The burners for Boiler #5 are located on the east wall of the boiler near the south end. This burner system utilizes multiple control valve and dedicated piping for each burner to ensure proper flame and heat distribution.

Table 3.3 – Areas 2 Natural Gas Piping

Size - Type	Linear ft.	Weight/ft	Insulation
10” NG	35	40.5	No
8” NG	35	28.6	No
6” NG	45	19.0	No
4” NG	150	10.8	No
2” NG	35	3.7	No
6” FO	280	19.0	No
4” FO	25	10.8	No
3” FO	10	7.6	No

Table 3.4 - Area 2 Feedwater Piping

Size	Linear ft.	Weight/ft	Insulation
12”	35	49.6	Yes
10”	265	40.5	Yes
8”	65	28.6	Yes
6”	190	19.0	Yes

There is 2” compressed air distribution piping throughout the boiler area. This piping transports house air which provides multiple maintenance hook-ups throughout the plant, as well as instrument quality dry air which services multiple instruments.

Table 3.5 - Area 2 Compressed Air Piping

Size	Linear ft.	Weight/ft	Insulation
2”	270	2.6	No

Area 2 - HVAC Systems Equipment

There are three steam fed unit heaters on the north end of the unit 5/6 area.

Area 2 - Electrical/Controls

Part 6 contains electrical single line drawings and site electrical drawings that show impacts to the existing electrical systems in Buildings B-11 and B-12. SWBD001, MCC-1 and MCC-5 provide 480V power distribution for Area 2 in Building B-11. This equipment is located in the basement electrical room

south of Boiler #5. SWBD001 is fed from a 1600A circuit breaker located outside Building B-11 in the walk-in Square D “Power Zone” Switch House (See Sheet ED-100A for location). MCC-1 is fed from 1200AF, 1200AT circuit breaker in SWBD001. MCC-5 is fed from a 600AF, 300AT circuit breaker in SWBD001.

3.2.1.3 Area 3 - Boiler #4

Area 3 - General Building Description

In 1951, a fourth coal-fired boiler was added by expanding Areas 4 and 5 east. This boiler remains in operation today. The coal bunker supplying original boilers #1,2 and 3 in Area 2 was extended east with the building expansion. This building has a footprint of approximately 2500 sf. Relative to a basement elevation of 4’6”, grade elevation is 13’6” and roof elevation is at 53’-0”. The building exterior is brick construction. Internal steel beams provide wall support and support for internal steel mezzanines. In 1968, the plant underwent a conversion from coal to natural gas/fuel oil. The concrete coal bunker remained in place as part of that conversion.

Area 3 - Major Equipment

Steam Generating Unit No. 4 is a 100,000 lb/hr Riley D-type balance draft natural gas fired steam generating unit. The footprint of this steam generator is approximately 20’ x 25’ with a total height approximately 32’. All exterior surfaces of this unit are fitted with insulation and lagging. The waterwall and radiant heat transfer surfaces of this unit could be cut into manageable sizes for demolition, although consideration shall be given for removal of the mud drum and steam drum pressure vessels that are integral to the steam generating unit. The exhaust stack will also need to be considered when developing the demolition plan. This will require removal of not only the stack itself, but also all the structural steel which supports it.

Figure 3.10 – Condensate Receiver

The Forced Draft (FD) is motor driven and located at the basement elevation of Boiler #4. The Induced Draft (ID) fan is motor driven and is installed at platform elevation 24’0”. The condensate receiver and pump set is located along the north wall in the basement for Boiler #4.

A shell and tube type feedwater heater which serves Boiler #4 is located on the west side of the boiler at platform elevation 38’-0”. The heater is approximately 18” diameter and 25’ in length. The entire surface of this heat exchanger is covered with insulation and lagging.

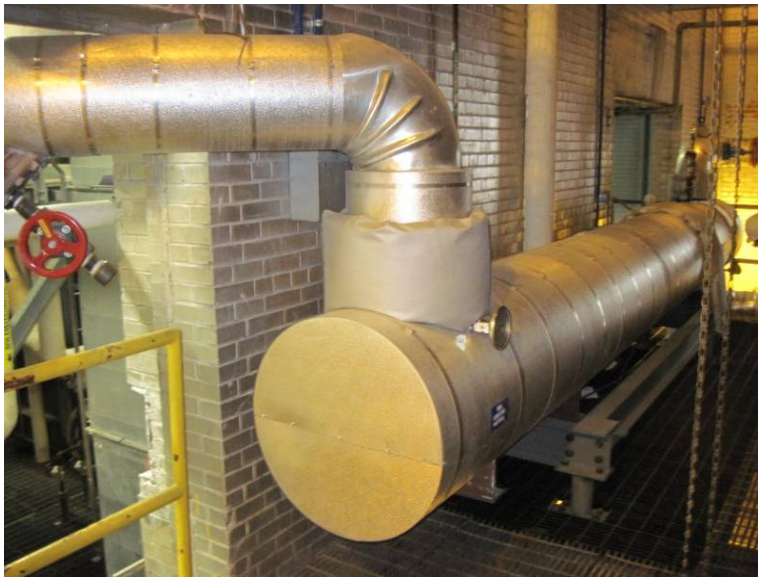

Figure 3.11 – Boiler #4 Feedwater Heater

Area 3 - Piping Systems

There are no steam services on or around Boiler #4, so the only steam piping is that which transports the steam from the boiler to the steam distribution header. There is also a unit heater in this space which utilizes steam.

Table 3.6 - Area 3 Steam Piping

Size	Linear ft.	Weight/ft	Insulation
6”	150	28.5	Yes
1”	50	2.2	Yes

The natural gas and fuel oil piping distributes the fuel from the gas turbine area of the plant to the burners for the steam generating unit no. 4. The burners for unit 4 are located on the south end of the boiler. This burner system utilizes control valves with dedicated piping for each to ensure proper flame and heat distribution.

Table 3.7 - Area 3 Natural Gas Piping

Size-type	**Linear ft.**	**Weight/ft**	**Insulation**
10” NG	35	40.5	No
8” NG	35	28.6	No
6” NG	45	19.0	No
2” NG	35	3.7	No
6” FO	90	19.0	No
2” FO	50	3.7	No

Table 3.8 - Area 3 Feedwater Piping

Size	Linear ft.	Weight/ft	Insulation
6”	35	19.0	Yes

There is 2” compressed air distribution piping throughout the boiler area. This piping transports house air which provides multiple maintenance hook-ups throughout the plant, as well as instrument quality dry air which services multiple instruments.

Table 3.9 - Area 3 Compressed Air Piping

Size	Linear ft.	Weight/ft	Insulation
2”	75	2.6	No

Area 3 - HVAC Systems Equipment

There is a single window heater which takes medium pressure steam from a 1” steam pipe. This heater is located on the wall north of Boiler #4.

Area 3 - Electrical/Controls

Part 6 contains electrical single line drawings and site electrical drawings that show impacts to the existing electrical systems in Buildings B-11 and B-12. Area 3 electrical equipment is fed from SWBD001 and MCC-1, located in the basement of Area 2.

3.2.1.4 Area 4 - Gas Turbines / Control and Pump Room Area

Area 4 - General Building Description

In the early 1930’s, three coal-fired boilers were installed as the original building (Area 5) was expanded to the north. Coal for the boilers was delivered by elevated rail above the coal storage bunkers just to the south of the boilers. This rail extended into the coal yard area east of the building. In 2005, the three coal-fired boilers were replaced with two new gas turbine generators.

This building has a footprint of approximately 4560 sf. Relative to a basement elevation of 4’6”, grade elevation is 13’6” and roof elevation is at 53’-0”. The building exterior is brick construction. Internal steel beams provide wall support and support for internal steel mezzanines. The original concrete coal bunker remains in place just to the south of the gas turbines.

Area 4 - Major Equipment

Gas Turbine Generators (GTG-1, GTG-2) are installed at the building level equal to the basement floor elevation which is below exterior grade level in Building B11. Each unit is a Solar Taurus 60 model 7801 with a rated power generation capacity of 5.5 MW each. This equipment is designed for dual fuel use and the burner skid is piped with both natural gas and fuel oil. Inlet air for this equipment is provided by dedicated ductwork from the combustion air intake filter housing located penthouse of Building B11. Ventilation through the gas turbine enclosure is required. This is achieved by the ductwork on the south end of the gas turbine which provides the ventilation supply from the intake plenum which is connected to the ventilation intake enclosure on the penthouse. The ventilation is exhausted to the north end of the gas turbine through dedicated ductwork which connects to a ventilation enclosure located on the penthouse level. None of the ventilation or intake air ductwork is insulated.

Each turbine has an associated heat recovery steam generator. HRSG-1 and HRSG-2 are installed at the boiler mezzanine platform elevation 24'-9". Each of these steam generators is a Rentech boiler rated for 50,000 lbs/hr of steam production. The duct burners installed in this generator are dual fuel and are connect to both natural gas and fuel oil piping. This steam generator is fitted with an SCR unit. Ammonia is introduced into this SCR unit upstream of the SCR catalyst through 10 nozzles.

The GTG-1/GTG-2 area of the plant contains several instrument air and house air compressors. These compressors are self contained and believed to have significant salvage value.

There are two ammonia vaporizers (one dedicated to each HRSG) installed at the boiler mezzanine platform elevation 24'-9" on the west end of the boilers.

Figure 3.12– Ammonia Vaporizers

The blowdown tanks for the HRSG's are located to the north of the water quality testing area. There are two intermittent blowdown tanks and one continuous blowdown tank.

The fuel oil pump skid supplies the fuel oil from the transport pumps into building 11. These pumps ensure that the steam generating boilers are supplied with a secondary fuel if necessary. These pumps also supply the secondary fuel to the GTG's as well as the HRSG duct burners.

Figure 3.13 – Fuel Oil Pump Skids

There are two duct burner skids located within this area of the plant, one for each HRSG. These skids are located on the mezzanine level on the west end of the HRSG's.

Figure 3.14 – Duct Burner Skids

There are two lube oil coolers located within this area of the plant. These coolers are located outdoors on the north exterior wall of the GTG building.

Figure 3.15 – Lube Oil Coolers

Area 4 - Piping Systems

The steam piping in this area includes all the high pressure steam piping from the HRSG's going to the distribution headers east of the HRSG's. This steam piping is stepped down in pressure and there are also some medium pressure steam headers which feed the steam distribution system for the installation.

Table 3.10 - Area 4 Steam Piping

Size	Linear ft.	Weight/ft	Insulation
2"	105	5.0	Yes
3"	180	10.3	Yes
4"	240	10.8	Yes
6"	325	28.5	Yes
8"	285	43.4	Yes
10"	245	54.7	Yes
12"	400	65.4	Yes
14"	40	72.1	Yes

The natural gas and fuel oil piping distributes the fuel from the fuel oil pump skid and natural gas compressors to the individual gas turbines as well as the duct burner skids for the HRSG's.

Table 3.11 - Area 4 Natural Gas Piping

Size-type	Linear ft.	Weight/ft	Insulation
10" NG	110	10.8	No
6" NG	75	19.0	No
2" NG	90	3.7	No
6" FO	350	19.0	No
2" FO	75	3.7	No

Table 3.12 - Area 4 Feedwater Piping

Size	Linear ft.	Weight/ft	Insulation
6"	55	19.0	Yes
4"	95	10.8	Yes
3"	65	7.6	Yes

The ammonia piping serves two functions. The small bore piping brings the aqueous ammonia into the building and supplies the vaporization skids. The 4" piping distributes the ammonia from the vaporization skids on the mezzanine level to the SCR injection ports on top of the HRSG.

Table 3.13 - Area 4 Ammonia Piping

Size	Linear ft.	Weight/ft	Insulation
4"	160	10.8	Yes
1"	15	1.7	Yes
1/2"	10	0.8	Yes

The 2" lube oil piping circulates the lube oil from the gas turbines to the lube oil coolers on the exterior north side of the building.

Table 3.14 - Area 4 Lube Oil Piping

Size	Linear ft.	Weight/ft	Insulation
2"	165	3.7	Yes

Table 3.15- Area 4 Make-up Water Piping

Size	Linear ft.	Weight/ft	Insulation
10"	85	40.5	No

Table 3.16 - Area 4 Raw Water Piping

Size	Linear ft.	Weight/ft	Insulation
10"	15	40.5	No
3"	55	7.6	No
1"	45	1.7	No

Table 3.17 - Area 4 Vent Piping

Size	Linear ft.	Weight/ft	Insulation
6”	45	19.0	No
4”	45	10.8	No

Table 3.18 - Area 4 Lube Oil Piping

Size	Linear ft.	Weight/ft	Insulation
4”	105	10.8	Yes

There is 2” compressed air distribution piping throughout the boiler area. This piping transports house air which provides multiple maintenance hook-ups throughout the plant, as well as instrument quality dry air which services multiple instruments.

Table 3.19 - Area 4 Compressed Air Piping

Size	Linear ft.	Weight/ft	Insulation
6”	55	19.0	Yes
4”	95	10.8	Yes
3”	65	7.6	Yes

Area 4 - Electrical/Controls

Part 6 contains electrical single line drawings and site electrical drawings that show impacts to the existing electrical systems in Buildings B-11 and B-12. SWBD003, MCC-7 and MCC-8 provide the bulk of the 480V power distribution for Area 4 in Bldg B-11. This equipment is located in the basement of Area 4. SWBD003 is fed from a 3000AF, 1600AT circuit breaker located outside B-11 in the walk-in Square D “Power Zone” Switch House. MCC-7 is fed from 225A circuit breaker in SWBD003. MCC-8 is fed from 225A circuit breaker in SWBD003. A limited amount of equipment in Area 4 is fed from SWBD001 and MCC-1, located in Area 2.

3.2.1.5 Area 5 – Engine Room and Pump Room

Area 5 - General Building Description

Area 5 is the original building constructed in 1906. This building currently contains two steam turbine generators, a back-up diesel generator and electrical switchgear serving B11 and B12. This area also is the central location for condensate return, major steam piping distribution headers and the control room.

This building has a footprint of approximately 4,200 sf for the Pump Room and 5250 sf for the Engine Room. Relative to a basement elevation of 3’0”, grade elevation is 13’6” and roof elevation is at 62’-0”. The building exterior is brick construction. Internal steel beams provide wall support and support for internal steel mezzanines.

To the north of the condensate collection tanks and there is a control room. Control room is prefabricated insulated structure installed in the pump room with it’s own HVAC equipment.

Area 5 - Major Equipment Engine Room

Steam Driven Turbine Generator STG-1 is a Murray frame RJG2 steam driven turbine generator. This turbine is rated for 350 psig steam at 560˚F with an exhaust pressure of 125 psig. With this non-

condensing turbine, the exhaust steam can be utilized within the steam distribution steam throughout the naval installation.

The Ideal Electric AC generator connected to the steam turbine is rated for 1500 kW at 2400V. This equipment is connected to the 2400V feeders in the engine room which then supply the 480V substation. All the equipment associated with STG-1 is integrally skid mounted. This provides an opportunity for straightforward removal and resale at salvage value.

Steam Driven Turbine Generator STG-2 is a Murray frame RJG2 steam driven turbine generator. This turbine is rated for 350 psig steam at 560˚F with an exhaust pressure of 125 psig. With this non-condensing turbine, the exhaust steam can be utilized within the steam distribution steam throughout the naval installation. The Ideal Electric AC generator connected to the steam turbine is rated for 1500 kW at 2400V. This equipment is connected to the 2400V feeders in the engine room which then supply the 480V substation. All the equipment associated with STG-2 is integrally skid mounted. This provides an opportunity for straightforward removal and resale at salvage value.

Emergency Generator DG-1 is a skid mounted Caterpillar model 3516 emergency diesel generator. This equipment is rated for 1360 kW at 2400V. The purpose of this generator is to provide emergency generation upon power loss within the plant to the 2400V feeders in the engine room which then supply the 480V substation. Due to the voltage rating of this equipment, it shall not be used within Building B11 or B12 after the steam generation equipment has been removed. Since the equipment is integrally mounted on the skid, it provides an opportunity for straightforward removal and resale at salvage value.

The overhead bridge crane installed in the engine room serves as an essential tool in maintaining STG-1 and STG-2. This equipment is rated for 14,000 lbs and traverses on rails in an east/west direction.

Area 5 - Major Equipment Pump Room

Boiler pump #2 has a capacity of 315 GPM and Boiler Feed Pumps #3 and #4 are expected to have the same capacity. Boiler Feed Pumps #3 and #4 are scheduled to be replaced in 2012. New VFDs will be installed on Boiler Feed Pumps #3 and #4. To the south of the boiler feed pumps there is boiler feed water heaters installed. Boiler feed water heater currently have flexible piping installed to them.

There are three condensate collection tanks installed to the west of the boiler feed water pumps. The condensate collection tanks have a capacity of approximately 8,333 gallons. Adjacent to the condensate collection tanks there is chemical injection tanks and a chemical feed station. There are two additional polisher pumps located near the condensate collection tanks. Each polisher pump is end suction pump with a 25 hp electric motor. To the south of the condensate storage tanks there are condensate pumps that are horizontal split case pumps with 50 hp electric motors installed.

Area 5 - Piping Systems

The steam piping located within the engine room supplies steam to each of the steam driven turbine generators. The table below captures the steam piping currently installed which shall require removal:

Table 3.20- Area 5 Steam Piping

Size	Linear ft.	Weight/ft	Insulation
6”	45	28.5	Yes
8”	115	43.4	Yes
12”	115	65.4	Yes

Fuel oil piping supplies fuel from the day tank to the emergency generator DG-1.

Table 3.21 - Area 5 Fuel Oil Piping

Size	Linear ft.	Weight/ft	Insulation
2”	55	3.7	No

Cooling water piping which supplies cooling water to DG-1 from the remote radiator located on the west exterior side of the engine room.

Table 3.22 - Area 5 Cooling Water Piping

Size	Linear ft.	Weight/ft	Insulation
2”	35	3.7	Yes
3”	25	7.6	Yes
4”	45	10.8	Yes
5”	80	14.6	Yes

Additional piping associated with the pump room capture under Area piping totals.

Area 5 - HVAC Systems

The inlet air ductwork for DG-1 is approximately 30 ft in length and runs from the diesel generator skid to the west wall where is it terminated at the exterior surface of the wall. This ductwork is approximately 18” x 18” and shares the same structural steel support as the exhaust ductwork and the cooling water piping.

DG-1 has exhaust / silencer piping that extends approximately 30 ft in length to the west wall and then the piping turns vertical outside for an additional 25 feet. The silencer, located indoors, is approximately 8 feet in length and is shown in Figure 3.16. The exhaust piping and silencer are fully insulated and share the same support structure as the inlet air ducting and cooling water piping.

Figure 3.16 – DG-1 Exhaust Silencer Piping

Area 5 - Electrical/Controls

Part 6 contains electrical single line drawings and site electrical drawings that show impacts to the existing electrical systems in Buildings B11 and B12. The following is a summary of major power feeds within this area:

- SWBD002, MCC-2, and MCC-9 provide 480V power distribution for Area 5 in B11. This equipment is located in the basement of Area 5. SWBD002 also provides power for Bldg 12 (B12).
- SWBD002 is fed from 1000kVA 12.47kV-480Y/277V transformer T11-12. T11-12 is fed from switch M61S2 located NE of B45N. Feeder M61 originates in Substation M6A.
- MCC-2 is fed from 800AF, 800AT circuit breaker in SWBD002. MCC-2 provides feeds to loads in B-12.
- MCC-3 is located in BLDG 45N and is fed from a 600A circuit breaker in SWBD002. An alternate feeder is provided for MCC-3 from 500kVA 12.47kV-480Y/277V transformer T45N. T45N is fed from switch M61S2 located NE of B45N. MCC-3 feeds loads in B45N.
- MCC-9 is fed from 800AF, 800AT circuit breaker in SWBD002. MCC-9 provides feeds to loads in B12.
- PP-2 is a 400A, 3PH, 3W panelboard located in the basement of Area 5 and is fed from a 400AF, 400AT circuit breaker installed in SWBD002. PP-2 provides feeds to loads in B12.
- LP-8 is a 110A, 3PH, 4W 208Y/120V 42 circuit panelboard located in the basement of area 5 and is fed from TX-8, a 30KVA 480-120/208V Δ-Y transformer and 100AF, 50AT circuit breaker installed in SWBD002. LP-8 provides feeds to loads in B-12.
- PP-1 is a 3PH, 3W 120/240V panelboard located in the basement of area 5 and is fed from a 75KVA 480-120/240V Δ- Δ transformer and 225AF, 125AT circuit breaker installed in SWBD002. PP-1 provides feeds to loads in B-12.
- LP-5 is a 225A, 3PH, 4W, 42CKT panelboard located in the main office area of B-12. LP-5 is fed from Transformer TX-4, a 75KVA 480-120/208 Δ-Y transformer. TX-4 is fed from a 225AF, 125AT circuit breaker installed in SWBD-002.
- 2.4KV switchgear located in Area 5 is fed from Substation M6, outside to the west.
- Fiber Optic Communication cabling enters the basement of Bldg B-11 through the west wall on the south end of the building. From there, it is routed to the communications equipment rack located on the second floor of Building B-11. This cabling shall remain.

3.2.1.6 Building 11 – Exterior Systems

Engine Generators (DG-2, DG-3)

Engine generators DG-2 and DG-3 are located to the north of Building 11. Each engine generator has a power generation capacity of 2 MW. Both generators are installed in an enclosure with inlet air and exhaust air openings, separate exhaust stacks, and silencers with an injection section of duct and selective catalytic reactor.

The engine generators will remain and provide backup power to the water treatment plant.

Fuel Oil Unloading, Storage and Delivery Systems (11E, 11G)

Fuel oil is stored in a 420,000 gallon fuel oil storage tank (11E) north of the plant. There are four external fuel oil transfer pumps that supply fuel to the four internal fuel oil pumps. The external fuel transfer pumps have a capacity of 130 GPM at 125 psi. The external fuel transfer pumps are located in building 11G. Fuel oil supply and return piping connects the external storage to the internal loads. The fuel oil is utilized as back-up fuel for the boilers, gas turbines and emergency generators.

Removal of the fuel oil unloading storage and delivery system will require the installation of new fuel oil supply pump skid, piping, fuel oil system controls, and storage tank with containment. Fuel oil will be used to supply the two existing engine generators that remain to provide backup power to the water treatment plant. Both diesel engine generators DG-2 and DG-3 have a fuel consumption rate of 139 GPH with belly tanks, each with a capacity of 1,400 gallon. To meet the 24 hours of storage requirement requested by NAVFAC, a new 4000 gallon tank with double wall containment will be required. New piping will be required to connect the new storage tank pump skid and the existing diesel generators.

Ammonia System (6501, 6502)

Aqueous ammonia is stored in10,400 gallon storage tank with a concrete containment dike around the tank. The ammonia transfer pump skid is located in Building 6502 just to the south of the ammonia storage tank. The two ammonia transfer pumps supply aqueous ammonia to a dosing panel that serves the diesel engine generators and to ammonia process control units that serve the HRSGs. The ammonia process control units are located inside Building B11.

The ammonia process control units include the ammonia vaporizer, dilution blowers, and associated controls. The ammonia vapor is supplied to the SCR for each HRSG. The dosing panel utilizes an injection nozzle, compressed air and control panel to regulate the injection into a section of the duct from the diesel engines.

The existing ammonia storage tank, ammonia transfer pump skid, and ammonia process control units will be removed and salvaged. The existing tank will be savaged and the containment will be demolished. The building that currently has the ammonia transfer pump skid will also be salvaged.

A new aqueous ammonia delivery system will be required to serve DG-2 and DG-3. Aqueous ammonia system shall include all components for storage, preparation, and delivery. Delivery system shall be designed to provide aqueous ammonia to existing selective catalytic reactor systems serving diesel generators DG-2 and DG-3. Storage and delivery system shall be designed to meet a minimum of 24 hours of continuous runtime at full load and be installed inside what remains of Building B11.

Natural Gas Compressor House (6503, 11H)

A natural gas compressor station, located in B6503, boosts natural gas pressure for delivery to the combustion turbines. Lower pressure gas is delivered directly to Boilers #4, 5 and 6. The natural gas compression station includes an inlet scrubber, gas compressor, after cooler, coalescing filter and final discharge reheater.

The natural gas compression equipment will be salvaged. The building will be salvaged and foundation will be removed.

Water Storage and Supply (6509)

Previously raw lake water was treated and demineralized for use as boiler make-up. Demineralized water was delivered to a large storage tank (6509) and then pumped to two smaller 16,000 gallon tanks located on the west side of the plant and north of Building 11H. From these tanks, demineralized water is fed to two deaerators that provide boiler feed water to Boilers #4, 5, and 6 and the HRSG's.

Currently make-up water for Boilers #4, 5, and 6 and the HRSG's comes from the 4 RO skids located to the north of B-11.

The demineralized storage tanks and piping will be demolished and the foundation will remain and four RO skids will be salvaged.

Storage Buildings (135)

Storage building 135 is used as an office, general storage and as a valve repair location. This building was a metal building installed on block wall approximately 4 feet tall. This building is approximately 24' x 42' with a height of 14'-6".

Storage Building 135 shall be demolished to slab foundation.

Red Storage Building

Red storage building is located to the North of Ammonia Storage Tank 6501. Storage building is a metal building installed on slab foundation and has a double door access. This building is approximately 15'-8" x 18' with a height of 10'.

Red storage shall be removed by the owner.

Moveable Temporary Storage Buildings

Moveable Temporary Storage Buildings are located to the north of the red storage building. Moveable temporary storage buildings are installed on slab foundations.

Moveable Temporary Storage Buildings are to be removed by the owner.

Above Ground 16,000 Gallon Storage Tanks

Above ground 16,000 gallon storage tanks are located to the west of B-11 and to the north of Gas House B-11H. Storage tanks are installed on slab foundation with concrete stair access to storage tanks.

The above ground storage tanks and associated piping is to be demolished. The slab foundation is to remain.

RO Lean-To

RO Lean-To is located to the North of building 11 and South West of B-135. RO Lean-To has wood frame construction with roll up doors on the east and west sides of the building. The Lean-To contains four RO skids and associated piping. This building is approximately 10' x 20' with a height of 8'

The RO Lean-To shall be demolished along with associated piping. The RO skids shall be salvaged.

RO Chemical Storage Tank Building

RO chemical storage tank building is located along the north wall of building 11. RO chemical storage tank building has wood frame construction installed on approximately an 8" curbed wall. RO chemical storage tank building contains a storage tank and associated piping. This building is approximately 16' x 20' with a height of 16'

The RO chemical storage tank building is to be demolished flush with slab. Storage tank and associated piping is to be demolished.

Flammable Storage Building B-11B

Flammable Storage Building B-11B is located to the west of B-11 and south of B-11 existing stack. Flammable storage building B-11B is a block building installed on slab foundation. This building is approximately 12'-8" x 22'-11" with a height of 10'-2''.

Flammable storage building B-11B is to be demolished to slab foundation. Remove the steam pit cover and provide a metal door with handles. Protect the fiber optic cable from demolition and construction. Verify that the steam pit is suitable for a wet condition.

Trestle S-4

Trestle S-4 extends to the west side of B-11 to the parking lot on the top of the bluff. S-4 carries utility piping from B-11 to an underground tunnel. S-4 has a 17 ft wide concrete deck that cantilevers out over the south side of the steel girders. The pipes are supported by steel trusses that also support a metal shell. There is layer of asphalt over the bridge deck with side handrails. The structure is three span riveted plat deck girder bridge.

There is a large wash out area under and surrounding a concrete stairway that leads from B-11 up the bluff to the tunnel entrance. The Contractor shall be responsible in providing slope stabilization. Refer to drawings in Part 6 for additional information on S-4.

Trestle S-4 is to be demolished to concrete piers.

Above Ground Fuel Oil Storage Tank and Remote Radiator

The above ground fuel oil storage tank and remote radiator are located to the west of B-11 and to the south of the brick stack. The above ground storage provides fuel oil storage for the diesel generator in the engine room. The storage tank is skid mounted inside a containment structure. Fuel piping is routed from the above ground storage tank to the engine-generator inside. The remote radiator is side draft unit with electric powered fan. The remote radiator has engine cooling piping routed overhead to the engine-generator.

The above ground storage fuel oil tank is to be salvaged. The remote radiator will be salvaged as an accessory to the engine-generator.

Chimney (Brick Stack)

The brick stack was constructed around 1906 and is located on the west side of B-11. The brick stack consists of a base, middle and top. The red brick base is approximately 20 feet high. The middle consists of a circular radial red brick shaft, which was retrofitted with an iron band every 10' (approximately). The top consists of a lower terra cotta band, capped by a cast iron coping.

Portion of the brick stack is to be removed and capped which consist of steel framing, metal decking, insulation and roofing material. Refer to drawings in Part 6.

3.2.2 Site Steam and Condensate Distribution Systems

3.2.2.1 Piping System Demolition

All steam and condensate piping designated as above ground piping shall be removed as part of the project. Piping located in tunnels, chase and direct buried will be abandoned in place.

The approximate length of above grade steam piping and condensate piping to be removed is approximately 19,746 feet and 19,487, respectively. Steam piping ranges in size from 8" to 20" in diameter. Condensate piping ranges in size from 6" to 8" in diameter. The following is a summary of the above grade piping sections to be removed:

Table 3.21 – Site Distribution Piping for Demolition

Pipe Section
Tee connected to Steam Pit 103 off of the line from Building 11 to Building 190
Steam pit 400 to Building 909
Steam pit 103 to Steam Pit 87A
Steam Pit 241 to Steam Pit 243
Steam Pit 241 to 12th Street
Steam Pit 113A to Steam 113B
Steam Pit 87A to Steam Pit 83
Steam Pit 111 to Steam Pit 112
Piping on D Street Bridge

All structural steel associated with above grade piping shall be demolished. Structural steel shall include but not limited pipe guides, pipe anchors, access platforms, and miscellaneous support steel.

Concrete support pedestals shall remain for above grade piping not listed in the following piping sections:

Table 3.22 – Site Distribution Piping that have support Pedestals Removed

Pipe Sections
Steam pit 400 to Building 909
Steam Pit 241 to Steam Pit 243
Steam Pit 241 to 12th Street

For pipe sections listed in Table 3.22 the concrete pipe support pedestal shall be removed to 3 feet below grade. After pedestal remove the surface shall be repaired to match existing surface.

Utility trestle 737 which supports piping between steam pit 111 and 112 shall be demolished to concrete pier foundations. Utility trestle 737 is spanned steel structure that carries insulated piping over the Pettibone Creek for an overall length of approximately 147'. The steam and condensate piping and two conduits are carried by galvanized steel structure. There is a metal handrail located on the west side of the structure. Utility trestle 737 may have asbestos and will need to be investigated.

3.2.2.2 Steam Pit Demolition

There are approximately 264 steam pits identified in the steam and condensate distribution system. Of these approximately 225 pits will be removed. Details of each steam pit are located in Part 6. Approximately 30 steam pits and/or access manholes associated with the tunnel system with remain in place to minimize structural impact on tunnel structure. An approximately additional 9 steam pits will remain in place due to their size, location, or are in use by V.A. For each of the approximately 225 steam pits removed, the demolition is to include:

- Steam and condensate piping and associated piping in each manhole
- Sidewalls (demolished three feet down) and floor structure (break up floor slab to allow drainage)
- Manhole access
- Any vent Piping
- Sump drainage / drainage piping
- Cathodic protection and cathodic protection test station

- Backfilling
- Repair of surfaces after removal of the manhole. Surfaces included sidewalks, parking lots, roadways, and lawn areas.
- Disconnect and remove existing electrical service to the steam pit back to source panelboard. Mark circuit breaker as 'spare'.
- Bollards, guard rails, hand rails and pit signage.
- Brick/seal chase and plugged pipes at the building wall to prevent water leaking into the building. Refer to part 6, attachment 19 for chase locations.
- Plug pipes with no chase located at the building wall. Refer to part 6, attachment 19 for pipes location.

The 225 steam pits to be removed vary in size from 4.5 feet in diameter to 10' x 20'.
Steam and condensate pipe size varies depend on pit location. Addition considerations for demolition scope of work include the following:

- Exhaust fan at steam pit 7 to be removed unless owner requires exhaust fan for tunnel ventilation requirements.
- Pit drainage demolition summary:
  a) Electric Sump Pumps: 66 pits
  b) Steam Sump Pumps: 13 pits
  c) Electric and Steam Sump Pumps: 16 pit
  d) French Drain: 1 pit
  e) Floor drain: 9 pits
  f) Note: Drainage was not verified for pits without pit drawings.
- The following steam pits will remain based on size and/or location restrictions:
  a) Steam pit 112 - Located on edge of river bank
  b) Steam pit 137 – Integral to adjacent building
  c) Steam pit 216B – Primary entrance to the utility tunnels serving B833/B834
  d) Steam pit 235 – In use by V.A.
  e) Steam pit 247 – In use by V.A.
  f) Steam pit 248– In use by V.A.
- The following steam pits will remain in conjunction with the 2 nodal steam plants: Steam pits 5, 6, 8, 9, 167 A-D, 418, 418A, 419, 420, 421, 424, 425, 426.
- The removal of the following two pits (49 and 244A) will impact the roadway or street.
- The removal of the following 16 pits (38, 45, 93, 107, 113B, 160, 166, 166A, 168, 168A, 169, 170, 172, 180, 191B, 215) will require repairs be made to parking lots.
- The removal of the following 22 pits (37, 37A, 47, 48, 80, 91, 99, 100, 124, 125, 137, 154A, 167E, 171, 189, 193B, 196, 197, 198, 199, 199A, 200) will require repairs be made to side-walks.

3.2.2.3 Buildings 909 and 1709

There are two additional buildings B909 and B1709 in the site distribution system that shall be demolished. A description of these two buildings is as follows:

- Building B909 – Building 909 is located on the south end of building 933 which is west of Ohio Street This building previously was a satellite heating plant. On the South portion of the building a metal building structure is in place that is approximately 20' x50'. The building has a basement level that has steam and condensate equipment in it. Equipment includes a condensate storage tank, blow off tank and condensate return pumps. There is an existing underground structure to the North that is going to remain.

The west wall of the basement is approximately within 2' of building 933. Removing this wall may undermine building 933. Contractor shall be responsible for investigating and providing solutions.

- Building B1709 - The first level has been demolished down to concrete slab. The basement level remains. The building had approximate foot print of 22' x 33'. There is an existing exhaust fan, a gooseneck, relief piping, and access door to the basement on the slab. Building 1709 is located to the west of Iowa Street and North of 12th Street.

Refer to drawings in Part 6 for additional information on these two buildings.

3.2.3 Substation M6A & Diesel Generator Remote Monitoring

Substation M6A is currently being monitored (and controlled) via the Boiler Control System (BCS). Given the removal of the Gas Turbine Generators (GTG) and the demo of the BCS, the remote monitoring of M6A will need to be transitioned to the Supervisory Control and Data Acquisition (SCADA) system. The M6A node will need to be connected via hard wire (preferred) or radio to the current SCADA network. Physical connection to the network can be made in the Building11, 2nd floor IT closet. The BCS is currently using Subnet software for substation M6A and the diesel generators interface while the SCADA system is currently running on Proficy iFIX.

Monitoring and Control Capabilities to include, but not limited to:

- Remote diesel generator start/stop
- On loss of source, diesel auto start and M6-M6A breaker open (island mode)
- Diesel generator set output and auto run (peak shaving capability)
- Remote breaker operation
- Monitoring of typical parameters (see example screens below)

Screens: Will require the modification and creation of multiple interface screens including but not limited to those listed below.

- Substation M6 34.5kV screen
  - Addition of transformer
  - Addition of M6A to M6 breaker
  - Functionality of "COGEN" button - link to SUB-M6A
- Creation of Substation M6A 12.47kV screen (breaker control)
- Creation of diesel generator screens
  - Overview for control of power output, enable/disable, lead/lag, etc.
  - Generator specific screens for monitoring and control
- Edit all Electric screens with M6A "Go To:" button

Alarms:

- Creation and configuration of numerous alarms for Substation M6A and Diesel Generators

4.0 BUILDING REQUIREMENTS

4.1 Space Tabulation

New spaces that will be incorporated into B-11 High Voltage Shops are: Warehouse/Engine room to the north, Secured Storage, Workshop, Locker room/restrooms, Break room/Kitchen, Offices and Conference space if space allows.

4.2 Space Relationships

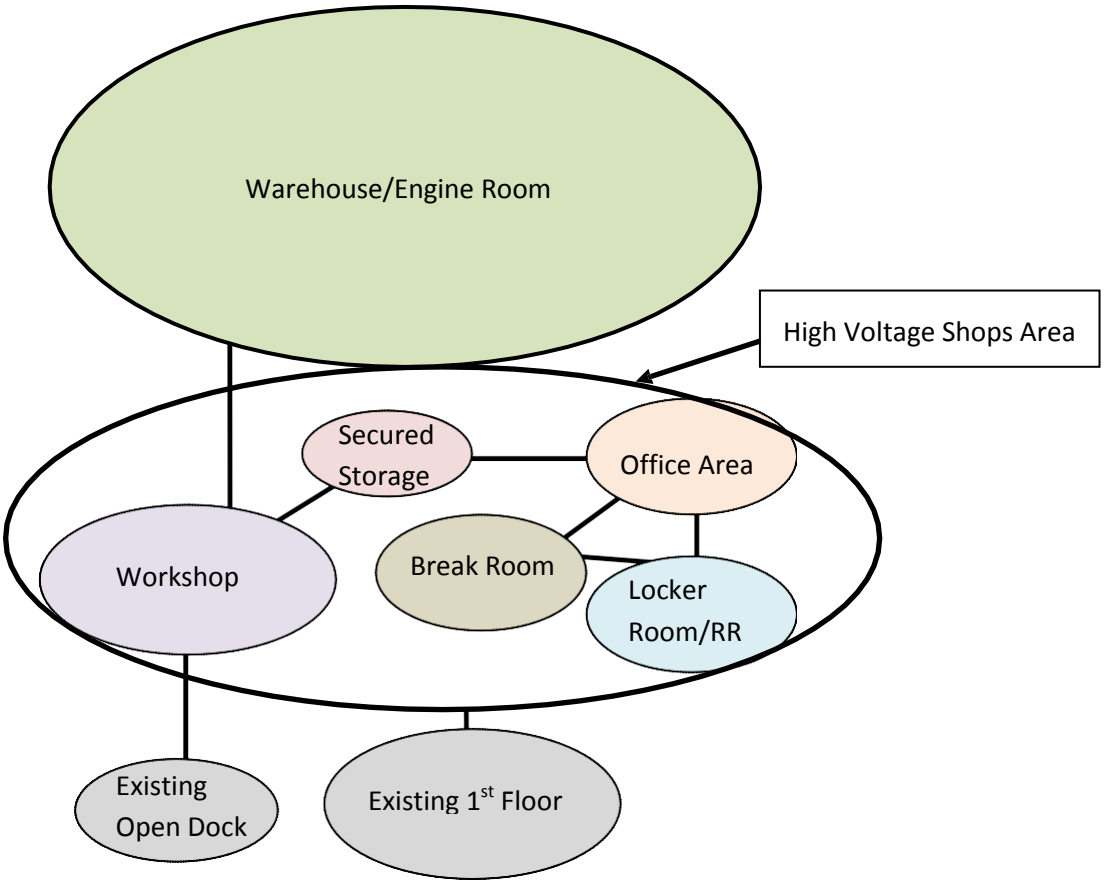

4.3 Exterior Character

Maintain exterior appearances during construction, all exterior additions/renovations shall comply with IL SHPO.

5.0 ROOM REQUIREMENTS

WAREHOUSE/ENGINE ROOM

Space Characteristics

Function/adjacencies: Shall be located at the northern 2/3 of 1906/1930-'s foot print.
Special Dimensions:
Ideal Plan Dimensions: Roughly 9,630 SF
Minimum Ceiling Height: High Bay
Acoustics:
Access:
Number of Occupants:
Other/Special Requirements: Shelving within new warehousing area will be laid out by Shops and will be subject to fork truck traffic, which will control floor slab design. Fork truck is on propane serviced out of a different building. 115v receptacles must be provided in warehousing area. New lighting will be required after industrial equipment and its supporting steel infrastructure is demolished. No requirement for floor drains. No requirement for new potable water. Warehouse area shall have gas infrared heating and exhaust/make-up ventilation. Northeast door on 1930's section shall comply with IL SHPO guidance. Warehousing is currently B-8012 and will be relocated to B-11 by Shops when new space in B-11 becomes available. Warehousing space is identified on the BFR as CCN 890-09 MISCELLANEOUS UTILITY BUILDING. New lighting shall be T8's and occupancy sensors. Staging area outside of B-11 where outdoor storage is indicated does not need to be asphalt, gravel will suffice; see BFR CCN 852-40 40 MISCELLANEOUS OPEN STORAGE OR LAYDOWN AREA.

HIGH VOLTAGE SECURED STORAGE

Space Characteristics

Function/adjacencies: Tool storage area, adjacent to High Voltage Workshop
Special Dimensions:
Ideal Plan Dimensions: 195 SF
Minimum Ceiling Height: 9 feet
Acoustics:
Access: Secured, cipher lock required on door.
Number of Occupants: 0
Other/Special Requirements:

HIGH VOLTAGE WORKSHOP

Space Characteristics

Function/adjacencies: Workshop for High Voltage, adjacent to High Voltage Secured Tool Room and open dock area.
Special Dimensions:
Ideal Plan Dimensions: 1560 SF
Minimum Ceiling Height: 12 Feet
Acoustics:
Access: Needs access to Open dock, see plans and access to new hallway in High Voltage New area.
Number of Occupants:
Other/Special Requirements: Workshop shall have compressed air piping. Work sink to be relocated

(by Contractor) from existing High Voltage Shops Workshop. Ice machine to be relocated (by Shops; needs power, water, possibly drains). Contractor shall provide power, drains, potable water, heating and ventilation for these items. Space to accommodate workbenches, shelving, etc. Must be adjacent to tool room. This work area must be located at the overhead door (southwest) of the engine room. Floor drains and floor tapered to drains are required, which may require some structural modifications to floor. See BFR CCN 219-10 for reference.

LOCKER ROOM / RESTROOMS

Space Characteristics

Function/adjacencies: Shall be adjacent to existing restrooms in southern most part of B-11 and shall be adjacent to new Break room.
Special Dimensions:
Ideal Plan Dimensions: Minimum 450 SF
Minimum Ceiling Height: 9 Feet
Acoustics:
Access:
Number of Occupants: 7 Male and 1 Female
Other/Special Requirements: Have a combined space for Male and Female lockers for Washer and Dryer hook-up. Washer and dryer shall be new and shall be energy star rated. Each male and female locker room shall have one shower. Oversized lockers are required; provide new, oversized lockers are 24x24x93, two per personnel for a total of 16. Provide ventilation, heating, air conditioning, drains, plumbing, and lighting per UFC and code requirements.

BREAK ROOM

Space Characteristics

Function/adjacencies: Shall function as break room and Kitchenette. Shall be adjacent to locker rooms and office area.
Special Dimensions: Minimum 350 SF
Ideal Plan Dimensions:
Minimum Ceiling Height: 9 Feet
Acoustics:
Access:
Number of Occupants:
Other/Special Requirements: Kitchen area shall include location for electric range, shall be new and energy star rated. Kitchen area shall also include microwave, sink, refrigerator (energy star rated), table, seating and couch. A phone will be needed in this location. Heating, ventilation, air conditioning, plumbing and lighting per code and UFC requirements. Lighting shall have occupancy sensors. Provide adequate room for a lounge area as employees are working around the clock.

OFFICE AREA

Space Characteristics

Function/adjacencies: Office area shall include workstations for 3 individuals with one hard-walled office. Office shall have a visual connection and adjacency to Secured Storage.

Special Dimensions:

Ideal Plan Dimensions: Shall have one hard walled office of 100 SF and 2 desk areas or low partition cubical walls of 67 SF each.

Minimum Ceiling Height: 9 Feet

Acoustics:

Access:

Number of Occupants: 3

Other/Special Requirements: Office area shall have room for misc. seating. Adequate outlets for mini-fridge, microwave, computers, etc. 2 NMCI jacks required; NMCI server is on 1st floor. 2nd deck servers are SCADA and NAVFAC legacy. SCADA jack is also required in new offices, to tie into SCADA server. Provide heating, ventilation and air conditioning per UFC and code requirements. Time clock required (power; stand-alone, non-networked). Visual access required between offices and High Voltage Secured Storage. At least 3 phone jacks required; one for each desk and fax machine. No other communications besides phone, NMCI, or SCADA are required.

6.0 ENGINEERING SYSTEM REQUIREMENTS

6. ENGINEERING SYSTEMS REQUIREMENTS

A10 FOUNDATIONS

SYSTEM DESCRIPTION

Provide the building foundation system in accordance with UFC 3-301-01, *Structural Engineering*. Foundation shall be designed to match existing adjacent foundation construction, suit subsurface conditions, and shall be capable of transmitting all building loads to the ground.

In addition, design the structure in accordance with the following loading criteria:

Live Loads

Live loads for occupancies or uses not provided in UFC 3-301-01 shall be as follows:

Occupancy or Use: Warehouse
Uniform Live load: 1500 psf.

A10 GENERAL

The Contractor is required to retain a Geotechnical Engineer experienced and licensed in the geographic region of the project to interpret the Government provided information as related to his design concept and develop geotechnical requirements to support design and construction.

The Contractor shall bear all costs associated with the site preparation, ground improvement and foundations except as allowed by Contract Clause FAR 52.236-2, "Differing Site Conditions". The Contractor's Geotechnical Engineer shall perform subsurface investigation/testing as required to adequately determine all applicable geotechnical factors including the type and capacity of the project foundations. The Contractor's Geotechnical Engineer shall consider the provided information and any additional information obtained and prepare a report as described in other portions of this RFP. The minimum requirements for the subsurface investigation and report are as required by UFC 1-300-09N with associated references.

A1010 STANDARD FOUNDATIONS

As determined by the Designer of Record to be applicable, provide a Standard foundation. "Standard Foundations" are shallow or deep foundations as specifically addressed in IBC Chapter 18. Do not use masonry unit footings, steel grillage footings, timber footings or wood foundations. Treated timber piles may be used if determined acceptable by the Designer of Record.

A1020 SPECIAL FOUNDATIONS

As determined by the Designer of Record to be applicable, provide a Special foundation. "Special Foundations" are any foundation that are not specifically "Standard Foundations", or a combination of Standard Foundations and a site improvement/ground modification system. Examples of site improvement/ground modification systems include surcharging, stone columns, rammed aggregate piers, impact densification, compaction grouting, vibroflotation, etc. As "Special Foundation" techniques or systems typically require the use of specialty contractors, a Professional Engineer shall establish installation and acceptance criteria and supervise the installation. The Designer of Record shall submit justification for use, including acceptable evidence of previous successful installation in similar conditions, methods and equipment used in their installation, proposed testing and inspection to be used, supporting test data, calculations and any other information related to the structural

properties and load capacity of such system. The allowable stresses for piles/piers shall not exceed those limitations specified in UFC 1-200-01.

A1030 SLAB ON GRADE

As determined by the Designer of Record to be applicable, provide a standard concrete slab on grade. Where slab on grade is below the existing adjacent exterior grade, provide water/ damproofing and a perimeter drainage system to remove ground water from the area immediately adjacent to the buildings. Provide perimeter insulation.

A1040 STRUCTURALLY SUPPORTED SLAB

As determined by the Designer of Record to be applicable, provide a structurally supported slab. Provide for support of all utilities that may be adversely affected by soil consolidation or expansive soils. Provide stainless steel supports sized adequately to support the in-service utility. Where the structurally supported slab is below the existing adjacent exterior grade, provide water/damproofing and a perimeter drainage system to remove ground water from the area immediately adjacent to the buildings. Provide perimeter insulation.

--End of Section--

6. ENGINEERING SYSTEMS REQUIREMENTS

B20 EXTERIOR ENCLOSURE

SYSTEM DESCRIPTION

This system consists of the exterior shell of the facility, which includes all vertical and horizontal exterior closure such as exterior walls, exterior windows, and exterior doors. This system excludes roofing (See System B30, *Roofing*). Load bearing exterior walls will be included here, and not in System B10, *Superstructure*. Structural frame elements at exterior such as columns, beams, and spandrels are included in Superstructure, with only the applied exterior finishes (e.g., paint, stucco) being included here. Finishes to the inside face of walls which are not an integral part of the wall construction will be included in System C30, *Interior finishes*.

GENERAL SYSTEMS REQUIREMENTS
B2010 EXTERIOR WALLS

The primary exterior material of the building is brick masonry with terra cotta. Any new brick, terra cotta, mortar, etc. to be installed must match existing adjacent materials.

B201001 EXTERIOR CLOSURE

Provide brick veneer exterior wall closure to match existing as noted.

B201002 EXTERIOR WALL BACKUP CONSTRUCTION

Provide Exterior Wall Construction System (back-up systems for wall veneer) including unit masonry matching existing back-up system as noted.

B2020 EXTERIOR WINDOWS

Exterior windows shall be prefinished aluminum. Design per ATFP requirements for inhabited buildings in controlled perimeter.

B202004 EXTERIOR GLAZING

Glazing color shall match existing glazing.

Glazing shall match existing adjacent type, color, etc.

B203004 OVERHEAD AND ROLL-UP DOORS

Overhead and roll-up doors shall be NAGDM 102 Industrial designation. Design per ATFP requirements for inhabited buildings in controlled perimeter.

Doors for automobile entrances shall be sectional overhead type or] rolling service type. Doors shall have automatic operation. Doors shall be operated by three-button electric power conforming to NEMA MG 1, NEMA ICS 1, NEMA ICS 2, and NEMA ICS 6. with auxiliary hand chain operation.

--End of Section--

6. ENGINEERING SYSTEMS REQUIREMENTS

B30 ROOFING

B30 GENERAL SYSTEM DESCRIPTION

Roof systems shall be watertight and compatible with facility function, construction, and service conditions. New roofing to be installed only where existing-to-be-removed-equipment penetrations are to be patched. New roofing, insulation, decking, etc. to match existing adjacent construction.

B301002 LOW SLOPE ROOFING SYSTEMS

Wind Uplift - The complete roof covering assembly shall match existing Class.

Fire Safety - Complete roof covering assembly shall:

1. Match existing class.

B301003 ROOF INSULATION AND FILL

For fastening roof insulation on low-slope membrane roofs, fasteners shall be place to withstand and obtain an uplift pressure of that which matches existing, adjacent roofing material.

--End of Section--

6. ENGINEERING SYSTEMS REQUIREMENTS

C10 INTERIOR CONSTRUCTION

SYSTEM DESCRIPTION

Interior construction includes interior partitions, interior doors, and fittings for B-11 High Voltage Shops and Warehouse.

Provide durable construction appropriate for the building function. Acoustic properties of materials, as well as durability, shall be considered during material selection.

GENERAL SYSTEM REQUIREMENTS

Areas of the Project subject to abuse require that "impact Resistant" systems be provided.

C1010 PARTITIONS

All interior partitions shall be either concrete masonry or metal studs with gypsum board each side.

C101001 FIXED PARTITIONS

Provide fixed interior partitions. Sound-rated partition assemblies shall have a minimum Sound Transmission Coefficient (STC) of 42 in accordance with ASTM E 90 or ASTM E 413 for frequency data.
Remove fixed partition on 2nd deck conference room that separates storage and conference space.

C101002 DEMOUNTABLE PARTITIONS

Not used.

C101003 RETRACTABLE PARTITIONS

Not used.

C101004 INTERIOR GUARDRAILS AND SCREENS

Provide balustrades where required by code. Provide screens where required to prohibit view of a particular area.

C101005 INTERIOR WINDOWS

Provide aluminum framed, fixed interior windows in office area providing visibility into secured storage room.

Windows shall meet U.L. Classification Rating Level 1 through 8, as required for the installation. Each window shall be a complete factory-assembled unit with glass factory or field installed.

C101006 GLAZED PARTITIONS & STOREFRONTS

Not used.

C101007 INTERIOR GLAZING

Interior glazing shall be clear glass,

C1020 INTERIOR DOORS

C102001 STANDARD INTERIOR DOORS

All interior doors and frames shall be heavy duty with hollow metal frames.

C102002 GLAZED INTERIOR DOORS

Provide vision glazing in doors where it is required by the “Room Requirements” portion of this RFP, or it is deemed advantageous to be able to see through the door, either for safety of pedestrian traffic, or other functional reason.

C102003 FIRE DOORS

Provide interior fire doors as required by code.

C102004 SLIDING AND FOLDING DOORS

Not used.

C102005 INTERIOR OVERHEAD DOORS

Maintain existing.

C102006 INTERIOR GATES

Not used.

C102007 INTERIOR DOOR HARDWARE

Provide hardware in BHMA 630 finish (satin stainless steel), unless specified otherwise.

Provide special door hardware, such as cipher lock at high voltage secured storage.

C102090 OTHER INTERIOR SPECIALTY DOORS

Not used.

C102091 OTHER INTERIOR PERSONNEL DOORS

Not used.

C1030 SPECIALTIES

C103001 COMPARTMENTS, CUBICLES, & TOILET PARTITIONS

Provide solid plastic or phenolic core toilet partitions in all toilet rooms with more than one water closet or urinal.

C103002 TOILET AND BATH ACCESSORIES

Provide toilet and bath accessories in both men's and women's head including soap dispensers, toilet paper holders, recessed paper towel dispenser/waste receptacle combination, grab bars, and bathroom mirrors. Female head shall have one sanitary napkin waste receptacle per bathroom stall. Toilet and bath accessories shall have a stainless steel finish.

C103003 MARKER BOARDS AND TACK BOARDS

Provide marker boards and tack boards in office area. Verify exact location with customer. Marker boards and tack boards are funded as part of the construction contract.

C103004 IDENTIFYING DEVICES

All necessary interior signage shall be incorporated as part of the architectural drawings. Interior signage is not collateral equipment. Interior signage shall demonstrate complete coordination with the facility design, SID and FF&E submittals. Provide interior directional signage as required for facility way finding. Provide an identifying device at each interior door. Signs must meet ADA requirements.

C103005 LOCKERS

Provide oversized lockers (24x24x93) in female and male locker rooms. Install two (2) lockers in female locker room and twelve (12) lockers in male locker room. Lockers shall be metal construction and enamel finish. Lockers are funded as part of the construction contract.

C103006 SHELVING

Provide steel utility shelving. Built-in fixed shelving is funded as part of the construction contract. Shelving layout shall be provided by Shops.

C103007 FIRE EXTINGUISHER CABINETS

Provide fire extinguisher cabinets. Cabinet shall be surface-mounted in new mechanical/electrical spaces and existing wall construction.

C103008 COUNTERS

Provide solid acrylic counter tops and back splashes in wet areas.

C103009 CABINETS

Provide cabinetry and millwork items with associated accessories in Break Room. Cabinetry shall be AWI premium grade and have concealed hinges with adjustable standards for shelves. All exposed surfaces will be covered with high pressure plastic laminate clad.

C103010 CASEWORK

Not used.

C103011 CLOSETS

Not used.

C103012 FIRESTOPPING PENETRATIONS

Provide all sleeves, caulking, and flashing for firestopping penetrations.

C103013 SPRAYED FIRE-RESISTIVE MATERIALS

Provide sprayed fire-resistive materials to the building's framework where required to maintain fire-resistive rating of structural assemblies.

C103014 ENTRANCE FLOOR GRILLES AND MATS

Not used.

C103015 ORNAMENTAL METAL WORK

Not used.

C103090 OTHER INTERIOR SPECIALTIES

Not used.

--End of Section—

6. ENGINEERING SYSTEMS REQUIREMENTS

C30 INTERIOR FINISHES

SYSTEM DESCRIPTION

Interior finishes include wall finishes, floor finishes, wall base finishes, and ceiling finishes.

Provide aesthetically pleasing, functional, durable finishes appropriate to the buildings function. Acoustic properties of materials, as well as durability and ease of maintenance, shall be considered during material selection. Maximize the use of sustainable materials.

Color selections require the use of wall and floor finish material accents to enhance the color and appearance of the interior design. Provide a wall and floor color design that includes a minimum of two different accents colors throughout the facility. Submit pattern drawings of the accents design with the interior design submittal.

Upon demolition of 2nd deck conference room wall, fix carpeted areas where required, paint all walls that are damaged to match existing and add new drop in ceiling.

GENERAL SYSTEMS REQUIREMENTS

See Conceptual wall and floor finishes tables indicated below for specific requirements on "Interior Finishes."

C30 SSPC QP 1 CERTIFICATION

The Project requires industrial coatings on all exposed structural surfaces. All contractors and subcontractors that perform surface preparation or coating application shall be certified by the Society for Protective Coatings (formerly Steel Structures Painting Council - SSPC) to the requirements of SSPC QP 1 prior to contract award, and shall remain certified while accomplishing any surface preparation or coating application.

C3010 WALL FINISHES

Existing paint finishes on exposed masonry and structure shall be repainted according to SHPO requirements.

All interior wall finish materials shall be gypsum board in all rooms and provide ceramic tile in all toilet rooms.

Solid surfacing wall finishes shall extend from top of shower pan to 84" and shall surround the shower enclosure. Wall finish shall extend from top of kitchen countertop to underside of wall cabinet.

Conceptual Wall Finish Schedule for B-11 High Voltage Shops 1st Deck

SPACE	MINIMUM FINISH REQUIREMENT
Private Office	paint, carpet, ceiling tile
Open Office	paint, vinyl tile, ceiling tile
Conference Room (if space allows)	paint, vinyl tile, ceiling tile

Break Room	paint, vinyl tile, ceiling tile
Locker Rooms	paint, ceramic tile, moisture resistant gypsum ceiling
Lobby/ Entrance	paint, vinyl tile, ceiling tile or gypsum ceiling (determine based on design of space)
Corridors	paint, vinyl tile, ceiling tile or gypsum ceiling (determine based on design of space)
Secured Storage	paint, sealed concrete flooring, gypsum ceiling
Workshop	paint, sealed concrete flooring, exposed ceiling to structure
Warehouse/Engine Room	paint, sealed concrete flooring, exposed ceiling to structure

]

C3020 FLOOR FINISHES

Provide floor finish materials to meet the following requirements;

a. Concrete Floor Requirements

Finish concrete surface smooth enough to meet the minimum requirements of this RFP or the floor finish manufacturer's smoothness requirements, whichever is the most restrictive, ensure concrete will not be slippery when wet. Exposed concrete floors that are not required to have an applied floor finish, shall receive a minimum of 3 coats of the manufacturer's approved sealer.

b. Resilient Floor Finishes

Provide resilient floor finishes as identified above or as directed below. Include manufacturer's full line of color, texture and pattern selections, including multi-colored materials.

1) Resilient Tile Flooring

Provide resilient vinyl composition tile (VCT) flooring and areas as indicated above and other similar areas requiring flooring with moderate durability high maintenance and low cost VCT shall be commercial grade, with pattern through thickness of tile VCT with biobased materials or recycled content shall be used where practical.

d. Tile Floor Finishes

Provide epoxy grout for all tile finishes, glazed ceramic tile on walls and ceramic tile flooring in locker rooms/restrooms.

e. Base

Wall base shall be rubber or vinyl, flat throughout.

C3030 CEILING FINISHES

Finished surface of ceiling tiles shall be selected to address acoustical, maintenance, moisture or impact resistance requirements of the room.

Primary ceiling finish shall be 24 inch by 24 in office area, 24 inch x 48 inch by 5/8 inch minimum thickness suspended acoustical panel ceiling system, except for restrooms and showers shall require moisture resistant suspended gypsum board ceiling. Acoustical panels shall have a square edge. Provide fine fissured panel surface. For projects that require a LEED rating provide environmentally friendly panels.

Ceiling finish material shall be gypsum board where noted above.

Exposed structural systems shall be painted according to PTS Section C3040 INTERIOR COATINGS AND SPECIAL FINISHES.

C3040 INTERIOR COATINGS AND SPECIAL FINISHES

Paint all interior exposed surfaces including metal items, such as interior grilles, registers, diffusers, access panels, and panel boxes.

Provide special impact resistant coatings in workshop and warehouse area.

All finish coatings shall be as indicated above portion of this RFP.

--End of Section--

6. ENGINEERING SYSTEMS REQUIREMENTS

D20 PLUMBING

Refer to Part 4 Section D20 for performance requirements of the building elements included in the plumbing system.

SYSTEM DESCRIPTION

The plumbing system for Building B11 consists of all potable cold and hot water piping and equipment, piping insulation, water heating equipment, sanitary waste and vent piping systems, and other specialty piping and equipment within 5 foot (1.5 meter) of the building.

GENERAL SYSTEM REQUIREMENTS

Provide working space around all equipment. Provide concrete pads under all equipment. Provide all required fittings, connections and accessories required for a complete and usable system. All equipment shall be installed per the criteria of PTS section D20 and the manufacturer's recommendations. Design and installation shall be in accordance with IPC and UFC 3-420-01, *Plumbing Systems*. Where the word "should" is used in the manufacturer's recommendations, substitute the word "shall".

Include the hot water and compressed air systems to list of systems to be commissioned in accordance with Project Program Section 2.3.3.

D2010 PLUMBING FIXTURES

Provide quantity and type of plumbing fixtures required for the occupancy, use, and functions described for this facility of High Voltage Shops. Refer to Room Requirements Section for additional specific requirements for spaces with plumbing fixtures. Provide handicapped fixtures in accordance with the referenced criteria in the Project Program.

D201001 WATER CLOSETS

Refer to Room Requirement Section for the number and type of water closets required.

Provide floor mounted flush valve water closets with electronic flush control in all public restroom spaces.

D201002 URINALS

Refer to Room Requirement Section for the number and type of urinals required.

Provide flush valve urinals with electronic flush control in all public restroom spaces.

D201003 LAVATORIES

Refer to Room Requirement Section for the number and type of lavatories required.

Provide wall mounted lavatories made of vitreous china, with shelf back with electronic control in all public restrooms. Provide pop-up drain.

D201004 SINKS

Refer to Room Requirement Section for the number and type of sinks required.

Provide countertop kitchen sink with two compartments in the High Voltage Shop Break Room space. Provide waste disposer unit.

Provide service sink in the High Voltage Shop Workshop space.

Provide mop sink in the janitorial spaces.

Provide laundry sink in the High Voltage Shop Locker Room/Restroom space.

D201005 SHOWERS/TUBS

Refer to Room Requirement Section for the number of showers required.

Provide a one piece fiberglass (FRP) shower floor and shower supply fittings in the High Voltage Shop Locker Rooms/Restroom space for both male and female rooms.

D201006 DRINKING FOUNTAINS AND COOLERS

Refer to Room Requirement Section for the number and type of water coolers required.

No HCFC or CFC refrigerants shall be used in water coolers, only refrigerants listed in US EPA SNAP may be used.

D201090 EMERGENCY FIXTURES

Provide emergency eyewash in the High Voltage Shop Workshop space.

Provide tepid water with water tempering valve assembly.

D2020 DOMESTIC WATER DISTRIBUTION

D202001 PIPES AND FITTINGS

Provide Copper tubing and fittings for above ground.

D202002 VALVES & HYDRANTS

Provide isolation valves at supply each piece of equipment. Provide hose bibbs in mechanical rooms and the High Voltage Shop Workshop. Provide hose bibbs along the building exterior such that all points along the perimeter can be reached with a 100 foot (30 meter) long hose.

D202003 DOMESTIC WATER EQUIPMENT

Provide backflow preventers of types and at points within domestic water systems as specified by IPC. Locate inside the mechanical room on service entrance lines where not provided exterior to the building.

Provide natural gas water heater for heating of domestic water.

Provide in-line circulator for domestic hot water distribution system.

Provide water tempering valve assembly.

D202004 INSULATION & IDENTIFICATION

Provide mineral fiber insulation with vapor barrier on domestic hot water supply and recirculation piping. Provide cellular glass insulation with vapor barrier on domestic cold water supply piping. Provide identification for piping and equipment.

D202005 SPECIALTIES

Provide washing machine connector box for clothes washer. Provide ice maker connector box for new energy star rated refrigerator. Provide valve box for buried valves.

D202090 OTHER DOMESTIC WATER SUPPLY

Provide piping supports in accordance with the IPC. Provide inspections, disinfection, and testing in accordance with the IPC.

D2030 SANITARY WASTE

D203001 WASTE PIPE & FITTINGS

Provide cast iron hub and spigot pipe and fittings, rubber compression gasket joints for below ground installation.

Provide cast iron hubless pipe and fittings, rubber compression gasket joints for above ground installation.

D203002 VENT PIPE & FITTINGS

Provide cast iron hubless pipe and fittings, rubber compression gasket joints.

D203003 FLOOR DRAINS

Provide floor drains in the High Voltage Shop Workshop, mechanical rooms, restrooms, near backflow preventers, near emergency eye wash stations, near air handling units, and plumbing chase areas. All floor drains shall be kept outside walkways and heavily travelled areas and shall be provided with deep seal traps and automatic trap primers when infrequently used.

D203004 SANITARY & VENT EQUIPMENT

Not applicable.

D2040 RAIN WATER DRAINAGE

D204001 PIPE & FITTINGS

Provide Cast iron hubless pipe and fittings above ground.

D204002 ROOF DRAINS

Provide roof drains that are compatible with the roofing system.

D204004 INSULATION & IDENTIFICATION

Provide the same as domestic water piping.

D2090 OTHER PLUMBING SYSTEMS

D209001 SPECIAL PIPING SYSTEMS

Obtain natural gas pressures from the local gas utility provider, North Shore Gas. Contractor is responsible for any applications and permits, and shall provide the complete natural gas system from the load side of the utility meter to the heating equipment. The Contractor shall have the local gas utility provider install piping and appurtenances up to the load side of the meter. Gas meters installed by North Shore Gas shall be equipped with second pulse outputs.

D209005 COMPRESSED AIR SYSTEM (NON-BREATHING)

Provide air compressor, refrigerated air dryer, and receiver for the High Voltage Shop Workshop, sizes and psi shall be comparable if not greater than existing shops. Provide piping and compressed air drops with quick disconnects throughout the High Voltage Shop Workshop to allow connection of equipment such as pneumatic tools and air guns.

Cap the air lines from B11 in the B12 pump room. Tie the new compressor into the air lines that currently run to B12A.

--End of Section--

6. ENGINEERING SYSTEMS REQUIREMENTS

D30 HVAC

Refer to Part 4 Section D30 for performance requirements of the building elements included in the HVAC system.

SYSTEM DESCRIPTION

Provide heating, ventilating and air conditioning for the portion of B-11 that remains that attains the following objectives: Occupant comfort, Indoor air quality, Acceptable noise levels, Energy efficiency, Reliable operation, and Ease of maintenance. Design and installation shall be in accordance with IMC, UFC 3-401-01, Mechanical Engineering, and UFC 3-410-01, Heating, Ventilating, and Air Conditioning Systems.

GENERAL SYSTEM REQUIREMENTS

Provide working space around all equipment. Provide all required fittings, connections and accessories required for a complete and usable system. All equipment shall be installed per the criteria in PTS Section D30 and the manufacturer's recommendations. Where the word "should" is used in manufacturer’s instructions, substitute the word "shall".

Provide air conditioning and heating for spaces as indicated and for the following Design conditions:

Inside Conditions

Summer	75	Degrees F dry bulb	Winter	68	Degrees F
	23.8	Degrees C dry bulb		20	Degrees C
	50	%RH			
Ventilation	80	Degrees F dry bulb			
Heating Only				55	Degrees F dry bulb

Outdoor Design Conditions

Summer	92	Degrees F dry bulb @ MCWB Deg F and Humidity	Winter	-5	Degrees F

		Ratio @ 82 deg F DB			
	33.3	Degrees C dry bulb		-21	Degrees C

Provide Ventilation rates and systems per the latest edition of ASHRAE Standard 62.1, *Ventilation for Acceptable Indoor Air Quality*.

Zone the HVAC system as follows:

Each unit heater shall have separator controls.
Ventilation system shall be a separate zone.

Provide minimum 100mm (4”) thick concrete housekeeping pads and vibration isolators under all floor-mounted equipment.

All mechanical equipment shall have painted finishes that pass a salt-spray test conducted per ASTM B117 for duration of at least 500 hours.

D3010 ENERGY SUPPLY

D301002 GAS SUPPLY SYSTEM

Obtain natural gas pressures from the local natural gas utility provider, North Shore Gas. Contractor is responsible for providing any applications and permits and shall provide the complete natural gas system from the load side of the utility meter to the heating equipment. The Contractor shall have the local natural gas utility provider install piping and appurtenances up to the load side of the meter.

D3020 HEAT GENERATING SYSTEMS

The heating load for the office space in Area 5 of Building B11 shall be served by hot water boilers installed in Building B-12.

D302003 FUEL-FIRED UNIT HEATERS

Provide gas-fired unit heaters to serve the new warehouse space created by removal of mechanical equipment.

D302005 EQUIPMENT THERMAL INSULATION

Provide insulation for steam system equipment, steam to hot water converters, hot water pumps and other associated heating equipment.

D3030 COOLING GENERATING SYSTEMS

D303002 DIRECT EXPANSION SYSTEMS

Provide a direct expansion cooling split air handling systems with gas heating for the 1st floor nonwarehouse areas. The existing ductless split systems for the 2nd floor area are to remain.

D3040 DISTRIBUTION SYSTEMS

D304001 AIR DISTRIBUTION, HEATING & COOLING

Provide insulated, galvanized steel ductwork constructed, braced, reinforced, installed, supported, and sealed per the IMC and SMACNA standards.

Provide aluminum grilles, registers, and diffusers.

D304003 HOT WATER DISTRIBUTION SYSTEMS

Provide a variable speed pumping system to serve the HVAC hot water equipment throughout the facility. Provide insulated copper hot water supply and return piping to serve the HVAC equipment throughout the facility.

Provide air control and chemical treatment equipment for hot water piping system.

Provide an expansion tank for the hot water piping system.

Provide system flushing and start-up for the hot water piping system.

D304007 EXHAUST SYSTEMS

Provide ductwork constructed, braced, reinforced, installed, supported, and sealed per the IMC and SMACNA standards.

Provide ducted exhaust ventilation systems and exhaust fans to serve all ventilated zones of the facility. Provide in-line or rooftop centrifugal exhaust fans.

Provide ceiling mounted propeller air de-stratification fans with variable speed controllers in the new warehouse area.

D304090 OTHER DISTRIBUTION SYSTEMS

Provide base mounted circulating pumps with variable frequency drives.

D3050 TERMINAL & PACKAGE UNITS

D305002 UNIT HEATERS

Provide gas-fired unit heaters to serve the heating requirements of this facility except the office area.

D305003 FAN COIL UNITS

Provide direct expansion cooling/gas heating vertical type fan coil units and controls to serve the heating and cooling requirements of the 1st floor High Voltage Shop area. One vertical fan coil unit shall be provided for each zone and shall be located within a mechanical closet. The mechanical

closet shall be lockable and allow adequate space for maintenance. If space does not allow for vertical fan coil units, provide horizontal fan coil units in the overhead with a means for removal and maintenance of the units through lockable access panels. Provide auxiliary drain pans below valves and appurtenances to prevent piping leaks and condensate forming on chilled water piping from damaging ceilings.

D3060 CONTROLS AND INSTRUMENTATION

D306001 HVAC CONTROLS

HVAC controls shall be connected to building 11 DDC main panel for monitoring.

D306001 1.1 ELECTRONIC CONTROLS

Provide electronic controls for the HVAC systems and equipment.

D3070 SYSTEMS TESTING AND BALANCING

Provide complete Testing and Balancing (TAB) of all air and water distribution systems and HVAC equipment.

D307003 HVAC COMMISSIONING

Refer to RFP Part 3 - Project Program, Chapter 2 for Building Commissioning requirements. Mechanical systems to be commissioned, if provided, include HVAC systems and controls, refrigeration systems and controls, renewable energy systems and domestic hot water systems.

D3090 OTHER HVAC SYSTEMS AND EQUIPMENT

D309001 GENERAL CONSTRUCTION ITEMS

Comply with the Force Protection Criteria.

-- End of Section --

6. ENGINEERING SYSTEMS REQUIREMENTS

D40 FIRE PROTECTION

Refer to Part 4 Section D40 for performance requirements of the building elements included in the fire protection systems.

SYSTEM DESCRIPTION

Modify the existing fire alarm system in the project area in accordance with applicable codes and standards.

GENERAL SYSTEM REQUIREMENTS

Provide working space around all equipment. Provide all required fittings, connections and accessories required for a complete and usable system. All equipment shall be installed per the criteria of PTS section D40 and the manufacturer’s recommendations. Where the word "should" is used in the manufacturer's recommendations, substitute the word "shall".

All fire protection and life safety related Design Documents developed for this project, including but not limited to, specifications, installation drawings, shop drawings or working plans, calculations, other required pre-construction documentation and as-built drawings shall be prepared by, or under the direct supervision of the Design-Build Contractor’s Qualified Fire Protection Engineer, the Fire Protection Designer of Record (FPDOR), as specified herein. The Qualified Fire Protection Engineer shall be a registered professional engineer (P.E.) who has passed the fire protection engineering written examination administered by the National Council of Examiners for Engineering and Surveys (NCEES).

The contractor shall be responsible for verifying and ensuring existing fire protection systems throughout the project area comply with applicable codes and standards.

D4010 FIRE ALARM AND DETECTION SYSTEMS

Demolish fire alarm system components contained within demolished portions of B-11 and B-811. Reprogram and modify wiring as necessary for existing equipment to remain in B-11, B-12, and B-12A. The fire alarm system shall comply with all applicable criteria including UFC 3-600-10N and NFPA 72.

Ensure manual pull stations are installed at all exit doors from B-11 at the completion of demolition and reconstruction. Add new notification appliances as necessary to replace appliances that are demolished or relocated during demolition and reconstruction activities. The existing fire alarm control panel shall be used to control all new and existing notification appliances, manual pull stations, and detection devices. Therefore, the new devices shall match the existing devices for consistency and compatibility with the existing Simplex 4020 fire alarm control panel. The contractor shall be responsible for verifying that the existing fire alarm control panel is capable of supplying power to these devices; if the existing fire alarm control panel is not capable of supplying power to these devices, the contractor will be responsible for providing additional power supplies. Match existing wiring classes for all new equipment to be installed.

Manual pull stations shall be semi-flush or surface mounted.

After demolition is complete and in lieu of replacing pull stations and adding new notification devices, provide modification to the Simplex 4020 panel, located in the Administrative Office of Building 12.

Provide new circuits and conduit, or use existing circuits (based on existing circuit analysis done by the Contractor and capacity) and provide new devices, new conduit, wire, and junction boxes to the new device location. All new breaks in circuits for the purpose of this modification shall be reconnected using terminal blocks permanently mounted in the box. T-tapping will not be allowed for this system modification. The modified fire alarm, system shall be capable of notifying building occupants inside the entire facility. The end result shall be a complete, electrically supervised, addressable intelligent, manual and automatic, annunciated fire alarm system throughout the facility as required by code. The system shall follow the characteristics of the existing system, utilizing similar make and manufacturer horn/strobes and pull stations as necessary to meet the appropriate Navy or NFPA codes and standards. These integrated systems shall be capable of notifying building occupants by means of tones and strobes installed according to code,. The fire alarm system reporting portion of the system shall remain as configured with the existing base fire reporting system. New zones in the transmitter shall be utilized for fire pump running (alarm), phase reversal (trouble), and fire pump failure (trouble). The fire alarm system shall include manual stations where necessary, audio/visual alarms, electrical supervision of all sprinkler system alarm and supervisory devices, and electrical supervision of fire pump controllers.

The fire alarm circuits and wiring shall match the existing circuit configuration. All new devices shall be surface mounted.

D4020 FIRE SUPPRESSION WATER SUPPLY AND EQUIPMENT

Base hydraulic calculations on a static pressure of TBD.

The incoming sprinkler service shall be provided with a reduced pressure principle backflow preventer.

Provide horizontal split-case centrifugal], electric driven fire pump. The minimum rated capacity shall be TBD.

Provide a 2-hour fire rated enclosure of the fire pump and controllers.

D4030 STANDPIPE SYSTEMS

Provide a Class I standpipe system.

The building standpipe system and sprinkler system shall be fed from the same supply as a combined system. Residual pressure requirements specified in NFPA 14 must be supplied by a fire pump.

D4040 SPRINKLER SYSTEMS

Prior to commencing the sprinkler system design, submit a structural analysis prepared by a licensed structural engineer, to determine if the current roof/ceiling structure is capable of supporting the additional load of a sprinkler system.

Provide wet and dry pipe automatic sprinkler protection to provide complete coverage throughout.

For light, ordinary, or extra hazard areas, the sprinkler rate of application shall be according to UFC 3-600-01Provide sprinklers with ordinary temperature rating in appropriate areas and areas with finished ceilings. Provide brass sprinklers in the areas where these sprinklers.

Provide corrosion resistant sprinklers where necessary.

D4090 OTHER FIRE PROTECTION SYSTEMS

Provide fire stopping as necessary at all penetrated fire walls.

--End of Section--

6. ENGINEERING SYSTEMS REQUIREMENTS

D50 ELECTRICAL

SYSTEM DESCRIPTION

Demolish the existing.electrical systems of Building B11 as shown on the plans. This shall include all equipment in the 1951 Boiler #4 addition, (Area 3), the 1965 Boiler #5 and #6 Addition, (Area 2), and the 1985 B811 Addition, (Area 1). Major electrical equipment in this area includes SWBD001, MCC-1, MCC-5, the 480V switchhouse, and boilers #5 and #6. All lighting in these areas shall be removed and lamps and ballasts containing mercury or PCB's shall be disposed of as outlined in Section 02 84 16 Handling of Lighting Ballasts and Lamps Containing PCBs and Mercury.

In addition to the complete demolition of Areas 1, 2 and 3, as outlined above, the following equipment located in the 1906 original construction, (Area 5), and the 1930's gas turbine room, (Area 4), shall be demolished:

1. SWBD003, MCC-7 and MCC-8 in Area 4.
2. Gas Turbine Generators #1 and #2 in Area 4.
3. Steam Turbine Generators #1 and #2 in Area 5.
4. Diesel Generator A in Area 5.
5. 2.4kV switchgear in Area 5.

SWBD002, located in the basement of Area 5, feeds existing loads in Areas 4 and 5 as well as loads in Water Treatment Bldg B-12. This switchboard will remain, and is currently fed from transformer T11-12. T110-12 is powered from switch M61S2 near B10.

Storage Bldg B-811A, a storage building located west of B-811 will remain. Provide access to and allow use of this building throughout construction.

Miscellaneous other structures located on the site will be demolished. Power to these locations shall be disconnected and all loads shall be de-energized prior to demolition. All lighting in these areas shall be removed and lamps and ballasts containing mercury or PCB's shall be disposed of as outlined in the specifications. These areas include:

1. B-811
2. B-11B
3. 480V Square D Switchhouse
4. Ash Silo
5. B-135 (ammonia building)
6. Fuel Oil Storage Tank B-11E
7. Fuel Oil Transfer Bldg B-11G

Equipment in the M6 Substation, located west of B-12 and at the top of the bluff, that is part of the 2.4kV power system will be demolished. See drawing ED105 for details.

One satellite steam plant (Building 3000), located remotely from B-11 will be demolished. Electrical service at this location shall be disconnected and removed back to the utility pole feeding the plant. All loads shall be de-energized prior to demolition. All lighting in this area shall be removed and lamps and ballasts containing mercury or PCB's shall be disposed of as outlined in the specifications.

480V-120/208V Transformer TX-19 is rated 45KVA and provides power to LP-19. TX-19 and LP-19

are located in area 4 and shall remain in service. The existing feeder to TX-19 is from SWBD003 and will be removed. A new feeder is shown on the drawings from SWBD002 for TX-19.

480V generator control power for the Diesel Generators DG2 and DG3, located outside and north of B11, is currently supplied from SWBD001. These feeders will be removed. Provide new feeders from Panelboard OP next to T811A.

Three 240V street and flood lighting circuits are currently fed from panel LP-21 in Fuel Oil Transfer Bldg B-11G. These circuits feed existing street lighting along Ziegemier St north of the site as well as flood lighting in the storage areas north of existing Fuel Oil Tank 11E. These lights shall remain in service. Lighting is shown on the drawings as being re-fed from a new panelboard installed in B-811A.

The electrical repair work includes the design, upgrade and installation of interior electrical distribution systems in 1st Deck (High Voltage Shop), and 2nd deck conference room as required at Building 11. Provide a complete function analysis for each new room in 1st Deck, High Voltage Shop and provide necessary upgrades to bring the building up to new loading capacity and to user's requirements.

The upgraded electrical system in 1st Deck, High Voltage Shop, for each area of work shall be designed after a thorough site investigation and meeting with the base utilities users, and shall be in accordance with the most recent editions of the following:

- NFPA-70 National Electrical Code

- ANSIC2, National Electrical Safety Code

- IEEE, ANSI, NEMA, and UL Standards

- IES, Lighting Reference Guide and Application Guide

- UFC 3-501-01, Electrical Engineering

- UFC 3-520-01, Design: Interior Electrical Systems

- UFC 3-530-01, Design: Interior and Exterior Lighting and Controls

- Design and Construction Requirements – Energy Policy Act 2005

The scope of the electrical project is to add interior electrical and lighting systems in the new renovated 1st Deck, High Voltage Shop at Building 11. Provide additional electrical power and lighting systems consisting of panelboard(s), circuit breakers, conduits, feeder and branch wiring, area lighting fixtures, emergency lights and exit signs, switches, receptacles outlets and grounding including all accessories and other devices or equipment as necessary that are required for a complete and usable system. All electrical services and wiring shall be complete in place, tested and approved, as specified throughout this RFP, as needed for complete, usable and proper installation. All equipment and devices shall be installed per the criteria of RFP section D50 and per manufacturer's recommendations. Where the word "should" is used in the manufacturer's recommendations, substitute the word "shall".

The interior distribution system shall consist of insulated conductor in conduit.

GENERAL SYSTEM REQUIREMENTS

Provide an Electrical System complete in place, tested and approved, as specified throughout this RFP, as needed for a complete, usable and proper installation. All equipment shall be installed per the criteria of PTS Section D50 and the manufacturer's recommendations. Where the word "should" is used in the manufacturer's recommendations, substitute the word "shall".

Upgrade the electrical power and lighting fixtures complete in place, tested and approved, as specified throughout this RFP, as needed for a complete, usable and proper installation. All equipment shall be installed per the criteria of Section D50 and the manufacturer's recommendations.

D501001 MAIN TRANSFORMERS

Main transformer(s) are defined in Section G40, *Site Electrical Utilities*.

D501004 PANELBOARDS

Branch circuit panels will be installed to serve all the additional loads as required for new warehouse and High Voltage Shops. Panelboard shall have copper bus.

Panelboard shall have a minimum of 10% space and 10% spare breakers for future use. Panels not in sight of the feeder over current protection shall have a main circuit breaker. Panels shall have hinged front cover with lock.

Panelboard shall have bolt-on type circuit breakers to serve the electrical loads.

Provide new panel directories.

D501005 ENCLOSED CIRCUIT BREAKERS

Provide enclosed circuit breakers, bolt-on type as required.

D501006 MOTOR CONTROL CENTERS

No motor control centers work anticipated for this project.

D501090 OTHER SERVICE AND DISTRIBUTION

Provide other electrical service and distribution as required.

D5020 LIGHTING AND BRANCH WIRING

Provide lighting and general-purpose receptacle throughout all spaces as required. All general receptacles shall be 20amps. NEMA WD 1. Receptacles for general purpose shall be circuited such that no more than six duplex (or three quad duplex) receptacles are placed on the one 20 amp, singlepole breaker. Provide dedicated receptacles for all ancillary office equipment such as faxes, printers, plotters, shredders, or copiers. This equipment shall be circuited such that no more than one duplex receptacles is place in one 20 amp, single pole breaker. A dedicated circuit shall also be required for refrigerators, water coolers, microwaves, and bending machines. Each receptacle homerun shall have a dedicated neutral, multi-wire branch circuits (shared neutral) shall not be used.

Add general purpose receptacles, cover plates and wiring in all renovated area in the 1st Deck, High Voltage Shop, at Building 11 as required and in accordance with latest edition of National Electrical Code (NEC).

Provide receptacles and/or hardwired power connections as required for any special equipment or furnishing.

D502001 BRANCH WIRING

Branch wiring shall be per UFC 3-520-01. At a minimum, provide conductors with type THHN/THWN insulation for conductor sizes #12 through #1/0, and type XHHW insulation for conductor sizes #2/0 and larger. All conductors shall be copper and shall be routed in EMT conduit. All conductor sizes shall be #12 minimum.

Add general purpose receptacles, cover plates and wiring in all renovated area in the 1st Deck , High Voltage Shop, at Building 11 as required and in accordance with latest edition of National Electrical Code (NEC).

All general purpose receptacles shall be 20 amps. NEMA WD 1.

1st Deck, High Voltage Shop

- Locker Rooms/Restrooms

Provide branch wiring and GFI receptacle outlets. Provide hand dryer connections as required per code.

- Break room

Provide dedicated circuits for GFI receptacle outlets with cover plate for electric range, microwave, coffee maker and refrigerator. Provide a telephone jack, conduit and wiring at this location.

- Office

Provide wiring adequate receptacle outlets for micro fridge, microwave, and computers. Provide (2) NMCI jacks, a SCADA jack, and (3) Phone jacks required in the offices.

Provide power for Time Clock.

- Workshop

Provide branch wiring and other connections for air compressor, Ice machine and other equipment required power.

- Secured Storage

Provide receptacle outlets and wiring in the Storage Room as required.

2nd and 3rd Decks (As Required)

Provide new branch wiring and upgrade all receptacles and circuit breakers as required to have a fully functioning building.

Provide new wiring for the new lighting system if required in conference room on 2nd deck.

D502002 LIGHTING EQUIPMENT

In the renovated area in the 1st Deck, High Voltage Shop, and (2nd, and 3rd decks as required), provide/ upgrade lighting fixtures, emergency light fixtures, switches, LED exit light fixtures, and emergency egress lighting (either integral to the fixture or stand-alone emergency packs). Refer to part D509002 for detailed emergency lighting requirements. Building lighting shall consist of fluorescent,

incandescent including light switches. All lighting control design, fixture layout, luminaire wattage requirements, lighting power allowance, etc. shall be in compliance with ASHRAE 90.1.

Lighting methods and foot-candle levels shall be in accordance with the Illuminating Engineering Society of North America (IESNA) or applicable UFC. Design to highest recommended foot candle level. Illumination shall meet the requirements of the visual tasks being performed. General illumination requirements shall be determined in a plane of 30 inches above the floor.

Fluorescent light fixtures shall utilize T5 and /or T8 lamps and electronic energy efficient, high frequency electronic ballasts. Design shall employ multi-lamp standard ballasts with total harmonic distortion less than 20 percent.

Automatic shut-off systems or occupancy sensors shall be used to help reduce energy costs. Dimming ballasts, multi-level switching, and daylight sensors shall also be considered. At a minimum, occupancy sensors shall be installed in restrooms and other rooms.

Contractor shall coordinate all possible light fixture types and layout designs along with any control design requirements with the user and applicable design guides.

1st Deck, High Voltage Shop

- Locker Rooms/Restrooms

Provide new light fixtures in new Locker rooms/Restrooms with gasket to prevent moisture from entering the fixture housing. Light fixtures in shower rooms shall be protected by GFCI circuit breakers. Upgrade lighting system by providing additional light fixtures in the room as needed by code.

- Break Room

Provide new lighting system in the Break Room as required by code.

- Office

Provide new lighting system in the Office as required by code.

- Workshop

Upgrade the lighting system in the Workshop by providing additional light fixtures as required by code. 115v receptacles must be provided in warehousing area along with new lighting.

- **Secured Storage Room**

Provide new lighting system in the Storage room as required by code.

2nd and 3rd Deck (As Required)

Provide new light fixtures, light switches with cover plates as required.

Provide/upgrade emergency light fixtures, and exits signs in the 1st deck (High Voltage Shop), 2nd and 3rd Deck of Building 11.

D5030 COMMUNICATIONS AND SECURITY

D503001 TELECOMMUNICATIONS SYSTEMS

The existing facility Phone and Data systems shall be upgraded for the renovation of the 1st Deck, High Voltage Shop, and (2nd and 3rd Decks as required) of Building 11 as required.

D503002 PUBLIC ADDRESS SYSTEMS

No public address systems work are anticipated for this project.

D503003 INTERCOMMUNICATIONS SYSTEMS

No intercommunications systems work is anticipated for this project.

D503004 TELEVISION SYSTEMS

No television systems work is anticipated for this project.

D503005 SECURITY SYSTEMS

No security systems work is anticipated for this project.

D503090 OTHER COMMUNICATIONS AND ALARM SYSTEMS

No other communications and alarm systems work is anticipated for this project.

D509001 GENERAL CONSTRUCTION ITEMS (ELECTRICAL)

Provide General Construction Items (Electrical) including, but not necessarily limited to, all connections, fittings, boxes and associated equipment needed by this and other sections of this RFP as required for a complete and usable system.

Conduits, cable trays and busways that penetrate fire-rated walls, fire-rated partitions, or fire-rated floors shall be firestopped.

D509002 EMERGENCY LIGHTING AND POWER

Upgrade emergency lights and exit signs to meet NFPA 101 requirements.

Provide/Upgrade emergency lighting in corridors, heads and interior rooms that do not have exposure to natural light. Emergency lighting shall be AC powered, battery backup with inverter units within the general lighting fixtures and arranged to illuminate automatically upon loss of power. Exit signs will be AC powered with battery backup, L.E.D. lamp type color shall be red. Replace security light fixtures as required.

D509003 GROUNDING SYSTEMS

Provide complete equipment grounding system check.

D509004 LIGHTNING PROTECTION

No lightning protection work is anticipated for this project.

D509005 ELECTRIC HEATING

No electric heating work is anticipated for this project.

D509006 ENERGY MANAGEMENT CONTROL SYSTEM

No energy management control system work is anticipated for this project.

D509090 OTHER SPECIAL SYSTEMS AND DEVICES

Provide wiring and other connections for all HVAC and other electrical systems as required.

Electrical & Lighting Notes:

1. All electrical and lighting circuits which are to remain but where disturbed during demolition and/or installation shall have circuits wiring and power restored back to original condition.

2. Provide and maintain the proper lighting illumination in foot candles per Illuminating Engineering Society.

3. All demolition, installation, workmanship and all equipment and devices shall be in accordance with applicable requirements of the latest edition of National Electrical Code.

4. Perform a complete electrical connection test of all wiring and verify that no short circuit or accidental grounding exists. Provide a complete test to determine the proper operation of the entire system.

--End of Section--

6. ENGINEERING SYSTEMS REQUIREMENTS

F20 SELECTIVE BUILDING DEMOLITION

GENERAL SYSTEMS REQUIREMENTS

Perform all off-site work necessary to meet the requirements of the project, local codes, reference standards, technical specifications and performance criteria.

Identify and obtain all permits to comply with all federal, state, and local regulatory requirements associated with this work. The contractor shall submit complete the "Permits Record of Decision" (PROD) form with the first design submittal package. A blank PROD form is in the UFC 3-201-01, *Civil Engineering*. Contractor shall determine correct permit fees and pay said fees. Copies of all permits, permit applications, and the completed PROD form shall be forwarded to the EFD Environmental Reviewer.

Coordinate and obtain approval from the Contracting Officer for proposed haul route(s), work site access point(s), employee parking location(s) and material laydown and storage area(s).

F2010 BUILDING ELEMENTS DEMOLITION

This project includes the demolition of the following: Areas 2 and 3 of B-11, B-811, B-3000, B-909, and B-1709.

F2010 1.1 GENERAL DEMOLITION

Refer to part 6 and other parts of this RFP for demolition scope.

F2010 1.2 UTILITIES

Exterior utilities for B-3000 and portions of B-11 and adjacent structures civil/mechanical utility lines shall be plugged/capped at system main line or where indicated and lines abandoned/removed to demolished structure. See drawings for more detailed information. Electrical demolition to include removal of wiring/electrical cable back to source transformer. See electrical section for more detailed information.

F2010 1.3 DUST CONTROL

Prevent the spread of dust and debris to occupied portions of the building and avoid the creation of a nuisance or hazard in the surrounding area.

F2010 1.4 TRAFFIC CONTROL

Where pedestrian or vehicle is endangered, use traffic barricades.

F2010 1.5 WEATHER PROTECTION

Weather protection shall be required for remain areas of B-11 after demolition of areas 2 and 3 described in other parts of this RFP.

F2010 1.6 BURNING

Burning will not be permitted.

F201001 SUBSTRUCTURE & SUPERSTRUCTURE

Refer to part 6 and other parts of this RFP for substructure or superstructure to be demolished.

F201002 EXTERIOR CLOSURE

Refer to part 6 and other parts of this RFP for the exterior closure.

F201003 ROOFING

Refer to part 6 and other parts of this RFP for roofing to be demolished.

F201004 INTERIOR CONSTRUCTION & FINISHES

Refer to part 6 and other parts of this RFP for interior construction & finishes to be demolished.

F201005 CONVEYING SYSTEMS

Refer to part 6 and other parts of this RFP for conveying systems to be demolished.

F201006 MECHANICAL SYSTEMS

Refer to part 6 and other parts of this RFP for mechanical systems to be demolished.

F201007 ELECTRICAL SYSTEMS

Refer to part 6 of this RFP for electrical systems to be demolished.

F201008 EQUIPMENT & FURNISHINGS

Refer to part 6 and other parts of this RFP for special equipment and furnishing to be demolished.

F201090 OTHER NON-HAZARDOUS SELECTIVE BUILDING DEMOLITION

Refer to part 6 and other parts of this RFP for non-hazardous selective building demolition.

F2020 HAZARDOUS COMPONENT ABATEMENT

A report for each of the following: asbestos, lead based paint, paint: lead, mercury and low level radioactive components are provided to support this project and is attached in Part 6 of this RFP.

A report for each of the following: PCBs and ozone depleting substances is not provided to support this project.

F2020 1.1 PRIVATE QUALIFIED PERSON (PQP)

The General Contractor is required to hire as a first tier subcontractor a PQP to ensure compliance with the approved work plans and perform independent inspections, testing and verification of the hazardous components work including: asbestos, lead containing paint, mercury & LLR components, and PCBs.

F2020 1.2 FURNISHINGS

F2020 1.3 ASBESTOS

Remove or dispose of material into a permitted landfill in compliance with regulations.

F2020 1.4 LEAD BASED PAINT

The work includes removal of lead-based paints. For more detailed information regarding concentrations and locations of lead based paint, see the lead-based paint report in Part 6 of the RFP.

F2020 1.5 PAINT RELATED WORK

The work will require disturbance of paint containing lead. Paint related work includes: removal. For more detailed information regarding concentrations and locations of existing paints, see the lead-based paint report in Part 6 of the RFP.

F2020 1.6 MERCURY & LLR COMPONENTS

Remove all: fluorescent light tubes, thermostats and switches, smoke detectors, exit signs, as mercury vapor containing and LLR components.

F2020 1.7 PCBs

Remove all: light ballasts, transformers, capacitors, heat transfer fluids associated with mechanical equipment in buildings being demolished, lubricants associated with equipment in buildings being demolished, compressors oil associated with equipment in buildings being demolished, without markings regarding PCB content ("NO PCB", "NON PCB") as PCB containing.

F2020 1.8 OZONE DEPLETING SUBSTANCES (ODS)

Remove the following equipment which contains ODS: air conditioning equipment, fire suppression system cylinders and canisters

F2020 1.9 ANIMAL DROPPINGS

F2020 1.10 MOLDS AND SPORES

F2020 1.11 DISPOSAL

All waste materials shall become the property of the Contractor and shall be transported, disposed of and recycled in accordance with state regulations and UFC 1-900-01.

F202001 SUBSTRUCTURE & SUPERSTRUCTURE

Refer to part 6 of this RFP for substructure or superstructure to be abated, decontaminated, or removed.

F202002 EXTERIOR CLOSURE

Exterior closure is required to after demolition of areas 2 and 3 is complete. Refer to other parts of this RFP for details on the exterior closure of B-11.

F202003 ROOFING

Refer to part 6 of this RFP for roofing materials to be abated.

F202004 INTERIOR CONSTRUCTION & FINISHES

Refer to part 6 of this RFP for interior finishes to be abated.

F202005 CONVEYING SYSTEMS

Refer to part 6 of this RFP for conveying systems to be abated.

F202006 MECHANICAL SYSTEMS

Refer to part 6 of this RFP for mechanical systems to be abated.

F202007 ELECTRICAL SYSTEMS

Refer to part 6 of this RFP for electrical systems to be abated.

F202008 EQUIPMENT & FURNISHINGS

Refer to part 6 of this RFP for equipment & furnishings to be abated.

F202090 OTHER HAZARDOUS SELECTIVE BUILDING DEMOLITION

Refer to part 6 of this RFP for building components to be abated.

--End of Section--

6. ENGINEERING SYSTEMS REQUIREMENTS

G10 SITE PREPARATION

SYSTEM DESCRIPTION

The site preparation system consists of site clearing, demolition, salvage, relocation, and earthwork necessary to ready the site for other work associated with the project.

GENERAL SYSTEM REQUIREMENTS

Develop the project site and perform all off-site work necessary to meet the requirements of the project, local codes, reference standards, technical specifications and performance criteria.

Previous site plans of the existing site are being provided to the contractor in lieu of a topographic survey. Prior to starting work, physically verify the location of all existing utilities and obtain all additional survey data required to provide a quality final design. The existence, size and/or location of the utilities are not guaranteed by the drawings provided. The Contractor shall verify the location of all utilities prior to construction.

Minimize the impact of construction activity on operations and neighboring facilities.

Identify and obtain all permits to comply with all federal, state, and local regulatory requirements associated with this work. The contractor shall submit a complete "Permits Record of Decision" (PROD) form with the first design submittal package. A blank PROD form can be obtained at the Download Tab of Part 6 of the NAVFAC Design-Build website at the following link http://www.wbdg.org/ndbm/Download/Down_Additional.html?Section=AdditionalInfo . Contractor shall determine correct permit fees and pay said fees. Copies of all permits, permit applications, and the completed PROD form shall be forwarded to the Government's Civil Reviewer and Environmental Reviewer.

Coordinate and obtain the Resident Officer In Charge of Construction's (ROICC) approval for proposed haul route(s), work site access point(s), employee parking location(s) and material laydown and storage area(s).

Refer to Site Analysis and Building Requirements Sections for additional site preparation functional program information.

Personnel under the supervision of a registered Professional Engineer shall provide inspection of excavations and soil/groundwater conditions throughout construction. The Engineer shall be responsible for performing pre-construction and periodic site visits throughout construction to assess site conditions. The Engineer, with the concurrence of the Contractor and the Contracting Officer, shall update the excavation, sheeting, shoring and dewatering plans as construction progresses to reflect actual site conditions and shall submit the updated plan and a written report (with professional stamp) at least monthly informing the Contractor and Contracting Officer of the status of the plan and an accounting of Contractor adherence to the plan; specifically addressing any present or potential problems. The Engineer shall be available to meet with the Contracting Officer at any time throughout the contract duration. The Contractor shall bear all costs of the Engineer.

G1010 SITE CLEARING

G101001 CLEARING

The project site does not have saleable timber.

Burning will not be allowed.

G101002 DEBRIS DISPOSAL

All grubbing and clearing residue, demolished material, rubbish and debris generated by this project shall be hauled off-site and off station by the Contractor.

The following methods of soil stabilization will not be allowed: lime, cement, lime slurry, asphalt, and pressure grouting.

G1020 SITE DEMOLITION & RELOCATIONS

The items to be salvaged are described in Part 6.

G102001 BUILDING MASS DEMOLITION

Demolish the existing Building B11 areas as designated on the drawings. Refer to Section F2020, "Hazardous Component Abatement" for requirements regarding removal of hazardous components.

Preserve the following building elements: Areas 4 and 5 of Building B11.

G102002 ABOVEGROUND SITE DEMOLITION

G102002 1.1 ABOVEGROUND STORAGE TANKS (AST)

There is non-friable ACM caulk at the base of the AST. Paint encasing the AST is not lead-based paint (LBP). Testing on the soil adjacent to the AST revealed no exceedance of construction worker IEPA exposure level regulatory guidelines. An aboveground storage tank report for Tank 11E is provided in part 6 for additional information.

Prior to starting work, conduct any additional testing that may be needed to provide a final design and comply with all applicable federal, regional, state and local regulations. Refer to 3-800-10N, Environmental Engineering for Facility Construction, for additional requirements and criteria.

Owner will clean tank and lines of 11E AST prior to contractor demolition.

G102002 1.2 ABOVEGROUND PIPING

All aboveground piping shall be removed. Supporting steel and concrete structures shall also be removed. Refer to chapter 3 and Part 6 for additional information.

G102003 UNDERGROUND SITE DEMOLITION

Preserve the following underground site elements: all existing utilities required for support of remaining components of Buildings B11 and B12.

Abandonment of utility systems shall be done in a manner that conforms to applicable codes and regulations, removes their presence from the ground surface and clearly indicates that they have been abandoned. Utilities shall not be abandoned in place underneath or within 10 feet (3.0 m) of any new facilities. Remove and relocate existing utility piping, conduits, and utility structures under the proposed building modifications.

All conduits to be abandoned shall have wiring removed.

All piping to be abandoned shall be abandoned in place with a minimum 24 inches (600 mm) length plugged with grout. Piping shall be filled with flowable fill under pavements subject to potential vehicle loadings.

Remove existing utility structures to 3 feet (900 mm) below existing or new adjacent grade, whichever is greater. Break up bases to permit drainage. Fill with clean sand.

G102004 BUILDING RELOCATION

Relocate building elements as indicated on the drawings in another part of this RFP.

G102005 UTILITY RELOCATION

Comply with the requirements of the utility provider concerning the utility relocation: natural gas.

G102006 FENCING RELOCATION

There are fencing relocations or modifications included in another part of this RFP.

G102007 SITE CLEANUP

G102090 OTHER SITE DEMOLITION & RELOCATIONS

G1030 SITE EARTHWORK

G103002 COMMON EXCAVATION

G103003 ROCK EXCAVATION

Blasting will not be permitted.

G103004 FILL & BORROW

Borrow and select fill shall come from off-base sources.

G103005 COMPACTION

G103006 SOIL STABILIZATION

G103007 SLOPE STABILIZATION

Provide slope stabilization to work area of trestle S-4 through appropriate grading and other protective measures. See drawing U-001 for additional information.

G103008 SOIL TREATMENT

G103009 SHORING

G103010 TEMPORARY DEWATERING

G103011 TEMPORARY EROSION & SEDIMENT CONTROL

G103090 OTHER SITE EARTHWORK

G1040 HAZARDOUS WASTE REMEDIATION

A partial soil/groundwater report is provided in Part 6. No hazardous concentrations of contaminants were identified in the soil or groundwater. Although not hazardous, worker protection may be required when contacting subsurface soil/fill.

Prior to starting work, conduct any additional testing that may be needed to provide a final design and comply with all applicable federal, regional, state and local regulations. Refer to UFC 3-800-10N, *Environmental Engineering for Facility Construction*, for additional requirements and criteria.

G1040 1.1 EXCAVATION

G1040 1.2 STOCKPILED SOILS

G1040 1.3 CLEAN FILL

Refer to Environmental Section 01 57 19.01 20B, *Soil, Fill, and Construction/Demolition Debris Removal.*

G1040 1.4 SPILLS

In the event of a spill or release of hazardous substances, pollutant, contaminant or oil, notify the Contracting Officer immediately. Containment/Control actions shall be taken immediately to minimize the effect of any spill or leak. Clean up shall be performed at the Contractor's expense in accordance with state regulations.

G1040 1.5 DISPOSAL

All waste materials shall become the property of the Contractor and shall be transported, disposed of or recycled in accordance with state regulations and UFC 1-900-01

--End of Section--

6. ENGINEERING SYSTEMS REQUIREMENTS

G20 SITE IMPROVEMENTS

SYSTEM DESCRIPTION

The site improvements system consists of pavements and pavement related features, landscaping and other exterior site development work related to this project associated with Building and Steam Pit Demolition. Pavement design shall be performed by a licensed Professional Engineer familiar with conditions local to the project site.

Site improvements are required to accommodate demolition indicated in other parts of this RFP.

GENERAL SYSTEMS REQUIREMENTS

Provide site improvements as required to make a useable facility that meets functional and operational requirements, incorporates all applicable anti-terrorism, force protection and physical security requirements and blends into the existing environment.

Provide site improvements in conformance with applicable requirements of the Uniform Federal Accessibility Standards.

Identify and obtain all permits to comply with all federal, state, and local regulatory requirements associated with this work. The contractor shall complete the "Permits Record of Decision" (PROD) form with the first design submittal package. A blank PROD form can be obtained at the Download Tab of Part 6 of the NAVFAC Design-Build website at the following link http://www.wbdg.org/ndbm/Download/Down_Additional.html?Section=AdditionalInfo . Contractor shall determine correct permit fees and pay said fees. Copies of all permits, permit applications, and the completed PROD form shall be forwarded to the Government's Civil Reviewer.

Provide improvements as required to conform to all applicable anti-terrorism and physical security requirements.

Minimize the impact of construction activity on operations and neighboring facilities.

Locate new site improvements at locations indicated on the drawings in another part of this RFP. If specific locations are not provided, site the improvements to develop appropriate and positive relationships with other facilities and to conform to existing development patterns.

Refer to Site Analysis and Building Requirements Sections for additional site improvement functional program information.

G2010 ROADWAYS

Provide roadways to match existing where demolition requires repairs to existing roadways.

G201002 CURBS & GUTTERS

Provide curb and gutter to tie into adjacent facilities.

G201004 MARKING & SIGNAGE

Provide pavement markings to match existing.

G201090 OTHER ROADWAYS

G202001 BASES & SUBBASES

Crushed concrete meeting specified gradation for aggregate base or subbase courses may not be used.

G202002 CURBS & GUTTERS

Provide curb and gutter to tie into adjacent facilities where demolition requires repairs to curbs and gutters.

G202003 PAVED SURFACES

Provide paved surfaces to match existing where demolition requires repairs to existing pedestrian paving.

G202004 MARKING & SIGNAGE

Provide pavement markings to match existing.

Provide signage to match existing.

G202005 GUARDRAILS & BARRIERS

Provide guardrails and bollards in accordance with the UFC 3-200-10N, *Civil Engineering*.

G202007 MISCELLANEOUS STRUCTURES AND EQUIPMENT

G2030 PEDESTRIAN PAVING

Provide pedestrian paving to match existing where demolition requires repairs to existing pedestrian paving.

G204001 FENCING & GATES

Provide fence to match existing fence where indicated on the drawings in another part of this RFP.

G204005 SIGNAGE

Provide signage in accordance with the Activity's BEAP and the Installation and Appearance Guide.

G2050 LANDSCAPING

Provide complete landscaping consisting of lawn, groundcover, as required to provide a quality, cost-effective, functional and visually appealing landscape program.

Guarantee all landscaping for a period of one year after final acceptance of the project.

G205001 FINE GRADING AND SOIL PREPARATION

Provide 4" of topsoil for all grass areas and other pervious areas disturbed by Contractor operations.

G205002 EROSION CONTROL MEASURES

Prevent erosion from occurring by providing erosion control measures as required by city, state and federal requirements.

G205003 TOPSOIL AND PLANTING BEDS

See G205005 Plantings.

G205004 SEEDING SPRIGGING AND SODDING

Areas indicated to be turfed in another part of this RFP shall be seeded or sodded. Provide seed and fertilize existing grass areas disturbed by Contractor operations.

G205005 PLANTINGS

Preserve existing trees to the greatest extent possible.

--End of Section--

6. ENGINEERING SYSTEMS REQUIREMENTS

G30 SITE CIVIL/MECHANICAL UTILITIES

SYSTEM DESCRIPTION

The site civil/mechanical utility systems include water supply systems, sanitary sewer systems, storm drainage systems, heating distribution systems, cooling distribution systems, fuel distribution systems and associated appurtenances which are more than 5 feet (1.5 meters) outside the building.

The site mechanical utility system consists of all piping and appurtenances for including all accessories and devices as necessary and required for a complete and usable system up to 5 feet (1.5 meters) outside buildings.

GENERAL SYSTEM REQUIREMENTS

Develop the site to provide water, fire protection, sanitary sewer, storm drainage, heating, cooling and fuel distribution services that meet the requirements of each applicable regulatory agency that governs and issues permits for the construction and operation of these systems.

Provide each system complete and ready for operation.

Physically verify the location of existing above and below ground utilities prior to starting work.

Identify and obtain all permits to comply with all federal, state, and local regulatory requirements associated with this work. The contractor shall complete the "Permits Record of Decision" (PROD) form with the first design submittal package. A blank PROD form can be obtained at the Download Tab of Part 6 of the NAVFAC Design-Build website at the following link http://www.wbdg.org/ndbm/Download/Down_Additional.html?Section=AdditionalInfo . Contractor shall determine correct permit fees and pay said fees. Copies of all permits, permit applications, and the completed PROD form shall be forwarded to the Government's Civil/Mechanical Reviewer.

Minimize the impact of construction activity on facility operations and neighboring facilities.

Utility connection points are indicated on the drawings in another part of this RFP. Obtain final approvals from the Government's Civil/Mechanical Reviewer and the Contracting Officer for all utility connection points associated with this work.

Coordinate with the local utility providers and pay any fees or charges required to connect to their utility.

Refer to Site Analysis and Building Requirements Sections for additional site civil/mechanical utilities information.

Provide all required fittings, connections and accessories required for a complete and usable system. All equipment shall be installed per the criteria of PTS Section G30 and the manufacturer's recommendations. Where the word "should" is used in the manufacturer's recommendations, substitute the word "shall".

G3010 WATER SUPPLY

G301002 POTABLE WATER DISTRIBUTION

G301003 POTABLE WATER STORAGE

G301004 FIRE PROTECTION WATER DISTRIBUTION

G301005 FIRE PROTECTION WATER STORAGE

G301006 NON-POTABLE WATER DISTRIBUTION

G301007 PUMPING STATIONS

G301008 PACKAGED WATER TREATMENT PLANTS

G301090 OTHER WATER SUPPLY

G3020 SANITARY SEWER

The new sanitary sewer system is an extension of the existing sanitary sewer collection system. The existing sanitary sewer collection system serving the project site is owned by the federal government. Provide the new sanitary sewer system and connections to the existing sanitary sewer collection system in accordance with UFC 3-201-01, *Civil Engineering*; the utility provider's requirements; and the state sewerage regulations; whichever is more stringent. Sanitary sewer system modifications are required due to the demolition of parts of B-11

Notify the utility provider of the additional wastewater flow generated by the proposed facility. Provide a copy of all correspondence with the utility provider to the Government Civil Reviewer.

Provide connection to the existing sanitary sewer collection system at the point indicated on the drawings in another part of this RFP. In identifying a suitable point of connection, provide consideration of the capacity of the existing collection system.

G302001 SANITARY SEWER PIPING

Provide exterior corrosion protection on metallic pipe lines.

G302002 SANITARY SEWER MANHOLES & CLEANOUTS

Provide precast concrete manholes only. Manhole covers provided shall have the word “SANITARY” cast into the covers.

G302090 OTHER SANITARY SEWER

G3030 STORM SEWER

The new storm sewer system is an extension of the existing storm sewer system. Storm sewer extension shall be made to prevent the accumulation of water in fuel unloading area after demolition and to accommodate B-11 demolition. The existing storm sewer system serving the project site is owned by the federal government. Provide the new storm sewer system and connections to the existing storm sewer system in accordance with UFC 3-201-01, *Civil Engineering*; the utility provider's requirements; and the state stormwater management laws and regulations; whichever is more stringent.

Provide connection to the existing storm sewer collection system at the point indicated on the drawings in another part of this RFP. Confirm that the existing outfall has adequate capacity to receive the additional stormwater flow generated by the project.

Vehicle wash areas are not to be provided.

G303001 STORM SEWER PIPING

The following materials for storm sewer piping will not be allowed: corrugated steel, corrugated aluminum, & HDPE.

G303002 STORM SEWER STRUCTURES

G303003 LIFT STATIONS

G303004 CULVERTS

G303005 HEADWALLS

G303006 EROSION & SEDIMENT CONTROL MEASURES

G303007 STORM WATER MANAGEMENT

The Contractor shall evaluate the drainage conditions and submit sealed calculations to the Government for civil and environmental review supporting EISA Section 438 and NAVY LID policies have been met in accordance with UFC 3-210-10N. Provide a narrative stating project design goals were achieved or to what extent with the sealed calculations. The NAVFAC FEC Commanding Officer shall be the final approval authority for a NAVY LID waiver requests.

The contractor shall obtain all required regulatory permits required for the proposed work. Coordinate all reports, submittals, and permit applications through the Contracting Officer.

G303090 OTHER STORM SEWER

An oil/water separator will not be required.

G3060 FUEL DISTRIBUTION

G306006 GAS DISTRIBUTION PIPING NATURAL GAS

G3090 OTHER SITE MECHANICAL UTILITIES

-- End of Section --

PART FOUR – PERFORMANCE TECHNICAL SPECIFICATIONS

Performance Technical Specs

Demolition of the Steam System

Building 11 and Site Distribution Systems
P-816
FY-15 MILCON #1111695

Naval Station Great Lakes
Great Lakes, Illinois

8 April 2015

This page intentionally left blank

TABLE OF CONTENTS

COVER PAGE.....

TABLE OF CONTENTS.....

PERFORMANCE TECHNICAL SPECIFICATIONS……

A10 FOUNDATIONS…….
B20 EXTERIOR ENCLOSURE.....
B30 ROOFING .....
B30 A FORMS – ROOFING SYSTEM COMPONENTS.....
C10 INTERIOR CONSTRUCTION……..
C30 INTERIOR FINISHES……
D20 PLUMBING…….....
D30 HVAC……
D40 FIRE PROTECTION……..
D50 ELECTRICAL…….
F20 SELECTIVE BUILDING DEMOLITION……..…….
G10 SITE PREPARATION…….....
G20 SITE IMPROVEMENTS……..
G30 SITE CIVIL / MECHANICAL UTILITIES……..……..……..

SECTION A10

FOUNDATIONS
12/13

A10 GENERAL

RFP Part 3 including the Engineering System Requirements (ESR) provide project specific requirements. The RFP Part 4, Performance Technical Sections (PTS) provide generalized technical requirements that apply to multiple facility types and include more requirements than are applicable to any one project. Therefore, only the RFP Part 4 requirements that apply to the project and further define the RFP Part 3 project specific requirements are required.

A10 1.1 DESIGN GUIDANCE

Provide the design and installation in accordance with the following references. This Performance Technical Specification (PTS) adds clarification to the fundamental requirements contained in the following Government Standards. The general requirements of this PTS section are located in PTS Section Z10, *General Performance Technical Specification*.

A10 1.1.1 Government Standards

UNIFIED FACILITIES CRITERIA (UFC)

UFC 1-200-01	General Building Requirements(A reference in this PTS section to UFC 1-200-01 requires compliance with the Tri-Service Core UFCs that are listed in UFGS Section 01 33 10.05 20, which includes the following significant UFC(s):UFC 3-101-01, Architecture UFC 3-220-01, Geotechnical Engineering UFC 3-301-01, Structural Engineering)

UNIFIED FACILITIES GUIDE SPECIFICATIONS (UFGS)

UFGS Section 31 23 00.00 20	Excavation and Fill

A10 1.2 GENERAL REQUIREMENTS

A10 1.2.1 Earthwork

The Designer of Record shall prepare the following UFGS Specification as part of the project specification and shall include the prepared specification section in the design submittal for the project:

Section 31 23 00.00 20 *Excavation and Fill*

A10 1.2.2 Geotechnical Report

See other parts of this

A10 1.2.3 Pile Driver Analyzer (PDA)

If deemed necessary by the Designer-of-Record's geotechnical engineer, the dynamic wave equation method of analysis, pile driver analyzer, shall be used to validate pile and pile hammer compatibility, establish pile driving criteria, establish terminal penetration resistance, or verify as-driven capacity of the pile. The PDA or static load test(s) shall be required for piles with required allowable design capacity equal to or greater than 40 tons.

A10 1.3 PERFORMANCE VERIFICATION AND ACCEPTANCE TESTING

Verification of satisfactory construction and system performance of the foundations shall be via Performance Verification Testing, and by field inspection, as detailed in this section of the RFP and in UFGS Section 01 45 00.05 20. Provide special tests and special inspections in accordance with UFGS Section 01 45 00.05 20, *Design and Construction Quality Control*.

A10 1.3.1 Earthwork

Perform quality assurance for earthwork in accordance with IBC Chapter 17 and UFGS Section 31 23 00.00 20. A competent person, as defined by COE EM 385-1-1, under supervision of a registered Professional Engineer is required to provide inspection of excavations and soil/groundwater conditions throughout construction. The Engineer shall be responsible for performing periodic site visits throughout construction to assess site conditions. The Engineer, with the concurrence of the contractor and the Contracting Officer, shall update the excavation, sheeting, shoring, and dewatering plans as construction progresses to reflect actual site conditions and shall submit the updated plan and a written report (with professional stamp) at least monthly informing the Contractor and the Contracting Officer of the status of the plan and an accounting of Contractor adherence to the plan; specifically addressing any present or potential problems. The Engineer shall be available to meet with the Contracting Officer at any time throughout the contract duration.

A10 1.3.2 Piles

If piles are required, perform quality assurance for pile construction in accordance with UFC 1-200-01, *General Building Requirements*. Pile installation procedures and installed piles shall be inspected and found to be in compliance with these specifications prior to acceptance of the work.

Install test piles as directed by the Contractor’s Geotechnical

Engineer. Pile load tests, if required, shall be performed in accordance with UFC 1-200-01. Test pile installation procedures shall be as directed by the Contractor's Geotechnical Engineer. Results of the pile test program and final pile installation criteria shall be submitted to the Contracting Officer prior to installation of the production piles. If deemed necessary by the Designer-of-Record's Geotechnical Engineer, the dynamic wave equation method of analysis, pile driver analyzer, shall be used to validate pile and pile hammer compatibility, establish pile driving criteria, establish terminal penetration resistance, or verify as-driven capacity of the pile. The PDA or static pile load test (ASTM D 1143) shall be required for piles with an allowable design capacity equal to or greater than 40 tons. When required, perform PDA on all indicator or test piles. Perform CAPWAP analysis on at least one test (indicator) pile to determine capacity with a minimum three day set-up and develop pile installation criteria.

A10 1.4 DESIGN SUBMITTALS

Design submittals shall be in accordance with Z10, *General Performance Technical Specifications*, UFGS section 01 33 10.05 20, *Design Submittal Procedures*, UFC 1-300-09N, *Design Procedures,* UFC 3-220-01, *Geotechnical Engineering, and UFC 1-200-01, General Building Requirements*.

UFGS sections listed below or in the body of the PTS text are to be used by the Designer of Record (DOR) as a part of the design submittal. The DOR shall edit these referenced UFGS sections and submit them as a part of the design submittal specification. Edit the specification sections in accordance with the limitations stated in PTS section Z10, *General Performance Technical Specifications*.

UFGS Section 31 23 00.00 20 *Excavation and Fill*

A10 1.5 CONSTRUCTION SUBMITTALS

Submit construction submittals in accordance with PTS Section Z10, *General Performance Technical Specifications*. In addition to the Z10 requirements, the Designer of Record (DOR) shall approve the following submittals as a minimum:

All structural elements necessary for construction

Contractor-provided geotechnical report

Controlled fill or backfill material tests

Test pile and production pile installation records

Pile load testing reports

As-Built drawings - Include a statement on the drawings indicating the method used to verify the allowable design capacity of the piles (load tests or PDA).

A1010 STANDARD FOUNDATIONS

A1010 1.1 SHEETING AND SHORING

Provide sheeting and shoring as required. Sheeting and shoring plans shall be signed by the Contractor's Geotechnical Engineer.

A1010 1.2 TERMITE CONTROL

A1010 1.2.1 Termite Control Barrier System

Formulate and apply termiticide in accordance with the manufacturer's label directions. The termiticide label shall bear evidence of registration by the U.S. Environmental Protection Agency or appropriate requirements of the host country.

Apply termiticide to the soil that will be covered by or lie immediately adjacent to the building(s) and structure(s), providing a protective barrier against subterranean termites.

Maintain the Pest Management Maintenance Record, DD Form 1532-1 and submit the Pest Management Report, DD Form 1532 as required.

Applicator(s) shall be licensed or certified by the Federal government or the state or the host country, as applicable.

A1010 1.2.2 Warranty

Furnish a 3 year written warranty against infestations or reinfestation by subterranean termites of the buildings or building additions constructed under this contract. Perform annual inspections of the building(s) or building addition(s). If live subterranean termite infestation or subterranean termite damage is discovered during the warranty period, and building conditions have not been altered in the interim, the Contractor shall:

a. Perform treatment as necessary for elimination of subterranean termite infestation;
b. Repair damage caused by termite infestation;
c. Reinspect the building approximately 180 calendar days after the repair.

A1010 1.2.3 Visual Inspection Guide

To maintain resistance to termites, complete the system and do not disturb, penetrate or damage during the remaining contract time period. Provide Manufacturer’s Guidance for performing a visual assessment of the installed system to ensure the system provides the designed termite physical barrier.

A101001 WALL FOUNDATIONS

Provide foundation walls as required in accordance with the requirements of this section and other portions of this RFP.

A101002 COLUMN FOUNDATIONS AND PILE CAPS

Provide column foundations or pile caps and grade beams as required in accordance with the requirements of this section and other portions of this RFP.

A1020 SPECIAL FOUNDATIONS

A102001 PILE FOUNDATIONS

Where piles are required, design, install, and test piles (including sheet piles, as applicable) in accordance with UFC 1-200-01, except as noted otherwise. Provide piles in accordance with the requirements of the Contractor’s Geotechnical Engineer, and the following paragraphs.

A102001 1.1 DRIVING EQUIPMENT

Install piles (including sheet piles, as applicable) to the required tip elevation and capacity with the appropriate equipment as recommended by the Contractor's Geotechnical Engineer. Pile hammer shall be of sufficient weight and energy to suitably install piles without damage.

Drive production piles with the same hammer, cap block, and cushion materials, and using the same operating conditions as test piles, including pre-augering and spudding.

Pile driving equipment shall match the equipment assumptions on which the pile driving formulae used to determine blow counts are based.

A102001 1.2 INSTALLATION TOLERANCES

Locate the center of pile butts not more than four horizontal inches from the location indicated at cutoff elevation. Manipulation of the piles is not permitted. In addition to the stated tolerances, the clear distance between the heads of piles and the edges of pile caps shall be a minimum of five inches.

Locate top of sheet piles at cutoff elevation within 1/2 inch horizontally and 2 inches vertical of the location indicated. Manipulation of the piles is not permitted.

A variation of not more than 2 percent from the vertical for plumb piles, or not more than 4 percent from the required angle for batter piles will be permitted.

A102001 1.3 MISLOCATED AND DAMAGED PILES

Remove and replace with new piles those piles that are damaged, mislocated, or installed out of alignment tolerance or provide additional piles, installed as directed by the Contractor's Geotechnical Engineer and approved by the Contracting Officer, at no additional cost to the Government.

A102001 1.4 PILE SPACING

For cast-in-place concrete or augercast piles, provide adequate distance, as determined by the Contractor's Geotechnical/Structural Engineer, between freshly placed concrete and other pile installation operations to avoid damage to concrete.

A102001 1.5 COATED PILES

Handle treated or coated piles so as to protect the treatment or the coating. Repair damage or defects to treatment or coating.

A102002 CAISSONS

If required, provide caissons as required in accordance with the requirements of this section and other portions of this RFP.

A102003 UNDERPINNING

If required, underpin existing construction as required in accordance with the requirements of this section and other portions of this RFP.

A1030 SLAB ON GRADE

A103001 STANDARD SLAB ON GRADE

If allowed by site conditions and recommended by the Contractor-provided Geotechnical Engineer, provide standard concrete slab on grade to meet the required loading requirement in accordance with the requirements of this section and other portions of this RFP.

Floor slab on grade shall be designed and constructed in accordance with EM 1110-1-1904, Settlement Analysis and so that any settlement of the floor slab shall not result in harmful distortion of the floor, nor vertical misalignment of the floor with other building components (such as doorways and trenches), building utilities or with pile-supported building elements. If these above conditions cannot be met, provide a pile supported slab.

SECTION B20

EXTERIOR ENCLOSURE
05/14

B20 GENERAL

RFP Part 3 including the Engineering System Requirements (ESR) provide project specific requirements. The RFP Part 4, Performance Technical Sections (PTS) provide generalized technical requirements that apply to multiple facility types and include more requirements than are applicable to any one project. Therefore, only the RFP Part 4 requirements that apply to the project and further define the RFP Part 3 project specific requirements are required.

B20 1.1 DESIGN GUIDANCE

All new components of the exterior enclosure must match existing adjacent construction in all aspects. Provide the design and installation in accordance with the following references. This Performance Technical Specification (PTS) adds clarification to the fundamental requirements contained in the following Government Standards. The general requirements of this PTS section are located in PTS Section Z10, *General Performance Technical Specification*.

Industry standards, codes, and Government standards referenced in the section text that are not found in the Unified Master Reference List (UMRL) in the Construction Criteria Base (CCB) at the Whole Building Design Guide Website , are listed below for basic designation identification. Comply with the required and advisory portions of the current edition of the referenced standard at the time of contract award.

B20 1.1.1 Industry Standards and Codes

NATIONAL LUMBER GRADES AUTHORITY (NLGA)

B20 1.1.2 Government Standards

Military Handbook 1013/1A, Design Guidance for Physical Security of Facilities

UNIFIED FACILITIES CRITERIA (UFC)

UFC 1-200-01	General Building Requirements(A reference in this PTS section to UFC 1-200-01 requires compliance with the Tri-Service Core UFCs that are listed in UFGS Section 01 33 10.05 20, which includes the following significant UFC(s): UFC 3-101-01, Architecture)
UFC 1-200-02	High Performance and Sustainable Buildings

B20 1.2 PERFORMANCE VERIFICATION AND ACCEPTANCE TESTING

Verification of satisfactory exterior enclosure system performance must be via Performance Verification Testing, and by field inspection as detailed in this section of the RFP. Provide special tests and special inspections in accordance with UFGS Section 01 45 00.05 20, *Design and Construction Quality Control*. The Contractor must pay the cost of all testing.

B20 1.2.1 Required Brick Masonry Testing and Field Samples

a. Where field testing is required, masonry strength must be determined in accordance with ACI 530.1.

b. Field Samples: Masonry Panel Requirements - At the job site submit for approval by the Designer of Record, a sample masonry panel minimum 8 feet (2.4 meters) long by a minimum of 4 feet (1.2 meters) high. Actual Sample size will be determined by number of components in the sample wall but provide a span of at least 4 feet (1.2 meters) of uninterrupted brickwork and 2 feet (.6 meters) above wall openings. The approved sample must exhibit the standard for workmanship and materials for the project. The sample panel must include brick coursing, bond, weep holes, flashing, thickness, anchors, joint reinforcing, wall ties, rigid-board insulation, intersection of walls, bond beams, expansion and control joints, and tooling of joints, range of color, texture of masonry, and mortar color; or cold-formed steel framing, insulation, fiberglass-faced gypsum sheathing, air barrier, moisture barrier/vapor retarders, exterior enclosure barrier connections to adjoining construction, sealing of exterior enclosure barrier penetrations, sealant, masonry ties and anchors, and tooling of joints, the range of color and texture of brick veneer, and the color of mortar. The sample panel must be protected from damage and must remain at the site until masonry work is complete and approved, at which time the panel must be removed from the site. If there are windows or curtain walls in the project which interface with the masonry, a cut-away sample window or curtain wall mock-up must be installed in the masonry field panel, with all accessories, finishes, and trim (see B20 1.2.4 and 1.2.5). Masonry work must match the approved sample.

B20 1.2.2 Air Barrier Field Sample

Designate a portion of the project that reveals the various edge, seam, transition, and penetration conditions that the air barrier is exposed to. Determine this location with the Contracting Officer and obtain approval of the sealing methods employed on the project from the air barrier Manufacturer. Leave sample area exposed to view as long as practical to serve as a construction standard and comparison of future air barrier construction on the project. Before construction covers the sample area, provide detailed photographs of the air barrier details for future

reference.

B20 1.2.3 Air Barrier Performance

Provide air barrier inspection on all projects and air barrier performance testing when required in RFP Part 3, section B20.

B20 1.2.3.1 Air Barrier Inspection

Coordinate all subcontractors that provide part of the air barrier construction to provide an air tight barrier. Review the air barrier prior to being covered by subsequent construction to confirm that the air barrier complies with the following requirements;

a. Prior to applying an air barrier, confirm that the substrate complies with conditions required by the applied air barrier material manufacturer.
b. Air barrier must create a continuous barrier, without gaps, "fish mouths", holes, unsealed seams, or unsealed penetrations.
c. Air barrier components are compatible and capable of being permanently connected to form an air tight barrier.
d. Construction of the air barrier complies with air barrier design as indicated in the Design Analysis and exterior enclosure barrier drawings.
e. Air barrier is installed in accordance with manufacturer's standard details available on the Air Barrier Association of America (ABAA) website named "Air Barrier Materials, Components, Assemblies & Systems" and found at the following web link; http://www.airbarrier.org/materials/assemblies_e.php

B20 1.2.3.2 Air Barrier Performance Testing

Provide air barrier testing and repair as follows (coordinate with infrared thermal testing):

a. Provide a testing plan as a part of the Commissioning Plan and notify the Contracting Officer 7 working days before the testing will take place. Do not test the building until verifying that the continuous air barrier is in place and installed without failures in accordance with installation instructions so that repairs to the continuous air barrier, if needed to comply with the required air leakage rate, can be done in a timely manner.

   Also coordinate building access during the test with the Contracting Officer. Perform pretest inspection with all parties involved in the test and possible repairs of the building enclosure. Record pretest conditions and utilize pictures to assist in the documentation.
b. Perform testing as described in "U.S. Army Corps of

Engineers Air Leakage Test Protocol for Building Envelopes Version3, May 11,2012." The air leak flow rate must not exceed 0.25 CFM at 75 Pa per square foot (0.076 cmm 75 Pa per square meter) of building enclosure area including roof or ceiling, walls and floor as provided by the DOR.

Method 1: This test consists of measuring the flow rates required to establish 12 positive and 12 negative building pressures from at least 25 Pa to at least 50 Pa. At least 12 bias pressure readings must be taken across the building enclosure and averaged over 5 seconds each before and after the test. None of these readings must exceed 30% of the minimum test pressure.

Method 2: this test consists of measuring the flow rates required to establish 12 positive building pressures from at least 50 Pa to at least 75 Pa. At least 12 bias pressure readings must be taken across the building enclosure and averaged over 5 seconds each before and after the test. None of these readings must exceed 20% of the minimum test pressure.

The test results must be either pass or fail. Provide the theoretical size of the opening that leaks the same amount as the building enclosure at 75 Pa, to facilitate the search for leaks and repair of the exterior enclosure.

c. Provide infrared thermography to determine air leakage paths if facility fails to retain the required air pressure in the test above. Utilize infrared cameras with a resolution of 0.1 degree C or better.

Prerform infrared thermography in accordance with ISO 6781:1983 and ASTM C1060-90(1997). Determine air leakage pathways in accordance with ASTM E1186-03 *Standard Practices for Air Leakage Site Detection in Building Envelopes and Air Barrier Systems*, and perform corrective work as necessary to achieve the whole building air leakage rate specified.

Modify construction to stop identified air leakage until target 0.25 cfm/ft2 is reached. Correct air path leaks at the source of the leak, do not use sealant to close air leakage paths that are required to be opened for maintenance of the facility such as fixtures, switches covers, receptacle covers, access doors,...etc.

d. Air leaks must be sealed in the following order of priority: 1. Top of the building. These include attics, roof/wall intersections, penthouse doors and walls, HVAC equipment.

2. Bottom of the building. These include

ground floor access doors and inspection hatches, exhaust and air intake vents, service penetrations of enclosure, crawl spaces.

3. Vertical shafts. These include gasket stairwell fire doors, fire hose cabinets and recessed toilet accessories connected to vertical shaft, vertical and horizontal utility penetrations in service rooms, elevator rooms and shafts.
4. Exterior walls. These include weather strip doors and windows, exhaust fans and ducts, service penetrations, electrical receptacles, wall base.

B20 1.2.4 Thermal Envelope Performance Testing (Infrared Thermography)

Where required in RFP Part 3, provide infrared thermal testing and repair as follows (coordinate with air barrier testing):

a. Test the building envelope using Infrared Thermography technology. The thermography testing must be completed in accordance with the requirements of ASTM C1060 (latest edition) and ISO 6781. The Contracting Officer will witness the testing. Testing must occur just before the building air tightness test. Testing must also occur during the air tightness test so that areas of building air leaks are detected. If the building air tightness test is failed, thermographic testing must be repeated just before and during subsequent air tightness tests until the air tightness test is successful.
b. Thermography Test Procedures: Submit detailed test procedures indicating the test apparatus, the test methods and procedures, and the analysis methods to be employed not later than 60 days after Notice to Proceed.
c. Thermography Test Report: Provide a report. The report must include thermographs in color and a color temperature scale to define the temperature indicated by the various colors. The report must identify the high temperature reading, the outdoor air temperature, the building indoor air temperature, and the wind speed and direction. The report must note any areas of compromise in the building envelope, and must note all actions required and taken to correct those areas.
d. Final Test: Final thermography test report must demonstrate the problem areas have been corrected. Submit the complete test and analysis for review and approval.

B20 1.2.5 Required Records for Concrete Wall Panels

a. Cast-in-place - Submit to DOR mandatory batch ticket information as ASTM C 94 for each load of ready-mixed concrete.
b. Submit to DOR commercial testing results in accordance with

PCI MNL-117 and as required in paragraph entitled "Sampling and Testing for Precast"

B20 1.2.6 Precast Concrete Wall Panel Surface Finish Sample

Submit to DOR a concrete wall panel sample 12 inches (300 mm) by 12 inches (300 mm) by approximately 1 1/2 inches (38 mm) in thickness, to illustrate quality, color, and texture of both exposed-to-view surface finish and finish of panel surfaces that will be concealed by other construction. Obtain initial approval of color and texture from DOR prior to submission of sample panels.

B20 1.2.6.1 Manufacturing Plant Sampling And Testing for Precast

Plant Quality Control - PCI MNL-117 for PCI enrolled plants. Where panels are manufactured by specialists in plants not currently enrolled in the PCI "Quality Control Program," provide a product quality control system in accordance with PCI MNL-117 and perform concrete and aggregate quality control testing using an approved, independent commercial testing laboratory. Submit test results to the Contracting Officer.

a. Aggregate Tests: ASTM C 33. Perform one test for each aggregate size, including determination of the specific gravity.
b. Strength Tests: ASTM C 172. Provide ASTM C 39 and ASTM C 31/C 31M compression tests. Perform ASTM C 143 slump tests. Mold six cylinders each day or for every 20 cubic yards (15 cubic meters) of concrete placed, whichever is greater. Perform strength tests using two cylinders at 7 days and two at 28 days. Cure four cylinders in the same manner as the panels and place at the point where the poorest curing conditions are offered. Moist cure two cylinders and test at 28 days.
c. Changes in Proportions: If, the compressive strength falls below that specified, adjust the mix proportions and water content and make necessary changes in the temperature, moisture, and curing procedures to secure the specified strength. Notify the Contracting Officer of all changes.
d. Strength Test Results: Evaluate compression test results at 28 days in accordance with ACI 214 using a coefficient of variation of 20 percent. Evaluate the strength of concrete by averaging the test results (two specimens) of standard cylinders tested at 28 days. Not more than 20 percent of the individual tests must have an average compressive strength less than the specified ultimate compressive strength.

B20 1.2.6.2 Acceptable Appearance

Refer to *Architectural Precast Concrete*by the Prestressed Concrete Institute, in the "Acceptability of Appearance"

paragraph for reasons to reject precast panels. Panels in place may be rejected for any one of the product defects or installation deficiencies remaining after repairs and cleaning have been accomplished. "Visible" means visible to a person with normal eyesight when viewed from a distance of 20 feet (6 meters) in broad daylight.

B20 1.2.7 Window Sample Mock-Up

a. Provide mock-up of one (1) typical combination window unit to be used within the project and conduct a field mock-up test in strict compliance with AAMA 502 method A and method B. Each opening will be tested to achieve performance of ASCE 7-02 calculated requirements (PSF or Kg/m2) for water resistance, which must not exceed .667 % of the products capable water based on AAMA 101/I.S.2. Allowable rates of air leakage for field testing must be 1.5 times applicable AAMA 101/I.S.2 rate for the Product Type and Performance Class.

b. Opening is to be tested under "Quality Control" testing by a designated independent testing agency.

1) Schedule mock-up installation sufficiently in advance of need to allow adequate time for cure of sealants, testing and reconstruction, if needed, without delaying the project.

2) Build mock-up in building enclosure wall in location selected by Owner and Architect.

3) Modify mock-up construction and perform additional tests as required to achieve specified minimum acceptable results. If corrections are not adequate, construct new mock-up, at written direction of Owner and Architect. Co-ordinate construction of mock-up with other involved trades.

4) Approved mock-ups may become part of completed Work if undisturbed at time of Substantial Completion.

5) Flood test Mock-up window subsill and obtain approval of DOR prior to installing window unit.

B20 1.2.8 Curtain Wall Systems Field Sample and Testing

a. At the job site submit for approval by the Designer of Record, a sample curtain wall installation which may be a cut-away portion of a curtain wall, if appropriate, to show the construction, the workmanship, tie-in to building, infiltration and moisture barriers, wrap, flashing, head, window unit installation where required, sill, lintel if required, interior and exterior trim, anchors and reinforcing, and sealants.

b. Provide mock-up of (1) designated Curtain Wall System unit to be used in conducting a field mock-up test in strict compliance with AAMA 503 method A and method B. Each opening will be tested to achieve performance of ASCE 7-05

calculated requirements (PSF or Kg/m2) for water resistance, which must not exceed the derived water expectation of 0 infiltration at the calculated Design Pressure. Allowable rates of air leakage for field testing must be .30 CFM/Ft2 of wall area test specimen. Performance test at 6.24 PSF (30.3 Kg/m2) allows .30 cfm/ft2. Opening is to be tested under "Quality Control" testing by a designated independent testing agency.

1) Schedule mock-up installation sufficiently in advance of need to allow adequate time for cure of sealants, testing and reconstruction, if needed, without delaying the project.

2) Build mock-up in building enclosure wall in location selected by DOR.

3) Modify mock-up construction and perform additional tests as required to achieve specified minimum acceptable results. If corrections are not adequate, construct new mock-up, at written direction of DOR. Co-ordinate construction of mock-up with other involved trades.

4) Approved mock-ups may become part of completed Work if undisturbed at time of Substantial Completion.

The sample curtain wall must be protected from damage and must remain at the site until curtain wall construction work is complete and approved, at which time the panel must be removed from the site. On projects where the curtain wall interfaces with masonry walls, a cut-away sample curtain wall must be installed with the masonry sample panel. Curtain wall installations must match the approved sample.

Water Penetration: No water penetration must occur when the wall is tested in accordance with ASTM E 331 at a differential static test pressure of 20 percent of the inward acting design wind pressure as specified, but not less than 15 psf (80 Kg/m2). Make provision in the wall construction for adequate drainage to the outside of water leakage or condensation that occurs within the outer face of the wall. Leave drainage and weep openings in members and wall open during test.

B20 1.3 DESIGN SUBMITTALS

Design submittals must be in accordance with Z10, *General Performance Technical Specifications*, UFGS section 01 33 10.05 20, *Design Submittal Procedures*, UFC 1-300-09N, *Design Procedures*, UFC 3-101-01, *Architecture*and UFC 3-301-01, *Structural Engineering*.

In addition, UFGS sections listed below or in the body of the PTS text are to be used by the Designer of Record (DOR) as a part of the design submittal. If the UFGS products or systems are applicable to the project, the DOR must edit these referenced UFGS sections and submit them as a part of the design submittal specification. Edit the specification sections in accordance with the limitations stated in PTS section Z10, *General Performance Technical Specifications*.

UFGS 08 34 16.10, *Steel Sliding Hangar Door*

UFGS 08 34 16.20, *Vertical Lift Fabric Door*

B20 1.4 CONSTRUCTION SUBMITTALS

Submit construction submittals in accordance with PTS Section Z10, *General Performance Technical Specifications*. In addition to the Z10 requirements, the Designer of Record (DOR) must approve the following submittals as a minimum;

Shop drawings for reinforcing steel in masonry walls, doors, door hardware, windows, storefront, curtainwall, glazing, paint, exterior enclosure barrier systems, and visible exterior materials.

All structural elements necessary for construction.

B20 1.4.1 Manufacturer's Verification Inspection Documentation for Galvanized Steel

Manufacturer's verification inspection documentation must be submitted for all galvanized steel in accordance with ASTM A123, ASTM A 153, and ASTM A 653.

B20 1.4.2 Field Inspection of Field-erected Concrete Panels

a. Perform field inspection of panel welded connections. Furnish the services of AWS-certified welding inspector for erection inspections. Welding inspector must visually inspect all welds and identify all defective welds.
b. The DOR must be notified in writing of defective welds, bolts, nuts and washers within 7 working days of the date of inspection. All defective connections or welds must be removed and re-welded or repaired as required by the DOR.

B20 1.4.3 Sustainable Construction Submittals

Submit sustainable construction submittals in accordance with UFGS 01 33 29.05 20 Sustainability Requirements for Design-Build.

B2010 EXTERIOR WALLS

Provide exterior wall construction that consists of exterior skin system of non-structural outside face elements with rain-screen back-up wall systems that include; flashing (embedded, exposed, and thru-wall), a water resistive barrier, moisture barrier/ vapor retarder (if required), air barrier, and insulation systems with interior skin system materials to provide a protective finish on the inside face of exterior walls. Provide all components necessary to for a shingled water resistive barrier to direct water that would penetrate the wall to be directed to the outside of the wall. Provide exterior enclosure components and barriers in accordance with UFC 3-101-01, *Architecture*.

Design all work to comply with UFC 3-101-01, *Architecture*, and UFC 3-301-01, *Structural Engineering*, and the following requirements:

a. Vapor Pressure and Hygrothermal Analysis - Perform a job specific vapor pressure and hygrothermal analysis in accordance with UFC 3-101-01, *Architecture*. The conclusion of the analysis must indicate if a moisture barrier/ vapor retarder is required, the appropriate locations of needed moisture barrier/ vapor retarder, and anticipated dew-point locations in the exterior enclosure during different critical times of the year.
b. Wind Loads - Provide wind load calculations for exterior cladding in accordance with UFC 1-200-01 and UFC 3-301-01 with comparative analysis of the cladding system to be provided.
c. Water Penetration - No water penetration must occur at a pressure of 8 psf (39 Kg/m2) of fixed area when tested in accordance with ASTM E 331.
d. Insulating Value – Comply with UFC 3-101-01, Architecture for the ASHRAE requirements defining the minimum insulating value of the complete wall system.

B201001 EXTERIOR CLOSURE

B201001 1.1 MASONRY VENEER EXTERIOR WALL CLOSURE COMPONENTS

B201001 1.1.1 General Requirements

a. The masonry veneer includes the non-load bearing exterior walls of the structure, and also includes colored mortar, special shapes such as sills, headers, trim units and copings of brick masonry, precast concrete, concrete masonry units, or other approved materials. The veneer must be tied to the backup wall system with a system that allows the veneer to move independently of the backup wall system, while being structurally supported. Allow for expansion and contraction of the veneer without cracking the exterior material.
b. Use running bond, tooled concave joints and full head joint weeps at 24 inches (610 mm) o.k. in the course immediately above the base flashing. Where rowlocks are permitted, slope rowlocks and project not less than 1/2 inch (13 mm) beyond the face of the wall to form a wash and drip. Where required, provide colored mortar conforming to ASTM C270. Provide special shapes where required.
c. Locate expansion/control joints and seal with proper backing material and ASTM C 920 polyurethane sealant, or preformed foam or rubberized expansion joint closure. Conform to UFC 3-101-01 and BIA Technotes 18, 18A. Match joint color of the brick, unless DOR directs otherwise.
d. Conform to ACI 530.1 for masonry veneer installation, including cold weather construction. Antifreeze admixtures are not to be used.
e. Clean the masonry in accordance with manufacturer's instructions and BIA Technote 20.
f. Utilize BIA Technical Notes to design, detail, and construct brick masonry walls. This PTS section amends the BIA documents and takes precedence over similar BIA requirements. Substitute directive language in the place of BIA suggestive language as required in PTS Section Z10,

General Performance Technical Specifications. The results of these wording substitutions change this document to required procedures.

B201001 1.1.2 Face Brick

a. Brick Masonry Appearance - Do not change source or supply of materials after brick manufacturing work has started. Blend all brick to produce a uniform appearance when installed. An observable "banding" or "layering" of colors or textures caused by improperly mixed brick is unacceptable.
b. Brick Type – Provide brick in accordance with ASTM C216, Grade SW, type FBX. Test rating of ASTM C67 must be "Not effloresced".

B201001 1.1.3 Split Faced or Ground Faced Masonry

ASTM C 90. If required, provide split faced or ground faced units, or split-ribbed units or scored-faced units.

B201001 1.1.4 Cast Stone Trim Units

a. Cast stone must be the product of a manufacturer regularly engaged in the manufacture of architectural cast stone (precast concrete building unit) products. Meet or exceed the requirements of ASTM C 1364.
b. Trim units of cast stone must include sills, fascia, header units, copings and other trim units as required by the approved design

B201001 1.1.5 The Wall Cavity

Comply with UFC 3-101-01 and BIA Technical Notes 21A, 21B, 21C, 28B.

B201001 1.1.6 Through-Wall Flashing Components

Provide through-wall flashing over all openings, spandrels, shelf angles, lintels, and built-in structural steel members. Provide through-wall flashing below all openings, parapets copings, sills, and at the base of the wall. Provide a method of weeping water collected by the through-wall flashing to the outside of the wall.

a. Incorporate weep holes to align with through-wall flashing in cavity wall construction as required by UFC 3-101-01 and BIA Technotes. Install flashing according to BIA Technotes 7, 7A, 7B, 21A, 21B, 21C, 28B, and SMACNA figures 4-1A and 4-1B. Extend metal drip edge flashing beyond the wall plane using a 1/4 inch (6 mm) preformed 45 degree angle turn down.
b. Flashing material must be as required by UFC 3-101-01 and the following: Provide flashing of 7 ounce copper flashing with a 3 ounce bituminous coating on each side or a fiberglass fabric bonded on each side of the copper sheet. Sixteen (16) ounce uncoated copper, 28 gauge Type 302 or

304 stainless steel is also acceptable. 'Flexible membrane flashing, plastic or PVC-based membrane flashing is prohibited. Lap and seal turndown solid metal drip edge flashing to through- wall flashing. Refer to "Flashing" in this section to find requirements for non-through-wall flashing.

c. Incorporate the through-wall flashing in the water resistive barrier and seal joints to flashing to form a shingled effect and direct water to the exterior to the exterior enclosure and away from back-up wall assembly.

d. Where flashing is not continuous, such as at masonry wall opening heads and sills, extend flashing four inches beyond each side of the opening and turn up ends to form a pan and prevent water from reentering the wall cavity.

B201001 1.1.7 Reinforcing in Veneer Layer

Reinforcing in the veneer layer must be galvanized in accordance with ASTM A 123/A123M, ASTM A153/A153M, or ASTM A653/A653M, Z275 (G90) coating, and be of sufficient size to eliminate damage to the veneer layer from wind and other live and dead loads imposed on the veneer layer.

B201001 1.2 METAL WALL PANEL EXTERIOR CLOSURE

B201001 1.2.1 General Wall Panel Requirements

a. Factory Color Finish – Provide panels with a factory applied, baked coating to the exterior and interior of metal wall panels and metal accessories. Exterior finish topcoat must be of 70 percent polyvinylidene fluoride (PVDF) resin with not less than 0.8 mil dry film thickness (DFT). Provide exterior primer that is standard with panel manufacturer but not less than 0.8 mil dry film thickness (DFT). Provide factory applied 70 percent PVDF clear coating of 0.8 mil DFT over the color topcoat and edge coating for projects within 300 feet (91 meters) of a water shoreline or industrial environment. Field apply 70 percent PVDF clear coat to unfinished panel edges or field cut panels. Interior finish exposed to sun or rain must be the same coating and DFT as the exterior coating.

b. Wall system and attachments must resist wind loads as determined by ASCE 7, with a factor of safety appropriate for the material holding the anchor. Maximum deflection due to wind on aluminum wall panels must be 1/60. Limit maximum deflection due to wind on steel wall panels and girts behind aluminum or steel wall panels to 1/120 of their respective spans, except that when interior finishes are used limit the maximum allowable deflection to 1/180 of their respective spans. The structural performance test methods and requirements of the wall system and attachments must be in accordance with ASTM E 1592.

c. Conformations - Non-insulated steel or aluminum wall panels must have configurations for overlapping adjacent sheets or interlocking ribs for securing adjacent sheets and fastened to framework using exposed or concealed fasteners, as specified. Provide sheets of sufficient length to cover

the entire height of any unbroken wall surface when the length of run is 30 feet (9 meters) or less. Design wall systems with provisions for expansion and contraction. Where required, provide series 305 stainless steel fasteners factory finished to match panels.

d. Shape - Standard V-beam or boxed beam type having 5 to 8 inch (125 mm to 200 mm) pitch for steel panels or 4 to 8 inch (100 mm to 200 mm) pitch for aluminum panels, and 1.5 inch (38 mm) overall depth, exclusive of coating. Other shapes may be considered if approved by the DOR.

B201001 1.2.2 Steel Wall Panels

a. Material and Coating - Form sheets from steel conforming to ASTM A 653/A 653M, Structural Grade 40, galvanized coating conforming to ASTM A 924/A 924M, Class G-90; aluminum-coated steel conforming to SAE AMS 5036; or steel-coated with aluminum-zinc alloy conforming to ASTM A 792/A 792M, except that coating chemical composition must be approximately 55 percent aluminum, 1.6 percent silicon, and 43.4 percent zinc with minimum coating weight of 0.5 ounce per square foot.

b. Gage - Minimum 22 U.S. Standard Gage for wall panels, but in no case lighter than required to meet maximum deflection requirements specified.

B201001 1.2.3 Aluminum Wall Panels

a. Material and Coating - Form sheets of Alloy 3004 or Alclad 3004 conforming to ASTM B 209 having proper temper to suit respective forming operations.

b. Thickness - Minimum 0.032 inch (0.81 mm) nominal, but in no case thinner than that required to meet maximum deflection requirements specified.

B201001 1.2.4 Insulated Aluminum or Steel Wall Panels

Insulated wall panels must be steel or aluminum factory-fabricated units with insulating core between metal face sheets securely fastened together and uniformly separated with rigid spacers. Provide factory color finish on panels. Insulation must be compatible with adjoining materials and capable of retaining its R-value for the life of the metal facing sheets; and unaffected by extremes of temperature and humidity. The assembly must have a flame spread rating not higher than 25, and smoke developed rating not higher than 50 when tested in accordance with ASTM E 84. Panels must be not less than 8 inches (200 mm) wide and must be in one piece for unbroken wall heights.

Provide wall panel edge configurations with interlocking ribs for securing adjacent panels. Utilize factory fabricated corners and trim pieces at intersections with other materials. Fasten wall panels to framework using concealed fasteners. Install in accordance with DOR-approved shop drawings and manufacturer's recommendations.

a. Insulated Steel Panels - Zinc-coated steel conforming to

ASTM A 653/A 653M; or Aluminum-zinc alloy coated steel conforming to ASTM A 792/A 792M, AZ 55 coating. Uncoated wall panels must be 0.024 inch (0.61 mm) thick minimum.

b. Insulated Aluminum Panels - Alloy conforming to ASTM B209, temper as required for the forming operation, minimum 0.032 inch (0.81 mm) thick.

B201001 1.3 STUCCO EXTERIOR WALL CLOSURE

B201001 1.3.1 Portland Cement Plaster

ASTM C150, gray Portland cement Type II with 1/2 inch (13 mm) maximum chopped alkali resistant fiberglass strands, minimum 1.5 percent by weight to cement; 1 1/2 pounds (.68 kg) per sack of cement. Lime must conform to ASTM C206, Type S. Utilize stainless steel or zinc corner beads, J-beads and other accessories for the system.

a. Unless specifically deleted, utilize an acrylic admixture or coating to give additional moisture suppression to control fungus growth for the system.
b. Sand aggregate for job-mixed base coat and job-mixed finish coat stucco must conform to ASTM C897.
c. Sand for Finish Coats: Natural color and graded within the limits shown above for basecoats, except that the sand must pass the No. 8 sieve, and for smooth finish the sand must pass the No. 30 sieve.
d. Mix scratch coat in proportion of one part by volume Portland cement, 3/4 to 1 1/2 parts by volume hydrated lime and 2 1/2 to 4 parts sand (volume of sand per sum of cement and lime). Mix brown coat in proportion of one part by volume Portland cement, 3/4 to 1 1/2 parts by volume hydrated lime and 3 to 5 parts sand (volume of sand per sum of cement and lime). Mix proportions can vary depending on climate and application variations, with the approval of the DOR.
e. Portland Cement Stucco Finish Coat 3 to 5 parts sand (volume of sand per sum of cement and lime).
f. Portland cement plaster application must be in accordance with ASTM C 926. Furring and lath application must be in accordance with ASTM C 1063.
g. Bonding Agents: ASTM C 932. Provide for exterior applications to masonry or concrete substrates.
h. Provide water resistive barrier under stucco in accordance with manufacturer’s recommendations and code requirements.

B201001 1.4 EXTERIOR INSULATION AND FINISH SYSTEM (EIFS)

EIMA TM 101 and 01 EIMA TM 101.86. Refer to the RFP Part 3 Project Program to determine if EIFS is used as the non-primary or the primary exterior finish material for the project. Job-fabricate the exterior insulation and finish system (EIFS) covering consisting of sheathing, water resistive barrier, moisture drainable insulation board system, reinforcing fabric, base coat, finish coat, adhesive, primer, accessories, flashing, sealant, and mechanical fasteners. The system components must be compatible with each other and with the substrate as recommended or approved by, and the products of, a single manufacturer

regularly engaged in furnishing Exterior Insulation and Finish Systems. Install all materials using an applicator trained and approved by the system manufacturer in accordance with DOR-approved shop drawings and manufacturer's recommendations. Provide EIFS Class PB or Class PM. Do not use Class PB EIFS in first floor, high traffic areas, or in areas where pedestrians congregate without at least one layer of 20 ounce (567 grams) reinforcing fabric mesh. Use 1/8 inch (4 mm) minimum thickness for PB finish system. Color of the EIFS finish must be consistent, with no variation noticeable to the DOR. Seal all joints in EIFS in accordance with ASTM C 1481 and as recommended by the manufacturer. Furnish manufacturer's standard warranty for the EIFS. Provide warranty directly to Government and cover a period of not less than 5 years from date Government accepted the work.

B201001 1.4.1 EIFS System Components

a. Glass Mat Gypsum Sheathing Board - Conform to ASTM C 1177/C 1177M. Nail Pull Resistance: No less than 120 lb (54.4 Kg) when tested in accordance with ASTM C 473.
b. Mechanical Fasteners - Corrosion resistant and as approved by EIFS manufacturer. Select fastener type and pattern based on applicable wind loads and substrate into which fastener will be attached, to provide the necessary pull-out, tensile, and shear strengths.
c. Thermal Insulation - Drainable type. Do not use any layer of insulation less than 3/4 in (19 mm) thick. The maximum thickness of all layers mustl not exceed 4 in (101 mm). Insulation Board must be certified as aged, in block form, prior to cutting and shipping, a minimum of 6 weeks by air-drying, or equivalent. Insulating material must conform to ASTM C 578, Type I or IV, as recommended by the EIFS manufacturer and treated to be compatible with other EIFS components.
d. Reinforcing Fabric - Reinforcing fabric mesh must be alkali-resistant, balanced, open weave, glass fiber fabric made from twisted multi-end strands specifically treated for compatibility with the other system materials, and comply with EIMA TM 105.01 and as recommended by EIFS manufacturer.

B201001 1.5 CONCRETE EXTERIOR WALL CLOSURE

B201001 1.5.1 Precast Concrete Wall Panels:

ACI 211.1 and ACI 301. PCI MNL-116 or PCI MNL-117. Concrete must have a minimum 28-day compressive strength of 4000 psi (281 Kg/cm2). Air content of plastic concrete must be between 4 and 6 percent air by volume. Provide a dosage of air entraining agent, which will produce 19 plus or minus 3 percent air in a 1 to 4 by weight standard sand mortar in accordance ASTM C 185. Provide aggregate in accordance with ASTM C 33. Seal the panel joints with fully loaded and tooled sealant joints that are properly sized, shaped, and placed against manufacturer approved backing material. Sealant material thickness must not be less than 1/4 inch (6mm).

For rain screen precast panel wall systems with back-up wall

construction, provide sealed face joints that allow moisture to be drained from the wall cavity behind the precast panels via weeps. Provide flashing and water/ moisture resistant barriers to direct water from the wall cavity to the outside of the building. Locate weeps where cavity is obstructed such as above through-wall flashing, at head and sill flashing above and below windows, above door flashings, and wall base flashing.

For barrier wall precast panel wall systems without back-up wall construction, provide a two stage drained joint system on all precast panels joints. Design the two staged drained joint system to provide the following;

a. Locate all sealant beads on the exterior side of the backer rod. Align placement of the exterior sealant bead with the exterior surface of the precast panel and space the placement of the interior sealant bead as required below but no less than 3 inches (75 mm) from the face of the panel to the face of the interior tooled sealant bead.
b. Space sealant beads as far apart as possible but provide no less than 1 inch (25mm) clear air space between the exterior seal backer rod and the tooled interior sealant bead.
c. Form minimum of 1/2 inch (12mm) weep holes to facilitate drainage in the vertical sealant joints. Attach a bead of sealant to the interior vertical sealant bead with an outward slope and a drop in height of at least 4 inches (100mm) to form the drainage plane for the weep opening.
d. Locate weeps as necessary to allow complete drainage of water from the two stage air/ vent space. Provide weeps at obstructions in the air/ vent space such as through wall flashing, horizontal panel joints, head and sill flashing above and below windows, above door flashing, and wall base flashing.

Minimize cracking potential of precast concrete elements by implementing expansion and control joints in the precast assembly. Comply with the following;

a. Exposed Aggregates - In addition to the above aggregate, facing mixture aggregate, and aggregate for homogeneous panels with exposed aggregate finish, must be crushed stone.
b. Cement - ASTM C 150.
c. Admixtures - ASTM C 260 for air-entraining admixtures. Other admixtures: ASTM C 494. Certify that admixtures are free of chlorides.
d. Reinforcement - ACI 301.
e. Inserts - ASTM A 47, Grade 32510 or 35018, or may be medium strength cast steel conforming to ASTM A 27/A 27M, Grade U-60-30. Where exposed to moisture, provide inserts hot-dip galvanized after fabrication in accordance with ASTM A 153/A 153M.
f. Embedded Plates - ASTM A 36/A 36.
g. Flashing Reglets - Fabricate of sheet metal, open-type with continuous groove 1-1/8 inches (28 mm) deep minimum by 3/16 inch (5 mm) wide at opening and sloped upward at 45

degrees. Top surface must have toothed lip section to anchor upturned edge of metal snap-lock counter flashing when inserted. Provide stainless steel sheet metal, 0.011 inch (0.28 mm) minimum thickness, ASTM A 167, Type 302 or Type 304, Number 2D finish, soft temper.

h. Clip Angles - ASTM A 36/A 36M steel, galvanized after fabrication in accordance with ASTM A 153/A 153M.

i. Ferrous Casting Clamps - ASTM A 47, Grade 32510 or Grade 35018 malleable iron or cast steel, or ASTM A 27/A 27M, Grade U-60-30, cast steel casting, hot-dip galvanized in accordance with ASTM A 153/A 153M.

j. Threaded Fasteners – Provide galvanized machine bolts, washers and, when required, nuts.

1) Bolts: ASTM A 449, 3/4 inch (19 mm) diameter machine bolts with hexagon head.

2) Washers: ANSI B18.21.1, medium or heavy lock-spring washers.

3) Nuts: ASTM A 563, Grade C, heavy, hexagon-type nuts.

4) Square Nuts: ASTM A 563, Grade A, plain.

B201001 1.6 CONCRETE WALL PANEL RESTORATION

Materials, physical and chemical properties, and composition of new concrete must match that of existing concrete to be repaired, unless samples and testing determine that existing mixtures and materials are faulty or non-performing.

B201001 1.6.1 Existing Concrete Testing

Take representative samples of existing concrete from areas of the structure to be repaired at indicated locations. The samples must be taken in accordance with ASTM C 42 and ASTM C 823 and tested in accordance with ASTM C 39, ASTM C 42, ASTM C 295, ASTM C 457, ASTM C 856, ASTM C 1218/C 1218M, and ASTM C 642, ASTM C 114, and ASTM C 1084. Evaluate aggregates in the existing concrete in accordance with ASTM C 136 and ASTM C 295. Determine the air content of the existing concrete in accordance with ASTM C 457 and ASTM C 642.

B201001 1.6.2 Admixtures

Air entraining admixtures must conform to ASTM C 260, water-reducing or -retarding admixtures must conform to ASTM C 494, and pigments for integrally colored concrete must conform to ASTM C 979 and ASTM C 1017. Admixtures must not contain added chlorides.

B201001 1.6.3 Aggregates

Aggregates must conform to ASTM C 33.

B201001 1.6.4 Cement

Match cement composition of cement used in existing concrete to be repaired as determined by samples and testing and conforms to the basic requirements of ASTM C 150, Type I or II. Provide cement with non-shrink (shrinkage compensating) properties and conforms to ASTM C 1107, Class B or C, expansive cement type.

B201001 1.6.5 Pozzolan

Provide pozzolan to conform with ASTM C 618, Class F, including limit on available alkalis, "Table 2 - Supplementary Optional Chemical Requirements," and uniformity requirements, "Table 4 - Supplementary Optional Physical Requirements."

B201001 1.6.6 Epoxy Anchor Adhesives

Use epoxy-resin grout to bond steel anchors to concrete with a 100 percent solids, moisture insensitive, low creep, structural adhesive. The epoxy must conform to ASTM C 881, type IV; grade and class selected to conform to the manufacturer's recommendations for the application. The epoxy adhesive must be conditioned, proportioned, mixed, and applied in accordance with the manufacturer's recommendations, except as otherwise specified herein.

a. Epoxy-resin grout - Provide a two-component material, 100 percent solids by weight, formulated to meet the requirements of ASTM C 881, Type I or II. Use type I material when materials or atmospheric temperatures are 70 degrees F (21 degrees C) or above. Use type II material when materials or atmospheric temperatures are below 70 degrees F (21 degrees C). Provide epoxy-resin grout with the ability to structurally rebond cracks, delaminations, and hollow plane conditions in concrete; must be insensitive to the presence of water; and must have the capability to penetrate cracks down to 5 mils in width. Materials must have been successfully used in similar conditions for a period of at least five years.
b. Epoxy Injection Ports – Design injection ports for epoxy-resin grout for the intended use as required in this section and made according to the recommendation of the epoxy manufacturer.

B201001 1.7 WOOD SIDING SYSTEM

B201001 1.7.1 Horizontal Wood Siding

Horizontal Wood Siding: DOC PS 20, exterior, lap type, 6 inches wide, maximum practicable lengths, 7/16 inch (11 mm) thick, smooth face. Shop coat all surfaces of wood siding and trim with an alkyd primer.

a. Species and Grades

Utilize species and grades listed:

1) Grade 1 Common spruce-pine-fir; NELMA, NLGA, WCLIB, or WWPA.

2) Grade Prime or D finish, pressure-preservative-treated hem-fir; NLGA, WCLIB, or WWPA.

3) Grade D Select (Quality) eastern white pine, eastern hemlock-balsam fir-tamarack, eastern spruce, or white woods; NELMA, NLGA, WCLIB, or WWPA.

4) Grade D Select northern white cedar; NELMA or NLGA.

5) Grade B & B, pressure-preservative-treated southern pine; SPIB.

b. Water resistive barrier – Install to protect back-up wall assembly.

B201001 1.8 VINYL SIDING SYSTEM

Integrally colored, vinyl siding complying with ASTM D 3679. Horizontal or vertical pattern with exposure and shape to be compatible with overall design concept. Provide a water resistive barrier to protect back-up wall assembly and install in accordance with manufacturer's recommendations.

B201001 1.8.1 Texture, Thickness, Finish and Color

Wood grain texture. Minimum Nominal Thickness: 0.044 inch (1.1 mm). Minimum Profile Depth (Butt Thickness): 5/8 inch (16 mm) or 3/4 inch (19 mm). Nailing Hem: Double thickness. Comply with manufacturer's requirements for fastener types and nailing process.

B201001 1.8.2 Accessories

Provide integrally colored, premanufactured accessories to match siding. Use accessories at terminations with other materials.

B201001 1.9 MANUFACTURED FACED PANELS SYSTEMS EXTERIOR WALL SIDING

B201001 1.9.1 Glass Fiber Reinforced Cementitious Panels System

Siding made from fiber-cement board that does not contain asbestos fibers; complies with ASTM C 1186, Type A, Grade II; is classified as noncombustible when tested according to ASTM E 136; and has a flame-spread index of 25 or less when tested according to ASTM E 84. Provide a water resistive barrier under panel systems and install in accordance with manufacturers recommendations. Panel system must be a horizontal siding pattern in plain or beaded-edge style, unless vertical sheet panels are allowed by the RFP Part 3. Texture: Rough sawn or smooth, factory primed.

B201001 1.10 OTHER EXTERIOR WALL CLOSURE

B201001 1.10.1 Glass Block

a. Provide clear colorless glass block. Units to have polyvinyl butyral edge coating. Units to have 75 percent light transmission allowance. Utilize ventilators and accessories recommended by glass block manufacturer. Glass block specified is manufactured by Pittsburgh Corning Corporation. The manufacturer's name and catalog identification are provided to describe physical characteristics and functional requirements of the product desired. Other manufacturers' products that are considered to be the functional equivalent will be acceptable.

b. Provide DECORA, VUE, or ARGUS pattern for the exterior glass block units. Units designated as "reflective glass block" must have a highly reflective oxide surface coating of a gray color.

B201001 1.10.2 Concrete Unit Masonry

Masonry walls must comply with ACI 530.1. Load-bearing units: ASTM C90, Non-load bearing- units: ASTM C129, Type I or II. Provide ground face units, split-faced units, ground-faced units, or split-ribbed units for exposed exterior walls. Provide water repellent admixture to masonry units where the exterior face of the units will not receive a waterproof coating such as paint. Mortar must conform to ASTM C 270, Type S. Test mortar in accordance with ASTM C 780. Provide water repellent admixture and color additive in mortar for masonry walls that will not receive a waterproof coating such as paint. Do not use admixtures containing chlorides. Provide air entrainment, not to exceed 12 percent, in mortar.

a. Adjustable Anchors for Structural Members - Use adjustable anchors to anchor masonry structural steel columns or beams. Weld the fixed portion of the anchors (steel anchor rods) to the structural steel member. Provide adjustable anchors 3/16 inch (5 mm) diameter steel wire, triangular-shaped. Anchors attached to steel must be 5/16 inch (8 mm) diameter steel bars placed to provide 1/16 inch (1.6 mm) play between flexible anchors and structural steel members.

b. Deformed Bars - ASTM A 615/A 615M, ASTM A 616/A 616M, ASTM A 617/A 617M, or ASTM A 706/A 706M.

B201002 EXTERIOR WALL BACKUP CONSTRUCTION

B201002 1.1 CONCRETE UNIT MASONRY

Provide concrete unit masonry as described in B201001 1.10.2

Provide water resistive barrier on the cavity-facing wythe of the backup masonry. Coordinate water resistant barrier materials and methods to provide water control and vapor transmission control for the lifetime of the structure. Seal all holes and penetrations in the water resistive barrier and repair any material damaged by other

construction operations.

B201002 1.2 LOAD-BEARING METAL FRAMING SYSTEM

Exterior Studs:

Max. Deflection Criteria	Exterior Finish
L/360	Cement Plaster, Wood Veneer, Synthetic Plaster, Metal Panels
L/600	Brick Veneer, Stone Panels

Compute wall deflections on the basis that studs withstand all lateral forces independent of any composite action from sheathing materials. Design studs abutting windows or louvers not to exceed 1/4-inch maximum deflection and as required in UFC 4-010-01.

a. Studs - ASTM A 1003/ASTM A 1003M, Structural Grade 50, Type H minimum; provide Z180 (G60) galvanized coating in accordance with ASTM A 653/ASTM A 653M. Do not expose studs to direct moisture contact. Clearly stamp studs with manufacturer's name, initials, or logo, an ICBO number, material thickness and yield strength. Choose size and gage as required to meet the loading requirements specified.

b. Bracing - Provide horizontal bracing in accordance with design calculations and AISI SG-673, consisting of, as a minimum, runner channel cut to fit between and welded to the studs or hot- or cold-rolled steel channels inserted through cutouts in the web of each stud and secured to studs with welded clip angles. Provide bracing, as a minimum, at 5 feet (1.52 meters) o.c. for wind load only, and 3"-4"(1.0 meters) o.c. for axial loads.

c. Sheathing - Provide sheathing to withstand structural loads imposed on the wall structure. Cover sheathing with either a 15 pound asphalt-impregnated building paper, or air barrier as required by the wall moisture analysis. Provide one of the following sheathings:

(1) Plywood: C-D Grade, Exposure 1, with an Identification Index of not less than 24/0.

(2) Structural-Use and OSB Panels: Sheathing grade with durability equivalent to Exposure 1, Span Rating of 24/0 or greater.

(3) Gypsum: ASTM C 79/C 79M and ASTM C 1177/C 1177M, 1/2 inch (13 mm) thick fire retardant (Type X) 5/8 inch (15 mm) thick; 4 feet (1.2 meters) wide with square edge for supports 16 inches (400 mm) o.c. with or without corner bracing of framing. Face gypsum sheathing with materials capable of resisting six months of weathering exposure without degradation of the covering or the gypsum material. Seal all joints as recommended by the manufacturer.

d. Water resistive barrier – Install to protect back-up wall assembly.

B201002 1.3 WOOD FRAMING SYSTEM

Kiln-dry all lumber materials to comply with DOC PS 20. Installation must be in accordance with AF&PA T11. Use preservative pressure treated lumber at sill plates and other members in contact with concrete and masonry surfaces.

a. Species and Grades - Provide species and grades listed:

(1) Grade 2 Common spruce-pine-fir; NELMA, NLGA, WCLIB, or WWPA.

(2) Grade 2 Common, hem-fir; Douglas-fir; NLGA, WCLIB, or WWPA.

(3) Grade 2 Common, southern pine; SPIB.

b. Sheathing - Sheathing must withstand structural loads imposed on the wall structure. Cover sheathing with a water resistive barrier and other barriers as required by the vapor pressure and hygrothermal analysis. Provide one of the following sheathings:

(1) Plywood: C-D Grade, Exposure 1, with an Identification Index of not less than 24/0.

(2) Structural-Use and OSB Panels: Sheathing grade with durability equivalent to Exposure 1, Span Rating of 24/0 or greater.

(3) Gypsum: ASTM D 3273 for mold resistance, ASTM C 1177/C1177M, fire retardant (Type X) 5/8 inch (15 mm) thick; 4 feet (1.2 meters) wide with square edge for supports 16 inches (400 mm) o.c. with or without corner bracing of framing. Face gypsum sheathing with materials capable of resisting six months of weathering exposure without degradation or the covering or the gypsum material. Seal all joints as recommended by the manufacturer.

c. Water resistive barrier – Install to protect back-up wall assembly.

B201002 1.4 CAST-IN-PLACE CONCRETE SYSTEM

a. Unless otherwise noted herein, all concrete design and construction must be in accordance with UFC 1-200-01.
b. Concrete construction must be in accordance with ACI 301.
c. Refer to Performance Verification Testing for Cast-in-place field quality control.
d. Concrete construction tolerances must be in accordance with ACI 117.
e. Design for watertight joints, or weeping joints having back-up water penetration protection in precast elements. Minimize cracking potential of precast concrete elements by implementing expansion and control joints in the precast assembly.
f. Joints must include properly sized and placed backing material and fully loaded and tooled sealant joint of no less than 1/4 inch sealant material thickness.
g. Provide a water resistive barrier to protect back-up wall assembly.

B201003 INSULATION AND EXTERIOR ENCLOSURE BARRIERS

Provide insulation, air barriers, water resistive barriers, and moisture barrier/ vapor retarders (if required) in the exterior enclosure to control heat loss/gain, air infiltration/diffusion, moisture infiltration/diffusion, and water infiltration. These barriers can be accomplished by insulation, liquid application, applied sheet materials, or applied membranes.

Provide insulation, air barrier and water resistive barrier on all conditioned facilities and moisture barrier/ vapor retarders when required by the exterior enclosure vapor pressure and hygrothermal analysis. These barrier materials may be installed separately or combined if different air barrier, moisture barrier/ vapor retarder, and water resistive barrier functions can be consolidated in one material.

Provide exterior enclosure barriers that are durable and designed to last the life of the facility. Seal the continuous air and water resistive barrier in a flexible manner to allow for relative movement of adjacent building enclosure components. Support exterior enclosure barriers to withstand maximum positive and negative air pressure to be placed on the building without displacement or damage and transfer the load to the structure. Permanently seal penetrations, joints, holes, and transitions to adjoining construction in air and water resistive barriers as recommended by the material manufacturer. Do not compromise exterior enclosure barrier integrity at electrical boxes, fixture supports, and fasteners with holes through the exterior enclosure barriers that allow air or water leakage. Do not expose exterior enclosure barriers or retarders to environment conditions longer than is recommended by the manufacturer.

B201003 1.1 INSULATION SYSTEMS

Vertical and horizontal polystyrene insulation conforming to ASTM C578 or rigid polyisocyanurate board wall insulating products conforming to ASTM C591 or mineral-fiber blanket insulation conforming to ASTM C 665 must be provided. Wall insulating product must have a minimum R-value to meet UFC 3-101-01 Architecture and the energy design of the facility. Seal the joints in rigid insulation within cavity/veneer walls for additional moisture and air infiltration protection.

B201003 1.2 AIR BARRIER

The building air barrier is a combination of various construction materials/ components that form a continuous air barrier seal on all six sides of a building. Materials designated as a part of the air barrier must use methods recommended by the manufacture to seal joints and intersections for air-tightness. Individual materials used in the continuous air barrier must have an air permeance not to exceed 0.004 cfm/ft2 at a pressure differential of 0.3 inches water (1.56lb/ft2), (0.02 L/s. m2 at 75 Pa) when tested in accordance with ASTM E 2178. If the air barrier is to be field tested, refer to the requirements in the paragraph entitled "Air Barrier Performance Testing" of this section for entire building minimum air permeance. Air barrier installation at windows must be in accordance with ASTM E 2112.

B201003 1.2.1 Exterior Enclosure Air Barrier Materials

Refer to Air Barrier Association of America (ABAA) to identify qualified materials with the appropriate performance for the air barrier. Utilize materials from the "ABAA Evaluated Air Barrier Materials" found at the following web link; http://www.airbarrier.org/materials/index_e.php

B201003 1.3 WATER RESISTIVE BARRIER

Provide a water resistant barrier to resist bulk water penetration and wind-driven rain that passes the exterior cladding of the facility. Provide vapor permeable water resistant barrier if the water resistive barrier function is combined with other exterior enclosure barrier functions. Integrate water resistive barriers with wall flashing to form a shingled effect and direct water down the outside surface of the water resistive barrier, away from the back-up wall assembly, and out of the wall. Comply with the requirements of ASTM E2256 for mechanical fastened building wrap materials or ICC-ES Acceptance Criteria AC38 for other materials.

B201003 1.3.1 Exterior Enclosure Water Resistive Barrier Materials

Refer to Air Barrier Association of America (ABAA) to identify qualified materials with the appropriate performance for the water resistive barrier. Utilize materials from the "ABAA Evaluated Air Barrier Materials" found at the following web link; http://www.airbarrier.org/resistive/index_e.php

B201003 1.4 MOISTURE BARRIER/ VAPOR RETARDER

Provide a moisture barrier/ vapor retarder to slow or reduce the unintended movement of water vapor in and out of conditioned space, if required by exterior enclosure vapor pressure and hygrothermal analysis. Perform the analysis and provide a moisture barrier/ vapor retarders in accordance with UFC 3-101-01, *Architecture*. Choose the moisture barrier/ vapor retarder permeability as a function of climate, the characteristics of the materials that comprise the assembly, and the interior conditions. If required, install moisture barrier/ vapor retarder materials on the warm side of the building assembly insulation (in the predominate season for the facility climate). Select moisture barrier/ vapor retarders in accordance with ASTM C755.

B201004 PARAPETS

Avoid parapets when possible, but when necessary, provide parapets with the same materials as the exterior wall construction, including framing members, anchors, flashings, cants, and accessories. Parapets must be designed to withstand the lateral loads prevailing at the project site and be provided with thruwall flashing below the parapet cap, at structural members, at penetrations, and at the roof level. Provide flashing and scuppers in accordance with SMACNA.

B201005 EXTERIOR LOUVERS & SCREENS

If required, provide louvers, which are not an integral part of the

mechanical equipment, exterior closures, grilles and screens, storm shutters, and other materials used for a variety of purposes including screening of equipment or as louvers for exterior doors.

Louvers, screens, grilles in must be selected in a color and design that is compatible with the fabric of the exterior architectural character as described below. For frame construction, install in accordance with ASTM E 2112.

B201005 1.1 WALL LOUVERS

Wall louvers must be drainable blade type louver with blade slopes of 45 degrees minimum, but provide wind driven rain rated louvers for wall louvered rooms without a floor drain within the room. Louvers must be made to withstand a wind load of not less than 30 psf (146 Kg/m2), .08 inch (2 mm) thick 6063-T5 or T52 extruded aluminum in a factory-finished color in accordance with AAMA 2605 with a minimum coating thickness of 1.2 mil to match the building facade. Wall louvers must bear the AMCA certified ratings program seal for air performance and water penetration in accordance with AMCA 500 , 500L (wind driven rain), and AMCA 511. Provide sill flashing with sloped drain pan at base of louver to collect moisture that migrates down the interior face of the louver. This sill flashing must drain water to the outside of the building. Louvers must have bird screens.

B201005 1.2 SCREENED EQUIPMENT ENCLOSURE

Design and fabricate support frames to withstand wind loads. Anchor frames securely in place. Provide secondary horizontal steel or aluminum framing for attachment of screen materials. Screen material must be factory finished coating in accordance with AAMA 2605 with a minimum coating thickness of 1.2 mils. Formed metal panels from galvanized steel sheet per ASTM A 653 or aluminum sheet per ASTM B 209.

B201005 1.3 STORM SHUTTERS

B201005 1.3.1 Roll Shutters

Roll shutters must have factory finished 0.050 inch (1.27 mm), 6063-T5/T6 aluminum slats with continuous over-head housing, frame and tracks. Roll shutter must be capable of being locked in a closed position by a non-key device.

B201005 1.3.2 Accordion Shutters

Accordion shutters must have factory-finished aluminum alloy 6063-T5/T6 slats and tracks. Accordion shutter must have stainless steel wheel carriers, nylon wheels and guides with stainless steel fasteners and be capable of being locked in a closed position by a non-key device.

B201005 1.3.3 Hinged Louvered Shutters

Hinged louvered shutters must have factory finished 0.50 inch (13 mm), 6063-T5/T6 aluminum louvered blades and frames with stainless steel hinges, holders, and fasteners. Allow minimum

space between horizontal louver blades. Provide storm bar where required due to the lateral loads imposed on the shutter.

B201005 1.3.4 Removable Shutters

Removable shutters must have formed factory finished 0.050 inch (1.27 mm), 3003-H16 aluminum panels and continuous 6063-T5/T6 header and base frame with stainless steel fasteners or spring tempered stainless steel clips.

B201005 1.3.5 Exterior Door Louvers

If allowed by UFC 4-010-01, louvers for exterior doors must be inverted "Y" type with minimum of 30 percent net-free opening. Weld or tenon louver blades to continuous channel frame and weld assembly to door to form watertight assembly. Form louvers of hot-dip galvanized steel of same gage as door facings. Louvers must have steel-framed insect screens secured to room side and readily removable. Louvers must have aluminum wire cloth, 18 by 18 or 18 by 16 inch mesh, for insect screens. Net-free louver area to be before screening.

B201006 BALCONY WALLS & HANDRAILS

B201006 1.1 PRECAST CONCRETE BALCONY WALLS

Precast concrete balcony walls must be in accordance with section B201001 EXTERIOR CLOSURE paragraph titled, "Precast Concrete Wall Panels."

B201006 1.2 UNIT MASONRY BALCONY WALLS

B201006 1.2.1 Clay Masonry Units

Clay masonry balcony walls must be in accordance with section B201001 EXTERIOR CLOSURE, paragraph titled, "Face Brick."

B201006 1.2.2 Concrete Masonry Units

Concrete masonry balcony walls must be in accordance with section B201001 EXTERIOR CLOSURE, paragraph titled, "Unit Masonry."

B201006 1.3 METAL FRAMED ASSEMBLY BALCONY WALLS

Metal framed assembly balcony walls must be in accordance with section B201001 EXTERIOR CLOSURE, paragraph titled, "Load Bearing Metal Framing System."

B201006 1.4 WOOD FRAMED ASSEMBLY BALCONY

Wood framed assembly balcony walls must be in accordance with section B201001 EXTERIOR CLOSURE, paragraph titled, "Wood Framing System."

B201006 1.5 HANDRAILS

Design handrails and anchorage connections to resist loads in

accordance with IBC. Provide materials in accordance with NAAMM PR, with the same size handrail and vertical post. Provide series 300 stainless steel pipe collars. Factory coat all metal railings, except ornamental metals such as brass, bronze, and nickel-silver, with a high performance coating in accordance with AAMA 2605 with a minimum coating thickness of 1.2 mils unless otherwise noted.

B201006 1.5.1 Steel Handrails

Steel handrails, including inserts in concrete, steel pipe conforming to ASTM A 53 or structural tubing conforming to ASTM A 500, Grade A or B of equivalent strength must be provided. Steel railings must be of 1 1/2 inches (38 mm) nominal size. Railings must be hot-dip galvanized, shop primed shop painted for exterior applications.

B201006 1.5.2 Aluminum Handrails

Aluminum railing must be of 1-1/2 inch (38 mm) nominal schedule 40 pipe conforming to ASTM B 429 or 1-3/4 inch (44 mm) square aluminum semi-hollow tube with rounded corners conforming to ASTM B 221. Railings must be coated with a high performance coating or anodized in accordance with AAMA 611, Class I. All fasteners must be Series 300 stainless steel.

B201006 1.5.3 Wood Handrails

Wood handrails must be of pre-finished natural hardwood in oak, walnut, or ash. Wood must be coated with hard acrylic finish to withstand indentations.

B201007 EXTERIOR SOFFITS

Exterior soffit system assemblies must include trim and necessary accessories including high performance coatings, if required. Installation must be crisp, fit and trim with tight joinery to back-up framing. Soffits must be designed to be field assembled by lapping side edges of adjacent panels and mechanically attaching through panels to galvanized, non-load bearing framing conforming to ASTM A 653 (G60) and ASTM C 645, using concealed fasteners. Provide trim accessories of the same material and finish as the soffit material where soffit abuts other materials.

Use adequate backing material to assure snug joints and even face planes. Where soffits ventilate an attic space, or an otherwise unventilated space, provide a soffit/ridge/louver/ventilator ventilation system with air quantities complying to the IBC. For spaces intentionally not vented, provide sealed soffits to maintain the integrity of the air barrier and insulation barrier.

B201007 1.1 METAL SOFFIT PANELS

Metal soffit panels must be factory-formed and factory-finished. Use factory-applied sealant in side laps.

B201007 1.2 VINYL SOFFIT SYSTEM

If required, provide integrally colored vinyl soffit complying with ASTM D 4477.

B201007 1.3 EXTERIOR GYPSUM BOARD SYSTEM

Exterior gypsum wall board soffit system must be tapered edge 5/8 inch (16 mm) thick, 48 inch (1.2 meter) wide exterior gypsum board panels conforming to ASTM C 931 and ASTM C 840, mechanically attached to galvanized non-load bearing framing conforming to ASTM A 653, G60 and ASTM C 754. Tape and finish gypsum board joints in accordance with ASTM C840. Soffit design must assure that the gypsum soffit material does not have direct water contact.

B201008 WALL FLASHING

Flashing must be aluminum or stainless steel or copper. Aluminum must conform to ASTM B 209/B 209M, 0.040 inches (1.27 mm) thick and must be coated to match the item flashed. Stainless steel must conform to ASTM A 167, type 302 or 304, 2D finish, fully annealed, dead soft temper. Thickness must be a minimum of 0.018 inches (0.4572 mm). Copper must conform to ASTM B 370, cold rolled temper. Thickness of copper must be 20 ounces per square foot (6.125 Kg/m2). Incorporate the flashing in the water resistive barrier and seal joints to flashing to form a shingled effect and direct liquid water to the exterior of the exterior enclosure and away from back-up wall assembly.

B201009 EXTERIOR PAINTING AND SPECIAL COATINGS

Apply coatings directly to all non-prefinished surfaces of the exterior construction. Comply with Master Painters Institute requirements for surface degradation analysis, surface preparation, paint and coating selection, paint application restrictions for substrate materials, and paint application.

B201009 1.1 GENERAL REQUIREMENTS

Painting practices must comply with applicable federal, state and local laws enacted to insure compliance with Federal Clean Air Standards. Apply coating materials in accordance with SSPC PA 1. SSPC PA 1 methods are applicable to all substrates.

All paint must be in accordance with the Master Painter Institute (MPI) standards for the exterior architectural surface being finished. The current MPI, "Approved Product List" which lists paint by brand, label, product name and product code as of the date of contract award, will be used to determine compliance with the submittal requirements of this specification. The Contractor may choose to use a more current MPI "Approved Product List"; however, only one list may be used for the entire contract. All coats on a particular substrate, or a paint system, must be from a single manufacturer. No variation from the MPI Approved Products List is acceptable.

Select paint systems for the project in accordance with the MPI Architectural Painting Decision Tree available on the Whole Building Design Guide. Use this interactive MPI Decision Tree website to identify applicable paint system(s) for the project. The MPI Decision

Tree identifies paint systems for each interior or exterior coated surface in "Normal" or "Aggressive" environmental conditions and generally lists the applicable paint systems in descending order of performance. The paint system at the top of each substrate list generally indicates the highest performing acceptable coating system.

Choose the "Aggressive" environmental conditions in the MPI Decision Tree for exterior systems that are used in moist humid conditions, abrasive conditions, chemical exposure conditions, or within five miles proximity of the ocean or a body of water. Also use "Aggressive " environmental conditions in interior spaces that are exposed to in moist humid conditions, abrasive conditions, chemical exposure conditions, such as bathrooms, shower rooms, kitchens, chemical storage area, swimming pools, laundry, sanitary areas, commercial kitchens, industrial production areas, and hospital operating rooms provide paint systems that comply with the MPI Decision Tree "Aggressive" environmental conditions.

Comply with the following requirements when determining the appropriate paint or coating system from the MPI Decision Tree:

a. Some of these paint systems are identified with a "NAVFAC Anchor". This "NAVFAC Anchor" indicates the minimum performing system that NAVFAC will accept for that substrate and environmental conditions.

b. When multiple "NAVFAC Anchors" are indicated on a certain substrate and environmental condition, provide the "NAVFAC Anchor" paint or coating system that is most appropriate for the facility use.

c. If only one MPI Decision Tree choice is available for a certain substrate and environmental condition with no indicated NAVFAC preference, provide that sole option for NAVFAC projects.

d. If the MPI Decision Tree provides multiple choices and no NAVFAC preference is denoted, refer to the Additional RFP Requirements below to determine level of performance.

e. If the MPI Decision Tree does not identify all paint system applicable to the facility, utilize the *MPI Architectural Painting, Exterior Systems Manual* to identify other appropriate paint systems for the project. Utilize the "Premium Grade" systems and comply with all limitations stated in the MPI "Approved Product List" for each paint product. Products having an MPI VOC Range E3 must be given preferential consideration over lower VOC Ranges. Use higher performing paint systems unless the lower performing paint system can be justified based on a lifecycle cost to include surface preparation, application, disposal, environmental impact, and required recoating cycles. Only use paint products that have been tested for MPI'S "DETAILED PERFORMANCE" or "EVALUATED PERFORMANCE ". Do not use products that have only been tested for "INTENDED USE".

f. If an "Aggressive" environmental condition option is not available in the MPI Decision Tree for a certain substrate, use the "Normal" environmental condition option.

g. Refer to the Additional Exterior Paint and Coating System Requirements below for further system requirements.

Paints and coatings must comply with Master Painters Institute Green Performance Standard GPS-1-12 which is available at the following website; http://www.specifygreen.com/EvrPerf/EnvironmentalPerformance.html . Choose paints that provide performance, are environmentally friendly, and that conform to EPA or local environmental regulations, whichever requires the lowest VOC content.

B201009 1.1.1 MPI Gloss Levels

Gloss levels must comply with the MPI system of determining gloss as defined in the Evaluation sections of the MPI Manuals. Utilize the performance characteristics of the paint gloss and sheen to categorize paint rather than manufacturers' description of the product. The MPI Gloss Levels are indicated by the notation G1, G2, G3, G4, G5, G6, or G7. Navy only uses MPI Gloss Levels G2, G3, G5, G6.

The MPI Decision Tree indicates a default gloss level for each paint system, however consider the appearance, anticipated conditions, and need for cleaning when establishing the final gloss level for each coated surface of the project. Comply with the following guidance in choosing the appropriate gloss level.

a. Use G2 "Velvet-like" Flat for ceilings, residential walls away from human contact and low traffic areas.

b. Use G3 "Eggshell-like" in high traffic areas for ceilings and walls, when human contact with the wall is limited, and for dark accent colors.

c. Use G5 Semigloss for walls, doors and trim for high durability and clean ability and when a surface is expected to have routine human contact.

d. Use G6 Gloss only in special situations such as for piping identification or special effects.

The MPI gloss and sheen standard values are per ASTM D523, and are as follows:

Gloss Level Number	Gloss@60 Degrees	Sheen@85 Degrees
Gloss Level 1(G1)–Matte or Flat	Max.5 units	Max.10 units
Gloss Level 2(G2)–"Velvet-like" Flat	Max. 10 units	10-35 units
Gloss Level 3(G3)–"Eggshell-like"	Max. 10-25 units	10-35 units
Gloss Level 4(G4)-"Satin-like	Max. 20-35 units	Min. 35 units
Gloss Level 5(G5)-Semi-Gloss	35-70 units	
Gloss Level 6(G6)–Gloss	70-85 units	

Gloss Level 7(G7)–High Gloss More than 85 units

B201009 1.1.2 MPI System Designations and Table Abbreviations

The MPI coating system number description is found in either the *MPI Architectural Painting Specification Manual*or the *Maintenance Repainting Manual*and defined as an exterior system

a. EXT - MPI short-term designation for an exterior coating system on a new surface.
b. REX - the MPI short term designation for an exterior coating system used in repainting projects or over existing coating systems.
c. DSD - the MPI short-term designation for Degree of Surface Degradation as defined in the Assessment sections in the *MPI Maintenance Repainting Manual*. Degree of Surface Degradation designates the MPI Standard for description and appearance of existing condition of surfaces to be painted. This DSD classification is used to determine the proper surface preparation necessary for painting.

B201009 1.1.3 Surface Preparation

Comply with the "Exterior Surface Preparation" section of the *MPI Architectural Painting Specification Manual*or the Exterior Surface Preparation” section of the *MPI Maintenance Repainting Manual*. All suggestive language such as "may" or "should" are deleted from the standard and "must" inserted in its place. Suggestive language such as "recommended" or "advisable" is deleted from the standard and "require" or "required" inserted in its place. The results of these wording substitutions change this document to required procedures. For surface preparation, determine a MPI DSD Assessment of each surface and comply with the MPI Surface Preparation Requirements relating to the assessments. Not withstanding MPI requirements, clean exterior ferrous metal that is exposed to weather conditions (wind, precipitation, solar degradation, and humidity) to a SSPC SP 10 level (near white).

Remove dirt, splinters, loose particles, grease, oil, and other foreign matter and substances deleterious to coating performance as specified for each substrate before application of paint or surface treatments. For existing buildings, use MPI *Maintenance Repainting Manual* to determine the coatings that need to be removed. Remove deteriorated or loose coatings before repainting begins. Oil and grease must be removed prior to mechanical cleaning. Cleaning must be programmed so that dust and other contaminants will not fall on wet, newly painted surfaces. Exposed ferrous metals such as nail heads on or in contact with surfaces to be painted with water-thinned paints, must be spot-primed with a suitable corrosion-inhibitive primer capable of preventing flash rusting and compatible with the coating specified for the adjacent areas.

B201009 1.2 ADDITIONAL EXTERIOR PAINT AND COATING SYSTEM REQUIREMENTS

In addition to the MPI Decision Tree, comply with the following paint system requirements:

B201009 1.2.1 Pavement Coatings

a. EXT 3.2 Concrete Horizontal Surfaces

Normal/ Aggressive Condition; Pigmented;

Provide road and parking lot pavement marking in accordance with UFGS 32 17 23.00 20, *Pavement Markings.*

b. EXT 10.2 Bituminous Coated Surfaces

Normal/ Aggressive Condition; Pigmented;

Provide road and parking lot pavement marking in accordance with UFGS 32 17 23.00 20, *Pavement Markings.*

B201009 1.2.2 Hot Metal Surfaces (including smokestacks),

a. EXT 5.2 Hot Metal, Up to 205 degrees C 400 degrees F

Normal/ Aggressive Condition; Pigmanted

(1) EXT 5.2A - Heat Resistant Enamel

Primer: Intermediate/ Topcoat:

MPI 21 Surface Preparation and numbers of coats per manufacturers' instructions.

b. EXT 5.2 Hot Metal (Ferrous), Up to 400 degree C, 750 degree F

Normal/ Aggressive Condition; Pigmented;

(1) 5.2C - Heat resistant - inorganic zinc coating

Primer: Intermediate/ Topcoat:

MPI 19 Surface Preparation and numbers of coats per manufacturers' instructions.

(2) 5.2B - Heat resistant - aluminum finish enamel

Primer: Intermediate/ Topcoat:

MPI 2 Surface Preparation and numbers of coats per manufacturers' instructions.

c. EXT 5.2 Hot Metal (Non-Ferrous), Up to 593 degree C, 1100 degree F

Normal/ Aggressive Condition; Pigmented

(1) 5.2D - Heat Resistant Coating

New and existing surfaces cleaned bare to SSPC SP 10/NACE No. 2

Primer: Intermediate/ Topcoat:

MPI 22 Surface Preparation and numbers of coats per manufacturers' instructions.

B201010 EXTERIOR JOINT SEALANT

Sealant joint design, priming, tooling, masking, cleaning and application must be in accordance with the general requirements of *Sealants: A Professionals' Guide*from the Sealant, Waterproofing & Restoration Institute (SWRI). All sealant must conform to ASTM C 920.

Joints must include proper backing material for sealant support during application, control of sealant depth, and to act as a bond breaker. Use filler boards, backer rods and bond breaker tapes. Provide priming unless specifically not recommended by the sealant manufacturer. Applied sealant must be tooled. Tooling must not compact sealant too less than the minimum sealant thickness required. Mask adjacent surfaces to control sealant boundaries during sealant application.

B201011 SUN CONTROL DEVICES (EXTERIOR)

Sun control devices must be manufactured devices to provide sun control on exterior windows and storefronts. Sun control devices must be designed and installed to withstand the wind loads prevailing at the project site.

B201011 1.1 EXTERIOR SUN SCREENS

Exterior sun screens must be of aluminum with 6063-T5/T6 aluminum demountable frame attachment. Screen material must be formed factory finished metal from aluminum sheet per ASTM B 209. Screen material must be factory finished coating in accordance with AAMA 2605 with a minimum coating thickness of 1.2 mils. Sunscreen must be awning, fin or other type appropriate to the installation.

B201012 SCREEN WALL

Screen walls include attached or unattached walls adjacent to the main building. Screen walls must conform to the applicable portions of Section B201001 EXTERIOR CLOSURE.

B201090 OTHER EXTERIOR WALLS

B2020 EXTERIOR WINDOWS

Standard windows must be in compliance with ANSI/AAMA/WDMA 101, SWI SWS, UFC 4-010-01, and the design criteria of ASCE 7 for glazed windows to meet the Building Code.

If required, provide windows that meet the requirements of AAMA/WDMA 101/I.S.2. Residential construction must utilize windows that comply with AAMA LC-25 designation unless the wind pressure on the building exceeds 38

psf (185 Kg/m2). Commercial (non-residential) construction must utilize windows that comply with AAMA designation HC-40 (60 psf - 293 Kg/m2) for windows that do not have to meet anti-terrorism requirements, and HC-60 (90 psf - 439 Kg/m2) for commercial windows that are required to meet anti-terrorism requirements, unless the wind pressure or blast pressure on the building exceeds the design pressure for these minimum windows. Determine the wind pressure on the building by converting the ASCE-7 basic wind speed to wind pressure and find the corresponding structural test pressure in the AAMA specific requirements or optional performance tables. If the residential window wind pressure exceeds of 38 psf (185 Kg/m2) or the commercial (non-residential) window wind pressure exceeds 60 psf (293 Kg/m2) or exceeds 90 psf (439 Kg/m2), utilize a higher AAMA designated window complying with the calculated wind pressure. Anti- Terrorism window systems (including connections) must meet the testing requirements of UFC 4-010-01 when tested in accordance with ASTM F1642.

Comply with ASTM E 2112 and with flashing and weather-resistive barrier manufacturers’ recommendations to install windows in framed wall construction. Comply with window flashing details from BIA for masonry back-up and veneer walls. Engineer and install window cleaning access and anchorage to the exterior wall for facilities over three stories tall without interior window cleaning access from pivoting or tilting sash. Provide anchors in accordance with OSHA standard 29 CFR Section 1910.66.

Windows must be provided with sills on the exterior and stools on the interior of the opening. Sills must be special shape or cut unit masonry or precast concrete in masonry exterior construction and extruded aluminum or aluminum-wrapped wood framing or formed metal in other construction. Positively slope sills away from windows. Window stools must be slate or solid polymer for commercial construction and painted wood for residential construction.

B202001 WINDOWS

Exterior windows must consist of fixed and operable sash used singly and in multiples. Provide operable sash in spaces occupied by people as a minimum. Include operating hardware, non-corroding framed metal screens for operable sash, integrated blinds set between glass panels and security grilles. Provide jamb support for larger windows where recommended by manufacturer. Metal windows with insulating glass must have thermally broken frames and sash. Provide thermally broken windows and window assemblies where separating conditioned and unconditioned spaces. Provide windows and window assemblies that bear an NFRC energy performance label and meet or exceed current EnergyStar requirements.

Provide glazing in exterior windows in accordance with section B202004 EXTERIOR GLAZING.

B202001 1.1 STANDARD WINDOW SYSTEMS

B202001 1.1.1 Steel Windows

Conform to SWI SWS. Solid hot-rolled steel shape welded frames and mullions. Provide chemically cleaned and primed galvanized frames with polysteel powder coat finish. Provide glazing beads, steel frame screens with aluminum mesh at operable sashes,

hardware and locks, and tinted glazing. Aluminum screens must comply with ANSI/SMA 1004.

B202001 1.1.2 Aluminum Windows

Conform to ANSI/AAMA/WDMA 101. Factory finish aluminum windows and provide with aluminum frame screens with aluminum mesh at operable sash, hardware and locks, and tinted glazing. Aluminum screens must comply with ANSI/SMA 1004.

Exposed aluminum surfaces must be factory finished with an AA 45 anodic coating or an AAMA organic coating. Provide a minimum of architectural Class II anodized coating or a baked enamel finish conforming to AAMA 2604 for residential construction. Provide a minimum of architectural Class I anodized coating or a high-performance organic coating conforming to AAMA 2605 for non-residential (commercial) construction. AAMA coatings must have a total dry film thickness of 1.2 mils.

B202001 1.1.3 Security Windows

Security windows delay forced entry into the building through the windows. In addition to meeting the requirements of AAMA 101, windows designated "resistance to forced entry" must conform to the requirements of AAMA 1302.

B202001 1.1.4 Plastic Windows, Factory Finish

Provide integral colored or co-extruded color PVC, welded and reinforced corners, reinforcing members, fasteners, hardware, weatherstripping, welded sill, and anchors conforming to ANSI/AAMA/WDMA 101 or ASTM D 4099. The exterior grade polyvinyl chloride extrusion must comply with AAMA 303 and ASTM 4726.

B202001 1.1.5 Wood Windows

Wood windows must consist of complete units including sash, glass, frame, weatherstripping, insect screen, and hardware. Window units must meet the requirements of AAMA 101, except maximum air infiltration must not exceed 0.30 CFM per linear foot of sash crack when tested under uniform static air pressure difference of 1.57 psf (7.66 Kg/m2). Glass and glazing materials must conform to section B202004, EXTERIOR GLAZING. Insect screen must meet ASTM D 3656, Class 2, 18 by 14 mesh, color charcoal. Aluminum screen frames must meet SMA 1004.

a. Finish

1) Vinyl (PVC) Cladding: Preservative treat all basic wood frame and sash members in accordance with WDMA I.S.4, except do not use pentachlorophenol. Clad all exterior surfaces with rigid polyvinyl sheathing, complying with ASTM D 1784, class 14344-C, not less than 35 mil average thickness.

2) Aluminum Cladding: Preservative treat all basic wood

frame and sash members in accordance with WDMA I.S.4, except do not use pentachlorophenol. Clad all exterior surfaces with roll formed aluminum with joints sealed during assembly. Aluminum clad frames and sash must meet performance requirements of AAMA 101. Aluminum finish must be an organic coating of an AAMA 2604 coating for residential construction and AAMA 2605 for non-residential (commercial) construction with a minimum dry film thickness of 1.2 mils.

B202002 STOREFRONTS

Provide one-story storefront system fabricated from formed and extruded aluminum and glass components for exterior use.

B202002 1.1 ALUMINUM-FRAMED STOREFRONTS

B202002 1.1.1 Performance Requirements

a. Structural Requirements, as measured in accordance with ANSI/ASTM E330: Wind loads for exterior assemblies must meet or exceed 25 psf (122 Kg/m2) acting inward and 25 psf (122 Kg/m2) acting outward. Design system to withstand this as a minimum and comply with design pressure established within the required ASCE 7-05 Wind Speed Calculations determined by the overall average opening within the project.

b. Deflection: Maximum calculated deflection of any framing member in direction normal to plane of wall when subjected to specified design pressures for spans up to and including 13’-6" must be limited to 1/175 of its clear span and for spans greater than 13’-6" deflection must be limited to 1/240 + 1/4" of its clear span, except that maximum deflection of members supporting plaster surfaces must not exceed 1/360 of its span.

c. Air Infiltration - Air leakage through fixed light areas of storefront must not exceed 0.06 cfm per square foot of surface area when tested in accordance with ASTM E283 at differential static pressure of 6.24 psf (33.84 Kg/m2).

d. Water Penetration - When tested in accordance with ASTM E 331, there must be no water penetration at a pressure of 15 psf (73 Kg/m2) of fixed area.

e. Water infiltration No uncontrolled leakage when tested in accordance with ASTM E331 at test pressure of 10 psf (48 Kg/m2) for system standard and capable of performing within the Design Pressure requirements derived from the ASCE 7-05 requirements.

f. Provide storefront framing and glazing assembly with an overall thermal transmittance value of not more than 0.40 BTU/hr x ft2 x deg F as determined according to NFRC 100.

B202002 1.1.2 Doors And Frames

Provide doors complete with frames, framing members, subframes,

transoms, adjoining sidelights, adjoining window wall, trim, and accessories, as required for a complete installation. Anchors must be stainless steel. Weatherstripping must be Continuous wool pile, silicone treated, or type recommended by door manufacturer. See B203008, EXTERIOR DOOR HARDWARE for hardware requirements.

B202002 1.1.3 Aluminum Alloy for Doors and Frames

ASTM B 221, Alloy 6063-T6 for extrusions. ASTM B 209, alloy and temper best suited for aluminum sheets and strips.

B202002 1.1.4 Fabrication

a. Aluminum Frames: Provide removable glass stops and glazing beads for frames accommodating fixed glass. Use countersunk stainless steel Phillips screws for exposed fastenings, and space not more than 12 inches (300 mm) o.c.. Mill joints in frame members to a hairline fit, reinforce, and secure mechanically.
b. Aluminum Doors: Doors must be medium or wide stile. Doors must be not less than 1-3/4 inches (44 mm) thick. Minimum wall thickness, 0.125 inch (3.175 mm), except beads and trim, 0.050 inch (1.27 mm). Bevel single-acting doors at lock, hinge, and meeting stile edges. Double-acting doors must have rounded edges at hinge stile, lock stile, and meeting stile edges.
c. Finishes: Provide exposed aluminum surfaces with factory finish of anodic coating conforming to AA45, Architectural Class I or an organic coating conforming to AAMA 2605 with a total dry film thickness of not less than 1.2 mils.

B202003 CURTAIN WALLS

B202003 1.1 GLAZED CURTAIN WALL SYSTEM REQUIREMENTS

Provide system complete with framing, mullions, trim, panels, windows, glass, glazing, sealants, insulation, fasteners, anchors, accessories, concealed auxiliary members, and attachment devices for securing the wall to the structure as specified.

Fully coordinate system accessories directly incorporated and adjacent to related work and insure materials compatibility, deflection limitations, thermal movements, and clearances and tolerances as specified. Design and test in accordance with *AAMA Curtain Wall Manual*.

Provide thermally broken curtain wall framing and infill glazing and panels where separating conditioned and unconditioned spaces.

B202003 1.1.1 Source

Curtain wall system components must be furnished by one manufacturer or fabricator; however, all components need not be products of the same manufacturer.

B202003 1.1.2 Cleaning Provisions

For curtain wall systems over two stories in height reinforce curtain wall members and provide support for cleaning rigs. The support for cleaning rigs may be provided by other elements of the facility.

B202003 1.1.3 Warranty

a. System Warranty – Manufacturer of the curtain wall system must be warrant that the design, construction, and materials installed in the system must be free of manufacturer's defects for the life of the installation. The manufacturer must provide a similar warranty for the individual components of the system that are provided by other, outside manufacturers. Execute the warranty for the system directly to the Government.
b. Additional Glass Warranty – Insulating glass units must be guaranteed not to develop material obstruction of vision as a result of dust or film formation on the inner glass surface caused by failure of the seal, other than through glass breakage, within a period of 5 years from date of acceptance of work by the Government. Units failing to comply with the terms of this guarantee must be replaced with new units without additional cost to the Government. The Contractor must require the manufacturer to execute their warranties in writing directly to the Government.

B202003 1.1.4 Design

a. Structural Requirements, as measured in accordance with ANSI/ASTM E330:

1) Wind loads for exterior assemblies: Provide systems capable of performing at a minimum C acting inward and 25 psf (122 Kg/m2) acting outward. Design system to withstand this as a minimum and comply with design pressure established within the required ASCE 7-05 Wind Speed Calculations determined by the overall average opening within the project.

2) Deflection: Maximum calculated deflection of any framing member in direction normal to plane of wall when subjected to specified design pressures for spans up to and including 13'-6" must be limited to 1/175 of its clear span and for spans greater than 13'-6" deflection must be limited to 1/240 + 1/4" of its clear span, except that maximum deflection of members supporting plaster surfaces must not exceed 1/360 of its span.

3) Water Penetration/Water infiltration - No uncontrolled leakage when tested in accordance with ASTM E331 at test pressure of 10 psf (48.6 Kg/m2) for system standard and capable of performing within the Design Pressure requirements derived from the ASCE 7-05 requirements.

4) Air Infiltration - Air leakage through fixed light

areas of storefront must not exceed 0.06 cfm per square foot of surface area when tested in accordance with ASTM E283 at differential static pressure of 26.24 psf (30.32 Kg/m2).

b. Delamination: Adhesively bonded metal-faced or glass faced panels must show no evidence of delamination, warpage or other deterioration or damage when subjected to the six "Accelerated Aging Cycles" specified in ASTM D 1037.

c. Thermal Conductance: The thermal transmittance of opaque panels must not exceed the specified U-value, when tested in accordance with ASTM C 236. The average calculated thermal transmittance of the complete wall assembly including panels, windows, and all other components must not exceed a U-value necessary to meet the energy budget of the facility. Determine U-values of components in accordance with ASTM C 236.

d. Window Tests: Windows must meet the requirements specified herein. Windows must meet the same requirements for deflection and structural adequacy as specified for framing members when tested in accordance with ASTM E 330 except permanent deformation must not exceed 0.4 percent; there must be no glass breakage, and no permanent damage to fasteners, anchors, hardware, or operating devices. Windows must have no water penetration when tested in accordance with ASTM E 331.

e. Fire Resistance Tests: Insulation provided in the curtain wall system or field applied in conjunction with the curtain wall system must have a flame spread rating not exceeding 75 and a smoke developed rating not exceeding 150 when tested in accordance with ASTM E 84, except as specified otherwise herein.

1) Insulation: Insulation contained entirely within panel assemblies which meet the flame spread and smoke developed ratings of 75 and 150 respectively. Insulation isolated from the building interior by masonry walls, masonry cavity walls, or encased in masonry cores is not required to comply with the flame spread and smoke developed ratings specified.

2) Curtain Wall Systems: Material for firestopping the opening between the edge of the floor slab and back of the curtain wall system, must have not less than the flame spread and smoke developed ratings specified for insulation which is neither isolated from the building interior nor encased in masonry cores.

3) Curtain Wall Panels: Panels for fire resistive curtain walls must have the required fire resistive rating when tested in accordance with ASTM E 119.

4) Firestopping Materials and Devices: Firestopping material and attachment devices must be an effective barrier against the spread of fire, smoke, and gases for the required period of when exposed to the conditions of the standard ASTM E 119 time-temperature curve for a period equivalent to the fire rating of the floor system and must

also be rated noncombustible when tested in accordance with ASTM E 136.

B202003 1.1.5 Tolerances

Design and erect wall system to accommodate tolerances in building frame and other contiguous work. Provide with the following tolerances:

a. Maximum variation from plane or location shown on DOR-approved shop drawings: 1/8 inch (3 mm) per 12 feet (3.7 meters) of length up to not more than 1/2 inch (13 mm) in any total length.
b. Maximum offset from true alignment between two identical members abutting end to end in line: 1/16 inch (1.6 mm).

B202003 1.1.6 Structural Requirements

Deflection and Structural Tests: No curtain wall framing member must deflect, in a direction normal to the plane of the wall, more than 1/175 of its clear span or 3/4 inch (20 mm), whichever is less, when tested in accordance with ASTM E 330, except that when a plastered or gypsum board surface will be affected the deflection must not exceed 1/360 of the span. No framing member must have a permanent deformation in excess of 0.2 percent of its clear span when tested in accordance with ASTM E 330 for a minimum test period of 10 seconds at 1.5 times the design wind pressures specified.

B202003 1.1.7 Thermal Movement

Fabricate, assemble, and erect system with adequate allowances for expansion and contraction of components and fastenings to prevent buckling damage, joint seal failure, glass breakage, undue stress on fastenings or other detrimental effects.

B202003 1.1.8 Curtain Wall Components

The curtain wall and the components listed below must be designed to meet the performance requirements below.

a. Framing Members in Curtain Wall Main Frames and Sash or Ventilator Members: extrusion strength must meet or exceed the physical properties required for minimum ultimate tensile yield strength of 16,000 psi (110 MPa) when tested under AA ASDI, ASTM E34, and ASTM B221M (or ASTM B221).
b. Joint and Glazing Sealants: Perform tests as required by ASTM C 920.
c. Preformed Compression Gaskets and Seals: ASTM C 864.
d. Preformed Lock-strip Gaskets: ASTM C 542, modified as follows: Heat age specimens seven days at 158 degrees F (70 degrees C), in zipped or locked position under full design compression. Unzip, cool for one hour, re-zip, and test lip seal pressure, which must be minimum 2.5 pounds per linear inch on any extruded or corner specimen.
e. Spandrel Glass: Fallout resistance test, ASTM C 1048.

f. Porcelain Enamel: Acid resistance, color retention, and spall resistance tests, PEI 1001.

g. Anodized Finishes: Aluminum used for framing must have a color anodized NAAMM MFM finish designation AA-MIO-C22-A34 and AA-MIO-C22-A44, meeting the requirements of AAMA 611.

h. Glass and Glazing:

1) Conform to paragraph B202004, GLAZING.

2) Insulating Glass must meet ASTM E 546 or ASTM E 576 at minus 20 degrees F (minus 29 degrees C), no frost or dew point.

i. Firestopping Material - Mineral fiber manufactured from asbestos-free materials, and conforming to ASTM C 612 or ASTM C 665, meeting fire resistance requirements specified.

j. Screens - ASTM D 3656, Class 2, 18 by 14 mesh, color charcoal.

k. Panels - Unless otherwise indicated, design for installation from outside the building. Provide moisture/ vapor retarder on interior face of insulation. Seal edges of panels with cores of absorptive material to prevent entrance of water and allow venting of the core space to outside air.

1) Metal Facing Panels, Single Thickness - Metal facing panels must be single thickness. Panel facing must be flat sheet or textured type, made of porcelain enamel, aluminum, bronze, stainless steel and, with backside stiffeners or edge flanges spaced as required to meet flatness specified.

2) Adhesively Bonded Panels - Adhesively bonded panels must be sandwich type, metal faced both sides, and bonded to form stable and composite unit. Nonexposed face must be galvanized steel. Exposed face must be porcelain enamel, aluminum, bronze, or stainless steel, with continuous laminated backing or internal stiffening ribs or breaks spaced as required to meet flatness specified.

3) Nonmetallic Panels

a) Panels must be glass-faced on the side that will be exposed to view. Glass must be spandrel glass with ceramic coating on its non-weathering surface and smooth finish on the exposed surface; backing must be adhesively bonded to non-weathering surface.

b) Adhesively bonded insulated panels must be nonmetallic faced, sandwich type, tempered hardboard on exposed face and on non-exposed face. Apply coating of epoxy or polyester followed by application of inert aggregate to exposed face in the factory. Inert aggregate must be natural stone chips.

l. Metal Windows – Conform to ANSI/AAMA/WDMA 101. Provide inside glazing with removable metal glazing beads except for windows with structural glazing. Factory finish aluminum windows and provide with aluminum frame screens with aluminum mesh at operable sash, hardware and locks,

and tinted glazing. Aluminum screens must comply with ANSISMA 1004.

Exposed aluminum surfaces must be factory finished with an AA 45 anodic coating or an AAMA organic coating. Provide a minimum of architectural Class II anodized coating or a baked enamel finish conforming to AAMA 2604 for residential construction. Provide a minimum of architectural Class I anodized coating or a high-performance organic coating conforming to AAMA 2605 for non-residential (commercial) construction. AAMA coatings must have a total dry film thickness of 1.23 mils.

m. Metal Accessories - Provide gravel stops and fascias, flashings, metal sills, metal stools, louvers, venetian blind pockets, and closures. Fabricate accessories of sizes and shapes indicated from similar materials and finish as specified for the wall system.

B202004 EXTERIOR GLAZING

Provide setting and sealing materials, stops and gaskets as recommended by the glass or acrylic sheet manufacturer.

Provide warranty for insulating glass units for a period of 10 years against development of material obstruction to vision (such as dust or film formation on the inner glass surfaces) caused by failure of the hermetic seal, other than through glass breakage. The Contractor must require the glazing warranty for curtain wall glazing to be written directly to the Government.

Provide warranty for polycarbonate sheet glazing for a period of 5-years against breakage, coating delamination, and yellowing.

Glazing thickness indicated in the following paragraphs is the minimum acceptable thickness. Provide thicker glazing if required by the manufacturer for the given application.

B202004 1.1 GLASS

B202004 1.1.1 Clear Glass

Type I, Class 1 (clear), Quality q4 (A).

B202004 1.1.2 Heat-Absorbing Glass

ASTM 1036, Type I, Class 2 (heat absorbing and light reducing), Quality q3 (select), 1/4 inch (6 mm) thick, with a light transmittance of approximately 45 percent and total solar transmittance of not more than 50 percent for 1/4 inch (6 mm) thickness. Use warm color tint for warm color frames and cool color tints for white and gray frames.

B202004 1.1.3 Wire Glass

Type II, Class 1, Form 1, Quality q8 Mesh m1 or Form 2, Quality q7, Finish f1, Mesh m1, 1/4 inch (6 mm) thick. Conform to NFPA 80. Glass for fire-rated windows muat be UL listed and must be

rated when tested in accordance with ASTM E 163.

B202004 1.1.4 Laminated Glass

ASTM 1172, fabricated from two pieces of Type I, Class 1, Quality q3 glass laminated together with a clear 0.030 inch (0.75 mm) thick polyvinyl butyral interlayer. The total thickness must be nominally 1/4 inch (6 mm). Laminated glass used for anti-terrorism window assemblies must be a minimum of 1/4 inch (6 mm) thickness.

B202004 1.1.5 Insulating Glass Units

Provide insulated glass using a combination of the interior and exterior glazing materials listed below filled with a thermal resistive gas. The air space must be sized to meet the thermal requirements below but not less than one half inch(12 mm) for non-residential construction and one quarter inch(6 mm) minimum for residential construction.

Provide active solar control glazing by using tinting, maximum thermal resistance, special coatings to meet Energy Star climate zone and window type requirements(including frames), and comply with the performance characteristics below. Provide an active low-emissivity coating on glass surface number 2 (the inside surface of the exterior glass pane).

If the building is located in a heat dominated climate zone, the facility is designed to utilize solar heat gain to augment the HVAC system, and the window overhang design prohibits excessive solar gain; a passive low-emissivity coating may be used to accommodate the design. Occupied spaces adjoining passive low-emissivity coated glass must be designed for comfortable use of the space.

Provide two panes of glass separated by a dehydrated airspace and hermetically sealed. Dimensional tolerances must be as specified in IGMA TR-1200. The units must conform to ASTM E 773 and ASTM E 774, Class A. Provide primary seal, secondary seal, and spacers to eliminate moisture and hydrocarbon vapor transmission into airspace. Warranty insulating glass units against development of material obstruction to vision (such as dust, fogging, or film formation on the inner glass surfaces) caused by failure of the hermetic seal for a 10-year period following acceptance of the work.

The interior glass pane must be one of the following:

1. Typically ASTM C 1036, Type I, Class 1, Quality q4, minimum 1/4 inch (6 mm) thick;
2. ASTM C 1048, Grade B (fully tempered), Style I (uncoated), Type I, Class 1 (transparent), Quality q4, minimum 1/4 inch (6 mm) thick when required by ANSI Z97.1 or possible human impact is anticipated;
3. ASTM C 1172, laminated glass as specified above, when required by antiterrorism requirements.

The exterior glass pane must be one of the following:

1. Typically ASTM C 1036, Type I, Class 2 (tinted heat absorbing or reflective), Quality q4, minimum 1/4 inch (6 mm) thick;
2. ASTM C 1048, Grade B (fully tempered), Style I (uncoated), Type I, Class 2 (tinted heat absorbing or reflective), Quality q4, minimum 1/4 inch (6 mm) thick when required by ANSI Z97.1 or possible human impact is anticipated.

Insulating glass performance for active solar control using low-emissivity coatings:

1. Visible Light Transmission, 66% or lower

2. Outdoor Light Reflectance, 11% or greater

3. Solar Heat Gain Coefficient, .36 or lower

4. Winter U-Value, .35 Btu/square foot x hr x degree F or lower for residential construction and .29 Btu/square foot x hr x degree F or lower for all other types of construction.

B202004 1.1.6 Tempered Glass

ASTM C 1048, Kind FT (fully tempered), Condition A (uncoated), Type I, Class 1 (transparent) or 2 (tinted heat absorbing, Quality q3, 1/4 inch (6 mm) thick.

B202004 1.1.7 Bullet-Resisting Glass

ASTM 1172 and UL 752, fabricated from Type I, Class 1, Quality q3 glass with polyvinyl butyral plastic interlayers between the layers of glass and listed by UL ABPMED as bullet resisting, with a power rating of Medium—Small Arms, High—Small Arms, Super—Small Arms, High—Rifle, or as required by the building program in accordance with UL 752.

B202004 1.1.8 Patterned Glass

ASTM 1036, Type II, Class 1 (translucent), Form 3 (patterned), Quality q7 (decorative), Finish f1 (patterned one side), Pattern p2 (geometric) 7/32 inch (5.55 mm) thick.

B202004 1.1.9 Spandrel Glass

ASTM C 1048, Kind HS or FT, Condition B (ceramic coated), Type I, Quality q5, 1/4 inch (6 mm) thick.

B202004 1.1.10 Spandrel Glass with Adhered Backing

ASTM C 1048, Kind HS or FT, Condition B (ceramic coated), Type I, Quality q5, 1/4 inch (6 mm) thick and must pass the fallout resistance test specified in ASTM C 1048.

B202004 1.2 PLASTIC GLAZING

All plastic glazing exposed to the interior or exterior environment must have an applied hardcoat.

B202004 1.2.1 Bullet-Resistant Plastic Sheet

Provide cast acrylic sheet or mar-resistant polycarbonate sheet laminated with a special interlayer, and listed in UL 752 as bullet resisting, Class I, II, III, clear, or in color.

B202004 1.2.2 Acrylic Sheet Glazing

ASTM D 4802, Type I, regular, Type II, heat resistant, in various thicknesses, clear or colored.

B202004 1.2.3 Polycarbonate Sheet Glazing

ASTM D 3595, ANSI Z97.1, Mar-resistant, Clear and smooth both sides when used for vision glazing; Translucent, textured both sides when used for obscure glazing, tint to match frame, ultraviolet stabilized, thickness to be specified in mm and inches, and listed in UL ABPMED as burglar resisting. Mar-resistant sheet must have a change in haze of between 5 and 8 percent under silica carbide test, 56.44 ounces (1600 grams), ASTM D 673.

B202004 1.3 FRAGMENT RETENTION FILM FOR GLAZING

Existing windows that will not be replaced in the project must have fragment retention film if they require antiterrorism protection. The film must be polyester, polyethylene terephthalate, or a composite. Fragment retention film must be optically clear and free of waves, distortions, impurities, and adhesive lines. The film may be a single layer or laminated. Lamination of the film must only occur at the factory of the fragment retention film manufacturer. The film must include an abrasion resistant coating on the surface that does not receive the film adhesive. Fragment retention film must be a minimum thickness of 0.004 inch (0.1016 mm), or 0.007 inch (0.1778 mm), or 0.010 inch (0.254 mm). The film must be supplied with an optically clear weatherable pressure sensitive adhesive. The adhesive must contain ultraviolet inhibitors to protect the film for its required life and must limit ultraviolet transmission to not more than 8 percent of the radiation between 300 and 380 nanometers. The adhesive must not be water activated. A water-soluble detackifier or release liner may be incorporated over the adhesive to facilitate film application. The adhesive must be 90 percent cured within 30 days of installation. Adhesives on film thicknesses of 0.010 inch (0.254 mm) and greater must be a minimum of 0.0008 inch (0.02032 mm) thick.

B202090 OTHER EXTERIOR WINDOWS

B202090 1.1 OPERABLE TRAY PASS WINDOWS

Frames and glass channels must be of heavy type 6063-TS aluminum extrusions with reinforcing as required. Include bullet-resistant

glazing and heavy-duty operable pass tray. Unit must have a minimum of architectural Class I anodized coating or a high-performance organic coating conforming to AAMA 2605. AAMA coatings must have a total dry film thickness of 1.2 mils.

B2030 EXTERIOR DOORS

Exterior doors must be heavy duty insulated steel doors and frames for service access. Door frames must be welded. Corner knockdown door frames are not permitted.

Use heavy-duty overhead holder and closer to protect doors from wind damage. Provide kickplates on the inside face of all exterior doors.

Weather-protect all exterior doors and related construction with low infiltration weatherstripping and sealants. Provide threshold with offset to stop water penetration while maintaining accessibility compliance.

Conform to the design criteria of ASCE 7.

See section B203008, EXTERIOR DOOR HARDWARE, for door hardware requirements. For all installations, provide a recessed key box (Knox Box) approximately 7 inches x 7 inches (175 mm x 175 mm) with 4-3/4 inches (120 mm) solid steel door at primary exterior entry for storage of keys and access cards accessible by the fire department.

B203001 SOLID DOORS

B203001 1.1 STEEL DOORS

Hardware preparation must be in accordance with ANSI A250.6. Doors must be hung in accordance with ANSI A115.16.

B203001 1.1.1 Steel Doors

Steel doors must be ANSI A250.8, Level 4, exterior, main entry doors, with a physical performance level of, Model 1 or 2.

Doors may be specified to be insulated. Door selection must be specified in the project program according to the following:

a. Standard Duty Doors - Level 1, physical performance Level C, Model [1] [2]
b. Heavy Duty Doors - physical performance Level B, Model [1] [2]
c. Extra Heavy Duty Doors – ANSI A250.8, Level 3, physical performance Level A, Model [1] [2] [3]
d. Maximum Duty Doors – ANSI A250.8, Level 4, physical performance Level A, Model [1] [2]

B203001 1.1.2 Residential Insulated Steel Entry Door Systems

Insulated steel doors and frames must be provided for residential construction with a core of polyurethane foam and an R factor of 10.0 or more (based on a k value of 0.16). Face sheets, edges, and frames of galvanized steel not lighter than 23 gage thick

(0.7 mm) for paneled door faces, or 16 gage thick (1.5 mm) for solid doors, with vinyl door bottom flashing. Frames must be a minimum 16 gage thick (1.5 mm) respectively; with magnetic weatherstripping; nonremovable-pin hinges; thermal-break aluminum threshold. Doors and frames must receive phosphate treatment, rust-inhibitive primer, and baked acrylic enamel finish. Doors must have been tested in accordance with ANSI A250.4 and must have met the requirements for Level C. Prepare doors to receive specified hardware. Doors must be 1-3/4 inch (44.5 mm) thick.

B203001 1.1.3 Insulation Cores

Insulated cores must be of type specified, and provide an apparent U-factor of .48 in accordance with SDI 113 and must conform to:

a. Rigid Polyurethane Foam: ASTM C591, Type 1 or 2, foamed-in-place or in board form, with oxygen index of not less than 22 percent when tested in accordance with ASTM D2863; or
b. Rigid Polystyrene Foam Board: ASTM C578, Type I or II; or
c. Mineral board: ASTM C612, Type I.

B203001 1.1.4 Accessories

a. Louvers must comply with SDI 111-C, must be stationary, sight-proof type. Use lightproof louvers if function of room requires darkness. Louver frames must be 20-gage steel with louver blades minimum 24 gage.
b. Astragals: For pairs of exterior steel doors that will not have aluminum astragals or removable mullions, provide overlapping steel astragals with the doors.
c. Moldings: Provide moldings around glass of exterior doors and louvers. Provide non-removable moldings on outside of exterior doors. Secure inside moldings to stationary moldings, or provide snap-on moldings. Muntins must interlock at intersections and must be fitted and welded to stationary moldings.

B203001 1.1.5 Standard Steel Frames

ANSI A 250.8. Form frames with welded corners for installation in exterior walls. Form stops and beads of 20 gage steel. Frames must be set in accordance with ASTM A250.11.

B203001 1.1.6 Anchors

Anchor all frames with a minimum of three jamb anchors and base steel anchors per frame, zinc-coated or painted with rust-inhibitive paint, not lighter than 18 gage. Mortar infill frames in masonry walls, and infill with gypsum board compound at each jamb anchor in metal frame walls. Only use surface exposed bolted anchors in concrete walls.

B203001 1.1.7 Finishes

a. Exterior Doors, Factory-Primed and Field Painted Finish – Doors and frames must be factory primed with a rust inhibitive coating as specified in ANSI A250.8. Factory prime doors on six sides of the door. Manufacturer's primer and field painting must be compatible with finish system in the paragraph "EXTERIOR PAINTING AND SPECIAL COATINGS".
b. Exterior Doors Galvanized Finish – Must be Commercial Quality, Coating Class A, zinc coating in accordance with ASTM A 591 when facility is located further than 300 feet (91 meters) from the ocean. When facility is located within 300 feet (91 meters) of the ocean, provide G60 galvanized coating in accordance with ASTM A 924/A 924M and ASTM A 653/A 653M.

B203001 1.2 WOOD DOORS

Solid wood or particleboard core with solid wood edge bands and reinforced at all hardware attachments to door with sound grade hardwood. Exterior wood doors are only allowed in residential construction where facility design, overhangs and porches eliminate direct rain/moisture contact from wind driven rain.

B203001 1.2.1 Stile and Rail Doors

Stile and rail doors must be premium or custom grade Ponderosa pine stile and rail doors conforming to WDMA I.S.6A-01, heavy duty.

B203001 1.2.2 Flush Doors

Flush doors must conform to WDMA I.S.1-A.

Exterior Flush Doors - Solid wood core, Type I conforming to WDMA I.S. 1-A.

B203001 1.2.3 Wood Door Louvers

Door louvers must be of the manufacturer's standard design and must transmit a minimum of 35 percent free air. Louver must be a galvanized coated louvers with insect screens and comply with SDI 111-C, must be stationary, sight-proof type. Use lightproof louvers if function of room requires darkness.

B203001 1.2.4 Door Light Openings

Where glazed openings are required, use the manufacturer's standard wood moldings. Moldings for doors to receive a natural finish must be of the same species and color of the face veneer.

B203001 1.2.5 Fabrication

a. Marking - Each door must bear a stamp, brand or other identifying mark indicating quality and construction of the door.

b. Adhesives and Bonds - WDMA I.S. 1-A. Use Type I bond for exterior doors. Adhesive for doors to receive a natural finish must be non-staining.

B203002 GLAZED DOORS

B203002 1.1 ALUMINUM GLAZED DOORS

See B202002 STOREFRONTS, paragraph titled, "Doors and Frames."

B203004 OVERHEAD ROLL-UP AND OVERHEAD SECTIONAL DOORS

Refer to RFP PART 3, Chapter 6 for project specific exterior overhead sectional and roll-up doors system requirements. Do not use exterior roll-up doors as an entrance into conditioned spaces.

B203004 1.1 OVERHEAD ROLL-UP DOORS

Provide overhead doors in accordance with Door and Access Systems Association International (DASMA) requirements. Overhead roll-up doors must conform to ANSI/ DASMA 207. Provide overhead roll-up doors with minimum 22 gage thermal insulated slats, however use door weight, pressure, and width to determine if a heavier gauge slat is required. Electric operators must have protected 3-button switches conforming to NEMA MG 1, NEMA ICS 1, and NEMA ICS 2. Galvanize door and sheet metal components in accordance with ASTM A653. Apply painted coat required in RFP Part 3, Chapter 6, over the galvanizing to all components directly exposed to the weather.

B203004 1.2 OVERHEAD SECTIONAL DOORS

Provide overhead doors in accordance with Door and Access Systems Association International (DASMA) requirements. Overhead sectional doors must conform to ANSI/DASMA 102 Completely close the door opening in the closed position and make the full width and height of the door opening available for use in the open position. Provide a 3 inch (75 mm) track when required by manufacturers standards, or design pressure and forces on the door, or if the door is equal to or greater than 16 feet (4877 mm) high or wide. Design door storage to allow full use of the space around the door for the activities required in the space. Provide a minimum of 16 inches (400 mm) of headroom for 2 inch (50 mm) tracks, 21 inches (525 mm) of headroom for 3 inch (75 mm) tracks, or a high lift type or vertical lift type. If motorized, provide limit switches to automatically stop doors at the fully open and closed positions. Provide readily adjustable limit switch positions..

Doors must remain operable and undamaged after conclusion of tests conducted in accordance with ASTM E 330 using the design wind load. Form steel door sections of hot-dipped galvanized steel not lighter than 16 gage using a flush surface without ribs or grooves. Sections must be not less than 1 3/4 inches (44.50 mm) minimum panel thickness. Provide maximum insulation value to insulate doors as required to meet energy requirements. Cover interior of door sections with steel sheets of not lighter than 24 gauge to completely enclose the insulating material. Provide galvanized steel tracks not lighter than 14 gauge for 2 inch (50 mm) tracks and not lighter than 12 gauge for 3 inch (75

mm) track. Provide a positive locking device and cylinder lock with two keys on manually operated doors. Form aluminum door panels of 0.050 inch (1.3 mm) sheet aluminum and styles and rails of 6063-T6 aluminum. Galvanize door and steel sheet metal components in accordance with ASTM A653.

B203004 1.3 OVERHEAD DOOR FINISH

Finish steel door and components with hot dipped galvanized coating and apply a baked-on primer and topcoat painted finish. If powder coat finish is required in RFP Part 3, Chapter 6, painted system must conform to the following requirements;

a. Outgas Forgiving Primer

b. Film Thickness per ISO 2360 - 2.5-3.5 mils (60-80 Î¼m)

c. Mandrel Bending Test per ASTM D522 - 1/8 inches (3mm)

d. Impact Test per ASTM D2794 - Up to 80 in/lb. Cracking at the perimeter of the concave area

but no cracking pick off

e. Pencil Hardness per ASTM D3363 - 2H minimum.

f. Color Change per ASTM D2244 - â‰¤Î”Îµ 5.0 (Hunter)

g. Gloss Retention per ASTM D523 - >80%

h. Salt Spray Test per ASTM B117 - 3000 hours

B203005 HANGAR DOORS

DOR utilize UFGS Specification Section 08 34 16.10, *Steel Sliding Hangar Doors*, or Specification Section 08 34 16.20, *Vertical Lift Fabric Doors*, for the project specification submittal for the project. Refer to the Project Program for which type of hanger door is used on this project.

B203008 EXTERIOR DOOR HARDWARE

Provide the services of an Architectural Hardware Consultant (AHC), Certified Door Consultant (CDC), or an Electrified Hardware Consultant (EHC) to assist the Designer of Record in preparation of the door hardware schedule and product selection. The hardware consultant must sign and seal the door hardware construction submittal. Provide, as far as possible, door hardware of one manufacturer’s make. All hardware must be clearly and permanently marked by the manufacturer where it will be visible after installation.

B203008 1.1 HINGES

BHMA A156.1, size to match door size, but in no case less than 4-1/2 x 4-1/2 inches (114 mm x 114 mm), with non-removable pin and anti-friction bearing hinges. Use two hinges for doors 60 inches (1500 mm) or less in height and one additional hinge for each additional 30 inches (750 mm), or fraction thereof, in door height.

B203008 1.2 PIVOTS

BHMA A156.4.

B203008 1.3 LOCKS AND LATCHES

Commercial (all construction except family housing) buildings locks and latches must be BHMA A 156.13, Series 1000, Operational Grade 1, Security Grade 2 for exterior building entrances and other high-use doors not requiring exit devices. Use BHMA A 156.2, Series 4000, Grade 1 for all Commercial buildings locks and latches not using Series 1000 hardware.

For Residential (family housing) projects, use Series 4000, Grade 2 hardware.

B203008 1.3.1 Combination Locks for Sensitive Areas and Vault Doors

If required for exterior use, see C102007 1.1.6 "Combination Locks" for the specification. This installation may require special weather protection.

B203008 1.3.2 Pushbutton Combination Locks

Where required, provide a heavy-duty, mechanical combination lockset with 5 pushbuttons, standard-sized knob or lever, 3/4 inch (19 mm) deadlocking latch with 2-3/4 inch (70 mm) back-set. Provide deadbolt key override option. Safelock, Simplex, and Venn are acceptable manufacturers. Provide a hardware grade equivalent to Grade 1, series 4000. Include a 5-year parts and labor warranty.

B203008 1.4 CARD KEY SYSTEM

Where required, provide card key type access units. Provide lithium battery powered, magnetic stripe keycard locksets that are ANSI/BHMA A156.13, Series 1000, Grade 1, mortise or ANSI/BHMA A156.2, Series 4000, Grade 1, cylindrical locks, tamper resistant, UL listed with 1 inch (25 mm) throw deadbolt, 3/4-inch (19 mm) throw latch bolt, auxiliary deadlocking latch, and 2-3/4 inch (68.75 mm) backset. The latch bolt and the dead bolt must be operated simultaneously by rotating inside lever. Locks with mechanical override lock cylinders are not acceptable. Locks must be operated only by a correctly encoded keycard. Use of a newly issued keycard automatically re-keys the lock and voids the previous keycard. The lock must re-lock immediately after outside lever is turned and latch retracted. Locks must have memory that is capable of recording up to 140 entries into each room, identification of the keycard used to access the room, the date and time of entry. Entry information of the lock must be retrievable by a data key that can be inserted into the lock and then taken to the front desk printer to display information. Other components that are required for this system at the front desk are a personal or laptop computer, printer and encoder to program each key.

For exit device locks with card key access, provide mortise type, narrow stile exit devices with 24 volt DC, solenoid option for card key

exterior access at aluminum storefront doors. Provide mortise type exit devices with 24 volt DC, solenoid option with alarm and remote exterior access for card key access at insulated hollow metal doors. The alarmed exit device must sound when exiting only.

System must be capable of accepting a minimum of 12 keycard access levels, security auditing and computer interfacing with existing installations management system. Provide a single point of contact customer service representative accessible by telephone with a 10-digit telephone number without additional dialing hierarchies except that a maximum 4-digit extension is permissible. On-site service must be provided within 3 hours from request within the first 12 months of occupancy. Provide a 5-year parts and labor warranty.

B203008 1.5 EXIT DEVICES

BHMA A 156.3, Grade 1. Provide on exit doors if it is anticipated that more than 50 people may use a particular door in an emergency exit situation. Touch bars must be provided in lieu of conventional crossbars and arms. Use manufacturer's integral touch bars in aluminum storefront doors.

B203008 1.6 EXIT LOCKS WITH ALARM

BHMA A 156.5.

B203008 1.7 CYLINDERS AND CORES

If required, provide cylinders and cores for new locks, including locks provided under other sections of this specification. Cylinders and cores must have seven pin tumblers. Cylinders must be products of one manufacturer, and cores must be the products of one manufacturer. Rim cylinders, mortise cylinders, and knobs of bored locksets must have interchangeable cores, which are removable by special control keys. Stamp each interchangeable core with a key control symbol in a concealed place on the core.

B203008 1.8 KEYING SYSTEM

Keying system must be a master key system for the facility, unless more than one tenant/tenant command must reside in a facility, or a grand master keying system, or great, grand master keying system if multiple tenants or buildings are required. The keying system must be an extension of the existing keying system for additions to existing facilities. The keying system must allow for construction interchangeable cores when subcontractors require keys during construction. If required, provide a key cabinet.

The Contractor must coordinate a keying system meeting. The Contractor's Project Manager, Superintendent, Hardware Subcontractor, Electrical Subcontractor (if keying hardware is electric), Designer of Record, Contracting Officer, Public Works Base Hardware Specialist, and the Using Activity must attend this meeting to establish the keying system for the project. This meeting is intended to identify base limitations, the necessary security, and access control within the facility. The meeting must produce a marked up copy of the floor plan

indicating the doors to receive locks and the doors to be keyed together, and any master keying or grand master keying.

B203008 1.9 KEYS

Furnish one file key, one duplicate key and one working key for each key exchange and for each master and grand master keying system.

B203008 1.10 LOCK TRIM

Cast, forged or heavy wrought construction and commercial plain in design.

B203008 1.10.1 Knobs and Roses

Knobs and roses must meet test requirements of BHMA A 156.2 and BHMA A 156.13.

B203008 1.10.2 Lever Handles

Provide lever handles in lieu of knobs as required by DoD ABAAS. Lever handles must meet the test requirements of BHMA A 156.13 for mortise locks. All lever handles (mortise or cylinder) must be the freewheeling type.

B203008 1.11 DOOR BOLTS

BHMA A 156.16, Grade 1. Provide two flush bolts for each inactive leaf of a pair of doors.

B203008 1.12 CLOSERS

BHMA A 156.4, Series C02000, Grade 1, with PT 4C, 1-1/2 inch piston, heavy duty forged arm, full size case. Provide closers for all exterior doors, fire-rated doors, corridor doors, stairway doors, and secure area doors, for non-residential (commercial) construction, as a minimum.

B203008 1.13 OVERHEAD HOLDERS

BHMA A 156.8, Grade 1. Provide for exterior doors for non-residential (commercial) construction.

B203008 1.14 DOOR PROTECTION PLATES

Kick plates must conform to BHMA A 156.6. Provide kick plates on all doors with closers and all doors leading to corridors or circulation spaces. Provide armor plates on all doors to receive cart traffic. Provide mop plates on all doors in rooms with a mopable floor finish that do not have kick plates.

B203008 1.15 DOOR STOPS AND SILENCERS

BHMA A 156.16. Provide silencers, Type L03011, three per single door and four per double door, for doors in hollow metal frames.

B203008 1.16 THRESHOLDS

BHMA A 156.21. Provide thresholds with offset to stop water infiltration, while maintaining accessibility requirements.

B203008 1.17 WEATHERSTRIPPING

BHMA A 156.22. Air leakage of weatherstripped doors must not exceed 0.5 CFM of air per square foot of door for residential doors, and 1.25 CFM for non-residential doors (unless a more restrictive infiltration level is specified).

B203008 1.18 RAIN DRIPS

For all exterior doors that open to the outside, where the door swing area is not covered by an overhang, provide top and bottom rain drips complying with ANSI R3Y535 as a minimum. Greater weathersealing may be required by the geographic location of the project.

B203008 1.19 FINISHES

One of the following hardware finish systems must be provided, and match the interior door hardware:

a. BHMA A156.18. Hardware must have BHMA 630 finish (satin stainless steel), unless specified otherwise. Provide items not manufactured in stainless steel in BHMA 626 finish (satin chromium plated) over brass or bronze, except surface door closers which must have aluminum paint finish, and except steel hinges which must have BHMA 652 finish (satin chromium plated). Hinges for exterior doors must be stainless steel with BHMA 630 finish or chromium plated brass or bronze with BHMA 626 finish. Exit devices may be provided in BHMA 626 finish in lieu of BHMA 630 finish. Exposed parts of concealed closers must have finish to match lock and door trim. Hardware for aluminum doors must be finished to match the doors.
b. BHMA A156.18. Hardware must have BHMA 612 finish (satin bronze), unless specified otherwise. Surface door closers must have bronze paint finish. Steel hinges must have BHMA 639 finish (satin bronze plated). Exposed parts of concealed closers must have finish to match lock and door trim. Hardware for aluminum doors must be finished to match the doors. Hardware showing on interior of bathrooms, shower rooms, toilet rooms, washrooms, laundry rooms, and kitchens must have BHMA 629 finish (bright stainless steel) or BHMA 625 finish (bright chromium plated).

B203090 OTHER EXTERIOR SPECIALTY DOORS

Where required, provide special function exterior doors and gates and assemblies required for the proper operation and functioning of the facility. Exterior doors system may include factory-finished or painted doors and frames.

B203090 1.1 AUTOMATIC ENTRANCE DOORS

B203090 1.1.1 Automatic Swinging Entrance Door Controller

Automatic swinging entrance doors must be glazed aluminum doors and frames as specified in this section. Controller must be a dual function safety device that utilizes planar K-band microwave motion detectors and active infrared presence sensors at each door to protect individuals in the path of the swinging door. The planar K-band motion detector must be capable of sensing an individual moving as slow as 2.2 inches (55.8 mm) per foot. The infrared sensors must employ both diffused presence sensors that see through the plane of the door, and distance measuring sensors. The infrared sensors must constantly remain in operation. The safety device must call for reactivation or creep closing function, depending on the location of the sensor. If the sensor is located on the swing side, it will call for reactivation; if it is located on the pull side, it will call for creep closing function. Sensing system must be fully adjustable with a universal remote control, and meet or exceed the requirements of ANSI A156.10. System must include aluminum guard rails and signage for additional personnel safety.

B203090 1.1.2 Automatic Sliding Entrance Door Controller

Automatic sliding entrance doors must be glazed aluminum doors and frames as specified in this section. Controller must be a dual function safety device that utilizes planar K-band microwave motion detectors and focused active infrared presence sensors at each door to protect individuals in the path of the sliding door. The planar K-band motion detector must be capable of sensing an individual moving as slow as 2.2 inches (55.8 mm) per foot. The focused active infrared sensors must overlap their patterns for full coverage of the motion pattern and extend its range all the way to the floor surface. The infrared sensors must constantly remain in operation even when the door is in the closing cycle. Door and frame must have a "break-away" feature that allows the door to be pushed open in an emergency exit situation.

-- End of Section --

SECTION B30

ROOFING
05/14

B30 GENERAL

RFP Part 3 including the Engineering System Requirements (ESR) provide project specific requirements. The RFP Part 4, Performance Technical Sections (PTS) provide generalized technical requirements that apply to multiple facility types and include more requirements than are applicable to any one project. Therefore, only the RFP Part 4 requirements that apply to the project and further define the RFP Part 3 project specific requirements are required.

B30 1.1 DESIGN GUIDANCE

Roofing is to take place only in areas where existing-to-be-removed-equipment penetrations are to be patched. New roofing material, insulation, decking, etc. is to it so match existing adjacent construction.

B30 1.3 DESIGN SUBMITTALS

Design submittals shall be in accordance with Z10, *General Performance Technical Specifications*, UFGS section 01 33 10.05 20, *Design Submittal Procedures*, FC 1-300-09N, *Navy and Marine Corps Design Procedures* and UFC 3-101-01, *Architecture*.

B30 1.4 CONSTRUCTION SUBMITTALS

Submit construction submittals in accordance with PTS Section Z10, *General Performance Technical Specifications*. In addition to the Z10 requirements, the Designer of Record (DOR) shall approve the following submittals as a minimum:

Test reports, color samples, certificates of conformance, warranties, close out documentation, and manufacturer's instructions for application and installation on all products used on the roof. Products used on the roof consist of but are not limited to structural deck, insulation, membrane or panels, Standing Seam Metal Roofing (SSMR), flashing, fasteners, nailers, accessories and equipment support curbs or equipment support stands for solar equipment, equipment roof plan, maintenance access and paths.

B3010 ROOF COVERINGS

Roof coverings shall comply with the requirements of UFC 3-110-03, *Roofing*, and NRCA, *Roofing and Waterproofing Manual* found at http://www.nrca.net/rp/technical/manual/manual.aspx as the primary NAVFAC roofing criteria. Roof selection shall comply with UFC 3-330-02A, *Design: Commentary on Roof Systems*. Determine wind uplift using wind speed in accordance with ASCE-7.

Submit the INFORMATION CARD (see "Form 1" at the end of this section) Provide

a typewritten card, laminated in plastic and framed in a weather-tight frame, or a photoengraved 0.032-inch (0.81 mm) thick aluminum card for the roof. This card shall be a minimum size of 8 1/2 x 11 inch (216 x 280 mm) and contain information listed in the attached Form 1. Install the card where directed. Furnish framed card and a duplicate card to the Designer of Record.

B301002 LOW SLOPE ROOF SYSTEMS

B301002 1.1 GENERAL REQUIREMENTS

a. Warranty (Except SSSMRS) - Furnish the roofing system manufacturer's materials and workmanship warranty for the roofing system. The warranty period shall not be less than 20 years from the date the Government acceptance of the work. The warranty shall be issued directly to the Government and shall not be limited in dollar value. The system warranty shall include roofing membrane, insulation, flashings, accessories and attachments.
b. Wind Uplift - The complete roof covering assembly shall be rated in accordance with FM P7825, capable of withstanding an uplift pressure as determined by ASCE-7, and FM I-49 for perimeter and flashing attachment.
c. Fire Safety - The complete roof covering assembly shall meet ASTM E 108, Class 1A or UL 790, Class A; and be listed as Fire-Classified roof deck construction in the UL RMSD, or Class I roof deck construction in FM P7825. All components of the system shall be UL labeled. Complete roof covering assembly shall:1) Be Class A or B rated in accordance with ASTM E 108 , FM 4470, or UL 790; and2) Be listed as part of Fire-Classified roof deck construction in UL RMSD, or Class I roof deck construction in FM P7825c.
d. Traffic Pads - Provide on roof system to protect roof from foot traffic. Provide traffic pads from roof access to and around roof mounted mechanical equipment and underneath removable mechanical equipment access panels. Traffic pads shall be of compatible material to roof.

B301003 ROOF INSULATION & FILL

The insulation system shall be coordinated with the mechanical design to suit the energy requirements of the facility.

B301003 1.2 ROOF AND DECK INSULATION

This paragraph covers the requirements for insulation materials used below the roofing systems.

B301003 1.2.1 Insulation Types

Roof insulation shall have an R-value determined per ASHRAE Standard 90.1 (latest edition) and per project energy goals and be one or an assembly of a maximum of three of the following materials and compatible with attachment methods for the specified insulation, roof system, and match existing.

B301003 1.2.3 Protection Board

Provide for use as a thermal barrier (underlayment) or protection board for hot-mopped applications.

B301003 1.2.4 Glass Mat Gypsum Roof Board

ASTM C 1177, with a 0 Flame Spread and 0 Smoke Developed when tested in accordance with ASTM E 84.

B301003 1.2.5 Bitumens

a. Asphalt Primer - ASTM D 41
b. Asphalt - ASTM D 312, Type III or IV
c. Asphalt Roof Cement - ASTM D 4586, Type I for horizontal surfaces, Type II for vertical and sloped surfaces. Roof cement shall be compatible with membrane materials.

B301003 1.2.6 Underlayment

a. Asphalt-Saturated Felt Base Sheet for Single Layer Application - ASTM D 4869, Type II or ASTM D 226, Type II (30 pounds).
b. Polymer-Modified Self-Adhering Bitumen Sheet, 40 mil (1.1 mm) minimum thickness. Provide at roof perimeter, valley and roof penetration locations as a minimum.

B301003 1.2.7 Seal at Penetrations

Provide pre-manufactured flashing components for use in single-ply roofing applications. Seal laps and penetrations to prevent moisture vapor penetration. Adhesives, sealants, prefabricated components and spray foam products may be required.

B301003 1.2.8 Fasteners

Fasteners shall be flat, round or hexagonal steel (not less than 1-3/8"(35 mm) diameter) and 28 gage, or plastic plates (not less than 3 inches (75 mm) in diameter).

Fasteners in lightweight cellular concrete decks shall penetrate at least 1 inch (25 mm) but not more than 1-1/2 inches (32 mm) into the deck. Withdrawal resistance from lightweight cellular concrete deck shall be not less than 40 lbs.(18 kg) each, or 120 lbs. (54 kg) each in metal deck.

Fasteners in steel decks shall be hardened fasteners or screws conforming to FM A/S4470 and listed in FM P7825 for Class I roof deck construction.

Fasteners shall be place to withstand an uplift pressure required by the project program in the field of the roof and FM LPDS 1-49 for perimeter component and flashing attachment.

Roofing Nails - Provide corrosion resistant ring shank nails of sufficient length to penetrate a minimum of 1 inch (25 mm) into wood nailers or so as to provide appropriate embedment in substrate below. Fasteners shall conform to FM A/S4470, and be placed to withstand an uplift pressure of 90 psf (4.3 kPa) conforming to FM P7825, and FM 1-49 for perimeter fasteners.

B301003 1.2.9 Wood Nailers

Wood nailers shall be pressure-preservative-treated in accordance with AWPA M2 Standards, permanently marked or branded, and installed flush with the top of the adjacent insulation board. Separate treated wood nailers from roofing metals with underlayment.

B301003 1.2.9.1 Fasteners

Provide stainless steel, double hot-dipped galvanized or other corrosion resistant fasteners recommended by the treatment manufacturer for use with treated wood.

-- End of Section --

FORMS

ROOFING SYSTEM COMPONENTS

1. Contract Number: _____

2. Building Number and Location: _____

3. NAVFAC Specification Number: _____

4. Deck Type: _____

5. Slope of Deck: _____

6. Insulation Type and Thickness:_____

7. Insulation Manufacturer: _____

8. Vapor Retarder (_____) Yes (_____) No

9. Vapor Retarder Type: _____

10. Roofing Description: _____

    Manufacturer (Name, address, and phone no.): _____

    _____

    Type: _____

    Method of attachment: _____

11. Statement of Compliance or Exception: _____

    _____

    _____

12. Date Roof Completed: _____

13. Warranty Period: _____

14. Roofing Contractor (Name and Address):

    _____

    _____

    _____

15. Prime Contractor (Name and Address):

    _____

_____

_____

Contractor's Signature _____ Date: _____

Inspector's Signature _____ Date: _____

Form page 1

CONTRACTOR'S FIVE (5) YEAR NO PENAL SUM WARRANTY FOR STRUCTURAL STANDING SEAM METAL ROOF (SSSMR) SYSTEM

FACILITY DESCRIPTION_____

BUILDING NUMBER:_____

CONTRACT NUMBER:_____

CONTRACTOR

CONTRACTOR:_____

ADDRESS:_____

POINT OF CONTACT:_____

TELEPHONE NUMBER:_____

OWNER

OWNER:_____

ADDRESS:_____

POINT OF CONTACT:_____

TELEPHONE NUMBER:_____

CONSTRUCTION AGENT

CONSTRUCTION AGENT:_____

ADDRESS:_____

POINT OF CONTACT:_____

TELEPHONE NUMBER:_____

Warranty page 1

CONTRACTOR'S FIVE (5) YEAR NO PENAL SUM WARRANTY FOR STRUCTURAL STANDING SEAM METAL ROOF (SSSMR) SYSTEM (continued)

THE SSSMR SYSTEM INSTALLED ON THE ABOVE NAMED BUILDING IS WARRANTED BY _____ FOR A PERIOD OF FIVE (5) YEARS AGAINST WORKMANSHIP AND MATERIAL DEFICIENCES, WIND DAMAGE, STRUCTURAL FAILURE, AND LEAKAGE. THE SSSMR SYSTEM COVERED UNDER THIS WARRANTY SHALL INCLUDE, BUT SHALL NOT BE LIMITED TO, THE FOLLOWING: THE ENTIRE ROOFING SYSTEM, MANUFACTURER SUPPLIED FRAMING AND STRUCTURAL MEMBERS, METAL ROOF PANELS, FASTENERS, CONNECTORS, ROOF SECUREMENT COMPONENTS, AND ASSEMBLIES TESTED AND APPROVED IN ACCORDANCE WITH ASTM E 1592. IN ADDITION, THE SYSTEM PANEL FINISHES, SLIP SHEET, INSULATION, VAPOR RETARDER, ALL ACCESSORIES, COMPONENTS, AND TRIM AND ALL CONNECTIONS ARE INCLUDED. THIS INCLUDES ROOF PENETRATION ITEMS SUCH AS VENTS, CURBS, SKYLIGHTS; INTERIOR OR EXTERIOR GUTTERS AND DOWNSPOUTS; EAVES, RIDGE, HIP, VALLEY, RAKE, GABLE, WALL, OR OTHER ROOF SYSTEM FLASHINGS INSTALLED AND ANY OTHER COMPONENTS SPECIFIED WITHIN THIS CONTRACT TO PROVIDE A WEATHERTIGHT ROOF SYSTEM; AND ITEMS SPECIFIED IN OTHER SECTIONS OF THE SPECIFICATIONS THAT ARE PART OF THE SSSMR SYSTEM.

ALL MATERIAL DEFICIENCIES, WIND DAMAGE, STRUCTURAL FAILURE, AND LEAKAGE ASSOCIATED WITH THE SSSMR SYSTEM COVERED UNDER THIS WARRANTY SHALL BE REPAIRED AS APPROVED BY THE CONTRACTING OFFICER. THIS WARRANTY SHALL COVER THE ENTIRE COST OF REPAIR OR REPLACEMENT, INCLUDING ALL MATERIAL, LABOR, AND RELATED MARKUPS. THE ABOVE REFERENCED WARRANTY COMMENCED ON THE DATE OF FINAL ACCEPTANCE ON _____ AND WILL REMAIN IN EFFECT FOR STATED DURATION FROM THIS DATE.

SIGNED, DATED, AND NOTARIZED (BY COMPANY PRESIDENT)

_____

(Company President) (Date)

Warranty page 2

CONTRACTOR'S FIVE (5) YEAR NO PENAL SUM WARRANTY FOR STRUCTURAL STANDING SEAM METAL ROOF (SSSMR) SYSTEM (continued)

THE CONTRACTOR SHALL SUPPLEMENT THIS WARRANTY WITH WRITTEN WARRANTIES FROM THE MANUFACTURER AND INSTALLER OF THE SSSMR SYSTEM, WHICH SHALL BE SUBMITTED ALONG WITH THE CONTRACTOR'S WARRANTY. HOWEVER, THE CONTRACTOR WILL BE ULTIMATELY RESPONSIBLE FOR THIS WARRANTY AS OUTLINED IN THE SPECIFICATIONS AND AS INDICATED IN THIS WARRANTY EXAMPLE.

EXCLUSIONS FROM COVERAGE

1. NATURAL DISASTERS, ACTS OF GOD (LIGHTNING, FIRE, EXPLOSIONS, SUSTAINED WIND FORCES IN EXCESS OF THE DESIGN CRITERIA, EARTHQUAKES, AND HAIL).

2. ACTS OF NEGLIGENCE OR ABUSE OR MISUSE BY GOVERNMENT OR OTHER PERSONNEL, INCLUDING ACCIDENTS, VANDALISM, CIVIL DISOBEDIENCE, WAR, OR DAMAGE CAUSED BY FALLING OBJECTS.

3. DAMAGE BY STRUCTURAL FAILURE, SETTLEMENT, MOVEMENT, DISTORTION, WARPAGE, OR DISPLACEMENT OF THE BUILDING STRUCTURE OR ALTERATIONS MADE TO THE BUILDING.

4. CORROSION CAUSED BY EXPOSURE TO CORROSIVE CHEMICALS, ASH OR FUMES GENERATED OR RELEASED INSIDE OR OUTSIDE THE BUILDING FROM CHEMICAL PLANTS, FOUNDRIES, PLATING WORKS, KILNS, FERTILIZER FACTORIES, PAPER PLANTS, AND THE LIKE.

5. FAILURE OF ANY PART OF THE SSSMR SYSTEM DUE TO ACTIONS BY THE OWNER TO INHIBIT FREE DRAINAGE OF WATER FROM THE ROOF AND GUTTERS AND DOWNSPOUTS OR ALLOW PONDING WATER TO COLLECT ON THE ROOF SURFACE. CONTRACTOR'S DESIGN SHALL INSURE FREE DRAINAGE FROM THE ROOF AND NOT ALLOW PONDING WATER.

6. THIS WARRANTY APPLIES TO THE SSSMR SYSTEM. IT DOES NOT INCLUDE ANY CONSEQUENTIAL DAMAGE TO THE BUILDING INTERIOR OR CONTENTS THAT IS COVERED BY THE WARRANTY OF CONSTRUCTION CLAUSE INCLUDED IN THIS CONTRACT.

7. THIS WARRANTY CANNOT BE TRANSFERRED TO ANOTHER OWNER WITHOUT WRITTEN CONSENT OF THE CONTRACTOR; AND THIS WARRANTY AND THE CONTRACT PROVISIONS WILL TAKE PRECEDENCE OVER ANY CONFLICTS WITH STATE STATUTES.

**

Warranty page 3

CONTRACTOR'S FIVE (5) YEAR NO PENAL SUM WARRANTY FOR STRUCTURAL STANDING SEAM METAL ROOF (SSSMR) SYSTEM (continued)

**REPORTS OF LEAKS AND SSSMR SYSTEM DEFICIENCIES SHALL BE RESPONDED TO WITHIN 48 HOURS OF RECEIPT OF NOTICE, BY TELEPHONE OR IN WRITING, FROM EITHER THE OWNER OR CONTRACTING OFFICER. EMERGENCY REPAIRS TO PREVENT FURTHER ROOF LEAKS SHALL BE INITIATED IMMEDIATELY; A WRITTEN PLAN SHALL BE SUBMITTED FOR APPROVAL TO REPAIR OR REPLACE THIS SSSMR SYSTEM WITHIN SEVEN (7) CALENDAR DAYS. ACTUAL WORK FOR PERMANENT REPAIRS OR REPLACEMENT SHALL BE STARTED WITHIN 30 DAYS AFTER RECEIPT OF NOTICE, AND COMPLETED WITHIN A REASONABLE TIME FRAME. IF THE CONTRACTOR FAILS TO ADEQUATELY RESPOND TO THE WARRANTY PROVISIONS, AS STATED IN THE CONTRACT AND AS CONTAINED HEREIN, THE CONTRACTING OFFICER MAY HAVE THE SSSMR SYSTEM REPAIRED OR REPLACED BY OTHERS AND CHARGE THE COST TO THE CONTRACTOR.

IN THE EVENT THE CONTRACTOR DISPUTES THE EXISTENCE OF A WARRANTABLE DEFECT, THE CONTRACTOR MAY CHALLENGE THE OWNER'S DEMAND FOR REPAIRS OR REPLACEMENT DIRECTED BY THE OWNER OR CONTRACTING OFFICER EITHER BY REQUESTING A CONTRACTING OFFICER'S DECISION UNDER THE CONTRACT DISPUTES ACT, OR BY REQUESTING THAT AN ARBITRATOR RESOLVE THE ISSUE. THE REQUEST FOR AN ARBITRATOR MUST BE MADE WITHIN 48 HOURS OF BEING NOTIFIED OF THE DISPUTED DEFECTS. UPON BEING INVOKED, THE PARTIES SHALL, WITHIN TEN (10) DAYS, JOINTLY REQUEST A LIST OF FIVE (5) ARBITRATORS FROM THE FEDERAL MEDIATION AND CONCILIATION SERVICE. THE PARTIES SHALL CONFER WITHIN TEN (10) DAYS AFTER RECEIPT OF THE LIST TO SEEK AGREEMENT ON AN ARBITRATOR. IF THE PARTIES CANNOT AGREE ON AN ARBITRATOR, THE CONTRACTING OFFICER AND THE PRESIDENT OF THE CONTRACTOR'S COMPANY WILL STRIKE ONE (1) NAME FROM THE LIST ALTERNATIVELY UNTIL ONE (1) NAME REMAINS. THE REMAINING PERSON SHALL BE THE DULY SELECTED ARBITRATOR. THE COSTS OF THE ARBITRATION, INCLUDING THE ARBITRATOR'S FEE AND EXPENSES, COURT REPORTER, COURTROOM OR SITE SELECTED, ETC., SHALL BE BORNE EQUALLY BETWEEN THE PARTIES. EITHER PARTY DESIRING A COPY OF THE TRANSCRIPT SHALL PAY FOR THE TRANSCRIPT. A HEARING WILL BE HELD AS SOON AS THE PARTIES CAN MUTUALLY AGREE. A WRITTEN ARBITRATOR'S DECISION WILL BE REQUESTED NOT LATER THAN 30 DAYS FOLLOWING THE HEARING. THE DECISION OF THE ARBITRATOR WILL NOT BE BINDING; HOWEVER, IT WILL BE ADMISSIBLE IN ANY SUBSEQUENT APPEAL UNDER THE CONTRACT DISPUTES ACT.

A FRAMED COPY OF THIS WARRANTY SHALL BE POSTED IN THE MECHANICAL ROOM OR OTHER APPROVED LOCATION DURING THE ENTIRE WARRANTY PERIOD.

SECTION C10

INTERIOR CONSTRUCTION
05/14

C10 GENERAL

RFP Part 3 including the Engineering System Requirements (ESR) provide project specific requirements. The RFP Part 4, Performance Technical Sections (PTS) provide generalized technical requirements that apply to multiple facility types and include more requirements than are applicable to any one project. Therefore, only the RFP Part 4 requirements that apply to the project and further define the RFP Part 3 project specific requirements are required.

C10 1.1 DESIGN GUIDANCE

Provide the design and installation in accordance with the following references. This Performance Technical Specification (PTS) adds clarification to the fundamental requirements contained in the following Government Standards. The general requirements of this PTS section are located in PTS Section Z10, *General Performance Technical Specification*.

Industry standards, codes, and Government standards that are referenced in the section text that are not found in the Unified Master Reference List (UMRL) in the Construction Criteria Base (CCB) at the Whole Building Design Guide Website , are listed below for basic designation identification. Comply with the required and advisory portions of the current edition of the standard at the time of contract award.

C10 1.1.1 Industry Standards and Codes

Sealant, Waterproofing & Restoration Institute

C10 1.1.2 Government Standards

UNIFIED FACILITIES CRITERIA (UFC)

UFC 1-200-01	General Building Requirements(A reference in this PTS section to UFC 1-200-01 requires compliance with the Tri-Service Core UFCs that are listed in UFGS Section 01 33 10.05 20, which includes the following significant UFC(s):UFC 3-101-01, Architecture UFC 3-120-10, Interior Design)

C10 1.2 PERFORMANCE VERIFICATION AND ACCEPTANCE TESTING

Verification of satisfactory interior construction assemblies' performance shall be via Performance Verification Testing, as detailed in this section of the RFP. Provide special tests and special

inspections in accordance with UFGS Section 01 45 00.05 20, *Design and Construction Quality Control*. The Contractor shall pay the cost of all testing.

C10 1.2.1 Slump and Compressive Strength Tests for Grout

Slump between 8 and 11 inches (200 and 275 mm). Provide minimum grout strength of 2000 PSI in 28 days, as tested per ASTM C 1019.

C10 1.2.2 Door Closure Field Test for Demountable Partitions, Retractable Partitions, Operable Panels, and Accordion Partitions

Perform a flashlight test of all joints in partitions and partition to wall, floor, and ceiling. No light from a flashlight shall be visible from the opposite side of the partition. Adjust partition at locations where light is visible, and re-test.

C10 1.2.3 Field Test for Sprayed Fire-Resistive Materials

A qualified testing and inspection agency shall be engaged to prepare testing and adhesion reports to test for bond strength. Bond strength shall be tested per ASTM E 736 and be found to meet the requirements in UL's *Fire Resistance Directory* for coating materials.

C10 1.3 DESIGN SUBMITTALS

Design submittals shall be in accordance with Z10, *General Performance Technical Specifications*, UFGS section 01 33 10.05 20, *Design Submittal Procedures*, FC 1-300-09N, *Navy and Marine Corps Design Procedures*, UFC 3-101-01, *Architecture*, and UFC 3-301-01, *Structural Engineering*.

C10 1.4 CONSTRUCTION SUBMITTALS

Submit construction submittals in accordance with PTS Section Z10, *General Performance Technical Specifications*. In addition to the Z10 requirements, the Designer of Record (DOR) shall approve the following submittals as a minimum:

Doors, door hardware, windows and glazing, cabinets and countertops, casework, and fireproofing/firestopping.

All structural elements necessary for construction

C1010 PARTITIONS

For general use, metal studs and standard grade GWB, CMU with prime filler coat, or CMU/cast-in-place concrete with GWB or skim coat plaster are acceptable unless shown otherwise in the Project Program. Reinforce points where doorknobs can strike a wall and anchorage points for wall mounted equipment.

Provide control joints and installation techniques as recommended by the manufacturer. See PTS Section C30, *Interior Finishes*, for additional

information.

Provide painted GWB with access panels at surfaces furred for HVAC, plumbing and other utility services and controls behind wall surfaces.

Acceptable systems where "IMPACT RESISTANCE" (areas subject to physical abuse or wear) is designated in the project program requirements for impact resistance systems include:

a. CMU/cast-in-place concrete with or without plaster or furred impact resistant GWB or surface applied impact resistant textured acrylic architectural coating system.
b. GWB/metal stud system reinforced for impact resistance with a double layer of gypsum board using at least one layer of impact resistant gypsum board to resist denting and puncturing on the impact surface. If wall is subjected to impact on both sides, both sides of the stud require a double layer of gypsum board. Structural, mechanical, and acoustical design requirements effect the metal stud/gypsum support configuration.

C101001 FIXED PARTITIONS

Provide fixed partitions, except where demountable or retractable partitions are specifically required by the "Room Requirements", to include wood or metal studs, GWB, plaster, masonry and cast-in-place concrete walls. Sound-rated partition assemblies shall have a minimum Sound Transmission Coefficient (STC) as required by the project program. Construct sound-rated bulkheads above partition assemblies for continuity to the deck above.

C101001 1.1 CAST-IN-PLACE INTERIOR CONCRETE WALLS

Accomplish work in accordance with UFC 1-200-01, ACI 117 and 301/301M. Concrete Mix Design shall be suitable for the job conditions.

C101001 1.2 MASONRY PARTITIONS

Accomplish work in accordance with ACI 530.1/ASCE 6/TMS 602 and associated ASTM Standards for concrete masonry wall construction.

C101001 1.2.1 Testing

Masonry strength shall be determined in accordance with ACI 530.1. Where fire-rated assemblies are indicated, provide concrete masonry units that have been tested in conformance with ASTM E 119. Provide certificate of compliance to the Designer of Record (DOR) that the materials and assemblies meet the fire ratings indicated on the drawings.

C101001 1.2.2 Masonry Units Types

C101001 1.2.2.1 Concrete Masonry Units

Units of modular dimensions and air, water or steam cured. Surfaces of units to be plastered or stuccoed shall be sufficiently rough to provide bond and exposed surfaces of

units shall be smooth and of uniform texture.

a. Hollow Load-Bearing Units: ASTM C 90, Type I or II, made of lightweight or normal weight aggregate.
b. Hollow Non-Load-Bearing Units: ASTM C 129, Type I or II, made with lightweight or normal weight aggregate.
c. Special Shapes: Provide special shapes as necessary to complete the work.
d. Fire-Rated CMU: Products shall be tested and approved by United Laboratories (UL) according to testing methods described in ASTM E 119, and listed as 2, 3 or 4-hour fire-rated.

C101001 1.2.2.2 Glazed Structural Clay Tile

Provide glazed tile of Grade S, Type I, conforming to ASTM C 126. Tile for fire-rated walls shall have the percent of solid required for that rating.

C101001 1.2.2.3 Pre-Faced Concrete Masonry Units

Provide pre-faced concrete masonry units conforming to ASTM C 744, load-bearing or non-load-bearing, lightweight, Grade N, Type I.

C101001 1.2.2.4 Glass Masonry Units

Provide glass block units made of clear colorless glass with polyvinyl butyl edge coating. Provide all aggregates, horizontal and vertical joint reinforcing, panel anchors, and expansion strip as recommended by the glass block manufacturer.

C101001 1.2.3 Masonry Partition Materials

a. Mortar - Provide ASTM C 270, Type N or S for non-shear-wall interior masonry. For Glass Block use Type S, White Portland cement.
b. Portland Cement - ASTM C 150, Type I, II, or III.
c. Masonry Cement - ASTM C 91, Type N, S, or M.
d. Sand - ASTM C144.
e. Grout - ASTM C 476, Fine aggregate for grouting cells / spaces 3" (75 mm) or less, or coarse aggregate for grouting cells / spaces greater than 3" (75 mm). Slump between 8 and 11 inches (200 and 275 mm). Provide minimum grout strength of 2000 PSI in 28 days, as tested per ASTM C 1019.

C101001 1.2.4 Masonry Accessories

a. Horizontal Joint Reinforcement – Fabricate from cold drawn steel wire, ASTM A 82. Wire shall be hot-dipped galvanized after fabrication in accordance with ASTM A 153/ A 153M, Class B-2, 1.5 ounces of zinc per square foot (42.52 g / 0.0929 sq. meter).

b. Anchors and Wall Ties – Provide of stainless steel, ASTM A 167, Type 304, or zinc-coated steel.
c. Reinforcing Bars – ASTM A 615 / A 615M.

C101001 1.3 COLD-FORMED METAL FRAMING

Cold-Formed Metal Framing shall be designed and constructed in accordance with the provisions of UFC 1-200-01 and the International Building Code.

C101001 1.3.1 Studs

Galvanized steel, ASTM A 653 / A 653M, SS Grade 50, G60

C101001 1.3.2 Framing Accessories

Fabricate steel-framing accessories of the same material and finish used for framing members, with minimum yield strength of 33,000 psi (230 Mpa). Accessories include, but are not limited to, the following: bracing, bridging, blocking, web stiffeners, end and foundation clips, gusset plates, stud kickers, knee braces, girts, joist hangers, reinforcing and backer plates.

Provide permanent metal-to-metal contact separation from stud to electrical conduits, plumbing pipes, and other internal wall system components, such as electrical wires.

C101001 1.4 METAL SUPPORT ASSEMBLIES

Provide steel materials for metal support systems with galvanized coating per ASTM A 653/ A 653M, G60; aluminum coating ASTM A 463/ A 463M, T1-25; or a 55% aluminum-zinc coating ASTM A 792.

C101001 1.4.1 Suspended and Furred Ceiling Systems, and Wall Furring

ASTM C 841(for lath); ASTM C 645 (for GWB).

C101001 1.4.2 Non-load-Bearing Wall Framing / Furring

ML/SFA MLF (for lath); ASTM C 645, but not thinner than 0.0179 inch (0.4547 mm) thickness. Provide 0.0329 inch (0.8357 mm) minimum thickness for supporting wall hung items such as cabinetwork, equipment and fixtures and for GWB.

C101001 1.5 ROUGH CARPENTRY

Unless otherwise noted, all rough carpentry shall be concealed from view. All framing and board lumber shall be graded and marked by a recognized association or independent inspection agency. Certification of grade is acceptable in lieu of grade markings. Framing lumber such as studs, plates, caps, bucks and nailers shall be of the minimum grade for the application in accordance with the grading rules for the local species of framing and board lumber.

C101001 1.5.1 Moisture Content

Air-dry or kiln dry lumber as follows:

a. Framing lumber and boards – 19% maximum
b. Timbers 5" and thicker – 25% maximum

C101001 1.5.2 Fire-retardant Treatment

Comply with AWPA C20 or AWPA C27.

C101001 1.5.3 Preservative Treated Lumber

Preservative treated lumber shall be in accordance with AWPA Standards.

C101001 1.5.4 Structural Lumber

Provide of species and grade as listed in AF&PA 101 that have the following minimum allowable unit stresses: 1050 Fb, 700 Fc with 1,200,000 E (for engineered uses) but not less than required by structural calculations.

C101001 1.5.5 Plywood, Structural

PS-1, PS-2.

a. Plywood (Concealed) - C-D grade, exposure 1 durability classification, span rating of 24/16 or greater.
b. Plywood Shear Walls - Structural I, C-C or C-D grade, and a minimum thickness of 1/2 inch (12.5 mm), but not less than required by structural calculations.

C101002 DEMOUNTABLE PARTITIONS

This paragraph covers unitized/component based demountable walls/partitions and associated work, including tracks and anchoring systems. Requirements and configurations shall be in accordance with the project requirements. Majority of the components and hardware shall be provided by a single manufacturer and on the manufacturer's current GSA pricelist.

C101002 1.1 PERFORMANCE REQUIREMENTS

C101002 1.1.1 Product Construction

Panels and framework shall be unitized/component based(not stick built), and non-progressive. All panel components including frames, glass frames, door frames, base trim, ceiling trim, and tracks shall be cold-formed steel or extruded aluminum and powder coated. Panels shall be a minimum of 2-1/4" thick, and shall have panels available between 6"-48" with 1/16" minimum with nominal widths and filler panels available. Panels shall have no more than a Â¼" reveal between adjacent panels or the use of connectors in the same finish of the skin. Panels shall have integrated leveling devices and have a minimum of Â½"

adjustability at the ceiling and 1" of adjustability at the floor. Walls shall be capable of hanging any manufacturer's systems furniture. Walls must meet seismic requirements when applicable.

C101002 1.1.2 Surface Skin

Wall surfaces to be available including fabric, wood veneer, plastic laminate, painted MDF, glass, plexi-glass, resin, dry erase board, metal, and custom paint, with the option of being be segmented or monolithic. Surfaces all be interchangeable with the ability to apply a new skin/finish.

C101002 1.1.3 Door Assemblies

Doors shall be a minimum of 1-3/4" thick and available as a hinged or pivot door with the option of being a single or double doors, and with or without glass. All hardware to be included. Door and Frame assemblies shall be aligned and fitted, and securely anchored to partitions.

C101002 1.1.4 Glazing

Comply with the Federal Safety Standard for Architectural Glazing Materials and shall be factory installed. Options shall include clear, frosted, patterned, custom etched, back painted, and available for use on panels and doors.

C101002 1.1.5 Burning Characteristics and Fire Endurance

The system shall have a Class 'A' (under 25) flame spread rating in conformance with ASTM E 84.

Provide fabric and lining with a flame spread rating of 25 or less, fuel contribution rating of 15 or less, and a smoke generation of 50 or less when tested in accordance with ASTM E 84.

C101002 1.1.6 Acoustical Performance

Sound-rated partition assemblies shall have a minimum Sound Transmission Coefficient (STC) as required by the RFP Part 3, Project Program. STC ratings must be laboratory test and documentation must be provided.

C101002 1.1.7 Structural Performance

Panel deflection shall not exceed 1/120th of the vertical span when tested in accordance with ASTM E 72.

C101002 1.1.8 Electrical Requirements

Modular power options shall be available within solid wall cavities, base areas and frames and shall have open accessibility before, during and after installation. Power shall be accessible to power and data cabling, disconnection, and reconnection to

accommodate wall disassembly and relocation. Power Supply to consist of an 8-wire system with 3,3,2 circuits and 2+1 grounding or a 10-wire system with 4-4-2 circuits and 2+2 grounding with isolated grounding available. UL Listed manufactured wiring system rated for 20amp 120V/208V or 120V/240V. The components shall have a permanent label listing manufacturer, catalog number, CSA/UL listing. Component's wiring shall not be "de populated" to impede future configurations. Electrical system must be capable of working with other manufacturer's products. Light switch and outlet devices shall be provided by the mfr and be fully pre-wired and pre-installed at the factory. Cables shall have a J-Box option for hardwiring any manufacturer's furniture power feed cable. Receptacles to indicate which circuit within the modular wiring zone to which they are connected. Receptacles may/may-not be pre-dedicated but must be able to easily be switched to suit the user circuit requirements. Additional power and/or data modules & hardwired outlets (fire, safety, thermostats etc) shall have the option of being installed on any panel.

C101002 1.1.9 Installation

To include all materials, labor, equipment, and additional seismic bracing as necessary, needed for a turn-key installation. Existing Walls, ceilings, ceiling suspension systems, or floors shall not be altered or damaged to accomodate function of partitions. Manufacturer or manufacturer's representative must take field measurements prior to fabrication.

C101002 1.1.10 Field Test

Perform field tests as required in Paragraph C30 1.2 PERFORMANCE VERIFICATION AND FIELD TESTING.

C101002 1.2 WIRE MESH PARTITIONS

Wire mesh partitions shall be complete with all items necessary for a useable, and rigid installation. Provide pre-manufactured assemblies with pre-bolted connections. Wire mesh partition doors require a means of locking. Key and cylinder locks are required for partition doors used daily.

C101002 1.2.1 Materials

a. Steel shapes, plates and bars – ASTM A 36/ A 36M.
b. Cold-formed steel – AISI SG-673.
c. Wire mesh – Provide carbon steel wire with woven diamond mesh and intermediate crimping. Wire shall be 10 gauge mesh for seasonal storage, 6 gage mesh for protection of equipment and tools.

C101003 RETRACTABLE PARTITIONS

This paragraph covers all retractable partitions and associated work, including tracks and anchoring systems. Wall assemblies above retractable

partitions shall provide a sound barrier equal to, or greater than, the sound rating of the partition.

C101003 1.1 PERFORMANCE REQUIREMENTS

The retractable partitions below shall meet the following performance requirements.

C101003 1.1.1 Burning Characteristics

The system shall have a Class 'A' (under 25) flame spread rating in conformance with ASTM E 84.

C101003 1.1.2 Fire Endurance

Provide fabric and lining with a flame spread rating of 25 or less, fuel contribution rating of 15 or less, and a smoke generation of 50 or less when tested in accordance with ASTM E 84.

C101003 1.1.3 Acoustical Performance

Sound-rated partition assemblies shall have a minimum Sound Transmission Coefficient (STC) as required by the project program. Construct sound-rated bulkheads above partition assemblies for continuity to the deck above.

C101003 1.1.4 Electrical Requirements

Electrically powered partitions shall be controlled by electrical switches located in the room where the partitions are stored. Electrical outlets shall be tied to the building electrical power system through over-head or end-mount base feeds.

C101003 1.1.5 Door Closure Field Test

Perform field tests as required in Paragraph C30 1.2 PERFORMANCE VERIFICATION AND FIELD TESTING.

C101003 1.2 PARTITION MATERIALS

a. Aluminum Extrusions - ASTM B221, Alloy 3003
b. Steel Sheets - ASTM A 653 / A653M
c. Fabric Coating - CFFA-W-101-B, Type II

C101003 1.2.1 OPERABLE PANEL PARTITIONS

Operable panel partitions shall be factory finished, supported from an overhead track without floor guides, and complete with hardware, track, and accessories necessary for operation.

a. Suspension System - shall consist of steel or heavy duty extruded aluminum track connected to the structural system by threaded rods, and trolleys designed to support the weight of the partition. Provide steel track of 16 gage

minimum, phosphate treated and finished, or zinc or cadmium coated, or provide extruded aluminum track with minimum thickness of 1/8 inch (3.2 mm). Tracks shall have an integral ceiling guard. Trolleys shall have at least two ball bearing nylon or steel tired wheels spaced according to manufacturer's design criteria and four at an end post.

C101003 1.2.2 ACCORDION PARTITIONS

Provide full accordion type partitions, factory finished, supported from overhead track without floor guides, and complete with hardware, track, and accessories necessary for operation.

Suspension System – shall consist of steel or aluminum track and trolleys designed to support the weight of the partition. Provide steel track of 16 gage minimum, phosphate treated and finished, or zinc or cadmium coated, or provide extruded aluminum track with minimum thickness of 1/8 inch (3.2 mm). Tracks shall have an integral ceiling guard. Trolleys shall have at least two ball bearing nylon or steel tired wheels spaced according to manufacturer's design criteria and four at an end post.

C101003 1.2.3 CUBICLE TRACK AND HARDWARE

Provide heavy-duty ceiling surface mounted tracks except in ceiling heights over nine feet, hanger mounted tracks may be used, with stainless steel fasteners. Track bends shall be a minimum of 18 inches radius.

C101003 1.2.3.1 Materials

a. Extruded Aluminum Track - ASTM B 221 and ASTM B 456; alloy 6063-TS, channel shape minimum 1-1/4 inch (32 mm) wide by 1-1/8 inch (29 mm) deep, 0.050 inch (1.27 mm) minimum wall thickness.
b. Carrier Unit - Provide silent type with double canted wheel carrier. Wheels shall have nylon on stainless steel hooks with swivel to support curtain. Provide 2.2 carriers for every foot of track length plus one additional carrier.

C101004 INTERIOR GUARDRAILS & SCREENS

This paragraph covers assemblies to include interior guardrails associated with open sides of floors, but not stairs' handrails. Also included are screens and associated work to include tracks and anchoring systems.

C101004 1.1 MATERIALS

a. Structural Carbon Steel - ASTM A 36/ A 36M
b. Structural Tubing - ASTM A 500
c. Steel Pipe - ASTM A 53, Type E or S, Grade B
d. Aluminum Alloy products - Products shall conform to ASTM B 209 for sheet plate, and ASTM B 221 for extrusions, and ASTM B 26/B

26M or ASTM B 108 for castings, as applicable.

C101004 1.2 FABRICATION FINISHES

C101004 1.2.1 Galvanizing

Hot-dip galvanize steel items to be exposed to water contact. Zinc-coat steel in the largest unit possible. Galvanize per ASTM A 123/ A 123M, ASTM A 153/ A 153M or ASTM A 653/ A 653M, G90, as applicable.

C101004 1.2.2 Non-Ferrous Metal Surfaces

Protect by plating, Class I anodic coatings, or 70% polyvinylidene fluoride organic coatings. See Section C30 for additional coatings/finish information.

C101004 1.3 GUARDRAILS

Design guardrails in accordance with the IBC, except delete the handrail design load reduction for code exceptions for residential, prisons, industrial, high hazard, and storage facilities. Provide materials in accordance with NAAMM PR, and provide the same size rail and post. Provide pipe collars of the same material and finish as the handrail and posts.

C101005 INTERIOR WINDOWS

For fixed interior windows, assemblies include frames, glazing, caulking, and other associated work. For other window types, see PTS Section B20, *Exterior Enclosure*. Glazing for windows specified under this section is located in C101007, "Interior Glazing."

C101005 1.1 ALUMINUM WINDOWS

Each window unit shall be a complete factory assembled unit with or without glass installed. Fabrication of window units shall comply with AAMA 101.

a. Fixed Windows - Type F, LC25 for residential, or HC40 for non-residential (commercial).
b. Sliding Glass Pass Windows - Frames and glass channels shall be of heavy type 6063-TS aluminum extrusions. Provide 1/4-inch (6.35 mm) clear tempered glass.
c. Bullet-Resistant Pass Windows - Conform to UL classification (1 through 8) as required by the installation. Provide fixed, bullet-resistant glazing with pass tray for installations requiring high levels of security.

C101005 1.2 VISION PANELS

a. Wood Windows

Wood windows shall consist of complete units, including sash,

glass, frame and hardware. Window units shall meet the Grade 40 requirements of AAMA 101. Wood members that will receive a transparent finish shall be in one piece, not finger-jointed.

b. Plastic Windows

Provide PVC windows, reinforcing members, welded corners, fasteners, hardware and anchors conforming to AAMA 101 or ASTM D 4099.

1) Windows shall be fixed or operable, as stated in the project program.

2) Material and Color - Window (PVC) color shall be a consistent color all the way through the material.

c. Hollow Metal Vision Panels – shall meet the requirements of hollow metal frames, paragraph C102001.

C101005 1.3 BULLET RESISTANT WINDOWS

Windows shall meet U.L. Classification, Rating Level 1 through 8, as required for the installation and stated in the project program. Each window shall be a complete factory-assembled unit with glass factory or field installed.

C101005 1.3.1 Glazing

Provide as specified under this section, paragraph entitled "Interior Glazing."

C101005 1.3.2 Setting Materials

Provide types required for the glazing applicable setting method specified in the GANA Glazing Manual. If sealants are employed, use elastomeric sealants, ASTM C 920, Type S or M, Grade NS, Class 12.5, Use NT.

C101005 1.4 FINISHES

Finish exposed aluminum or steel window surfaces as follows:

a. Anodic Coating

Architectural Class I (0.7 mil or thicker), designation AA-M10-C22-A41, clear (natural) or A42, integral color or A44, electrolytically deposited color anodized.

b. Organic Coating

Provide a high-performance coating in accordance with AAMA 2605 with a total dry film thickness not less than 1.2 mils (0.03 mm).

C101006 GLAZED PARTITIONS & STOREFRONTS

This paragraph covers fixed interior glazed partitions, including interior storefronts with doors. Assemblies include frames, glazing, caulking, and other associated work. See Section B20, *Exterior Enclosure*, for aluminum

storefront framing components and performance requirements.

C101006 1.1 GLASS

Refer to "Interior Glazing".

C101006 1.2 SETTING AND SEALING MATERIALS

Provide as specified in the *GANA Glazing Manual*, SIGMA TM-3000 and SIGMA TB-3001, and per manufacturers recommendations.

C101007 INTERIOR GLAZING

ASTM C 1036, unless specified otherwise. Provide patterned glass where required to obscure view into bathrooms and dressing rooms.

Provide setting and sealing materials, stops and gaskets as recommended by the glass or acrylic sheet manufacturer.

Glazing thickness indicated in the following paragraphs is the minimum acceptable thickness. Provide thicker glazing if required by the code or the manufacturer for the given application.

C101007 1.1 GLASS

C101007 1.1.1 Clear Glass

Type I, class I (clear), quality q4 or q5 for patterned glass.

C101007 1.1.2 Wire Glass

Provide glazing of Type II, Class I, Form I, Quality q8 mesh stainless steel, diamond pattern, 1/4 inch (6.35 mm) thick. Glass shall comply with ASTM E 163.

C101007 1.1.3 Patterned Glass

Type II, Class 1 (translucent), Form 3 (patterned), quality q7 (decorative), Finish f2 (patterned two sides), 1/8 inch (3.2 mm).

C101007 1.1.4 Laminated Glass

Fabricate from two pieces of Type I, Class 1, quality q3 glass laminated together with a clear, 0.030 inch (0.75 mm) thick polyvinyl butyral interlayer. Total thickness shall be nominally 1/4 inch (6.35 mm).

C101007 1.1.5 Bullet-Resistant Glass

Provide bullet resistant composite glazing panel listed by UL ABPMED with a power rating corresponding to the installation prescribed, and in accordance with UL 752.

C101007 1.1.6 Tempered Glass

ASTM C 1048, Kind FT (fully tempered), Condition A (uncoated),

Type I, Class 1 (clear), quality q3.

C101007 1.2 PLASTIC GLAZING

C101007 1.2.1 Bullet-Resistant Plastic Sheet

Bullet resistant rating in accordance with UL 752, Class I, clear in color. Only use bullet-resistant plastic sheet on existing interior windows that cannot be removed and replaced.

C101007 1.2.2 Polycarbonate Sheet

ANSI Z97.1, Mar-resistant, Clear and smooth both sides when used for vision glazing; Translucent, textured both sides when used for obscure glazing. Mar-resistant sheet shall have a change in haze of between 5 and 8 percent under silica carbide test, 1600 grams, ASTM D 673.

Provide warranty for polycarbonate sheet glazing for a period of 5-years that includes the following:

a. Warranty Type I, Class A (UV Stabilized) sheets against breakage;
b. Warranty Type III (coated and mar-resistant) sheets against breakage and coating delamination.
c. Warranty Type IV (coated sheet) against breakage and yellowing

C101008 INTERIOR JOINT SEALANT

Sealant joint design and application shall be in accordance with the general requirements of *Sealants: A Professionals' Guide*from the Sealant, Waterproofing & Restoration Institute. Refer to manufacturers' recommendations for chemical resistance.

C101008 1.1 JOINT SEALANT TYPES FOR INTERIOR WORK

Sealants shall be paintable, and shall match the color of adjacent surfaces.

a. Vertical Surfaces - ASTM C 920, Type M, Grade NS, Class 25, Use NT.
b. Horizontal Surfaces - ASTM C 920, ASTM D 1190 for traffic surfaces, Type M, Class 25, Use T.
c. Pools and pool decks – for vertical joints, Gun grade: ASTM C 920, Type M, Grade NS, Class 25, NT; for horizontal deck traffic joints pourable: ASTM C 920, Type M, Grade P, Class 25, T
d. Food Service – Use a Vinyl Acetate Homopolymer, or other low VOC, non-toxic sealant approved for use in food preparation areas.
e. Chemical Resistance - Ensure that all sealants are chemically compatible or resistant to adjacent materials, or materials that may come into contact with the sealants in the course of the building life.

C1020 INTERIOR DOORS

Door hardware shall be as specified in "Interior Door Hardware" in this section.

C102001 STANDARD INTERIOR DOORS

This paragraph covers all standard interior wood or hollow metal doors with frames, hardware, locks, and finish.

C102001 1.1 STEEL DOORS

Hardware preparation shall be in accordance with SDI 17, ANSI/DHI A115 and ANSI/SDI 100. Doors shall be hung in accordance with ANSI/SDI 100.

C102001 1.1.1 Standard Steel Doors

ANSI A 250.8, Level 1, (occasional use, low abuse types such as closet doors without locks); Level 2, (low use, moderate abuse types such as office/storeroom doors); Level 3, (moderate use, high abuse types such as BEQ sleeping room doors); Level 4, (high use, high abuse types such as corridors, stairways, assembly spaces, and main entry doors), with a physical performance level of 'A'. Maximum door undercut shall not exceed 3/4 inch (19 mm).

C102001 1.1.2 Sound Insulated Doors and Frames

Provide sound insulated door and frame assemblies into rooms requiring wall assemblies to be sound insulated with a Sound Transmission Class (STC) rating as required. The STC rating for the door and frame assembly shall be not less than the wall assembly STC rating.

C102001 1.1.3 Accessories

a. Shelves for Dutch doors shall comply with SDI 111-B, and be of steel not lighter than 16 gage.
b. Louver shall comply with SDI 111-C, shall be stationary, sight-proof type. Use lightproof louvers if function of room requires darkness. Louver frames shall be 20-gage steel with louver blades minimum 24 gage.

C102001 1.2 STANDARD STEEL FRAMES

ANSI A 250.8. Form frames with welded corners for installation in masonry partitions and knock-down field assembled corners for installation in metal stud and GWB partitions. Frames shall be set in accordance with SDI 105. Form stops and beads with 20 gauge steel.

Provide a minimum of three jamb anchors and base steel anchors per frame, zinc-coated or painted with rust-inhibitive paint, not lighter the 18 gauge. Secure frames to previously installed concrete or masonry with expansion bolts in accordance with SDI 11-F. Provide mortar infill of frames in masonry walls, and gypsum board compound infill at each jamb anchor in metal frame walls.

C102001 1.3 FINISHES

a. Factory-Primed Finish. Doors and frames in non-humid, non-corrosive environments shall be factory primed with a rust inhibitive coating as specified in ANSI A 250.8. Factory prime doors on six sides of the door.
b. Zinc-Iron Alloy Coating (Galvanealed) and Factory Primed Finish
c. Fabricate interior doors and frames (for installation in such rooms as kitchens, laboratories, battery charging, utility rooms and humid areas such as shower/drying areas, areas with frequent floor mopping, or corrosive chemical atmospheres) from zinc coated steel, alloyed type, complying with ASTM A 653/ A 653M. Factory prime doors and frames as specified in ANSI A 250.8.
d. Manufacturer’s primer shall be compatible with door finish system in C30, Interior Coatings.

C102001 1.4 WOOD DOORS

C102001 1.4.1 Wood Doors and Frames

Install wood doors and frames according to workmanship requirements of the Architectural Woodwork Institute Quality Standard 900-T-4 Custom Grade. Wood door frames may only be used in residential construction.

For non-residential buildings provide extra-heavy doors for stairways, building entrances, corridors, assembly spaces, and other high use interior doors. Provide heavy duty doors for other non-residential locations and for residential buildings.

Wood doors shall be solid wood doors with wood core and solid wood edge bands. Vertical edge bands shall be one piece or laminated two-piece solid lumber to match face veneer species for natural finish wood doors. Reinforce door at all hardware attachments to door with sound grade hardwood. Horizontal edge bands shall be solid wood or structural composite lumber.

a. Stile and Rail Doors Provide premium or select grade Ponderosa pine, Douglas Fir, White Pine, or Yellow Poplar stile and rail doors conforming to WDMA I.S.6A-01. Doors shall be premium grade, heavy duty or as required by the project program.
b. Interior Flush Doors - Flush doors shall conform to WDMA I.S.6A-01. Doors shall be premium grade, heavy duty, or otherwise as required by the project program. Provide WDMA I.S. 1A-04 SCLC-5 structural composite lumber core, or staved lumber core, or PC-5 particleboard core construction. Do not use particleboard cores where it is anticipated that hardware may be screw mounted to the doors. Provide hardwood or softwood veneers cut for the best presentation for natural finishing of doors. Set match veneers of all components of a door opening. Face veneers shall be 1/20" thick

before sanding.

c. Closet Doors – Provide flush, paneled, or louvered doors of premium or custom grade, conforming to WDMA I.S.1A-01, premium or custom grade, heavy duty. Doors shall be hinged or sliding.

d. Acoustical Doors and Frames - WDMA I.S 1-A-2004 WDMA I.S.6A-01. Doors shall be premium or custom grade, heavy duty as required by the project program. Provide acoustical doors in solid core, constructed for door, hardware, and frame to provide a Sound Transmission Class (STC) rating of 39 (minimum) when tested in accordance with ASTM E 90.

C102001 1.4.2 Wood Door Accessories

a. Door Louvers - Louver shall comply with SDI 111-C. Louver frames shall be 20-gage steel with louver blades minimum 24 gage.

b. Door Light Openings - Provide glazed openings with the manufacturer's standard wood moldings. Moldings for doors to receive a natural finish shall be of the same species and color of the face veneer.

C102001 1.4.3 Fabrication

a. Marking - Each door shall bear a stamp, brand or other identifying mark indicating quality and construction of the door.

b. Adhesives and Bonds - WDMA I.S. 1-A. Use Type I (water-proof) adhesive for assembly of interior doors and for the fabrication of stiles, rails, crossbands, and veneers. Adhesive for doors to receive a natural finish shall be non-staining. Type II (water resistant) is allowed for fabrication of core parts.

C102001 1.4.4 Finishes

Unless required otherwise by the project program, typically provide natural finish wood doors. Factory prime and or seal on all six sides of doors.

a. Factory Finish - Provide doors finished at the factory as follows: AWI Quality Standards Section 1500, specification for Conversion varnish, alkyd urea catalyzed polyurethane, or acrylated UV curable epoxy. The coating shall be AWI Quality Standards premium, medium rubbed sheen, with an open or closed grain effect. Poly-wrap prefinished wood doors at factory for shipping.

b. Field Finish - Prepare doors in accordance with WDMA I.S.1-A-2004. Factory prime or seal doors. Manufacturer's primer or sealer shall be compatible with door finish system in Section C30, *Interior Finishes*.

c. Plastic Laminate Finish - Factory applied, NEMA LD 3, 0.050 inch (1.27 mm) minimum thickness.

C102002 GLAZED INTERIOR DOORS

This paragraph covers all glazed interior doors with glass, frames, hardware and locking devices. See paragraph entitled "Interior Glazing" in this section for glazing options.

C102002 1.1 ALUMINUM DOORS, FRAMES AND STOREFRONT

Provide swing-type aluminum doors and frames complete with framing members, transoms, side-lites, and accessories. Fabricate of ASTM B 221, Alloy 6063-TS for extrusions.

C102002 1.2 FABRICATION

C102002 1.2.1 Aluminum Frames

Provide frames with removable glass stops and glazing beads to accommodate fixed glazing. Countersink screws for exposed fastenings. Jointing of framing members shall obtain hairline fit, be reinforced, and mechanically secured.

C102002 1.2.2 Aluminum Doors

Doors shall be not less than 1-3/4 inches (44 mm) thick, with a minimum wall thickness of 0.125 inch (3.2 mm), except beads and trim, 0.050 inch (1.27 mm). Full glazed stile and rail doors shall have medium or wide stiles and rails. Maximum water leakage of the door and frame shall be "no uncontrolled water penetrating systems or appearing on systems' normally exposed interior surfaces from sources other than condensation." Water controlled by flashing and gutters that is drained to exterior and cannot damage adjacent materials or finishes is not considered water leakage.

C102002 1.2.3 Welding and Fastening

Locate welds and fasteners on unexposed surfaces, where possible. Exposed welds shall be dressed smoothly. Exposed fasteners shall have counter-sunk heads. Weld concealed reinforcements for hardware in place. Hardware reinforcements shall be of stainless steel or steel with a hot-dipped galvanized finish, and shall be secured with stainless steel screws.

C102002 1.2.4 Finishes

Provide exposed aluminum surfaces with factory finish of anodic or organic coating. Anodic coatings shall conform to AA 45, with an Architectural Class I finish, 0.7 mil or thicker. Organic coatings shall be a baked enamel finish in accordance with AAMA 2605 with a total dry film thickness not less than 1.2 mil. Exposed fasteners to match the door finish.

C102003 FIRE DOORS

This paragraph covers all interior fire doors, including all necessary frames, hardware, closing devices, and alarms associated with the door.

C102003 1.1 FIRE AND SMOKE DOORS AND FRAMES

Provide in conformance with NFPA 80 an NFPA 105. Fire doors and frames shall bear the label of UL, FM or WHI attesting to the rating required. Door and frame assemblies shall be tested for conformance per NFPA 252 or UL 10C (for positive pressure). Wood fire doors shall also comply with ASTM E 152.

Provide stainless steel astragals complying with NFPA 80 for fire-rated assemblies and NFPA 105 for smoke control assemblies.

C102004 SLIDING AND FOLDING DOORS

Provide paneled or louvered closet doors of premium or custom grade, conforming to WDMA I.S.6A-01, heavy duty. Doors shall be sliding or bi-folding, as required by the program.

C102005 INTERIOR OVERHEAD DOORS

Refer to RFP PART 4, B20 Exterior Enclosure - "Overhead Roll-Up and Overhead Sectional Doors" for interior overhead door requirements. Design for ASCE 7 wind loading not required for interior overhead doors.

C102006 INTERIOR GATES

Any special type gate installed in the interior of a facility, including frames, hardware, hoisting devices, finish, and other associated work.

C102007 INTERIOR DOOR HARDWARE

C102007 1.1 DOOR HARDWARE

Provide the services of an Architectural Hardware Consultant (AHC), Certified Door Consultant (CDC), or an Electrified Hardware Consultant (EHC) to assist the Designer of Record in preparation of the door hardware schedule and product selection. The hardware consultant shall sign and seal the door hardware construction submittal. Provide, as far as feasible, locks, hinges, pivots, and closers from one lock, hinge, pivot, or closer manufacturer's make. All door hardware shall be clearly and permanently marked by the manufacturer, on a location to be visible after installation. Modify hardware as necessary to provide features indicated or specified. For necessary hardware items not indicated in these specification sections, provide ANSI/BHMA grade 1 rated hardware.

C102007 1.1.1 Hardware for Fire Doors

All hardware provided shall meet the requirements of NFPA 80 for Fire Doors and NFPA 101 for exit doors. Hardware shall bear the label of Underwriter's Laboratories, Inc., and be listed in UL BMD or labeled and listed by another testing laboratory

acceptable to the contracting officer. Comply with NFPA 105 for smoke control assemblies.

C102007 1.1.2 Hinges

BHMA A156.1, Grade 1, 4-1/2 x 4-1/2 inches (108 x 108 mm) with non-removable pin or anti-friction bearing hinges.

C102007 1.1.3 Locks and Latches

For non-residential buildings use Series 1000, Operational Grade 1, Security Grade 2 for stairways, building entrances, corridors, assembly spaces, and other high use interior doors. Use Series 4000, Grade 1 for non-residential locations not using Series 1000 hardware. For residential buildings use Series 4000, Grade 2 for interior doors.

a. Mortise Locks and Latches - BHMA A 156.13, Series 1000, Operation Grade 1, Security Grade 2.
b. Bored Locks and Latches - BHMA A 156.2, Series 4000, Grade 1, or Grade 2.

C102007 1.1.4 Combination Locks

BHMA A 156.2. Heavy-duty, mechanical combination lockset with 5 pushbuttons, standard-sized knob or lever, 3/4-inch (19 mm) deadlocking latch, 2-3/4 inch (70 mm) back-set. Provide deadbolt key override option. Safelock, Simplex, and Venn are acceptable manufacturers. Provide a hardware grade equivalent to Grade 1, series 4000. Provide a 5-year parts and labor warranty.

A door into a sensitive area shall be fitted with a FF-L-2740A X-09 Heavy-duty, combination Electromechanical Deadbolt lock for pedestrian doors, with a drill resistant dial ring mounting plate, 2-3/4 inch (70 mm) back-set, with Automatic Lock Reset, High-Security combination scramble, and resistant to all forms of external manipulation and environmental attack. KABA-MAS is the acceptable manufacturer. Three Modes of Operation: 1) The Single Combination Mode allows access by dialing a six-digit combination. 2) The Dual Combination Mode allows access only when two separate codes are entered within 10 seconds of one another. 3) The Supervisory/Subordinate Mode allows access by a subordinate only after a supervisor code has been entered. Audit Feature: Lock shall have a full compliment of auditing features, including non-resettable openings log, and unsuccessful attempts log (audits after 3 unsuccessful attempts) that resets once the proper access code is entered. Lock shall generate its own electrical energy with each turn of the dial, with no batteries or wires required. Lock shall be designed to fit industry standard door mounting pattern.

C102007 1.1.5 Card Key System

Provide card key type access units for specialized entries as required by the program. Provide lithium battery powered,

magnetic stripe keycard locksets that are ANSI/BHMA A156.13, Series 1000, Grade 1, mortise or ANSI/BHMA A156.2, Series 4000, Grade 1, cylindrical locks, tamper resistant, UL listed with 1 inch (25 mm) throw deadbolt, 3/4-inch (19 mm) throw latch bolt, auxiliary dead-locking latch, and 2-3/4 inch (68.75 mm) backset. The latch bolt and the dead bolt shall be operated simultaneously by rotating inside lever. Locks with mechanical override lock cylinders are not acceptable. Locks shall be operated only by a correctly encoded keycard. Use of a newly issued keycard automatically re-keys the lock and voids the previous keycard. The lock shall re-lock immediately after outside lever is turned and latch retracted. Locks shall have memory that is capable of recording up to 140 entries into each room, identification of the keycard used to access the room, the date and time of entry. Entry information of the lock shall be retrievable by a data key that can be inserted into the lock and then taken to the front desk printer to display information. Other components that are required for this system at the front desk are a personal or laptop computer, printer and encoder to program each key.

For exit device locks with card key access, provide mortise type, narrow stile exit devices with 24 volt DC, solenoid option for card key exterior access at aluminum storefront doors. Provide mortise type exit devices with 24 volt DC, solenoid option with alarm and remote exterior access for card key access at insulated hollow metal doors. The alarmed exit device shall sound when exiting only.

System shall be capable of accepting a minimum of 12 keycard access levels, security auditing and computer interfacing with the existing or new management system. Provide a single point of contact customer service representative accessible by telephone with a 10-digit telephone number without additional dialing hierarchies except that a maximum 4-digit extension is permissible. On-site service shall be provided within 3 hours from request within the first 12 months of occupancy. Provide a 5-year parts and labor warranty.

C102007 1.1.6 Exit Devices

BHMA A 156.3, Grade 1. Touch bars shall be provided in lieu of conventional crossbars and arms. Use manufacturer's integral touch bars in aluminum storefront doors.

C102007 1.1.7 Cylinders and Cores

Provide cylinders and cores for new locks, including locks provided under other sections of this specification. Cylinders and cores shall have seven pin tumblers. Cylinders shall be products of one manufacturer, and cores shall be the products of one manufacturer. Rim cylinders, mortise cylinders, and knobs of bored locksets shall have interchangeable cores, which are removable by special control keys. Stamp each interchangeable core with a key control symbol in a concealed place on the core.

C102007 1.1.8 Keying System

Provide a master key system for the facility unless more than one tenant/tenant command shall reside in a facility. Provide a grand master keying system, or great, grand master keying system if multiple tenants or multiple buildings are required. Provide an extension of the existing keying system for existing facility additions. Name the manufacturer of the existing locks, and indicate if they have interchangeable cores. Provide construction interchangeable cores when subcontractors require keys during construction.

The Contractor shall coordinate a keying system meeting. The Contractor's Project Manager, Superintendent, Hardware Subcontractor, Electrical Subcontractor (if keying hardware is electric), Designer of Record, Contracting Officer, Public Works Base Hardware Specialist, and the Using Activity shall attend this meeting to establish the keying system for the project. This meeting is intended to identify base limitations, the necessary security, and access control within the facility. The meeting shall produce a marked up copy of the floor plan indicating the doors to receive locks and the doors to be keyed together, and any master keying or grand master keying

C102007 1.1.9 Keys

Furnish one file key, one duplicate key and one working key for each key exchange and for each master and grand master keying system.

C102007 1.1.10 Key Cabinet and Control System

BHMA A 156.5 Provide key cabinet with 25% more key hooks than required for interior and exterior doors.

C102007 1.1.11 Lock Trim

Cast, forged or heavy wrought construction and commercial plain in design.

a. Knobs and Roses - Knobs and roses shall meet test requirements of BHMA A 156.2 and BHMA A 156.13.
b. Lever Handles - Provide lever handles in lieu of knobs, as required by DoD ABAAS. All lever handles shall have the freewheeling feature.

C102007 1.1.12 Door Bolts

BHMA A 156.16. Provide automatic latching flush bolts for double doors with both door leafs active, BHMA A 156.3, Type 25.

C102007 1.1.13 Closers

BHMA A 156.4, Series C02000, Grade 1, with PT 4C, 1-1/2 inch piston, heavy duty forged arm, with full size cover.

C102007 1.1.14 Overhead Holders

BHMA A 156.8, Grade 1.

C102007 1.1.15 Closer Holder-Release Devices

BHMA A 156.15, Grade 1.

C102007 1.1.16 Door Protection Plates

Provide armor, mop, and kick plates conforming to BHMA A 156.6. Provide door kick plates on all doors with closers and doors leading to corridors or circulation spaces. Provide armor plates on all doors that receive cart traffic. Provide mop plates on all doors in rooms that have a mop-able floor finish.

C102007 1.1.17 Door Stops and Silencers

BHMA A 156.16, Type L03011, three per single door and four per double door.

C102007 1.1.18 Thresholds

BHMA A 156.21.

C102007 1.1.19 Door Gasketing

BHMA A 156.22. Use light-proof gasketing for room functions that require darkness and integral sound-proof gasketing on acoustically rated doors.

C102007 1.1.20 Finishes

Provide one of the following hardware finish systems, matching the exterior hardware finish system.

a. BHMA A156.18. Hardware shall have BHMA 630 finish (satin stainless steel), unless specified otherwise. Provide items not manufactured in stainless steel in BHMA 626 finish (satin chromium plated) over brass or bronze, except surface door closers which shall have aluminum paint finish, and except steel hinges which shall have BHMA 652 finish (satin chromium plated). Hinges for exterior doors shall be stainless steel with BHMA 630 finish or chromium plated brass or bronze with BHMA 626 finish. Exit devices may be provided in BHMA 626 finish in lieu of BHMA 630 finish except where BHMA 630 is specified under paragraph entitled "Hardware Sets". Exposed parts of concealed closers shall have finish to match lock and door trim. Hardware for aluminum doors shall be finished to match the doors.
b. BHMA A156.18. Hardware shall have BHMA 612 finish (satin bronze), unless specified otherwise. Surface door closers shall have bronze paint finish. Steel hinges shall have BHMA 639 finish (satin bronze plated). Exposed parts of concealed closers shall have finish to match lock and door

trim. Hardware for aluminum doors shall be finished to match the doors. Hardware showing on interior of bathrooms, shower rooms, toilet rooms, washrooms, laundry rooms, and kitchens shall have BHMA 629 finish (bright stainless steel) or BHMA 625 finish (bright chromium plated).

C102090 OTHER INTERIOR SPECIALTY DOORS

C102090 1.1 ACCESS DOORS

Provide manufactured access doors and frames of 16-gage steel minimum with concealed pivots or a continuous piano hinge and flush stainless steel cam latch. Finish with manufacturer's standard primer coat finish and paint to match the wall or ceiling unless a stainless steel finish is required in the Project Program. Provide UL Rated access doors in fire rated assemblies. Access panels located in furred wall spaces shall have an inserted material to match adjacent wall surface. Size access doors large enough to allow convenient hand and tool access and operation of controls and equipment beyond the door. If maintenance of controls or equipment beyond the door requires removal, size access door to allow removal and reinstallation of new equipment through the access door. Provide access panels capable of receiving finish material inserts in visible wall locations of habitable spaces.

C102091 OTHER INTERIOR PERSONNEL DOORS

Interior personnel doors not described by the assembly categories listed above.

C1030 SPECIALTIES

C103001 COMPARTMENTS, CUBICLES AND TOILET PARTITIONS

This paragraph covers assemblies for individual compartments, cubicles, toilet partitions and urinal screens.

C103001 1.1 TOILET PARTITIONS

FS A-A-60003. Provide toilet compartments at multi-fixture toilet rooms of Type I, Style B-Ceiling Hung, C-Overhead Braced, or F-Overhead braced-alcove. Reinforce panels to receive partition-mounted accessories. Steel and Plastic toilet partitions shall have a recovered materials content of 20 to 30 percent.

C103001 1.2 URINAL SCREENS

FS A-A-60003. Type III, Style A, floor supported and wall hung or Style D, wall hung. Wall hung urinal screens shall be secured with continuous flanges to urinal screen and wall.

C103001 1.3 HARDWARE AND FITTINGS

Chrome-plated or stainless steel door latches and coat hooks. Provide one coat hook per compartment door. Latches and hinges for handicapped compartments shall comply with DoD ABAAS.

C103001 1.4 FINISHES

Finishes shall comply with FS A-A-60003. Use only one type of partition per building.

a. Metal toilet partitions and urinal screens shall be made of stainless steel.
b. Solid plastic partitions shall be fabricated of polymer resins (polyethylene) formed under high pressure forming a single component section one inch thick. Color shall extend throughout the panel thickness.
c. Phenolic core panels.
d. Laminated plastic partitions are acceptable in low or limited use applications (one or two toilet stalls per toilet room).

C103002 TOILET AND BATH ACCESSORIES

This paragraph covers toilet and bath accessories including, but not limited to, soap dispensers, paper holders, towel receptacles, grab bars, and bathroom mirrors.

C103002 1.1 TOILET AND BATH ACCESSORIES

C103002 1.1.1 Toilet Tissue Dispensers

Provide surface or recessed mounted dispensers fabricated of stainless steel. Provide one horizontally or vertically mounted double-roll dispenser per toilet compartment, unless otherwise indicated.

C103002 1.1.2 Paper Towel Dispensers

Provide one per pair of sinks in toilet rooms without electric hand dryers, and one per room with electric hand dryers, unless otherwise indicated. Provide surface or recessed mounted towel dispenser constructed of a minimum 0.7mm 0.03 inch Type 304 stainless steel.

C103002 1.1.3 Combination Paper Towel Dispenser / Waste Receptacle

Provide a recessed or semi-recessed type with a capacity of 400 sheets of C-fold, single-fold, or quarter-fold towel and be constructed of 22-gage stainless steel. Provide one per pair of sinks, unless otherwise indicated. Provide the towel compartment door with a tumbler key lock locking mechanism.

C103002 1.1.4 Sanitary Napkin Disposal Units

Units shall be toilet partition or wall mounted of not less than 22 gage stainless steel, with top and bottom hinged access doors. Provide one in each Woman's toilet stall, unless otherwise indicated. Each unit shall have leak-proof receptacle for disposable liners. Provide fifty disposable liners of the type standard with the manufacturer.

C103002 1.1.5 Medicine Cabinets

Provide units with plate or float glass mirrors on doors. Provide doors and frames of 16-gage steel with a continuous piano hinge and flush magnetic latch.

C103002 1.1.6 Towel Bars

Provide stainless steel towel bars with a minimum thickness of 0.015 inch (0.4 mm).

C103002 1.1.7 Grab Bars

Provide stainless steel grab bars per DoD ABAAS.

C103002 1.1.8 Robe Hooks

Provide stainless steel two-hook shape with integral wall flange, with a projection not less than 1-5/8 inches (41 mm).

C103002 1.1.9 Mirrors

Provide one manufactured framed electro-copper plated mirror per sink, or one full-size mirror for all sinks, unless otherwise indicated.

C103002 1.1.10 Soap Dispensers

Provide one soap dispenser per two sinks, with mechanical action dispensing valve. Do not mount soap dispenser on mirror. Surface mounted liquid type shall consist of a vertical Type 304 stainless steel tank with holding capacity of 1.2L (40 fluid ounces) with a corrosion-resistant all-purpose valve.

C103002 1.1.11 Electric Hand Dryer

Provide wall mount and electric hand dryer designed to operate at 110/125 volts, 60 cycles, single phase alternating current with a heating element core rating of a maximum 2100 watts. Provide dryer housing of single piece construction and of chrome plated steel. Provide one unit per three sinks, unless otherwise indicated.

C103003 MARKER BOARDS AND TACK BOARDS

This paragraph covers all marker boards, tack boards and fastening devices.

C103003 1.1 MATERIALS

a. Porcelain Enamel - Marker board writing surface shall be composed of porcelain enamel fused to a nominal 28 gage thick steel sheet, laminated to a 1/4-inch (6.35 mm) thick core material with a steel or foil backing sheet.
b. Cork shall be a continuous resilient sheet made from soft, clean, granulated cork, relatively free from hardback and dust and bonded with a binder suitable for the intended purpose. The cork

sheet shall have a tensile strength of not less than 40 PSI (275.8 kPa) when tested in accordance with ASTM F 152.

c. Tack-board Covers - Provide woven fabric or vinyl wall covering over cork tack surface.
d. Aluminum - Aluminum frame extrusions shall be alloy 6063-T5 or 6063-T6, conform to ASTM B 221, and be a minimum of 0.06 inches (1.5 mm) thick.
e. Hardwood - Exposed hardwood for frames, cabinets and cases shall be oak, walnut or mahogany, with a factory applied stain and lacquer finish.
f. Glass - Provide tempered glass in accordance with ANSI Z97.1 and in conformance with ASTM C 1048.

C103003 1.2 PRESENTATION BOARD

The presentation board shall be a laminate covered wall-hung cabinet with lockable doors. Doors are to be attached to the cabinet with continuous piano hinges, and have a catch or closure to keep doors closed when not in use. The interior of the cabinet shall contain a porcelain enamel marker board writing surface with chalk-tray, a flip chart that can be hung on an interior door panel, and fabric covered tack surface on the interior door panels.

a. Marker Board - Marker board shall be a factory assembled, one-piece unit, and have a 28 gauge nominal steel porcelain enamel writing surface and a chalk-tray with end closure. Frame shall be aluminum, powder-coated steel, oak, walnut or mahogany.
b. Tack Board - Tack boards shall consist of a minimum 1/4-inch (6.35 mm) thick natural cork laminated to a minimum 1/4-inch (6.35 mm) thick hardboard, shall have an oak or aluminum frame, and be vinyl or fabric covered. Covers shall have a Class 'A' flame spread rating of 0-50, and a smoke developed rating of 0-450 in accordance with ASTM E 84.

C103004 IDENTIFYING DEVICES

This paragraph covers all signs, plaques, and traffic markers.

C103004 1.1 ASSEMBLIES

The signage system assemblies shall consist of three primary elements; a structural rail (with coordinating rail joiners to increase sign height in the field), removable copy inserts, and interlocking end caps or frame, and trim.

C103004 1.1.1 Inserts

The signage rails shall be designed as to accept ABS plastic signage inserts.

C103004 1.1.1.1 Insert Fabrication

The insert is the signage member to which message signage copy in the form of letters, numbers, and symbols shall be

applied, and shall be interchangeable with similar sized rails of any other sign of equal or greater width and height. The ends of the rail and insert assembly shall be enclosed by end caps of prefinished 6064T5 extruded aluminum. Inserts shall be fabricated from 0.090 minimum ultra-violet resistant thickness extruded ABS Acrylic sheet core with 20.003 polycarbonate non-glare clear cap bonded to the core during the extrusion texturing process.

C103004 1.1.2 End Caps

End caps shall be injection-molded ABS plastic with integral color. The end caps shall be interchangeable to either end of each sign type, and any other similar sign of equal height. The end caps shall be interlocking mechanically with the inserts, and rail, requiring no tools for assembly. End caps shall utilize straight corners (instead of radius corners). Spring clips shall be steel. Plastic spring clips are not acceptable.

C103004 1.1.3 Trim

Optional accessory top and bottom trim frames of prefinished (color as indicated 6063T5 extruded aluminum shall be provided to the signage types indicated.

C103004 1.1.4 Mounting

Mounting of the modular signage system shall include surface mounting with screw-on applications for interior and exterior walls and on selected doors as indicated, at the locations indicated, and other mounting devices as indicated.

C103004 1.1.5 Graphics Application

a. Tactile Letters and Symbols

Chemically weld tactile letters and symbols to front surface of signage inserts where indicated and where required by DoD ABAAS. Tactile letters and symbols shall be sized as indicated.

b. Braille

Grade II Braille. Provide Grad II Braille inlaid strip as indicated to match sign color.

C103004 1.2 ALUMINUM ALLOY PRODUCTS

Provide ASTM B 209 for aluminum sheet or plate, ASTM B 221 for aluminum extrusions and ASTM B 26/B 26M or ASTM B 108 for aluminum castings. Provide aluminum extrusions at least 1/8-inch (3.2 mm) thick and aluminum plate or sheet at least 16 gage thick. Provide aluminum castings of solid aluminum cast certified by AA 46 alloy designation B443.0. Where anodic coatings are specified, alloy shall conform to Aluminum Association’s alloy designation 514.0 or A514.0.

C103004 1.2.1 Aluminum Finishes

Provide exposed aluminum finishes with either mill finish, factory finished with anodic coating or organic coating. Anodized finishes shall conform to AA 45, Architectural Class I or II, with a coating thickness 0.7 mil or thicker. Organic coatings shall be a baked enamel finish with a dry film thickness not less than 1.2 mils, conforming to AAMA 605.2.

C103004 1.3 STEEL PRODUCTS

Provide ASTM A 36/A 36M for structural steel, ASTM A 167 for sheet and plates.

C103004 1.4 CAST METAL

a. Cast Aluminum, ASTM B 108
b. Cast Bronze, ASTM B 62

C103004 1.5 GLASS

ASTM C 1036, Type 1, Class 1, Quality q3

C103004 1.6 FIBER-REINFORCED POLYESTER (FRP)

ASTM D 3841, Type II, Grade 1

C103004 1.7 ACRYLIC SHEET

ASTM D 4802, Type III

C103004 1.8 POLYCARBONATE SHEET

SAE AMS 3611

C103004 1.9 EXTERIOR POST AND PANEL SIGNS

C103004 1.9.1 Posts and Panels

Provide one-piece extruded aluminum posts with not less than 0.125 inch (3.2 mm) wall thickness. Posts shall permit attachment of panel framing system. Provide cap for each post. Panel framing system shall consist of aluminum extrusions and interlocking track components designed to interlock with concealed fasteners. Panels shall be fabricated of rectangular extruded tubular aluminum with a minimum wall thickness of 0.125 inches. Panels shall be removable and interchangeable. Posts shall be embedded in solid concrete foundation.

C103004 1.9.2 Illumination

Provide concealed lighting within panel framing members. Provide T-12 slim-line lamps,. Ballast shall be integrally mounted with high power factor and rated for use in up to minus 20 degrees F (minus 29 degrees C) ambient starting temperature.

C103005 LOCKERS

C103005 1.1 STEEL CLOTHING LOCKERS

C103005 1.1.1 FS AA-L-00486 (Rev J), enameled steel.

Provide ventilated, Single Tier Units (unless multi-tier permitted by Project Program), fully framed. Provide galvanized or galvaneal shelves and bottoms for all lockers, and fully galvanized or galvaneal lockers in locker spaces adjoining shower rooms. Provide full height door stiffeners.

C103006 SHELVING

Assemblies include all types of shelving with brackets and all supporting materials and finish, if required.

C103007 FIRE EXTINGUISHER CABINETS

Cabinet shall be constructed of 16 gauge cold-rolled steel door panel / front, and a 22 gauge cold-rolled steel tub. Cabinet shall be fire-rated if located in a fire rated wall assembly, and have a full-length piano hinge, and baked enamel finish. Provide a stainless steel cabinet door if cabinet is exposed to the environment. Size and locate fire extinguisher cabinets to encase extinguisher as required by NFPA 10 & 101.

C103008 COUNTERS

C103008 1.1 LAMINATE COVERED COUNTER TOPS

Fabricate with lumber and a core of exterior grade plywood (A-C Grade) or particleboard (ANSI A208.1, Grade 1-M-2 or better), glued and screwed to form an integral unit. Bond laminated plastic under pressure to exposed surfaces using manufacturer’s recommended glue.

a. Countertops shall be constructed to meet "Custom" quality grade as defined in AWI Quality Standards.
b. Finish shall meet NEMA LD 3, Grade PF 42 for plastic laminate.

C103008 1.2 ACRYLIC COUNTER TOPS

Provide 100% acrylic counter tops for use in non-residential construction.

Solid surfacing material shall consist of 100% pure acrylic polymer, mineral fillers, and pigments. The material shall be homogenous, not coated or laminated. Superficial damage to a depth of 0.010 inch (.254 mm) shall be repairable by sanding or polishing. Install with factory recommended fasteners/adhesives/sealant. Provide the following performance characteristics:

a. Tensile strength, ASTM D 638: 5800 psi minimum
b. Hardness, ASTM D 2583: Barcol Impressor 55 minimum
c. Flammability, ASTM E 84: Class I/A, flame spread 25 maximum; smoke developed 30 maximum

d. Thermal Expansion, ASTM D 696:.00002 in/in/F maximum
e. Boiling water resistance, NEMA LD 3: No effect
f. High temperature resistance, NEMA LD 3: No effect
g. Liquid absorption, ASTM D 570 (24 hours): 0.10 percent maximum
h. Mold and mildew growth, ASTM G 21: No growth, no effect
i. Bacteria growth, ASTM G 22: No growth, no effect
j. Sanitation, NSF 51: "Food Contact" approval for food area applications
k. Impact resistance, NEMA LD 3 (1/2 lb. ball drop): 1/4 inch material, 36 inch drop, no failure 1/2 inch material, 120 inch drop, no failure

C103009 CABINETS

This paragraph includes casework items that are permanently fixed in-place. Included are all cabinetry and millwork items with their associated accessories and anchoring devices.

C103009 1.1 WALL AND BASE CABINETS

Wall and base cabinets shall be of the same construction and appearance, with solid ends and frame fronts, or with frames all around. Frames shall be not less than 3/4 inch by 1 1/2 inches (19 mm by 38 mm) hardwood. All ends, bottoms, backs, and partitions shall be hardwood plywood. Cabinet doors and drawer fronts shall be a minimum 3/4 inch (19 mm) of either plywood or medium density fiberboard cores with solid edge bands.

C103009 1.1.1 Quality Standards

Wall and base cabinets shall be constructed to meet "Custom" quality grade as defined in AWI Quality Standards, except where this specification exceeds AWI Custom.

C103009 1.1.2 Hardware

Provide cabinet hardware including two self-closing hinges for each door and two side-mounted metal drawer slides for each drawer and pulls for all doors and drawers as follows. All cabinet hardware exposed to view shall be ANSI/BHMA 156.9, Grade 1, and comply with the following requirements:

a. Concealed Euro-Style, back mounted hinges with opening to 165 degrees and a self-closing feature at less than 90 degrees.
b. Drawer slides shall have a static rating capacity of 100 lbs. (444 N).
c. Provide adjustable shelving standards with shelf support hardware for wall cabinets.
d. Provide heavy-duty magnetic latch and door and drawer catch

C103009 1.1.3 Finish

Provide plastic laminate (NEMA LD3) or transparent finish with

sealer and varnish as selected by Designer of Record.

C103010 CASEWORK

This paragraph includes all built-in premanufactured metal cabinetry for specialized functions such as labs, libraries, medical and dental facilities. At a minimum, all casework shall conform to the following chart:

Metals	Thickness and Material
Uprights (all)	
Horizontal foot	4" x 2" tube, 14 ga. (.075") HRPO Steel
Vertical upright	6" x 2" tube, 11 ga. (.118") HRPO Steel
Leveler	Threaded steel with plastic foot and rubber boot
Bridge Channels	
Channel (halves)	14 ga. (.075") CQCR Steel
Utility Rails	
Top and Bottom Channels	18 ga. (.047") CQCR Steel
Covers	18 ga. (.047") CQCR Steel
Dividers	16 ga. (.059") CQCR Steel
End Brackets	22 ga. (.030") CQCR Steel
Top Stretchers	
Channel	14 ga. (.075") CQCR Steel
End Brackets	18 ga. (.047") CQCR Steel
Vertical Utility Chase	
Chase Assembly	
Upper Chase Cover	
Cover	16 ga. (.059") CQCR Steel
Middle Chase Cover	
Cover	16 ga. (.059") CQCR Steel
Lower Chase Cover	
Cover	16 ga. (.059") CQCR Steel

Attachment Bracket	11 ga. (.118") CQCR Steel
Chase Cover	
Panel	18 ga. (.047") CQCR Steel
Bridge Cover Extension	
Panel	18 ga. (.047") CQCR Steel
Chase Cabinet Filler	
Panel	18 ga. (.047") CQCR Steel
Cantilever	
Cantilever	11 ga. (.118") HRPO Steel
End Panel	
Outer Cover	11 ga. (.118") HRPO Steel
Inner Cover	20 ga. (.036") CQCR Steel
Angle Bracket	16 ga. (.059") CQCR Steel
Shelves	
Shelf (all)	16 ga. (.059") CQCR Steel
End Panels (all)	14 ga. (.075") CQCR Steel
Reinforcement Channel (Flat and Seismic Flat Shelves)	16 ga. (.059") CQCR Steel
Seismic Shelf Support Lip	20 ga. (.036") CQCR Steel
Laminate Overhead Storage Cabinets	
Hanger bracket	14 ga. (.075") CQCR Steel
Solid door pull	Steel, aluminum or zinc
Glass door pull	Steel
Glass door track	Aluminum
Reinforcing hat channel for shelf	11 ga. (.118") HRPO Steel
Steel Overhead Storage Cabinets	
Sides, Back and Door	20 ga. (.036") CQCR Steel
Top, Bottom and Shelf	18 ga. (.047") CQCR Steel
Hanger bracket	14 ga. (.075") CQCR Steel

Solid door pull	Steel, aluminum or zinc
Glass door pull	Steel
Glass door track	Aluminum
Reinforcing hat channel for shelf	11 ga. (.118") HRPO Steel

Laminate Storage and Sink Cabinets

Drawer glides	Steel rails with ball bearings
Door hinges	Steel
Door and Drawer pulls	Steel, aluminum or zinc
Leveler bracket	11 ga. (.118") HRPO Steel
Leveler	Threaded steel with plastic foot and rubber boot
Reinforcing hat channel for shelf	11 ga. (.118") HRPO Steel

Steel Storage and Sink Cabinets

Sides, Back and Top	20 ga. (.036") CQCR Steel
Base, Bottom and Shelf	18 ga. (.047") CQCR Steel
Door (interior and exterior panels)	20 ga. (.036") CQCR Steel
Drawer glides	Steel rails with ball bearings
Door hinges	Steel
Door and Drawer pulls	Steel, aluminum or zinc
Leveler bracket	11 ga. (.118") HRPO Steel
Leveler	Threaded steel with plastic foot and rubber boot
Reinforcing hat channel for shelf	11 ga. (.118") HRPO Steel

Cord Reel

Cord Reel	11 ga. (.118") HRPO Steel

Cable Storage Tray

Tray	24 ga. (.024") CQCR Steel

Phenolic Drying Rack

Mounting brackets, in-line	14 ga. (.075") CQCR Steel
Mounting brackets, end-of-bench	14 ga. (.075") CQCR Steel

Modular Power Block with GFCI Receptacle

Housing and back bracket	16 ga. (.059") CQCR Steel

Modular Connector Faceplates

Faceplate	16 ga. (.059") CQCR Steel

Non-Metals	Thickness and Material

Laminate Worksurfaces

Worksurface core	1.12" X 45 lb/cu ft medium density particle board
Top and bottom laminate (standard)	.012" thick laminate
Front edge banding	3mm thick rigid plastic
Side and back edge banding	1mm thick, flat profile rigid plastic

ChemsurfÂ® Chemical-Resistant Laminate Worksurfaces

Worksurface core	1.12" X 45 lb/cu ft medium density particle board
ChemsurfÂ® (option)	VGP grade, resin-impregnated kraft paper
Front edge banding	3mm thick rigid plastic
Side and back edge banding	1mm thick, flat profile rigid plastic

Phenolic Resin Worksurfaces

Worksurface core	.75" thick, phenolic resin-impregnated kraft paper

Phenolic Drying Rack

Panel	1.00" thick, phenolic resin-impregnated kraft paper
Pegs	.38" dia x 5" long polypropylene pegs

Phenolic Drip Trough

Trough	1.00" thick, phenolic resin-impregnated kraft paper
Drain tube	.50" OD rigid phenolic tube
Drain flexible tube	.50" OD x 3' long flexible clear PVC tubing

Laminate Overhead Storage Cabinets

Panel core (Top, Bottom, Ends, Back, Door, Shelf)	.75" X 45 lb/cu ft industrial grade particle board
Laminate	.012" thick laminate
Cabinet edge banding	1mm thick, flat profile rigid plastic
Door edge banding	2mm thick, flat profile rigid plastic
Glass door	.25" thick tempered safety glass

Steel Overhead Storage Cabinets

Glass door	.25" thick tempered safety glass

Laminate Storage and Sink Cabinets

Panel core (Top, Bottom, Base, Ends, Back, Door, and Shelf)	.75" X 45 lb/cu ft industrial grade particle board
Laminate	.012" thick laminate
Cabinet edge banding	1mm thick, flat profile rigid plastic
Drawer/Door edge banding	2mm thick, flat profile rigid plastic
Drawer/Door stop	Rubber

Steel Storage and Sink Cabinets

Drawer/Door stop	Rubber

Power Block

Housing	Ultramid Nylon

Harness-to-Harness Connector

Housing	Ultramid Nylon

Duplex Receptacles

Housing	Ultramid Nylon

Modular Harnesses and Multipurpose Power Infeeds

Connector housing	Ultramid Nylon

Wire Manager

Channel	Rigid plastic

C103011 CLOSETS

This paragraph includes all built-in closets with associated work and finishes.

C103012 FIRESTOPPING PENETRATIONS

This paragraph covers fire-stopping assemblies to include sleeves, caulking and flashing. See PTS Section D40, *Fire Protection*, for additional requirements.

C103012 1.1 FIRESTOPPING

Provide asbestos-free firestopping material capable of maintaining an effective barrier against flame, gases and temperature. Provide non-combustible firestopping that is non-toxic to human beings during installation or during fire conditions. Devices and equipment for firestopping service shall be UL FRD listed or FM P7825 approved for use with applicable construction, and penetrating items.

C103012 1.1.1 Fire Hazard Classification

Material shall have a flame-spread of 25 or less, a smoke developed rating of 50 or less when tested in accordance with UL 723 or UL listed and accepted.

C103012 1.1.2 Firestopping Rating

Firestopping materials shall be UL FRD listed or FM P7825 approved for "F" and "T" ratings at least equal to the fire-rating of the fire wall in which penetrated openings are to be protected.

C103013 SPRAYED FIRE-RESISTIVE MATERIALS

See PTS Section D40, *Fire Protection*, for additional requirements.

C103013 1.1 SPRAYED FIRE-RESISTIVE MATERIALS

C103013 1.1.1 Quality Assurance

A pre-installation conference shall be held with the manufacturer’s approved installer prior to the application of the sprayed fire-resistive materials. See Paragraph C10 1.2 for field testing requirements for the fire-resistive material. Products provided shall not contain asbestos per 40 CFR 763.

C103013 1.1.2 Warranty

Contractor shall provide manufacturer's standard materials and workmanship warranty stating that the manufacturer agrees to repair or replace materials that fail within 2 years, or as required by the project program, from date of Substantial Completion.

C103013 1.1.3 Material Composition

Provide sprayed fire-resistive material consisting of factory-mixed, dry formulation of gypsum or Portland cement binders and light-weight mineral or synthetic aggregates mixed with water at the Project site, or provide sprayed-fiber fire-resistive material consisting of factory-mixed, dry formulation of inorganic binders, mineral fibers, fillers, and additives conveyed in a dry state by pneumatic equipment and mixed with water at a spray nozzle to form a damp, as-applied product.

C103013 1.1.4 Physical Properties

a. Dry Density: 15 lb/cubic foot (240 kg/cubic meter) for referenced fire-resistance design to attain the ratings indicated, per ASTM E 605.
b. Thickness: Provide minimum average thickness required for fire-resistance design indicated according to the following criteria, but not less than 0.375 inch (9 mm), per ASTM E 605:

   1) Where the referenced fire-resistance design lists a thickness of 1 inch (25 mm) or greater, the minimum allowable individual thickness of sprayed fire-restive material is the design thickness minus 0.25 inch (6 mm).

   2) Where the referenced fire-resistance design lists a thickness of less than 1 inch (25 mm) but more than 0.375 inch (9 mm), the minimum allowable individual thickness of sprayed fire-resistive material is the greater of 0.375 inch (9 mm) or 75 percent of the design thickness.

   3) No reduction in design thickness is permitted for those fire-resistance designs whose fire-resistance ratings were established at densities of less than 15 lb/cubic foot (240 kg/cubic meter).
c. Bond Strength: 150 lb/sq. ft. (7.2 kPa) minimum per ASTM E 736.
d. Compressive Strength: 5.21 lb/sq. in. (35.9 kPa) as determined per ASTM E 761. Minimum thickness of sprayed fire-resistive material tested shall be 0.75 inch (19 mm) and minimum dry density shall be as specified, but not less than 15 lb/cubic foot (240 kg/cubic meter).

e. Corrosion Resistance: No evidence of corrosion per ASTM E 937.
f. Deflection: No cracking, spalling, or delaminating per ASTM E 759.
g. Effect of Impact on Bonding: No cracking, spalling, or delaminating per ASTM E 759.
h. Air Erosion: Maximum weight loss of 0.025 g/sq. foot (0.270 g/sq. meter) in 24 hours per ASTM E 859.
i. Fire-Test-Response Characteristics: Provide sprayed fire-resistive materials with the following surface-burning characteristics per ASTM E 84 by United Laboratories: flame-spread index of 10 or less and a smoke developed index of 0.
j. Fungal Resistance: No observed growth on specimens per ASTM G 21.

C103014 ENTRANCE FLOOR GRILLES AND MATS

Provide entrance mats at all entrances to the facility. Provide recessed entrance mats at building entrances with enclosed vestibule and or surface applied entranceway mats or entranceway floor tiles at all other entrances. Entranceway mats and entranceway floor tile require the use of a transition edge where he mat adjoins other floor materials. Mat system shall meet ASTM D-2047 coefficient of friction requirements for dry and wet surfaces. All portions of mat system shall comply with ASTM E 648, Class I for flammability and ASTM E 662 for smoke development of â‰¤ 450. Fasteners shall be non-corrosive screws and anchors for securing frames together to floors. Provide continuous vinyl bottom cushion to quiet clatter at recessed entrance mat systems. Hinges shall be flexible aluminum or thermoplastic hinge retained in aluminum tread port, and allow debris and moisture to flow through recessed mat. Provide ball and socket hinge for easy roll-up of recessed mat inserts for cleaning. Recessed entrance mat systems shall use either an aluminum or thermoplastic framework and shall have replaceable wearing surface inserts. Provide inserts as follows:

a. Carpet Inserts - Carpet insert fiber shall be colorfast, solution dyed, anti-static, anti-microbial, and waterproof. Fiber shall be 100% nylon or polypropylene. Each carpet fiber shall be bonded to rigid ply backing to prevent fraying and supplied in continuous splice-free lengths. Carpet shall be minimum of 30-oz./ydÂ².
b. Vinyl or Rubber Inserts - Vinyl or rubber inserts shall be removable and be made from recycled materials wherever possible. Inserts shall have serrated edges for scraping purposed or flexible abrasive grit tape, bonded to a rigid vinyl tread insert.

C103014 1.1 RECESSED MAT THERMOPLASTIC FRAME PROPERTIES

Thermoplastic frame shall be colorfast and UV-resistant. Tensile strength of frame shall comply with ASTM D 638. Tensile impact of frame shall comply with ASTM D 1822. Flexural strength of frame shall comply with ASTM D 790. Shore D hardness of frame shall comply with ASTM D 2240. Rockwell R hardness of frame shall comply with ASTM D 785. Coefficient of thermal expansion of frame shall comply with ASTM D 696.

C103014 1.2 RECESSED MAT ALUMINUM FRAME REQUIREMENTS

Aluminum frame and rail shall comply with ASTM B 221, alloy 6063-T5. Frame shall have butted corners and be factory coated with zinc chromate or manufacturer's standard protective finish where surfaces are in contact with concrete. Provide standard mill finish, color anodized finish complying with AAMA 606.1, clear anodized finish complying with AAMA 607.1, or bronze complying with ASTM B455, alloy 385.

C103014 1.3 SURFACE MOUNTED/LOOSE-LAY ENTRANCE MATS

Loose-lay mats shall have beveled vinyl or rubber transition edge and shall have surface of carpet or vinyl/rubber surfaces. Edges shall conform to ADA accessibility guideline 4.5.2, for loose-lay surface applications. Mats shall be easily removed yet remain adhered to floor to prevent mat from moving as pressure from walking is applied. Do not use carpet inserts unless directed otherwise.

C103014 1.4 SURFACE APPLIED ENTRANCEWAY FLOOR TILE

Applied entranceway floor tiles shall be in the form of carpet tiles, carpet tiles with vinyl or rubber scrubbing surfaces, or tiles of thermoplastic scrubbing surfaces only. Tiles shall be installed in areas where permanent mat is required but slab is not recessed to receive permanent recess mat. Tiles shall be securely installed without obvious seams, cleanable, dimensionally stable, and with maximum finished tile thickness of 1/2" above finished floor line. Carpet fibers shall 100% nylon or polypropylene, anti-static, anti-microbial, colorfast, solution dyed, mold and mildew resistant, and waterproof with minimum face weight of 30 oz/yd2. Thermoplastic only tiles shall be PVC free and UV-resistant.

C103015 ORNAMENTAL METALWORK

Building components made from ornamental metals. Ornamental stair handrails are included in B1010 EXTERIOR STAIRS and PTS C20, *Stairs*.

C103090 OTHER INTERIOR SPECIALTIES

This paragraph covers other interior specialties not described by other assembly categories listed previously.

C103090 1.1 PROJECTION SCREEN

Motorized projection screen shall be wall, ceiling, or above ceiling mounting, and shall have a 120V motor that is lubricated for life, quick reversal type, has overload protector, integral gears, and preset accessible limit switches. Screen shall be flame retardant, mildew resistant and have black masked borders. Controls shall be wall mounted with wiring concealed within the wall construction. Pull-down projection screens shall be provided in lieu of motorized projection screens as approved by the Activity, as specified in the project program.

C103090 1.2 OTHER INTERIOR SPECIALTIES

Also see PTS Section C30 for additional interior specialties not specified here.

-- End of Section --

SECTION C30

INTERIOR FINISHES
05/14

C30 GENERAL

RFP Part 3 including the Engineering System Requirements (ESR) provide project specific requirements. The RFP Part 4, Performance Technical Sections (PTS) provide generalized technical requirements that apply to multiple facility types and include more requirements than are applicable to any one project. Therefore, only the RFP Part 4 requirements that apply to the project and further define the RFP Part 3 project specific requirements are required.

All interior finish products shall be from manufacturers' standard running line offerings. Custom fabrications shall not be allowed unless otherwise noted.

C30 1.1 DESIGN GUIDANCE

Provide the design and installation in accordance with the following references. This Performance Technical Specification (PTS) adds clarification to the fundamental requirements contained in the following Government Standards. The general requirements of this PTS section are located in PTS Section Z10, *General Performance Technical Specification*.

Industry standards, codes, and Government standards referenced in the section text that are not found in the Unified Master Reference List (UMRL) in the Construction Criteria Base (CCB) at the Whole Building Design Guide Website , are listed below for basic designation identification. Comply with the required and advisory portions of the current edition of the referenced standard at the time of contract award.

C30 1.1.1 Industry Standards And Codes

FLOOR COVERING INSTALLATION CONTRACTOR'S ASSOCIATION (FCICA)

FLOOR COVERING INSTALLATION BOARD (FCIB)

TILE COUNCIL OF NORTH AMERICA (TCNA)

C30 1.1.2 Government Standards

UNIFIED FACILITIES CRITERIA (UFC)

UFC 1-200-01	General Building Requirements(A reference in this PTS section to UFC 1-200-01 requires compliance with the Tri-Service Core UFCs that are listed in UFGS Section 01 33 10.05 20, which includes the following significant UFC(s):UFC 3-

101-01, Architecture UFC 3-120-10, Interior Design)

C30 1.2 QUALITY ASSURANCE

C30 1.2.1 Paint Applicatorâ€™s Qualifications

C30 1.2.1.1 SSPC QP 1 Certification

For the application of industrial coatings identified in the Project Program, all contractors and subcontractors that perform surface preparation or coating application shall be certified by the Society for Protective Coatings (formerly Steel Structures Painting Council) (SSPC) to the requirements of SSPC QP 1 prior to contract award, and shall remain certified while accomplishing any surface preparation or coating application. The painting contractors and painting subcontractors must remain so certified for the duration of the project. If a contractor's or subcontractor's certification expires, the firm will not be allowed to perform any work until the certification is reissued. Requests for extension of time for any delay to the completion of the project due to an inactive certification will not be considered and liquidated damages will apply. Notify the Contracting Officer of any change in contractor certification status.

C30 1.2.2 Aircraft Maintenance Hangar and Vehicle Maintenance Flooring Installer Qualifications

The Designer of Record shall utilize UFGS Specification Section 09 67 23.14, *Fuel Resistive Resinous Flooring, 3-Coat*to provide the required installer qualifications for the floor coating system.

C30 1.3 PERFORMANCE VERIFICATION AND ACCEPTANCE TESTING

Verification of satisfactory interior finish assemblies' performance shall be via Performance Verification Testing, as detailed in this section of the RFP.

C30 1.3.1

Provide sample of textured ceiling application for DOR approval before resuming work. Sample shall be used as a reference for remaining application.

C30 1.3.2

Provide sample of multicolor paint application for DOR approval before resuming work. Sample shall be used as a reference for remaining application.

C30 1.3.3

Provide sample of terrazzo and/ or architectural cast-in-place concrete floor application for DOR approval before resuming work. Sample shall be used as a reference for remaining application.

C30 1.4 DESIGN SUBMITTALS

Design Submittals shall be in accordance with Z10, *General Performance Technical Specifications*, UFGS section 01 33 10.05 20, *Design Submittal Procedures*, FC 1-300-09N, *Navy and Marine Corps Design Procedures* and UFC 3-101-01, *Architecture*.

In addition, UFGS sections listed below or in the body of the PTS text are to be used by the Designer of Record (DOR) as a part of the design submittal. If the UFGS products or systems are applicable to the project, the DOR shall edit these referenced UFGS sections and submit them as a part of the design submittal specification. Edit the specification sections in accordance with the limitations stated in PTS section Z10, General Performance Technical Specifications.

Changes shall not be made to the finishes that are submitted in the plans, specifications, and Structural Interior Design submittals and approved by the Government during the design phase unless changes are requested by the Government. In the event that revisions may be required because of unforeseen conditions such as discontinued product, the revisions must be approved by the DOR and then submitted to the Government Interior Designer for approval before substitutions can be made.

C30 1.5 CONSTRUCTION SUBMITTALS

Submit construction submittals in accordance with PTS section Z10, *General Performance Technical Specifications*. In addition to the Z10 requirements, the Designer of Record (DOR) and the NAVFAC Interior Designer shall approve the following construction submittals as a minimum:

Paint, Finish materials, Finish colors

Installation drawings for floors with carpet, tile, stone, architectural cast-in-place concrete or terrazzo to include locations and details of seams, color and material transitions, details of divider strips, control joints, and crack control solutions.

Changes shall not be made to the finishes that are submitted and approved by the Government during the design phase. In the event that revisions may be required because of unforeseen conditions such as discontinued product, the revisions must be approved by the DOR and then submitted to the Government Interior Designer for approval before substitutions can be made.

C3010 WALL FINISHES

Interior wall finishes shall be moisture and mildew resistant, easily

maintained, and suitable in accordance with industry standards for the architectural surface being finished. For painted wall finishes, refer to C3040 "INTERIOR PAINTING AND SPECIAL COATINGS".

C301001 CONCRETE WALL FINISHES

C301001 1.1 SPECIAL OR ARCHITECTURAL FINISHES ON INTERIOR CONCRETE WALLS

Cast-in-place or pre-cast concrete wall finishes shall include, but are not limited to, abrasive blasted surfaces, colored surfaces, exposed aggregate, grooved surfaces, or tooled surfaces.

C301002 PLASTER WALL FINISHES

Veneer plaster shall be gypsum plaster veneer finish on gypsum base finishes, or cement plaster veneer finish on concrete or masonry. Refer to Section C3040 for paint system and gloss level.

C301002 1.1 GYPSUM PLASTER

Provide gypsum neat plaster or high strength gypsum plaster base coat conforming to ASTM C28. High strength gypsum plaster shall have a compressive strength of not less than 2,500 psi, when tested dry in accordance with ASTM C472.

C301002 1.1.1

High strength gypsum gaging plaster finish coat shall have a compressive strength of not less that 4,500 psi when tested dry in accordance with ASTM C472.

C301002 1.1.2

Provide gypsum molding plaster for ornamental plaster in accordance with ASTM C59.

C301002 1.1.3

Provide Keene's cement finish coat conforming to ASTM C61.

C301002 1.1.4

Provide acoustical gypsum plaster finish coat conforming to ASTM E1042 Type I or II Class A, noncombustible.

C301002 1.2 CEMENT PLASTER

C301002 1.2.1

Portland cement plaster base coat in accordance with ASTM C150, gray Portland cement. Use Type I when no special characteristics are required, Type II when plaster and stucco will be exposed to moderate sulfate (alkali) action, Type III when early strength is needed as in cold weather, and Type V when high resistance to sulfate is required.

C301002 1.2.2

Portland cement plaster finish coat in accordance with ASTM C150, gray Portland cement Type I when no special characteristics are required, Type II when plaster and stucco will be exposed to moderate sulfate (alkali) action, Type III when early strength is needed as in cold weather.

C301002 1.2.3

Factory-mixed finish coat according to the manufacturer's instructions.

C301003 GYPSUM WALLBOARD FINISHES

Conform to specifications, standards and requirements in accordance with Gypsum Association GA 214, GA 216 and GA 224. Provide asbestos free materials only. Provide Type X gypsum board in fire rated assemblies. Provide a foil back gypsum board when a vapor retarder is required.

C301003 1.1 REGULAR GYPSUM BOARD

ASTM C36/C36M and ASTM C1396/C1396M 1/2 or 5/8 inch (12.7 mm or 15.9 mm) thick in residential construction, and 5/8 inch (15.9 mm) thick in non-residential construction, tapered edges for exposed layers, square edges for concealed backer layers.

C301003 1.2 MOISTURE RESISTANT GYPSUM BOARD

ASTM C630/C630M, 1/2 or 5/8 inch (12.7 mm or 15.9 mm) thick in residential construction, and 5/8 inch (15.9 mm) thick in non-residential construction. Use in humid areas or spaces but not as a substrate in tiled areas where wall tile is exposed to direct moisture contact or condensation accumulation.

C301003 1.3 FOIL BACKED GYPSUM BOARD

ASTM C1396/C1396M 1/2 or 5/8 inch (12.7 mm or 15.9 mm) thick in residential construction, and 5/8 inch (15.9 mm) thick in non-residential construction, tapered edges for layers exposed to view, square edges for concealed layers. Seal joints in foil backing to other panels and adjoining materials as recommended by the panel manufacturer.

Alternative to foil backed gypsum board in Secured Areas: Field applied foil faced barrier material is an acceptable alternative for pre manufactured foil backed gypsum board. Provide a continuous composite multilayer barrier with a woven polyethylene sheet sandwiched between two sheets of solid reflective aluminum surfaces. Shielding effectiveness tested in accordance with IEEE 229/ ASTM D4935. Install barrier in accordance with manufactures instructions.

C301003 1.4 CEMENTITIOUS BACKING UNITS

ANSI A108.11 and ANSI A118.9, 5/8 inch (15.9 mm) thick; use as a

substrate for ceramic tile in wet areas that are exposed to direct moisture contact or condensation accumulation for areas including, but not limited to, tubs, shower enclosures, saunas, steam rooms, gang shower rooms, and shower drying rooms. Provide screws specifically designed for use with cement panels.

C301003 1.5 IMPACT RESISTANT GYPSUM BOARD

Reinforced gypsum panel with imbedded fiber mesh or polycarbonate resin thermoplastic backing, 5/8 inch (15.9 mm) thick, tapered edges, in accordance with Structural Failure Test; ASTM E695 or ASTM D2394 and Indentation Test; ASTM D5420 or ASTM D1037. Provide metal framing of 20-gauge minimum. Provide fasteners that meet manufacturer requirements and specifications. Impact resistant gypsum board shall have a flame spread rating of 25 or less and a smoke developed rating of 50 or less, ASTM E84. Finish with a high strength plaster veneer. Refer to PTS C10 for further requirements on impact resistant wall construction.

C301003 1.6 JOINT TREATMENT

ASTM C475, Joint compound shall be specifically formulated and manufactured for use with and compatible with tape, substrate and fasteners as recommended by the manufacturer. Tape and finish gypsum board in accordance with ASTM C840, GA 214 and GA 216. Provide premanufactured joints at all structural expansion joints, crack control joints, and change of materials as recommended by the manufacturer and in accordance with GA 216.

C301003 1.7 FASTENERS

ASTM C514. Fasteners shall be compatible with each type of gypsum board material as recommended by the gypsum board manufacturer and in accordance with GA 216 and GA 224.

C301003 1.8 ACCESSORIES

ASTM C1047. Fabricate from corrosion protected steel or plastic designed for intended use. Accessories manufactured with paper flanges are not acceptable. Flanges shall be free of dirt, grease, and other materials that may adversely affect bond of joint treatment. Provide prefinished or job decorated materials. For predecorated gypsum board provide prefinished metal or plastic trim to match predecorated gypsum board. Install as recommended by GA 214, GA 216 and GA 224.

C301003 1.9 LEVEL OF FINISH

C301003 1.9.1

Tape and finish gypsum board in accordance with ASTM C840, GA 214 and GA 216. Plenum areas above ceilings shall be finished to GA 214, Level 1. Water resistant gypsum backing board, ASTM C630/C630M, to receive ceramic tile shall be finished to GA 214, Level 2. Walls to receive a heavy-grade wall covering or have textured finish before painting shall be finished to GA 214 Level 3. Walls without wall wash lighting to receive paint (MPI Gloss Level 2), light textures, or wall coverings shall be finished to

GA 214 Level 4. Unless otherwise specified, all gypsum board walls, partitions shall be finished to GA 214 Level 5. Provide joint, fastener depression, and corner treatment. Do not use fiberglass mesh tape with conventional drying type joint compounds; use setting or hardening type compounds only. Provide treatment for water-resistant gypsum board as recommended by the gypsum board manufacturer.

C301003 1.9.2

Wherever gypsum board is to receive eggshell (MPI Gloss Level 3), semigloss (MPI Gloss Level 5), or gloss (MPI Gloss Level 6) paint finish, finish gypsum wall surface to GA 214 Level 5.

C301003 1.9.3

Where wall wash lighting will accent the flatness of the wall and surface irregularities in gypsum board joints, provide feature edge gypsum board and two coat joint compound fillers. Provide this special joint treatment at up lighting, down lighting and horizontal lighting at the end of a passageway wall.

C301004 TILE AND TERRAZZO WALL FINISHES

C301004 1.1 CERAMIC TILE WALL SYSTEM FINISHES

Provide ceramic tile wall systems as defined in the Tile Council of America (TCA) handbook for ceramic tile installations suitable for the service requirements listed. Install systems in accordance with ANSI A108/A118 series standards. Colored epoxy grout with sealer shall be provided. Coordinate with ceramic bath accessories for modularity. Include all trim pieces, caps, stops, and returns to complete installation.

C301004 1.1.1

Ceramic Mosaic Wall Tile shall be a minimum of 1/4 inch (6 mm) thick and installed from floor to ceiling, unless otherwise noted.

C301004 1.1.2

Wall tile shall be glazed, matte glazed or unglazed finish. Refer to project program for tile type, pattern, and surface texture.

C301004 1.1.3

Porcelain wall tile shall be through color, polished or unpolished. Refer to project program for tile type, pattern, and surface texture.

C301004 1.1.4

Provide wall tile color and style selections a minimum of one grade above base grade.

C301004 1.1.5

Provide Designer accent tile, accent strips and accessory ceramic tile shapes as an integral part of the ceramic wall tile system.

C301005 WALL COVERINGS

Wall coverings shall be material designed specifically for the specified use. The wallcovering shall contain a non-mercury based anti-microbial. The wallcovering shall be the type made without the use of cadmium-based stabilizers. Wallcovering shall have a Class A flame spread rating of 0-25 and smoke development rating of 0-50 when tested in accordance with ASTM E84. The wall preparation, trimming, adhesive and application shall be according to the manufacturer’s printed directions. The manufacturer shall approve the installers in writing. The material must be easily cleaned by traditional methods such as washing, wiping, or vacuuming. Primer and adhesive shall be of a type recommended by the wallcovering manufacturer and shall contain a non-mercury based anti-microbial. Adhesive shall be strippable type. Do not apply wall coverings to the interior surface of exterior walls.

C301005 1.1 VINYL WALL COVERING

C301005 1.1.1

Vinyl wallcovering shall be a vinyl coated woven or nonwoven fabric with germicidal additives and shall conform to ASTM F793, Category V Type II, 13.1 to 22 ounces (371 g to 624 g) total weight per square yard and width of 54 inches (1370 mm). Provide ASTM F793, Category VI, Type III, 22 ounces (624 g) and above to cover rough textured walls such as masonry.

C301005 1.1.2

Provide a polyvinyl fluoride film, 0.0005 inch (0.012 mm) thick or thicker shall be factory applied to the wall covering where additional resistance to staining and soiling from exposure to staining reagents or chemicals and resistance from abuse is required. The film shall be transparent (clear), medium gloss.

C301005 1.2 FABRIC WALL COVERING

C301005 1.2.1

Fabric wallcovering shall be woven material of Polyester or Polyolefin, or a combination of the two fibers with an acrylic backing. The face shall be treated with a soil repellent finish. The material must be a minimum of 48 inches (1219 mm) wide. "Tackable" wall covering shall be "self-healing" from tack penetration through the covering into the substrate. The material must be a minimum of 12 ounces (340 g) per square yard exclusive of backing. A tackable wall covering will not be required for smoother, less textured surface appearance.

C301005 1.2.2

Acoustical wallcovering shall be textured, woven or non-woven

material of polyester or polyolefin, or a combination of the two fibers with an acrylic backing. The material must be a minimum of 48 inches (1219 mm) wide and a minimum of 16 ounces (454 g) per square yard. The material shall have an NRC rating of .15 on gypsum board in accordance with ASTM C423.

C301005 1.3 WALLCOVERING BORDER

Vinyl wallcovering border shall be a vinyl coated woven or nonwoven fabric with germicidal additives and shall conform to ASTM F793, Type I, 7 to 13 ounces (198 g to 368 g) or Type II, 13.1 to 22 ounces (371 g to 624 g) total weight per square yard.

C301005 1.4 SURFACE PREPARATION FOR UNEVEN WALLS

C301005 1.4.1

Wall liner shall be a non-woven polyester cellulose blend having a minimum weight of 3.7 ounces (105 g) per square yard and a total minimum thickness of 0.013 inches (0.33 mm). Wall liner shall have a Class A flame spread rating of 0-25 and smoke development rating of 0-50 when tested in accordance with ASTM E84. Use for masonry walls or walls with uneven surfaces.

C301005 1.4.2

For masonry or rough textured walls, use a veneer plaster finish to smooth the walls prior to wallcovering installation.

C301005 1.5 CORNER GUARDS

C301005 1.5.1

Corner guards shall be 3/32 inch (2.4 mm) thick and shall cover 1 inch (25 mm) each side of corner at right angles. Corner guards shall be clear polycarbonate. Use in executive areas, office areas, and wall-covered areas subject to cart traffic as a minimum.

C301005 1.5.2

Corner guards shall be 3/32 inch thick and shall cover 2-1/2 inches (64 mm) each side of corner at right angles. Corner guards shall be through color polycarbonate or rubber. Use in corridors or other high traffic areas.

If protective wall components from paragraphs C301090 – 1.5 and 1.6 are provided, corner guards shall be from the same lot and color as protective wall components.

C301005 1.6 WAINSCOT CAP

C301005 1.6.1

Wainscot cap shall be satin-finished extruded aluminum approximately 3/4 inch (19 mm) high, feathered at bottom edge,

with an approximate 3/16 inch (5 mm) exposed face on top edge, and grooved to receive the covering. Adhesive to install wainscot cap shall be of a type recommended by the manufacturer of the cap.

C301005 1.6.2

Wood wainscot cap shall be 3-1/2 by 3/4 inch (89 mm by 19 mm) solid hardwood, AWI Custom grade, with painted or stained finish. Profile shall be a molded shape.

C301006 ACOUSTICAL PANELS ADHERED TO WALLS

Acoustical wall treatment shall be acoustical panels, sound absorbing wall units, or acoustical wall systems. Acoustical panel system shall include manufacturer's standard concealed fasteners, splines, tracks, and other components necessary to complete the installation. Fire rating for the complete composite system shall be Class A, 200 or less smoke density and flame spread less than 25, when tested in accordance with ASTM E84.

C301006 1.1 ACOUSTICAL FABRIC COVERED WALL PANELS

C301006 1.1.1

Prefinished factory assembled wall panels shall consist of, seamless fabric covered fiberglass or mineral fiber core system. Perimeter edges shall be reinforced by an aluminum frame or a formulated resin edge hardener. Fabric covering shall be stretched free of wrinkles and then bonded to the edges and back or bonded directly to the panel face, edges, and back of panel a minimum distance standard with the manufacturer. Mounting shall be by manufacturer's standard concealed spline, mechanical fasteners, magnetic fasteners, hook and loop or adhesive mounting.

C301006 1.1.2

Stretched fabric wall panel system shall consist of continuous perimeter and butt seam mounting extrusions, site-fabricated and applied directly to the substrate. Facing fabric shall be stretched over core materials and attached without adhesives, nails, tacks, screws or tapes so that fabric may be removed and replaced with framework in place.

C301006 1.1.3

Fabric shall be seamless, 100% polyester or olefin or a blend of the two. Light fastness (fadeometer) shall be approximately 40 hours in accordance with AATCC 16.

C301006 1.1.3.1

Non-woven, embossed texture, or needle punched 100 percent polyester, minimum 12 ounces (340 g) per linear yard. Tear strength shall be minimum 25 pounds (11.25 kg) machine direction and minimum 40 pounds (18 kg) cross-machine

direction in accordance with ASTM D1117. Tensile strength shall be minimum 50 pounds (22.5 kg) machine direction and minimum 75 pounds (34 kg) cross-machine direction in accordance with ASTM D5034.

C301006 1.1.3.2

Woven, minimum 2-ply 100 percent polyester or olefin, minimum 12 ounces (340 g) per linear yard. Tear strength shall be minimum 29 pounds (13 kg). Tensile strength shall be 150 pounds (68 kg) minimum in accordance with ASTM D5034.

C301006 1.1.3.3

Perforated vinyl covering with fabric backing, minimum 20 ounces (567 g) per linear yard total weight.

C301006 1.2 ACOUSTICAL WALL PANELS

Aspen wood fibers bonded together with an inorganic hydraulic cement binder, formed in a continuous process under heat and pressure. Nominal overall panel thickness shall be 1 inch (25 mm). Noise Reduction Coefficient shall be not less than NRC 0.85 for Type C-40 and C-80 mounting.

C301090 OTHER WALL FINISHES

C301090 1.1 SOLID SURFACING WALL FINISHES

Solid surfacing material shall consist of 100% pure acrylic polymer, mineral fillers, and pigments. The material shall be homogenous, not coated or laminated, meeting ANSI Z124.3 and ANSI Z124.6 requirements. Superficial damage to a depth of 0.010 inch (.254 mm) shall be repairable by sanding or polishing. Provide manufacturer's full range of colors and patterns. Flammability, ASTM E84: Class I/A, flame spread 25 maximum; smoke developed 30 maximum.

C301090 1.1.1

If used in a shower, solid surfacing wall finishes shall extend from top of shower pan to a minimum of 84 inches (2130 mm) or to underside of ceiling and shall surround the shower enclosure. Wall finish shall extend from top of tub to 84 inches (2130 mm) and shall surround tub shower. If used in a kitchen, solid surfacing wall finish shall extend from top of kitchen countertop to underside of wall cabinet.

C301090 1.1.2

Provide solid surfacing with factory recommended fasteners/adhesives/caulk to complete the installation.

C301090 1.2 PLASTIC LAMINATE WALL FINISHES

Plastic laminate used for wall applications shall be commercial grade,

high-pressure laminate with a #60 finish, approved for vertical applications. NEMA LD 3.

C301090 1.2.1

The kitchen wall area between the counter top backsplash and the bottom of the wall cabinet shall be plastic laminate. Laminate wall finish shall include factory recommended fasteners/adhesives/caulk to complete the installation.

C301090 1.3 DECORATIVE PANELING SYSTEM

Architectural paneling system applied to interior walls shall include associated furring, fastening, and trim to complete the installation. Wood paneling system finish shall be factory or field applied.

C301090 1.4 WOOD TRIM AND DETAILING FINISHES

Decorative panels, chair rail, standing and running trim, shall be of AWI custom grade hardwood with a painted or stained finish. Refer to C3040 "INTERIOR PAINTING AND SPECIAL FINISHES" for finish system. Chair rail shall be a minimum of 3-1/2 inches (89 mm) high. Profile of chair rail shall be a molded shape. Wood trim shall include associated furring, fastening, adhesives and trim to complete the installation.

C301090 1.5 IMPACT RESISTANT PANEL OR WAINSCOT WALL FINISHES

The wall covering panel system, or wainscot, shall be an impact-resistant acrylic PVC sheet of a minimum 0.060 inch (1.5 mm) thickness in 4 foot by 8 foot (1219 mm by 2438 mm) sheets. The system shall be Class A (ASTM E84), UL listed, and chemical and stain resistant. It shall include all accessories, such as top caps, joint covers, and inside and outside corners, necessary for a complete installation. A full range of colors and textures shall be included. The wall panel system shall have coordinating color and pattern options for all components within the system. The wall panel system shall offer a 21 ounce (595 g) fabric backed vinyl wallcovering laminated to a 0.020 inch (.51 mm) rigid acrylic/PVC backing capped with 1 mil of protective film.

C301090 1.5.1

Impact Resistant Trim Finishes - Impact resistant chair or handrail system shall be a formed rigid PVC product. Chair or handrail shall be a minimum of 3 inches (76 mm) high and be mounted with concealed hardware. Chair or handrail system shall be chemical, stain, and bacteria resistant. Chair rail shall be UL classified, conforming to NFPA Class A fire rating and ASTM D256-90b for impact strength of 30.2 ft-lbs/inch thick.

C301090 1.6 CORNER AND WALL GUARDS

Corner and wall guards shall be high-impact formed polyvinyl chloride a minimum of 0.078 inch (2 mm) with concealed mounting hardware and end closure. If used with an impact resistant panels system, the guards shall be from the same manufacturer as the impact resistant wall panel

system, chair or hand rail system and shall include all accessories necessary for a complete installation. A full range of styles, colors and textures shall be included.

C3020 FLOOR FINISHES

Refer to C3040 "INTERIOR PAINTING AND SPECIAL FINISHES" for painted floor coatings.

C3020 1.1 RESILIENT SUBFLOOR PREPARATION

Have third party independent concrete slab testing agent verify that concrete slabs comply with ASTM F710. Minimum values shall not be below the following: Concrete floor flatness shall meet minimum flatness of FF 60 when tested in accordance to ASTM E1155 - 96(2008). Concrete levelness on slab on grade shall meet minimum levelness of FL 45 when tested in accordance with ASTM E1155 - 96(2008). This requirement does not apply to elevated concrete slabs.

C3020 1.1.1 Floor Preparation

Prior to installation of flooring materials the concrete sub-floors are to be dry, free of curing compounds, sweeping compounds, sealers, hardeners, and other materials which could interfere with bonding of adhesive. If curing compounds, sweeping compounds, bond breakers or sealers exist, they shall be completely removed by mechanical means and methods, specifically grinding and shot blasting of concrete surface as necessary. Determine adhesion and dryness characteristics by performing bond and moisture tests. Prior to building being conditioned, perform a preliminary moisture test using in situ probe relative humidity testing as specified per ASTM F 2170.

C3020 1.1.2 Testing

All pre-installation moisture testing is to be performed by a qualified independent testing agency. Perform the following test as soon as building is enclosed, watertight, and conditioned, and a minimum of two months prior to floor covering installation.

a. Moisture Testing: Perform moisture and pH tests as recommended by the flooring and adhesive manufacturers. Perform test starting on the deepest part of the concrete structure. Proceed with installation only after concrete substrates meet or exceed floor covering manufacturer's requirements. In the absence of specific guidance from the flooring manufacturer the following shall be the required minimum:

b. Perform concrete internal relative humidity testing using in situ probes in accordance with ASTM F 2170. Proceed with installation only after concrete reaches maximum 75 percent relative humidity level measurement.

C3020 1.1.3 Additional Preparation

If tested moisture levels exceed the allowable limits, shot blast

the concrete subfloors to including grinding of areas not accessible to shot blasting equipment and install a 100% solids VOC free epoxy moisture and pH control system as recommended by the third party testing agent.

a. Install cement based self-leveling underlayment over epoxy moisture and pH control system to create a smooth substrate suitable for floor covering and approved by floor covering manufacturer for use with their products.

b. Correct conditions that will impair proper installation.

c. Fill cracks, joints and other irregularities in concrete with leveling compound.

d. Do not use adhesive for filling or leveling purposes.

C3020 1.1.4 Final Cleaning Prior to Flooring Finish Installation

Clean floor of oil, paint, dust, and deleterious substances. Leave floor dry and cured free of residue from existing curing or cleaning agents.

C302001 TILE FLOOR FINISHES

Provide ceramic tile floor systems as defined in the Tile Council of North America (TCNA) handbook for ceramic tile installation and materials for the service requirements listed. Provide installation and materials in accordance with ANSI A108/A118 series standards, except do not use organic adhesives. Provide manufacturer’s full range of colors and styles. Tile shall be a minimum of two grades above base grade.

Mortar shall be Portland cement, ANSI A108.1A/1B/1C/ A118.1, Latex-Portland cement, ANSI A108.5/A118.4 or Epoxy ANSI A108.6/A118.3.

Grout shall be factory sanded Portland cement, ANSI A108.10/A118.6, Latex-Portland cement, ANSI A108.10/A118.7 or Epoxy ANSI A108.6/A118.3. Provide tile joint grout sealer on white, light colored areas that are routinely exposed to water and liquid cleaning materials, entrance areas, and areas that require a high degree of stain resistance, and as required by the manufacturer. Provide chemical resistant epoxy resin for kitchens and other areas where high resistance to staining and absorption are required, ANSI A118.3.

Slip resistant tile shall have a minimum Dynamic Coefficient of Friction (wet and dry) of 0.42, ANSI A137.1-2012. Tile shall have smooth, non-slip or textured surface and a glazed or unglazed finish. Non-slip or textured surface required for tile in areas where there is excessive water or grease and oils such as kitchens, dining facilities, shower rooms, toilets, and in industrial and maintenance facilities.

C302001 1.1 CERAMIC MOSAIC UNGLAZED FLOOR TILES

Ceramic Mosaic unglazed floor tiles shall be a minimum of 1/4 inch (6 mm) thick with a maximum of 1/16 inch (1.6 mm) grout width with cushioned edge. Tile shall have less than a 0.5 percent water

absorption rate, ASTM C373.

C302001 1.2 PORCELAIN FLOOR TILE

Porcelain floor tiles shall be a minimum of 5/16 inch (8 mm) thick with a maximum of 1/4 inch (6 mm) grout width with cushioned edge. Tile shall have a minimum breaking strength of 300 pounds (202 kg), ASTM C648 and a maximum absorption rate of 0.5%, ASTM C373. Tile shall be color through, impervious, unglazed or glazed finish with an unpolished, semi-polished, polished, or textured surface.

C302001 1.3 QUARRY FLOOR TILE

Quarry floor tiles shall be a minimum of 1/2 inch (12.7 mm) thick tiles with a maximum of 1/4 inch (6 mm) grout width. Tile shall have a minimum breaking strength of 350 pounds (158 kg), ASTM C648 and a maximum absorption rate of 3%, ASTM C373. Use grout release for darker pigmented grout colors. Tile shall have a maximum of 3.0 percent water absorption rate when tested in accordance with ASTM C373. Non-slip, abrasive grain or textured surface required for tile in areas where there is excessive water or grease and oils. Tile shall consist of semi-vitreous, vitreous or clay material with smooth or textured surface and unglazed finish.

C302002 TERRAZZO FLOOR FINISHES

Refer to Project Program for special design requirements.

C302002 1.1 BONDED TERRAZZO

Provide terrazzo, bonded to concrete, consisting of a terrazzo topping over an underbed. Where structural movement is anticipated which may injure the terrazzo, use the sand cushion (floating) method. Provide cementitious terrazzo in accordance with the NTMA bonded terrazzo specification. Patterns shall have three (3) colors with (18 gauge) minimum zinc "L" divider strips.

Applicator shall be approved by the NTMA and shall have a minimum of 5 years experience in the application of the materials to be used and shall have a completed 8 successful installations within the past 2 years.

C302002 1.2 RESINOUS TERRAZZO

The resinous terrazzo flooring shall be an epoxy terrazzo. All terrazzo, auxiliary products and materials and application techniques used must be approved by National Terrazzo and Mosaic Association (NTMA) and epoxy terrazzo manufacturer, whichever is more stringent, prior to use. These requirements shall include, but are not limited to the following;

Epoxy Terrazzo Minimum Requirements:

The contractor must be a member of NTMA and shall have a minimum 10 years application experience and have completed a minimum 5 successful installations over the past five years of similar scope, complexity and

minimum of 75 percent of the square footage.

No products shall contain VOC's or formaldehydes. Thickness 3/8" cast in place. Hardness: 60-85 per ASTM D-2240. Tensile Strength: 3,000 psi (min) per ASTM D-638. Compressive Strength: 10,000 psi (min) per ASTM D-695. Chemical Resistance: No deleterious effects per ASTM D-1308

Divider strips/control joints in the terrazzo shall be aluminum or brass shall occur directly above control joints in the subfloor and be a minimum 18 gauge "L" shape. A flexible crack suppression membrane (elastomeric) installed over entire floor slab surfaces, including all cracks in the subfloor. Flatness tolerance of the slab must be less than 0.25-in flatness variation over 10ft span. Fill areas with 100% epoxy solids with fine aggregates per manufacturer's recommendations for areas which do not meet the flatness tolerance mentioned above. The concrete surface shall use shot blasting only (no alternate method to be used). The concrete slab is to be tested for moisture transmission using ASTM F2170 Probe Test. Concrete slabs shall be shot-blasted and cleaned to receive epoxy terrazzo moisture vapor primer system as specified by manufacturer and NTMA, whichever is more stringent.

Maintain the ambient room and floor temperature at 60Â°F or above for a period extending 72 hours before, during and after floor installation. Concrete to receive epoxy terrazzo shall have cured for at least 28 days and be free of all curing compounds. Test concrete substrate to determine acceptable moisture levels prior to installation. Testing should be conducted according to ASTM F2170, Probe Test (determining relative humidity in concrete slabs using in situ probes). Concrete slabs shall be shot-blasted and cleaned to receive epoxy terrazzo moisture vapor primer system as specified by manufacturer and NTMA, whichever is more stringent. The building shall be enclosed and the HVAC system operational prior to and during each day of installation, the terrazzo contractor shall verify that the dew point is at least 5Â° F (-15Â° C) less than the slab and air temperature.

Physical properties of the moisture migrating primer shall have a maximum of 0.3 perms with 100% RH. Primer shall be a material recommended by the resin manufacturer which will penetrate the pores of the substrate and bond with the topping to form a permanent monolithic bond between the substrate and the topping.

Five colors for various patterns and accents throughout the flooring area. Marble chips shall not exceed #1 size. Provide a minimum of three 6" x 6" samples for each color and type of terrazzo for review prior to purchase and two 6" lengths of each type of divider strip. Use of post-industrial recycled marble or granite terrazzo chips. When completed, the terrazzo shall show a minimum of 70% decorative aggregate chips on the surface.

The finished floor will be rinsed clean, allowed to dry and non-yellowing, slip-resistant & durable water based acrylic sealer. Confirm with user if high polish finish may be used in lieu of sealer. Coordinate with user sheen of polished finish. Use 100% epoxy solids flexible resin, tinted to match adjoining terrazzo matrix per manufacturer's specification.

For concrete slab requirements; See PTS A10-50 Slab on Grade, 1.1.1 Slab on Grade where Resinous Terrazzo Floor Finish is scheduled.

C302003 WOOD FLOORING

C302003 1.1 WOOD FLOORING SYSTEM

Wood strip flooring shall be 3/4 inch (19 mm) thick by 2-1/4 inches (57 mm) face width, kiln dried, continuous tongue and groove and of standard lengths. Beech and birch shall be second grade in accordance with NOFMA Grading Rules. Hard maple shall be second and better in accordance with MFMA-01. Red and white oak shall be select grade in accordance with NOFMA Grading Rules. Strip flooring shall be marked with the trademark of the grading agency. The strip flooring shall be NOFMA certified and installed in accordance with NOFMA publication *Installing Hardwood Flooring*. Nails shall be as recommended by strip flooring manufacturer’s recommendations. Resilient pads shall be pneumatic rubber, PVC, or polyurethane resilient mounts to fit the floor system. Moisture barrier shall be 6 mil minimum thickness polyethylene.

C302003 1.1.1

Rooms where wood flooring is to be installed shall have permanent heating and air conditioning installed and working or adequate arrangements for ventilation and temperature controls starting not less than 3 days prior to beginning the installation of flooring and continuing throughout the remainder of the contract period.

C302003 1.1.2

Concrete slab shall be level, steel troweled to a tolerance of 1/8 inch (3 mm) plus or minus in a 10 foot (3048mm) radius. Slab surface shall be clean, dry, and approved by wood floor manufacturer prior to start of installation.

C302003 1.1.3

Unless otherwise approved, flooring shall be laid parallel to the length of the area to be floored. Strips shall be laid with close joints, snugly driven up but providing for expansion in accordance with humidity conditions expected during the life of the flooring. End joints shall be so alternated that there will be at least two boards between end joints in the same plane and at least 6 inches between end joints in adjacent boards. Space for expansion shall be left along perimeter walls and around fixed projections through the floor surface.

C302003 1.1.4

Flooring shall be sanded to a smooth, even, uniform finish without burns in accordance with the flooring manufacturer’s recommendations. The flooring shall be left clean and ready to receive the finishing materials. Refer to C3040 "INTERIOR PAINTING AND SPECIAL FINISHES" for floor finishes.

C302004 RESILIENT FLOOR FINISHES

All resilient flooring shall meet or exceed applicable ADA horizontal requirements. Each type of flooring shall be installed with recommended adhesive in accordance with the manufacturers' written instructions. Installers shall be approved by the manufacturer in writing and shall have a minimum of 3 yrs experience for each type of flooring to be installed. A minimum of 2% total quantity for each type flooring, color and pattern shall be provided and stored within each building for future replacement and patching. Provide manufacturers full line of color and pattern selections, including multi-color patterns. Use the resilient floor finishes as identified in the Project Program or as directed below.

C302004 1.1 RESILIENT SHEET FLOORING SYSTEMS

C302004 1.1.1

Resilient linoleum sheet flooring shall be made with natural raw materials including linseed oil, flour, and rosin or resin binders double calendared onto natural jute backing, ASTM F2034, Type I. Pattern and color shall extend throughout thickness of material. Gage shall be 0.10 inch (2.5 mm). Static load limit shall be 250 psi per ASTM F970. Seal linoleum using manufacturer's recommended sealer for commercial application. The manufacturer's technical representative shall review and approve each typical sample application on-site prior to resuming the installation and shall spot check each 1,196 square yards (1000 square meters) for quality control. Work shall not commence on any portion of work until the manufacturer's technical representative renders approval on site. A manufacturer's five year warranty is required.

C302004 1.1.2

Resilient rubber sheet flooring shall be commercial quality, dimensionally stable, wear resistant, firm and slip resistant with integral color. The rubber sheet flooring shall be a three-layer construction consisting of a rubber wear layer, a cushioned layer, and a polyester backing. All components of the construction shall be thoroughly vulcanized to prevent delamination. The rubber sheet flooring shall conform to ASTM F1860-98 and require no wax maintenance.

C302004 1.1.3

Resilient homogeneous vinyl sheet flooring shall be commercial quality, 0.080 inch (2.0 mm) overall nominal gauge with a minimum wear layer thickness of 0.066 inch (1.6 mm) and a minimum of 6 feet (1.83 m) wide. It shall be non-layered, non-backed and include a protective urethane finish for ease of maintenance and conform to ASTM F1303, Type II Grade 1 Class A. Seams shall be recess scribed and heat welded with patterned or solid color weld rods depending on the contractor’s design intent to camouflage, blend or accent the seam lines. Resilient homogeneous vinyl sheet flooring shall require no wax maintenance.

C302004 1.1.4

Resilient heterogeneous vinyl sheet flooring shall be commercial quality, 0.080 inch (2.0 mm) overall nominal gauge with a minimum wear layer thickness of 0.066 inch (1.6 mm) and a minimum of 6 feet (1.83 m) or 12 feet (3.6 m) wide. It shall include a protective urethane finish for ease of maintenance and conform to ASTM F1303, Type I Grade 1 Class A. Seams shall be recess scribed and heat welded with patterned or solid color weld rods depending on the contractor's design intent to camouflage, blend or accent the seam lines. Resilient heterogeneous vinyl sheet flooring shall require no wax maintenance.

C302004 1.2 RESILIENT TILE FLOORING SYSTEM

C302004 1.2.1

Resilient vinyl composition tile (VCT) shall be commercial grade, asbestos free, with a nominal overall gauge of 1/8 inch (3 mm) and a wear layer thickness of 1/8 inch (3 mm) nominal. The tile shall be manufactured in accordance with ASTM F 1066, Type II, Comp. 1, Class 2, through pattern. Tile shall be finished in accordance with manufacturer’s written instructions.

C302004 1.2.2

Resilient static dissipative vinyl composition tile (SDT) shall be of commercial grade, asbestos free, with a nominal overall gauge of 1/8-inch (3 mm) and a wear layer thickness of 1/8-inch (3 mm) nominal; with an antistatic additive. The SDT tile shall conform to ASTM F1066, Class 2 through pattern. The flooring shall be installed with recommended adhesive and accessories; and finished in accordance with the manufacturer's written instructions. Use SDT floors in computer areas or areas with sensitive electronic where the Project Program requires tile.

C302004 1.2.3

Resilient solid vinyl tile/plank shall be 0.1 inch (2.5 mm) thick, with a vinyl wear layer of 0.040 inches (1.mm) and shall be planks or square tiles. It shall include a protective urethane finish for ease of maintenance and conform to ASTM E648, Type III, Class 1 and ASTM F1700, Class III. Provide vinyl flooring that is easily cleaned with off-the-shelf products. Surface finishes requiring manufacturer supplied or special order cleaning solutions are not acceptable. Vinyl flooring shall have a marble, granite, stone, terrazzo or wood grain pattern. A manufacturer's 25-year min warranty is required. Products must meet the Buy American Act and be manufactured in ISO 9001 and ISO 14001 compliant factories.

C302004 1.2.4

Resilient rubber tile shall be 100% synthetic rubber with color through, slip resistance formulation, with a minimum base thickness of 0.125 inch (3.2 mm) and a minimum stud height of

0.024 inch (0.6 mm). Rubber tile shall conform to ASTM F1344, Class I and ASTM E648, Class 1. The product shall require no wax maintenance. A manufacturer's 10-year warranty is required for a raised round or square surface profile. A manufacturer's 5-year warranty is required for other surface textures with slip resistant formulation.

C302004 1.2.5

Resilient athletic rubber tile shall be 100% synthetic heavy rubber or recycled crumb rubber tile, 3/8 inch (9 mm) thick. Rubber tile shall conform to ASTM F1344 for recycled crumb rubber tile. The product shall require no wax maintenance. A manufacturer’s 2-year warranty is required. Use rubber tile flooring in weight and exercise rooms.

C302004 1.2.6

Resilient linoleum tile shall be made with natural raw materials including linseed oil, flour, and rosin or resin binders double calendared onto synthetic jute backing, ASTM F2034, Type I. Pattern and color shall extend throughout thickness of material. Gage shall be 0.10 inch (2.5 mm). Static load limit shall be 250 psi per ASTM F970. Seal linoleum using manufacturer's recommended sealer for commercial application. The manufacturer's technical representative shall review and approve each typical sample application on-site prior to resuming the installation and shall spot check each 1,196 square yards (1000 square meters) for quality control. Work shall not commence on any portion of work until the manufacturer's technical representative renders approval on site. A manufacturer's 5-year warranty is required.

C302005 CARPETING

C302005 1.1 GENERAL

Installer(s) shall be approved by the manufacturer in writing. Carpet manufacturer shall be established and in good standing with the industry. A minimum of 5% total quantity for each color and pattern shall be provided and stored within the building for future replacement patching.

C302005 1.2 CARPET PILE FIBER

Provide one of the following:

a. 100% premium branded, yarn-dyed, Type 6.6 continuous hollow filament nylon
b. 100% premium branded, solution-dyed, Type 6 or Type 6.6 continuous hollow filament nylon
c. 100% premium branded, combination yarn dyed and solution-dyed, Type 6 or Type 6.6 continuous hollow filament nylon

C302005 1.3 CARPET BACKING REQUIREMENTS

a. Provide manufacturer's standard high performance carpet backing.
b. Moisture resistant carpet backing shall pass the 24 hour British Spill Test.
c. Moisture proof carpet backing shall pass the 10,000 Impacts Test.
d. Provide moisture resistant carpet backing with an attached urethane cushion, minimum 18 lb. density.
e. Provide moisture proof carpet backing with integral high density cushion of thermoplastic, urethane, or PVC.

C302005 1.4 CARPET PERFORMANCE CHARACTERISTICS

a. Flammability: Carpet shall meet the Critical Radiant Flux Classification of not less than 0.45 W/sq. cm. when tested in accordance with ASTM E648. Carpet shall generate less than 450 rating when tested in accordance with ASTM E662
b. Static Control: Carpet shall include a permanent static control system to control static build-up to less than 3.0 KV in accordance with AATCC-134.
c. Dimensional Stability: Carpet shall be permanently dimensionally stable with no delamination of components or any edge raveling or zippering. Edge Ravel: Minimum 1 lb. loop pile only - ASTM D-7267; Delamination: Minimum 3.5 lb. per inch of width - ASTM D-3936; Tuft Bind: Minimum 10 lb. average tuft bind for loop pile - ASTM D-1335; Tuft Bind: Minimum 8 lb. average tuft bind for (Modular Tile) loop pile - ASTM D-1335.
d. Colorfastness to Crocking: Not less than 4, wet and dry, per AATCC-165.
e. Colorfastness to Light: Not less than 4 after 40 AFU (AATCC fading units) per AATCC-16.
f. Antimicrobial Activity: Not less than 0.08-inch (2-mm) halo of inhibition for gram-positive bacteria; not less than 0.04-inch (1-mm) halo of inhibition for gram-negative bacteria; no fungal growth, per AATCC-174.
g. Appearance Retention: Provide carpet with a medium scale (>3" repeat) or large scale (>6" repeat), multi-color pattern for excellent appearance retention and soil hiding characteristics. Heathered yarn without a pattern is unacceptable unless approved by the NAVFAC Interior Designer as an accent carpet.
h. Sustainability: Provide carpets with recycled fiber content, and renewable material content in the attached cushion or backing materials certified by an independent testing agency. Recycle Content of the Total Product Weight: Must be either Pre-consumer or Post-consumer content or a combination of these. Broadloom: minimum of 10%; Modular Tile: minimum of 30%.
i. Product Sustainability Certification: To achieve superior performance in multiple environmental attribute areas, carpet must have third party certification in accordance with NSF/ANSI 140 Sustainable Carpet Assessment Standard at a "Gold" level minimum. Carpet manufacturer must supply certificate as part of the procurement documentation.
j. Indoor Air Quality: Provide carpets that meet the criteria of the CRI "Green Label Plus" Indoor Air Quality Testing Program. Carpet adhesive VOC's shall be less than 50 g/L..
k. Reclamation of existing carpet to be determined with potential vendor. When carpet is replaced, submit certification documentation from the reclamation facility to the Contracting Officer.

l. Written Warranty: Lifetime commercial warranty for texture retention and edge raveling, zippering, de-lamination is required. Seam preparation and adhesives shall be recommended by the carpet manufacturer in accordance with the warranty. Contractor shall submit a copy of the manufacturer's standard warranty to the Contracting Officer within 60 days of BOD. Government shall be a beneficiary of the terms of this warranty.
m. Texture Appearance Retention Rating (TARR): The carpet should be evaluated using ASTM D-5252, Hexapod Drum Test, as the commercial carpet test procedure and TARR classification determined by ASTM D-7330. Carpet must meet TARR ratings specified below:

Space Definition	Traffic Classification	TARR Classification
Private Offices	Moderate	> 3.0 TARR
Training, Conference, etc.	Heavy	> 3.0 TARR
Open Office, Corridors, Lobbies, etc.	Severe	> 3.5 TARR

C302005 1.5 CARPET INSTALLATION

Install carpet by one of the following methods in accordance the manufacturer's recommendations and in accordance with the Carpet and Rug Institute, CRI-104, Standard for Installation Specification of Commercial Carpet, compatible with the construction, backing, and pattern characteristics of each carpet provided.

a. Direct Glue Down Carpet Installation
b. Double Glue Down Carpet and Pad Installation
c. Carpet with Attached-Cushion Installation
d. Preapplied releasable "dry" adhesive system installation.
e. Stretch-In Carpet Installation with tack strips and pad

C302006 MASONRY AND STONE FLOORING

C302006 1.1 UNIT MASONRY FLOORING SYSTEM

Unit masonry flooring system and coordinating base shall be fired red clay brick, or chemical resistant brick unit masonry flooring. Provide unit masonry flooring systems in accordance with the Brick Industry Association recommendations and the Tile Council of America *Handbook for Ceramic Tile Installation*.

C302006 1.2 STONE FLOOR AND BASE FINISHES

C302006 1.2.1

Natural Stone Flooring and coordinating base shall be of marble,

granite, or travertine.

C302006 1.2.2

Aggregate Stone Tile and coordinating base shall be a composite of marble or granite.

C302006 1.2.3

Install stone floor and base in accordance with the recommendations of the Marble Institute of America, the Indiana Limestone Institute of America, Inc. the National Building Granite Quarries Association, Inc. in addition to the Tile Council of America *Handbook for Ceramic Tile Installation*as applicable to the type of stone being installed.

C302007 WALL BASE FINISHES

Provide a wall base for transition between floor and wall finish. If no other type of base is required, provide rubber or vinyl straight base at carpet installations, rubber or vinyl cove base at exposed concrete or resilient tile floors, and a base to match the floor material at hard surface tile floors, or as required in the project program.

C302007 1.1 RESILIENT WALL BASE FINISHES

C302007 1.1.1

All rubber wall base shall be 4 inch (100 mm) high and 1/8 inch (3.2 mm) thick as required unless indicated otherwise. The wall base shall include inside and outside corners and shall conform to ASTM F1861-98, Type TS. Provide wall base in rolls and not 4 foot lengths.

C302007 1.1.2

Flash-coved integral resilient sheet wall bases shall be installed in accordance with the manufacturers' printed instructions to include a cove stick having a minimum radius of 3/4 inch (19 mm) and finished with an approved cap strip.

C302007 1.2 CARPET WALL BASE FINISHES

Carpet wall base finishes shall consist of a strip of carpet matching or contrasting adjacent carpet, 4 inch (100 mm) high, with the top edge finished with an aluminum or vinyl edge profile; or an edge binding material matching the carpet.

C302007 1.3 WOOD BASE FINISHES

Wall base shall be a minimum of 3-1/2 inches (90 mm) high and AWI custom grade hardwood molding with mitered inside and outside corners. Refer to C302008 – 1.1.2 for wood finishes.

C302007 1.4 STONE AND MARBLE BASE FINISHES

Stone and marble wall base shall coordinate with the adjacent flooring and shall be 4 inch (89 mm) and 3/4 inch (19 mm) thick.

C302007 1.5 TILE BASE FINISHES

Coordinate tile base with ceramic wall and floor tile for color, material match and modularity. Include all pre-manufactured trim pieces, special shapes, caps, stops, and returns to provide a complete installation. Provide coordinating wall, base and floor tile for curb construction at showers.

C302008 STAIR FINISHES

C302008 1.1 RESILIENT STAIR TREADS, RISERS AND LANDINGS

Refer to C302004 for resilient landing finishes. Provide rubber risers to match treads or one piece tread/risers. Provide treads with raised patterns and visually impaired nosing inserts as required.

C302008 1.2 PORCELAIN AND STONE STAIR TREADS, RISERS AND LANDINGS

Refer to C302001 and C302006 for porcelain and stone stair finishes. Provide treads with textured surfaces or raised patterns and visually impaired nosing inserts as required.

C302008 1.3 CARPETED STAIR TREADS, RISERS AND LANDINGS

Refer to C302005 for carpeted stair finishes. Provide dense padding on treads and nosings for increased appearance retention and durability.

C302009 FLOOR TOPPINGS AND TRAFFIC MEMBRANES

Assemblies include floor toppings and membrane systems.

C302009 1.1 REFLECTIVE, CHEMICAL AND SLIP RESISTANT FLOOR SYSTEMS

C302009 1.1.1 Thin Film Floor Coating

The Designer of Record shall utilize UFGS Specification Section 09 67 23.15, *Fuel Resistive Resinous Flooring, 3-Coat System*, for the project specification submittal and for test patch, surface preparation, and installation requirements. Use MPI Product #212 "Thin Film Flooring System for Aircraft Maintenance Facilities" for product specifications.

C302009 1.1.2 Dry Shake Floor Topping

System shall be a nonferrous, non-oxidizing metallic aggregate, dry-shake surface hardener system consisting of specially processed cementitious binder, plasticizer, and water-reducing admixtures, formulated and processed under the stringent quality control of the manufacturer. The hardener shall be proportioned and sealed in standard moisture resistant bags. The manufacturer shall guarantee their aggregate to be free of rust, corrosive materials, oil, petroleum, or other water-base materials when delivered. The manufacturer shall replace any material found to

contain any such materials, or any other material, which is deemed unsatisfactory. The manufacturer shall provide a full-time technical representative, qualified in designing and adjusting concrete mixes, to assist in the application of the aggregate surface hardener system. A mono molecular surface evaporation retardant film, as recommended by ACI 305R and ACI 308R, shall be provided for use under drying conditions, due to high concrete or ambient temperatures, low humidity, high winds, and so forth. This includes heated interiors during cold weather, to aid in maintaining concrete moisture during the early placement stages of the plastic concrete. Retarder shall be certified by its manufacturer to be compatible with the surface hardener and shall be used in accordance with the manufacturer's recommendations. Curing and sealing materials and procedures shall be as recommended by the manufacturer of the aggregate surface hardener system and ASTM C309 or ASTM C1315. All installation shall be in accordance with manufacturer’s instructions. Coordinate the concrete mix design with the dry shake floor topping manufacturer to optimize bond of floor finish to slab. Spread topping mix with a mechanical spreader.

C302010 HARDENERS AND SEALERS

C302010 1.1 HARDENED AND SEALED CURE CONCRETE FLOORS

Harden and seal concrete floors in accordance with the finished floor manufacture requirements. Utilize other methods of concrete curing if the floor finish manufacturer does not recommend a chemical hardener or sealer. Concrete floors that can utilize a hardener-sealer and will be exposed to traffic shall receive a minimum of two coats of hardener-sealer curing agent for dust protection. These hardener-sealer-cured floors shall be finished with a curing agent that shall penetrate the concrete to permanently seal the floor against moisture and the penetration of contaminants. The curing agent shall be non-toxic, non-flammable, and non-combustible and shall be installed in accordance with the manufacturer’s printed instructions. The finished floor shall be dust-free.

C302010 1.2 COLORED CONCRETE FLOORS

Colored concrete floors shall include a colored pigment either applied as a topical dye; or a concrete topping with integral color pigment; or a dry shake pigment application, as required by the project program. Concrete floor shall be trowel applied in a pattern, or shall include grit for slip resistance.

C302011 RAISED ACCESS FLOORING

C302011 1.1 FLOORING SUPPORT SYSTEM

Design support system to allow for 360 degree clearance in laying out cable and cutouts for service to machines and so that panel and stringer together take up maximum of 2 inches (50 mm).

C302011 1.1.1 Pedestals, Shafts, and Caps

Provide pedestals of steel or aluminum, each capable of carrying 4,960 pounds (2250 kg) axial load without permanent deformation. Provide permanent factory applied corrosion resistant finish for pedestals made of ferrous materials. Provide base plate not less than 4 inch by 4 inch by 1/8 inches (100 mm by 100 mm by 3 mm) thick, welded to shaft of pedestal. Approved die-formed bases of equivalent load spreading capacity and bearing area may be provided in lieu of flat base plates. Provide shafts to support design loads. Provide Pedestal Caps designed to fit precisely over pedestal shafts and to interlock with panels and stringers to prevent tilting, rocking, or vibrating of panels when live load is applied. Provide pedestals with adjusting threads or other devices that will permit leveling of floor system with adjustment range of approximately 2 inches (50 mm). Provide lock nuts, set screws, or other locking devices to positively lock final pedestal vertical adjustments in place, independent of floor panels. Do not use self-tapping screws, snap type connections, or spring-action lock-nuts. All adhesives used shall be as recommended by the manufacturer.

C302011 1.1.2 Stringers

Fabricate from rolled or formed galvanized steel conforming to ASTM A591/A592M. Incorporate interlocking pedestal and stringers in pedestal stringer system, providing positive seating of panels to prevent tilting, rocking, or vibrating of panels when live load is applied. Provide stringers that can be added or removed after floor is in place. Fasten end of each stringer and mid-point of each four foot stringer positively to pedestal heads, using manufacturer's standard screws. Provide screws that are removable from top.

C302011 1.2 FLOOR PANELS

Provide interchangeable 24 inch by 24 inch (610 mm by 610 mm) square module panels capable of supporting design loads. Panels shall be of weight that can readily be removed and handled by one person using lifting tool furnished by access floor manufacturer. Panel finish surface to be Grade HW 120 high pressure plastic laminate conforming to NEMA LD. Use either factory attached carpet tile, factory attached - static dissipative grounded carpet tile or field installed carpet tile with seams overlapping the access floor grid panels or to transition areas where only part of the space is recessed for access floor.

a. Aluminum Panels - ASTM B85, SC84A, die-cast or extruded construction for rooms with MRI equipment.

b. Steel Panels - Die-formed construction. Weld flat steel top sheet to one or more formed steel stiffener sheets. Provide zinc-coating conforming to ASTM A591/A591M, Class C, with manufacturer's standard corrosive resistant electrically conductive epoxy paint finish . Wood, plastic and other combustible products are prohibited.

c. Cementitious or Concrete Filled Formed Steel Panels Entirely non-combustible steel shell and cementitious or concrete fill, corrosive resistant inside and out. Seal cut edges in accordance with

manufacturer's recommendations.

d. All panels to be manufactured in USA and individually labeled "Made in USA"

C302011 1.2.1 Gravity Held Factory Finished Panels with Bolted Stringer Understructure

Fasten end of each stringer and mid-point of each four foot stringer positively to pedestal heads, using manufacturer's standard screws. Provide corner lock system for all general office (bare for carpet tile) applications with screws that are removable from top.

C302011 1.3 GROUNDING

Ground access floor system for safety hazard and static suppression. Connection of access floor support system to building grounding electrodes is specified in another section of this RFP. Provide positive contact between components for safe, continuous electrical grounding of entire floor system. Total system resistance from wearing surface of floor to building grounding electrode shall be within the range of 0.5 megohms to 20,000 megohms for computer rooms, electronics offices, data centers and control rooms, 0.2 megohms to 2.0 megohms for clean rooms and laboratories.

C302011 1.4 THRESHOLD(S)

Provide interior thresholds of nonferrous materials where flooring materials or floor levels change.

C302011 1.5 RAMPS

Provide ramps of required slip resistance and slope conforming to ATBCB ADA Title III.

C302011 1.6 INSTALLATION

Install access floor system and accessories under supervision of the access flooring manufacturers authorized representative to insure rigid, firm installation free of vibration, rocking, rattle, squeaks, and other unacceptable performance. Install in accordance with the following;

a. Set pedestal in adhesive as recommended by the access flooring manufacturer to provide full bearing of the pedestal base on the sub floor.
b. Layout floor panel installation to keep the number of cut panels at the floor perimeter at a minimum. Scribe panel assemblies at the perimeter to provide a close fir with no voids greater than 1/18" where panels abut vertical surfaces. At spaces where access floor connects to the walls provide connection detail that seals the access floor to the wall to reduce air leakage.
c. Secure grid member to pedestal heads in accordance with access floor manufacturers instructions.
d. Thoroughly clean up dust, dirt and construction debris caused by

floor installation.

e. Level installed access floor to within 0.060" of true level over the entire area and within 0.10" in any 10" distance.

C3030 CEILING FINISHES

Refer to C3040 "INTERIOR PAINTING AND SPECIAL COATINGS" for painted ceiling finishes.

C303001 ACOUSTICAL CEILING TILES AND PANELS

C303001 1.1 ACOUSTICAL CEILING PANELS

All acoustical ceiling panels shall be 24 inch by 24 inch (610 mm by 610 mm), with a minimum light reflectance of .75 (except as noted), Class A, flame spread 25 or less and smoke development of 50 or less, ASTM E84. All acoustical ceiling panels shall have minimum 60% recycled content except as noted. Acoustical ceiling panels shall conform to ASTM E1264. Provide square edge except as noted.

C303001 1.1.1

For typical open office areas, conference rooms, executive offices, provide non-asbestos mineral composition acoustical ceiling panels of Type III with factory-applied standard washable painted finish or Type IV with factory-applied plastic membrane-faced vinyl, Form: 1, 2, or 3. Provide reveal edge tiles unless otherwise noted.

C303001 1.1.2

For typical humid areas such as toilets, kitchens, fitness and locker rooms, provide non-asbestos mineral or glass composition acoustical ceiling panels bonded with ceramic, moisture resistant thermo-setting resin, or other moisture resistant material with factory-applied standard washable painted finish; and recycled content: minimum of 40%.

C303001 1.1.3

For areas with very high humidity, heavy soiling, staining, impact abrasion, or limited security concerns, such as bachelor's quarters, laundry rooms, or maintenance shops, provide Type V, Steel or Type VII, aluminum faces with white baked on enamel finish, and non-asbestos mineral composition absorbent backing.

C303001 1.1.4

For areas requiring a concealed grid system, provide non-asbestos mineral composition acoustical ceiling panels of Type III with factory-applied standard washable painted finish or Type IV with factory-applied plastic membrane-faced vinyl, Form: 1, 2, or 3; Size: 12 inch by 12 inch by 5/8 inch (305 mm by 305 mm by 19 mm), Edge: for concealed grid installation.

C303001 1.1.5

Provide NRC and CAC ratings as follows:

Type of space	Minimum NRC	Minimum CAC
Open Office Areas, Auditoriums	.70	35-39
Conference Rooms, Classrooms	.60	35-39
Activity spaces, Lobbies, Corridors	.60	35-39
Executive and Private Offices	.60	35-39
Toilets	.50	35-39
Kitchens	.50	35-39
Fitness/Locker Rms	.50	35-39
All other spaces	.50	35-39

Base the tested NRC value on Mounting Type E-400 of ASTM E795.

C303002 GYPSUM WALLBOARD CEILING FINISHES

Conform to specifications, standards and requirements in accordance with Gypsum Association GA 214, GA 216 and GA 224. Provide asbestos free materials only. Provide featured edge gypsum board on all gypsum surfaces that flatness of joints will be visible, such as up-lighted ceilings, window lighted ceilings, and as recommended by the manufacturer. Provide Type X gypsum board in fire rated assemblies.

C303002 1.1 REGULAR GYPSUM BOARD

ASTM C36/C36M and ASTM C1396/C1396M, 1/2 or 5/8 inch(12.7 mm or 15.9 mm) thick, tapered edge. Provide 5/8 inch (15.9 mm) for all projects except for single family residential, which may utilize 1/2 inch (12.7 mm) if other requirements, such as sound control, are met.

C303002 1.2 MOISTURE RESISTANT GYPSUM BOARD

ASTM C630/C630M, 1/2 or 5/8 inch (12.7 mm or 15.9 mm) thick, tapered edges. Use for ceilings in humid areas. Do not use as a substrate in

tiled areas where tile will be exposed to direct moisture contact or condensation accumulation. Support moisture resistant gypsum board at 12 inches (305 mm) on center. Provide 1/2 inch (12.7 mm) for single-family residential projects only. Provide 5/8 inch (15.9 mm) for all other projects.

C303002 1.3 FOIL BACKED GYPSUM BOARD

ASTM C1396/C1396M 1/2 or 5/8 inch (12.7 mm or 15.9 mm) thick in residential construction, and 5/8 inch (15.9 mm) thick in non-residential construction, tapered edges for layers exposed to view, square edges for concealed layers. Seal joints in foil backing to other panels and adjoining materials as recommended by the panel manufacturer.

Alternative to foil backed gypsum board in Secured Areas: Field applied foil faced barrier material is an acceptable alternative for pre manufactured foil backed gypsum board. Provide a continuous composite multilayer barrier with a woven polyethylene sheet sandwiched between two sheets of solid reflective aluminum surfaces. Shielding effectiveness tested in accordance with IEEE 229/ ASTM D4935. Install barrier in accordance with manufactures instructions

C303002 1.4 CEMENTITIOUS BACKING UNITS

ANSI A108.11 and ANSI A118.9, 1/2 or 5/8 inch (12.7 mm or 15.9 mm) thick; use for adhesive applied ceramic tile in wet areas (tubs, shower enclosures, saunas, steam rooms, gang shower rooms, or for shower areas with a veneer plaster finish. Support cementitious backing units at 12 inches (305 mm) on center. Provide screws specifically designed for use with cement panels.

C303002 1.5 IMPACT RESISTANT GYPSUM BOARD

Reinforced gypsum panel with imbedded fiber mesh or polycarbonate resin thermoplastic backing, 5/8 inch (15.9mm) thick, tapered edges, in accordance with Structural Failure Test; ASTM E695 or ASTM D2394 and Indentation Test; ASTM D5420 or ASTM D1037. For use whenever gypsum board partitions are allowed for barracks, training facilities, and industrial facilities. Provide metal framing of 20-gauge minimum. Provide fasteners that meet manufacturer requirements and specifications. Impact resistant gypsum board shall have a flame spread rating of 25 or less and a smoke developed rating of 50 or less, ASTM E84. Finish with a high strength veneer plaster.

C303002 1.6 TEXTURED CEILING FINISH SYSTEM

Applied textured ceiling finish shall be plaster based. Refer to paragraph "C301002 – 1.1 GYPSUM PLASTER" for finish requirements.

C303002 1.7 JOINT TREATMENT

ASTM C475, Joint compound shall be specifically formulated and manufactured for use with and compatible with tape, substrate and fasteners as recommended by the manufacturer. Tape and finish gypsum board in accordance with ASTM C840, GA 214 and GA 216. Provide

premanufactured joints at all structural expansion joints, crack control joints, and change of materials as recommended by the manufacturer and in accordance with GA 216.

C303002 1.8 FASTENERS

ASTM C514, Fasteners shall be compatible with each type of gypsum board material as recommended by the gypsum board manufacturer and in accordance with GA 216 and GA 224.

C303002 1.9 ACCESSORIES

ASTM C1047, Fabricate from corrosion protected steel or plastic designed for intended use. Accessories manufactured with paper flanges are not acceptable. Flanges shall be free of dirt, grease, and other materials that may adversely affect bond of joint treatment. Provide prefinished or job decorated materials. Install as recommended by GA 214, GA 216 and GA 224.

C303002 1.10 LEVEL OF FINISH

C303002 1.10.1

Tape and finish gypsum board in accordance with ASTM C840, GA 214 and GA 216. Ceilings to receive a heavy-grade wall covering or heavy textured finish before painting shall be finished to GA 214, Level 3. Ceilings without critical lighting to receive flat paints, light textures, or wall coverings shall be finished to GA 214, Level 4. Unless otherwise specified, all gypsum board walls, partitions and ceilings shall be finished to GA 214, Level 5. Provide joint, fastener depression, and corner treatment. Do not use fiberglass mesh tape with conventional drying type joint compounds; use setting or hardening type compounds only. Provide treatment for water-resistant gypsum board as recommended by the gypsum board manufacturer.

C303002 1.10.2

Wherever gypsum board is to receive eggshell, semigloss or gloss paint finish, or where severe, up or down lighting conditions occur, finish gypsum wall surface to GA 214 Level 5. In accordance with GA 214 Level 5, apply a thin skim coat of joint compound to the entire gypsum board surface, after the two-coat joint and fastener treatment is complete and dry.

C303003 PLASTER CEILING FINISHES

C303003 1.1 VENEER PLASTER CEILING FINISHES SYSTEM

Veneer plaster ceilings shall be gypsum plaster veneer finish to gypsum base finishes. Refer to Section C3040 for paint system and gloss level. Provide gypsum neat plaster, gypsum ready-mixed plaster, or high strength gypsum plaster base coat conforming to ASTM C28. High strength gypsum plaster shall have a compressive strength of not less than 2,500 psi, when tested dry in accordance with ASTM C472.

C303004 WOOD CEILINGS

Not Used.

C303005 SUSPENSION SYSTEMS

C303005 1.1 EXPOSED SUSPENDED ACOUSTICAL CEILING GRID

Provide 24 inch by 24 inch (610 mm by 610 mm) aluminum or steel non-corroding intermediate-duty standard grid system for lay-in acoustical panels (ASTM C635). Finish shall be factory applied white baked enamel. Provide manufacturer's hold down clips for fire rated assemblies and wall or edge molding. Hang grid system as recommended by manufacturer but with no less than 0.106 inch (2.7 mm) diameter wires (ASTM A641A, A641M, Class 1), or with one by 3/16 inch (4.76 mm) galvanized steel straps conforming to ASTM A653A, A653M (for light commercial zinc coating) or ASTM A366A, A366M (with an electrodeposited zinc coating, Type RS). Use ASTM A580/A580M, composition 302 or 304, condition annealed stainless steel, 0.106 inches (2.7 mm) in diameter over high humidity areas such as commercial kitchens and pools. Install suspended grid system with acoustical sealant (ASTM C843, nonstaining and ASTM C636). Recycled content shall be a minimum of 25%.

C303005 1.2 CONCEALED SUSPENDED ACOUSTICAL CEILING GRID

Provide 12 inch by 12 inch (305 mm by 305 mm) aluminum or steel non-corroding intermediate-duty concealed grid system for lay-in acoustical panels (ASTM C635). Finish shall be factory applied white baked enamel. Provide manufacturer’s wall or edge molding. Hang grid system as recommended by manufacturer but no less than with 0.106 inch (2.7 mm) diameter wires (ASTM A641A, A641M, Class 1), or with one by 3/16 inch (4.76mm) galvanized steel straps conforming to ASTM A653A, A653M (for light commercial zinc coating) or ASTM A366A, A366M (with an electrodeposited zinc coating, Type RS). Install suspended grid system with acoustical sealant (ASTM C843, nonstaining) and in accordance with ASTM C636. Recycled content shall be a minimum of 25%.

C303005 1.3 SUSPENDED AND FURRED CEILING SYSTEMS

ASTM C841 (for lath); ASTM C645 (for GWB).

Provide steel materials for metal support systems with galvanized coating per ASTM A653/A653M, G60; aluminum coating ASTM A463/A463M, T1-25; or a 55% aluminum-zinc coating. Provide suspended ceiling framing in accordance with ASTM C754, except framing members shall be 16 inches (400mm) unless otherwise noted.

C303006 METAL STRIP CEILINGS

Not Used.

C303090 OTHER CEILING AND CEILING FINISHES

C3040 INTERIOR COATINGS AND SPECIAL FINISHES

Apply coatings directly to all non-prefinished surfaces of the interior

construction. Comply with Master Painters Institute requirements for surface degradation analysis, surface preparation, paint and coating selection, paint application restrictions for substrate materials, and paint application.

C304001 GENERAL REQUIREMENTS

All paint shall be suitable in accordance with the Master Painter Institute (MPI) standards for the interior architectural surface being finished. The current MPI, "Approved Product List" as of the date of contract award, will be used to determine compliance with the submittal requirements of this specification. The Contractor may choose to use a more current MPI "Approved Product List"; however, only one list may be used for the entire contract. All coats on a particular substrate, or a paint system, must be from a single manufacturer. No variation from the MPI Approved Products List is acceptable.

Select paint systems for the project in accordance with the MPI Architectural Painting Decision Tree available on the Whole Building Design Guide. Use this interactive MPI Decision Tree website to identify applicable paint system(s) for the project. The MPI Decision Tree identifies paint systems for each interior or exterior coated surface in "Normal" or "Aggressive" environmental conditions and generally lists the applicable paint systems in descending order of performance. The paint system at the top of each substrate list generally indicates the highest performing acceptable coating system.

Choose the "Aggressive" environmental conditions in the MPI Decision Tree for exterior systems that are used in moist humid conditions, abrasive conditions, chemical exposure conditions, or within five miles proximity of the ocean or a body of water. Also use "Aggressive " environmental conditions in interior spaces that are exposed to in moist humid conditions, abrasive conditions, chemical exposure conditions, such as bathrooms, shower rooms, kitchens, chemical storage area, swimming pools, laundry, sanitary areas, commercial kitchens, industrial production areas, and hospital operating rooms provide paint systems that comply with the MPI Decision Tree "Aggressive" environmental conditions.

Comply with the following rules when determining the appropriate paint or coating system from the MPI Decision Tree:

a. Some of these paint systems are identified with a "NAVFAC Anchor". This "NAVFAC Anchor" indicates the minimum performing system that NAVFAC will accept for that substrate and environmental conditions.

b. When multiple "NAVFAC Anchors" are indicated on a certain substrate and environmental condition, provide the "NAVFAC Anchor" paint or coating system that is most appropriate for the facility use.

c. If only one MPI Decision Tree choice is available for a certain substrate and environmental condition with no indicated NAVFAC preference, provide that sole option for NAVFAC projects.

d. If the MPI Decision Tree provides multiple choices and no NAVFAC preference is denoted, refer to the Additional RFP Requirements below to determine level of performance.

e. If the MPI Decision Tree does not identify all paint system applicable to the facility, utilize the *MPI Architectural Painting, Exterior Systems Manual* to identify other appropriate paint systems for the project. Utilize the "Premium Grade" systems and comply with all limitations stated in the MPI "Approved Product List" for each paint product. Products having an MPI VOC Range E3 shall be given preferential consideration over lower VOC Ranges. Use higher performing paint systems unless the lower performing paint system can be justified based on a lifecycle cost to include surface preparation, application, disposal, environmental impact, and required recoating cycles. Only use paint products that have been tested for MPI'S "DETAILED PERFORMANCE" or "EVALUATED PERFORMANCE ". Do not use products that have only been tested for "INTENDED USE".

f. If an "Aggressive" environmental condition option is not available in the MPI Decision Tree for a certain substrate, use the "Normal" environmental condition option.

g. Refer to the Additional Exterior Paint and Coating System Requirements below for further system requirements.

Paints and coatings shall comply with Master Painters Institute Green Performance Standard GPS-1-12 which is available at the following website; http://www.specifygreen.com/EvrPerf/EnvironmentalPerformance.html . Provide Interior flat intermediate and topcoats of a maximum of 50 g/L VOC and interior non-flat intermediate and topcoats of a maximum 150 g/L VOC. Choose paints that provide performance and are environmentally friendly by using total VOC budgeting to analyze the total impact of all flat, non-flat and special purpose coatings on the project.

C304001 1.1 MPI GLOSS LEVELS

Gloss levels shall comply with the MPI system of determining gloss as defined in the Evaluation sections of the MPI Manuals. Utilize the performance characteristics of the paint gloss and sheen to categorize paint rather than manufactures' description of his product. The MPI Gloss Levels are indicated by the notation G1, G2, G3, G4, G5, G6, or G7. G1 is not used by Navy.

The MPI Decision Tree indicates a default gloss level for each paint system, however consider the appearance, anticipated conditions, and need for cleaning when choosing the correct gloss level for each coated surface of the project. Comply with the following guidance in choosing the appropriate gloss level.

a. Use G2 "Velvet-like" Flat for ceilings, residential walls away from human contact and low traffic areas.

b. Use G3 "Eggshell-like" in high traffic areas for ceilings and walls, when human contact with the wall is expected but limited, and for dark accent colors.

c. Use G5 Semigloss for walls, doors and trim for high durability and clean ability and when a surface is expected to have routine human contact.

d. Use G6 Gloss only in special situations such as piping

identification or special effects.

The MPI Gloss and Sheen Standard values are measured per ASTM D523, and are as follows:

Gloss Level Number	Gloss@ 60 Degrees	Sheen@85 Degrees
Gloss Level 1(G1) – Matte or Flat	Max.5 units	Max.10 units
Gloss Level 2(G2) – "Velvet-like" Flat	Max. 10 units	10-35 units
Gloss Level 3(G3) – "Eggshell-like"	Max. 10-25 units	10-35 units
Gloss Level 4(G4) - "Satin-like"	Max. 20-35 units	Min. 35 units
Gloss Level 5(G5) - Semi-Gloss	35-70 units	
Gloss Level 6(G6) – Gloss	70-85 units	
Gloss Level 7(G7) – High Gloss	More than 85 units	

C304001 1.2 MPI SYSTEM DESIGNATIONS AND ABBREVIATIONS

The MPI coating system number in each Division is found in either the *MPI Architectural Painting Specification Manual*or the *Maintenance Repainting Manual*and defined as an interior system (INT/RIN).

a. INT designates an interior coating system for new surfaces.
b. RIN designates an interior coating system used in repainting projects or over existing coating systems.
c. DSD – the MPI short-term designation for Degree of Surface Degradation as defined in the Assessment sections in the *MPI Maintenance Repainting Manual*. Degree of Surface Degradation designates the MPI Standard for description and appearance of existing condition of surfaces to be painted. This DSD classification is used to determine the proper surface preparation necessary for painting.

C304001 1.3 SURFACE PREPARATION

Comply with the "Interior Surface Preparation" section of the *MPI Architectural Painting Specification Manual*or the "Interior Surface Preparation" section of the *MPI Maintenance Repainting Manual*. All suggestive language such as "may" or "should" are deleted from the standard and "must" or "shall" inserted in its place. Suggestive language such as "recommended" or "advisable" is deleted from the standard and "require" or 'required" inserted in its place. The results of these wording substitutions change this document to required procedures. For surface preparation, determine a MPI DSD Assessment of each surface and comply with the MPI Surface Preparation Requirements relating to the assessments. Notwithstanding MPI requirements, clean interior ferrous metal to a SSPC SP 10 level (near white) that have aggressive chemical environments (SSPC Zones 3A, 3B, 3C, 3D, and 3E) or waterfront exposure to open structures (SSPC Zones 2A or 2B). Examples of these types of facilities are indoor water training facilities, indoor swimming pools, and open or mostly open waterfront maintenance buildings/ waterfront warehouses/ canopies.

Remove dirt, splinters, loose particles, grease, oil, and other foreign matter and substances deleterious to coating performance as specified for each substrate before application of paint or surface treatments.

For existing buildings, use MPI *Maintenance Repainting Manual* to determine the coatings that need to be removed. Remove deteriorated or loose coatings before repainting begins. Oil and grease shall be removed prior to mechanical cleaning. Cleaning shall be programmed so that dust and other contaminants will not fall on wet, newly painted surfaces. Exposed ferrous metals such as nail heads on or in contact with surfaces to be painted with water-thinned paints, shall be spot-primed with a suitable corrosion-inhibitive primer capable of preventing flash rusting and compatible with the coating specified for the adjacent areas.

C304001 1.4 ADDITIONAL INTERIOR PAINT AND COATING SYSTEMS

In addition to the MPI Decision Tree, comply with the following paint system requirements:

C304001 1.4.1 PAVEMENT COATINGS

(1) INT 3.2 Concrete Horizontal Surfaces

Normal Environmental Conditions; Pigmented

Provide road and parking lot pavement marking in accordance with UFGS 32 17 23.00 20, *Pavement Markings.*

C304001 1.4.2 DRESSED LUMBER

Provide Pigmented systems for Composite Wood Doors (Fiberboard) and trim. Do not use Normal/ Aggressive; Clear and Normal/ Aggressive Stain finishes.

C304007 SPECIAL COATINGS TO WALLS

C304007 1.1 HIGH PERFORMANCE ARCHITECTURAL COATING (HIPAC)

HIPAC shall be a durable, organic system applied to a continuous (seamless) high-build film and cure to a hard glaze finish. They shall be resistant to continuous heat and humidity, abrasion, staining, chemicals, and biological growth. Coating shall be installed as a complete system, and as recommended by the manufacturer and have a flame spread index of not more than 25 and a smoke developed index of not more than 50 when tested in accordance with ASTM E84.

C304007 1.1.1

Two-component, epoxy-polyamide shall be chemical and corrosion-resistant, adhesive, alkali-resistant, and water-tolerant for metal, wood, concrete, masonry surfaces, and painted surfaces where high gloss or glaze type finish, extreme workability and resistance to abrasion and stains is required. Minimum dry film thickness is 3 mils for each of two coats. Furnish Gloss or Semigloss finish. Maximum volatile organic compounds (VOC) shall be 340 grams/liter.

C304007 1.1.2

Single Component, Moisture-Curing Urethane shall be a flexible, abrasion- and impact-resistant, use for floors, walls, machinery, equipment and other surfaces where good abrasion resistance, color retention, gloss retention, graffiti resistance and good resistance to acids, alkalis, solvents, strong cleaners and sanitizers, fuel and chemicals are necessary. Can also be used on concrete floors, brick and masonry surfaces (properly conditioned), metals (properly primed), and wood (properly prepared and sealed.) Minimum dry film thickness is 3 mils for each of 3 coats. Use Type I, Aliphatic, for exterior use except for oily or resinous exterior wood surfaces. Use Type II, Aromatic, for interior use.

C304007 1.2 IMPACT RESISTANT WALL FINISHES

Provide textured acrylic architectural coating system: a seamless textured acrylic water-based coating system, having a thickness of at least 20 mils, on surfaces scheduled to receive it. System shall be composed of pure acrylic polymers, silica dioxide, ethylene dioxide and pigments. System shall have a Barcoll Hardness Index of 38.0 or greater, smoke contribution of 7.0 or less, and have water vapor permeability of 27.5 English Perms or greater when tested in accordance with ASTM E96. (MPI 42) Coating system must have been on the market and successfully used in commercial applications for a minimum of 10 years.

C304007 1.2.1 CMU Application

High Performance seamless interior acrylic coating system shall be used as an interior wall finish over CMU that has been joint-filled and smoothed with a water resistant manufactured recommended compound. Coating system to be mold and mildew resistant, flame spread 15 or less per ASTM-E84 and have a minimum final film thickness of 7 mils.

C304007 1.2.2 Gypsum Wallboard Application

High Performance seamless interior acrylic coating system shall be used as an interior wall finish over gypsum wallboard. Do not prime or seal the drywall except as specifically recommended by the texture acrylic coating manufacturer. Coating system to be mold and mildew resistant, flame spread 8.5 or less per ASTM-E84 and have a minimum final film thickness of 20 mils.

C304007 1.2.3 Installation

Finish may only be installed by factory-qualified applicators in accordance with the manufacturer's printed instructions and recommendations, to fulfill warranty requirements. All coating system components shall be products of the same manufacturer.

A minimum of one sample wall application shall be provided. Edges at door and window frames shall be feathered; hard edges are unacceptable. Upon approval of the sample wall by the project manager, the application shall serve as a standard for the remaining work.

The manufacturer's certified representative shall provide an on-site training demonstration of the application and care of the finish for the end-user's facility manager or other representatives.

-- End of Section --

SECTION D20

PLUMBING
11/10

D20 GENERAL

RFP Part 3 including the Engineering System Requirements (ESR) provide project specific requirements. The RFP Part 4 Performance Technical Sections (PTS) provide generalized technical requirements that apply to multiple facility types and include more requirements than are applicable to this project. Therefore RFP Part 4 requirements that correspond and further define the RFP Part 3 requirements are specific to this project other RFP Part 4 requirements are not required.

D20 1.1 NARRATIVE

This section must be used in conjunction with all parts of the Design Build (D/B) Request for Proposal (RFP) to determine the full requirements of this solicitation.

This section includes the construction of interior plumbing systems. This section covers installations inside the facility and out to the five foot line. See Section G30, *Site Mechanical Utilities*, for continuation of systems beyond the five foot line.

D20 1.2 PLUMBING DESIGN GUIDANCE

Provide the design and installation in accordance with the following references. This Performance Technical Specification (PTS) adds clarification to the fundamental requirements contained in the following Government Standards. The general requirements of this PTS section are located in PTS Section Z10, *General Performance Technical Specification*.

D20 1.2.1 Government Standards

Federal Energy Management Program (FEMP)

UNIFIED FACILITIES CRITERIA (UFC)

UFC 1-200-01	General Building Requirements(A reference in this PTS section to UFC 1-200-01 requires compliance with the Tri-Service Core UFCs that are listed in UFGS Section 01 33 10.05 20, which includes the following significant UFC(s):UFC 3-401-01, Mechanical Engineering UFC 3-420-01, Design: Plumbing Systems)

D20 1.3 DESIGN SUBMITTALS

Design Submittals shall be in accordance with Z10, *General Performance Technical Specifications*, UFGS section 01 33 10.05 20, *Design Submittal Procedures*, FC 1-300-09N, *Navy and Marine Corps Design Procedures* and UFC 3-401-01, *Mechanical Engineering*.

D20 1.4 CONSTRUCTION SUBMITTALS

Submit construction submittals in accordance with PTS section Z10, *General Performance Technical Specifications*. In addition to the Z10 requirements, the Designer of Record (DOR) shall approve the following construction submittals as a minimum:

Fixtures, equipment, and OMSI information for all equipment and fixtures.

D2010 PLUMBING FIXTURES

Plumbing fixtures shall be provided in accordance with the IBC, IPC, and as specified.

D201001 WATER CLOSETS

D201001 1.1 FLUSH VALVE WATER CLOSETS

ASME A112.19.2, white vitreous china, siphon jet. Provide ASME A112.19.5 trim. Provide self-closing metering type flush valve, unless electronic flush control is specified in the ESR Section D20. Electronic flush control shall conform to UL 1951 and ASSE 1037. Flush valve shall not exceed 1.28 GPF (4.8 LPF). Handicapped fixture mounting height and appurtenances shall be in accordance with UFAS and ADAAG.

D201001 1.2 DUAL FUNCTION FLUSH VALVE WATER CLOSETS

ASME A112.19.2, white vitreous china, siphon jet. Provide ASME A112.19.5 trim. Provide self-closing metering type dual function flush valve, unless electronic flush control is specified in the ESR Section D20. Electronic flush control shall conform to UL 1951 and ASSE 1037. Dual function flush valve shall provide a flush of 0.8 to 1.1 GPF (3.0 to 4.2 LPF) or 1.28 GPF (4.8 LPF). Maximum flush volume shall not exceed 1.28 GPF (4.8 LPF). Handicapped fixture mounting height and appurtenances shall be in accordance with UFAS and ADAAG.

D201001 1.3 FLUSH TANK WATER CLOSETS

ASME A112.19.2, white vitreous china, siphon jet. Provide ASME A112.19.5 trim. Water flushing volume of the water closet shall not exceed 1.28 GPF (4.8 LPF). Handicapped fixture mounting height and appurtenances shall be in accordance with UFAS and ADAAG.

D201001 1.4 DUAL FUNCTION FLUSH TANK WATER CLOSETS

ASME A112.19.2, white vitereous china, siphon jet. Provide ASME A112.19.5 trim. Dual function flush tank water closet shall provide a dual flush that allows a flush of 0.8 to 1.1 GPF (3.0 to 1.6 LPF) or

1.28 GPF (4.8 LPF). Maximum flush tank volume per flush shall not exceed 1.28 GPF (4.8 LPF). Handicapped fixture mounting height and appurtenances shall be in accordance with UFAS and ADAAG.

D201002 URINALS

D201002 1.1 FLUSH VALVE URINALS

ASME A112.19.2, white vitreous china, wall-mounted, wall outlet, siphon jet, integral trap, extended side shields. Provide large diaphragm (not less than 2.625 inches (66 mm) upper chamber inside diameter at the point where the diaphragm is sealed between the upper and lower chambers) flush valve of chrome plated cast brass conforming to ASTM B 584, including vacuum breaker and angle (control-stop) valve. Maximum flush valve volume per flush shall not exceed 0.5 gallons per flush (1.9 lpf). Provide ASME A112.19.5 trim and ASME 112.6.1M concealed chair carriers. Provide self-closing metering type flush valve, unless electronic flush control is specified in the ESR Section D20. Electronic flush control shall conform to UL 1951 and ASSE 1037.Handicapped fixture mounting height and appurtenances shall be in accordance with UFAS and ADAAG.

D201002 1.2 NON WATER USE URINALS

ASME A112.19.2, white vitreous china, wall-mounted, wall outlet, nonwater using, integral drain line connection, with sealed replaceable cartridge or integral liquid seal trap insert. The urinal and trap assembly shall maintain a sufficient barrier of a biodegradable immiscible liquid to provide the trap seal and inhibit the backflow of sewer gases. For urinals that use a replaceable cartridge, provide four additional cartridges for each urinal installed. Provide an additional quart of biodegradable liquid for each urinal installed. Provide ASME A112.6.1M concealed chair carriers. Installation and testing shall be in accordance with the manufacturers’ recommendations. Drain lines that connect to the urinal outlet shall not be made of copper tube or pipe. Urinal design and installation shall be ADA compliant. Slope the sanitary sewer branch line for non-water use urinals a minimum of 1/4-inch per foot. Manufacturer shall provide an operating manual and onsite
training for the proper care and maintenance of the urinal.

D201003 LAVATORIES

D201003 1.1 COUNTERTOP LAVATORIES

Unless integral bowl is specified elsewhere, lavatories shall be white, ASME A112.19.2 vitreous china lavatories with minimum dimensions of 20 inches (508 mm) wide x 18 inches (457 mm) front to rear, and selfrimming
type. Provide ASME 112.18.1 copper alloy centerset faucets
unless self closing metering or electronic control is specified in ESR section D20. Provide with aerator, adjustable P-traps, and perforated grid strainers, unless pop-up drain fittings are specified in ESR section D20.

D201003 1.2 WALL-MOUNTED LAVATORIES

ASME A112.19.1, white enameled cast-iron or ASME A112.19.2 white vitreous china with ASME A112.6.1M concealed arm carrier support, with minimum dimensions of 20 inches wide by 18 inches (508 mm wide by 457 mm) front to rear. Provide ASME 112.18.1 copper alloy centerset faucets unless self closing metering or electronic control is specified in ESR section D20. Provide with aerator, adjustable P-traps, and perforated grid strainers, unless pop-up drain fittings are specified in ESR section D20.

D201003 1.3 HANDICAPPED LAVATORIES

Same as Paragraphs 1.1 or 1.2, except height and appurtenances shall be in accordance with UFAS and ADAAG.

D201004 SINKS

D201004 1.1 COUNTERTOP SINKS

ASME A112.19.3 sink, 20 gage stainless steel with integral mounting rim, minimum dimensions of 33 inches (840 mm) wide for two compartment or 21 inches (560 mm) wide for one compartment by 21 inches (560 mm) front to rear, with ledge back and undersides coated with sound dampening material. Provide top-mounted ASME A112.18.1 copper alloy faucets, swing spout with aerator, and stainless steel drain outlets with cup strainers. Provide adjustable P-trap with drain piping to vertical vent stack. If specified in ESR section D20, provide UL 430 waste disposer unit in right compartment.

D201004 1.2 SERVICE SINKS

ASME A112.19.1, white enameled cast-iron or ASME A112.19.2 white vitreous china, wall mounted and floor supported by wall outlet castiron P-trap, minimum dimensions of 22 inches (560 mm) wide by 18 inches(457 mm) front to rear with 9 inch (230 mm) splashback, and stainless steel rim guard. Provide ASME A112.18.1 copper alloy back-mounted combination faucets with vacuum breaker and 0.75 inch (20 mm) external hose threads.

D201004 1.3 MOP SINKS

Pre-cast terrazzo floor-mounted mop sink, 36 inches x 36 inches x 12 inches (914 mm x 914 mm x 305 mm) shall be made of marble chips cast in white Portland cement to a compressive strength of not less than 3625 PSI (25 mPa) 7 days after casting. Provide brass body drains with nickel bronze strainers cast integral with terrazzo. Provide stainless steel rim guard for mop sink. Provide chrome-plated exposed hot and cold water faucets ASME A112.18.1 wall-mounted copper alloy faucets swing spout with 3/4 inch (20 mm) hose connection, vacuum breaker, and pail hook. Provide mop hanger on wall above sink suitable for four mops.

D201004 1.4 LAUNDRY SINKS

IAPMO Z124.6, plastic, two compartment, minimum dimensions of 40 inches

wide by 21 inches (1016 mm wide by 533 mm) front to rear, with floor supported steel mounting frame secured to wall. Provide ASME A112.18.1 copper alloy centerset faucets, swing spout with aerator, and stainless steel drain outlets with cup strainers, and 1.5 inch (40 mm) adjustable P-trap with drain piping to vertical vent stack.

D201005 SHOWERS/TUBS

D201005 1.1 ONE PIECE BATH AND SHOWER MODULES

IAPMO Z124.1.2, made of white fiberglass reinforced plastic (FRP) or acrylic with slip-resistant bathing surfaces, integral grab bar, and three walls integrally molded in one piece. Provide outlet at left or right as necessary to suit module arrangement. Provide pop-up drain fittings and adjustable P-trap. Bathtub and shower supply fittings shall be diverter type with body mounted from behind the wall. Provide tub fill over-rim spout with diverter.

D201005 1.2 SHOWER FLOORS

Precast terrazzo or Acrylic Shower Floors: Terrazzo shall be made of marble chips cast in white Portland cement to produce a compressive strength of not less than 3625 psi (25 MPa) 7 days after casting. Provide brass body drains with nickel bronze strainers cast integral with terrazzo.

D201005 1.3 BATHTUBS

ASME A112.19.1 white enameled cast-iron or porcelain steel bathtubs, recessed type, minimum dimensions of 56 inches (1424 mm) wide by 30 inches (762 mm) front to rear by 16 inches (406 mm) high with drain outlet for above-the-floor drain installation. Bathtub and shower supply fittings shall be diverter type with body mounted from behind the wall. Provide tub over fill rim spout with diverter.

D201005 1.4 SHOWER SUPPLY FITTINGS

ASME A112.18.1, ball joint, self-cleaning, adjustable spray pattern shower heads, connected to concealed pipe connected to copper alloy pressure balance single control type mixing valves with front access integral screwdriver stops. Anchor the mixing valves and the pipe to each showerhead in wall to prevent movement.

D201005 1.5 HANDHELD SHOWER HEAD

ASSE 1014, adjustable spray hand-held shower head with swivel fitting, 60 inch (1524 mm) minimum flexible chrome plated copper alloy hose and in-line vacuum breaker. Provide push button flow control if specified in ESR section D20. Provide 25 inch (635 mm) grab bar with sliding spray holder that locks at any height.

D201006 DRINKING FOUNTAINS AND COOLERS

D201006 1.1 DRINKING FOUNTAINS

Wall mounted drinking fountain shall be constructed of white enameled cast iron with bubbler and push button control. Handicapped fixture

mounting height and appurtenances shall be in accordance with UFAS and ADAAG.

D201006 1.2 ELECTRIC WATER COOLERS

AHRI 1010, wall-mounted, bubbler style, air-cooled condensing unit, 4.0 gph (4.20 mL per second) minimum capacity, stainless steel splash receptor, double wall heat exchanger, and all stainless steel cabinet. Provide ASME A112.6.1M concealed wall hangers with thru-bolts and back plates. Handicapped fixture mounting height and appurtenances shall be in accordance with UFAS and ADAAG.

D201090 EMERGENCY FIXTURES

Pressure-compensated tempering valve is required for emergency fixtures, with leaving water temperature setpoint adjustable throughout the range 60 to 95 degrees F (15.5 and 35 degrees C) unless cold water supply meets temperature criteria.

Where indicated in ESR section D20, provide packaged, UL listed, alarm system; including an amber strobe lamp, horn with externally adjustable loudness and horn silencing switch, mounting hardware, and waterflow switch, assembled and prewired for waterproof service within NEMA Type 3 or 4 enclosures or for explosion proof service within NEMA Type 7 or 9 enclosures.

D201090 1.1 EMERGENCY SHOWER

ISEA Z358.1, wall-mounted self-cleaning, non-clogging 10 inch (250 mm) diameter stainless steel deluge shower head with elbow, one inch (25 mm)full-flow stay-open ball valve with pull rod and 8 inch (200 mm) diameter ring or triangular handle, one inch (25 mm) interconnecting fittings.

D201090 1.2 EMERGENCY EYE & FACE WASH

ISEA Z358.1, wall-mounted self-cleaning, non-clogging eye and face wash with quick opening, full-flow valves, stainless steel eye and face wash receptor. Provide copper alloy control valves.

D201090 1.3 COMBINATION EMERGENCY SHOWER & EYEWASH

ISEA Z358.1, column mounted on a floor flange. Design combination unit so components can be operated individually from a common fixture supply line. Provide a self-cleaning, non-clogging 10 inch (250 mm) diameter stainless steel deluge shower head with elbow, full flow stay-open ball valve with pull rod and 8 inch (200 mm) diameter ring or triangular handle one inch (25 mm) interconnecting fittings. Provide a selfcleaning, non-clogging eye and face wash with quick opening, full-flow valves, stainless steel eye and face wash receptor. Provide copper alloy control valves.

D2020 DOMESTIC WATER DISTRIBUTION

D202001 PIPES & FITTINGS

D202001 1.1 COPPER

Use copper tubing and fittings for pipe sizes 4 inches (100 mm) or smaller. Use type L tubing above ground with either solder fittings, or press-on copper fittings. For buried piping, use type K tubing with either solder fittings, or press-on copper fittings.

D202002 VALVES & HYDRANTS

D202002 1.1 VALVES

Provide valves at water supplies to fixtures and to provide ease of maintenance as required in the IPC.

D202003 DOMESTIC WATER EQUIPMENT

D202003 1.1 BACKFLOW PREVENTERS

Furnish proof that each make, model/design, and size of backflow preventer being furnished for the project is approved by and has a current "Certificate of Approval" from the Foundation for Cross-Connection Control and Hydraulic Research (FCCCHR)-USC. Listing of the particular make, model/design, and size in the current FCCCHR-USC will be acceptable as the required proof. Provide freeze protection for aboveground exterior applications in areas where the winter design temperature is at or below freezing.

D202003 1.2 WATER HEATERS

D202003 1.2.1 Electric Water Heaters

Electric water heaters with double heating element per UL 174 for water heaters with less than 120 gallons of storage and 200,000 btuh input. Provide water heater per UL 1453 for commercial water heaters with 120 gallons of storage or more and 200,000 btuh input or more. Water heaters shall be equipped with glass-lined steel tanks, high efficiency type, insulated with polyurethane foam insulation, replaceable anodes, and adjustable range thermostat to allow hot water settings between 110 and 160 degrees F (43 and 71 degrees C). Water heater warranty shall be a minimum of 5 years.

D202003 1.2.2 Gas-Fired Water Heaters

High efficiency storage type water heaters per CSA/AM Z21.10.1 for water heaters with less than 120 gallons of storage and input ratings of 75,000 btuh or less. Provide water heater per CSA/AM Z21.10.3 for commercial water heaters with 120 gallons of storage or more and input ratings above 75,000 btuh. Water heaters shall meet AGA requirements. Water heaters shall be equipped with glass-lined steel tanks, polyurethane foam insulation, replaceable anodes, and adjustable range thermostat to allow hot water settings between 110 and 160 degrees F (43 and 71 degrees C). Water heater warranty shall be a minimum of 5years. Provide vent in accordance with NFPA 54.

D202003 1.3 PUMPS

D202003 1.3.1 Inline Pumps

In-line circulator for service water distribution system. Factory assembled and tested pumps constructed of materials suitable for hot domestic water service.

D202003 1.4 EXPANSION TANKS

Steel expansion tank with potable water rated polypropylene or butyl lined diaphragm at water heater.

D202003 1.6 WATER METERS

AWWA C701 turbine type, with register reading in liters and U.S. gallons.

D202004 INSULATION & IDENTIFICATION

D202004 1.1 PIPING INSULATION

Mineral fiber insulation on domestic hot water supply and recirculation piping. Insulate domestic cold water piping with cellular glass insulation (ASTM C 552, Type II, and Type III) or polyisocyanurate insulation (ASTM C 591, type I).

D202004 1.2 PIPING & EQUIPMENT IDENTIFICATION

In addition to the requirements in Section Z10, *General Performance Technical Specification*, provide laminated plastic nameplates for valves. Stop valves in supplies to fixtures will not require nameplates. Identify above ground pipe with the type of service and direction of flow. Letter size, lengths and colors shall be per ANSI A13.1.

D202005 SPECIALTIES

D202005 1.1 WASHING MACHINE CONNECTOR BOX

Recessed wall box fabricated of PVC plastic. Provide bronze dual washing machine valve with single lever shut-off.

D202005 1.4 ICEMAKER CONNECTOR BOX

Recessed wall box fabricated of PVC plastic. Provide bronze shut-off valve.

D202090 OTHER DOMESTIC WATER SUPPLY

D202090 1.1 SUPPORTS

Provide piping supports in accordance with the IPC.

D202090 1.2 INSPECTIONS

Prior to initial operation, inspect piping system for compliance with

drawings, specifications, and manufacturer's submittals.

D202090 1.3 DISINFECTION

Upon completion of the installation, disinfect all systems per the IPC.

D202090 1.4 PLUMBING SYSTEMS TESTING

Upon completion of the installation test all systems per the IPC.

D2030 SANITARY WASTE

D203001 WASTE PIPE & FITTINGS

D203001 1.1 PIPING AND FITTINGS

Cast iron hub and spigot pipe and fittings, rubber compression gasket joints or cast-iron hubless pipe and fittings, CISPI 301 with CISPI 310 couplings. Where indicated in ESR Section D20, plastic PVC or ABS piping, fittings, and solvent cement per ASTM D 2665 or ASTM D 2661 may be provided. Plastic piping shall be equipped with approved firestopping devices as required by code.

D203001 1.2 CLEANOUTS

Provide cleanouts as required by the IPC. Material shall be consistent with the piping system materials.

D203002 VENT PIPE & FITTINGS

Cast-iron hubless pipe and fittings, CISPI 301 with CISPI 310 couplings. Where indicated in ESR Section D20, plastic PVC or ABS piping, fittings, and solvent cement per ASTM D 2665 or ASTM D 2661. PVC piping shall be equipped with approved firestopping devices as required by code. Single drainage/vent stack systems (such as Philadelphia system) and mechanical air admittance valves are not acceptable.

D2040 RAIN WATER DRAINAGE

D204001 PIPE & FITTINGS

Cast iron hubless pipe and fittings, CISPI 301 with CISPI 310 couplings. Where indicated in ESR Section D20, plastic PVC or ABS piping, fittings, and solvent cement per ASTM D 2665 or ASTM D 2661 may be used. PVC piping shall be equipped with approved firestopping devices as required by code. Size and install piping in accordance with the IPC.

D204004 INSULATION & IDENTIFICATION

Mineral fiber insulation on all drainage piping that may be subject to condensation. Provide a vapor retarder.

D2090 OTHER PLUMBING SYSTEMS

D209001 SPECIAL PIPING SYSTEMS

D209001 1.1 NATURAL GAS PIPING

Conform to requirements of the local natural gas utility and ASME B31.8, *Gas Transmission and Distribution Piping Systems*, for exterior piping. Conform to requirements of NFPA 54, *National Fuel Gas Code*, for interior gas piping. Provide meter and pressure regulator in accordance with the requirements of the local utility. Provide earthquake valve where required by code.

D209005 COMPRESSED AIR SYSTEM (NON-BREATHING)

D209005 1.1 AIR COMPRESSOR

Factory packaged electric motor driven, duplex air compressor including manufacturer’s standard air filter, oil filter, and plug drain. Air compressor, aftercooler, and receiver shall be factory packaged as a unit. Receiver tank shall be per ASME PBVC Sec. VIII D1, labeled and rated for 125 PSI (862 kPa) gage, equipped with required valves and trimmings, including gage and automatic drain valve and ASME BPVC pressure safety relief valve. Air compressor and receiver shall be sized in accordance with the Compressed Air and Gas Institute (CAGI) guidelines. Locate air compressor away from noise sensitive areas.

D209005 1.2 REFRIGERATED AIR DRYER

Low-pressure compressed air dryer of the mechanical refrigeration type, equipped with an automatic temperature shutdown switch to prevent freezing, a regenerative air-to-air exchanger (as standard with the manufacturer), and a main compressed air cooling exchanger. Refrigeration system shall use non-CFC refrigerant and shall cool compressed air to dry the air. Dryer operating pressure shall be not less than 125 PSI (862 kPa) gage. Dryer size shall be based on system pressure, the entire system air flow, and provide air with a dew point 5 degrees F (-15 degrees C) lower than the most stringent equipment or outlet requirement. The pressure drop of the dryer shall not exceed 2 PSI (13.8 kPa) gage.

D209005 1.3 COMPRESSED AIR PIPING SYSTEM

Piping shall conform to the requirements of ASME B31.1 for materials, assembly, and testing. Piping shall be steel, black seamless schedule 40 carbon steel per ASTM A 53/A 53M with threaded fittings or copper tubing per ASTM B 88, Type K or Type L, hard drawn, Class 1, with wrought copper or bronze fittings. Provide compressed air drops in locations to facilitate work required with quick disconnects throughout the work areas to allow connection of such as pneumatic tools and air guns. Each air drop shall be equipped with a filter/moisture separator, pressure gauge, air pressure regulator, and a quick-disconnect.

-- End of Section --

SECTION D30

HVAC
05/14

D30 GENERAL

RFP Part 3 including the Engineering System Requirements (ESR) provide project specific requirements. The RFP Part 4, Performance Technical Sections (PTS) provide generalized technical requirements that apply to multiple facility types and include more requirements than are applicable to any one project. Therefore, only the RFP Part 4 requirements that apply to the project and further define the RFP Part 3 project specific requirements are required.

D30 1.1 NARRATIVE

This section includes the construction of interior mechanical systems. This section covers installations inside the facility and out to the five foot line. See Section G30, *Site Civil/Mechanical Utilities*, for continuation of systems beyond the five-foot line.

D30 1.2 MECHANICAL DESIGN GUIDANCE

Provide the design and installation in accordance with the following references. This Performance Technical Specification (PTS) adds clarification to the fundamental requirements contained in the following Government Standards. The general requirements of this PTS section are located in PTS Section Z10, *General Performance Technical Specification*.

D30 1.2.1 Government Standards

Federal Energy Management Program (FEMP)

UNIFIED FACILITIES CRITERIA (UFC)

UFC 1-200-01	General Building Requirements(A reference in this PTS section to UFC 1-200-01 requires compliance with the Tri-Service Core UFCs that are listed in UFGS Section 01 33 10.05 20, which includes the following significant UFC(s):UFC 3-401-01, Mechanical Engineering, 3-410-01, Heating, Ventilating, and Air Conditioning Systems, UFC 3-420-01, Plumbing Systems)
UFC 1-200-02	High Performance and Sustainable Buildings
UFC 3-440-04N	Solar Heating of Buildings and Domestic Hot Water

UNIFIED FACILITIES GUIDE SPECIFICATIONS (UFGS)

UFGS 01 78 24.00 20	Electronic Facility Operation and Maintenance Support Information
UFGS 23 05 93	Testing, Adjusting, and Balancing for HVAC
UFGS 23 09 23.13 20	BACNET Direct Digital Control Systems for HVAC
UFGS 23 81 23.00 20	Computer Room Air Conditioning Units

D30 1.3 PERFORMANCE VERIFICATION AND ACCEPTANCE TESTING

a. Verification of satisfactory HVAC system performance shall be via Performance Verification Testing, as detailed in this section.
b. The Government reserves the right to witness all Acceptance Tests and Inspections, review data, and request other such additional inspections and repeat tests as necessary to ensure that the system and provided services conform to the stated requirements.
c. The Qualified Testing Organization shall provide the Acceptance Tests and Inspections test plan and perform the acceptance tests and inspections. Test methods, procedures, and test values shall be performed and evaluated in accordance with appropriate standards, and the manufacturer's recommendations. Equipment shall be placed in service only after completion of required tests and evaluation of the test results have been completed. Contractor shall supply to the testing organization complete sets of shop drawings, settings of adjustable devices, and other information necessary for an accurate test and inspection of the system prior to the performance of any final testing. Perform acceptance tests and inspections on Computer Room Air Conditioning Units, Direct Digital Control System, and HVAC Testing/Adjusting/Balancing.

D30 1.4 HVAC COMMISSIONING

Commission the HVAC systems per the Commissioning Plan as required by UFGS Specification Section 01 45 00.05 20, *Design & Construction Quality Control*. HVAC system commissioning shall coordinate with and incorporate the testing, reporting, training & O&M documentation requirements of UFGS 23 05 93, *Testing, Adjusting, and Balancing for HVAC* and UFGS 23 09 23.13 20, *BACnet Direct Digital Control Systems for HVAC*.

D30 1.5 DESIGN SUBMITTALS

Design Submittals shall be in accordance with Z10, *General Performance Technical Specifications*, UFGS section 01 33 10.05 20, *Design Submittal Procedures*, FC 1-300-09N, *Navy and Marine Corps Design Procedures*, and UFC 3-401-01, *Mechanical Engineering* and UFC 3-410-01, *Heating,*

Ventilating, and Air Conditioning Systems.

In addition, UFGS sections listed below or in the body of the PTS text are to be used by the Designer of Record (DOR) as a part of the design submittal. If the UFGS products or systems are applicable to the project, the DOR shall edit these referenced UFGS sections and submit them as a part of the design submittal specification. Edit the specification sections in accordance with the limitations stated in PTS section Z10, *General Performance Technical Specifications*.

UFGS 01 78 24.00 20, *Electronic Facility Operation and Maintenance Support Information*

UFGS 23 09 23.13 20, *BACnet Direct Digital Control Systems for HVAC*

UFGS 23 05 93, *Testing, Adjusting, and Balancing for HVAC*

UFGS 48 14 13.00 20, *Solar Liquid Flat Plate Collectors*

D30 1.6 CONSTRUCTION SUBMITTALS

Submit construction submittals in accordance with PTS section Z10, *General Performance Technical Specifications*. In addition to the Z10 requirements, the Designer of Record (DOR) shall approve the following construction submittals as a minimum:

Solar hot water heating system fixtures and equipment, and OMSI information for all equipment and fixtures.

D30 1.7 MOTORS

Single-phase fractional-horsepower alternating-current motors shall be high efficiency types corresponding to the applications listed in NEMA MG 11. Select polyphase motors based on high efficiency characteristics relative to the applications as listed in NEMA MG 10. Additionally, all polyphase squirrel-cage medium induction motors with continuous ratings shall meet or exceed energy efficient ratings per Table 12-10 of NEMA MG 1. Provide controllers for 3-phase motors rated 1 hp (0.75 kW) and above with phase voltage monitors designed to protect motors from phase loss and over/under-voltage. Provide means to prevent automatic restart by a time adjustable restart relay. For packaged equipment, the manufacturer shall provide controllers including the required monitors and timed restart. Provide reduced voltage starters for all motors 25 hp and larger.

D3010 ENERGY SUPPLY

D301002 GAS SUPPLY SYSTEM

D301002 1.1 NATURAL GAS PIPING

Conform to requirements of the local natural gas utility and ASME B31.8, *Gas Transmission and Distribution Piping Systems*, for exterior

piping. Conform to requirements of NFPA 54, *National Fuel Gas Code*, for interior gas piping. Provide meter and pressure regulator in accordance with the requirements of the local utility. Provide earthquake valve where required by code. Contractor is responsible for providing the complete natural gas system to the facility, including any applications and permits.

D301002 1.2 MATERIALS AND EQUIPMENT

D301002 1.2.1 Aboveground Within Buildings

Black steel per ASTM A 53/A 53M, Schedule 40, and associated ASME fittings threaded ends for sizes 2 inches (50 mm) and smaller; otherwise, plain end beveled for butt welding.

D301002 1.3 PRESSURE TESTS

Pressure test per NFPA 54 at 1.5 times maximum working pressure, but in no case less than 50 PSI (350 kPa).

D302003 FUEL-FIRED UNIT HEATERS

D302003 1.1 GAS-FIRED UNIT HEATERS

ANSI Z83.8 and AGA label. Equip each heater with individually adjustable package discharge louver. Provide with thermostat.

D302005 EQUIPMENT THERMAL INSULATION

Insulate hot water pumps and equipment as suitable for the temperature and service in rigid block, semi-rigid board, or flexible unicellular insulation to fit as closely as possible to equipment.

D3030 COOLING GENERATING SYSTEMS

If coatings are indicated in ESR Section D30, provide with copper tube/copper fin construction or immersion applied, baked phenolic or other approved coating that passes the 3000 hour salt spray resistance test using the ASTM B117 procedure. Field applied coatings are not acceptable.

D303002 DIRECT EXPANSION SYSTEMS

If coatings are indicated in ESR Section D30, provide with copper tube/copper fin construction or immersion applied, baked phenolic or other approved coating that passes the 3000 hour salt spray resistance test using the ASTM B117 procedure. Field applied coatings are not acceptable.

D303002 1.2 CONDENSING UNITS

Air-cooled, split system air conditioner with ducted air distribution. Provide units factory assembled, designed, tested, and rated in accordance with AHRI 210/240 or AHRI 340/360. Provide manufacturer's minimum recommended clearance around condensing units. Refrigerant

piping size shall be per the manufacturer's recommendations.

D3040 DISTRIBUTION SYSTEMS

D304001 AIR DISTRIBUTION, HEATING & COOLING

D304001 1.1 DUCTWORK

Except as specified herein, provide ductwork constructed, braced, reinforced, installed, supported, and sealed per SMACNA standards.

D304001 1.1.1 Flexible Ducts

Use insulated flexible duct only for connections to air distribution devices to adapt to minor offsets. Flexible duct shall be UL 181 listed and per SMACNA 1966 duct construction standards with a minimum R value of 4. Maximum length of flexible ductwork shall be 6 feet (2 meters).

D304001 1.1.2 Flexible Connections

Provide flexible connectors between fans and ducts.

D304001 1.1.3 Volume Dampers

Provide manual volume dampers in each branch take-off from the main duct to control air quantity except for primary supply ductwork on VAV systems. Dampers shall conform to SMACNA 1966 duct construction standards and shall be seal class "A" construction.

D304001 1.1.4 Fire Dampers

Fire dampers shall be rated per UL 555. Fire dampers shall be dynamic type rated for closure against a moving airstream. Provide fire dampers that do not intrude into the air stream when in the open position.

D304001 1.1.5 Smoke Dampers

Smoke dampers shall be rated per UL 555S.

D304001 1.1.6 Sound Attenuators

Fabricated attenuators that will reduce the rated sound pressure level of the fan down to at least 65 decibels in the 250 Hz (third octave band) center frequency by using a reference sound source calibrated in decibels of sound power at 10 to 12 watts. Maximum permissible pressure drop shall not exceed 0.63 inch of water (157 Pa).

D304001 1.2 LOUVERS & HOODS

D304001 1.2.1 Louvers

Louvers shall bear AMCA ratings seal for air performance and

water penetration in accordance with AMCA 500L and AMCA 511. Louvers shall be constructed of anodized aluminum alloy or stainless steel. Provide birdscreens.

D304001 1.3 GRILLES, REGISTERS, & DIFFUSERS

Factory-finished grilles, registers, and diffusers. Exterior and exposed edges shall be rolled, or otherwise stiffened and rounded.

D304001 1.4 INSULATION

Provide external thermal insulation for all ductwork. Insulate ductwork in concealed spaces with blanket flexible mineral fiber. Insulate ductwork in Mechanical Rooms and exposed locations with rigid mineral fiber insulation.

Provide insulation with factory applied all-purpose jacket with integral vapor retarder. In exposed locations, provide a jacket with white surface suitable for painting. Flame spread/smoke developed rating for all insulation shall not exceed 25/50. Minimum insulation thickness shall be the minimum thickness required by ASHRAE 90.1. Insulate the backs of all supply air diffusers with blanket flexible mineral fiber insulation.

D304003 HOT WATER DISTRIBUTION SYSTEMS

D304003 1.1 HOT WATER PIPING

Hot water piping shall be electric resistance welded or seamless Schedule 40 black steel pipe conforming to ASTM A 53/A 53M. Piping 4 inch (100 mm) and smaller may be ASTM B 88 Type K or L copper.

D304003 1.2 STEEL PIPE FITTINGS

For piping 2 inch (50 mm) and smaller, provide ASME B16.3 malleable iron screwed fittings or ASME B16.11 socket welding (Class 3000) or threaded type (Class 2000). Provide ASME B16.9 butt-welding fittings or ASME B16.5 flanged type for piping 2-1/2 inch (63 mm) and larger.

D304003 1.3 COPPER FITTINGS

ASME B16.18 cast bronze solder joint type or ASME B16.22 wrought copper solder joint type.

D304003 1.4 ISOLATION VALVES

Provide isolation valves on supply and return lines at take-offs for service to each building(s). Valves shall be located in valve boxes.

D304003 1.5 INSULATION

Insulate hot water piping with mineral fiber insulation with factory-applied all-purpose jacket. Provide aluminum metal wrap over insulation for all exterior piping.

D304003 1.6 VALVES

Provide shut off valves, appropriately sized relief valves, and appropriately sized balancing valves as necessary to balance water flows, protect components and isolate equipment for service and repairs.

D304003 1.7 APPURTENANCES

Provide appurtenances such as air separators, expansion tanks, suction diffusers, strainers, and other required features to allow for proper operation of hot water systems.

D304003 1.8 TEST PORTS

Provide test ports in piping at inlet and outlet of all major system components including boilers, pumps, and other equipment as required.

D304007 EXHAUST SYSTEMS

D304007 1.1 FANS

Fans shall be AMCA 210 certified, with AMCA seal. Fan bearings shall have a minimum average life of 200,000 hours at design operating conditions. Provide bird screens for outdoor inlets and outlets. Provide direct-drive type fans with means for verifying operation via the building DDC system or with speed controllers

D304007 1.2 IN-LINE FANS

UL-Listed centrifugal fans.

D304007 1.3 WALL FANS

Propeller fans with fan guards. Provide centrifugal fans with backdraft dampers and wall bracket.

D304007 1.4 ROOFTOP FANS

UL-Listed centrifugal fans with roof curb.

D304008 AIR HANDLING UNITS

AMCA 210 certified fans with AMCA seal. Fan bearings shall have a minimum average life of 200,000 hours at design operating conditions. Provide bird screens for outdoor inlets and outlets.

D304090 OTHER DISTRIBUTION SYSTEMS

D304090 1.1 PUMPS

Centrifugal circulating pumps with motor, motor starter, and motor enclosure conforming to the appropriate NEMA standards. Provide suction diffusers on base-mounted pumps. Insulate pumps used for hot service and chilled water service.

D304090 1.1.1 In-Line Pumps

Pumps constructed of manufacturer's standard materials suitable for chilled, condenser, and hot water heating systems.

D304090 1.1.2 Base Mounted Pumps

Single stage end suction pumps suitable for chilled, condenser, and hot water heating systems.

D304090 1.2 VARIABLE FREQUENCY DRIVES (VFD)

Factory-assembled variable frequency drive control systems for variable speed control. All air handling unit and pump VFD's shall be from the same manufacturer. Each VFD shall include motor starter, motor disconnects and controls as required for a complete system. Units shall be UL-listed and comply with the National Electric Code.

Provide the following accessories:

Disconnect switch

Control circuit transformer, with primary and secondary fuses

Manual bypass

System hand-off-auto switch with provisions for remote start/stop of the system.

System initialized light

Run light

Failure alarm

LCD digital display with numeric keypad

Provide a control interface for remote monitoring of VFD functions and alarms from the DDC control system computer.

D304090 1.3 AIR SEPARATORS

ASME rated air separators with tangential inlet and outlet connections and automatic air vent.

D304090 1.4 SOLIDS SEPARATORS

Provide centrifugal solids separator with automatic drain in open systems.

D304090 1.5 EXPANSION TANKS

ASME rated expansion tanks with polypropylene or butyl diaphragm or compression tanks as indicated in UFC 3-401-01.

D304090 1.6 MAKE-UP WATER STATION

Station shall consist of a water pressure-reducing valve and a relief valve in the make-up water line to the chilled and hot water systems to maintain the operating pressure. Provide a 3/4 inch (20 mm) globe valve by-pass around this pressure reducing station. Provide reduced pressure backflow preventer upstream of the by-pass.

D304090 1.7 GLYCOL MAKE-UP STATION

If required, provide a glycol makeup system to maintain system proper operating mixture.

D304090 1.8 CONDENSATE DRAIN PIPING

ASTM B 88, Type M or L, hard drawn copper.

D304090 1.9 CONDENSATE DRAIN INSULATION

Insulate condensate drain piping with flexible cellular insulation.

D304090 1.10 CHEMICAL TREATMENT

If required, Provide chilled and hot water systems with automatic chemical treatment system for the control of pH, scale formation, and corrosion inhibition. Provide shot-type feeders for manual chemical feed. Feeders shall be rated for use with pressures up to 130 PSI (900 kPa) (gage). Provide condenser water systems with automatic chemical treatment systems that monitor conductivity, and pH, and provide for water metering and bleed-off. Provide chemicals in accordance with EPA and equipment manufacturer’s recommendations.

D304090 1.11 PIPING IDENTIFICATION

Provide piping identification labels or Stencil names or code letters for piping systems in clearly visible letters and symbols. Provide arrow-shaped markings to indicate direction of flow.

D304090 1.12 PIPE SLEEVES

Provide pipe sleeves at each wall and floor penetration. The sleeve shall be of a material suitable to protect the carrier pipe (two pipe sizes larger) and sealed with an appropriate flexible material. Provide fire stopping in fire rated walls in accordance with IBC.

D304090 1.13 SYSTEM FLUSHING

Thoroughly flush hydronic systems prior to system startup. Isolate coils during initial flushing until water is clear.

D304090 1.14 HEAT TAPE

UL-Listed, self-regulating, heat tape on piping subject to freezing.

D3050 TERMINAL & PACKAGE UNITS

D305002 UNIT HEATERS

See D302004 for gas fired unit heaters.

D305003 FAN COIL UNITS

UL-Listed, factory assembled and tested fan coils, AHRI 440 and AHRI certified.

D305004 FIN TUBE RADIATION

D305004 1.1 FIN TUBE RADIATORS AND CONVECTORS

Fin tube radiators and Convectors shall be provided with copper tubes and aluminum fins. Provide normally open, spring return control valves.

D3060 CONTROLS AND INSTRUMENTATION

D306001 HVAC CONTROLS

D306001 1.2 ELECTRONIC CONTROLS

If required, provide programmable thermostats with built in keypads for scheduling of day and night temperatures with two setback periods per day. Provide independent summer and winter programs. Thermostats shall have temporary and manual override of schedule and battery backup.

D3070 SYSTEMS TESTING AND BALANCING

D3070 1.1 HVAC SYSTEM

Provide HVAC systems testing and balancing that complies with the requirements specified in UFGS Specification Section 23 05 93, *Testing, Adjusting, and Balancing for HVAC*. The Designer of Record shall prepare UFGS Specification Section 23 05 93, as a part of the project specification and shall include the prepared specification section in the design submittal for the project.

-- End of Section --

SECTION D40

FIRE PROTECTION
05/14

D40 GENERAL

RFP Part 3 including the Engineering System Requirements (ESR) provide project specific requirements. The RFP Part 4, Performance Technical Sections (PTS) provide generalized technical requirements that apply to multiple facility types and include more requirements than are applicable to any one project. Therefore, only the RFP Part 4 requirements that apply to the project and further define the RFP Part 3 project specific requirements are required.

D40 1.1 DESIGN GUIDANCE

Provide the design and installation of fire protection systems in accordance with the following references. This Performance Technical Specification (PTS) adds clarification to the fundamental requirements contained in the following Government Standards. The general requirements of this PTS section are located in PTS Section Z10, *General Performance Technical Specification.*

D40 1.1.1 Government Standards

UNIFIED FACILITIES CRITERIA (UFC)

UFC 1-200-01	General Building Requirements(A reference in this PTS section to UFC 1-200-01 requires compliance with the Tri-Service Core UFCs that are listed in UFGS Section 01 33 10.05 20, which includes the following significant UFC(s):UFC 3-600-01, Fire Protection Engineering for Facilities)
UFC 1-200-02	High Performance and Sustainable Buildings
UFC 3-600-10N	Fire Protection Engineering

D40 1.2 QUALITY ASSURANCE

Materials and assemblies installed in the work shall be inspected and found to be in compliance with industry standards and these specifications prior to acceptance of the work. Items found not to be in compliance shall be removed, or corrective measures taken, to assure compliance with the referenced standard.

Qualifications, Training Plans, and Test Plans and Procedures indicated herein, shall be submitted 45 calendar days prior to the expected date

of execution. Notify the Contracting Officer 14 calendar days prior to all testing. Submit test results within 7 calendar days of completion of testing.

D40 1.2.1 Qualified Workers

D40 1.2.1.1 Fire Protection Designer of Record

Services and qualifications of the FPDOR shall be as specified in UFC 3-600-01 and UFC 3-600-10N. The FPDOR shall review and approve all fire protection engineering submittals.

D40 1.2.1.2 Fire Protection Engineering Technicians

Workers required herein to be certified by the National Institute for Certification in Engineering Technologies (NICET) as an engineering technician in the Fire Protection Engineering Technology program shall be thoroughly trained and experienced, and completely familiar with the specified requirements and the methods needed for proper performance of the work in this section. All documentation required to be submitted for record and/or approval shall include the NICET engineering technician's signature, along with the technician's current NICET certification number, certification subfield, and level.

Installation drawings, shop drawings or working plans, calculations, other required pre-construction documentation and as-built drawings shall be prepared by, or under the direct supervision of a NICET engineering technician as specified in Section 6 D40 of Part 3.

D40 1.2.1.3 Qualified System Installers

Fire Suppression System and Fire Alarm System installers shall be regularly engaged in the installation of the type and complexity of system specified in the Contract documents, and shall have served in a similar capacity for at least three systems that have performed in the manner intended for a period of not less than 6 months.

Installers of Chlorinated Poly Vinyl Chloride (CPVC) sprinkler systems shall be certified by the manufacturer and maintain a copy of their certification on hand at all times.

D40 1.2.1.4 Fire Protection QC Specialist

The Fire Protection (FP) QC Specialist shall be a U.S. Registered Fire Protection Engineer (FPE) and shall be an integral part of the Prime Contractor's Quality Control Organization. This FPE shall have no business relationships (owner, partner, operating officer, distributor, salesman, or technical representative) with any fire protection equipment device manufacturers,

suppliers or installers for any such equipment provided as part of this project. The Fire Protection Designer of Record (FPDOR) may serve as the FPQC Specialist provided the following qualifications are met.

a. Qualifications/Experience: The FPQC Specialist shall have obtained their professional registration by successfully completing the Fire Protection Engineering discipline examination. This FPE shall have a minimum of 5 years full time and exclusive experience in every aspect of facility design and construction as it relates to fire protection, which includes, but is not limited to, building code analysis, life safety code analysis, design of automatic detection and suppression systems, passive fire protection design, water supply analysis, and a multi-discipline coordination reviews, and construction surveillance.

b. Area of Responsibility: The FPQC Specialist is responsible for assuring the proper construction and installation of life safety and fire protection features across all disciplines and trades. The FPQC Specialist shall be responsible for assuring that life safety and fire protection features are provided in accordance with the design documents, approved construction submittals, and manufacturer's requirements. Examples include, but are not limited to, water distribution systems including fire pumps and fire hydrants, fire resistive assemblies such as spray-applied fire proofing of structural components and fire rated walls/partitions, fire alarm and detection systems, fire suppression and standpipe systems, and emergency and exit lighting fixtures.

c. Construction Surveillance: The FPQC Specialist shall visit the construction site as necessary to ensure life safety and fire protection systems are being constructed, applied, and installed in accordance with the approved design documents, approved construction submittals, and manufacturer's requirements. Frequency and duration of the field visits are dependent upon particular system components, system complexity, and phase of construction. At a minimum, field visits shall occur just prior to installation of suspended ceiling system to inspect the integrity of passive fire protection features and fire suppression system piping, preliminary inspections of fire alarm/detection and suppression systems, and final acceptance testing of fire alarm/detection and suppression systems. The FPQC Specialist shall prepare a written report detailing compliance of any outstanding submittal review comments, summarizing the results of all tests, detailing all discrepancies discovered, corrective action taken, all forms as required by the respective NFPA codes, and recommendations/certifications for acceptance. Forward one copy of the report with attachments to

the Naval Facilities Engineering Command Fire Protection Engineer.

D40 1.2.2 Performance Verification Testing

All systems shall have operational tests to demonstrate compliance with contract requirements and respective NFPA codes, International Building Code and as noted below. Test procedures shall be in full compliance with the respective NFPA codes, the equipment manufacturer recommendations, and UFC 3-600-10N. Provide all personnel, equipment, and materials for tests. Return trips to witness repeat acceptance tests due to failure of previous tests will be at the Contractor’s expense.

D40 1.2.2.1 Preliminary Inspections and Final Acceptance Testing

The FPQC Specialist shall personally witness all preliminary inspections of fire alarm/detection and suppression systems. Once preliminary inspections have been successfully completed, the FPQC Specialist shall submit a signed certificate to the QC Manager that systems are ready for final inspection and testing. The Naval Facilities Engineering Command Fire Protection Engineer will witness formal tests and approve all systems before they are accepted. The QC Manager shall submit the request for formal inspection at least 15 days prior to the date the inspection is to take place. The QC manager shall provide 10 days advance notice to the Contracting Officer and the activity Fire Inspection Office of scheduled final inspections.

D40 1.2.2.2 Final Life Safety/Fire Protection Certification

The FPQC Specialist shall provide certification that all life safety and fire protection systems have been installed in accordance with the contract documents, approved submittals, and manufacturer's requirements. This certification shall summarize all life safety and fire protection features, and shall bear the professional seal of the FPQC Specialist.

D40 1.2.2.3 System Manufacturers Representatives

The systems manufacturer technical representative shall be present for the final inspection and test for the following systems: fire alarm and detection, fire pump, carbon dioxide, foam generating and clean agent extinguishing.

D40 1.2.2.4 Fire Suppression Water Supply and Equipment

The fire hydrants shall be inspected prior to backfilling the trench surrounding the fire hydrants. A report, including pictures, shall be provided to the Contracting Officer.

Fire pump tests shall be conducted in the presence of the pump, controller, and engine manufacturer technical representatives. The fire pump manufacturer shall also be present for the preliminary test of the fire pump system.

D40 1.2.2.5 Kitchen Hood Fire Extinguishing Systems

The kitchen hood fire extinguishing system shall contain water for the actual performance testing. The nozzles may be bagged in order to minimize damage from water spray.

D40 1.2.2.6 Spray-Applied Fire Proofing and Fire Stopping

See Section C1030 for requirements.

D40 1.2.3 Training

The contractor shall provide training for the active systems within 6 weeks of final acceptance of the systems. The training shall be scheduled at least 2 weeks in advance.

D40 1.3 DESIGN SUBMITTALS

Design Submittals shall be in accordance with Z10, *General Performance Technical Specifications*, UFGS section 01 33 10.05 20, *Design Submittal Procedures*, FC 1-300-09N, *Navy and Marine Corps Design Procedures* and UFC 3-600-10N, *Fire Protection Engineering*.

D40 1.4 CONSTRUCTION SUBMITTALS

Submit construction submittals in accordance with PTS Section Z10, *General Performance Technical Specifications*. In addition to the Z10 requirements, the Designer of Record (DOR) shall approve the following construction submittals as a minimum:

All fire protection engineering submittals including:

a. Shop Drawings. Provide shop drawings for all systems.
b. Product Data. Provide product data for all equipment.
c. Design Data. Provide design data for all system calculations.
d. Test Reports
e. Certificates

D4010 FIRE ALARM AND DETECTION SYSTEMS

D401001 FIRE ALARM DISTRIBUTION

D401001 1.1 REMOTE ANNUNCIATORS

Remote annunciators shall have a minimum 80 character alphanumeric display with alarm acknowledge, alarm silence, and reset functions.

D401001 1.2 TRANSMITTED SIGNALS

Provide the following signals to be sent to the fire alarm receiving station:

a. Sprinkler Water Flow
b. Smoke Detector
c. Manual Pull Station
d. Supervisory (i.e., valve tamper switch, fire pump loss of power, fire pump phase reversal)
e. Duct Smoke Detector
f. Fire Pump Running
g. Sleeping Room Smoke Detector

D4020 FIRE SUPPRESSION WATER SUPPLY AND EQUIPMENT

D402001 FIRE PROTECTION WATER PIPING AND EQUIPMENT

The design point of connection to the existing water supply shall require the approval of the Contracting Officer. The FP DOR shall conduct additional flow tests after contract award prior to any design submissions. Tests shall be conducted under the supervision of the Contracting Officer.

D4040 SPRINKLERS

D404001 SPRINKLERS & RELEASING DEVICES

D404001 1.1 DESCRIPTION

Areas subject to freezing shall be provided with a dry pipe system. Loading docks may be protected with dry-type sidewall sprinklers supplied by the wet-pipe system.

D404001 1.2 REQUIREMENTS

Utilize upright sprinklers with ordinary temperature rating and color to match finish in normally occupied rooms without a finished ceiling (i.e., laboratories, and other spaces with exposed ceilings).

D4090 OTHER FIRE PROTECTION SYSTEMS

D409001 CARBON DIOXIDE SYSTEMS

N/A

D409002 FOAM GENERATING EQUIPMENT

N/A

D409002 1.6 AUTOMATIC WATER CONTROL VALVE ASSEMBLY (DELUGE VALVE)

N/A

D409002 1.7 FOAM SYSTEM RELEASING CONTROL SYSTEM

N/A

D409003 CLEAN AGENT SYSTEMS

N/A

D409004 HOOD & DUCT FIRE PROTECTION

N/A

-- End Of Section --

SECTION D50

ELECTRICAL
05/14

D50 GENERAL

RFP Part 3, including the Engineering System Requirements (ESR) provides project specific requirements. The RFP Part 4, Performance Technical Specifications (PTS), provides generalized technical requirements that apply to multiple facility types and include more requirements than are applicable to any one project. Therefore, only the RFP Part 4 requirements that apply to the project and further define the RFP Part 3 project specific requirements are required.

D50 1.1 NARRATIVE

This section covers installations inside the facility and out to the five foot line. See PTS Section G40, *Site Electrical*, for continuation of systems beyond the five foot line.

D50 1.2 ELECTRICAL DESIGN GUIDANCE

Provide the design and installation in accordance with the following references. This Performance Technical Specification (PTS) adds clarification to the fundamental requirements contained in the following Government Standards. The general requirements of this PTS section are located in PTS Section Z10, *General Performance Technical Specification*.

When all product Quality Control information is included in the Unified Facility Criteria (UFC) and there are requirement options identified in the ESR, then the Uniformat Level 4 titles (and possible subtitles) are included without additional verbiage. One example of this is D501090, OTHER SERVICE AND DISTRIBUTION.

D50 1.2.1 Government Publications

UNIFIED FACILITIES CRITERIA (UFC)

UFC 1-200-01	General Building Requirements(A reference in this PTS section to UFC 1-200-01 requires compliance with the Tri-Service Core UFCs that are listed in UFGS Section 01 33 10.05 20, which includes the following significant UFC(s):UFC 3-501-01, Electrical Engineering)
UFC 1-200-02	High Performance and Sustainable Buildings
UFC 3-580-10	Navy and Marine Corps Intranet (NMCI) Standard Construction Practices

UNIFIED FACILITIES GUIDE SPECIFICATIONS (UFGS)

UFGS 26 08 00	Apparatus Inspection and Testing
UFGS 26 20 00	Interior Distribution System
UFGS 26 23 00	Switchboards and Switchgear
UFGS 26 29 23	Variable Frequency Drive Systems Under 600 Volts
UFGS 26 32 13.00 20	Single Operation Generator Sets
UFGS 26 32 26	Motor Generator Sets, 400 Hertz
UFGS 26 33 53.00 20	Uninterruptible Power Supply (UPS)
UFGS 26 35 43	400 Hertz Solid State Frequency Converters
UFGS 26 36 23.00 20	Automatic Transfer Switches
UFGS 26 41 00.00 20	Lightning Protection System
UFGS 26 51 00	Interior Lighting
UFGS 27 10 00	Building Telecommunications Cabling Systems
UFGS 28 20 00.00 20	Electronic Security System (ESS), Commercial

D50 1.3 QUALITY ASSURANCE

Qualifications, certifications, and Test Plans indicated herein shall be submitted 45 calendar days prior to the expected date of execution. Notify the Contracting Officer 14 calendar days prior to all testing. Submit test results within 7 calendar days of completion of testing.

The Designer of Record is responsible for approving the submittals listed below.

D50 1.3.1 Qualified Testing Organization

Contractor shall engage the services of a qualified testing organization to provide inspection, testing, calibration, and adjustment of the electrical distribution system and equipment listed in paragraph entitled "Acceptance Tests and Inspections" herein. Organization shall be independent of the supplier, manufacturer, and installer of the equipment. The organization shall be a first tier subcontractor.

Submit name and qualifications of organization. Organization shall have been regularly engaged in the testing of electrical materials, devices, installations, and systems for a minimum of 5 years. The organization shall have a calibration program, and test instruments used shall be calibrated in accordance with NETA ATS.

Submit name and qualifications of the lead engineering technician performing the required testing services. Include a list of three comparable jobs performed by the technician with specific names and telephone numbers for reference. Testing, inspection, calibration, and adjustments shall be performed by an engineering technician, certified by NETA or the National Institute for Certification in Engineering Technologies (NICET) with a minimum of 5 years' experience inspecting, testing, and calibrating electrical distribution and generation equipment, systems, and devices.

D50 1.3.2 NEC Qualified Worker

Provide in accordance with NFPA 70. Qualified Workers shall be allowed to be assisted by helpers on a 1 to 1 ratio, provided such helpers are registered in recognized apprenticeship programs. Submit a certification confirming NEC Qualified Worker requirements.

D50 1.3.3 Qualified PV Installer

Installation of photovoltaic systems shall be by experienced and trained installers. At minimum the PV installation supervisor shall hold a "PV Installer Certification" as issued by the North American Board of Certified Energy Practitioners (NABCEP) and hold a Certified Solar Roofing Professional (CSRP) credential issued by RISE "Roof Integrated Solar Energy Inc".

D50 1.3.4 Qualified Telecommunications Worker

All installers assigned to the installation of telecommunications systems or any of its components shall be Building Industry Consulting Services International (BICSI) Registered Cabling Installation Technicians or have a minimum of 3 years experience in the installation of the specified copper and fiber optic cable and components. Include names and locations of two projects successfully completed using optical fiber and copper communications cabling systems. Include written certification from users that systems have performed satisfactorily for not less than 18 months. Include specific experience in installing and testing structured telecommunications distribution systems using optical fiber and Category 5e cabling systems.

D50 1.3.5 Material Standards

Ensure service support and provide manufacturer's nameplate in accordance with PTS Section Z10, *General Performance Technical Specification*.

D50 1.3.5.1 Warning Labels

Provide arc flash warning labels.

D50 1.3.5.2 Field-Required Nameplates

Provide laminated plastic nameplates for each switchboard, switchgear, panelboard, equipment enclosure, motor controller, relay, and switch. Each nameplate must identify the function and, when applicable, the position. Provide melamine plastic nameplates, 0.125 inch (3 mm) thick, white with black center core. Surface shall be matte finish. Corners shall be square. Accurately align lettering and engrave into the core. Minimum size of nameplates shall be 1-inch by 2-1/2 inches (25 mm by 65 mm). Lettering shall be a minimum of 0.25 inch (6.35 mm) high normal block style.

D50 1.3.6 Factory Testing

The Government reserves the right to witness all factory testing. The manufacturer shall have a calibration program that assures that all applicable test instruments are maintained within rated accuracy.

D50 1.3.7 Electrical System Startup and Testing

Submit test plans for approval. The test plans shall be tailored to the systems provided.

The test plan shall list make and model and provide functional description of the test instruments and accessories and shall describe the setup of the tests to be conducted. Test instruments shall be capable of measuring and recording or displaying test data at a higher resolution and greater accuracy than specified for the equipment's performance.

D50 1.3.7.1 Factory Trained Engineer

Provide a factory trained engineer to supervise start-up and testing as required in referenced specifications.

D50 1.3.7.2 Performance Verification Testing

The Contractor shall show by demonstration in service that all circuits and devices are in operating condition. Tests shall be such that each item of control equipment will function not less than five times. The Contractor shall provide all necessary test equipment, tools, fuel, load banks, labor, and materials for testing. As a minimum, all systems shall be tested in accordance with manufacturer's recommendations. Additional testing requirements for the various systems are described with those systems, hereinafter. The Contractor shall assure that all applicable test instruments are maintained within rated accuracy. Dated calibration labels shall be visible on all

test equipment.

Submit a separate electrical field test plan in accordance with manufacturer's recommendations and that conforms to NETA ATS for each piece of Electrical Distribution Equipment and System requiring Performance Verification Testing.

The following items identify specific test requirements. Additional test requirements are contained in the applicable UFGS.

a. Panelboards - Field test each GFI and AFI circuit breaker with a UL 1436-certified outlet circuit tester to verify correct operation.
b. Motor control centers – Test motor control centers and motor starters in accordance with NETA ATS.
c. Surge Protective Devices (SPD) -

1) Inspect for physical damage and compare nameplate data with the drawings and specifications, if applicable. Verify from the nameplate data that the SPD equipment is appropriate for the system voltage.

2) Verify lead length between the SPD equipment and the circuit connection is less than one foot.

3) Verify wiring between the SPD equipment and the circuit connection does not include high-inductance coils or sharp bends.

4) Confirm circuit breaker used for SPD circuit connection is sized in accordance with SPD manufacturer's requirements.

5) Ensure SPD equipment is grounded in accordance with SPD manufacturer's requirements. Check the ground lead on each device for individual attachment to the ground bus or electrode.

6) Check tightness of connections in accordance with NETA ATS.

7) For SPD equipment with visual indications of proper operation, verify that it displays normal operating characteristics.

d. Busway – Conduct standard tests for busway in accordance with NETA ATS.
e. Receptacles – Test GFI receptacles with a UL 1436-certified outlet circuit tester to verify correct operation.
f. Lighting - Aim photocell switches and locate light level sensors in accordance with the manufacturer's recommendations. Verify that equipment operates in accordance with user's requirements and in accordance with manufacturer’s recommendations. Fluorescent lamps on electronic dimming ballast control shall be

burned in at full light output for 100 hours before dimming.

g. Telecommunication - Test telecommunications systems in accordance with applicable EIA/TIA requirements.

h. Public address and intercommunications systems - Tests shall include originating and accepting messages at each station, at proper volume levels, without cross-talk or noise from other links or non-designated units. Test shall utilize the phonetically balanced monosyllabic work intelligibility test in accordance with ANSI S3.2 (ASA 85). In order to be acceptable, a score of at least 75 percent must be obtained for each system test.

i. Community Antenna Television Systems - Confirm design and installation is in compliance with NCTA-02, 47 CFR 76.605 and in accordance with FCC proof of performance requirements. Test plan shall define tests required to ensure that the system meets technical, operational, and performance specifications. Test plan shall include plan for testing for signal leakage.

j. Electronic security systems (ESS) – Test ESS in accordance with UFGS requirements.

k. Grounding systems - Test the grounding system in accordance with NETA ATS.

l. Lightning protection - Upon completion of the installation, Contractor shall furnish the UL Lightning Protection Inspection Certificate certified to UL 96A for the system.

m. Emergency lighting - Test emergency lighting that is intended for means of egress in accordance with NFPA 101, Section 5-9. Confirm the emergency lighting system operates for a minimum of 90 minutes and emergency illumination satisfies NFPA 101, Section 5-9, specified levels.

n. Photovoltaic Energy System - Provide test plan that meets the requirements of IEC 62446. Test plan shall include expected performance values. System performance shall be compared to expected performance and shall include at a minimum solar irradiance, DC energy, AC energy, ambient air temperature and PV cell temperature. System performance shall be measured and reported for at least one full day. If the performance monitoring of the installed array indicates the array is not meeting its required performance predictions it shall be corrected by the Contractor at the Contractor's expense. Following correction, performance monitoring will again be performed until the array meets required performance predictions. Measurements made under actual installation and temperature shall be normalized to Standard Test Conditions (STC).

1) Verify that non-current carrying metal parts are grounded.

2) Verify that all components are labeled.

3) Verify mounting supports are installed properly and all fasteners are installed correctly and torqued to manufacturer's instructions.

4) Test open circuit voltage of each string in full sunlight.

5) Submit startup and testing report.

D50 1.3.7.3 Acceptance Tests and Inspections

The Government reserves the right to witness all Acceptance Tests and Inspections, review data, and request other such additional inspections and repeat tests as necessary to ensure that the system and provided services conform to the stated requirements.

The Qualified Testing Organization shall provide the Acceptance Tests and Inspections test plan and perform the acceptance tests and inspections. Test methods, procedures, and test values shall be performed and evaluated in accordance with NETA ATS, the manufacturer's recommendations, and paragraph entitled "Field Quality Control" of each applicable specification section. Tests identified as optional in NETA ATS are not required unless otherwise specified. Equipment shall be placed in service only after completion of required tests and evaluations of the test results have been completed. Contractor shall supply to the testing organization complete sets of shop drawings, settings of adjustable devices, and other information necessary for an accurate test and inspection of the system prior to the performance of any final testing. Perform acceptance tests and inspections on Diesel-Electric Generators, Uninterruptible Power Supply (UPS) Systems, 400-Hertz Motor Generator Sets, 400-Hertz Solid State Frequency Converters, Automatic Transfer Switches, and Switchboards and Switchgear.

D50 1.4 DESIGN SUBMITTALS

Design Submittals shall be in accordance with PTS Section Z10, *General Performance Technical Specifications*, UFGS Section 01 33 10.05 20, *Design Submittal Procedures*, FC 1-300-09N, *Navy and Marine Corps Design Procedures*, and UFC 3-501-01, *Electrical Engineering*.

Submit all PV submittals to the Contracting Officer for approval.

In addition, UFGS sections listed below or in the body of the PTS text are to be used by the Designer of Record (DOR) as a part of the design submittal. If the UFGS products or systems are applicable to the project, the DOR shall edit these referenced UFGS sections and submit them as a part of the design submittal specification. Edit the specification sections in accordance with the limitations stated in PTS Section Z10, *General Performance Technical Specifications*.

UFGS 26 08 00, *Apparatus Inspection and Testing*

UFGS 26 20 00, *Interior Distribution System*

UFGS 26 23 00, *Switchboards and Switchgear*

UFGS 26 29 23, *Variable Frequency Drives System Under 600 Volts*

UFGS 26 32 13.00 20, *Single Operation Generator Sets*

UFGS 26 32 26, *Motor Generator Sets, 400 Hertz*

UFGS 26 33 53.00 20, *Uninterruptible Power Supply (UPS)*

UFGS 26 35 43, 400 *Hertz Frequency Converters*

UFGS 26 36 23.00 20, *Automatic Transfer Switches*

UFGS 26 41 00.00 20, *Lightning Protection System*

UFGS 26 51 00, *Interior Lighting*

UFGS 27 10 00, *Building Telecommunications Cabling Systems*

UFGS 28 20 00.00 20, *Electronic Security System (ESS), Commercial*

D50 1.4.1 Sustainable Design Submittal

Submit sustainable design submittals in accordance with UFGS 01 33 29.05 20, *Sustainability Requirements for Design-Build*.

D50 1.5 CONSTRUCTION SUBMITTALS

Submit construction submittals in accordance with PTS Section Z10, *General Performance Technical Specifications*. In addition to the PTS Section Z10 requirements, the Designer of Record (DOR) shall approve the following construction submittals as a minimum:

Electrical Equipment, OMSI information for equipment, and Quality Assurance Submittals listed above.

Provide certification that all adjustable protective device settings have been set in accordance with the coordination study for the as-built equipment and configuration.

D50 1.5.1 Sustainable Construction Submittal

Submit sustainable construction submittals in accordance with UFGS 01 33 29.05 20, *Sustainability Requirements for Design-Build*.

D5010 ELECTRICAL SERVICE AND DISTRIBUTION

D501001 MAIN TRANSFORMERS

Pad mounted distribution transformers shall be in accordance with PTS Section G40, *Site Electrical Utilities*.

D501002 SERVICE ENTRANCE EQUIPMENT

When a switchboard or switchgear is required, the Designer of Record shall utilize UFGS Section 26 23 00 for the project specification, and shall submit the edited specification section as a part of the design submittal for the project.

D501003 INTERIOR DISTRIBUTION TRANSFORMERS

D501004 PANELBOARDS

Panelboards shall comply with UL 67 and UL 50. UL 869A shall apply if used as service entrance equipment. Panelboards for non-linear loads shall be UL listed, including heat rise tested, in accordance with UL 67, except with the neutral assembly installed and carrying 200 percent of the phase bus current during testing.

Provide molded case circuit breakers in accordance with UL 489. Ground fault circuit interrupting circuit breakers shall comply with UL 943. Arc fault circuit breakers shall comply with UL 489 and UL 1699.

D501005 ENCLOSED CIRCUIT BREAKERS

Provide molded case circuit breakers in accordance with UL 489. UL 869A shall apply if used as service entrance equipment. Provide with solid neutral when grounded conductor is present.

D501006 MOTOR CONTROL CENTERS

Motor control centers shall comply with UL 845, NEMA ICS 2, and NEMA ICS 3. Motor controllers shall comply with UL 508. Provide disconnecting means capable of being locked out for machines and other equipment to prevent unexpected startup or release of stored energy in accordance with 29 CFR 1910.147.

D501006 1.1 VARIABLE FREQUENCY DRIVES (VFD)

When Variable Frequency Drives are required, the Designer of Record shall utilize UFGS Section 26 29 23 for the project specification, and shall submit the edited specification section as a part of the design submittal for the project.

D501090 OTHER SERVICE AND DISTRIBUTION

D501090 1.1 SURGE PROTECTIVE DEVICE (SPD)

D501090 1.2 BUSWAY

Busway shall comply with NEMA BU 1 and UL 857.

D5020 LIGHTING AND BRANCH WIRING

D502001 BRANCH WIRING

Provide wiring and connections for special outlets where required.

All homerun circuits must contain no more than 3 phase conductors.

Switches shall comply with NEMA WD-1 and UL 20.

D502002 LIGHTING EQUIPMENT

Installation shall meet requirements of manufacturer's recommendations and the additional requirements for "Severe Seismic Disturbance" contained in ASTM E 580. Fixture support wires shall conform with ASTM A 641/A 641M, galvanized regular coating, soft temper.

D502002 1.1 BALLASTS

Electronic ballasts shall include a 5-year warranty.

D5030 COMMUNICATIONS AND SECURITY

D503001 TELECOMMUNICATIONS SYSTEMS

D503002 PUBLIC ADDRESS SYSTEMS

D503003 INTERCOMMUNICATIONS SYSTEMS

D503004 TELEVISION SYSTEMS

D503004 1.1 CLOSED CIRCUIT TELEVISION (CCTV) FOR VIDEO TRAINING

D503004 1.2 COMMUNITY ANTENNA SYSTEM (CATV)

D503005 SECURITY SYSTEMS

D503005 1.1 ELECTRONIC SECTURITY SYSTEMS (ESS)

When an ESS system is required, the Designer of Record shall utilize UFGS Section 28 20 00.00 20 for the project specification and shall submit the edited specification section as a part of the design submittal for the project.

D503005 1.2 PROTECTED DISTRIBUTION SYSTEMS (PDS)

Protected Distribution Systems shall be in accordance with UFC 3-580-10 and IA PUB-5239-22, Information Assurance Protected Distribution System (PDS) Guide Book.

D503005 1.3 SENSITIVE COMPARTMENTED INFORMATION FACILITIES (SCIF)

Electrical systems installed within SCIF spaces or facilities shall comply with ICD 705, ICS 705-1, ICS 705-2, and with IC Tech Spec for ICD/ICS 705.

D503090 OTHER COMMUNICATIONS AND ALARM SYSTEMS

D5090 OTHER ELECTRICAL SERVICES

D509001 GENERAL CONSTRUCTION ITEMS (ELECTRICAL)

D509002 EMERGENCY LIGHTING AND POWER

D509002 1.1 EMERGENCY LIGHTING

D509002 1.2 EMERGENCY GENERATORS

When an emergency generator is required, the Designer of Record shall utilize UFGS Section 26 32 13.00 20 for the project specification, and shall submit the edited specification section as a part of the design submittal for the project.

D509002 1.3 AUTOMATIC TRANSFER AND BYPASS/ISOLATION SWITCHES

When an Automatic Transfer Switch is required, the Designer of Record shall utilize UFGS Section 26 36 23.00 20 for the project specification, and shall submit the edited specification section as a part of the design submittal for the project.

D509002 1.4 UNINTERRUPTIBLE POWER SUPPLY (UPS) SYSTEM

When a UPS system is required, the Designer of Record shall utilize UFGS Section 26 33 53.00 20 and shall submit the edited specification section as a part of the design submittal for the project.

D509003 GROUNDING SYSTEMS

D509004 LIGHTNING PROTECTION

When a lightning protection system is required the designer of record shall utilize UFGS section 26 41 00.00 20 and shall submit the edited specification section as a part of the design submittal for the project.

D509005 ELECTRIC HEATING

D509006 ENERGY MANAGEMENT CONTROL SYSTEM

D509090 OTHER SPECIAL SYSTEMS AND DEVICES

D509090 1.1 400 HERTZ SYSTEMS

The Designer of Record shall utilize UFGS Section 26 32 26 or UFGS Section 26 35 43 for the project specification, and shall submit the edited specification section as a part of the design submittal for the project.

--End Of Section--

SECTION F20

SELECTIVE BUILDING DEMOLITION
05/14

F20 GENERAL

RFP Part 3 including the Engineering System Requirements (ESR) provide project specific requirements. The RFP Part 4, Performance Technical Sections (PTS) provide generalized technical requirements that apply to multiple facility types and include more requirements than are applicable to any one project. Therefore, only the RFP Part 4 requirements that apply to the project and further define the RFP Part 3 project specific requirements are required.

F20 1.1 DESIGN GUIDANCE

Provide the design and installation in accordance with the following references. This Performance Technical Specification (PTS) adds clarification to the fundamental requirements contained in the following Government Standards. The general requirements of this PTS section are located in PTS Section Z10, *General Performance Technical Specification*.

Industry standards, codes, and government standards that are referenced in the section text that are not found in the Unified Master Reference List (UMRL) in the Construction Criteria Base (CCB) at the Whole Building Design Guide Website , are listed below for basic designation identification. Comply with the required and advisory portions of the current edition of the standard at the time of contract award.

F20 1.1.1 Industry Standards

Refer to UMRL for reference designation identification.

F20 1.1.2 Government Standards

UNIFIED FACILITIES CRITERIA (UFC)

UFC 1-200-01	General Building Requirements(A reference in this PTS section to UFC 1-200-01 requires compliance with the Tri-Service Core UFCs that are listed in UFGS Section 01 33 10.05 20, which includes the following significant UFC(s):UFC 3-101-01, Architecture)
UFC 1-200-02	High Performance and Sustainable Buildings
UFC 3-800-10N	Environmental Engineering for Facility Construction

UNIFIED FACILITIES GUIDE SPECIFICATIONS (UFGS)

UFGS 01 57 19.00 20	Temporary Environmental Controls
UFGS 01 57 19.01 20	Supplementary Temporary Environmental Controls
UFGS 02 82 14.00 10	Asbestos Hazard Control Activities
UFGS 02 82 16.00 20	Engineering Control of Asbestos Containing Materials
UFGS 02 83 19.00 10	Lead Based Paint Hazard Abatement, Target Housing and Child Occupied Facilities

U.S. ARMY CORPS of ENGINEERS (USACE)

EM 385 -1-1	(2008) Safety -- Safety and Health Requirements or latest edition including changes

F20 1.2 QUALITY ASSURANCE

Materials and assemblies installed in the work shall be inspected and found to be in compliance with industry standards prior to acceptance of the work. Items found not to be in compliance shall be removed, or corrective measures taken, to assure compliance with the referenced standard. Disposal of materials shall be as specified and performed in a manner to protect workers and existing structures to remain.

F20 1.3 PERFORMANCE VERIFICATION AND ACCEPTANCE CRITERIA

Compliance with the requirements will be determined by a review of the design and construction submittals and by field inspection. See UFGS Section 01 33 10.05 20, *Design Submittal Procedures*, and UFGS Section 01 33 00.05 20, *Construction Submittal Procedures*, for additional requirements.

F20 1.4 DESIGN SUBMITTALS

Design Submittals shall be in accordance with Z10, *General Performance Technical Specifications*, UFGS section 01 33 10.05 20, *Design Submittal Procedures*, FC 1-300-09N, *Navy and Marine Corps Design Procedures*, and UFC 3-800-10N, *Environmental Engineering for Facility Construction*.

F20 1.5 CONSTRUCTION SUBMITTALS

Submit construction submittals in accordance with PTS Section Z10,

General Performance Technical Specifications. In addition to the Z10 requirements and if applicable to this project, the Designer of Record (DOR) shall obtain governing body approval for the construction submittals contained in the following UFGS sections and USACE Safety Manual as a minimum:

UFGS 01 57 19.05 20, *Temporary Environmental Controls for Design-Build*

UFGS 01 57 19.01 20, *Supplementary Temporary Environmental Controls*

UFGS 02 82 14.00 10, *Asbestos Hazard Control Activities*

UFGS 02 82 14.00 20*, Engineering Control of Asbestos Containing Materials*

EM 385-1-1, *Safety and Health Requirements*, latest edition including changes

a. Engineering Safety Survey

b. Demolition Plan/ Deconstruction Plan

F2010 BUILDING ELEMENTS DEMOLITION

All demolition materials and appurtenances shall be properly disposed and in accordance with all applicable regulations. Maximize the use of deconstruction and recycling services. Before demolition can commence, any hazardous materials shall be abated in accordance with the requirements of the ESR and other parts of the RFP. Provide a Demolition Plan/ Deconstruction Plan that is based on a Registered Engineers Survey in accordance with EM 385-1-1 and has been approved by the DOR. The Contractor shall obtain approval from the Contracting Officer for the proposed demolition plan and work/outage schedule prior to demolition activities.

F2010 1.1 GENERAL DEMOLITION

The work includes demolition, salvage of identified items and materials and removal of resulting rubbish and debris. Rubbish and debris shall be removed from Government property daily, unless otherwise directed. Materials that cannot be removed daily shall be stored in areas specified in the approved Demolition Plan as described in UFGS 01 57 19.00 20.

F2010 1.2 UTILITIES

Remove existing utilities and terminate in a manner conforming to the nationally recognized code covering the specific utility. Disturbance to utilities can not cause a failure to utilities to remain operational, unless a planned outage is approved by the FEAD/ROICC and coordinated with on-site personnel.

F2010 1.3 DUST CONTROL

Perform dust control activities in accordance with approved Dirt and Dust Control Plan as described in UFGS 01 57 19.00 20.

F2010 1.4 TRAFFIC CONTROL

Where pedestrian, vehicle, aircraft safety is endangered, use traffic barricades.

F2010 1.5 WEATHER PROTECTION

For portions of the building to remain, protect building interior, materials, and equipment from weather at all times.

F2010 1.6 BURNING

Perform burning operations in accordance with the ESR.

F201001 SUBSTRUCTURE & SUPERSTRUCTURE

Perform substructure or superstructure demolition work in accordance with the ESR.

F201002 EXTERIOR CLOSURE

Perform exterior closure demolition work in accordance with the ESR.

For occupied buildings ensure openings to the exterior are secured by the end of the work shift.

F201003 ROOFING

Perform roofing demolition work in accordance with the ESR.

For removal and re-roofing projects, remove only as much roofing as can be re-covered by the end of the work shift.

F201004 INTERIOR CONSTRUCTION & FINISHES

Perform interior construction & finishes demolition in accordance with the ESR.

F201005 CONVEYING SYSTEMS

Perform conveying systems demolition in accordance with the ESR.

F201006 MECHANICAL SYSTEMS

Perform mechanical systems demolition in accordance with the ESR.

F201007 ELECTRICAL SYSTEMS

Perform electrical systems demolition in accordance with the ESR.

F201008 EQUIPMENT & FURNISHINGS

Perform special equipment and furnishing demolition in accordance with the ESR.

F201009 OTHER NON-HAZARDOUS SELECTIVE BUILDING DEMOLITION

Perform non-hazardous selective building demolition in accordance with the ESR.

F2020 HAZARDOUS COMPONENTS ABATEMENT

Prior to starting work, conduct any additional testing that may be needed to provide a final design and comply with all applicable Federal, regional, state and local regulations. Refer to UFC 3-800-10N, *Environmental Engineering for Facility Construction*, for restrictions and for additional requirements and criteria.

F2020 1.1 PRIVATE QUALIFIED PERSON (PQP)

The PQP must perform independent inspections, testing and verification of the hazardous components work as indicated in the ESR and the approved work plans as described in UFGS 01 57 19.00 20. The PQP shall be appropriately licensed in the state in which the work will be performed.

F2020 1.2 FURNISHINGS

The government shall remove all uncontaminated furnishings and equipment from the work area prior to the start of the work.

F2020 1.3 ASBESTOS

Perform asbestos related work as indicated in the RFP, in accordance with the ESR, and the approved asbestos removal work plan as described in UFGS 01 57 19.00 20.

For asbestos work in DoD schools the Designer of Record shall edit UFGS 02 82 14.00 10, *Asbestos Hazard Control Activities*, as described in UFGS 01 57 19.00 20. The Designer of Record must be an EPA accredited Asbestos Project Designer. Perform asbestos related work in DoD schools in accordance with the approved edited UFGS 02 82 14.00 10.

F2020 1.4 LEAD BASED PAINT

Perform lead based paint related work as indicated in the RFP, in accordance with the ESR and the approved lead based paint removal work plan as described in UFGS 01 57 19.00 20.

All federal, state and local regulations regarding lead based paint within a child occupied facility must be followed. For lead based paint work performed in child occupied facilities the Designer of Record shall edit UFGS 02 83 19.00 10, *Lead Based Paint Hazard Abatement, Target Housing and Child Occupied Facilities*, as described in UFGS 01 57 19.00 20. The Designer of Record must be an EPA accredited Lead Project Designer. Perform lead based paint related

work in child occupied facilities in accordance with the approved edited UFGS 02 82 14.00 10.

F2020 1.5 PAINT RELATED WORK

Perform paint related work as indicated in the RFP, in accordance with the ESR and the approved paint removal work plan as described in UFGS 01 57 19.00 20.

F2020 1.6 MERCURY & LLR COMPONENTS

Perform work as indicated in the RFP, in accordance with the ESR and the approved mercury & LLR components removal work plan as described in UFGS 01 57 19.00 20.

F2020 1.7 PCB'S

Perform PCB related work as indicated in the RFP, in accordance with the ESR and the approved PCB removal work plan as described in UFGS 01 57 19.00 20. Notify the contracting officer immediately on discovery of any equipment leaking PCB containing fluid. Take reasonable preventative measures to contain the leak and prevent movement of the PCB containing fluids.

F2020 1.8 ODS

Perform ODS related work as indicated in the RFP, in accordance with the ESR and the approved ODS removal work plan as described in UFGS 01 57 19.00 20.

F2020 1.9 ANIMAL DROPPINGS

Perform animal droppings related work as indicated in the RFP, in accordance with the ESR and the approved animal droppings removal work plan as described in UFGS 01 57 19.00 20.

F2020 1.10 MOLDS AND SPORES

Perform mold and spore related work as indicated in the RFP, in accordance with the ESR and the approved mold and spore work plan. The Designer of Record shall prepare UFGS Specification 02 85 00.00 20 MOLD REMEDIATION as part of the project specification and shall include the prepared specification section in the design submittal for the project. UFGS sections shall be edited in accordance with the limitations stated in PTS section Z10, General Performance Technical Specifications.

F2020 1.11 DISPOSAL

All waste materials shall become the property of the Contractor and shall be transported, disposed of and recycled in accordance with the approved disposal plan as described in UFGS 01 57 19.00 20.

F202001 *SUBSTRUCTURE & SUPERSTRUCTURE*

F202002 *EXTERIOR CLOSURE*

F202003 *ROOFING*

F202004 *INTERIOR CONSTRUCTION & FINISHES*

F202005 *CONVEYING SYSTEMS*

F202006 *MECHANICAL SYSTEMS*

F202007 *ELECTRICAL SYSTEMS*

F202008 *EQUIPMENT & FURNISHINGS*

F202009 *OTHER HAZARDOUS SELECTIVE BUILDING DEMOLITION*

Perform all other building components abatement work in accordance with the ESR.

-- End of Section --

SECTION G10

SITE PREPARATION
05/14

G10 GENERAL

RFP Part 3 including the Engineering System Requirements (ESR) provide project specific requirements. The RFP Part 4, Performance Technical Sections (PTS) provide generalized technical requirements that apply to multiple facility types and include more requirements than are applicable to any one project. Therefore, only the RFP Part 4 requirements that apply to the project and further define the RFP Part 3 project specific requirements are required.

G10 1.1 DESIGN GUIDANCE

Provide the design and installation in accordance with the following references. This Performance Technical Specification (PTS) adds clarification to the fundamental requirements contained in the following Government Standards. The general requirements of this PTS section are located in PTS Section Z10, *General Performance Technical Specification*.

Industry standards, codes, and Government standards referenced in the section text that are not found in the Unified Master Reference List (UMRL) in the Construction Criteria Base (CCB) at the Whole Building Design Guide Website, are listed below for basic designation identification. Comply with the required and advisory portions of the current edition of the referenced standard at the time of contract award.

G10 1.1.1 Industry Standards and Codes

AMERICAN NATIONAL STANDARDS INSTITUTE (ANSI)

Refer to UMRL for reference designation identification.

G10 1.1.2 Government Standards

CORPS OF ENGINEERS (COE)

COE EM 385-1-1	Safety and Health Requirements Manual

UNIFIED FACILITIES CRITERIA (UFC)

UFC 1-200-01	General Building Requirements(A reference in this PTS section to UFC 1-200-01 requires compliance with the Tri-Service Core UFCs that are listed in UFGS Section 01 33 10.05 20, which includes the

	following significant UFC(s):UFC 3-201-01, Civil Engineering UFC 3-220-01, Geotechnical Engineering)
UFC 1-200-02	High Performance and Sustainable Buildings
UFC 3-800-10N	Environmental Engineering for Facility Construction

UNIFIED FACILITIES GUIDE SPECIFICATIONS (UFGS)

UFGS 31 23 00.00 20	Excavation and Fill

G10 1.2 PERFORMANCE VERIFICATION AND ACCEPTABLE TESTING

Compliance with the requirements will be determined by a review of the design and construction submittals and by field inspection. See Section 01 33 10.05 20, *Design Submittal Procedures*, and Section 01 33 00.05 20, *Construction Submittal Procedures*, for additional requirements. Verify satisfactory earthwork performance via testing detailed in the paragraph, "Field Quality Control", in UFGS Specification Section 31 23 00.00 20, *Excavation and Fill*.

G10 1.3 DESIGN SUBMITTALS

Design Submittals must be in accordance with UFGS section 01 33 10.05 20, *Design Submittal Procedures*, FC 1-300-09N, *Navy and Marine Corps Design Procedures*, UFC 3-201-01, *Civil Engineering*, and UFC 3-220-01, *Geotechnical Engineering*.

In addition, UFGS sections listed below or in the body of the PTS text are to be used by the Designer of Record (DOR) as a part of the design submittal. If the UFGS products or systems are applicable to the project, the DOR is required to edit these referenced UFGS sections and submit them as a part of the design submittal specification. Edit the specification sections in accordance with the limitations stated in PTS section Z10, *General Performance Technical Specifications*.

UFGS 31 23 00.00 20, *Excavation and Fill*

Provide sustainability submittals in accordance with UFGS 01 33 29.05 20 *Sustainability Requirements for Design Build*.

G10 1.4 CONSTRUCTION SUBMITTALS

Submit construction submittals in accordance with PTS Section Z10, *General Performance Technical Specifications*. In addition to the Z10 requirements, the Designer of Record (DOR) is required to approve the following construction submittals as a minimum:

Submittals in UFGS 01 57 19.00 20, Temporary Environmental Controls.

Submittals in UFGS Specification Section 31 23 00.00 20, Excavation and Fill.

Demolition plan in accordance with Section 01 74 19.05 20, Construction and Demolition Waste Management for Design-Build.

Provide sustainability submittals in accordance with UFGS 01 33 29.05 20 *Sustainability Requirements for Design Build*.

G10 1.5 GEOTECHNICAL REPORT

G10 1.5.1 Subsurface Soils Information

Any provided subsurface soil information is included for the Contractor's information only, and is not guaranteed to fully represent all subsurface conditions. The data included in this RFP are intended for proposal preparation and preliminary design only. Perform, at the Contractor's expense, such subsurface exploration, investigation, testing, and analysis as the Designer of Record deems necessary for the design and construction of the site improvements.

G10 1.5.2 Contractor-provided Geotechnical Engineer

The Contractor-provided Geotechnical Engineer is required to be experienced with soil conditions in the region where the project site is located. The Geotechnical Engineer is required to evaluate the RFP data, obtain and evaluate all additional data as required to support the design and construction, and prepare a Geotechnical Report.

Coordinate all work, if required, by the Contractor-provided Geotechnical Engineer at the project location with the Contracting Officer so as not to interfere with normal base operations. A minimum of two weeks prior to the Foundation Work Design submittal, provide the Contractor's Geotechnical Report (an Adobe Acrobat PDF version on CD and two printed copies) for review and record keeping purposes. The report will become the property of the Government. Provide the geotechnical reports generated during construction, such as pile driving results and analysis, to the Contracting Officer. In addition, provide an Adobe Acrobat PDF version and two printed copies for record keeping purposes.

G10 1.5.3 Contractor-Provided Geotechnical Report

Submit a written Geotechnical report based upon Government-provided subsurface investigation data and all additional field and laboratory testing accomplished at the discretion of the Contractor's Geotechnical Engineer. Include the following in the Geotechnical Report:

a. The project site description, vicinity map and site map indicating the location of borings and any other sampling locations. Provide 24 hour groundwater observations for at least 20% of the borings, minimum one boring. Provide notes explaining

any abbreviations or symbols used and describing any special site preparation requirements.

b. Results of all applicable field and laboratory testing, whether Government or Contractor-provided. Address existing subsurface conditions, selection and design of the foundation and floor slab, all underground construction including utility installation and all other site specific requirements (such as soil stabilization and slope stability).

c. Engineering analysis, discussion and recommendations Addressing:

1) Settlement analysis - Limit settlement as required in UFC 3-220-01 *Geotechnical Engineering* and EM 1110-1-1904 "Settlement Analysis".

2) Bearing Capacity analysis

3) Foundation selection (shallow, deep, special) and construction considerations; dimensions, and installation procedures.

4) Site preparation (earthwork procedures and equipment, compaction requirements, building slab preparation (as applicable), soil sensitivity to weather and equipment, groundwater influence on construction, mitigation of expansive soils or liquefaction potential, and dewatering requirements).

5) Sheeting and shoring considerations, as applicable.

6) Pavement design calculations with parameters defined, actual or assumed, and recommended thicknesses and materials.

7) Stormwater management facility(ies) and permitting requirements, as applicable.

8) Haul routes and stockpile locations for earthwork, as applicable.

9) Calculations to support conclusions and recommendations.

10) Present recommendations on a structure-by-structure basis.

11) Structural and geotechnical analysis supporting the design solution.

12) Concrete Cores shall be taken from the existing basement and first floor slabs.

13) Analysis of the existing structural condition of the building foundation, basement walls and existing first floor slab.

14) SEISMIC DESIGN - A site-specific seismic ground motion study is required. Seismic Site Classification shall be determined in accordance with UFC 3-301-01, Structural

Engineering, and the 2008 USGS Ground Acceleration Maps. The Geotechnical Report shall be signed by a registered Geotechnical Engineer and Structural Engineer from Illinois.

Accompany the submitted report with a cover letter identifying any report recommendations proposed to be adopted into the design which are interpreted by the Contractor as a changed condition to the Geotechnical or Pavement related requirements of the RFP.

G10 1.5.4 Geotechnical Site Data required in Design Drawings

The Contractor's final design drawings must include the Government-provided subsurface data presented in the RFP, as well as any additional borings and laboratory test result data performed by the Contractor. The data provided is required to include:

a. Logs of Borings and related summary of laboratory test results and groundwater observations. Provide 24 hour groundwater observations for at least 20% of the borings, minimum one boring. Provide notes explaining any abbreviations or symbols used and describing any special site preparation requirements.

b. Indicate the locations of all borings on the drawings. Revise the applicable design drawings to reference the Contractor's Geotechnical Report as being a basis for design.

G1010 SITE CLEARING

G1010 1.1 GENERAL

Clear and grub project site as required for project construction.

G1010 1.2 BURNING

Where burning is permitted, adhere to the applicable federal, state, and local regulations.

G101001 CLEARING

G101001 1.1 CLEARING

Clear all trees, shrubs, brush and vegetation necessary for construction of the project. Clearing includes the felling, trimming, and cutting of trees into sections and the satisfactory disposal of the trees and other vegetation designated for removal, including downed timber, snags, brush, and rubbish occurring within the areas to be cleared.

G101001 1.2 PRESERVATION

Preserve and protect trees, shrubs and vegetation not directly impacted by the construction in accordance with Section 01 57 19.00 20, *Temporary Environmental Controls,* and PTS Section G205005, paragraph 1.1 *Existing Plant Material to Remain or be Transplanted*.

G101002 TREE REMOVAL

Remove and dispose of trees to a depth of at least 18 inches (450 mm) below ground surface. Fill depressions with satisfactory material and compact. Mound fill 2 inches (50 mm) above adjacent surface to allow for settling when not part of a subbase.

G101003 STUMP REMOVAL

Remove stumps to a depth of at least 18 inches (450 mm) below ground surface and grind stumps 18 to 30 inches (450 to 750 mm) below ground surface. Fill depressions with satisfactory material and compact. Mound fill 2 inches (50 mm) above adjacent surface to allow for settling when not part of a subbase.

G101004 GRUBBING

Within the clearing limits, remove and dispose of all logs, shrubs, brush, matted roots, roots larger than 3 inches (75 mm) in diameter, and other debris to a depth of at least 18 inches (450 mm) below ground surface. Fill depressions made by grubbing with satisfactory material and compact to make the new surface conform to the adjacent surface of the ground.

G101006 DEBRIS DISPOSAL

Prevent spillage on pavements, streets, or adjacent areas. Dispose of all surplus and unsuitable material off of Government property.

G1020 SITE DEMOLITION & RELOCATIONS

G1020 1.1 GENERAL

Demolition work includes the demolition, removal and legal disposal of existing construction debris as required to accommodate the new construction. Take necessary precautions to prevent damages to existing utilities, construction and materials not scheduled for demolition, repair or replacement; repair damages to the construction and materials to the satisfaction of the Contracting Officer and at no additional cost to the Government.

G1020 1.2 AUTHORIZATION

Do not begin demolition until the Demolition Plan has been approved by and authorization is received from the Contracting Officer.

G1020 1.3 TITLE TO MATERIALS

Whenever possible, salvage or recycle all features demolished in lieu of being disposed of as waste in a landfill. Since existing features to be demolished which are not salvageable or reused will become the property of the Contractor, remove them from the project site. The Government will not be responsible for the condition, loss of, or damage to, such property after contract award. Materials and equipment cannot be viewed by prospective purchasers or sold on the site.

G1020 1.4 REUSE OF MATERIALS AND EQUIPMENT

Remove and store materials and equipment to be reused or relocated to prevent damage, and reinstall as the work progresses.

G1020 1.5 SALVAGED MATERIALS AND EQUIPMENT

Salvage materials and equipment that are to be removed by the Contractor and that are to remain the property of the Government, and deliver to a storage site on the station in accordance with instructions of the Contracting Officer.

G102001 BUILDING MASS DEMOLITION

Refer to Section F20 for additional information.

G102002 ABOVEGROUND SITE DEMOLITION

G102002 1.1 DUST AND DEBRIS CONTROL

Prevent the spread of dust and debris to occupied portions of a building or on pavements and avoid the creation of a nuisance or hazard in the surrounding area. Do not use water for dust control if it results in hazardous or objectionable conditions such as, but not limited to, ice, flooding, or pollution. Sweep pavements as often as necessary to control the spread of debris that may result in foreign object damage potential to aircraft.

G102002 1.3 PAVING AND SLABS

Remove concrete and asphaltic concrete paving and slabs as required for construction of project. Remove the existing aggregate base in areas to receive new pavement to the depth of the proposed pavement section below new finish grade. Remove the existing aggregate base in areas not to receive new pavement to a depth of 8 inches (200 mm) below existing adjacent grade and break remaining pavement (if any) to allow drainage. Provide neat sawcuts at limits of pavement removal; protect sawcuts so that new pavement will butt against the existing without feathering.

G102002 1.4 ABOVEGROUND STORAGE TANKS

Perform aboveground storage tank removal work as indicated in the RFP, in accordance with the ESR and the approved aboveground storage tank removal work plan as described in Section 01 57 19.00 20, *Temporary Environmental Controls*.

G102003 UNDERGROUND SITE DEMOLITION

G102003 1.1 UTILITY TERMINATION

Terminate utilities in accordance with state and local rules and regulations; the nationally recognized code; and the requirements of the utility provider covering the specific utility; UFC 3-201-01, *Civil Engineering*; and approved by the Contracting Officer.

G102003 1.2 PROTECTION OF EXISTING UTILITIES

Protect existing utilities to remain. Where removal of existing utilities and pavement is required, provide approved barricades, temporary covering of exposed areas, and temporary services or connections. Repair damage to existing utilities to remain at no additional expense to the government.

G102003 1.3 UNDERGROUND STORAGE TANKS

Perform underground storage tank removal work as indicated in the RFP, in accordance with the ESR and the approved underground storage tank removal work plan as described in Section 01 57 19.00 20, *Temporary Environmental Controls*.

G102004 BUILDING RELOCATION

Refer to applicable portions of Section F20 for additional information.

G102005 UTILITY RELOCATION

Repair relocated items that are damaged or replace damaged items with new undamaged items as approved by the Contracting Officer and at no additional expense to the government.

G102006 FENCING RELOCATION

Remove and replace post foundations. Repair relocated items that are damaged or replace damaged items with new undamaged items as approved by the Contracting Officer and at no additional expense to the government. Refer to Section G204001 for requirements for new fence systems, as applicable.

G102007 SITE CLEANUP

Remove rubbish and debris from the station daily; do not allow accumulations inside or outside the building(s) or on pavements. Store materials that cannot be removed daily in areas specified by the Contracting Officer.

G1030 SITE EARTHWORK

G1030 1.1 GENERAL

This section includes the design and construction requirements for earthwork and grading related to construction of the roadways, parking, paved areas and other related sitework. Refer to Section A10 for earthwork related to construction of structures, including building, footings, foundations, retaining walls, slabs, tanks, and utility appurtenances.

The Designer of Record is required to utilize UFGS Specification Section 31 23 00.00 20, *Excavation and Fill*, for the project specification, and to submit the edited specification section as a part of the design submittal for the project.

G103001 GRADING

G103001 1.2 SITE GRADING

Preserve natural topographic features to minimize the impact on the existing drainage patterns at and adjacent to the site. Provide site grading in accordance with the requirements of the UFC 3-201-01, *Civil Engineering*.

G103001 1.3 FINISHED SURFACES

Provide finish grading with drainage towards new and existing drainage features and with no resulting low spots that hold water or that direct runoff towards new or existing facilities or site amenities. Provide finish grading in accordance with the requirements of the UFC 3-201-01, *Civil Engineering*.

G103002 COMMON EXCAVATION

Preserve natural topographic features to minimize cut and fill requirements. Since all unsuitable material and surplus excavation will become the property of the Contractor, dispose of it as indicated in the Project Program.

G103004 FILL & BORROW

G103004 1.1 SOURCES

Where sufficient topsoil and satisfactory materials are not available on the project site, provide suitable borrow materials.

G103004 1.2 UNSATISFACTORY SOIL MATERIALS

Remove unsatisfactory soil materials from the site in accordance with the Project Program and replace with satisfactory soil materials in accordance with UFGS Specification Section 31 23 00.00 20, *Excavation and Fill*.

G103004 1.3 TOPSOIL

Refer to Section G2050, "Landscaping". Remove unsatisfactory, existing topsoil from the site in accordance with the Project Program.

G103005 COMPACTION

Provide compaction in accordance with UFGS Specification Section 31 23 00.00 20, *Excavation and Fill*, and the recommendations of the Contractor's Geotechnical Engineer, whichever is greater.

G103006 SOIL STABILIZATION

Provide soil stabilization designed to function as required by site conditions in accordance with the State Highway specifications and standards in the state where the project is located. Apply and install geosynthetics in accordance with the manufacturer's written instructions.

G103007 SLOPE STABILIZATION

Provide slope stabilization methods in accordance with the State Highway specifications and standards in the state where the project is located. Design and install manufactured products, gabions, geogrids, rock anchors in accordance with the manufacturer's written instructions.

G103008 SOIL TREATMENT

G103008 1.1 TERMITE CONTROL

Refer to Section A1010 1.2, "Termite Control".

G103009 SHORING

Provide sheeting, shoring, bracing, cribbing and underpinning in accordance with the Army Corps of Engineer's Safety and Health Requirements Manual (COE EM 385-1-1), UFC 3-220-01, *Geotechnical Engineering*, UFC 3-301-01, *Structural Engineering*, and all other applicable Federal, State and local codes and requirements

Provide protection of existing structures.

G103010 TEMPORARY DEWATERING

The design of the temporary dewatering system is required to account for soil conditions, rainfall, fluctuations in the groundwater elevations and the potential settlement impact on adjacent facilities due to dewatering. Provide dewatering in accordance with UFGS Specification Section 31 23 00.00 20. While the excavation is open, maintain the water level continuously, at least 1.0 foot (0.30 m) below the working level.

French drains, sumps, ditches or trenches will not be permitted within 3 feet (0.9 m) of the foundation of any structure without written approval of the Government's Civil/Geotechnical Reviewer.

G103011 TEMPORARY EROSION & SEDIMENT CONTROL

G103011 1.1 TEMPORARY EROSION & SEDIMENT CONTROL

Develop and implement temporary erosion and sediment control measures and other Best Management Practices (BMPs) prior to or in conjunction with commencement of earthwork in accordance with the state Erosion and Sediment Control Laws and Regulations. Remove all non-permanent erosion control measures after vegetation is fully established.

G103011 1.2 MAINTENANCE

Maintain temporary erosion control measures in accordance with state Erosion and Sediment Control Laws and Regulations throughout the project until areas are fully stabilized.

G103090 OTHER SITE EARTHWORK

G103090 1.1 HISTORIC AND ARCHAEOLOGIC ARTIFACTS

Refer to Section 01 50 00.05 20, *Temporary Facilities and Controls for Design-Build*, in Part 2 of this RFP.

G103090 1.2 PIPELINE CASING UNDER RAILROADS OR PAVEMENTS

Where required by code or local practice provide casing for piping under railroads or pavements. The Contractor is responsible for obtaining permits from all government and nongovernment owners/agencies in designing and providing the work.

G103090 1.3 TOPSOIL AND SEED

Provide topsoil and seed according to UFGS Specification Section 31 23 00.00 20, *Excavation and Fill*, except when landscaping is required.

G1040 HAZARDOUS WASTE REMEDIATION

G1040 1.1 EXCAVATION

Perform excavation of contaminated soil and groundwater as indicated in the RFP, in accordance with the ESR and the approved contaminated soil and groundwater removal work plan as described in Section 01 57 19.00 20, *Temporary Environmental Controls*. Excavate areas of contamination to the depth noted elsewhere in the RFP. Select methods and equipment to minimize disturbance to areas beyond the limits of the excavation area. Remove and dispose of material that becomes contaminated as a result of the Contractor's operations at no additional cost to the Government. Where excavation extends into groundwater levels, employ dewatering methods on a localized basis to facilitate excavation operations. Collect water generated by dewatering during excavation and test in accordance with the ESR and the approved work plan.

Dispose of water that contains contaminants above the levels indicated in the ESR in accordance with the ESR and the approved work plan.

Non-contaminated water may be disposed of on-site.

G1040 1.2 STOCKPILED SOILS

Stockpile soils determined to be contaminated in accordance with the criteria in the ESR in accordance with the contaminated soil and groundwater removal work plan as described in Section 01 57 19.00 20, *Temporary Environmental Controls*, and dispose of them in accordance with the requirements of the ESR.

Soils that are determined to contain contaminants below the criteria listed in the ESR may be used as clean fill.

G1040 1.3 CLEAN FILL

Backfill and compact soils that are determined as clean fill via testing in accordance with the requirements listed in the ESR.

G1040 1.4 SPILLS

In the event of a spill or release of hazardous substances, pollutant, contaminant or oil, notify the Contracting Officer immediately. Containment actions must be taken immediately to minimize the effect of any spill or leak. Perform clean up at the Contractor's expense in accordance with the ESR and the approved spill work plan as described in Section 01 57 19.00 20, *Temporary Environmental Controls*.

G1040 1.5 DISPOSAL

Since all waste materials will become the property of the Contractor, transport and dispose of it in accordance with the criteria listed in the ESR and the approved disposal plan as described in Section 01 57 19.00 20, *Temporary Environmental Controls*.

-- End of Section --

SECTION G20

SITE IMPROVEMENTS
05/14

G20 GENERAL

RFP Part 3 including the Engineering System Requirements (ESR) provide project specific requirements. The RFP Part 4 Performance Technical Sections (PTS) provide generalized technical requirements that apply to multiple facility types and include more requirements than are applicable to this project. Therefore RFP Part 4 requirements that correspond and further define the RFP Part 3 requirements are specific to this project, other RFP Part 4 requirements are not required.

G20 1.1 DESIGN GUIDANCE

Provide the design and installation in accordance with the following references. This Performance Technical Specification (PTS) adds clarification to the fundamental requirements contained in the following Government Standards. The general requirements of this PTS section are located in PTS Section Z10, *General Performance Technical Specification*.

G20 1.1.1 Industry Standards and Codes

AMERICAN NATIONAL STANDARDS INSTITUTE (ANSI)

AMERICAN SOD PRODUCERS ASSOCIATION (ASPA)

NATIONAL FEDERATION OF STATE HIGH SCHOOL ASSOCIATIONS (NF)

U.S CONSUMER PRODUCT SAFETY COMMISSION, PUBLICATION NO. 325
Refer to UMRL for reference designation identification.

G20 1.1.2 Government Standards

U.S. GENERAL SERVICES ADMINISTRATION (GSA)

FS RR-F-191	Fencing and Wire and Post Metal (and Gates, Chain-link Fence Fabric, and Accessories)

UNIFIED FACILITIES CRITERIA (UFC)

UFC 1-200-01	General Building Requirements(A reference in this PTS section to UFC 1-200-01 requires compliance with the Tri-Service Core UFCs that are listed in UFGS Section 01 33 10.05 20, which includes the following significant UFC(s):UFC 3-201-01, Civil Engineering UFC 3-201-02, Landscape Architecture UFC 3-220-01, Geotechnical Engineering))

UFC 3-250-01FA	Pavement Design for Roads, Streets, Walks, and Open Storage Areas
UFC 3-270-01	Asphalt Maintenance and Repair
UFC 3-270-02	Asphalt Crack Repair
UFC 3-270-03	Concrete Crack and Partial Depth Spall Repair
UFC 3-270-04	Concrete Crack Repair
UFC 3-800-10N	Environmental Engineering for Facility Construction
UFC 4-022-02	Selection and Application of Vehicle Barriers

G20 1.2 QUALITY ASSURANCE

G20 1.2.1 Qualifications of Tree Location Contractor

Contractor shall be a professional tree moving company holding landscape contractor's license in the state where the work is to be performed and have a minimum ten years of tree relocation experience. Contractor must be a Certified Arborist certified by the International Society of Arboriculture. Arborist shall oversee all tree moving operations during construction.

G20 1.2.2 Qualifications of New Landscape Contractor

Construction company shall hold a landscape contractor's license in the state where the work is to be performed and have a minimum five years of landscape construction experience.

G20 1.3 PERFORMANCE VERIFICATION AND ACCEPTANCE TESTING

Compliance with the requirements will be determined by a review of the design and construction submittals and by field inspection. See Section 01 33 10.05 20, *Design Submittal Procedures*, and Section 01 33 00.05 20, *Construction Submittal Procedures*, for additional requirements.

Verification of satisfactory performance shall be via Performance Verification, as detailed in this section of the RFP. Verify satisfactory performance also via testing as detailed in the paragraph, Field Quality Control, in applicable UFGS Specification Sections utilized.

G20 1.3.1 Subgrade Preparation Performance Verification

Perform subgrade preparation in accordance with PTS Section G10. If required by the Designer of Record, perform proof rolling. Proof rolling shall be performed in the presence of the Contracting Officer. Rutting or pumping of material shall be undercut as directed by the

Contracting Officer and replaced with satisfactory soil materials as defined in Section G10, *Site Preparation*.

G20 1.3.2 Base Course Performance Verification

G20 1.3.2.1 Aggregate Base Course

a. Sampling: ASTM D 75/D 75M.
b. Gradation: ASTM C 136.
c. Thickness: Confirm in-place compacted thickness. Acceptable tolerances are plus or minus 0.5 inches (13 mm). One test for every 500 square yards (418 square meters); minimum 2 tests.
d. Density: ASTM D 1556 or ASTM D 6938. One field test for every 1000 square yards (836 square meters); minimum 2 tests. ASTM D 1557, Method A, B or C; one laboratory test for the project.
e. Visual: Surface shall be smooth with no ruts.

G20 1.3.2.2 Other Types of Base Courses

For other types of base courses, provide field testing in accordance with the SHS.

G20 1.3.3 Bituminous Concrete Pavement Performance Verification

a. Visual: Finished surface shall be uniform in texture and appearance and free of cracks and creases.
b. Sampling: ASTM D 979.
c. Job Mix: Determine gradation and bitumen content. One sample for every 400 tons (362,500 kilograms); minimum 1 test.
d. Thickness: ASTM D 3549. Confirm in-place compacted thickness. Acceptable tolerances are plus or minus 0.5 inches (13 mm) for bituminous base course and plus or minus 0.25 inches (6 mm) for bituminous surface course. One test for every 500 square yards (418 square meters); minimum 2 tests.
e. Surface Smoothness: Test surface smoothness by using a 10 foot (3 meter) straightedge in transverse and longitudinal directions to pavement. Acceptable tolerances are plus or minus 0.25 inches (6 mm) for bituminous base and surface courses.
f. Density: Conduct field density of in-place compacted pavement in accordance with ASTM D 2950 and correlated with ASTM D 1188 or ASTM D 2726. One field test for every 1000 square yards (836 square meters); minimum 2 tests. One laboratory test for the project.

G20 1.3.4 Portland Cement Concrete Pavement Performance Verification

a. Visual: Finished surface shall be uniform in texture and appearance and free of cracks.
b. Sampling: ASTM C 31M (ASTM C 31).
c. Thickness: Acceptable tolerances are plus or minus 0.5 inches (13 mm). One test for every 500 square feet (418 square meters); minimum 2 tests.
d. Surface Smoothness: Test surface smoothness by using a 10 foot

(3 meter) straightedge in transverse and longitudinal directions to pavement. The finished surfaces of the pavements shall have no abrupt change of 0.12 inch (3 mm) or more.

e. Strength: Samples for strength tests of each mix design of concrete placed each day shall be taken not less than once a day, nor less than once for each 100 cubic yards (120 cubic meters) of concrete, nor less than once for each 5000 square feet (500 square meters).

1) Compressive Strength: ASTM C 39/C 39M. Make five test cylinders for each set of tests. Test two cylinders at 7 days, two cylinders at 28 days, and hold one cylinder in reserve. Each strength test result shall be the average of two cylinders from the same concrete sample tested at 28 days. If the average of any three consecutive strength test results is less than f'c or if any strength test result falls below f'c by more than 500 psi, take a minimum of three ASTM C 42/C 42M core samples from the in-place work represented by the low test cylinder results and test. Concrete represented by core test shall be considered structurally adequate if the average of three cores is equal to at least 85 percent of f'c and if no single core is less than 75 percent of f'c. Locations represented by erratic core strengths shall be retested.

2) Flexural Strength: ASTM C 78/ C 78M. Make four test specimens for each set of tests. Test two specimens at 28 days, and the other two at 90 days. Concrete strength will be considered satisfactory when the minimum of the 90-day test results equals or exceeds the specified 90-day flexural strength, and no individual strength test is less than the design strength. If the ratio of the 28-day strength test to the specified 90-day strength is less than 65 percent, make necessary adjustments for conformance.

f. Remove concrete not meeting strength criteria and provide new acceptable concrete at no expense to the government. Repair core holes with nonshrink grout. Match color and finish of adjacent concrete.

G20 1.3.5 Concrete Joint Performance Verification

Install a test section of 500 linear feet (150 m) at start of sealing operation for each type sealant to be used. Obtain approval of test section by Contracting Officer prior to installing additional joint seal. Joint sealer that fails to cure properly, or fails to bond to joint walls, or reverts to uncured state or fails in cohesion, or shows excessive air voids, blisters, or has surface defects, swells, or other deficiencies, or is not recessed within indicated tolerances shall be rejected. Remove rejected sealer and reclean and reseal joints.

G20 1.3.6 Topsoil Performance Verification

Prior to planting design, provide a commercial soil analysis. Amend planting areas based on the soil test's interpretation, amendment type, and quantity recommendations (including soil nutrients and texture, with percentages shown). Additional topsoil shall be used

only in areas where soil analysis shows that the existing soil is inadequate for growth of plant materials.

G20 1.3.7 Final Inspection for Planting and Irrigation

Final inspection shall be made upon written request from the Contractor at least 10 days prior to the last day of the planting and irrigation Establishment Period. The Landscape Contractor shall attend the inspection with the Contracting Officer and document the inspection. The Landscape Architect-of-Record shall also attend the inspection and provide the Contracting Officer with a letter certifying that the planting and irrigation is installed per the plans and irrigation coverage is correct and appropriate for optimum plant survival. At the end of the Establishment Period, remove all stakes and guy cables.

G20 1.3.8 Landscape Establishment Period and Guarantee

Guarantee all transplanted trees, newly planted vegetation and irrigation systems for a period of one year after the Contracting Officer's final acceptance. This acceptance, and the submittal of irrigation as-builts and controller charts, begins the Establishment Period. Replace all trees, shrubs, and ground covers that die or have 20 percent or more of their crowns that die during planting operations or the guarantee period with healthy plants of the same species or variety during the appropriate planting season. The Landscape Architect-of-Record must, along with the Contracting Officer, attend, approve and document the start of the Establishment Period and document quarterly and final inspections. The Landscape Architect of Record must document quarterly and final inspections by submitting written reports with photographs to the Contracting Officer. During this period, perform tasks including, but not limited to: watering, mowing, overseeding, fertilizing, mulching, pruning, weeding, eradicating pests (rodents, rabbits, insects, mammals and fungus), restaking, adjusting guy wires, adjusting irrigation systems, maintaining erosion control materials, removing dead or broken branches by pruning in accordance with ANSI A300 Part 1, maintaining edging of planter beds, checking for girdling of trees, removal of trash and debris, and replenishing mulch to assure all plant material is in a healthy and thriving condition or replace plant material at Contractor's expense. Reseed broadcast seeded or hydro-seeded areas that do not achieve the 95-percent coverage by the end of the Establishment Period by the same method and maintain an additional 120 days to ensure coverage requirements are met. Maintain turf in a manner that promotes proper health, growth, rich natural green color, and a neat, uniform, manicured appearance, free of bare areas, ruts, holes, weeds, pests, dead vegetation, debris, and unwanted vegetation that present an unsightly appearance. Mow weekly during the growing season and remove excess clippings.

G20 1.4 DESIGN SUBMITTALS

Design Submittals shall be in accordance with UFC 1-200-01, General Building Requirements, UFGS section 01 33 10.05 20, *Design Submittal Procedures*, FC 1-300-09N, *Navy and Marine Corps Design Procedures*, and UFC 3-201-01, *Civil Engineer*ing.

In addition, UFGS sections listed below or in the body of the PTS text are to be used by the Designer of Record (DOR) as a part of the design submittal. If the UFGS products or systems are applicable to the project, the DOR shall edit these referenced UFGS sections and submit them as a part of the design submittal specification. Edit the specification sections in accordance with the limitations stated in PTS section Z10, *General Performance Technical Specifications*.

32 11 16.13, *Sand-Clay [Base] [Subbase] Course*

32 11 16.16, *[Base Course for Rigid] [and Subbase Course for Flexible] Paving*

32 11 24, *Graded Crushed Aggregate Base Course for Flexible Pavement*

32 11 26.16, *Bituminous Concrete Base Course*

32 11 33, *Cement Stabilized [Base] [Subbase] Course at Airfields and Roads*

32 11 36.13, *Lean Concrete Base Course*

32 12 17, *Hot Mix Bituminous Pavement*

32 13 13.16, *Portland Cement Concrete Pavement for Roads and Site Facilities*

32 13 43, *Pervious Concrete Paving*

32 16 15, *Concrete Block Pavements*

G20 1.5 CONSTRUCTION SUBMITTALS

Provide product data for all exterior furnishings.

Submit construction submittals in accordance with PTS Section Z10, *General Performance Technical Specifications*. In addition to the Z10 requirements, the Designer of Record (DOR) shall approve the following construction submittals as a minimum:

Provide product data for all exterior furnishings, field test reports. transporting plan, and irrigation plan.

G20 1.5.1 Transplanting Plan
G20 1.5.2 As-Builts

G20 1.6 ANTITERRORISM (AT) STANDARDS

INCORPORATE THE MINIMUM AT STANDARDS INDICATED IN UFC 4-010-01, *DOD MINIMUM ANTITERRORISM STANDARD FOR BUILDINGS*.

G20 1.7 PROJECT LIMITATIONS

Prior to the start of design, the Contractor shall determine the exact limit-of-work line for the project periphery, considering items such as, but not limited to, utility work, landscape revegetation of disturbed areas, and laydown areas. The Designer of Record shall determine limit-of-work lines.

G2010 ROADWAYS

G2010 1.1 PAVEMENT DESIGN

Provide geometric and pavement design, including minimum pavement sections, in accordance with UFC 3-201-01, *Civil Engineering*, and the State Department of Transportation. Provide pavement calculations in accordance with FC 1-300-09N, *Navy and Marine Corps Design Procedures*. Provide any required additional pavement design to provide a complete and useable facility.

For pavements subject to aircraft traffic or aircraft ground support equipment traffic consult Government Civil Reviewer for design criteria and requirements. State Department of Transportation standards are not acceptable for airfield pavements.

G2010 1.2 PAVEMENT AESTHETICS

Provide surfaces consistent in color and finish.

G2010 1.3 LANDSCAPING

G2010 1.4 TRAFFIC CONTROL DEVICES

New traffic control devices (i.e., signs and markings) shall be provided and installed in accordance with the United States Department of Transportation Federal Highway Administration's *Manual on Uniform Traffic Control Devices* and their standard, "Rigid Sign Supports". New traffic control devices shall also be provided along/in the existing streets adjacent to the project site as necessary to provide complete traffic control to the new facilities.

G2010 1.5 EXISTING UTILITY STRUCTURES

Existing utility structures shall be adjusted to meet the new finished pavement grades as required.

G201001 BASES & SUBBASES

Prepare subgrade in accordance with Section G10, *Site Preparation*. Geotextiles may be used for separation or reinforcement in accordance with manufacturer's instructions. Provide base course under paved areas in accordance with the State Highway specifications (SHS) in the state where the project is located.

Place base course in accordance with the SHS for that particular base course and in layers of equal thickness with no compacted layer more than 6 inches (150 mm) thick. Compact base course at optimum moisture content to 100 percent ASTM D 1557 maximum dry density.

Where SHS are not available or applicable, the Designer of Record shall utilize the applicable UFGS Specification Sections referenced under paragraph 1.1.2

entitled "Government Standards" for the project specification. Submit these specifications in edited form as a part of the design submittal for the project.

G201002 CURBS & GUTTERS

Provide concrete curbs and gutters in accordance with the SHS and standards or as specified in UFC 3-201-01, *Civil Engineering*, whichever is more stringent. Where the SHS do not include concrete materials for curbs and gutters, provide concrete in accordance with the applicable standard mix of the SHS for a minimum compressive strength at 28 days of 3500 psi (25 MPa) concrete.

G201003 PAVED SURFACES

Where SHS are not available or applicable, the Designer of Record shall utilize the applicable UFGS Specification Sections referenced under paragraph 1.1.2 entitled "Government Standards" for the project specification. Submit these specifications in edited form as a part of the design submittal for the project.

G201003 1.1 PAVEMENT MIX

G201003 1.1.1 Bituminous Concrete Pavement

Provide bituminous concrete pavement in accordance with the applicable standard mix of the SHS based on the pavement design and vehicle loading indicated in this RFP.

G201003 1.1.1.1 Bituminous Concrete Placement

Bituminous concrete placement, including minimum temperature during placement, joints, and maximum lift thickness shall be in accordance with the SHS. Compact bituminous concrete in accordance with the SHS, modified to 96 percent of maximum laboratory density.

G201003 1.1.2 Portland Cement Concrete Pavement

If reinforced, the welded wire fabric shall conform to ASTM A 185. Bar reinforcement shall conform to ASTM A 615/A 615M, Grade 400 (Grade 60).

Provide concrete in accordance with the applicable standard mix of the SHS for the design strength required by UFC 3-201-01, *Civil Engineering*, plus any allowable deviations. Unless noted otherwise in Part 3 or Part 6, provide a minimum compressive strength at 28 days of 3500 psi (25 MPa) concrete.

G201003 1.2 JOINTS FOR PORTLAND CEMENT CONCRETE PAVEMENT

Joints shall be in accordance with SHS and the applicable portions of UFC 3-250-01FA, *Pavement Design for Roads, Streets, Walks, and Open Storage Areas*. Joints shall be installed in a manner and at such time to prevent random or uncontrolled cracking. Joints shall form a regular rectangular pattern. Wherever curved pavement edges occur, make joints to intersect tangents to curve at right angles.

G201003 1.2.1 Expansion Joints

Provide thickened edge expansion joints at the intersection of two rigid pavements. Use preformed joint filler, ASTM D 1751. Filler must be compatible with joint sealer material. Preformed joint filler shall be securely held in position during concreting operations.

G201003 1.2.2 Isolation Joints

Provide thickened edge isolation joints by placing a 1/2-inch (12 mm) preformed joint filler (ASTM D 1751) around each structure that extends into or through the pavement before concrete is placed at that location.

G201003 1.2.3 Contraction Joints

Joint lines shall be sawed within specified tolerance, straight, and extend for width of transverse joint, and for entire length of longitudinal joint.

G201003 1.2.4 Construction Joints

If an emergency stop occurs remove the concrete back to location of transverse joint and install a construction joint.

G201003 1.2.5 Joint Sealants

ASTM D 5893/D 5893M; provide single component cold-applied silicone. Silicone sealant shall be self-leveling and non-acid curing.

G201003 1.2.6 Preformed Compression Seals

Use performed compression seals in areas where silicone joint sealant does not perform, such as areas subject to water inundation, blasts, or constant/repeated fuel spillage.

ASTM D 2628. ASTM D 2835, for lubricant.

G201003 1.3 PRIME COAT

Use prime coat in accordance with the SHS. Prime coat shall be emulsified asphalt materials.

G201003 1.4 TACK COAT

Tack coat is required for bituminous pavement overlays and on vertical cut faces of pavement patches. Tack coat shall be in accordance with the SHS.

G201003 1.5 PAVEMENT PATCHES

Provide pavement patches for existing pavements where required for installation of utility trenches. Sawcut 12 inches beyond edge of trench. Thicknesses of pavement materials shall be equal to or greater than the existing pavement section.

For spalls or repairs of existing concrete pavement, perform repairs in

conformance with UFC 3-270-03, *Concrete Crack and Partial Depth Spall Repair*, and UFC 3-270-04, *Concrete Repair*. Spall repair materials shall be either Rapid Setting Cementitious Concrete (RSCC), epoxy concrete, or polymer-modified Portland Cement (non-sag mortar) products specially formulated for spall repairs, with a proven record (in service at least three years) of satisfactory use under loading and environmental conditions similar to those at the location of intended use. A manufacturer's data sheet and certificate supporting the satisfactory use shall be provided to the Contracting Officer with the design. A product manufacturer's representative shall be present during the initial two days of product application to verify that manufacturer's instructions for use are adhered to. The Contracting Officer shall be given 7 days notice prior to the initial application in order to be present.

G201004 MARKING & SIGNAGE

G201004 1.1 MARKING

Pavement markings shall be in accordance with the SHS. Materials shall be designed for life expectancy of at least 3 years under an average daily traffic count per lane of approximately 9000 vehicles. Water based paints shall have durability rating of at least 4 when determined in the wheel path area.

Provide a half-rate initial marking application on bituminous pavements. Provide the remaining application at the end of the normal curing period.

G201004 1.2 SIGNAGE

Provide signage in accordance with the MUTCD.

G201005 GUARDRAILS & BARRIERS

G201005 1.1 GUARDRAILS

Provide guard (guide) rails in accordance with the SHS. Where the SHS do not include materials for guardrails, provide guardrails in accordance with the applicable portions of the *AASHTO Roadside Design Guide*.

G201005 1.2 BOLLARDS

For bollards to prevent damage, provide minimum 4 feet height, 4 inch diameter steel pipe filled with concrete, painted, and embedded in a portland cement concrete foundation.

For bollards located at building entries or other high-visibility areas provide decorative bollards matching the design of the facility or consistent with the Base Exterior Architecture Plan (BEAP) and the Installation Appearance Plan.

Bollards for security are specified in Section G204004, "Security Structures".

G201006 RESURFACING

Adjust rims of existing utility structures to match proposed grades after

resurfacing.

G201006 1.1 SLURRY SEAL

ASTM D 3910 and in accordance with the SHS.

G201006 1.2 BITUMINOUS CONCRETE OVERLAY

Remove old pavement by cold milling to depths required to provide new surface and leave underlying materials intact. Clean the pavement of excessive dirt, clay or other foreign matter with power brooms and hand brooms immediately prior to the milling operation.

Repair or replace damaged utility structures, valve boxes, or pavement that is torn, cracked, gouged, rutted, broken or undercut at no addition expense to the government.

Provide bituminous concrete overlay produced from hot or cold recycling of the milled material or from virgin materials in accordance with the applicable provisions of UFC 3-201-01, *Civil Engineering*, and the standard mix of the SHS based on the pavement design and vehicle loading as indicated in this RFP.

G201006 1.3 CRACK SEALING

Fiber reinforced crack sealer shall be used for sealing cracks in asphalt pavement after milling and prior to resurfacing. Crack sealing shall conform to the following requirements in UFC 3-270-01, *Asphalt Maintenance and Repair*, and UFC 3-270-02, *Asphalt Crack Repair*.

G2020 PARKING LOTS

Refer to Section G2010

G202001 BASES & SUBBASES

Refer to Section G201001.

G202002 CURBS & GUTTERS

Refer to Section G201002.

G202003 PAVED SURFACES

Refer to Section G201003.

G202004 MARKING & SIGNAGE

Refer to Section G201004. Provide water-based paints only.

Mark neatly to denote traffic lanes and parking spaces; mark in accordance with the requirements of UFC 3-201-01, *Civil Engineering*.

G202005 GUARDRAILS & BARRIERS

Refer to Section G201005.

G202005 1.1 WHEELSTOPS

Provide precast concrete wheelstops.

G202006 RESURFACING

Refer to Section G201006.

G2030 PEDESTRIAN PAVING

Locate new sidewalks such that they maintain continuity of pedestrian traffic to and from the existing sidewalks adjacent to the site(s).

G203001 BASES & SUBBASES

Provide as required by local standards or geotechnical report; refer to Section G201001.

G203003 PAVED SURFACES

G203003 1.1 SIDEWALKS

Sidewalks shall be portland cement concrete pavement, 4 inches (100 mm) thick minimum. Provide concrete in accordance with the applicable standard mix of the SHS for a minimum compressive strength at 28 days of 3500 psi (25 MPa) concrete. Sidewalks shall be at least 5 feet (1.5 meters) wide, except that sidewalks connecting entry points of housing units to the housing unit's parking shall be at least 36 inches (900 mm) wide. Use the maximum percentage of fly ash allowed in the applicable standard mix of the SHS. In housing areas, offset sidewalks paralleling streets to maintain a minimum grassed separation of 5 feet (1.5 meters) from the back face of the curb to the closest edge of the sidewalk.

Provide a broomed finish. Unless indicated otherwise, provide a transverse slope of 1/48. Limit variation in cross section to 0.25 inch in 5 feet (6 mm in 1.50 m).

G203003 1.1.1 Joints

Provide contraction joints spaced at intervals equivalent to the width of the sidewalk. Provide 0.5 inch (13 mm) thick transverse expansion joints at changes in direction where sidewalk abuts curb, steps, rigid pavement, or other similar structures; space expansion joints every 50 feet (15 m) maximum. Provide isolation joints by placing a 1/2-inch (12 mm) preformed expansion joint filler around each structure that extends into or through the sidewalk before concrete is placed at that location.

G203003 1.2 CONCRETE PAVERS

G203003 1.3 HANDICAPPED RAMPS

Provide handicapped ramps of PCC pavement with an exposed aggregate finish, truncated domes, or as required by the SHS at roadway intersections.

G203004 GUARDRAILS & BARRIERS

Refer to Section G201005.

G2040 SITE DEVELOPMENT

G204001 FENCING & GATES

G204001 1.1 CHAIN LINK FENCE

Aluminum fabric, posts or accessories shall not be used.

Chain link fence fabric shall be at least 9 gauge (3 mm) steel wire mesh material (before any coating) with mesh openings not larger than 2 inches (51 mm). Install fence in accordance with ASTM F 567 and the manufacturer's written installation instructions.

G204001 1.1.1 Tensions Wires and Top Rails

Provide rails in accordance with FS RR-F-191/3, Class 1, steel pipe, Grade A.

G204001 1.1.2 Gates

Provide gates in accordance with FS RR-F-191/2 with posts and fabric as specified for fence.

G204001 1.1.3 Posts and Braces

Provide posts and braces in accordance with FS RR-F-191/3, Class 1, steel pipe, Grade A. Each gate, terminal and end post will be braced with truss rods.

G204001 1.1.4 Fencing Accessories

Provide fencing accessories in accordance with FS RR-F-191/4. If PVC coating is required, provide accessories with PVC color coating similar to that specified for chain-link fabric or framework.

G204001 1.2 ORNAMENTAL FENCE

G204001 1.3 SECURITY FENCE

Provide security fencing systems in accordance with UFC 3-201-01, *Civil Engineering*, and this RFP.

G204001 1.3.1 Chain Link Security Fence

Provide chain link fence in accordance with paragraph G204001 – 1.1, excepted as noted otherwise. Ensure that the fabric has twisted and barbed selvage at the top and bottom. Do not provide top rails. All posts and structural supports shall be located on the inner side of the fencing. Outriggers shall be installed facing outward except when the fence must be mounted directly on the property line.

G204001 1.3.2 Signage

Provide signage at a minimum of 200 foot (61 m) intervals along the entire perimeter.

G204001 1.3.3 Drainage Culverts and Utility Openings

Provide protective measures to prevent access through culverts, storm drains, sewers, air intakes, exhaust tunnels and utility openings or across drainage ditches or swales.

G204001 1.4 OPENINGS IN PERIMETER AND SECURITY FENCING

Openings in perimeter fencing and security fencing shall not be covered, blocked or laced with material which would prevent a clear view of personnel, vehicles or material in the outer or inner vicinity of the fenceline.

G204001 1.5 FENCE GROUNDING

Ground fencing on either side of every gate and at other locations when the fencing is near and parallel to high tension power lines. Grounding shall also be at intervals of 1000 feet (305 meters) to 1500 feet (457 meters) when the fencing runs through isolated areas and at lesser distances depending on the proximity of the fencing to public roads, highways and buildings where the fencing is around or within any explosive storage, production, operating or handling areas.

G204002 RETAINING WALLS AND FREESTANDING WALLS

Provide retaining walls to permanently resist soil pressures as well as live loads. Provide wall drainage to minimize lateral loading and protect wall materials against degradation.

G204005 SIGNAGE

Provide facility signage as required by local code, the Installation and Appearance Guide, the Base Exterior Architectural Plan (BEAP) and this RFP.

Size messages and graphics on signs according to the functional viewing distance. Typically, at least 1 inch (25 mm) of letter height per 25 feet (7.62 meters) of viewing distance is required for readability.

Refer to Section G201004, "Marking & Signage" for traffic signage.

G204090 OTHER SITE IMPROVEMENTS

Other site improvements shall conform to the BEAP or Installation Appearance Plan (whichever is applicable) and to the requirements of UFC 4-010-01.

G204090 1.1 DUMPSTER PADS AND ENCLOSURES

G2050 LANDSCAPING

G205001 FINE GRADING AND SOIL PREPARATION

See Section G10, Site Preparation.

G205002 EROSION CONTROL MEASURES

See Section G10, Site Preparation.

G205003 TOP SOIL AND PLANTING BEDS

See paragraph titled, G205005 PLANTINGS.

G205004 SEEDING, SPRIGGING, AND SODDING

Areas that are to be seeded that are larger than 1,000 square feet (92.90 square meters) shall be hydroseeded. Hydroseed mix composition shall be appropriate for surrounding land use and compatible and consistent with local application rates, seed availability and established practice in the project area. If project dates are unknown, specify required planting dates or alternative species for different seasons. Apply seed at a time best suited for germination of the selected species. Seeded areas shall achieve a 95-percent coverage of the selected species and be weed free at the end of the Establishment Period.

G205005 PLANTINGS

G205005 1.1 EXISTING PLANT MATERIAL TO REMAIN OR BE TRANSPLANTED

Preserve existing trees to the greatest extent possible. The Contractor shall tag trees to be saved with plastic or vinyl tape tied to the tree caliper. The Contractor shall protect existing trees by fencing planting areas to remain from compaction and any other damage with a barrier of metal poles a maximum 8 feet (2.4 meter) on center with plastic netting to a minimum of 10 feet (3.0 meter) radius from outside of the tree’s trunk. Where tree drip lines are greater than 10 feet (3.0 meter) from the tree's trunk, locate barrier fencing at the drip line of the tree. The Contractor shall not allow debris from tree or stump removal operations to fall on or otherwise damage plants that are not scheduled for removal. Plastic tape and barrier fencing shall not be removed until planting operations are ready to begin and or instructed by the Contracting Officer. Existing trees to remain or to be transplanted that are unhealthy, that die, or have 20 percent or more of their crowns that die during the establishment period shall be replaced with healthy plants of the same species or variety during the appropriate planting season. During the landscape establishment period, trees, turf, shrubs, and ground cover that are damaged or destroyed during construction operations shall be replaced by the Contractor at no additional cost to the Government. The Contractor, at the direction of the Contracting Officer, shall remove the existing tree and stump and replace it with trees of the same genus and species equal to the total caliper of the existing tree. Minimum caliper of replacement trees shall be 4 inch (100 mm). Replace shrubs with 5 gallon (18.9 liter) size container, ground cover with flat containers planted at 8 inches (200 mm) on center, and turf with sod, all of the same genus and species.

G205005 1.2 UTILITIES

G205005 1.3 RECYCLING

Green waste: Contact the Public Works Department for potential green waste collection and hauling by the Government. Green waste not collected by the Government shall be separated from construction debris and delivered to the

base's or local landfill's green waste recycling area. Quantify and report diverted waste to the Contracting Officer.

G205005 1.4 PLANTING

G205005 1.4.2 Plant Quality

All seed, sod, and sprigs shall be State Certified.

G205005 1.4.3 Plant Selection

The reviewing Government Landscape Architect shall have final approval authority on all selected plant material. Species deemed unsuitable for planting by the Government Landscape Architect will not be allowed.

G205005 1.4.4 Plant Installation

Planting operations, including but not limited to planting soil mixes and fertilization, shall comply with local established practices and agricultural extension service recommendations.

G205005 1.4.6 Fertilizer

Fertilize all turf and ornamental grasses as recommended by local agricultural extension services.

G205005 1.4.7 Weed Fabric and Erosion Control Fabric

Provide a weed barrier fabric of sheet polypropylene or polyester fabric specifically designed for weed control purposes beneath all planted or mulched non-planted areas. Fabric shall be treated for protection against deterioration due to ultraviolet radiation. Fabric shall be a minimum 99 percent opaque to prevent photosynthesis and seed germination from occurring, yet allowing air, water and nutrients to pass through to the roots. Minimum weight shall be 5 ounces per square yard (0.11 kg per square meter) with a minimum thickness of 20 mils (0.50 mm) with a 20 year minimum guarantee. Provide a biodegradable product designed specifically for erosion control on all sloped areas 3:1 and greater in slope.

G205005 1.4.8 Drainage

Provide for proper grading and drainage of turf and planting areas. Provide sub-surface drainage where soil or other conditions do not allow surface drainage. Do not drain roof gutters into planter areas.

-- End of Section --

SECTION G30

SITE CIVIL/MECHANICAL UTILITIES
05/14

G30 GENERAL

RFP Part 3 including the Engineering System Requirements (ESR) provide project specific requirements. The RFP Part 4 Performance Technical Sections (PTS) provide generalized technical requirements that apply to multiple facility types and include more requirements than are applicable to this project. Therefore RFP Part 4 requirements that correspond and further define the RFP Part 3 requirements are specific to this project, other RFP Part 4 requirements are not required.

G30 1.1 DESIGN GUIDANCE

Provide the design and installation in accordance with the following references. This Performance Technical Specification (PTS) adds clarification to the fundamental requirements contained in the following Government Standards. The general requirements of this PTS section are located in PTS Section Z10, *General Performance Technical Specification*.

Industry standards, codes, and Government standards referenced in the section text that are not found in the Unified Master Reference List (UMRL) in the Construction Criteria Base (CCB) at the Whole Building Design Guide Website, are listed below for basic designation identification. Comply with the required and advisory portions of the current edition of the referenced standard at the time of contract award.

G30 1.1.1 Industry Standards and Codes

AMERICAN SOCIETY OF MECHANICAL ENGINEERS (ASME)

G30 1.1.2 Government Standards

UNIFIED FACILITIES CRITERIA (UFC)

UFC 1-200-01	General Building Requirements(A reference in this PTS section to UFC 1-200-01 requires compliance with the Tri-Service Core UFCs that are listed in UFGS Section 01 33 10.05 20, which includes the following significant UFC(s):UFC 3-201-01, Civil Engineering UFC 3-401-01, Mechanical Engineering)
UFC 3-600-01	Fire Protection Engineering
UFC 3-800-10N	Environmental Engineering for Facility Construction

G30 1.2 QUALITY ASSURANCE

Materials and assemblies installed in the work shall be inspected and found to be in compliance with industry standards and these specifications prior to acceptance of the work. Items found not to be in compliance shall be removed, or corrective measures taken, to assure compliance with the referenced standard. The Contractor shall perform field tests and provide labor, equipment and incidentals required for testing.

G30 1.2.1 Materials

All materials shall be new, and shall bear the label of standardizing agency whenever standards have been established and label service is normally and regularly furnished by the agency. All equipment provided shall be listed and labeled suitable for the specified purpose, environment, and application and installed in accordance with manufacturer’s recommendations.

G30 1.2.2 Additional Work

Provide such other labor and materials as are required for a complete and usable system in accordance with the requirements of the criteria listed, regardless of whether such materials and associated labor are called for elsewhere in this RFP.

G30 1.3 PERFORMANCE VERIFICATION AND ACCEPTANCE TESTING

Compliance with the requirements will be determined by a review of the design and construction submittals and by field inspection. See Section 01 33 10.05 20, *Design Submittal Procedures*, and Section 01 33 00.05 20, *Construction Submittal Procedures*, for additional requirements.

Verification of satisfactory utility system performance shall be via Performance Verification Testing, as detailed in this section of the RFP. Verification of satisfactory performance shall also be via testing as detailed in the paragraph, "Field Quality Control", in applicable UFGS Specification Sections utilized.

G30 1.3.4 Sanitary Sewer Distribution System Verification Testing

Provide testing on sewer mains and laterals in accordance with the state sewerage regulations.

G30 1.3.4.1 Deflection Test

Deflection of pipe in the installed pipeline under external loads must not exceed 4.5 percent of the average inside diameter of pipe, in accordance with ASTM D 2412.

G30 1.3.4.2 Leakage Tests

Test lines for leakage by either infiltration tests or exfiltration tests, or by low-pressure air tests in accordance with the following:

a. Exfiltration Tests:

ASTM C969 and perform calculations in accordance with its Appendix.

b. Low-pressure Air Tests:

1) Pipelines: ASTM C924 and perform calculations in accordance with its Appendix.

2) PVC plastic pipelines: UBPPA UNI-B-6 and ASTM F1147.

G30 1.3.4.3 TV Inspection for Sanitary Sewer

Post-installation TV inspection will be performed on all segments of the installed system when the total footage of sanitary sewer mains installed in the contract is in excess of 300 feet.

Complete the post-installation TV inspection to confirm that the completed lines are free of defects. For video recordings include an audio track recorded by the inspection technician during the actual inspection work describing the parameters of the line being inspected. The minimum information to be included is the pipe material, pipe size, starting and stopping manholes and descriptions of any features as they occur. Video recording playback must be at the same speed that it was recorded. Permanently label CDs / DVDs according to their contents; CDs / DVDs will become the property of the Government.

Provide all TV inspections of sanitary sewer mains in accordance with the Pipeline Assessment and Certification Program as sponsored by the National Association of Sewer Service Companies (NASSCO). Prior to initiating CCTV inspection, provide copies of PACP Certification of the operators that will be performing the work.

Complete pipe segments and manhole work, including pipe penetrations, manhole benches, main line and manhole visual inspection, pressure testing, deflection and leakage tests on a section of line (manhole to manhole) prior to performing TV.

Complete post-installation TV inspection in the presence of the Contracting Officer or his designated representative.

The importance of accurate measurements is emphasized. The meter device must be accurate to one tenth of a foot.

Utilize the full capabilities of the camera equipment to document the completion and the conformance of the work to the Contract Documents. Provide a full 360Â° view of the pipe, joints and service connections. Move the camera through the line in either direction at a moderate rate, stopping when necessary to permit proper documentation of the sewer's condition. The maximum speed must be no greater than 30 feet per minute. Use manual wenches, power winches, TV cable and

powered rewinds or other devices that do not obstruct the camera view or interfere with the proper documentation of the sewer conditions to move the camera through the sewer line.

Once video recording has commenced, the recording must be continuous, without interruption, until the termination manhole is reached.

Provide a color video showing the completed work. Prepare and submit Television Inspection Logs providing location of service connections along with the location of any discrepancies.

Keep computer printed location records (Television Inspection Logs) and clearly show the location and orientation in relation to an adjacent manhole for each point observed during the TV inspection. Record features of significance such as locations and orientations of service connections, pipe deflections, leaks, rolled or dislodged gaskets, sags or bellies in the line, or wide joints.

Document noted defects and lateral connections as color digital files and color hard copy prints. Photo logs must accompany each photo submitted.

Prior to submission of the TV inspection video, Television Inspection Logs, and digital photographs to the Contracting Officer, review the submittal items to ensure that they meet the quality criteria set forth in this specification. A copy of such video along with the Television Inspection Logs and Digital photographs must be supplied to the Contracting Officer within five (5) business days of completion of the video-inspection. In the event that the video, Television Inspection Logs or digital photographs are deemed of poor quality or substandard by the Contracting Officer, the videos, and / or Television Logs, or digital photographs will be returned and a re-inspection provided by the Contractor, at no additional cost to the Government.

G30 1.3.5 Sanitary Sewer Manholes Verification Testing

Provide a visual inspection of all manholes for proper grade and water tightness. Provide testing on sanitary sewer manholes in accordance with state regulations. At minimum, perform hydraulic testing in accordance with ASTM C 969/C 969M.

G30 1.3.7 Storm Sewer System Verification Testing

G30 1.3.7.1 Deflection Test

Deflection of pipe in the installed pipeline under external loads must not exceed 4.5 percent of the average inside diameter of pipe, in accordance with ASTM D 2412.

G30 1.3.7.2 TV Inspection for Storm Sewer Under Pavements

Post-installation TV inspection will be performed on all segments of the installed system when the total footage of storm sewer lines installed in the contract is in excess of 300 feet.

Complete the post-installation TV inspection to confirm that the completed lines are free of defects. For video recordings include an audio track recorded by the inspection technician during the actual inspection work describing the parameters of the line being inspected. The minimum information to be included is the pipe material, pipe size, starting and stopping manholes and descriptions of any features as they occur. Video recording playback must be at the same speed that it was recorded. Permanently label CDs / DVDs according to their contents; CDs / DVDs will become the property of the Government.

Provide all TV inspections of storm sewer lines in accordance with the Pipeline Assessment and Certification Program as sponsored by the National Association of Sewer Service Companies (NASSCO). Prior to initiating CCTV inspection, provide copies of PACP Certification of the operators that will be performing the work.

Complete pipe segments and manhole work, including pipe penetrations, manhole benches, main line and manhole visual inspection, pressure testing, and deflection test on a section of line (manhole to manhole) prior to performing TV.

Complete post-installation TV inspection in the presence of the Contracting Officer or his designated representative.

The importance of accurate measurements is emphasized. The meter device must be accurate to one tenth of a foot.

Utilize the full capabilities of the camera equipment to document the completion and the conformance of the work to the Contract Documents. Provide a full 360Â° view of the pipe, joints and service connections. Move the camera through the line in either direction at a moderate rate, stopping when necessary to permit proper documentation of the sewer's condition. The maximum speed must be no greater than 30 feet per minute. Use manual wenches, power winches, TV cable and powered rewinds or other devices that do not obstruct the camera view or interfere with the proper documentation of the sewer conditions to move the camera through the sewer line.

Once video recording has commenced, the recording must be continuous, without interruption, until the termination manhole is reached.

Provide a color video showing the completed work. Prepare and submit Television Inspection Logs providing location of service connections along with the location of any discrepancies.

Keep computer printed location records (Television Inspection

Logs) and clearly show the location and orientation in relation to an adjacent manhole for each point observed during the TV inspection. Record features of significance such as locations and orientations of service connections, pipe deflections, leaks, rolled or dislodged gaskets, sags or bellies in the line, or wide joints.

Document noted defects and lateral connections as color digital files and color hard copy prints. Photo logs must accompany each photo submitted.

Prior to submission of the TV inspection video, Television Inspection Logs, and digital photographs to the Contracting Officer, review the submittal items to insure that they meet the quality criteria set forth in this specification. A copy of such video along with the Television Inspection Logs and Digital photographs must be supplied to the Contracting Officer within five (5) business days of completion of the video -inspection. In the event that the video, Television Inspection Logs or digital photographs are deemed of poor quality or substandard by the Contracting Officer, the videos, and / or Television Logs, or digital photographs will be returned and a re-inspection provided by the Contractor, at no additional cost to the Government.

G30 1.4 DESIGN SUBMITTALS

Design Submittals shall be in accordance with UFGS section 01 33 10.05 20, *Design Submittal Procedures*, FC 1-300-09N, *Navy and Marine Corps Design Procedures*, UFC 3-201-01, *Civil Engineering*, and UFC 3-401-01, *Mechanical Engineering*.

G30 1.5 CONSTRUCTION SUBMITTALS

Submit construction submittals in accordance with PTS Section Z10, *General Performance Technical Specifications*. In addition to the Z10 requirements, the Designer of Record (DOR) shall approve the following construction submittals as a minimum:

All test reports.

G30 1.6 COORDINATION

To the extent that site work is indicated on the RFP drawings, verify that the locations and inverts of all site utility lines are coordinated with building utility lines. If necessary, make adjustments to the locations and inverts indicated on the RFP drawings in accordance with applicable codes and standards.

G30 1.7 ANTITERRORISM (AT) STANDARDS

Incorporate the minimum AT standards indicated in UFC 4-010-01, *DoD Minimum Antiterrorism Standards for Buildings*.

G30 1.8 BACKFLOW PREVENTION

Submit backflow prevention training certificates and backflow preventer devices certification in accordance with Section 01 50 00.05 20, *Temporary Facilities and Controls for Design-Build*.

G30 1.10 NACE CERTIFIED CATHODIC PROTECTION SPECIALIST QUALIFICATIONS

Submit qualifications of specialist prior to site welding. Certifications shall not be more than one year old. Submit documentation of NACE certification.

G30 1.11 EXCAVATION, BACKFILLING AND COMPACTION OF UTILITIES

Refer to Section G10, *Site Preparation*.

G30 1.12 DELIVERY, STORAGE AND HANDLING OF MATERIALS

Inspect materials delivered to site for damage. Unload and store with minimum handling. Store materials on site in enclosures or under protective covering. Store plastic piping, jointing materials and rubber gaskets under cover out of direct sunlight. Do not store materials directly on the ground. Keep inside of pipes, fittings, valves, and hydrants free of dirt and debris. Handle in a manner to ensure delivery to the trench in sound undamaged condition. Take special care to avoid injury to coatings and linings on pipe and fittings; make satisfactory repairs if coatings or linings are damaged. Carry, do not drag pipe to the trench.

G3020 SANITARY SEWER

G3020 1.1 GENERAL REQUIREMENTS

The gravity sanitary sewage collection system shall be designed and constructed in accordance with UFC 3-240-01, *Wastewater Collection*, and the state sewer collection and treatment regulations. Connect the new sanitary sewage collection system to the nearest existing sanitary manholes and/or sanitary lines adjacent to the project site. Provide design calculations that show the existing system is capable of handling the additional flows.

In areas where chemicals and other substances may be stored (including mechanical and electrical rooms), eliminate floor drains or make provisions to prevent spills from entering the sanitary sewer system. If there is process flow from equipment, discharge can be hard piped, with air gap, to the sanitary sewer.

Wherever possible, manholes and all other utility access structures shall be located out of paved areas.

G302001 SANITARY SEWER PIPING

G302001 1.1 GENERAL REQUIREMENTS

Provide all materials, equipment, labor, testing, and miscellaneous related items to provide sanitary sewage lines necessary for distribution and services to the buildings.

G302001 1.2 GRAVITY SEWER PIPING

Gravity sewer mains and laterals shall be PVC sewer pipe and fittings, except under roadways or at depths greater than 10 feet (3.0 m) where ductile iron pipe shall be provided.

G302001 1.2.1 Materials

a. PVC Gravity Sewer Pipe

1) Piping and Fittings: ASTM D3034, SDR 35. For depths greater than 10 feet (3.0 m), provide AWWA C900 and/or AWWA C905.

2) Joints: ASTM D3212 and ASTM F477.

b. Ductile Iron Gravity Sewer Pipe (for depths greater than 10 feet (3.0 m))

1) Piping: ASTM A746. Provide required Thickness Class based on design information and methods in ASTM A746.

2) Fittings: AWWA C110 or AWWA C153.

3) Joints: AWWA C111.

4) Interior Coating: AWWA C104.

5) Exterior Protection (if required): AWWA C105, polyethylene encasement.

G302001 1.2.2 Connections to Existing Lines

Obtain approval from the Contracting Officer before making a connection to an existing line. Conduct work so that there is minimum interruption of service on existing line and provide a new manhole at the connection point.

G302001 1.2.3 Installation

Install pipe, fittings and accessories in accordance with manufacturer's instructions.

a. PVC: ASTM D 2321. Do not use ASTM D 2321 Class IV or V materials for bedding, haunching or initial backfill materials.

b. Ductile Iron: AWWA C600.

Provide nondetectable warning tape and a continuous length of tracer wire for the full length of each run of nonmetallic piping below grade. Terminate tracer wire above grade at valve boxes and at exterior of building.

G302001 1.3 PIPING FOR CLEANOUTS

G302001 1.3.1 Materials

a. Cast-Iron Soil Pipe for Cleanouts

1) Pipe: ASTM A 74, service.

2) Joints: ASTM C 564 compression-type rubber gaskets.

3) Exterior Protection (if required): AWWA C105, polyethylene encasement.

G302001 1.3.2 Installation

Install cast iron pipe and fittings in accordance with the recommendations of the pipe manufacturer.

G302002 SANITARY SEWER MANHOLES & CLEANOUTS

G302002 1.1 GENERAL REQUIREMENTS

Provide all materials, equipment, labor, testing, and miscellaneous related items for the sanitary manholes in accordance with the following:

a. Manhole rim elevations shall be set flush with finished surface of paved areas or 1 inch (25 mm) above finished grade in unpaved areas.
b. Resilient connectors for making joints between manhole and pipes entering manhole shall conform to ASTM C 923M (ASTM C 923).
c. Provide drop manholes when a gravity sewer pipe enters a manhole at an elevation of 24 inches (610 mm) or more above the manhole invert.

G302002 1.2 PRECAST CONCRETE MANHOLES

ASTM C 478M (ASTM C 478); base and first riser shall be monolithic.

Precast manhole sections shall have:

a. ASTM C 990M (ASTM C 990) butyl gaskets;
b. ASTM C 443M (ASTM C 443) rubber O-ring joints; or
c. AASHTO M 198, Type B preformed plastic gaskets.

G302002 1.3 CAST-IN-PLACE CONCRETE MANHOLES

Reinforced concrete; designed according to ASTM C 890 for A-16 (AASHTO HS20-44), heavy-traffic, structural loading. Concrete work shall be in accordance with ACI 301M (ACI 301) and ACI 350-01; provide a minimum compressive strength of 4000 psi (28 MPa).

G302002 1.4 MANHOLE FRAMES AND COVERS

FS A-A-60005; cast iron or ductile iron; designed to accommodate the traffic loadings. The word "Sewer" shall be stamped or cast into covers so that it is plainly visible.

G302002 1.5 MANHOLE STEPS

a. Zinc-coated steel: 29 CFR 1910.27.
b. Plastic or rubber coating pressure molded to steel: ASTM D 4101, copolymer polypropylene; or ASTM C 443M (ASTM C 443), except shore A durometer hardness shall be 70 plus or minus 5.

Aluminum steps or rungs will not be permitted.

Steps are not required in manholes less than 4 feet (1.2 m) deep.

G302002 1.6 MANHOLE CONSTRUCTION

Where a new manhole is constructed on an existing line, remove existing pipe as necessary to construct the manhole. Cut existing pipe so that pipe ends are approximately flush with the interior face of manhole wall, but not protruding into the manhole. For changes in direction of the sewer and entering branches into the manhole, make a circular curve in the manhole invert of as large a radius as manhole size will permit. For cast-in-place concrete, no parging will be permitted on interior manhole walls.

G302002 1.7 CONNECTIONS TO EXISTING MANHOLES

Pipe connections to existing manholes shall be centered on the manhole. Holes for the new pipe shall be of sufficient diameter to allow packing cement mortar around the entire periphery of the pipe but no larger than 1.5 times the diameter of the pipe. Cutting the manhole shall be done in a manner that will cause the least damage to the walls.

G302002 1.8 CLEANOUTS

Construct cleanouts of cast iron soil pipe and fittings; see G302001, paragraph 1.3.

G302003 LIFT STATIONS AND PUMPING STATIONS

G302003 1.8 PIPING ACCESSORIES

G302003 1.8.1 Insulating Joints

Provide between pipes of dissimilar metals a rubber gasket or other approved type of insulating joint or dielectric coupling to effectively prevent metal-to-metal contact between adjacent sections of piping.

G302003 1.8.2 Accessories

Provide flanges, connecting pieces, transition glands, transition sleeves, and other adapters as required.

G302003 1.8.3 Flexible Flanged Coupling

Provide flexible flanged coupling applicable for sewage as indicated. Use flexible flanged coupling designed for a working pressure of 350 psi (2400 kPa).

G302090 OTHER SANITARY SEWER

G3030 STORM SEWER

Provide all materials, equipment, labor, testing, and miscellaneous related items to provide storm drainage collection system necessary to drain the site. The storm

sewer collection system shall be designed and constructed in accordance with UFC 3-201-01, *Civil Engineering*; the utility provider's requirements; and the state stormwater management laws and regulations. Design project site to prevent stormwater runoff in excess of the capacity of the existing utility system.

G303001 STORM SEWER PIPING

G303001 1.1 PIPING

Storm sewer piping less than 12 inches (300 mm) in diameter shall be PVC or ductile iron. Storm sewer piping 12 inches (300 mm) and larger in diameter shall be reinforced concrete or corrugated steel; corrugated aluminum and HDPE pipe may only be used when written approval is received by the Government's Civil Reviewer or indicated in another part of the RFP.

Subsurface drainage piping shall be perforated PVC or HDPE.

G303001 1.1.1 Materials

a. PVC Pipe

1) Piping and Fittings: ASTM D 3034, SDR 35.

2) Joints: ASTM D 3212 and ASTM F 477.

b. Ductile Iron Pipe

1) Piping: ASTM A 746. Provide required Thickness Class based on design information and methods in ASTM A 746.

2) Fittings: AWWA C110 or AWWA C153.

3) Joints: AWWA C111.

4) Interior Coating: AWWA C104.

5) Exterior Protection (if required): AWWA C105, polyethylene encasement.

c. Reinforced Concrete Pipe

1) Circular Pipe: ASTM C 76M (ASTM C 76). Provide required Class based on design information and methods in ASTM C 76M (ASTM C 76). Class III minimum.

2) Elliptical Pipe: ASTM C 507M (ASTM C 507). Provide required Class based on design information and methods in ASTM C 76M (ASTM C 76).

3) Joints:

a) ASTM C 990M (ASTM C 990) butyl gaskets;

b) ASTM C 443M (ASTM C 443) rubber O-ring joints; or

c) AASHTO M 198, Type B preformed plastic gaskets.

d. Corrugated Aluminum Pipe

1) Piping: ASTM B 745.

2) Joints: Coupling bands conforming to ASTM B 745/ B 745M.

3) Coating: Fully bituminous coated for all applications in accordance with ASTM A 849. For applications where piping is part of a piped storm sewer system (not a culvert), pipe shall be fully bituminous coated, invert (half) paved with concrete lining in accordance with ASTM A 849.

e. Corrugated Steel Pipe

1) Piping: ASTM A 760/A 760M.

2) Joints: Coupling bands conforming to ASTM A 760/A 760M.

3) Coating: Fully bituminous coated for all applications in accordance with ASTM A 849. For applications where piping is part of a piped storm sewer system (not a culvert), pipe shall be fully bituminous coated, invert (half) paved with concrete lining in accordance with ASTM A 849.

f. HDPE

1) Piping: AASHTO M 294 Type S, corrugated.

2) Joints: Soiltight.

g. Perforated PVC Pipe: ASTM D 2729.

h. Perforated HDPE Pipe

1) Piping and Fittings: AASHTO M 252, Type S, corrugated.

2) Joints: Soiltight.

G303001 1.1.2 Installation

Install piping in accordance with manufacturer’s recommendations and the following standards.

a. PVC: ASTM D 2321. Do not use ASTM D 2321 Class IV or V materials for bedding, haunching or initial backfill materials.
b. Ductile Iron: AWWA C600.
c. Reinforced Concrete: ACPA 01-102 and 01-103.
d. Corrugated Aluminum: ASTM B 788/B 788M.
e. Corrugated Steel: ASTM A 798/A 798M.
f. HDPE: CPPA 100.
g. Perforated PVC and Perforated HDPE: ASTM D 2321. Do not use ASTM D 2321 Class IV or V materials for bedding, haunching or initial backfill materials.

Provide nondetectable warning tape and a continuous length of tracer wire for the full length of each fun of nonmetallic piping below grade. Terminate tracer wire above grade at valve boxes and at exterior of building.

G303001 1.2 PIPING FOR CLEANOUTS

G303001 1.2.1 Materials

a. Cast-Iron Soil Pipe for Cleanouts

1) Pipe: ASTM A 74, service.

2) Joints: ASTM C 564 compression-type rubber gaskets.

3) Exterior Protection (if required): AWWA C105, polyethylene encasement.

G303001 1.2.2 Installation

Install cast iron pipe and fittings in accordance with the recommendations of the pipe manufacturer.

G303002 STORM SEWER STRUCTURES

G303002 1.1 GENERAL REQUIREMENTS

Provide all materials, equipment, labor, testing, and miscellaneous related items for the drainage structures in accordance with the following:

a. Structure rim elevations shall be set flush with finished surface of paved areas or 1 inch (25 mm) above finished grade in unpaved areas.
b. Provide resilient connectors for making joints between manhole and pipes entering manhole shall conform to ASTM C 923M (ASTM C 923).
c. Provide precast or cast-in-place concrete drainage structures, except cast-in-place concrete is required for airfield drainage structures, headwalls and gutters.

G303002 1.2 PRECAST CONCRETE INLETS

Provide work and materials in accordance with applicable requirements of the State Highway Specifications (SHS) and standards where the project is located.

G303002 1.3 CAST-IN-PLACE CONCRETE DRAINAGE STRUCTURES

Provide work and materials in accordance with drainage structures indicated in the State Highway Specifications (SHS) and standards where the project is located.

For airfield drainage structures, provide work and materials in accordance with FAA ACA 150/5370-10B.

G303002 1.4 DRAINAGE STRUCTURE FRAMES AND COVERS

FS A-A-60005; cast iron or ductile iron; designed to accommodate the traffic loadings. The word "Storm" shall be stamped or cast into covers so that it is plainly visible.

For airfield drainage structures, fabricate frames and covers of standard commercial grade steel welded by qualified welders in accordance with AWS

D1.1/D1.1M. Covers shall be of rolled steel floor plate having an approved anti-slip surface. Steel frames and covers shall be hot dipped galvanized after fabrication. At the contractor's option, ductile iron covers and frames may be used for airfield drainage structures if designed for a minimum proof load of 100,000 pounds (45,000 kg) in lieu of the steel frames and covers. Covers shall be of the same material as the frames (i.e. ductile iron frame with ductile iron cover, galvanized steel frame with galvanized steel cover). Proof loading shall be performed in accordance with FS A-A-60005 and ASTM A 48/A 48M. Proof loads shall be physically stamped into the cover. Provide the Contracting Officer copies of previous proof load test results performed on the same frames and covers as proposed for this contract. The top of the structure shall be modified to accept the ductile iron structure in lieu of the steel structure indicated. The finished structure shall be level and non-rocking, with the top flush with the surrounding pavement.

G303002 1.5 DRAINAGE STRUCTURE STEPS

a. Zinc-coated steel: 29 CFR 1910.27.
b. Plastic or rubber coating pressure molded to steel: ASTM D 4101, copolymer polypropylene; or ASTM C 443M (ASTM C 443), except shore A durometer hardness shall be 70 plus or minus 5.

Aluminum steps or rungs will not be permitted.

Steps are not required in structures less than 4 feet (1.2 m) deep.

G303002 1.6 DRAINAGE STRUCTURE CONSTRUCTION

Where a new structure is constructed on an existing line, remove existing pipe as necessary to construct the structure. Cut existing pipe so that pipe ends are approximately flush with the interior face of structure wall, but not protruding into the structure.

G303002 1.7 CONNECTIONS TO EXISTING STRUCTURES

Pipe connections to existing structures shall be centered on the structure. Holes for the new pipe shall be of sufficient diameter to allow packing cement mortar around the entire periphery of the pipe but no larger than 1.5 times the diameter of the pipe. Cutting the structure shall be done in a manner that will cause the least damage to the walls.

G303002 1.8 CLEANOUTS

Construct cleanouts of cast iron soil pipe and fittings; see G303001, paragraph 1.2.

G303003 LIFT STATIONS

A stormwater pump station(s) will not be allowed.

G303004 CULVERTS

Culverts less than 12 inches (300 mm) in diameter shall be PVC or ductile iron. Culverts 12 inches (300 mm) and larger in diameter shall be reinforced concrete or corrugated steel; corrugated aluminum and HDPE pipe may only be used when written

approval is received by the Government's Civil Reviewer or indicated in another part of the RFP.

Flared end sections shall the same material as pipe material.

Provide erosion control riprap in accordance with the State Highway Specifications (SHS) and standards where the project is located.

See G303001, paragraphs 1.1.1 and 1.1.2 for material and installation requirements.

G306006 GAS DISTRIBUTION PIPING (NATURAL & PROPANE)

G306006 1.1 STEEL PIPE

Gas piping shall be ASTM A 53, Type E (electric-resistance welded, Grade A or B) or Type S (seamless, Grade A or B), black steel. Provide Weight Class STD (Standard) for welding end connections. Provide Weight Class XS (Extra Strong) for threaded end connections.

G306006 1.2 POLYETHYLENE (PE)

PE pipe and heat fusion fittings shall conform to ASTM D 2513, Grade PE2406 or PE3408.

G306009 OTHER GAS DISTRIBUTION

G306009 1.1 WARNING & IDENTIFICATION TAPE

Detectable aluminum foil, plastic backed tape or detectable magnetic plastic tape manufactured specifically for warning and identifying buried piping.

-- End of Section --

PART FIVE – PRESCRIPTIVE SPECIFICATIONS

Prescriptive Specs

Demolition of the Steam System

Building 11 and Site Distribution Systems
P-816
FY-15 MILCON #1111695

Naval Station Great Lakes
Great Lakes, Illinois

8 April 2015

NOT USED

PART SIX – ATTACHMENTS

Attachments

Demolition of the Steam System

Building 11 and Site Distribution Systems
P-816
FY-15 MILCON #1111695

Naval Station Great Lakes
Great Lakes, Illinois

8 April 2015

This page intentionally left blank

LIST OF ATTACHMENTS

COVER PAGE.....i

TABLE OF CONTENTS.....iii

ATTACHMENT 1 – CONCEPTUAL PLANS BUILDING 11

ATTACHMENT 2 – CONCEPTUAL PLANS BUILDING 3000

ATTACHMENT 3 – SALVAGE EQUIPMENT

ATTACHMENT 4 – STEAM PIT INVENTORY

ATTACHMENT 5 – STEAM AND CONDENSATE DISTRIBUTION

ATTACHMENT 6 – TRESTLES S-4 REFERENCE DRAWINGS AND REPORT

ATTACHMENT 7 – TRESTLE 737 REFERENCE REPORT

ATTACHMENT 8 – BOILER 5 REFERENCE DRAWING

ATTACHMENT 9 – BOILER 6 REFERENCE DRAWING

ATTACHMENT 10 – ENVIRONMENTAL SURVEY BUILDING 3000

ATTACHMENT 11 – ENVIRONMENTAL SURVEY BUILDING 11 PART 1

ATTACHMENT 12 – ENVIRONMENTAL SURVEY BUILDING 11 PART 2

ATTACHMENT 13 – ENVIRONMENTAL SURVEY STEAM TUNNELS AND PITS

ATTACHMENT 14 – ENVIRONMENTAL SURVEY ABOVEGROUND STEAM LINE

ATTACHMENT 15 – ENVIRONMENTAL SURVEY OF ASSOCIATED BUILDINGS

ATTACHMENT 16 – ENVIRONMENTAL SURVEY OF CHASES

ATTACHMENT 17 – ENVIRONMENTAL SURVEY OF STEAM LINES INSTALLED POST 1991

ATTACHMENT 18 – ENVIRONMENTAL SURVEY OF TANK 11E

ATTACHMENT 19 – NSGL – RADIAL CHIMNEY REPORT

ATTACHMENT 20 – STEAM CHASE LOCATIONS

ATTACHMENT 21 – DD FORM 1354

ATTACHMENT 22 – DISPOSAL OF DON REAL PROPERTY FORM

ATTACHMENT 23 – EXISTING FIRE ALARM SYSTEM DRAWINGS