NAVFAC MIDLANT, Public Works Department, Maine

eProjects#: 1350913
N40085-FY-xx-C-xxxx

SPECIFICATION

R-22 Equipment Replacement And DDC Improvements

At the

Portsmouth Naval Shipyard, Kittery, Maine

ISSUED FOR:
100 PERCENT SUBMITTAL
July 31, 2015

PREPARED BY:
ACADIA ENGINEERS AND CONSTRUCTORS
13 Water Street
Newmarket, New Hampshire 03857

(Label each Discipline with Name of the person performing that role, label N/A if no one represented)

KEITH CHRISTOPHER		8/13/15
Submitted By: :(Printed Name of Project Mgr.)	Signature:	Date:
Approved By: (Printed Name of CIBL/PMEB Head)	Signature:	Date
Design Manager: (Printed Name of NAVFAC DM	Signature:	Date

PROJECT TABLE OF CONTENTS

DIVISION 01 - GENERAL REQUIREMENTS

01 11 00 SUMMARY OF WORK
a description of work covered in this contract and is required for use in all projects

01 14 00.00 22 WORK RESTRICTIONS (PWD ME) ALL PROJECTS
work and site restrictions

01 20 00.00 20 PRICE AND PAYMENT PROCEDURES (PWD ME) DESIGN-BID-BUILD PROJECTS
payment instruction paragraphs required for use in all projects

01 30 00 ADMINISTRATIVE REQUIREMENTS
general administrative paragraphs

01 32 16.00 20 CONSTRUCTION PROGRESS DOCUMENTATION
the preparation and use of Design-Bid-Build Schedules

01 32 17.00 25 NETWORK ANALYSIS SCHEDULES (NAS) (PWD ME)
preparation and use of Design-Bid-Build Network Analysis Schedule

01 33 00 SUBMITTAL PROCEDURES
general procedures regarding submittals, data normally submitted for review to establish conformance with the design concept and contract documents

01 35 26.00 22 GOVERNMENTAL SAFETY REQUIREMENTS (PWD ME)
safety and occupational health requirements for the protection of Contractor and Government personnel, property and resources

01 42 00 SOURCES FOR REFERENCE PUBLICATIONS
listing of organizations whose publications are referenced in other sections of the specifications.

01 45 00.00 20 QUALITY CONTROL (PWD ME)

01 50 00.00 22 TEMPORARY CONSTRUCTION FACILITIES AND CONTROLS (PWD ME)
temporary construction facilities, safety systems, construction traffic provisions, construction signage and controls over contractor operations required for use in all projects.

01 57 19.00 22 TEMPORARY ENVIRONMENTAL CONTROLS - PORTSMOUTH NAVAL SHIPYARD (PWD ME)
environmental protection and other environmental temporary controls

01 62 35 RECYCLED/RECOVERED/BIOBASED MATERIALS
use of products containing recycled or recovered materials. Include a properly edited version of this guide specification in every design-bid-build and design-build project. EPA recycled content requirements must be addressed in all projects regardless of optional

LEED/other recycled content goals

01 74 19.00 22 CONSTRUCTION AND DEMOLITION WASTE MANAGEMENT (PWD ME)

01 75 00 STARTING AND ADJUSTING
system testing and acceptance.

01 78 00.00 22 CLOSEOUT SUBMITTALS (PWD ME)
closeout submittals including: revised project documents, warranty management, testing, adjusting and balancing, O & M manuals, and final cleaning

01 78 23 OPERATION AND MAINTENANCE DATA
operation and maintenance (O&M) data normally shipped by a manufacturer at the same time as his associated piece of equipment is shipped. The requirements specified herein are intended to require those items of O&M data normally expected from the manufacturer of the associated equipment

01 78 24.00 20 FACILITY ELECTRONIC OPERATION AND MAINTENANCE SUPPORT INFORMATION (eOMSI)
Electronic Operation and Maintenance Support Information (eOMSI)

01 91 13 GENERAL COMMISSIONING REQUIREMENTS (PWD ME)
system testing and acceptance.

DIVISION 02 - EXISTING CONDITIONS

02 41 00 DEMOLITION AND DECONSTRUCTION
demolition, deconstructon, dismantling, reconditioning and disposal of existing building materials, equipment and utilities as a part of new construction or renovation work

02 82 16.00 22 ENGINEERING CONTROL OF ASBESTOS CONTAINING MATERIALS (PWD ME)
safety procedures and requirements for the demolition, removal, encapsulation, and disposal of asbestos containing materials (ACM)

02 83 13.00 22 LEAD IN CONSTRUCTION (PWD ME)
protection of workers, disposal of lead painted material

DIVISION 03 - CONCRETE

03 30 00 CAST-IN-PLACE CONCRETE
cast-in-place concrete not exposed to a marine or high chloride environment

DIVISION 05 - METALS

05 12 00 STRUCTURAL STEEL
structural steel used in building construction

05 50 13 MISCELLANEOUS METAL FABRICATIONS
miscellaneous metalwork

DIVISION 07 - THERMAL AND MOISTURE PROTECTION

07 60 00 FLASHING AND SHEET METAL
flashing and sheet metal work including gutters and downspouts, scuppers, splash pans, and sheet metal roofing

07 84 00 FIRESTOPPING
firestopping using tested and listed firestop systems to form an effective barrier against the spread of fire, smoke and gases, and to maintain the integrity of fire resistance rated construction

07 92 00 JOINT SEALANTS
sealants for normal building construction

DIVISION 09 - FINISHES

09 90 00 PAINTS AND COATINGS
painting of new and existing, interior and exterior substrates, including masonry, concrete, metal, wood and other miscellaneous materials

DIVISION 23 - HEATING, VENTILATING, AND AIR CONDITIONING

23 00 00 AIR SUPPLY, DISTRIBUTION, VENTILATION, AND EXHAUST SYSTEMS
air supply, distribution, ventilation, and exhaust portions of an HVAC system

23 03 00.00 20 BASIC MECHANICAL MATERIALS AND METHODS
the mechanical general requirements for all sections of Divisions: 21, FIRE SUPPRESSION; 22, PLUMBING; and 23 HEATING< VENTILATING AND AIR CONDITIONING

23 05 15 COMMON PIPING FOR HVAC
standard basic mechanical work

23 05 93 TESTING, ADJUSTING, AND BALANCING FOR HVAC
testing, adjusting, and balancing (TAB) of heating, ventilating, and air-conditioning (HVAC) air and water distribution systems

23 07 00 THERMAL INSULATION FOR MECHANICAL SYSTEMS
field applied thermal insulation on HVAC and plumbing systems located within, on, under, and adjacent to buildings; above and below ground

23 23 00 REFRIGERANT PIPING
refrigerant piping systems inside of buildings, or leading from equipment adjacent to buildings

23 64 26 CHILLED, CHILLED-HOT, AND CONDENSER WATER PIPING SYSTEMS
chilled water, chilled-hot (dual service) water and condenser water piping systems associated with HVAC

systems, and located within, on, or under buildings, or connected to equipment adjacent to buildings

23 81 00.00 20 UNITARY AIR CONDITIONING EQUIPMENT
room air conditioners, packaged terminal units, heat pumps, and air conditioners of the single package or split system type

23 81 23.00 20 COMPUTER ROOM AIR CONDITIONING UNITS
heating, ventilating, and cooling (HVAC) equipment for computer room air conditioning Units (CRACUs)

DIVISION 25 - INTEGRATED AUTOMATION

25 10 10.00 24 ICS FRONT END INTEGRATION (NAVFAC PWD)

25 13 00 UTILITY MONITORING AND CONTROL SYSTEM (UMCS) HARDWARE AND SOFTWARE
Utility Monitoring and Control System (UMCS) Front End using Open protocols (LonWorks, BACnet, Modbus, DNP and OPC), a UMCS using the Niagara Framework, and the integration of field control systems.

DIVISION 26 - ELECTRICAL

26 00 00.00 20 BASIC ELECTRICAL MATERIALS AND METHODS
electrical general requirements, complete

26 20 00 INTERIOR DISTRIBUTION SYSTEM
procurement, installation, and testing of electrical wiring systems for construction projects

26 33 53.00 20 UNINTERRUPTIBLE POWER SUPPLY (UPS)
static UPS to provide continuous ac power to critical loads and/or to improve the quality of ac power to critical loads. The covered range of UPS units is between 10kVA and 750kVA 3-phase systems only. Single phase systems are not addressed. This specification covers UPS with electro-chemical batteries. Electro-mechanical (stored energy) UPS are not addressed.

DIVISION 28 - ELECTRONIC SAFETY AND SECURITY

28 31 63.00 20 ANALOG/ADDRESSABLE INTERIOR FIRE ALARM SYSTEM
analog/ addressable interior fire alarm systems in single or multiple buildings

DIVISION 31 - EARTHWORK

31 23 00.00 22 EXCAVATION AND FILL (PWD ME)
earthwork requirements for buildings, roads, and utilities for projects located at Portsmouth Naval Shipyard

DIVISION 32 - EXTERIOR IMPROVEMENTS

32 12 16 HOT-MIX ASPHALT (HMA) FOR ROADS
hot-mix asphalt (HMA) courses (central-plant hot-mix) for roads

-- End of Project Table of Contents --

DOCUMENT 00 01 15

LIST OF DRAWINGS
02/11

PART 1 GENERAL

1.1 SUMMARY

This section lists the drawings for the project pursuant to contract clause "DFARS 252.236-7001, Contract Drawings, Maps and Specifications."

1.2 CONTRACT DRAWINGS

Contract drawings are as follows:

PAGE NO.	SHEET NO.	NAVFAC DWG NO.	NAVFAC DWG NO.	TITLE
1	G1.0	12703454	43-15-67	TITLE SHEET
2	G1.1	12703455	43-15-68	DRAWING SHEET LIST
3	G1.2	12703456	43-15-69	GENERAL NOTES & LEGEND
4	A1.0	12703457	43-15-72	CHASE & SOFFIT DETAILS
5	S1.0	12703458	43-15-74	STRUCTURAL GENERAL NOTES AND RTU SUPPORT DETAIL
6	ET1.0	12703459	13-15-196	BUILDING 13 RF INSTALLATION DETAILS
7	H1.0	12703460	14-15-173	BUILDING 14 HAZARDOUS MATERIAL SAMPLING PLAN
8	M1.0	12703461	14-15-174	BUILDING 14 HVAC LEGEND
9	MD2.0	12703462	14-15-175	BUILDING 14 HVAC FIRST FLOOR DEMO PLAN
10	M2.0	12703463	14-15-176	BUILDING 14 HVAC FIRST FLOOR PLAN
11	M3.0	12703464	14-15-177	BUILDING 14 HVAC CONTROLS
12	M3.1	12703465	14-15-178	BUILDING 14 HVAC CONTROLS
13	M3.2	12703466	14-15-179	BUILDING 14 HVAC CONTROLS
14	M4.0	12703467	14-15-180	BUILDING 14 HVAC SCHEDULES AND DETAILS
15	E1.0	12703468	14-15-181	BUILDING 14 ELECTRICAL LEGEND
16	ED2.0	12703469	14-15-182	BUILDING 14 ELECTRICAL FIRST FLOOR DEMOLITION PLAN
17	E2.0	12703470	14-15-183	BUILDING 14 ELECTRICAL FIRST FLOOR PLAN

18	E3.0	12703471	14-15-184	BUILDING 14 ELECTRICAL SCHEDULES
19	ET1.0	12703472	14-15-184	BUILDING 14 RF INSTALLATION DETAILS
20	H1.0	12703473	18-15-559	BUILDING 18 HAZARDOUS MATERIAL SAMPLING PLAN
21	H1.1	12703474	18-15-560	BUILDING 18 HAZARDOUS MATERIAL SAMPLING PLAN
22	H1.2	12703475	18-15-561	BUILDING 18 HAZARDOUS MATERIAL SAMPLING PLAN
23	C1.0	12703476	18-15-562	BUILDING 18 DEMOLITION PLAN
24	C2.0	12703477	18-15-563	BUILDING 18 SITE PLAN
25	M1.0	12703478	18-15-564	BUILDING 18 HVAC LEGEND
26	MD2.0A	12703479	18-15-565	BUILDING 18 HVAC FIRST FLOOR DEMO PLAN PART A
27	MD2.0B	12703480	18-15-566	BUILDING 18 HVAC FIRST FLOOR DEMO PLAN PART B
28	MD2.1A	12703481	18-15-567	BUILDING 18 ROOF DEMO PLAN PART A
29	M2.0A	12703482	18-15-568	BUILDING 18 HVAC FIRST FLOOR PLAN PART A
30	M2.0B	12703483	18-15-569	BUILDING 18 HVAC FIRST FLOOR PLAN PART B
31	M2.1A	12703484	18-15-570	BUILDING 18 HVAC ROOF PLAN PART A
32	M3.0	12703485	18-15-571	BUILDING 18 HVAC CONTROLS
33	M3.1	12703486	18-15-572	BUILDING 18 HVAC CONTROLS
34	M3.2	12703487	18-15-573	BUILDING 18 HVAC CONTROLS
35	M4.0	12703488	18-15-574	BUILDING 18 HVAC SCHEDULES AND DETAILS
36	E1.0	12703489	18-15-575	BUILDING 18 ELECTRICAL LEGEND
37	ED2.0A	12703490	18-15-576	BUILDING 18 ELECTRICAL FIRST FLOOR DEMOLITION PLAN PART A
38	ED2.0B	12703491	18-15-577	BUILDING 18 ELECTRICAL FIRST FLOOR DEMOLITION PLAN PART B
39	ED2.1A	12703492	18-15-578	BUILDING 18 ELECTRICAL ROOF DEMOLITION PLAN PART A
40	E2.0A	12703493	18-15-579	BUILDING 18 ELECTRICAL FIRST FLOOR PLAN PART A
41	E2.0B	12703494	18-15-580	BUILDING 18 ELECTRICAL FIRST FLOOR PLAN PART B
42	E2.1A	12703495	18-15-581	BUILDING 18 ELECTRICAL ROOF PLAN PART A
43	E3.0	12703496	18-15-582	BUILDING 18 ELECTRICAL SCHEDULES
44	ET1.0	12703497	18-15-583	BUILDING 18 RF INSTALLATION DETAILS

45	H1.0	12703498	22-15-520	BUILDING 22 HAZARDOUS MATERIAL SAMPLING PLAN
46	H1.1	12703499	22-15-521	BUILDING 22 HAZARDOUS MATERIAL SAMPLING PLAN
47	C1.0	12703500	22-15-522	BUILDING 22 DEMOLITION PLAN
48	C2.0	12703501	22-15-523	BUILDING 22 SITE PLAN
49	M1.0	12703502	22-15-524	BUILDING 22 HVAC LEGEND
50	MD2.0	12703503	22-15-525	BUILDING 22 HVAC FIRST FLOOR DEMO PLAN
51	MD2.1	12703504	22-15-526	BUILDING 22 HVAC SECOND FLOOR DEMO PLAN
52	MD2.2	12703505	22-15-527	BUILDING 22 HVAC THIRD FLOOR DEMO PLAN
53	M2.0	12703506	22-15-528	BUILDING 22 HVAC FIRST FLOOR PLAN
54	M2.1	12703507	22-15-529	BUILDING 22 HVAC SECOND FLOOR PLAN
55	M3.0	12703508	22-15-530	BUILDING 22 HVAC CONTROLS
56	M3.1	12703509	22-15-531	BUILDING 22 HVAC CONTROLS
57	M3.2	12703510	22-15-532	BUILDING 22 HVAC CONTROLS
58	M4.0	12703511	22-15-533	BUILDING 22 HVAC SCHEDULES AND DETAILS
59	E1.0	12703512	22-15-534	BUILDING 22 ELECTRICAL LEGEND
60	ED2.0	12703513	22-15-535	BUILDING 22 ELECTRICAL FIRST FLOOR DEMOLITION PLAN
61	ED2.1	12703514	22-15-536	BUILDING 22 ELECTRICAL SECOND FLOOR DEMOLITION PLAN
62	E2.0	12703515	22-15-537	BUILDING 22 ELECTRICAL FIRST FLOOR PLAN
63	E2.1	12703516	22-15-538	BUILDING 22 ELECTRICAL SECOND FLOOR PLAN
64	E2.2	12703517	22-15-539	BUILDING 22 ELECTRICAL THIRD FLOOR PLAN
65	E3.0	12703518	22-15-540	BUILDING 22 ELECTRICAL SCHEDULES
66	ET1.0	12703519	22-15-541	BUILDING 22 RF INSTALLATION DETAILS
67	H1.0	12703520	27-15-27	BUILDING 27 HAZARDOUS MATERIAL SAMPLING PLAN
68	H1.1	12703521	27-15-28	BUILDING 27 HAZARDOUS MATERIAL SAMPLING PLAN
69	M1.0	12703522	27-15-29	BUILDING 27 HVAC LEGEND
70	MD2.0	12703523	27-15-30	BUILDING 27 HVAC FIRST FLOOR DEMO PLAN
71	MD2.1	12703524	27-15-31	BUILDING 27 HVAC SECOND FLOOR DEMO PLAN

72	M2.0	12703525	27-15-32	BUILDING 27 HVAC FIRST FLOOR PLAN
73	M2.1	12703526	27-15-33	BUILDING 27 HVAC SECOND FLOOR PLAN
74	M3.0	12703527	27-15-34	BUILDING 27 HVAC CONTROLS
75	M3.1	12703528	27-15-35	BUILDING 27 HVAC CONTROLS
76	M3.2	12703529	27-15-36	BUILDING 27 HVAC CONTROLS
77	M4.0	12703530	27-15-37	BUILDING 27 HVAC SCHEDULES AND DETAILS
78	E1.0	12703531	27-15-38	BUILDING 27 ELECTRICAL LEGEND
79	ED2.0	12703532	27-15-39	BUILDING 27 ELECTRICAL FIRST FLOOR DEMOLITION PLAN
80	ED2.1	12703533	27-15-40	BUILDING 27 ELECTRICAL SECOND FLOOR DEMOLITION PLAN
81	E2.0	12703534	27-15-41	BUILDING 27 ELECTRICAL FIRST FLOOR PLAN
82	E2.1	12703535	27-15-42	BUILDING 27 ELECTRICAL SECOND FLOOR PLAN
83	E3.0	12703536	27-15-43	BUILDING 27 ELECTRICAL ONE LINE DIAGRAM & SCHEDULES
84	ET1.0	12703537	27-15-44	BUILDING 27 RF INSTALLATION DETAILS
85	H1.0	12703538	29-15-398	BUILDING 29 HAZARDOUS MATERIAL SAMPLING PLAN
86	C1.0	12703539	29-15-399	BUILDING 29 DEMOLITION PLAN
87	C2.0	12703540	29-15-400	BUILDING 29 SITE PLAN
88	M1.0	12703541	29-15-401	BUILDING 29 HVAC LEGEND
89	MD2.0	12703542	29-15-402	BUILDING 29 HVAC FIRST FLOOR DEMO PLAN
90	M2.0	12703543	29-15-403	BUILDING 29 HVAC FIRST FLOOR PLAN
91	M3.0	12703544	29-15-404	BUILDING 29 HVAC CONTROLS
92	M3.1	12703545	29-15-405	BUILDING 29 HVAC CONTROLS
93	M3.2	12703546	29-15-406	BUILDING 29 HVAC CONTROLS
94	M3.3	12703547	29-15-407	BUILDING 29 HVAC CONTROLS AND DETAILS
95	M4.0	12703548	29-15-408	BUILDING 29 HVAC SCHEDULES
96	E1.0	12703549	29-15-409	BUILDING 29 ELECTRICAL LEGEND
97	ED2.0	12703550	29-15-410	BUILDING 29 ELECTRICAL FIRST FLOOR DEMOLITION PLAN
98	E2.0	12703551	29-15-411	BUILDING 29 ELECTRICAL FIRST FLOOR PLAN

99	E3.0	12703552	29-15-412	BUILDING 29 ELECTRICAL SCHEDULES
100	ET1.0	12703553	29-15-413	BUILDING 29 RF INSTALLATION DETAILS
101	H1.0	12703554	31-15-47	BUILDING 31 HAZARDOUS MATERIAL SAMPLING PLAN
102	M1.0	12703555	31-15-48	BUILDING 31 HVAC LEGEND
103	MD2.0	12703556	31-15-49	BUILDING 31 HVAC FIRST FLOOR DEMO PLAN
104	M2.0	12703557	31-15-50	BUILDING 31 HVAC FIRST FLOOR PLAN
105	M3.0	12703558	31-15-51	BUILDING 31 HVAC CONTROLS
106	M3.1	12703559	31-15-52	BUILDING 31 HVAC CONTROLS
107	M3.2	12703560	31-15-53	BUILDING 31 HVAC CONTROLS
108	M4.0	12703561	31-15-54	BUILDING 31 HVAC SCHEDULES AND DETAILS
109	E1.0	12703562	31-15-55	BUILDING 31 ELECTRICAL LEGEND
110	ED2.0	12703563	31-15-56	BUILDING 31 ELECTRICAL FIRST FLOOR DEMOLITION PLAN
111	E2.0	12703564	31-15-57	BUILDING 31 ELECTRICAL FIRST FLOOR PLAN
112	E3.0	12703565	31-15-58	BUILDING 31 ELECTRICAL SCHEDULES
113	ET1.0	12703566	31-15-59	BUILDING 31 RF INSTALLATION DETAILS
114	C1.0	12703567	43-15-70	BUILDING 43 DEMOLITION PLAN
115	C2.0	12703568	43-15-71	BUILDING 43 SITE PLAN
116	A1.0	12703569	43-15-73	BUILDING 43 CONTROL CENTER PARTIAL FLOOR PLAN AND DETAILS
117	M1.0	12703570	43-15-75	BUILDING 43 HVAC LEGEND
118	M2.0	12703571	43-15-76	BUILDING 43 HVAC FIRST FLOOR PLAN
119	M3.0	12703572	43-15-77	BUILDING 43 HVAC CONTROLS
120	M3.1	12703573	43-15-78	BUILDING 43 HVAC CONTROLS
121	M3.2	12703574	43-15-79	BUILDING 43 HVAC CONTROLS
122	M4.0	12703575	43-15-80	BUILDING 43 HVAC SCHEDULES AND DETAILS
123	E1.0	12703576	43-15-81	BUILDING 43 ELECTRICAL LEGEND
124	E2.0	12703577	43-15-82	BUILDING 43 ELECTRICAL FIRST FLOOR PARTIAL PLAN MINI ROC CENTER LOCATION
125	E3.0	12703578	43-15-83	BUILDING 43 ELECTRICAL SCHEDULES

126	ET1.0	12703579	43-15-84	BUILDING 43 RF INSTALLATION DETAILS
127	ET2.0	12703580	43-15-85	RF NETWORK OVERVIEW
128	H1.0	12703581	44-15-144	BUILDING 44 HAZARDOUS MATERIAL SAMPLING PLAN
129	C1.0	12703582	44-15-145	BUILDING 44 DEMOLITION PLAN
130	C2.0	12703583	44-15-146	BUILDING 44 SITE PLAN
131	M1.0	12703584	44-15-147	BUILDING 44 HVAC LEGEND
132	MD2.0	12703585	44-15-148	BUILDING 44 HVAC FIRST FLOOR DEMO PLAN
133	M2.0	12703586	44-15-149	BUILDING 44 HVAC FIRST FLOOR PLAN
134	M3.0	12703587	44-15-150	BUILDING 44 HVAC CONTROLS
135	M3.1	12703588	44-15-151	BUILDING 44 HVAC CONTROLS
136	M3.2	12703589	44-15-152	BUILDING 44 HVAC CONTROLS
137	M4.0	12703590	44-15-153	BUILDING 44 HVAC SCHEDULES AND DETAILS
138	E1.0	12703591	44-15-154	BUILDING 44 ELECTRICAL LEGEND
139	ED2.0	12703592	44-15-155	BUILDING 44 ELECTRICAL FIRST FLOOR DEMOLITION PLAN
140	E2.0	12703593	44-15-156	BUILDING 44 ELECTRICAL FIRST FLOOR PLAN
141	E3.0	12703594	44-15-157	BUILDING 44 ELECTRICAL SCHEDULES
142	ET1.0	12703595	44-15-158	BUILDING 44 RF INSTALLATION DETAILS
143	H1.0	12703596	59-15-159	BUILDING 59 HAZARDOUS MATERIAL SAMPLING PLAN
144	M1.0	12703597	59-15-160	BUILDING 59 HVAC LEGEND
145	MD2.0	12703598	59-15-161	BUILDING 59 HVAC FIRST FLOOR DEMO PLAN
146	M2.0	12703599	59-15-162	BUILDING 59 HVAC FIRST FLOOR PLAN
147	M3.0	12703600	59-15-163	BUILDING 59 HVAC CONTROLS
148	M3.1	12703601	59-15-164	BUILDING 59 HVAC CONTROLS
149	M3.2	12703602	59-15-165	BUILDING 59 HVAC CONTROLS
150	M4.0	12703603	59-15-166	BUILDING 59 HVAC SCHEDULES AND DETAILS
151	E1.0	12703604	59-15-167	BUILDING 59 ELECTRICAL LEGEND
152	ED2.0	12703605	59-15-168	BUILDING 59 ELECTRICAL FIRST FLOOR DEMOLITION PLAN

153	E2.0	12703606	59-15-169	BUILDING 59 ELECTRICAL FIRST FLOOR PLAN
154	E3.0	12703607	59-15-170	BUILDING 59 ELECTRICAL SCHEDULES
155	ET1.0	12703608	59-15-171	BUILDING 59 RF INSTALLATION DETAILS
156	M1.0	12703609	60-15-344	BUILDING 60 HVAC LEGEND
157	M2.0	12703610	60-15-345	BUILDING 60 HVAC FIRST FLOOR PARTIAL PLAN B, SCHEDULES & CONTROLS
158	M3.0	12703611	60-15-346	BUILDING 60 HVAC CONTROLS
159	M3.1	12703612	60-15-347	BUILDING 60 HVAC CONTROLS
160	E1.0	12703613	60-15-348	BUILDING 60 ELECTRICAL LEGEND, FIRST FLOOR PARTIAL PLAN & PANELBOARD SCHEDULES
161	ET1.0	12703614	60-15-349	BUILDING 60 RF INSTALLATION DETAILS
162	H1.0	12703615	79-15-569	BUILDING 79 HAZARDOUS MATERIAL SAMPLING PLAN
163	H1.1	12703616	79-15-570	BUILDING 79 HAZARDOUS MATERIAL SAMPLING PLAN
164	M1.0	12703617	79-15-571	BUILDING 79 HVAC LEGEND
165	MD2.0	12703618	79-15-572	BUILDING 79 HVAC SECOND FLOOR DEMO PLAN PART A
166	MD2.1	12703619	79-15-573	BUILDING 79 HVAC THIRD FLOOR DEMO PLAN PART A
167	MD2.2	12703620	79-15-574	BUIDLING 79 HVAC ROOF DEMO PLAN PART A
168	M2.0	12703621	79-15-575	BUILDING 79 HVAC SECOND FLOOR PLAN PART A
169	M2.1	12703622	79-15-576	BUILDING 79 HVAC THIRD FLOOR PLAN PART A
170	M2.2	12703623	79-15-577	BUILDING 79 HVAC ROOF PLAN PART A
171	M3.0	12703624	79-15-578	BUILDING 79 HVAC CONTROLS
172	M3.1	12703625	79-15-579	BUILDING 79 HVAC CONTROLS
173	M3.2	12703626	79-15-580	BUILDING 79 HVAC CONTROLS
174	M4.0	12703627	79-15-581	BUILDING 79 HVAC SCHEDULES AND DETAILS
175	E1.0	12703628	79-15-582	BUILDING 79 ELECTRICAL LEGEND
176	ED2.0A	12703629	79-15-583	BUILDING 79 ELECTRICAL SECOND FLOOR DEMOLITION PLAN PART A
177	ED2.1A	12703630	79-15-584	BUILDING 79 ELECTRICAL THIRD FLOOR DEMOLITION PLAN PART A
178	ED2.2A	12703631	79-15-585	BUILDING 79 ELECTRICAL ROOF DEMOLITION PLAN PART A
179	E2.0A	12703632	79-15-586	BUILDING 79 ELECTRICAL SECOND FLOOR PLAN PART A

180	E2.1A	12703633	79-15-587	BUILDING 79 ELECTRICAL THIRD FLOOR PLAN PART A
181	E2.2A	12703634	79-15-588	BUILDING 79 ELECTRICAL ROOF PLAN PART A
182	E3.0	12703635	79-15-589	BUILDING 79 ELECTRICAL SCHEDULES
183	ET1.0	12703636	79-15-590	BUILDING 79 RF INSTALLATION DETAILS
184	H1.0	12703637	86-15-918	BUILDING 86 HAZARDOUS MATERIAL SAMPLING PLAN
185	H1.1	12703638	86-15-919	BUILDING 86 HAZARDOUS MATERIAL SAMPLING PLAN
186	H1.2	12703639	86-15-920	BUILDING 86 HAZARDOUS MATERIAL SAMPLING PLAN
187	H1.3	12703640	86-15-921	BUILDING 86 HAZARDOUS MATERIAL SAMPLING PLAN
188	H1.4	12703641	86-15-922	BUILDING 86 HAZARDOUS MATERIAL SAMPLING PLAN
189	M1.0	12703642	86-15-923	BUILDING 86 HVAC LEGEND
190	MD2.0E	12703643	86-15-924	BUILDING 86 BASEMENT FLOOR DEMO PLAN EAST
191	MD2.1E	12703644	86-15-925	BUILDING 86 FIRST FLOOR DEMO PLAN EAST
192	MD2.1W	12703645	86-15-926	BUILDING 86 FIRST FLOOR DEMO PLAN WEST
193	MD2.2W	12703646	86-15-927	BUILDING 86 HVAC ROOF DEMO PLAN WEST
194	M2.0E	12703647	86-15-928	BUILDING 86 HVAC BASEMENT FLOOR PLAN
195	M2.1E	12703648	86-15-929	BUILDING 86 FIRST FLOOR PLAN EAST
196	M2.1W	12703649	86-15-930	BUILDING 86 FIRST FLOOR PLAN WEST
197	M2.2W	12703650	86-15-931	BUILDING 86 HVAC ROOF PLAN WEST
198	M3.0	12703651	86-15-932	BUILDING 86 HVAC CONTROLS
199	M3.1	12703652	86-15-933	BUILDING 86 HVAC CONTROLS
200	M3.2	12703653	86-15-934	BUILDING 86 HVAC CONTROLS
201	M3.3	12703654	86-15-935	BUILDING 86 HVAC CONTROLS & DETAILS
202	M4.0	12703655	86-15-936	BUILDING 86 HVAC SCHEDULES
203	E1.0	12703656	86-15-943	BUILDING 86 ELECTRICAL LEGEND
204	ED2.0E	12703657	86-15-944	BUILDING 86 ELECTRICAL BASEMENT DEMOLITION PLAN EAST
205	ED2.1E	12703658	86-15-945	BUILDING 86 ELECTRICAL FIRST FLOOR DEMOLITION PLAN EAST
206	ED2.1W	12703659	86-15-946	BUILDING 86 ELECTRICAL FIRST FLOOR DEMOLITION PLAN WEST

207	ED2.2E	12703660	86-15-947	BUILDING 86 ELECTRICAL ROOF DEMOLITION PLAN EAST
208	ED2.2W	12703661	86-15-948	BUILDING 86 ELECTRICAL ROOF DEMOLITION PLAN WEST
209	E2.0E	12703662	86-15-949	BUILDING 86 ELECTRICAL BASEMENT FLOOR PLAN EAST
210	E2.1E	12703663	86-15-950	BUILDING 86 ELECTRICAL FIRST FLOOR PLAN EAST
211	E2.1W	12703664	86-15-951	BUILDING 86 ELECTRICAL FIRST FLOOR PLAN WEST
212	E2.2E	12703665	86-15-952	BUILDING 86 ELECTRICAL ROOF PLAN EAST
213	E2.2W	12703666	86-15-953	BUILDING 86 ELECTRICAL ROOF PLAN WEST
214	E3.0	12703667	86-15-954	BUILDING 86 ELECTRICAL SCHEDULES
215	M1.0A	12703668	86-15-937	BUILDING 86A HVAC LEGEND
216	MD2.0A	12703669	86-15-938	BUILDING 86A HVAC PENTHOUSE FLOOR PLAN & SCHEDULES
217	M2.0A	12703670	86-15-939	BUILDING 86A HVAC PENTHOUSE PLAN & SCHEDULES
218	M3.0A	12703671	86-15-940	BUILDING 86A HVAC CONTROLS
219	M3.1A	12703672	86-15-941	BUILDING 86A HVAC CONTROLS
220	M3.2A	12703673	86-15-942	BUILDING 86A HVAC CONTROLS
221	E1.0A	12703674	86-15-955	BUILDING 86A ELECTRICAL LEGEND
222	E2.0A	12703675	86-15-956	BUILDING 86A ELECTRICAL PENTHOUSE PLAN
223	ET1.0	12703676	86-15-957	BUILDING 86 RF INSTALLATION DETAILS
224	M1.0	12703677	96-15-532	BUILDING 96 HVAC LEGEND
225	MD2.0A	12703678	96-15-533	BUILDING 96 HVAC SECOND FLOOR DEMO PLAN PART A
226	MD2.0D	12703679	96-15-534	BUILDING 96 HVAC SECOND FLOOR DEMO PLAN PART D
227	M2.0A	12703680	96-15-535	BUILDING 96 HVAC SECOND FLOOR PLAN PART A
228	M2.0D	12703681	96-15-536	BUILDING 96 HVAC SECOND FLOOR PLAN PART D
229	M3.0	12703682	96-15-537	BUILDING 96 HVAC CONTROLS
230	M3.1	12703683	96-15-538	BUILDING 96 HVAC CONTROLS
231	M3.2	12703684	96-15-539	BUILDING 96 HVAC CONTROLS
232	M4.0	12703685	96-15-540	BUILDING 96 HVAC SCHEDULES AND DETAILS
233	E1.0	12703686	96-15-541	BUILDING 96 ELECTRICAL LEGEND

234	ED2.0A	12703687	96-15-542	BUILDING 96 ELECTRICAL SECOND FLOOR DEMOLITION PLAN PART A
235	ED2.0D	12703688	96-15-543	BUILDING 96 ELECTRICAL SECOND FLOOR DEMOLITION PLAN PART D
236	E2.0A	12703689	96-15-544	BUILDING 96 ELECTRICAL SECOND FLOOR PLAN PART A
237	E2.0D	12703690	96-15-545	BUILDING 96 ELECTRICAL SECOND FLOOR PLAN PART D
238	E3.0	12703691	96-15-546	BUILDING 96 ELECTRICAL SCHEDULES
239	ET1.0	12703692	96-15-547	BUILDING 96 RF INSTALLATION DETAILS
240	C1.0	12703693	99-15-142	BUILDING 99 DEMOLITION PLAN
241	C2.0	12703694	99-15-143	BUILDING 99 SITE PLAN
242	M1.0	12703695	99-15-144	BUILDING 99 HVAC LEGEND
243	MD2.0	12703696	99-15-145	BUILDING 99 HVAC FIRST FLOOR DEMO PLAN
244	M2.0	12703697	99-15-146	BUILDING 99 HVAC FIRST FLOOR PLAN
245	M3.0	12703698	99-15-147	BUILDING 99 HVAC CONTROLS
246	M3.1	12703699	99-15-148	BUILDING 99 HVAC CONTROLS
247	M3.2	12703700	99-15-149	BUILDING 99 HVAC CONTROLS
248	M4.0	12703701	99-15-150	BUILDING 99 HVAC SCHEDULES AND DETAILS
249	E1.0	12703702	99-15-151	BUILDING 99 ELECTICAL LEGEND
250	ED2.0	12703703	99-15-152	BUILDING 99 ELECTRICAL FIRST FLOOR DEMOLITION PLAN
251	E2.0	12703704	99-15-153	BUILDING 99 ELECTRICAL FIRST FLOOR PLAN
252	ET1.0	12703705	99-15-154	BUILDING 99 RF INSTALLATION DETAILS
253	H1.0	12703706	153-15-349	BUILDING 153 HAZARDOUS MATERIAL SAMPLING PLAN
254	H1.1	12703707	153-15-350	BUILDING 153 HAZARDOUS MATERIAL SAMPLING PLAN
255	C1.0	12703708	153-15-351	BUILDING 153 DEMOLITION PLAN
256	C2.0	12703709	153-15-352	BUILDING 153 SITE PLAN
257	M1.0	12703710	153-15-353	BUILDING 153 HVAC LEGEND
258	MD2.0B	12703711	153-15-354	BUILDING 153 HVAC FIRST FLOOR DEMO PLAN PART B
259	MD2.1B	12703712	153-15-355	BUILDING 153 HVAC SECOND FLOOR DEMO PLAN PART B
260	M2.0B	12703713	153-15-356	BUILDING 153 HVAC FIRST FLOOR PLAN PART B

261	M2.1B	12703714	153-15-357	BUILDING 153 HVAC SECOND FLOOR PLAN PART B
262	M3.0	12703715	153-15-358	BUILDING 153 HVAC CONTROLS
263	M3.1	12703716	153-15-359	BUILDING 153 HVAC CONTROLS
264	M3.2	12703717	153-15-360	BUILDING 153 HVAC CONTROLS
265	M4.0	12703718	153-15-361	BUILDING 153 HVAC SCHEDULES AND DETAILS
266	E1.0	12703719	153-15-362	BUILDING 153 ELECTRICAL LEGEND
267	ED2.0B	12703720	153-15-363	BUILDING 153 ELECTRICAL FIRST FLOOR DEMOLITION PLAN PART B
268	ED2.1B	12703721	153-15-364	BUILDING 153 ELECTRICAL SECOND FLOOR DEMOLITION PLAN PART B
269	E2.0B	12703722	153-15-365	BUILDING 153 ELECTRICAL FIRST FLOOR PLAN PART B
270	E2.1B	12703723	153-15-366	BUILDING 153 ELECTRICAL SECOND FLOOR PLAN PART B
271	E3.0	12703724	153-15-367	BUILDING 153 ELECTRICAL SCHEDULES
272	ET1.0	12703725	153-15-368	BUILDING 153 RF INSTALLATION DETAILS
273	H1.0	12703726	156-15-225	BUILDING 156 HAZARDOUS MATERIAL SAMPLING PLAN
274	M1.0	12703727	156-15-226	BUILDING 156 HVAC LEGEND
275	MD2.0	12703728	156-15-227	BUILDING 156 HVAC FIRST FLOOR DEMO PLAN
276	M2.0	12703729	156-15-228	BUILDING 156 HVAC FIRST FLOOR PLAN
277	M3.0	12703730	156-15-229	BUILDING 156 HVAC CONTROLS
278	M3.1	12703731	156-15-230	BUILDING 156 HVAC CONTROLS
279	M3.2	12703732	156-15-231	BUILDING 156 HVAC CONTROLS
280	M4.0	12703733	156-15-232	BUILDING 156 HVAC SCHEDULES
281	E1.0	12703734	156-15-233	BUILDING 156 ELECTRICAL LEGEND
282	ED2.0	12703735	156-15-234	BUILDING 156 ELECTRICAL BASEMENT DEMOLITION PART PLAN AND FIRST FLOOR DEMOLITION PLAN
283	E2.0	12703736	156-15-235	BUILDING 156 ELECTRICAL BASEMENT PART PLAN AND FIRST FLOOR PART PLAN
284	E3.0	12703737	156-15-236	BUILDING 156 ELECTRICAL SCHEDULES
285	ET1.0	12703738	156-15-237	BUILDING 156 RF INSTALLATION DETAILS
286	H1.0	12703739	170-15-718	BUILDING 170 HAZARDOUS MATERIAL SAMPLING PLAN
287	H1.1	12703740	170-15-719	BUILDING 170 HAZARDOUS MATERIAL SAMPLING PLAN

288	H1.2	12703741	170-15-720	BUILDING 170 HAZARDOUS MATERIAL SAMPLING PLAN
289	H1.3	12703742	170-15-721	BUILDING 170 HAZARDOUS MATERIAL SAMPLING PLAN
290	M1.0	12703743	170-15-722	BUILDING 170 HVAC LEGEND
291	MD2.0	12703744	170-15-723	BUILDING 170 HVAC SIXTH FLOOR DEMO PLAN PART B
292	MD2.1A	12703745	170-15-724	BUILDING 170 HVAC ROOF DEMO PLAN PART A
293	MD2.1B	12703746	170-15-725	BUILDING 170 HVAC ROOF DEMO PLAN PART B
294	MD2.1C	12703747	170-15-726	BUILDING 170 HVAC ROOF DEMO PLAN PART C
295	M2.0	12703748	170-15-727	BUILDING 170 HVAC SIXTH FLOOR PLAN PART B & SIXTH FLOOR PLAN PART C PARTIAL PLAN
296	M2.1A	12703749	170-15-728	BUILDING 170 HVAC ROOF PLAN PART A
297	M2.1B	12703750	170-15-729	BUILDING 170 HVAC ROOF PLAN PART B
298	M2.1C	12703751	170-15-730	BUIDLING 170 HVAC ROOF PLAN PART C
299	M3.0	12703752	170-15-731	BUILDING 170 HVAC CONTROLS
300	M3.1	12703753	170-15-732	BUILDING 170 HVAC CONTROLS
301	M3.2	12703754	170-15-733	BUILDING 170 HVAC CONTROLS
302	M3.3	12703755	170-15-734	BUILDING 170 HVAC CONTROLS
303	M3.4	12703756	170-15-735	BUILDING 170 HVAC DETAILS
304	M4.0	12703757	170-15-736	BUILDING 170 HVAC SCHEDULES
305	E1.0	12703758	170-15-737	BUILDING 170 ELECTRICAL LEGEND
306	ED2.0B	12703759	170-15-738	BUILDING 170 ELECTRICAL SIXTH FLOOR DEMOLITION PLAN PART B
307	ED2.1A	12703760	170-15-739	BUILDING 170 ELECTRICAL ROOF DEMOLITION PLAN PART A
308	ED2.1B	12703761	170-15-740	BUILDING 170 ELECTRICAL ROOF DEMOLITION PLAN PART B
309	ED2.1C	12703762	170-15-741	BUILDING 170 ELECTRICAL ROOF DEMOLITION PLAN PART C
310	E2.0B	12703763	170-15-742	BUILDING 170 ELECTRICAL SIXTH FLOOR PLAN PART B
311	E2.1A	12703764	170-15-743	BUILDING 170 ELECTRICAL ROOF PLAN PART A
312	E2.1B	12703765	170-15-744	BUILDING 170 ELECTRICAL ROOF PLAN PART B
313	E2.1C	12703766	170-15-745	BUILDING 170 ELECTRICAL ROOF PLAN PART C
314	E3.0	12703767	170-15-746	BUILDING 170 ELECTRICAL ONE LINE & MECHANICAL EQUIPMENT SCHEDULE

315	E4.0	12703768	170-15-747	BUILDING 170 ELECTRICAL PANELBOARD SCHEDULES
316	ET1.0	12703769	170-15-748	BUILDING 170 RF INSTALLATION DETAILS
317	H1.0	12703770	238-15-446	BUILDING 238 HAZARDOUS MATERIAL SAMPLING PLAN
318	M1.0	12703771	238-15-447	BUILDING 238 HVAC LEGEND
319	MD2.0	12703772	238-15-448	BUILDING 238 HVAC ROOF DEMO PLAN PART B AND SECOND FLOOR MECHANICAL ROOM
320	M2.0	12703773	238-15-449	BUILDING 238 HVAC ROOF PLAN PART B
321	M3.0	12703774	238-15-450	BUILDING 238 HVAC CONTROLS
322	M3.1	12703775	238-15-451	BUILDING 238 HVAC CONTROLS
323	M3.2	12703776	238-15-452	BUILDING 238 HVAC CONTROLS
324	M4.0	12703777	238-15-453	BUILDING 238 HVAC SCHEDULES AND DETAILS
325	E1.0	12703778	238-15-454	BUILDING 238 ELECTRICAL LEGEND
326	ED2.0B	12703779	238-15-455	BUILDING 238 ELECTRICAL FIRST FLOOR DEMOLITION PLAN PART B
327	E2.0B	12703780	238-15-456	BUILDING 238 ELECTRICAL FIRST FLOOR PLAN PART B
328	E3.0	12703781	238-15-457	BUILDING 238 ELECTRICAL SCHEDULES
329	ET1.0	12703782	238-15-458	BUILDING 238 RF INSTALLATION DETAILS
330	M1.0	12703783	291-15-364	BUILDING 291 HVAC LEGEND
331	M2.0	12703784	291-15-365	BUILDING 291 HVAC FIRST FLOOR PARTIAL PLAN AND SCHEDULE
332	M3.0	12703785	291-15-366	BUILDING 291 HVAC CONTROLS
333	M3.1	12703786	291-15-367	BUILDING 291 HVAC CONTROLS
334	M3.2	12703787	291-15-368	BUILDING 291 HVAC CONTROLS
335	E1.0	12703788	291-15-396	BUILDING 291 ELECTRICAL FIRST FLOOR PLAN
336	ET1.0	12703789	291-15-370	BUILDING 291 RF INSTALLATION DETAILS
337	H1.0	12703790	299-15-45	BUILDING 299 HAZARDOUS MATERIAL SAMPLING PLAN
338	M1.0	12703791	299-15-46	BUILDING 299 HVAC LEGEND
339	MD2.0	12703792	299-15-47	BUILDING 299 HVAC ROOF DEMO PLAN
340	M2.0	12703793	299-15-48	BUILDING 299 HVAC FIRST FLOOR PLAN AND ROOF PLAN
341	M3.0	12703794	299-15-49	BUILDING 299 HVAC CONTROLS

342	M3.1	12703795	299-15-50	BUILDING 299 HVAC CONTROLS
343	M3.2	12703796	299-15-51	BUILDING 299 HVAC CONTROLS
344	M4.0	12703797	299-15-52	BUILDING 299 HVAC SCHEDULES AND DETAILS
345	E1.0	12703798	299-15-53	BUILDING 299 ELECTRICAL LEGEND
346	ED2.0	12703799	299-15-54	BUILDING 299 ELECTRICAL ROOF DEMOLITION PLAN
347	E2.0	12703800	299-15-55	BUILDING 299 ELECTRICAL FIRST FLOOR PLAN AND ROOF PLAN
348	E3.0	12703801	299-15-56	BUILDING 299 ELECTRICAL SCHEDULES
349	ET1.0	12703802	299-15-57	BUILDING 299 RF INSTALLATION DETAILS
350	H1.0	12703803	300-15-685	BUILDING 300 HAZARDOUS MATERIAL SAMPLING PLAN
351	M1.0	12703804	300-15-686	BUILDING 300 HVAC LEGEND
352	MD2.0	12703805	300-15-687	BUILDING 300 HVAC SECOND FLOOR PARTIAL DEMO PLAN
353	M2.0	12703806	300-15-688	BUILDING 300 HVAC SECOND FLOOR AND ROOF PARTIAL PLAN
354	M3.0	12703807	300-15-689	BUILDING 300 HVAC CONTROLS
355	M3.1	12703808	300-15-690	BUILDING 300 HVAC CONTROLS
356	M3.2	12703809	300-15-691	BUILDING 300 HVAC CONTROLS
357	M4.0	12703810	300-15-692	BUILDING 300 HVAC SCHEDULES
358	E1.0	12703811	300-15-693	BUILDING 300 ELECTRICAL LEGEND
359	ED2.0	12703812	300-15-694	BUILDING 300 ELECTRICAL SECOND FLOOR PARTIAL DEMOLITION PLAN
360	E2.0	12703813	300-15-695	BUILDING 300 ELECTRICAL SECOND FLOOR PARTIAL PLAN
361	E3.0	12703814	300-15-696	BUILDING 300 ELECTRICAL SCHEDULES
362	ET1.0	12703815	300-15-697	BUILDING 300 RF INSTALLATION DETAILS
363	M1.0	12703816	301-15-173	BUILDING 301 HVAC LEGEND
364	M2.0	12703817	301-15-174	BUILDING 301 HVAC FIRST FLOOR PARTIAL PLAN AND SCHEDULE
365	M3.0	12703818	301-15-175	BUILDING 301 HVAC CONTROLS
366	M3.1	12703819	301-15-176	BUILDING 301 HVAC CONTROLS
367	M3.2	12703820	301-15-177	BUILDING 301 HVAC CONTROLS
368	E1.0	12703821	301-15-178	BUILDING 301 ELECTRICAL ELECTRICAL LEGEND, FIRST FLOOR PARTIAL PLAN AND PANELBOARD SCHEDULES

369	ET1.0	12703822	301-15-179	BUILDING 301 RF INSTALLATION DETAILS
370	H1.0	12703823	306-15-236	BUILDING 306 HAZARDOUS MATERIAL SAMPLING PLAN
371	H1.1	12703824	306-15-237	BUILDING 306 HAZARDOUS MATERIAL SAMPLING PLAN
372	H1.2	12703825	306-15-238	BUILDING 306 HAZARDOUS MATERIAL SAMPLING PLAN
373	M1.0	12703826	306-15-239	BUILDING 306 HVAC LEGEND
374	MD2.0A	12703827	306-15-240	BUILDING 306 HVAC FIRST FLOOR DEMO PLAN PART A
375	MD2.0B	12703828	306-15-241	BUILDING 306 HVAC FIRST FLOOR DEMO PLAN PART B
376	MD2.0C	12703829	306-15-242	BUILDING 306 HVAC FIRST FLOOR DEMO PLAN PART C
377	M2.0A	12703830	306-15-243	BUILDING 306 HVAC FIRST FLOOR PLAN PART A
378	M2.0B	12703831	306-15-244	BUILDING 306 HVAC FIRST FLOOR PLAN PART B
379	M2.0C	12703832	306-15-245	BUILDING 306 HVAC FIRST FLOOR PLAN PART C
380	M3.0	12703833	306-15-246	BUILDING 306 HVAC CONTROLS
381	M3.1	12703834	306-15-247	BUILDING 306 HVAC CONTROLS
382	M3.2	12703835	306-15-248	BUILDING 306 HVAC CONTROLS
383	M4.0	12703836	306-15-249	BUILDING 306 HVAC SCHEDULES AND DETAILS
384	E1.0	12703837	306-15-250	BUILDING 306 ELECTRICAL LEGEND
385	ED2.0A	12703838	306-15-251	BUILDING 306 ELECTRICAL FIRST FLOOR DEMOLITION PLAN PART A
386	ED2.0B	12703839	306-15-252	BUILDING 306 ELECTRICAL FIRST FLOOR DEMOLITION PLAN PART B
387	ED2.0C	12703840	306-15-253	BUILDING 306 ELECTRICAL FIRST FLOOR DEMOLITION PLAN PART C
388	E2.0A	12703841	306-15-254	BUILDING 306 ELECTRICAL FIRST FLOOR PLAN PART A
389	E2.0B	12703842	306-15-255	BUILDING 306 ELECTRICAL FIRST FLOOR PLAN PART B
390	E2.0C	12703843	306-15-256	BUILDING 306 ELECTRICAL FIRST FLOOR PLAN PART C
391	E4.0	12703844	306-15-257	BUILDING 306 ELECTRICAL PANELBOARD SCHEDULES
392	ET1.0	12703845	306-15-258	BUILDING 306 RF INSTALLATION DETAILS
393	H1.0	12703846	308-15-51	BUILDING 308 HAZARDOUS MATERIAL SAMPLING PLAN
394	C1.0	12703847	308-15-52	BUILDING 308 DEMOLITION PLAN
395	C2.0	12703848	308-15-53	BUILDING 308 SITE PLAN

396	M1.0	12703849	308-15-54	BUILDING 308 HVAC LEGEND
397	MD2.0	12703850	308-15-55	BUILDING 308 HVAC FIRST FLOOR DEMO PLAN
398	M2.0	12703851	308-15-56	BUILDING 308 HVAC FIRST FLOOR PLAN
399	M3.0	12703852	308-15-57	BUILDING 308 HVAC CONTROLS
400	M3.1	12703853	308-15-58	BUILDING 308 HVAC CONTROLS
401	M3.2	12703854	308-15-59	BUILDING 308 HVAC CONTROLS
402	M4.0	12703855	308-15-60	BUILDING 308 SCHEDULES AND DETAILS
403	E1.0	12703856	308-15-61	BUILDING 308 ELECTRICAL LEGEND
404	ED2.0	12703857	308-15-62	BUILDING 308 ELECTRICAL FIRST FLOOR DEMO PLAN
405	E2.0	12703858	308-15-63	BUILDING 308 ELECTRICAL FIRST FLOOR PLAN
406	E3.0	12703859	308-15-64	BUILDING 308 ELECTRICAL ONE LINE DIAGRAM MECHANICAL EQUIPEMENT SCHEDULE AND PANELBOARD SCHEDULES
407	ET1.0	12703860	308-15-65	BUILDING 308 RF INSTALLATION DETAILS
408	H1.0	12703861	315-15-45	BUILDING 315 HAZARDOUS MATERIAL SAMPLING PLAN
409	M1.0	12703862	315-15-46	BUILDING 315 HVAC LEGEND
410	MD2.0	12703863	315-15-47	BUILDING 315 HVAC FIRST FLOOR DEMO PLAN
411	MD2.1	12703864	315-15-48	BUILDING 315 HVAC SECOND FLOOR DEMO PLAN
412	M2.0	12703865	315-15-49	BUILDING 315 HVAC FIRST FLOOR PLAN
413	M2.1	12703866	315-15-50	BUILDING 315 HVAC SECOND FLOOR PLAN
414	M3.0	12703867	315-15-51	BUILDING 315 HVAC CONTROLS
415	M3.1	12703868	315-15-52	BUILDING 315 HVAC CONTROLS
416	M3.2	12703869	315-15-53	BUILDING 315 HVAC CONTROLS
417	M4.0	12703870	315-15-54	BUILDING 315 HVAC SCHEDULES, DETIALS, AND CONTROLS
418	E1.0	12703871	315-15-55	BUILDING 315 ELECTRICAL LEGEND
419	ED2.0	12703872	315-15-56	BUILDING 315 ELECTRICAL FIRST FLOOR DEMO PLAN
420	ED2.1	12703873	315-15-57	BUILDING 315 ELECTRICAL SECOND FLOOR DEMO PLAN
421	E2.0	12703874	315-15-58	BUILDING 315 ELECTRICAL FIRST FLOOR PLAN
422	E2.1	12703875	315-15-59	BUILDING 315 ELECTRICAL SECOND FLOOR PLAN

423	E3.0	12703876	315-15-60	BUILDING 315 ELECTRICAL SCHEDULES
424	ET1.0	12703877	315-15-61	BUILDING 315 RF INSTALLATION DETAILS
425	M1.0	12703878	337-15-240	BUILDING 337 HVAC LEGEND
426	MD2.0B	12703879	337-15-241	BUILDING 337 HVAC ROOF DEMO PLAN PART B
427	M2.0B	12703880	337-15-242	BUILDING 337 HVAC ROOF PLAN PART B
428	M3.0	12703881	337-15-243	BUILDING 337 HVAC CONTROLS
429	M3.1	12703882	337-15-244	BUILDING 337 HVAC CONTROLS
430	M3.2	12703883	337-15-245	BUILDING 337 HVAC CONTROLS
431	M4.0	12703884	337-15-246	BUILDING 337 HVAC SCHEDULES AND DETAILS
432	E1.0	12703885	337-15-247	BUILDING 337 ELECTRICAL LEGEND
433	ED2.0A	12703886	337-15-248	BUILDING 337 ELECTRICAL FIRST FLOOR DEMOLTION PLAN A
434	E2.0A	12703887	337-15-249	BUILDING 337 ELECTRICAL FIRST FLOOR PLAN A
435	E3.0	12703888	337-15-250	BUILDING 337 ELECTRICAL ONE LINE DIAGRAM, MECHANICAL EQUIPMENT SCHEDULE AND PANELBOARD SCHEDULES
436	ET1.0	12703889	337-15-251	BUILDING 337 RF INSTALLATION DETAILS
437	M1.0	12703890	342-15-50	BUILDING 342 HVAC LEGEND
438	MD2.0	12703891	342-15-51	BUILDING 342 HVAC FIRST FLOOR DEMO PLAN
439	M2.0	12703892	342-15-52	BUILDING 342 HVAC FIRST FLOOR PLAN
440	M3.0	12703893	342-15-53	BUILDING 342 HVAC CONTROLS
441	M3.1	12703894	342-15-54	BUILDING 342 HVAC CONTROLS
442	M3.2	12703895	342-15-55	BUILDING 342 HVAC CONTROLS
443	M4.0	12703896	342-15-56	BUILDING 342 HVAC SCHEDULES AND DETAILS
444	E1.0	12703897	342-15-57	BUILDING 342 ELECTRICAL LEGEND
445	ED2.0	12703898	342-15-58	BUILDING 342 ELECTRICAL FIRST FLOOR DEMO PLAN
446	E2.0	12703899	342-15-59	BUILDING 342 ELECTRICAL FIRST FLOOR PLAN
447	E3.0	12703900	342-15-60	BUILDING 342 ELECTRICAL SCHEDULES
448	ET1.0	12703901	342-15-61	BUILDING 342 RF INSTALLATION DETAILS
449	M1.0	12703902	343-15-336	BUILDING 343 HVAC LEGEND

450	M2.0	12703903	343-15-337	BUILDING 343 HVAC FOURTH FLOOR PARTIAL PLAN & SCHEDULE
451	M3.0	12703904	343-15-338	BUILDING 343 HVAC CONTROLS
452	M3.1	12703905	343-15-339	BUILDING 343 HVAC CONTROLS
453	M3.2	12703906	343-15-340	BUILDING 343 HVAC CONTROLS
454	E1.0	12703907	343-15-341	BUILDING 343 ELECTRICAL LEGEND, FOURTH FLOOR PARTIAL PLAN & PANELBOARD SCHEDULES
455	ET1.0	12703908	343-15-342	BUILDING 343 RF INSTALLATION DETAILS
456	M1.0	12703909	375-15-34	BUILDING 375 HVAC LEGEND
457	MD2.0	12703910	375-15-35	BUILDING 375 HVAC ROOF DEMO PLAN
458	M2.0	12703911	375-15-36	BUILDING 375 HVAC ROOF PLAN
459	M3.0	12703912	375-15-37	BUILDING 375 HVAC CONTROLS
460	M3.1	12703913	375-15-38	BUILDING 375 HVAC CONTROLS
461	M3.2	12703914	375-15-39	BUILDING 375 HVAC CONTROLS
462	M4.0	12703915	375-15-40	BUILDING 375 HVAC SCHEDULES AND DETAILS
463	E1.0	12703916	375-15-41	BUILDING 375 ELECTRICAL LEGEND
464	ED2.0	12703917	375-15-42	BUILDING 375 ELECTRICAL FIRST FLOOR DEMOLITION PLAN
465	E2.0	12703918	375-15-43	BUILDING 375 ELECTRICAL FIRST FLOOR PLAN
466	E3.0	12703919	375-15-44	BUILDING 375 ELECTRICAL SCHEDULES
467	ET1.0	12703920	375-15-44	BUILDING 375 RF INSTALLATION DETAILS
468	ET1.0	12703921	376-15-113	BUILDING 376 RF INSTALLATION DETAILS
469	M1.0	12703922	384-15-105	BUILDING 384 HVAC LEGEND
470	MD2.0	12703923	384-15-106	BUILDING 384 HVAC BASEMENT DEMO PLAN
471	M2.0	12703924	384-15-107	BUILDING 384 HVAC BASEMENT PLAN
472	M3.0	12703925	384-15-108	BUILDING 384 HVAC CONTROLS
473	M3.1	12703926	384-15-109	BUILDING 384 HVAC CONTROLS
474	M3.2	12703927	384-15-110	BUILDING 384 HVAC CONTROLS
475	M4.0	12703928	384-15-111	BUILDING 384 HVAC SCHEDULES AND DETAILS
476	E1.0	12703929	384-15-112	BUILDING 384 ELECTRICAL LEGEND

477	ED2.0	12703930	384-15-113	BUILDING 384 ELECTRICAL BASEMENT DEMOLITION FLOOR PLAN
478	E2.0	12703931	384-15-114	BUILDING 384 ELECTRCAL BASEMENT PLAN
479	E3.0	12703932	384-15-115	BUILDING 384 ELECTRICAL SCHEDULES
480	ET1.0	12703933	384-15-116	BUILDING 384 RF INSTALLATION DETAILS
481	M1.0	12703934	386-15-001	BUILDING 386 HVAC LEGEND
482	MD2.0	12703935	386-15-002	BUILDING 386 HVAC FIRST FLOOR DEMO PLAN
483	M2.0	12703936	386-15-003	BUILDING 386 HVAC FIRST FLOOR PLAN
484	M3.0	12703937	386-15-004	BUILDING 386 CONTROLS
485	M3.1	12703938	386-15-005	BUILDING 386 CONTROLS
486	M3.2	12703939	386-15-006	BUILDING 386 CONTROLS
487	M4.0	12703940	386-15-007	BUILDING 386 SCHEDULES AND DETAILS
488	E1.0	12703941	386-15-8	BUILDING 386 ELECTRICAL LEGEND
489	ED2.0	12703942	386-15-9	BUILDING 386 ELECTRICAL FIRST FLOOR DEMOLITION PLAN
490	E2.0	12703943	386-15-10	BUILDING 386 ELECTRICAL FIRST FLOOR PLAN
491	E3.0	12703944	386-15-11	BUILDING 386 PANELBOARD SCHEDULES
492	ET1.0	12703945	386-15-12	BUILDING 386 RF INSTALLATION DETAILS
493	M1.0	12703946	389-15-213	BUILDING 389 HVAC LEGEND
494	M2.0	12703947	389-15-214	BUILDING 389 HVAC FIRST FLOOR PARTIAL PLAN & SCHEDULE
495	M3.0	12703948	389-15-215	BUILDING 389 HVAC CONTROLS
496	M3.1	12703949	389-15-216	BUILDING 389 HVAC CONTROLS
497	M3.2	12703950	389-15-217	BUILDING 389 HVAC CONTROLS
498	E1.0	12703951	389-15-218	BUILDING 389 ELECTRICAL LEGEND, FIRST FLOOR PARTIAL PLAN & PANELBOARD SCHEDULE
499	ET1.0	12703952	389-15-219	BUILDING 389 RF INSTALLATION DETAILS
500	M1.0	12703953	DD1-15-787	BUILDING DD-1 HVAC LEGEND
501	M2.0	12703954	DD1-15-788	BUILDING DD-1 HVAC FIRST FLOOR PLAN & SCHEDULE
502	M3.0	12703955	DD1-15-789	BUILDING DD-1 HVAC CONTROLS
503	M3.1	12703956	DD1-15-790	BUILDING DD-1 HVAC CONTROLS

504	M3.2	12703957	DD1-15-791	BUILDING DD-1 HVAC CONTROLS
505	E1.0	12703958	DD1-15-792	BUILDING DD-1 DRY DOCK ELECTRICAL LEGEND, FIRST FLOOR PLAN AND PANELBOARD SCHEDULE
506	ET1.0	12703959	DD1-15-793	BUILDING DD-1 RF INSTALLATION DETAILS

-- End of Document --

SECTION 01 11 00

SUMMARY OF WORK
08/11

PART 1 GENERAL

1.1 REFERENCES

The publications listed below form a part of this specification to the extent referenced. The publications are referred to within the text by the basic designation only.

ASTM INTERNATIONAL (ASTM)

ASTM E2114	(2008) Standard Terminology for Sustainability Relative to the Performance of Buildings

1.2 DEFINITIONS

Definitions pertaining to sustainable development are as defined in ASTM E2114, Section 01 57 19.00 20 TEMPORARY ENVIRONMENTAL CONTROLS, and as specified.

a. "Environmentally preferable products" have a lesser or reduced effect on the environment in comparison to conventional products and services. This comparison may consider raw materials acquisition, production, manufacturing, packaging, distribution, reuse, operation, maintenance, or disposal of the product.

b. "Indoor environmental quality" is the physical characteristics of the building interior that impact occupants, including air quality, illumination, acoustics, occupant control, thermal comfort, daylighting, and views.

c. "Operational performance" is the functional behavior of the building as a whole or of the building components.

d. "Sustainability" is the balance of environmental, economic, and societal considerations.

1.3 SUBMITTALS

Government approval is required for submittals with a "G" designation; submittals not having a "G" designation are for Contractor Quality Control approval. Submit the following in accordance with Section 01 33 00 SUBMITTAL PROCEDURES:

1.4 WORK COVERED BY CONTRACT DOCUMENTS

1.4.1 Project Description

The work includes replacing inefficient R-22 refrigerant equipment with modern equipment containing R-410a refrigerant with a lower ozone

depletion potential, in accordance with the Clean Air Act. Buildings within the scope of this project without existing Direct Digital Control (DDC) systems will have new systems installed to monitor and control HVAC equipment. Those buildings with existing controls will be upgraded for integration with the new controls system. The buildings will be integrated into an Industrial Control System (ICS) for remote monitoring and control in the Public Works Shop, Building 043.

1.4.2 Location

The work shall be located in buildings 014, 018, 022, 027, 029, 031, 044, 059, 060, 079, 086, 096, 099, 153, 156, 170, 238, 291, 299, 300, 301, 306, 308, 315, 337, 342, 343, 375, 384, 386, 389, and DD1, approximately as indicated. The exact location will be shown by the Contracting Officer.

1.5 PROJECT ENVIRONMENTAL GOALS

Contractor shall distribute copies of the Environmental Goals to each subcontractor and the Contracting Officer. The overall goal for design, construction, and operation is to produce a building that meets the functional program needs and incorporates the principles of sustainability. Specifically:

a. Preserve and restore the site ecosystem and biodiversity; avoid site degradation and erosion. Minimize offsite environmental impact.

b. Use the minimum amount of energy, water, and materials feasible to meet the design intent. Select energy and water efficient equipment and strategies.

c. Use environmentally preferable products and decrease toxicity level of materials used.

d. Use renewable energy and material resources.

e. Optimize operational performance (through commissioning efforts) in order to ensure energy efficient equipment operates as intended. Consider the durability, maintainability, and flexibility of building systems.

f. Manage construction site and storage of materials to ensure no negative impact on the indoor environmental quality of the building.

g. Reduce construction waste through reuse, recycling, and supplier take-back.

1.5.1 Independent Verification

1.6 OCCUPANCY OF PREMISES

Building(s) will be occupied during performance of work under this Contract.

Before work is started, the Contractor shall arrange with the Contracting Officer a sequence of procedure, means of access, space for storage of materials and equipment, and use of approaches, corridors, and stairways.

1.7 EXISTING WORK

In addition to "FAR 52.236-9, Protection of Existing Vegetation, Structures, Equipment, Utilities, and Improvements":

a. Remove or alter existing work in such a manner as to prevent injury or damage to any portions of the existing work which remain.

b. Repair or replace portions of existing work which have been altered during construction operations to match existing or adjoining work, as approved by the Contracting Officer. At the completion of operations, existing work shall be in a condition equal to or better than that which existed before new work started.

1.8 Navy and Marine Corps (NMCI) Coordination Requirements

1.8.1 NMCI Contractor Access

The NMCI Contractor must be allowed access to the facility towards the end of construction (finishes 90 percent complete, rough-in 100 percent complete, Inside Plant (ISP)/Outside Plant (OSP) infrastructure in place) to provide equipment in the telecommunications rooms and make final connections. Coordinate efforts with the NMCI contractor to facilitate joint use of building spaces during the final phases of construction. After the Contracting Officer has facilitated coordination meetings between the two contractors, the construction contractor must, within one week, incorporate the effort of additional contractor coordination into construction schedule to demonstrate plan for maintaining the contract duration.

1.9 SALVAGE MATERIAL AND EQUIPMENT

Items designated by the Contracting Officer to be salvaged shall remain the property of the Government.

The salvaged property shall be segregated, itemized, delivered, and off-loaded at the Government designated storage area./

Contractor shall maintain property control records for material or equipment designated as salvage. Contractor's system of property control may be used if approved by the Contracting Officer. Contractor shall be responsible for storage and protection of salvaged materials and equipment until disposition by the Contracting Officer.

PART 2 PRODUCTS

Not used.

PART 3 EXECUTION

Not used.

-- End of Section --

SECTION 01 14 00.00 22

WORK RESTRICTIONS (PWD ME) ALL PROJECTS
12/14

PART 1 GENERAL

This specification applies to all Design-Bid-Build and Design-Build projects.

1.1 REFERENCES

The publications listed below form a part of this specification to the extent referenced. The publications are referred to within the text by the basic designation only.

NATIONAL FIRE PROTECTION ASSOCIATION (NFPA)

NFPA 241	(2009) Standard for Safeguarding Construction, Alteration, and Demolition Operations

U.S. ARMY CORPS OF ENGINEERS (USACE)

EM 385-1-1	(2008; Errata 1-2010; Changes 1-3 2010; Changes 4-6 2011; Change 7 2012) Safety and Health Requirements Manual

1.2 SUBMITTALS

Government approval is required for submittals with a "G" designation; submittals not having a "G" designation are for Contractor Quality Control approval. Submit the following in accordance with Section 01 33 00 SUBMITTAL PROCEDURES for Design-Bid-Build projects:

SD-01 Preconstruction Submittals

List of Contact Personnel; G

1.3 SPECIAL SCHEDULING REQUIREMENTS (PNSY)

a. The facility will remain in operation during the entire construction period. The Contractor shall conduct his/her operations so as to cause the least possible interference with normal operations of the Portsmouth Naval Shipyard.

b. Permission to interrupt any Portsmouth Naval Shipyard roads, railroads, and/or utility services shall be submitted to the Contracting Officer in writing a minimum of 15 calendar days prior to the desired date of interruption.

c. The project is located in and adjacent to security islands. The Contractor is not allowed in these areas without continuous Government escorts. Areas are as indicated on the Plans.

e. Coordinate the work with the sequencing/phasing requirements outlined in Section 01 11 00 SUMMARY OF WORK.

1.4 CONTRACTOR ACCESS AND USE OF PREMISES (PNSY)

Deliveries to Portsmouth Naval Shipyard are limited to 13 foot widths. Notify the Contracting Officer 30 days in advance for any wide loads exceeding 13 feet. The Contractor shall contact the Contracting Officer to determine if there are other access limitations at the Portsmouth Naval Shipyard.

Ensure that Contractor personnel employed on the Portsmouth Naval Shipyard become familiar with and obey Portsmouth Naval Shipyard regulations. Keep within the limits of the work and avenues of ingress and egress. Do not enter restricted areas unless required to do so and until cleared for such entry.

All Contractors' equipment shall be conspicuously marked for identification.

1.5 CONTRACTOR ACCESS AND USE OF PREMISES (AOR)

Ensure that Contractor personnel employed on the Activity become familiar with and obey Activity regulations. Keep within the limits of the work and avenues of ingress and egress. Do not enter restricted areas unless required to do so and until cleared for such entry.

All Contractors' equipment shall be conspicuously marked for identification.

1.5.1 Subcontractors and Personnel Contacts

Furnish a list of contact personnel of the Contractor and subcontractors including addresses and telephone numbers for use in the event of an emergency. As changes occur and additional information becomes available, correct and change the information contained in previous lists.

1.5.2 Identification Badges and Installation Access

a. Application for and use of badges will be as directed. Obtain access to the installation by participating in the Navy Commercial Access Control System (NCACS) or by obtaining passes each day from the Station's Pass and Identification/Security Office.

   Costs for obtaining passes through the NCACS are the responsibility of the Contractor. One-day passes, issued through the Station's Pass and Identification Office, will be furnished without charge. Furnish a completed EMPLOYMENT ELIGIBILITY VERIFICATION (DHS FORM I-9) form for all personnel requesting badges. This form is available at http://www.uscis.gov/portal/site/uscis by searching or selecting Employment Verification Form I-9. Report any instances of lost or stolen badges to the Contracting Officer immediately.

b. NCACS Program: NCACS is a voluntary program in which Contractor personnel who enroll, and are approved, are subsequently granted access to the installation for a period up to one year, or the length of the contract, whichever is less, and are not required to obtain a new pass from the Station Pass and Identification Office for each visit. The Government performs background screening and credentialing. Throughout the year the Contractor employee must continue to meet background screening standards. Periodic background

screenings are conducted to verify continued NCACS participation and installation access privileges. Under the NCACS program, no commercial vehicle inspection is required, other than for Random Anti-Terrorism Measures (RAM) or in the case of an elevation of Force Protection Conditions (FPCON).

Information on costs and requirements to participate and enroll in NCACS is available at:

http://www.rapidgate.com/vendors/how-to-enroll

Or by calling 1-877-727-4342. Contractors should be aware that the costs incurred to obtain NCACS credentials, or costs related to any means of access to a Navy Installation, are not reimbursable. Any time invested, or price(s) paid, for obtaining NCACS credentials will not be compensated in any way or approved as a direct cost of any contract with the Department of the Navy.

c. All Contractors who possess a Navy Commercial Access Control (NCAC) System Card are required to present a second form of valid ID to the Gate Sentry, if requested, upon arrival at the Installation's Entrance Gate.

All Contractor personnel without CAC cards will need two forms of approved identification for access to the Installation.

See Attachment A for the list of acceptable identification documents.

d. One-Day Passes: Participation in the NCACS is not mandatory, and if the Contractor chooses to not participate, the Contractor's personnel will have to obtain daily passes, be subject to daily mandatory vehicle inspection, and will have limited access to the installation. The Government will not be responsible for any cost or lost time associated with obtaining daily passes or added vehicle inspections incurred by non-participants in the NCACS.

1.6 STATION REGULATIONS

1.6.1 Radiological

1.6.1.1 Radiological Indoctrination (PNSY)

All Contractors working at the Portsmouth Naval Shipyard are required to view a 15 minute video briefing on radiological postings and controls in use at the Portsmouth Naval Shipyard. The briefing will be given at the Pass Office prior to issue of security badges and vehicle passes.

Any Contractor employee, who disregards, alters, moves, or otherwise tampers with a radiological posting, or who disobeys a radiological instruction, may be removed from the Portsmouth Naval Shipyard and denied future access.

1.6.1.2 Yellow Materials (PNSY)

Contractors working at the Portsmouth Naval Shipyard shall not use yellow or orange-yellow colored materials for the following purposes: Protective clothing, hoods, sheeting, tarpaulins, polyethylene bottles or other containers, tapes, bags, banding, identification marks on tools, boundary markers, ribbons, vent ducts, temporary erosion control devices, survey

ribbon, etc. The Contractor shall contact the Contracting Officer for a list of yellow items that have been approved for use on the Shipyard. Contractor generated yellow colored waste shall be disposed of by the Contractor off-yard. Shipyard refuse containers shall not be used for disposal of yellow colored waste materials. Yellow colored items such as described above are of special significance within the Shipyard and are subject to strict controls. Yellow colored contract generated debris shall be bagged in non-translucent containers, and promptly removed from Portsmouth Naval Shipyard.

1.6.1.3 Smoke Detectors (PNSY)

Ionization type smoke detectors and duct smoke detectors contain radioactive material and are prohibited from use on the Portsmouth Naval Shipyard. Photoelectric smoke detectors are the only type authorized for use on the Shipyard.

1.6.1.4 Radioactive Sources (PNSY)

All contracts involving radiation generating devices shall conform to the requirements listed in Section 01 35 26.00 22 GOVERNMENTAL SAFETY REQUIREMENTS (PWD ME) and U.S. Army Corps of Engineers Safety Manual EM 385-1-1. All requirements are to be submitted to the Contracting Officer at least 14 days prior to commencement of operations involving radiation generating devices. A requirements checklist will be provided by NAVFAC (COTs) Contractor Oversight Technician and also available on PWD Maine website:

https://www.navfac.navy.mil/navfac_worldwide/atlantic/fecs/mid-atlantic/pwd_maine/about_us/construction.html

1.6.2 Laser Control

Contractor shall comply with laser safety requirements under 21 CFR 1040 and ANSI 2136.1-1986 for any work under this contract utilizing lasers.

1.6.3 Energy Conservation

In cooperation with Government representatives, the Contractor shall participate in an active program directed toward the efficient use of energy. Government furnished utilities will not be provided for air conditioning of Contractor trailers or office areas.

1.6.4 Fire Prevention (PNSY)

Contractor shall familiarize and require all their employees to become familiar with fire prevention regulations within the Portsmouth Naval Shipyard to include the proper method of turning in a fire alarm, storage of flammable and combustible materials and control of combustible waste and trash. Any HOT WORK (welding, burning, grinding, cutting, etc.) requires a HOT WORK PERMIT prior to commencing such work. This permit is obtained from the Portsmouth Naval Shipyard's Fire Department via the Contracting Officer.

1.6.5 Identification and Control of Seamed (Welded) Pipe and Tubing (PNSY)

Submarine Safety regulations prohibit the use of seamed (welded) pipe or tubing within the Portsmouth Naval Shipyard, unless such pipe or tubing is identified and controlled so as to prevent its inadvertent substitution

for seamless pipe or tubing. The following requirements apply and will be strictly enforced:

Any seamed (welded) copper-nickel, carbon steel, carbon-moly steel, stainless steel, nickel-chromium-iron alloy, or nickel-copper pipe or tubing the Contractor intends to use on the Shipyard shall be identified in the following manner PRIOR TO DELIVERY TO THE SHIPYARD:

Use a lead-free white paint, to mark a 24-inch long stripe and the word "welded" alternately along the entire length of the pipe or tubing. Apply a one-half inch wide stripe unless the size of the pipe or tubing requires use of a narrower stripe.

Contractor shall maintain positive control over seamed pipe or tubing until worked into place or removed from the Shipyard.

Seamless pipe or tubing may be substituted for any seamed (welded) pipe or tubing specified in the technical specifications.

The above requirements do not apply to square or rectangular tubing, copper or brass pipe or tubing, they also do not apply to piping or tubing which has been incorporated into equipment or fixtures prior to delivery to the Shipyard.

1.6.6 Pesticide and Herbicide Control

Contractor shall not apply pesticides nor herbicides unless specifically required by this contract. Where application of pesticides or herbicides is required, provide the submittals required by the specification and obtain written approval prior to any application. Contracting Officer will require review and approval of pesticides or herbicides submittals.

1.6.7 Smoking Policy

In accordance with NAVFAC policy, smoking is prohibited inside all buildings and other facilities except those areas specifically identified as smoking areas (e.g., smoking shelters). Smoking is not permitted within 20 feet of air intakes, doorways or windows.

1.6.8 Portal Crane Clearance Zone (PNSY)

The Contractor shall ensure there is no construction debris or materials within the Crane Clearance Zone (i.e., between the painted yellow lines on each side of the rail) unless a rail outage has been approved.

1.7 WORKING HOURS (PNSY)

Regular working hours shall consist of a period established by the Contracting Officer between 7 AM and 3:30 PM, Monday through Friday, excluding Government holidays. The regular working hours shall be confirmed with the Contracting Officer.

1.7.1 Work Outside Regular Hours (PNSY)

Work outside regular working hours requires Contracting Officer approval. Provide written requests fifteen (15) Calendar days prior to such work to allow arrangements to be made by the Government for inspecting the work in progress and to allow scheduling of full time escorts in the building(s) if required. During periods of darkness, the different parts of the work

shall be lighted in a manner approved by the Contracting Officer.

Contractors that utilize NCACs are responsible to coordinate for the correct access times with the Contracting Officer and the RAPID Gate Operations Center. If a contractors attempts access outside of their approved times, access to the Shipyard will be denied.

1.8 WORK IN OCCUPIED BUILDING(S)

Work under this contract may be located in an occupied building. Move unfixed furniture away from Contractor's working area as required to perform the work; protect; and replace in original locations upon completion of the work. Leave fixed equipment in place and protect against damage or temporarily disconnect, relocate, protect, and reinstall at completion of work. If determined necessary by the Contracting Officer, the Government will remove and relocate other Government property in the areas of the buildings scheduled to receive work. Allow 15 calendar days after written notification from the Contractor for the Government to relocate Government property.

1.9 UTILITY CUTOVERS AND INTERRUPTIONS

Make utility cutovers and interruptions after normal working hours or on Saturdays, Sundays, and Government holidays as approved by the Contracting Officer. Conform to procedures required in the paragraph "Work Outside Regular Hours." Anticipated costs shall be included in the bid.

Ensure that new utility lines are complete, except for the connection, before interrupting existing service.

Interruption to Water, Sanitary Sewer, Storm Sewer, Telephone Service, Electric Service, Air Conditioning, Heating, Fire Alarm, Compressed Air, and other utilities shall be considered utility cutovers pursuant to the paragraph entitled "Work Outside Regular Hours." This time limit includes time for deactivation and reactivation.

Operation of Station Utilities: The Contractor shall not operate nor disturb the setting of control devices in the Station's utilities system, including water, sewer, electrical, and steam services. The Government will operate the control devices as required for normal conduct of the work. The Contractor shall notify the Contracting Officer in writing within 15 calendar days when such operation is required depending on the utility.

1.10 WORK ADJACENT TO CIA SECURITY FENCING (PNSY)

Work adjacent to Portsmouth Naval Shipyard Controlled Industrial Area (CIA) fencing is strictly controlled to ensure security is maintained at all times.

Work which will breach CIA fencing is prohibited unless approval has been obtained from Head of Security Operations (Code 1720) and a Shipyard Police representative is at the worksite during the period that the fence has been breached.

A minimum of 30 calendar days prior to performing work which requires breaching the CIA security fence, arrange through the Contracting Officer to obtain Head of Security Operations approval and scheduling of the Shipyard Police representative. "Breaching the fence" is any repair,

alteration, or other work which would allow access into the CIA either over, under, or through an opening in a CIA fence.

Conditions which breach the fence shall be eliminated during all non-work periods to the satisfaction of the Shipyard Police representative. Contractor shall not leave the worksite until such conditions are eliminated. All materials used to close openings in fencing and method of installation shall be the same type and construction as adjacent, undisturbed CIA fencing.

Except for temporary off-loading of materials, the 10-foot zone adjacent to CIA fencing shall remain clear of vehicles, materials, and equipment. Contractor personnel shall be at the site throughout the entire time of any off-loading.

1.11 FIRE PROTECTION

1.11.1 Compliance (PNSY)

The Contractor shall comply with COE EM 385-1-1, NFPA 241, NAVSHIPYD PTSMH INST 11320.6 (latest revision Fire Safety Manual and NAVSHIPYD PTSMH INST 11300.9 (Latest revision) for work at the Portsmouth Naval Shipyard, Utility and Facility Outages, and Portsmouth Naval Shipyard fire regulations. Obtain approval from the Portsmouth Naval Shipyard Fire Chief via the Contracting Officer prior to commencement of hot work operations.

1.11.2 Notification of Fire (PNSY)

Post the Portsmouth Naval Shipyard fire poster in conspicuous locations and at telephones in construction shacks.

1.12 SECURITY REQUIREMENTS

1.12.1 General

Contractor employees and representatives performing work under this contract are required to be United States citizens. If naturalized, the individual shall present his naturalization papers to the Security Officer for inspection. Foreign born personnel shall present evidence of citizenship regardless of citizenship of parents, as required by immigration laws.

1.12.2 Access to the Portsmouth Naval Shipyard (PNSY)

Contract Clause "FAR 52.204-2, Security Requirements and Alternate II" and the following apply:

Access to areas designated as "Red Badge" will require the Contractor to be escorted by a "Red Badged" Government Representative. The Contractor shall notify the Contracting Officer at least 14 Calendar Days in advance of the date access is required.

Obtain security badges and vehicle passes to enter the Portsmouth Naval Shipyard at the Portsmouth Naval Shipyard's Pass/Security Office. Contractor must furnish proof that employees are U.S. citizens to obtain badges to enter the Portsmouth Naval Shipyard.

Contractor must have a completed Department of Homeland Security Form I-9;

Employment Eligibility Verification for each employee and furnish proof that employees are U.S. citizens to obtain badges to enter Portsmouth Naval Shipyard.

1.12.3 Application and Issue of Security Badges

"Temporary" Security Badges will be issued to Contractor personnel requiring access for less than two (2) work days upon satisfactory proof of U.S. citizenship, in the form of an original or certified birth certificate, passport, or naturalization papers. A picture ID is required in addition to satisfactory proof of citizenship.

"Permanent" (photo) Standard Access Control Badges will be issued to Contractor personnel requiring access for two (2) or more work days. Contractor personnel will be required to complete an authorization application form for local record check, and a personal information sheet. The forms will be furnished to the Contractor following award of any contract resulting from this solicitation, at time of pre-performance or pre-construction conference.

In the event the Contractor requires access to contract work areas not permitted by the level of security badge issued, such need shall be demonstrated and an escort obtained. The escort shall remain visible to the Contractor at all times within areas requiring escort.

STANDARD ACCESS CONTROL BADGES SHALL BE ATTACHED TO THE OUTER GARMENT AND DISPLAYED AT ALL TIMES WHILE ON THE STATION.

CONTRACTOR PERSONNEL SHALL NOT ENTER AREAS FOR WHICH THEY HAVE NOT BEEN CLEARED. WHERE A NEED HAS BEEN DEMONSTRATED TO ENTER SUCH AREAS, CONTRACTOR SHALL BE UNDER CONSTANT ESCORT BY PERSONNEL WHO HAVE BEEN CLEARED. FAILURE TO ADHERE TO POSTED SECURITY REQUIREMENTS MAY RESULT IN REMOVAL OF THE EMPLOYEE FROM THE STATION WITH FUTURE ACCESS DENIED.

1.12.4 Application and Issue of Vehicle Passes (PNSY)

Vehicle passes will be issued upon satisfactory proof of a valid Operator's License, Vehicle Insurance, and State Vehicle Registration. Temporary passes will be issued for short term or single trip requirements on a case by case basis. All vehicles permitted to enter or park on the Portsmouth Naval Shipyard shall comply with the Portsmouth Naval Shipyard's traffic and parking regulations and shall only park in assigned areas, which may or may not be in the vicinity of the site of the contract work. No vehicle shall be parked in such a manner that crane tracks, railroad tracks, and vehicle access routes are blocked. Vehicles left unattended which are blocking such access routes are subject to towing and loss of vehicle passes. Parking on the Portsmouth Naval Shipyard may be in excess of one-half mile from the worksite.

1.12.5 Return of Badges and Vehicle Passes

Contractor shall ensure all vehicle access permits and personnel badges are returned to the Security Officer when the need has ended. Contractor shall account in writing for each missing pass or badge prior to final payment being made on the contract.

1.12.6 Contractor Security Responsibilities (PNSY)

Contractor employees shall not transport, drink, or have in their

possession any alcoholic beverages. Possession of any controlled substances without a physician's prescription is also prohibited. Any Contractor employee appearing to be under the influence of intoxicating liquor or narcotics will be apprehended by Shipyard Police, escorted off of the Portsmouth Naval Shipyard, and turned over to the local Police Department.

Any vehicle found to contain controlled substances, including usable residue, may be seized and impounded. Within 24 hours of the work day following any vehicle seizure, the Portsmouth Naval Shipyard Police will have determined whether forfeiture of the vehicle is required. If not, the vehicle will be returned to the owner or authorized agent. If the vehicle is determined to be appropriate for forfeiture, the Portsmouth Naval Shipyard's Legal Officer will notify the Drug Enforcement Administration of such seizure and impoundment, for initiation of forfeiture proceedings pursuant to Title 2l, U.S. Code, Section 88l. Such actions may be taken regardless of whether the owner/operator of the vehicle had knowledge of the presence of drugs in the vehicle. The Government may pursue criminal or other disciplinary actions pursuant to Title l8, U.S. Code, Section l382.

Possession of firearms, ammunition and/or explosives is prohibited. In the event explosives are required for construction work, specific handling requirements and approvals shall be obtained from the Security Officer via the Contracting Officer.

Cameras, video equipment, or similar photographic equipment shall not be introduced into nor removed from the Portsmouth Naval Shipyard. In the event such equipment is required for performance of contract work, approvals shall be obtained from the Security Officer via the Contracting Officer.

Weapons (firearms, personal knives with blades 2-1/2 inch long or greater, Mace, Pepper Spray etc.) are not permitted aboard the Shipyard.

Cell phones equipped with cameras are permitted aboard the Portsmouth Naval Shipyard outside NAVSEA controlled spaces such as the CIA, but using them to take pictures is not allowed. Cameras, or cell phones equipped with cameras, are not allowed in the CIA or in any NAVSEA space such as an NWA, CNIA or Security Island.

Laptop computers shall not be introduced into nor removed from the Portsmouth Naval Shipyard. If laptop computers are required to perform work, obtain approvals from the Security Officer via the Contracting Officer.

Driver use of a hand-held cellular phone in a moving vehicle on the Portsmouth Naval Shipyard is prohibited. This prohibition does not include hands-free cellular phone devices. Hands-free devices include console/dash-mounted or otherwise secured cellular phones with integrated features such as voice-activation, speed dial, speakerphone or other similar technology for sending and receiving calls.

Driver use of any portable, personal listening device worn inside the aural canal, around or covering the driver's ear while operating a motor vehicle, is prohibited. Listening devices include wired or wireless earphones and headphones (including blue tooth or similar technology), and do not include hearing aids or devices designed and required for hearing protection.

The use of radar or laser detection devices to indicate the presence of speed recording instruments or to transmit simulated erroneous speeds is prohibited in accordance with OPNAVINST 5100.2H.

The Contractor shall indoctrinate personnel on access limitations to ensure security control is maintained as an integral part of their work pattern and habit.

Contractor shall indoctrinate his/her personnel on escorting procedures and responsibilities. Contractor personnel acting as escorts for other Contractor personnel assume full responsibility for their actions. Escorts shall be within sight of the persons being escorted at all times.

Contractor is advised that any unescorted personnel found in security areas requiring a higher level clearance than the level represented by the badge displayed will be removed from the area with possible confiscation of security badges and vehicle passes.

1.13 CONSTRUCTION VEHICLES

The Contractor shall not utilize any vehicle that will exceed an HS20 wheel load. The use of "off road" vehicles which cannot be legally operated on State roadways or highways is prohibited.

PART 2 PRODUCTS

Not used.

PART 3 EXECUTION

Not used.

-- End of Section --

ATTACHMENT A

LISTS OF ACCEPTABLE DOCUMENTS

All documents must be unexpired

LIST A Documents that Establish Both Identity and Employment Authorization	OR	LIST B Documents that Establish Identity	AND	LIST C Documents that Establish Employment Authorization
1. U.S. Passport or U.S. Passport Card		1. Driver's license or ID card issued by a State or outlying possession of the United States provided it contains a photograph or information such as name, date of birth, gender, height, eye color, and address		1. Social Security Account Number card other than one that specifies on the face that the issuance of the card does not authorize employment in the United States
2. Permanent Resident Card or Alien Registration Receipt Card (Form I-551)				2. Certification of Birth Abroad issued by the Department of State (Form FS-545)
3. Foreign passport that contains a temporary I-551 stamp or temporary I-551 printed notation on a machine-readable immigrant visa		2. ID card issued by federal, state or local government agencies or entities, provided it contains a photograph or information such as name, date of birth, gender, height, eye color, and address		3. Certification of Report of Birth issued by the Department of State (Form DS-1350)
4. Employment Authorization Document that contains a photograph (Form I-766)		3. School ID card with a photograph		
		4. Voter's registration card		4. Original or certified copy of birth certificate issued by a State, county, municipal authority, or territory of the United States bearing an official seal
5. In the case of a nonimmigrant alien authorized to work for a specific employer incident to status, a foreign passport with Form I-94 or Form I-94A bearing the same name as the passport and containing an endorsement of the alien's nonimmigrant status, as long as the period of endorsement has not yet expired and the proposed employment is not in conflict with any restrictions or limitations identified on the form		5. U.S. Military card or draft record		
		6. Military dependent's ID card		
		7. U.S. Coast Guard Merchant Mariner Card		5. Native American tribal document
		8. Native American tribal document		6. U.S. Citizen ID Card (Form I-197)
		9. Driver's license issued by a Canadian government authority		
		For persons under age 18 who are unable to present a document listed above:		7. Identification Card for Use of Resident Citizen in the United States (Form I-179)
6. Passport from the Federated States of Micronesia (FSM) or the Republic of the Marshall Islands (RMI) with Form I-94 or Form I-94A indicating nonimmigrant admission under the Compact of Free Association Between the United States and the FSM or RMI		10. School record or report card		8. Employment authorization document issued by the Department of Homeland Security
		11. Clinic, doctor, or hospital record		
		12. Day-care or nursery school record		

Illustrations of many of these documents appear in Part 8 of the Handbook for Employers (M-274)

SECTION 01 20 00.00 20

PRICE AND PAYMENT PROCEDURES (PWD ME) DESIGN-BID-BUILD PROJECTS
12/14

PART 1 GENERAL

This specification applies to only Design-Bid-Build projects.

1.1 REFERENCES

The publications listed below form a part of this specification to the extent referenced. The publications are referred to within the text by the basic designation only.

U.S. ARMY CORPS OF ENGINEERS (USACE)

EP-1110-1-8	(2009) Construction Equipment Ownership and Operating Expense Schedule

1.2 SUBMITTALS

Government approval is required for submittals with a "G" designation; submittals not having a "G" designation are for Contractor Quality Control approval. Submit the following in accordance with Section 01 33 00 SUBMITTAL PROCEDURES for Design-Bid-Build projects:

SD-01 Preconstruction Submittals

Schedule of Prices; G

1.3 SCHEDULE OF PRICES

All progress payment amounts will be derived from and tied to the cost loaded schedule activities per Section 01 32 17.00 25 NETWORK ANALYSIS SCHEDULES (NAS) (PWD ME).

1.3.1 Data Required

Within 15 calendar days of notice of award, prepare and deliver to the Contracting Officer a Schedule of Prices (construction contract) as directed by the Contracting Officer. Provide a detailed breakdown of the contract price, giving quantities for each of the various kinds of work, unit prices, and extended prices. Provide labor, material, equipment for each line item. Costs shall be summarized and totals provided for each construction category.

1.3.2 Schedule Instructions

Payments will not be made until the Schedule of Prices has been submitted to and accepted by the Contracting Officer. Identify the cost for site work, and include incidental work to the 5 ft. line. Identify costs for the building(s), and include work out to the 5 ft. line. Work out to the 5 ft. line shall include construction encompassed within a theoretical line 5 ft. from the face of exterior walls and shall include attendant construction, such as pad mounted HVAC cooling equipment, cooling towers, and transformers placed beyond the 5 ft. line.

1.3.3 Real Property Assets

The Government will provide the Draft DD Form 1354, Transfer and Acceptance of Military Real Property filled in with the appropriate Real Property Unique Identifiers (RPUID) and related construction Category Codes to summarize the designed real property assets that apply to this contract. The Contractor shall meet with the Contracting Officer and the Real Property Accounting Officer during the Pre-Construction Meeting and the Project Closeout Meetings to modify and include any necessary changes to the DD Form 1354. The Contractor shall provide the Interim DD Form 1354 that uses the appropriate division of the RPUIDs/Category Codes to represent the final constructed facility and include all associated cost. Coordinate the Contractor's Price and Payment structure with the structure of the RPUIDs/Category Codes.

Divide detailed asset breakdown into the RPUIDs and related construction Category Codes and populate associated costs which represent all aspects of the work. Where assets diverge into multiple RPUID/Category Codes, divide the asset and provide the proportion of the assets in each RPUID/Category Code. Assets and related RPUID/Category Codes may be modified by the Contracting Officer as necessary during course of the work. Coordinate identification and proportion of these assets with the Government Real Property Accounting Officer.

Cost data accumulated under this section are required in the preparation of DD Form 1354.

1.3.4 Schedule Requirements for HVAC TAB

The field work of Section 23 05 93 TESTING, ADJUSTING, AND BALANCING FOR HVAC shall be broken down in the Schedule of Prices and in the Construction Progress Documentation by separate line items which reflect measurable deliverables. Specific payment percentages for each line item shall be determined on a case by case basis for each contract. The line items shall be as follows:

a. Approval of Design Review Report: The TABS Agency is required to conduct a review of the project plans and specifications to identify any feature, or the lack thereof, that would preclude successful testing and balancing of the project HVAC systems. The resulting findings shall be submitted to the Government to allow correction of the design. The progress payment shall be issued after review and approval of the report.

b. Approval of the pre-field engineering report: The TABS Agency submits a report which outlines the scope of field work. The report shall contain details of what systems will be tested, procedures to be used, sample report forms for reporting test results and a quality control checklist of work items that must be completed before TABS field work commences.

c. Season I field work: Incremental payments are issued as the TABS field work progresses. The TABS Agency mobilizes to the project site and executes the field work as outlined in the pre-field engineering report. The HVAC water and air systems are balanced and operational data shall be collected for one seasonal condition (either summer or winter depending on project timing).

d. Approval of Season I report: On completion of the Season I field work; the data is compiled into a report and submitted to the Government. The report is reviewed, and approved, after ensuring compliance with the pre-field engineering report scope of work.

e. Completion of Season I field QA check: Contract QC and Government representatives meet the TABS Agency at the jobsite to retest portions of the systems reported in the Season I report. The purpose of these tests is to validate the accuracy and completeness of the previously submitted Season I report.

f. Approval of Season II report: The TABS Agency completes all Season II field work, which is normally comprised mainly of taking heat transfer temperature readings, in the season opposite of that under which Season I performance data was compiled. This data shall be compiled into a report and submitted to the Government. On completion of submittal review to ensure compliance with the pre-field engineering report scope, progress payment is issued. Progress payment is less than that issued for the Season I report since most of the water and air balancing work effort is completed under Season I.

1.4 CONTRACT MODIFICATIONS

In conjunction with the Contract Clause "DFARS 252.236-7000, Modification Proposals-Price Breakdown," and where actual ownership and operating costs of construction equipment cannot be determined from Contractor accounting records, equipment use rates shall be based upon the applicable provisions of the EP-1110-1-8.

1.5 CONTRACTOR'S INVOICE AND CONTRACT PERFORMANCE STATEMENT

1.5.1 Content of Invoice

Requests for payment will be processed in accordance with the Contract Clause FAR 52.232-27, Prompt Payment Construction Contracts and FAR 52.232-5, Payments Under Fixed-Price Construction Contracts. The requests for payment shall include the documents listed below.

a. The Contractor's invoice, on NAVFAC Form 7300/30 furnished by the Government, showing in summary form, the basis for arriving at the amount of the invoice. Form 7300/30 shall include certification by Quality Control (QC) Manager as required by the contract.

b. The Estimate for Voucher/ Contract Performance Statement on NAVFAC Form 7300/31 furnished by the Government, showing in detail: the estimated cost, percentage of completion, and value of completed performance for each of the construction categories stated in this contract. Use NAVFAC LANT Form 4-330/110 (New 7/84) on NAVFAC LANT contracts when a Monthly Estimate for Voucher is required.

c. Updated Project Schedule and reports required by the contract.

d. Contractor Safety Self Evaluation Checklist.

e. Other supporting documents as requested.

f. Updated copy of submittal register.

g. Invoices not completed in accordance with contract requirements will

be returned to the Contractor for correction of the deficiencies.

h. Contractor's Monthly Estimate for Voucher (NAVFAC LANT Form 4-330/110 (New 7/84)) with Subcontractor and supplier payment certification.

i. Affidavit to accompany invoice (NAVFAC LANT NORVA Form 4-4235/4 (Rev.5/81)).

j. Materials on Site.

k. Monthly Work-hour report.

l. Solid Waste Disposal Report.

1.5.2 Submission of Invoices

If NFAS Clause 5252.232-9301 is included in the contract, the documents listed in paragraph "CONTENT OF INVOICE" shall be provided in their entirety as attachments in Wide Area Work Flow (WAWF) for each invoice submitted. The maximum size of each WAWF attachment is two megabytes, but there are no limits on the number of attachments. If a document cannot be attached in WAWF due to system or size restriction it shall be provided as instructed by the Contracting Officer.

Monthly invoices and supporting forms for work performed through the anniversary award date of the contract shall be submitted to the Contracting Officer within 5 calendar days of the date of invoice. For example, contract award date is the 7th of the month, the date of each monthly invoice shall be the 7th and the invoice shall be submitted by the 12th of the month.

1.5.3 Final Invoice

a. A final invoice shall be accompanied by the Contractor's Final Release. If the Contractor is incorporated, the Final Release shall contain the corporate seal. An officer of the corporation shall sign and the corporate secretary shall certify the Final Release.

b. For final invoices being submitted via WAWF, the original Contractor's Final Release Form must be provided directly to the respective Contracting Officer prior to submission of the final invoice. Once receipt of the original Final Release Form has been confirmed by the Contracting Officer, the Contractor shall then submit final invoice and attach a copy of the Final Release Form in WAWF.

c. Final invoices not accompanied by the Contractor's Final Release will be considered incomplete and will be returned to the Contractor.

1.6 PAYMENTS TO THE CONTRACTOR

Payments will be made on submission of itemized requests by the Contractor which comply with the requirements of this section, and will be subject to reduction for overpayments or increase for underpayments made on previous payments to the Contractor.

1.6.1 Obligation of Government Payments

The obligation of the Government to make payments required under the provisions of this contract will, at the discretion of the Contracting

Officer, be subject to reductions and/or suspensions permitted under the FAR and agency regulations including the following in accordance with "FAR 32.503-6:

a. Reasonable deductions due to defects in material or workmanship;

b. Claims which the Government may have against the Contractor under or in connection with this contract;

c. Unless otherwise adjusted, repayment to the Government upon demand for overpayments made to the Contractor; and

d. Failure to provide up to date record drawings not current as stated in Contract Clause "FAC 5252.236-9310, Record Drawings."

1.6.2 Payment for Onsite and Offsite Materials

Progress payments may be made to the contractor for materials delivered on the site, for materials stored off construction sites, or materials that are in transit to the construction sites under the following conditions:

a. FAR 52.232-5(b) Payments Under Fixed Price Construction Contracts.

b. Materials delivered on the site but not installed, including completed preparatory work, and off-site materials to be considered for progress payment shall be major high cost, long lead, special order, or specialty items, not susceptible to deterioration or physical damage in storage or in transit to the construction site. Examples of materials acceptable for payment consideration include, but are not limited to, structural steel, non-magnetic steel, non-magnetic aggregate, equipment, machinery, large pipe and fittings, precast/pre-stressed concrete products, plastic lumber (e.g., fender piles/curbs), and high-voltage electrical cable. Materials not acceptable for payment include consumable materials such as nails, fasteners, conduits; gypsum board, glass, insulation, and wall coverings.

c. Materials to be considered for progress payment prior to installation shall be specifically and separately identified in the Contractor's estimates of work submitted for the Contracting Officer's approval in accordance with Schedule of Prices requirement of this contract. Requests for progress payment consideration for such items shall be supported by documents establishing their value and that the title requirements of the clause at FAR 52.232-5 have been met.

d. Materials are adequately insured and protected from theft and exposure.

e. Provide a written consent from the surety company with each payment request for offsite materials.

PART 2 PRODUCTS

Not used.

PART 3 EXECUTION

Not used.

-- End of Section --

SECTION 01 30 00

ADMINISTRATIVE REQUIREMENTS
11/11

PART 1 GENERAL

1.1 SUBMITTALS

Government approval is required for submittals with a "G" designation; submittals not having a "G" designation are for Contractor Quality Control approval. Submit the following in accordance with Section 01 33 00 SUBMITTAL PROCEDURES for Design-Bid-Build projects:

SD-01 Preconstruction Submittals

View location map; G

Progress and completion pictures; G

1.2 VIEW LOCATION MAP

Submit to the Contracting Officer, prior to or with the first digital photograph submittals, a sketch or drawing indicating the required photographic locations. Update as required if the locations are moved.

1.3 PROGRESS AND COMPLETION PICTURES

Photographically document site conditions prior to start of construction operations. Provide monthly, and within one month of the completion of work, digital photographs, 1600x1200x24 bit true color RGB minimum resolution in JPEG file format showing the sequence and progress of work. Take a minimum of 20 digital photographs each week throughout the entire project from a minimum of ten views from points located by the Contracting Officer. Submit a view location sketch indicating points of view. Submit with the monthly invoice two sets of digital photographs each set on a separate CD-R, cumulative of all photos to date. Indicate photographs demonstrating environmental procedures. Photographs for each month shall be in a separate monthly directory and each file shall be named to indicate its location on the view location sketch. The view location sketch shall also be provided on the CD as digital file. All file names shall include a date designator. Cross reference submittals in the appropriate daily report. Photographs shall be provided for unrestricted use by the Government.

1.4 MINIMUM INSURANCE REQUIREMENTS

Procure and maintain during the entire period of performance under this contract the following minimum insurance coverage:

a. Comprehensive general liability: $500,000 per occurrence

b. Automobile liability: $200,000 per person, $500,000 per occurrence for bodily injury, $20,000 per occurrence for property damage

c. Workmen's compensation as required by Federal and State workers' compensation and occupational disease laws.

d. Employer's liability coverage of $100,000, except in States where workers compensation may not be written by private carriers,

e. Others as required by State law.

1.5 CONTRACTOR SPECIAL REQUIREMENTS

1.5.1 Asbestos Containing Material

All contract requirements of Section 02 82 16.00 20, "Engineering Control of Asbestos Containing Materials" assigned to the Private Qualified Person (PQP) shall be accomplished directly by a first tier subcontractor.

1.5.2 Space Temperature Control, HVAC TAB, and Apparatus Inspection

All contract requirements of Section 23 05 93 TESTING, ADJUSTING AND BALANCING FOR HVAC shall be accomplished directly by a first tier subcontractor, including the Commissioning Agent. No work required by Section 23 05 93 or shall be accomplished by a second tier subcontractor.

1.6 SUPERVISION

Have at least one qualified supervisor capable of reading, writing, and conversing fluently in the English language on the job site during working hours. In addition, if a Quality Control (QC) representative is required on the contract, then that individual shall also have fluent English communication skills.

1.7 PRECONSTRUCTION CONFERENCE

After award of the contract but prior to commencement of any work at the site, meet with the Contracting Officer to discuss and develop a mutual understanding relative to the administration of the value engineering and safety program, preparation of the schedule of prices or earned value report, shop drawings, and other submittals, scheduling programming, prosecution of the work, and clear expectations of the "Interim DD Form 1354" Submittal. Major subcontractors who will engage in the work shall also attend.

1.8 FACILITY TURNOVER PLANNING MEETINGS (NAVFAC Red Zone - NRZ)

Key personnel will meet to identify strategies to ensure the project is carried to expeditious closure and turnover to the Client. Start the turnover process at the Pre Construction Conference meeting and convene at the Facility Turnover Meetings once the project has reached approximately 75 percent completion or three to six months prior to Beneficial Occupancy Date (BOD), whichever comes first. The Contracting Officer's Representative will lead the meetings and guide discussions based on an agenda provided by the Government. The facility Turnover effort shall include the following:

a. Pre Construction Meeting - Contracting Officer's Technical Representative (COTR) will provide the NRZ Checklist and the Contractor, Client, and NAVFAC Representatives will compare Contractor's schedule to NRZ Checklist items.

b. Facility Turnover Meetings

1. Fill in the NRZ Checklist including Contractor, Client, and NAVFAC Checklist Items and assign a person responsible for each item and a due date. The Contractor's Representative will facilitate the assignment of responsibilities, fill out the NRZ Checklist, and discuss "Interim DD Form 1354" requirements.

2. Review the Contractor's updated schedule. The Contractor shall develop a POAM for the completion of all Contractor, Client, and NAVFAC Checklist items.

3. Confirm that all NRZ Checklist items will be completed on time for the scheduled Facility Turnover.

1.9 PARTNERING

To most effectively accomplish this contract, the Government requires the formation of a cohesive partnership within the Project Team whose members are from the Government, the Contractor and their Subcontractors. Key personnel from the Supported Command, the End User (who will occupy the facility), NAVFAC (Echelon III and IV), the Navy Region/Installation, the Contractor and Subcontractors, and the Designer of Record will be invited to participate in the Partnering process. The Partnership will draw on the strength of each organization in an effort to achieve a project that is without any safety mishaps, conforms to the Contract, and stays within budget and on schedule.

The Contracting Officer will provide Information on the Partnering Process and a list of key and optional personnel who should attend the Partnering meeting.

1.9.1 Informal Partnering

The Contracting Officer will organize the Partnering Sessions with key personnel of the project team, including Contractor personnel and Government personnel.

The Initial Partnering session should be a part of the Pre-Construction Meeting. Partnering sessions will be held at a location agreed to by the Contracting Officer and the Contractor (typically a conference room provided by the PWD FEAD/ROICC office or the Contractor).

The Initial Informal Partnering Session will be conducted and facilitated using electronic media (a video and accompanying forms) provided by the Contracting Officer.

The Partners will determine the frequency of the follow-on sessions.

1.10 AVAILABILITY OF CADD DRAWING FILES

After award and upon request, the electronic "Computer-Aided Drafting and Design (CADD)" drawing files will only be made available to the Contractor for use in preparation of construction data related to the referenced contract subject to the following terms and conditions. Request specific drawing numbers of files required; the entire set of drawing files will not be provided.

Data contained on these electronic files shall not be used for any purpose other than as a convenience in the preparation of construction data for

the referenced project. Any other use or reuse shall be at the sole risk of the Contractor and without liability or legal exposure to the Government. The Contractor shall make no claim and waives to the fullest extent permitted by law, any claim or cause of action of any nature against the Government, its agents or sub consultants that may arise out of or in connection with the use of these electronic files. The Contractor shall, to the fullest extent permitted by law, indemnify and hold the Government harmless against all damages, liabilities or costs, including reasonable attorney's fees and defense costs, arising out of or resulting from the use of these electronic files.

These electronic CADD drawing files are not construction documents. Differences may exist between the CADD files and the corresponding construction documents. The Government makes no representation regarding the accuracy or completeness of the electronic CADD files, nor does it make representation to the compatibility of these files with the Contractors hardware or software. In the event that a conflict arises between the signed and sealed construction documents prepared by the Government and the furnished CADD files, the signed and sealed construction documents shall govern. The Contractor is responsible for determining if any conflict exists. Use of these CADD files does not relieve the Contractor of duty to fully comply with the contract documents, including and without limitation, the need to check, confirm and coordinate the work of all contractors for the project.

If the Contractor uses, duplicates and/or modifies these electronic CADD files for use in producing construction drawings and data related to this contract, all previous indicia of ownership (seals, logos, signatures, initials and dates) shall be removed.

1.11 ELECTRONIC MAIL (E-MAIL) ADDRESS

The Contractor shall establish and maintain electronic mail (e-mail) capability along with the capability to open various electronic attachments in Microsoft, Adobe Acrobat, and other similar formats. Within 10 days after contract award, the Contractor shall provide the Contracting Officer a single (only one) e-mail address for electronic communications from the Contracting Officer related to this contract including, but not limited to contract documents, invoice information, request for proposals, and other correspondence. The Contracting Officer may also use email to notify the Contractor of base access conditions when emergency conditions warrant, such as hurricanes, terrorist threats, etc. Multiple email address will not be allowed.

It is the Contractor's responsibility to make timely distribution of all Contracting Officer initiated e-mail with its own organization including field office(s). The Contractor shall promptly notify the Contracting Officer, in writing, of any changes to this email address.

PART 2 PRODUCTS

Not Used

PART 3 EXECUTION

Not Used

-- End of Section --

01 30 00 APPENDIX A

NAVFAC Red Zone
Facility Turnover Planning Meeting

AGENDA

I. Introduction and Overview – Purpose CM

The purpose of the Facility Turnover Planning Meeting is to address elements within the project team's purview – schedule management, assure completed facility complies with contract requirements, and other contractual issues. Each member of the project delivery team (Client, NAVFAC, and the contractor) has critical responsibilities to ensure timely completion and turnover of the new facility and each member should execute the NRZ process to achieve this end. The NRZ process provides a final re-focusing of attention to details of those key elements critical for a successful construction contract completion. In implementing NRZ processes, the NAVFAC/Contractor/Client team take a collective "snapshot" of contract status, identifying remaining actions to be accomplished, and confirm required resources needed for successful contract completion and turnover to the Client.

The Facility Turnover Planning Meeting is a collaborative effort between the Client, NAVFAC, and the contractor and results in a completed "NRZ Checklist/POAM Items" list that identifies the major items (and their due dates) that must be completed by the Contractor, the Client and the NAVFAC team to ensure timely completion of the contract.

II. Attendees

NAVFAC Echelon IV (PM); NAVFAC FEAD/ROICC Team (AROICC, CM, ET/QA, Contracting Officer); Client Team (Project Manager, Program Coordinator, User/Tenant); Contractor Team (Project Manager, Project Superintendent, CQC Manager)

III. Schedule to Completion (POAM)	Contractor
IV. Schedule of Final Outfitting and Occupancy (POAM)	Client
V. Critical feature(s) of project (POAM)	CM
VI. Transfer of Maintenance Responsibility	CM
VII. Systems training & O&M Manuals (POAM)	CQC Manager
VIII. Other Items to include on NRZ checklists	All
IX. Summary of Required Actions and Responsibility	CM

Guidelines for conducting Facility Turnover Planning Meeting are as follows:

a. Meeting is held at approximately 75% construction contract completion or three to six months prior to BOD. NAVFAC representatives will include the Project Manager, Construction Manager/AROICC (CM) and Design Manager (DM), as appropriate. The contractor representatives include applicable prime contractor staff and decision-makers from major subcontractors. Design-Build contractors will have A-E representatives attending. The Client should include representatives from Public Works Officer (PWO) staff, a Client scope and financial decision maker, a user tenant representative, a facility start-up person, and others such as SPAWAR, NMCI, telephone, and furniture contractor, etc.

b. The purpose of the meeting is to plan the remaining work, identify critical project features that still need to be completed (such as "soft" construction contract requirements as shown on the NRZ Checklist/POAM Items), and to complete the filling out of the "NRZ Checklist/POAM Items".

c. The contractor, client and NAVFAC provide a POC and due date for each item on their checklist. The team fills in the checklists by selecting items applicable to the project, selects due dates on each item, and appoints a person who has responsibility to ensure the item gets completed by the due date. The CM will be responsible to monitor the milestones.

NRZ Checklist/POAM Items

The table below provides typical NRZ checklist items for contractor, Client, and NAVFAC actions. Items listed on the checklists are required to remain on the checklists if they are part of the project/contract or required by construction convention. Items not listed on the checklists, but required in the contract or by construction convention, must be added to the checklists by the contractor, Client and NAVFAC. Checklists are applicable to all contracts no matter what Category of Work.

The Point of Contact and due date shall initially be determined during the Facility Turnover Planning Meeting by the NAVFAC, client and contractor leads. During execution of the NRZ process, for each item on the entire list, the Construction Manager (CM) shall indicate date completed and initial to indicate completion of the item. If a party fails to complete an item by the due date, this should be noted on the checklist and new due date established and indicated. The completed NRZ Checklist/POAM shall be placed in the contract file.

Resp.	Checklist Items	Point of Contact	Due Date	Actual Complete Date	CM Initials	Notes
Client	Telephone service contract					
Client	Utilities service contract					
Client	Custodial service contract					
Client	Coordination of Intrusion Detection Systems and Physical Security Equipment					
Client	Coordination of IT and Communication Infrastructure and Devices					
Client	Delivery and installation of client furnished equipment					
Client	Delivery and installation of client furnished furniture					
Client	GFE status/delivery schedule (GFCI, GFGI)					
Client	Installation of communications for phones and computers					
Client	Modification to FSC or BOSC to maintain/service new facility					
Client	NMCI Installations or other networks					
Client	Process operating permits					i.e. generators
Client	Recycled/recovered materials report					

Client	Ribbon-cutting ceremony					
Client	User move-in					
Contractor	ACATS Controls Testing					
Contractor	Communications / IT Systems Testing					
Contractor	Conduct Second Seasons TAB					
Contractor	Coordination and Delivery of Facility Signage					
Contractor	Delivery of As-Built Drawings					
Contractor	Delivery of Internal Services Requirement List					60 days prior to BOD
Contractor	Delivery of O&M Manuals					
Contractor	Delivery of Spare Parts, Extra Stock, Special Tools, etc.					
Contractor	Duct Air Leakage Testing					
Contractor	Electrical Systems Testing					
Contractor	Elevator Certification(s)					
Contractor	EV Notebook submitted (Spec Sec Temp EV Controls - SWPP etc.)					

Contractor	Final Cleaning					
Contractor	Demob					
Contractor	Final Inspection and Acceptance					
Contractor	Final utility systems connections (power, water, etc.)					
Contractor	Fire Protection Systems Inspections and Performance Verification					
Contractor	HVAC System Test & Balance					
Contractor	Landscaping Complete					
Contractor	Notice of Termination (EV Permits)					
Contractor	O&M/OMSI Training of Navy Personnel					
Contractor	Other Specified Building Performance Requirements					i.e. leed
Contractor	Plumbing / Other Mechanical Testing					
Contractor	Pre-Final Inspection					
Contractor	Pre-warranty Conference					
Contractor	Project Close-out Meeting					

Contractor	Provide Interim DD1354					
Contractor	Punch List Completion					
Contractor	Replace Construction Lock Cores and Re-keying					
Contractor	Security Systems Testing					
Contractor	Site Restoration, if applicable					
Contractor	Specialized Equipment & Systems Inspections (Boilers, UPS, etc.)					
Contractor	Superchlorination of potable water systems					
NAVFAC	A-E and Construction Contractor Evaluations (ACASS/CCASS)					
NAVFAC	Client walk-thru prior to pre-final inspections, if appropriate					
NAVFAC	Closeout actions on construction permits (e.g., NPDES)					
NAVFAC	Complete Installed Property List and DD 1354					
NAVFAC	Confirm utilities availability for final connections by contractor					
NAVFAC	Mechanical Acceptance					
NAVFAC	Process final payment (w/ final release)					

NAVFAC	Process recycled/recovered materials report					
NAVFAC	Provide keying plan to contractor					
NAVFAC	Resolve contract modifications & requests for equitable adjustment					
NAVFAC	Return unobligated funds					
NAVFAC	Schedule client satisfaction post BOD follow-up					
NAVFAC	Schedule Government inspections of specialized equipment (e.g., Boiler/pressure vessels, elevators, UPS,					
NAVFAC	Sign & provide Interim DD1354 to activity Real Property Accountability Officer NLT BOD					
NAVFAC	Startup utilities					

NAVFAC PWD Maine Follow-on Services List

Fire Suppression Requirements

		Features						Fire Pumps		Other Systems			
SHOPS / FSC Action	Location (BLDG-FLR-RM)	Wet	Dry	Pre Activation	Deluge	D-Drip	Air Compressor	Diesel	Electric	Gas	Wet Chemical	Dry Chemical	Foam

HVAC

SHOPS / FSC Action	Location (BLDG-FLR-RM)	Equipment Description	Manufacturer	Model Number	Serial Number	Tonnage/HP	# of Filters	Size of Filters	Belt Specs	Refrigerant

Boilers

SHOPS / FSC Action	Location (BLDG-FLR-RM)	Number of Boilers	Manufacturer	Model	MBH	Fuel	Certification Expiration	National Board Number

Back Flow Preventers

SHOPS / FSC Action	Location (BLDG-FLR-RM)	Unique Number	Manufacturer	Model Number	Serial Number	Size (1", 3" etc.)	Type of Back Flow (BLDG FEED, Heat Make up etc.	Frequency
								Annual

Generator

SHOPS / FSC Action	Location (BLDG-FLR-RM)	Manufacturer	Model number	Serial Number	KW	HP	Fuel Type

Water Coolers

SHOPS / FSC Action	Location (BLDG-FLR-RM)	Building Description	EA	Floor	Outlet Location	Outlet #	Outlet Type (floor/wall mount)	Manufacturer	Model #	Serial Number	Filter Model Number

Gutters & Downspouts

SHOPS / FSC Action	Location (BLDG-FLR-RM)	Material	Gutter Size 6" etc.	LF above 30'	LF below 30'	# of Drops	Downspout Size 4" etc.	LF above 30'	LF below 30'	#of Roof Drains

Overhead Doors

SHOPS / FSC Action	Location (BLDG-FLR-RM)	Door Number	Width	Height	Manufacturer	Type (U-M RMP)	Condition

Elevator

SHOPS / FSC Action	Location (BLDG-FLR-RM)	Speed (FPM)	Capacity (lbs.)	Manufacturer	MFG Date	Type (FE/H)

Lightning Protection

SHOPS / FSC Action	Location (BLDG-FLR-RM)	*Attach drawing of system

Emergency Lighting

SHOPS / FSC Action	Location (BLDG-FLR-RM)	Number of Emergency Lights

Janitorial/Waste

SHOPS / FSC Action	Location (BLDG-FLR-RM)	Square Footage of Room	Use (Admin/ Bathroom etc.)	# of anticipated occupants

*Attach CAD file of building
* Attach Finish Schedule

Electrical Distribution Equipment

SHOPS / FSC Action	Location (BLDG-FLR-RM)	Type (CC OIL DRY etc.)	USS or PAD	Manufacturer	Serial Number	Rating

NAVFAC PWD Maine Follow-on Services List

Refuse/ Waste				
SHOPS / FSC Action	Location (BLDG-FLR-RM)	Type of Dumpster	Number Required	Placement Location

Pest Control			
SHOPS / FSC Action	Location (BLDG-FLR-RM)	Total SQFT of Building	Food Service/Child Care/ or Medical Space SQFT

Grounds			
SHOPS / FSC Action	Total SQFT of Grounds Maint Req	Mowing (Y/N)	Tree Trimming (Y/N)
Production			

Storm Water Management Soil Filters, Ponds, etc.			
SHOPS / FSC Action			

Miscellaneous Maintainable Items (e.g. Oil and Water Separators)			
SHOPS / FSC Action			

SECTION 01 32 16.00 20

CONSTRUCTION PROGRESS DOCUMENTATION
11/09

PART 1 GENERAL

1.1 SUBMITTALS

Government approval is required for submittals with a "G" designation; submittals not having a "G" designation are for Contractor Quality Control approval. Submit the following in accordance with Section 01 33 00 SUBMITTAL PROCEDURES for Design-Bid-Build projects:

SD-01 Preconstruction Submittals

Construction schedule; G

1.2 ACCEPTANCE

Prior to the start of work, prepare and submit to the Contracting Officer for acceptance a construction schedule in the form of a Network Analysis Schedule (NAS) in accordance with the terms in Contract Clause "FAR 52.236-15, Schedules for Construction Contracts," except as modified in this contract. Acceptance of an error free Baseline Schedule and updates is a condition precedent to processing the Contractor's pay request.

1.3 SCHEDULE FORMAT

1.3.1 Network Analysis Schedule (NAS)

The Contractor shall use the critical path method (CPM) to schedule and control project activities. Project schedules shall be prepared and maintained using Primavera P3, Primavera SureTrak or current mandated scheduling program. Save files in Concentric P3 or current mandated scheduling program file format, compatible with the Governments version of the scheduling program. Importing data into P3/SureTrak/current mandated scheduling program using data conversion techniques or third party software will be cause for rejection of the submitted schedule. The schedule shall be built as follows:

The Project Schedule shall show submittals, government review periods, material/equipment delivery, utility outages, all on-site construction, inspection, testing, and closeout activities. Government and Contractor on-site work activities shall be driven by calendars that reflect Saturdays, Sundays and all Federal Holidays as non-work days.

With the exception of the Contract Award and End Contract milestone activities, no activities shall be open-ended; each activity shall have predecessor and successor ties.

Each activity shall be assigned its appropriate Responsibility Code indicating responsibility to accomplish the work indicated by the activity, Phase Code and Work Location Code.

Date/time constraint(s) and/or lags, other than those required by the contract, shall not be allowed unless accepted by the Contracting Officer.

The Contractor shall include as the last activity in the contract schedule, a milestone activity named "Contract Completion Date". The "Contract Completion Date" milestone shall have a "Mandatory Finish" constraint equal to the contract completion date.

1.3.1.1 NAS Submittals and Procedures

Submit all network analysis and updates in hard copy and on electronic media that is acceptable to the Contracting Officer. Submit an electronic back-up of the project schedule in an import format compatible with the governments scheduling program.

1.4 UPDATED SCHEDULES

Update the Construction schedule at monthly intervals or when the schedule has been revised. The updated schedule shall be kept current, reflecting actual activity progress and plan for completing the remaining work. Submit copies of purchase orders and confirmation of delivery dates as directed.

1.5 3-WEEK LOOK AHEAD SCHEDULE

The Contractor shall prepare and issue a 3-Week Look Ahead schedule to provide a more detailed day-to-day plan of upcoming work identified on the Construction Schedule. The work plans shall be keyed to activity numbers when a NAS is required and updated each week to show the planned work for the current and following two-week period. Additionally, include upcoming outages, closures, preparatory meetings, and initial meetings. Identify critical path activities on the Three-Week Look Ahead Schedule. The detail work plans are to be bar chart type schedules, maintained separately from the Construction Schedule on an electronic spreadsheet program and printed on 8 ½ by 11 sheets as directed by the Contracting Officer. Activities shall not exceed 5 working days in duration and have sufficient level of detail to assign crews, tools and equipment required to complete the work. Three hard copies and one electronic file of the 3-Week Look Ahead Schedule shall be delivered to the Contracting Officer no later than 8 a.m. each Monday and reviewed during the weekly CQC Coordination Meeting.

1.6 CORRESPONDENCE AND TEST REPORTS:

All correspondence (e.g., letters, Requests for Information (RFIs), e-mails, meeting minute items, Production and QC Daily Reports, material delivery tickets, photographs, etc.) shall reference Schedule activities that are being addressed. All test reports (e.g., concrete, soil compaction, weld, pressure, etc.) shall reference schedule activities that are being addressed.

PART 2 PRODUCTS

Not used.

PART 3 EXECUTION

Not used.

-- End of Section --

SECTION 01 32 17.00 25

NETWORK ANALYSIS SCHEDULES (NAS) (PWD ME)
12/14

PART 1 GENERAL

1.1 DESCRIPTION

The Contractor is responsible for scheduling procurement, Contractor quality control and construction, acceptance testing and training. Refer to Specification Section 01 33 00 SUBMITTAL PROCEDURES to determine if any items require Government approval prior to construction; if any are required, that submittal review time shall be included in the schedule.

The schedule is a tool to manage the project, both for Contractor and Government activities. It will also be used to report progress and evaluate time extensions. All progress payment amounts will be derived from and tied to the cost loaded schedule activities.

The Contractor shall use the Critical Path Method (CPM) and the Precedence Diagram Method (PDM) to satisfy time and cost applications. For consistency, when scheduling software terminology is used in this specification, the terms in Primavera's scheduling programs are used.

Include commissioning milestone per LEED NC Prerequisite EAp2 - Fundamental Commission and Credit EAc3 - Enhanced Commissioning, if commissioning is included in the contract.

1.2 SUBMITTALS

Government approval is required for submittals with a "G" designation; submittals not having a "G" designation are for Contractor Quality Control approval. Submit the following in accordance with Section 01 33 00 SUBMITTAL PROCEDURES:

SD-01 Preconstruction Submittals

Qualifications; G

Baseline Network Analysis Schedule (NAS); G

SD-07 Certificates

Monthly Network Analysis Schedule Update; G

SD-11 Closeout Submittals

As-Built Schedule; G

1.3 SCHEDULE ACCEPTANCE PRIOR TO START OF WORK

The Contracting Officer and Contractor shall participate in a preliminary meeting(s) to discuss the proposed schedule and requirements of this section prior to the Contractor preparing the Project Baseline Schedule.

Government review comments on the Contractor's schedule(s) shall not

relieve the Contractor from compliance with requirements of the Contract Documents.

Only bonds shall be paid prior to acceptance of the Baseline Network Analysis Schedule (NAS).

The acceptance of a Baseline NAS is a condition precedent to:

1. The Contractor starting work on the demolition or construction stage(s) of the contract.

2. Processing Contractor's pay request(s) for construction activities/items of work.

3. Review of any schedule updates.

Submittal of the Baseline Network Analysis Schedule, and subsequent schedule updates, shall be understood to be the Contractor's certification that the submitted schedule meets all of the requirements of the Contract Documents, represents the Contractor's plan on how the work shall be accomplished, and accurately reflects the work that has been accomplished and how it was sequenced (as-built logic).

1.4 SOFTWARE

Project schedules must be prepared and maintained using Primavera P6. Importing data into P6 using data conversion techniques or third party software will be cause for rejection of the submitted schedule.

A listing of Primavera P6 settings and parameters which shall be used in preparing the Baseline Schedule is contained later in this specification section. See Attachment A. Deviation from these settings and parameters, without prior consent of the Contracting Officer, will be cause for rejection of schedule submission.

1.5 QUALIFICATIONS

The designated Scheduler for the project shall have prepared and maintained at least 3 previous schedules of similar size and complexity of this contract using SureTrak/P6 or current mandated scheduling program. A resume outlining the qualifications of the Scheduler shall be submitted for acceptance to the Contracting Officer. Payment will not be processed until an acceptable Scheduler is provided.

1.6 NETWORK SYSTEM FORMAT

The system shall include time scaled logic diagrams and specified reports.

1.6.1 Diagrams

Provide Time-scaled Logic Diagram printed in color on ANSI D size sheets. The diagram shall clearly show activities on the critical path. Include the following information for each activity:

a. Activity ID

b. Activity Description

c. Original Duration in Work Days

d. Remaining duration

e. Percent Complete

f. Late Start Date

g. Late Finish Date

h. Total Float

1.6.2 Schedule Activity Properties and Level of Detail

The NAS shall identify all Government, Construction Quality Management (CQM), Construction activities planned for the project and all other activities that could impact project completion if delayed. Separate activities shall be created for each Phase, Area, Floor Level and Location the activity is occurring. Activity categories included in the schedule are specified below.

With the exception of the Contract Award and Contract Completion Date (CCD) milestone activities, no activity shall be open-ended; each activity shall have predecessor and successor ties. Once an activity exists on the schedule it may not be deleted or renamed to change the scope of the activity and shall not be removed from the schedule logic without approval from the Contracting Officer. The ID number for a deleted activity shall not be re-used for another activity. No more than 20 percent of the activities shall be critical or near critical. Critical is defined as having zero days of Total Float. "Near Critical" is defined as having Total Float of 1 to 14 days. Contractor activities shall be driven by calendars that reflect Saturdays, Sundays and all Federal Holidays as non-work days.

1.6.2.1 Activity Categories

a. Procurement Activities: Examples of procurement activities include, but are not limited to; Material/equipment submittal preparation, submittal and approval of material/equipment; material/equipment fabrication and delivery, and material/equipment on-site. As minimum, separate procurement activities will be provided for critical items, long lead items, items requiring Government approval and material/equipment procurement for which payment will be requested in advance of installation. The Contractor shall show each delivery with relationship tie to the Construction Activity specifically for the delivery.

b. Government Activities: Government and other agency activities that could impact progress shall be clearly identified. Government activities include, but are not limited to; Government approved submittal reviews, Government conducted inspections/tests, environmental permit approvals by State regulators, utility outages, Design Start, Construction Start, (including Design/Construction Start for each Fast-Track Phase), Notice(s) to proceed and delivery of Government Furnished Material/Equipment.

c. Quality Management (QM) Activities: CQM Activities shall identify the Preparatory Phase and Initial Phase for each Definable Feature of Work identified in the Contractor's Quality Control Plan. These activities shall be added to each Three-Week Look Ahead Schedule referenced in

the paragraph entitled "THREE-WEEK LOOK AHEAD SCHEDULE" and will also be included in each monthly update. The Follow-up Phase will be represented by the Construction Activities in the Baseline Schedule and in the schedule updates.

d. Construction Activities: No on-site construction activity shall have a duration exceeding 20 working days. Separate construction activities shall be created for each Phase, Area, Floor Level and Location the activity is occurring. Contractor activities will be driven by calendars that reflect Saturdays, Sundays and all Federal Holidays as non-work days, unless otherwise defined in this contract.

e. Turnover and Closeout Activities: Include a separate section with all items on the NAVFAC Red Zone Checklist/Plan of Action and Milestones (POAM) that are applicable to this project. The checklist will be provided at the Preconstruction Meeting. As a minimum, this will include all testing, specialized inspection activities, Pre-Final inspection, Punch List Completion, Final Inspection and Acceptance. Add a milestone for the Facility Turnover Planning Meeting at approximately 75 percent construction contract completion or three to six months prior to BOD, whichever is sooner.

1.6.2.2 Contract Milestones and Constraints

a. Project Start Date Milestones: The Contractor shall include as the first activity on the schedule a start milestone titled "Contract Award", which shall have a Mandatory Start constraint equal to the Contract Award Date.

b. Projected Completion Milestone: The Contractor shall include an unconstrained finish milestone on the schedule titled "Projected Completion". Projected Completion is defined as the point in time the Government would consider the project complete and ready for its intended use. This milestone shall have the Contract Completion (CCD) milestone as its only successor.

c. Contract Completion Date (CCD) Milestone: The Contractor shall include as the last activity on the schedule a finish milestone titled "Contract Completion (CCD)", which shall have a Mandatory Finish constraint equal to the current Contract Completion Date. Calculation of schedule updates shall be such that if the finish of the "Projected Completion" milestone falls after the contract completion date, then negative float will be calculated on the longest path and if the finish of the "Projected Completion" milestone falls before the contract completion date, the float calculation shall reflect positive float on the longest path. The only predecessor to the Contract Completion Date Milestone shall be the Projected Completion milestone.

1.6.2.3 Activity Code

At a minimum, the Contractor shall establish activity codes identified in this specification and 3 additional activity codes identified by the Contracting Officer. Once established, activity codes and values cannot be changed without approval by the Contracting Officer.

a. Phase: All activities shall be assigned a 4-digit code value based on the contract phase it occurs in.

b. Area Code: All activities shall be assigned an area code value

identifying the Area in which the activity occurs. Activities shall not belong to more than one area. Area is defined as a distinct space, function or activity category; such as, separate structure(s), site work, project summary, construction quality management, material/equipment procurement, etc.

c. Work Item: All activities in the project schedule shall be assigned a 4-digit Work Item code value. Examples of Work Item code values include but are not limited to water lines, drain lines, building pad and foundation, slab on grade, walls and columns, suspended slab, roof structure, roofing, exterior finish systems, interior rough-in, and finishes, etc.

d. Location 1: Assign a 4-digit Location 1 code value to activities associated with multistory structures. Code values are used to identify the floor level where an activity is occurring.

e. Location 2: Assign a 4-digit Location 2 code value to all activities to identify the location within an Area, Work Item or Building Level that an activity is occurring.

f. Responsibility Code: All activities in the project schedule shall be identified with the party responsible for completing the task. Activities shall not belong to more than one responsible party.

1.6.2.4 Anticipated Weather Delays

The Contractor shall use the National Oceanic and Atmospheric Administration's (NOAA) historical monthly averages for the NOAA location closest to the project site or the following schedule of anticipated monthly non-work days due to adverse weather for projects located at Portsmouth Naval Shipyard as the basis for establishing a "Weather Calendar" showing the number of anticipated non-workdays for each month due to adverse weather, Saturdays, Sundays and all Federal Holidays as non-work days.

MONTHLY ANTICIPATED ADVERSE WEATHER DELAYS - PNSY											
JAN	FEB	MAR	APR	MAY	JUN	JUL	AUG	SEP	OCT	NOV	DEC
3	4	3	3	1	1	2	1	2	2	3	2

Assign the Weather Calendar to any activity that could be impacted by adverse weather. The Contracting Officer will issue a modification in accordance with the contract clauses, giving the Contractor a time extension for the difference of days between the anticipated and actual adverse weather delay if the number of actual adverse weather delay days exceeds the number of days anticipated for the month in which the delay occurs and the adverse weather delayed activities critical to contract completion. A lost workday due to weather conditions is defined as a day in which the Contractor cannot work at least 50 percent of the day on the impacted activity.

1.6.2.5 Anticipated Security Delays

The contractor shall allow in the schedule a total of 5 lost workdays per calendar year for instances where base access is not permitted due to a

security related closure which causes a delay in the work. A lost workday is defined as a day in which the Contractor cannot work at least 50 percent of the day on the closed installation. If the installation is closed for a period longer than 5 workdays per calendar year, the Contracting Officer will issue a no cost contract modification as applicable in accordance with the contract clauses extending the contract completion date where the critical path has been impacted.

1.6.2.6 Cost Loading

a. Cost Loading Activities: Material and Equipment Costs for which payment will be requested in advance of installation shall be assigned to their respective procurement activity (i.e., the material/equipment on-site activity). Cost for material/equipment paid for after installation, labor and construction equipment shall be assigned to their respective Construction Activities. The value of inspection/testing activities will not be less than 10 percent of the total costs for Procurement and Construction Activities. Evenly disperse overhead and profit to each activity over the duration of the project.

b. Quantities and Units of Measure: Each cost loaded activity shall have a detailed quantity breakdown and unit of measure.

1.6.3 Schedule Software Settings and Restrictions

a. Activity Constraints: Date/time constraint(s), other than those required by the contract, will not be allowed unless accepted by the Contracting Officer. Identify any constraints proposed and provide an explanation for the purpose of the constraint in the Narrative Report.

b. Default Progress Data Disallowed: Actual Start and Actual Finish dates on the CPM schedule shall match the dates on the Contractor Quality Control and Production Reports.

c. Software Settings: Schedule calculations and Out-of-Sequence progress (if applicable) shall be handled through Retained Logic, not Progress Override. All activity durations and float values will be shown in days. Activity progress will be shown using Remaining Duration. Default activity type will be set to "Task Dependent".

d. At a minimum, include the following settings and parameters in Baseline Schedule preparation:

1. General: Calendars and Activity Codes are defined or established at the "Project" level, not the "Global" level.

2. Admin Drop-Down Menu, Admin Preferences, Time Periods Tab:

a) Time periods for P6 should be set to 8.0 Hours/Day, 40.0 Hours/Week, 172.0 Hours/Month and 2000.0 Hours/Year.

b) Allow users to specify the number of work hours for each time period: Should be unchecked.

3. Project Level, Date Tab:

a) Set "Must Finish By" date to "Contract Completion Date".

4. Project Level, Default Tab:

   a) Duration Type: Set to "Fixed Duration & Units".

   b) Percent Complete Type: Set to "Physical".

   c) Activity Type: Set to "Task Dependent".

   d) Calendar: Set to "Standard 5 Day Workweek". Calendar shall reflect Saturday, Sunday and all Federal holidays as non-work days. Alternative calendars may be used with Contracting Officer approval.

5. Project Level, Calculations Tab:

   a) Price/Unit: Set to "$1/h".

   b) Activity percent complete based on activity steps: Should be Checked.

   c) Reset Remaining Duration and Units to Original: Should be Checked.

   d) Subtract Actual from At Completion: Should be Checked.

   e) Recalculate Actual units and Cost when duration % completes changes: Should be Checked.

   f) Update units when costs change on resource assignments: Should be Unchecked.

   g) Link Actual and Actual This Period Units and Cost: Should be Checked.

6. Project Level, Settings Tab:

   a) Define Critical Activities: Check "Total Float is less than or equal to" and add "0d".

7. Work Breakdown Structure Level, Earned Value Tab:

   a) Technique for Computing Performance Percent Complete: "Activity percent complete" is selected.

   b) Technique for Computing Estimate to Complete (ETC): "PF = 1" is selected.

1.6.4 Required Tabular Reports

The following reports shall be included with the schedule submittal:

a. Log Report: Listing of all changes made between the previous schedule and current updated schedule.

b. Narrative Report: Identify and justify;

   1) Progress made in each area of the project;

   2) Critical Path;

3) Date/time constraint(s), other than those required by the contract;

4) Changes in the following; added or deleted activities, original and remaining durations for activities that have not started, logic, milestones, planned sequence of operations, critical path, and cost loading;

5) Any decrease in previously reported activity Earned Amount;

6) Pending items and status thereof, including permits, changes orders, and time extensions;

7) Status of Contract Completion Date and interim milestones;

8) Current and anticipated delays (describe cause of delay and corrective actions(s)); and

9) Description of current and future schedule problem areas. Each entry in the narrative report will cite the respective Activity ID and Activity Description, the date and reason for the change, and description of the change.

c. Earned Value Report: Listing all activities having a budget amount cost loaded. Compilation of total earnings on the project from notice to proceed to current progress payment request. Group and sort activities as directed by the Contracting Officer. Show current budget, previous physical percent complete, to-date physical percent complete, previous earned value, to-date earned value and cost to complete on the report for each activity:

d. Schedule Variance Control (SVC) Diagram: With each schedule submission, provide a SVC diagram showing 1) Cash Flow S-Curves indicating planned project cost based on projected early and late activity finish dates and 2) Earned Value to-date. Revise Cash Flow S-Curves when the contract is modified, or as directed by the Contracting Officer.

1.7 SUBMISSION AND ACCEPTANCE

1.7.1 Baseline Schedule

The Baseline Schedule shall be submitted to the Contracting Officer no later than thirty 30 calendars days from the date of the contract award.

1.7.2 Monthly Network Analysis Schedule Update

Contractor and Government representatives shall meet at monthly intervals to review and agree on the information presented in the updated project schedule. The submission of an acceptable, updated schedule to the Government is a condition precedent to the processing of the Contractor's pay request. An acceptable, updated schedule shall be submitted to the Government regardless of whether a Contractor's pay request will be submitted for the given period. If a Schedule of Prices is the basis for progress payments, it shall be consistent with the logic and activity breakdowns on the progress schedule. If progress payments are based on a cost-loaded schedule, the Contractor and Government shall agree on percentage of payment for each activity progressed during the update period.

Provide the following with each Schedule submittal:

a. Time Scaled Logic Diagram.

b. Reports listed in paragraph entitled "Required Tabular Reports."

c. Data disks containing the project schedule. Include the back-up native .xer file.

1.7.3 As-Built Schedule

As a condition precedent to the release of retention and making final payment, submit an "As-Built Schedule," as the last schedule update showing all activities at 100 percent completion. This schedule shall reflect the exact manner in which the project was actually constructed.

1.8 CONTRACT MODIFICATION

Submit a Time Impact Analysis with each cost and time proposal for a proposed change. Time Impact Analysis (TIA) shall illustrate the influence of each change or delay on the Contract Completion Date or milestones. No time extensions will be granted nor delay damages paid unless a delay occurs which consumes all available Project Float, and extends the Projected Finish beyond the Contract Completion Date.

a. Each TIA shall be in both narrative and schedule form demonstrating the delay impact.

b. Each TIA shall include a Fragmentary Network (fragment) demonstrating how the Contractor proposes to incorporate the impact into the most currently accepted schedule update. A fragment is defined as the sequence of new activities and/or activity revisions, logic relationships and resource changes that are proposed to be added to the existing schedule to demonstrate the influence of impacts to the schedule. The fragment shall identify the predecessors to the new activities and demonstrate the impacts to successor activities. The Contractor shall run the schedule calculations and submit the impacted schedule with the proposal or claim.

c. Unless the Contracting Officer requests otherwise, only conformed contract modifications shall be added into the Project NAS.

1.9 PROJECT FLOAT

Project Float is the length of time between the Contractor's Projected Finish Milestone and the Contract Completion Date Milestone. Project Float available in the schedule, at any time shall not be for the exclusive use of either the Government or the Contractor.

1.10 THREE-WEEK LOOK AHEAD SCHEDULE

The Contractor shall prepare and issue a 3-Week Look Ahead schedule to provide a more detailed day-to-day plan of upcoming work identified on the Project Network Analysis Schedule. The work plans shall be keyed to NAS activity numbers and updated each week to show the planned work for the current and following two-week period. Additionally, include upcoming outages, closures, preparatory meetings, and initial meetings. Identify critical path activities on the Three-Week Look Ahead Schedule. The

detail work plans are to be bar chart type schedules, maintained separately from the Project NAS on an electronic spreadsheet program and printed on 8 ½ by 11 sheets as directed by the Contracting Officer. Activities shall not exceed 5 working days in duration and have sufficient level of detail to assign crews, tools and equipment required to complete the work. Three hard copies and one electronic file of the 3-Week Look Ahead Schedule shall be delivered to the Contracting Officer no later than 8 a.m. each Monday and reviewed during the weekly CQC Coordination Meeting.

PART 2 PRODUCTS

Not used.

PART 3 EXECUTION

Not used.

-- End of Section --

Initial Project Schedule (IPS)
Review Worksheet

Project Name: _____ Contract No.: _____

Contractor: _____ Contractor Scheduler: _____

NAVFAC IPS Reviewer: _____

Primavera Project ID: _____ Primavera Project Name: _____

NTP: _____ Contract Completion Date (CCD): _____

Interim or Phased Completion Contract Dates (if specified): _____

Total Contract Award: $ _____

ITM	DESCRIPTION	Y	N
IPS REPORTING & SOFTWARE (2.4.1)			
Reports Submitted			
1	P6 Project import file in Primavera Project Manager (.XER) 6.2 export file format. **(KTR)**		
2	Narrative Report		
3	Network Diagram (Schedule)		
4	Earned Value Report (If schedule cost loading specified)		
5	S-Curves (If schedule cost loading specified)		
6	All required submittals are provided by the contractor		
Software			
7	P6 was used to prepare the schedule **(KTR)**		
GENERAL SCHEDULE INFORMATION (Run Primavera Schedule Report/Log) (2.4.2)			
8	Start and Finish dated did not change after scheduling the project		
9	Retained Logic is used when scheduling progressed activities		
10	Critical activities defined as Total Float less than or equal to 0		
11	No activities have started or are in progress		
12	All Constraints are Contractually defined		
13	The only activity without predecessor(s) is the activity with the earliest start date		
14	The only activity without successor(s) is the activity with the latest finish date		
15	BLANK		
16	The Latest Early Finish Date is on or before the Contract Completion Date (CCD)		
17	No more than 20% of the activities are Critical or Near Critical; Activities with Total Float less than 14 working days are Near Critical		
PROJECT REQUIREMENTS AND SETTINGS			
Schedule Dates (2.4.3)			
18	The project Must Finish By date is set to the current CCD		
19	The Must Finish By Time is set to 5pm		
Defaults (2.4.3)			
20	Duration Type is set to Fixed Duration & Units		

Initial Project Schedule (IPS) Review Worksheet

Project Name: _____ Contract No.: _____

21	Percent Complete Type is set to Physical		
22	Activity Type is set to Task Dependent		
23	The default Project Calendar reflects Saturday, Sunday and all Federal Holidays as non-work days		
Settings (2.4.3)			
24	Total Float less than or equal to 0 defines critical activity		
Calculations (2.4.3)			
25	Price/Unit is set to $1/h		
26	Activity percent complete based on activity steps is checked		
27	Reset Remaining Duration and Units to Original is selected		
28	Subtract Actual from At Completion is selected		
29	Recalculate Actual Units and Cost when duration % complete changes is checked		
30	Update units when costs change on resource assignments is unchecked		
31	Link Actual and Actual This Period Units and Cost is checked		
Earned Value (2.4.4)			
Technique For Computing Performance Percent Complete			
32	Activity percent complete is selected		
Technique For Computing Estimate To Complete (ETC)			
33	PF = 1 is selected		
Hours Per Time Period (2.4.5)			
34	Verified with the contractor that the Time Periods established for P6 on the computer the project was created and maintained are set to 8.0 Hours/Day, 40.0 Hours/Week, 172.0 Hours/Month and 2000.0 Hours/Year		
35	Time Periods established for P6 on the Government computer matches the Time Periods established on the contractor computer		
36	Allow users to specify the number of work hours for each time period is unchecked		
Project Calendars (2.4.6)			
Standard Calendars			
37	Calendar(s) are defined at the Project level		
38	A 5-day workweek calendar is defined for the project that establishes Saturdays, Sundays and all federal holidays as non-work days		
39	A 6-day workweek calendar may be defined for the project. The 6-day workweek calendar establishes Sundays and all federal holidays as non-work days		
40	A 7-day workweek calendar may be defined for the project. If defined, it establishes Saturdays, Sundays and all federal holidays as workdays		
41	Total work hours/day for all defined calendars is set to 8		
42	Standard Calendars are correctly assigned to activities		
Weather Calendars			
43	A project level Weather Calendar is defined		
44	The weather calendar is based on the Standard 5-Day Workweek Calendar		

Initial Project Schedule (IPS) Review Worksheet

Project Name: _____ Contract No.: _____

45	Anticipated non-work days due to adverse weather are assigned to normal workdays (Mon-Fri)		
46	The approved number of anticipated non-work days per month due to adverse weather is assigned		
47	The Weather Calendar is assigned to activities that could be delayed by adverse weather		
Special Calendars			
48	Special Calendar(s) defined for the project are properly set-up		
49	Special Calendar(s) are correctly assigned to activities		
ACTIVITY CODES (2.4.7)			
50	Activity Codes are established at the Project Level		
51	As a minimum, Activity Codes identified in the scheduling specification and/or established by the Contracting Officer are defined for the project		
ACTIVITY DATA, SETTINGS AND ASSIGNMENTS			
Activity Detail (2.4.8)			
52	Activity Type is set to Task Dependent, Duration Type is set to Fixed Duration & Units and % Complete Type is set to Physical for all activities		
53	Calendars are correctly assigned to activities		
Description and Duration (2.4.9)			
54	Activity Descriptions adequately define work scope		
55	Original activity durations are reasonable		
56	No on-site construction activity has a duration greater than 20 working days		
57	Actual Activity Start and Finish dates will be easy to determine/verify		
58	Work-in-Place percent complete for partially completed activates will be easy to determine/verify		
Schedule Logic			
59	No Negative Lags **(KTR)**		
60	Finish-To-Start relationships are all assigned 0 Lag **(KTR)**		
Contract Milestone Activities (2.4.10)			
61	Interim or Phased Completion Milestone Activity dates match Contract dates(if specified)		
Activities Assigned Government Responsibility For Completing (2.4.11)			
62	Responsibility for completing the activity is correctly assigned to the Government		
63	Durations comply with contract requirements		
Longest Path (2.4.12)			
64	Government activities are not arbitrarily placed on the Longest Path		
65	The Longest Path is made up of activities that you expect to drive project completion		
66	The Longest Path shows reasonable work flow and sequencing		
67	There are no time gaps between activities on the Longest Path		
COST LOADING (2.4.13)			
68	The total cost budget equals the contract value		
69	Activities that should have a cost budget are cost loaded		
70	Budget $ are equitable spread throughout the Project – Not Front End Loaded		
71	Anomalies in monthly and cumulative Budged Cost distribution are explainable		

SECTION 01 33 00

SUBMITTAL PROCEDURES
05/11

PART 1 GENERAL

1.1 DEFINITIONS

1.1.1 Submittal Descriptions (SD)

Submittals requirements are specified in the technical sections. Submittals are identified by Submittal Description (SD) numbers and titles as follows:

SD-01 Preconstruction Submittals

Submittals which are required prior to or commencing work on site.

Certificates of insurance

Surety bonds

List of proposed Subcontractors

List of proposed products

Construction progress schedule

Network Analysis Schedule (NAS)

Submittal register

Schedule of prices or Earned Value Report

Health and safety plan

Work plan

Quality Control(QC) plan

Environmental protection plan

SD-02 Shop Drawings

Drawings, diagrams and schedules specifically prepared to illustrate some portion of the work.

Diagrams and instructions from a manufacturer or fabricator for use in producing the product and as aids to the Contractor for integrating the product or system into the project.

Drawings prepared by or for the Contractor to show how multiple systems and interdisciplinary work will be coordinated.

SD-03 Product Data

Catalog cuts, illustrations, schedules, diagrams, performance charts,

instructions and brochures illustrating size, physical appearance and other characteristics of materials, systems or equipment for some portion of the work.

Samples of warranty language when the contract requires extended product warranties.

SD-04 Samples

Fabricated or unfabricated physical examples of materials, equipment or workmanship that illustrate functional and aesthetic characteristics of a material or product and establish standards by which the work can be judged.

Color samples from the manufacturer's standard line (or custom color samples if specified) to be used in selecting or approving colors for the project.

Field samples and mock-ups constructed on the project site establish standards by which the ensuring work can be judged. Includes assemblies or portions of assemblies which are to be incorporated into the project and those which will be removed at conclusion of the work.

SD-05 Design Data

Design calculations, mix designs, analyses or other data pertaining to a part of work.

SD-06 Test Reports

Report signed by authorized official of testing laboratory that a material, product or system identical to the material, product or system to be provided has been tested in accord with specified requirements. Unless specified in another section, testing must have been within three years of date of contract award for the project.

Report which includes findings of a test required to be performed by the Contractor on an actual portion of the work or prototype prepared for the project before shipment to job site.

Report which includes finding of a test made at the job site or on sample taken from the job site, on portion of work during or after installation.

Investigation reports.

Daily logs and checklists.

Final acceptance test and operational test procedure.

SD-07 Certificates

Statements printed on the manufacturer's letterhead and signed by responsible officials of manufacturer of product, system or material attesting that product, system or material meets specification requirements. Must be dated after award of project contract and clearly name the project.

Document required of Contractor, or of a manufacturer, supplier,

installer or Subcontractor through Contractor. The document purpose is to further promote the orderly progression of a portion of the work by documenting procedures, acceptability of methods or personnel qualifications.

Confined space entry permits.

Text of posted operating instructions.

SD-08 Manufacturer's Instructions

Preprinted material describing installation of a product, system or material, including special notices and (MSDS)concerning impedances, hazards and safety precautions.

SD-09 Manufacturer's Field Reports

Documentation of the testing and verification actions taken by manufacturer's representative at the job site, in the vicinity of the job site, or on a sample taken from the job site, on a portion of the work, during or after installation, to confirm compliance with manufacturer's standards or instructions. The documentation must be signed by an authorized official of a testing laboratory or agency and state the test results; and indicate whether the material, product, or system has passed or failed the test.

Factory test reports.

SD-10 Operation and Maintenance Data

Data that is furnished by the manufacturer, or the system provider, to the equipment operating and maintenance personnel, including manufacturer's help and product line documentation necessary to maintain and install equipment. This data is needed by operating and maintenance personnel for the safe and efficient operation, maintenance and repair of the item.

This data is intended to be incorporated in an operations and maintenance manual or control system.

SD-11 Closeout Submittals

Documentation to record compliance with technical or administrative requirements or to establish an administrative mechanism.

Submittals required for Guiding Principle Validation (GPV) or Third Party Certification (TPC).

Special requirements necessary to properly close out a construction contract. For example, Record Drawings and as-built drawings. Also, submittal requirements necessary to properly close out a major phase of construction on a multi-phase contract.

1.1.2 Approving Authority

Office or designated person authorized to approve submittal.

1.1.3 Work

As used in this section, on- and off-site construction required by contract documents, including labor necessary to produce submittals, construction, materials, products, equipment, and systems incorporated or to be incorporated in such construction.

1.2 SUBMITTALS

Government approval is required for submittals with a "G" designation; submittals not having a "G" designation are for Contractor QC approval. Submit the following in accordance with this section.

SD-01 Preconstruction Submittals

Submittal Register; G

1.3 SUBMITTAL CLASSIFICATION

Submittals are classified as follows:

1.3.1 Government Approved (G)

Government approval is required for extensions of design, critical materials, deviations, equipment whose compatibility with the entire system must be checked, and other items as designated by the Contracting Officer. Within the terms of the Contract Clause SPECIFICATIONS AND DRAWINGS FOR CONSTRUCTION, they are considered to be "shop drawings."

1.4 FORWARDING SUBMITTALS REQUIRING GOVERNMENT APPROVAL

1.4.1 Submittals Required from the Contractor

As soon as practicable after award of contract, and before procurement of fabrication, forward to the Commander, NAVFAC COR, Code CI4NAVFAC FPE, submittals required in the technical sections of this specification, including shop drawings, product data and samples. Forward one copy of the transmittal form for all submittals to the Resident Officer in Charge of Construction.

NAVFAC COR will review and approve for the Contracting Officer those submittals reserved for Contracting Officer approval to verify submittals comply with the contract requirements.

1.4.1.1 O&M Data

NAVFAC COR will review and approve for the Contracting Officer O&M Data to verify the submittals comply with the contract requirements; submit data specified for a given item within 30 calendar days after the item is delivered to the contract site.

In the event the Contractor fails to deliver O&M Data within the time limits specified, the Contracting Officer may withhold from progress payments 50 percent of the price of the item with which such O&M Data are applicable.

1.4.1.2 Submittals Reserved for NAVFAC COR Approval

As an exception to the standard submittal procedure specified above,

submit the following to the Commander, NAVFAC COR, Code CI4NAVFAC FPE, :

b. Section 23 05 93 TESTING, ADJUSTING, AND BALANCING FOR HVAC: All submittals

1.5 PREPARATION

1.5.1 Transmittal Form

Transmit each submittal, except sample installations and sample panels to office of . Transmit submittals with transmittal form prescribed by Contracting Officer and standard for project. On the transmittal form identify Contractor, indicate date of submittal, and include information prescribed by transmittal form and required in paragraph IDENTIFYING SUBMITTALS of this section. Process transmittal forms to record actions regarding samples .

1.5.2 Identifying Submittals

When submittals are provided by a Subcontractor, the Prime Contractor is to prepare, review and stamp with Contractor's approval all specified submittals prior to submitting for Government approval.

Identify submittals, except sample installations and sample panels, with the following information permanently adhered to or noted on each separate component of each submittal and noted on transmittal form. Mark each copy of each submittal identically, with the following:

a. Project title and location.

b. Construction contract number.

c. Date of the drawings and revisions.

d. Name, address, and telephone number of subcontractor, supplier, manufacturer and any other subcontractor associated with the submittal.

e. Section number of the specification section by which submittal is required.

f. Submittal description (SD) number of each component of submittal.

g. When a resubmission, add alphabetic suffix on submittal description, for example, submittal 18 would become 18A, to indicate resubmission.

h. Product identification and location in project.

1.5.3 Format for SD-02 Shop Drawings

Shop drawings are not to be less than 8 1/2 by 11 inches nor more than 30 by 42 inches, except for full size patterns or templates. Prepare drawings to accurate size, with scale indicated, unless other form is required. Drawings are to be suitable for reproduction and be of a quality to produce clear, distinct lines and letters with dark lines on a white background.

Present 8 1/2 by 11 inches sized shop drawings as part of the bound volume for submittals required by section. Present larger drawings in sets.

Include on each drawing the drawing title, number, date, and revision numbers and dates, in addition to information required in paragraph IDENTIFYING SUBMITTALS.

Number drawings in a logical sequence. Each drawing is to bear the number of the submittal in a uniform location adjacent to the title block. Place the Government contract number in the margin, immediately below the title block, for each drawing.

Reserve a blank space, no smaller than 1 by 1 inches on the right hand side of each sheet for the Government disposition stamp.

Dimension drawings, except diagrams and schematic drawings; prepare drawings demonstrating interface with other trades to scale. Use the same unit of measure for shop drawings as indicated on the contract drawings. Identify materials and products for work shown.

Include the nameplate data, size and capacity on drawings. Also include applicable federal, military, industry and technical society publication references.

Submit drawings PDF format.

1.5.4 Format of SD-03 Product Data and SD-08 Manufacturer's Instructions

Present product data submittals for each section as a complete, bound volume. Include table of contents, listing page and catalog item numbers for product data.

Indicate, by prominent notation, each product which is being submitted; indicate specification section number and paragraph number to which it pertains.

Supplement product data with material prepared for project to satisfy submittal requirements for which product data does not exist. Identify this material as developed specifically for project, with information and format as required for submission of SD-07 Certificates.

Include the manufacturer's name, trade name, place of manufacture, and catalog model or number on product data. Also include applicable federal, military, industry and technical society publication references. Should manufacturer's data require supplemental information for clarification, submit as specified for SD-07 Certificates.

Where equipment or materials are specified to conform to industry and technical society reference standards of the organizations such as American National Standards Institute (ANSI), ASTM International (ASTM), National Electrical Manufacturer's Association (NEMA), Underwriters Laboratories (UL), and Association of Edison Illuminating Companies (AEIC), submit proof of such compliance. The label or listing by the specified organization will be acceptable evidence of compliance. In lieu of the label or listing, submit a certificate from an independent testing organization, competent to perform testing, and approved by the Contracting Officer. State on the certificate that the item has been tested in accordance with the specified organization's test methods and

that the item complies with the specified organization's reference standard.

Collect required data submittals for each specific material, product, unit of work, or system into a single submittal and marked for choices, options, and portions applicable to the submittal. Mark each copy of the product data identically. Partial submittals will not be accepted for expedition of construction effort.

Submit manufacturer's instructions prior to installation.

1.5.5 Format of SD-04 Samples

Furnish samples in sizes below, unless otherwise specified or unless the manufacturer has prepackaged samples of approximately same size as specified:

a. Sample of Equipment or Device: Full size.

b. Sample of Materials Less Than 2 by 3 inches: Built up to 8 1/2 by 11 inches.

c. Sample of Materials Exceeding 8 1/2 by 11 inches: Cut down to 8 1/2 by 11 inches and adequate to indicate color, texture, and material variations.

d. Sample of Linear Devices or Materials: 10 inch length or length to be supplied, if less than 10 inches. Examples of linear devices or materials are conduit and handrails.

e. Sample of Non-Solid Materials: Pint. Examples of non-solid materials are sand and paint.

f. Color Selection Samples: 2 by 4 inches. Where samples are specified for selection of color, finish, pattern, or texture, submit the full set of available choices for the material or product specified. Sizes and quantities of samples are to represent their respective standard unit.

g. Sample Panel: 4 by 4 feet.

h. Sample Installation: 100 square feet.

Samples Showing Range of Variation: Where variations in color, finish, pattern, or texture are unavoidable due to nature of the materials, submit sets of samples of not less than three units showing extremes and middle of range. Mark each unit to describe its relation to the range of the variation.

Reusable Samples: Incorporate returned samples into work only if so specified or indicated. Incorporated samples are to be in undamaged condition at time of use.

Recording of Sample Installation: Note and preserve the notation of area constituting sample installation but remove notation at final clean up of project.

When color, texture or pattern is specified by naming a particular manufacturer and style, include one sample of that manufacturer and style,

for comparison.

1.5.6 Format of SD-05 Design Data and SD-07 Certificates

Provide design data and certificates on 8 1/2 by 11 inches paper. Provide a bound volume for submittals containing numerous pages.

1.5.7 Format of SD-06 Test Reports and SD-09 Manufacturer's Field Reports

Provide reports on 8 1/2 by 11 inches paper in a complete bound volume.

Indicate by prominent notation, each report in the submittal. Indicate specification number and paragraph number to which it pertains.

1.5.8 Format of SD-10 Operation and Maintenance Data (O&M)

Comply with the requirements specified in Section 01 78 23 OPERATION AND MAINTENANCE DATA for O&M Data format.

1.5.9 Format of SD-01 Preconstruction Submittals and SD-11 Closeout Submittals

When submittal includes a document which is to be used in project or become part of project record, other than as a submittal, do not apply Contractor's approval stamp to document, but to a separate sheet accompanying document.

1.5.10 Source Drawings for Shop Drawings

The entire set of Source Drawing files (DWG) will not be provided to the Contractor. Only those requested by the Contractor to prepare shop drawings may be provided. Request the specific Drawing Number only for the preparation of Shop Drawings. These drawings may only be provided after award.

1.5.10.1 Terms and Conditions

Data contained on these electronic files must not be used for any purpose other than as a convenience in the preparation of construction data for the referenced project. Any other use or reuse shall be at the sole risk of the Contractor and without liability or legal exposure to the Government. The Contractor must make no claim and waives to the fullest extent permitted by law, any claim or cause of action of any nature against the Government, its agents or sub consultants that may arise out of or in connection with the use of these electronic files. The Contractor must, to the fullest extent permitted by law, indemnify and hold the Government harmless against all damages, liabilities or costs, including reasonable attorney's fees and defense costs, arising out of or resulting from the use of these electronic files.

These electronic Source Drawing files are not construction documents. Differences may exist between the Source Drawing files and the corresponding construction documents. The Government makes no representation regarding the accuracy or completeness of the electronic Source Drawing files, nor does it make representation to the compatibility of these files with the Contractor hardware or software. In the event that a conflict arises between the signed and sealed construction documents prepared by the Government and the furnished Source Drawing files, the signed and sealed construction documents govern. The

Contractor is responsible for determining if any conflict exists. Use of these Source Drawing files does not relieve the Contractor of duty to fully comply with the contract documents, including and without limitation, the need to check, confirm and coordinate the work of all contractors for the project. If the Contractor uses, duplicates or modifies these electronic Source Drawing files for use in producing construction data related to this contract, remove all previous indicia of ownership (seals, logos, signatures, initials and dates).

1.5.11 Electronic File Format

Provide submittals in electronic format, with the exception of material samples required for SD-04 Samples items. In addition to the electronic submittal, provide three hard copies of the submittals. Compile the submittal file as a single, complete document, to include the Transmittal Form described within. Name the electronic submittal file specifically according to its contents, coordinate the file naming convention with the Contracting Officer. Electronic files must be of sufficient quality that all information is legible. Electronic format shall be in PDF, unless otherwise specified or directed by the Contracting Officer. Generate PDF files from original documents with bookmarks so that the text included in the PDF file is both searchable and can be copied. If documents are scanned, Optical Character Resolution (OCR) routines are required. Index and bookmark files exceeding 30 pages to allow efficient navigation of the file. When required, the electronic file must include a valid electronic signature, or scan of a signature.

Email electronic submittal documents fewer than 10MB to an email address as directed by the Contracting Officer. Provide electronic documents over 10MB on an optical disc, or through an electronic file sharing system such as the AMRDEC SAFE Web Application located at the following website: https://safe.amrdec.army.mil/safe/.

Provide hard copies of submittals when requested by the Contracting Officer. Up to five additional hard copies of any submittal may be requested at the discretion of the Contracting Officer, at no additional cost to the Government.

1.6 QUANTITY OF SUBMITTALS

1.6.1 Number of Copies of SD-02 Shop Drawings

Submit six copies of submittals of shop drawings requiring review and approval only by QC organization and seven copies of shop drawings requiring review and approval by Contracting Officer.

1.6.2 Number of Copies of SD-03 Product Data and SD-08 Manufacturer's Instructions

Submit in compliance with quantity requirements specified for shop drawings.

1.6.3 Number of Samples SD-04 Samples

a. Submit two samples, or two sets of samples showing range of variation, of each required item. One approved sample or set of samples will be retained by approving authority and one will be returned to Contractor.

b. Submit one sample panel or provide one sample installation where

directed. Include components listed in technical section or as directed.

c. Submit one sample installation, where directed.

d. Submit one sample of non-solid materials.

1.6.4 Number of Copies SD-05 Design Data and SD-07 Certificates

Submit in compliance with quantity requirements specified for shop drawings.

1.6.5 Number of Copies SD-06 Test Reports and SD-09 Manufacturer's Field Reports

Submit in compliance with quantity and quality requirements specified for shop drawings other than field test results that will be submitted with QC reports.

1.6.6 Number of Copies of SD-10 Operation and Maintenance Data

Submit three copies of O&M Data to the Contracting Officer for review and approval.

1.6.7 Number of Copies of SD-01 Preconstruction Submittals and SD-11 Closeout Submittals

Unless otherwise specified, submit three sets of administrative submittals.

1.7 VARIATIONS

Variations from contract requirements require both Designer of Record (DOR) and Government approval pursuant to contract Clause FAR 52.236-21 and will be considered where advantageous to Government.

1.7.1 Considering Variations

Discussion with Contracting Officer prior to submission, after consulting with the DOR, will help ensure functional and quality requirements are met and minimize rejections and re-submittals. When contemplating a variation which results in lower cost, consider submission of the variation as a Value Engineering Change Proposal (VECP).

Specifically point out variations from contract requirements in transmittal letters. Failure to point out deviations may result in the Government requiring rejection and removal of such work at no additional cost to the Government.

1.7.2 Proposing Variations

When proposing variation, deliver written request to the Contracting Officer, with documentation of the nature and features of the variation and why the variation is desirable and beneficial to Government, including the DOR's written analysis and approval. If lower cost is a benefit, also include an estimate of the cost savings. In addition to documentation required for variation, include the submittals required for the item. Clearly mark the proposed variation in all documentation.

1.7.3 Warranting that Variations are Compatible

When delivering a variation for approval, Contractor, including its Designer(s) of Record, warrants that this contract has been reviewed to establish that the variation, if incorporated, will be compatible with other elements of work.

1.7.4 Review Schedule is Modified

In addition to normal submittal review period, a period of 10 working days will be allowed for consideration by the Government of submittals with variations.

1.8 SUBMITTAL REGISTER

Prepare and maintain submittal register, as the work progresses. Do not change data which is output in columns (c), (d), (e), and (f) as delivered by Government; retain data which is output in columns (a), (g), (h), and (i) as approved. A submittal register showing items of equipment and materials for which submittals are required by the specifications is provided as an attachment. This list may not be all inclusive and additional submittals may be required. The Government will provide the initial submittal register in electronic format with the following fields completed, to the extent that will be required by the Government during subsequent usage.

Column (c): Lists specification section in which submittal is required.

Column (d): Lists each submittal description (SD No. and type, e.g. SD-02 Shop Drawings) required in each specification section.

Column (e): Lists one principal paragraph in specification section where a material or product is specified. This listing is only to facilitate locating submitted requirements. Do not consider entries in column (e) as limiting project requirements.

Column (f): Indicate approving authority for each submittal.

Thereafter, the Contractor is to track all submittals by maintaining a complete list, including completion of all data columns, including dates on which submittals are received and returned by the Government.

1.8.1 Use of Submittal Register

Submit submittal register. Submit with QC plan and project schedule. Verify that all submittals required for project are listed and add missing submittals. Coordinate and complete the following fields on the register submitted with the QC plan and the project schedule:

Column (a) Activity Number: Activity number from the project schedule.

Column (g) Contractor Submit Date: Scheduled date for approving authority to receive submittals.

Column (h) Contractor Approval Date: Date Contractor needs approval of submittal.

1.8.2 Contractor Use of Submittal Register

Update the following fields with each submittal throughout contract.

Column (b) Transmittal Number: Contractor assigned list of consecutive numbers.

Column (j) Action Code (k): Date of action used to record Contractor's review when forwarding submittals to QC.

Column (l) List date of submittal transmission.

Column (q) List date approval received.

1.8.3 Approving Authority Use of Submittal Register

Update the following fields.

Column (b) Transmittal Number: Contractor assigned list of consecutive numbers.

Column (l) List date of submittal receipt.

Column (m) through (p) List Date related to review actions.

Column (q) List date returned to Contractor.

1.8.4 Action Codes

Entries for columns (j) and (o), are to be used are as follows (others may be prescribed by Transmittal Form):

1.8.4.1 Government Review Action Codes

"A" - "Approved as submitted"; "Completed"

"B" - "Approved, except as noted on drawings"; "Completed"

"C" - "Approved, except as noted on drawings; resubmission required"; "Resubmit"

"D" - "Returned by separate correspondence"; "Completed"

"E" - "Disapproved (See attached)"; "Resubmit"

"F" - "Receipt acknowledged"; "Completed"

"G" - "Other (Specify)"; "Resubmit"

"X" - "Receipt acknowledged, does not comply with contract requirements"; "Resubmit"

1.8.5 Copies Delivered to the Government

Deliver one copy of submittal register updated by Contractor to Government with each invoice request.

1.9 SCHEDULING

Schedule and submit concurrently submittals covering component items forming a system or items that are interrelated. Include certifications to be submitted with the pertinent drawings at the same time. No delay damages or time extensions will be allowed for time lost in late submittals. An additional 7 calendar days will be allowed and shown on the register for review and approval of submittals for refrigeration and HVAC control systems.

a. Coordinate scheduling, sequencing, preparing and processing of submittals with performance of work so that work will not be delayed by submittal processing. Allow for potential resubmittal of requirements.

b. Submittals called for by the contract documents will be listed on the register. If a submittal is called for but does not pertain to the contract work, the Contractor is to include the submittal in the register and annotate it "N/A" with a brief explanation. Approval by the Contracting Officer does not relieve the Contractor of supplying submittals required by the contract documents but which have been omitted from the register or marked "N/A."

c. Re-submit register and annotate monthly by the Contractor with actual submission and approval dates. When all items on the register have been fully approved, no further re-submittal is required.

d. Carefully control procurement operations to ensure that each individual submittal is made on or before the Contractor scheduled submittal date shown on the approved "Submittal Register."

e. Except as specified otherwise, allow review period, beginning with receipt by approving authority, that includes at least 30 working days for submittals for QC Manager approval and 30 working days for submittals for Contracting Officer approval. Period of review for submittals with Contracting Officer approval begins when Government receives submittal from QC organization.

f. For submittals requiring review by fire protection engineer, allow review period, beginning when Government receives submittal from QC organization, of 30 working days for return of submittal to the Contractor.

g. Period of review for each resubmittal is the same as for initial submittal.

1.9.1 Reviewing, Certifying, Approving Authority

The QC organization is responsible for reviewing and certifying that submittals are in compliance with contract requirements. Approving authority on submittals is QC Manager unless otherwise specified for specific submittal. At each "Submittal" paragraph in individual specification sections, a notation "G," following a submittal item, indicates Contracting Officer is approving authority for that submittal item. An "S" following a submittal item, indicates that the QC Manager is the approving authority, and that a copy of the approved submittal must be provided to the Designer of Record.

1.9.2 Constraints

Conform to provisions of this section, unless explicitly stated otherwise

for submittals listed or specified in this contract.

Submit complete submittals for each definable feature of work. Submit at the same time components of definable feature interrelated as a system.

When acceptability of a submittal is dependent on conditions, items, or materials included in separate subsequent submittals, submittal will be returned without review.

Approval of a separate material, product, or component does not imply approval of assembly in which item functions.

1.9.3 QC Organization Responsibilities

a. Note date on which submittal was received from Contractor on each submittal.

b. Review each submittal; and check and coordinate each submittal with requirements of work and contract documents.

c. Review submittals for conformance with project design concepts and compliance with contract documents.

d. Act on submittals, determining appropriate action based on QC organization's review of submittal.

(1) When QC Manager is approving authority, take appropriate action on submittal from the possible actions defined in paragraph APPROVED SUBMITTALS.

(2) When Contracting Officer is approving authority or when variation has been proposed, forward submittal to Government with certifying statement or return submittal marked "not reviewed" or "revise and resubmit" as appropriate. The QC organization's review of submittal determines appropriate action.

e. Ensure that material is clearly legible.

f. Stamp each sheet of each submittal with QC certifying statement or approving statement, except that data submitted in bound volume or on one sheet printed on two sides may be stamped on the front of the first sheet only.

(1) When approving authority is Contracting Officer, QC organization will certify submittals forwarded to Contracting Officer with the following certifying statement:

"I hereby certify that the (equipment) (material) (article) shown and marked in this submittal is that proposed to be incorporated with contract Number N40084-XX-C-XXXX, is in compliance with the contract drawings and specification, can be installed in the allocated spaces, and is submitted for Government approval.

Certified by Submittal Reviewer _____, Date _____
(Signature when applicable)

Certified by QC Manager _____, Date _____"
(Signature)

(2) When approving authority is QC Manager, QC Manager will use the following approval statement when returning submittals to Contractor as "Approved" or "Approved as Noted."

"I hereby certify that the (material) (equipment) (article) shown and marked in this submittal and proposed to be incorporated with contract Number N40084-XX-C-XXXX, is in compliance with the contract drawings and specification, can be installed in the allocated spaces, and is approved for use.

Certified by Submittal Reviewer _____, Date _____
(Signature when applicable)

Approved by QC Manager _____, Date _____"
(Signature)

g. Sign certifying statement or approval statement. The QC organization member designated in the approved QC plan is the person signing certifying statements. The use of original ink for signatures is required. Stamped signatures are not acceptable.

h. Update submittal register as submittal actions occur and maintain the submittal register at project site until final acceptance of all work by Contracting Officer.

i. Retain a copy of approved submittals at project site, including Contractor's copy of approved samples.

j. For "S" submittals, provide a copy of the approved submittal to the Designer of Record.

1.10 GOVERNMENT APPROVING AUTHORITY

When approving authority is Contracting Officer, the Government will:

a. Note date on which submittal was received from QC Manager.

b. Review submittals for approval within scheduling period specified and only for conformance with project design concepts and compliance with contract documents.

c. Identify returned submittals with one of the actions defined in paragraph REVIEW NOTATIONS and with markings appropriate for action indicated.

Upon completion of review of submittals requiring Government approval, stamp and date submittals. One copies of the submittal will be retained by the Contracting Officer and the remaining copies of the submittal will be returned to the Contractor.

1.10.1 Review Notations

Submittals will be returned to the Contractor with the following notations:

a. Submittals marked "approved" or "accepted" authorize the Contractor to proceed with the work covered.

b. Submittals marked "approved as noted" "or approved, except as noted, resubmittal not required," authorize the Contractor to proceed with

the work covered provided he takes no exception to the corrections.

c. Submittals marked "not approved" or "disapproved," or "revise and resubmit," indicate noncompliance with the contract requirements or design concept, or that submittal is incomplete. Resubmit with appropriate changes. No work shall proceed for this item until resubmittal is approved.

d. Submittals marked "not reviewed" will indicate submittal has been previously reviewed and approved, is not required, does not have evidence of being reviewed and approved by Contractor, or is not complete. A submittal marked "not reviewed" will be returned with an explanation of the reason it is not reviewed. Resubmit submittals returned for lack of review by Contractor or for being incomplete, with appropriate action, coordination, or change.

1.11 DISAPPROVED OR REJECTED SUBMITTALS

Contractor shall make corrections required by the Contracting Officer. If the Contractor considers any correction or notation on the returned submittals to constitute a change to the contract drawings or specifications; notice as required under the Contract clause CHANGES, is to be given to the Contracting Officer. Contractor is responsible for the dimensions and design of connection details and construction of work. Failure to point out deviations may result in the Government requiring rejection and removal of such work at the Contractor's expense.

If changes are necessary to submittals, make such revisions and submission of the submittals in accordance with the procedures above. No item of work requiring a submittal change is to be accomplished until the changed submittals are approved.

1.12 APPROVED SUBMITTALS

The Contracting Officer's approval or acceptance of submittals is not to be construed as a complete check, and indicates only that the general method of construction, materials, detailing and other information are satisfactory.

Approval or acceptance will not relieve the Contractor of the responsibility for any error which may exist, as the Contractor under the Contractor Quality Control (CQC) requirements of this contract is responsible for dimensions, the design of adequate connections and details, and the satisfactory construction of all work.

After submittals have been approved or accepted by the Contracting Officer, no resubmittal for the purpose of substituting materials or equipment will be considered unless accompanied by an explanation of why a substitution is necessary.

1.13 APPROVED SAMPLES

Approval of a sample is only for the characteristics or use named in such approval and is not be construed to change or modify any contract requirements. Before submitting samples, the Contractor to assure that the materials or equipment will be available in quantities required in the project. No change or substitution will be permitted after a sample has been approved.

Match the approved samples for materials and equipment incorporated in the work. If requested, approved samples, including those which may be damaged in testing, will be returned to the Contractor, at his expense, upon completion of the contract. Samples not approved will also be returned to the Contractor at its expense, if so requested.

Failure of any materials to pass the specified tests will be sufficient cause for refusal to consider, under this contract, any further samples of the same brand or make of that material. Government reserves the right to disapprove any material or equipment which previously has proved unsatisfactory in service.

Samples of various materials or equipment delivered on the site or in place may be taken by the Contracting Officer for testing. Samples failing to meet contract requirements will automatically void previous approvals. Contractor to replace such materials or equipment to meet contract requirements.

Approval of the Contractor's samples by the Contracting Officer does not relieve the Contractor of his responsibilities under the contract.

PART 2 PRODUCTS

Not Used

PART 3 EXECUTION

Not Used

-- End of Section --

SECTION 01 35 26.00 22

GOVERNMENTAL SAFETY REQUIREMENTS (PWD ME)
12/14

PART 1 GENERAL

This specification applies to all Design-Bid-Build and Design-Build projects at the Portsmouth Naval Shipyard.

1.1 REFERENCES

The publications listed below form a part of this specification to the extent referenced. The publications are referred to within the text by the basic designation only.

AMERICAN SOCIETY OF SAFETY ENGINEERS (ASSE/SAFE)

ASSE/SAFE A10.32	(2004) Fall Protection
ASSE/SAFE A10.34	(2001; R 2005) Protection of the Public on or Adjacent to Construction Sites
ASSE/SAFE Z359.1	(2007) Safety Requirements for Personal Fall Arrest Systems, Subsystems and Components

ASME INTERNATIONAL (ASME)

ASME B30.22	(2010) Articulating Boom Cranes
ASME B30.3	(2009) Tower Cranes
ASME B30.5	(2011) Mobile and Locomotive Cranes
ASME B30.8	(2010) Floating Cranes and Floating Derricks

NATIONAL FIRE PROTECTION ASSOCIATION (NFPA)

NFPA 10	(2010; Errata 2012) Standard for Portable Fire Extinguishers
NFPA 241	(2009) Safeguarding Construction, Alteration, and Demolition Operations
NFPA 51B	(2009; TIA 09-1) Fire Prevention during Welding, Cutting, and Other Hot Work
NFPA 70	(2014) National Electrical Code
NFPA 70E	(2012; Errata 1) Electrical Safety in the Workplace

U.S. ARMY CORPS OF ENGINEERS (USACE)

EM 385-1-1	(2008; Errata 1-2010; Changes 1-3 2010; Changes 4-6 2011; Change 7 2012) Safety

and Health Requirements Manual

U.S. NATIONAL ARCHIVES AND RECORDS ADMINISTRATION (NARA)

10 CFR 20	Standards for Protection against Radiation
29 CFR 1910	Occupational Safety and Health Standards
29 CFR 1910.146	Permit-required Confined Spaces
29 CFR 1910.147	Control of Hazardous Energy (Lock Out/Tag Out)
29 CFR 1915	Confined and Enclosed Spaces and Other Dangerous Atmospheres in Shipyard Employment
29 CFR 1926	Safety and Health Regulations for Construction
29 CFR 1926.16	Rules of Construction
29 CFR 1926.500	Fall Protection
CPL 2.100	(1995) Application of the Permit-Required Confined Spaces (PRCS) Standards, 29 CFR 1910.146.

U.S. NAVAL FACILITIES ENGINEERING COMMAND (NAVFAC)

NAVFAC P-307	(2012) Management of Weight Handling Equipment
ATTACHMENT "A"	"CONTRACTOR CRANE, MULTI-PURPOSE MACHINE, FORKLIFT, CONSTRUCTION EQUIPMENT, AND RIGGING GEAR REQUIREMENTS"
ATTACHMENT "B"	"PORTSMOUTH NAVAL SHIPYARD UTILITY LOCATING PROCEDURES"

The attachments are included following the end of this specification section. If attachments are missing from this copy of specification notify the Contracting Officer.

1.2 DEFINITIONS

a. Competent Person for Fall Protection: A person who is capable of identifying hazardous or dangerous conditions in the personal fall arrest system or any component thereof, as well as their application and use with related equipment, and has the authority to take prompt corrective measures to eliminate the hazards of falling.

b. High Visibility Accident: Any mishap which may generate publicity or high visibility.

c. Medical Treatment: Treatment administered by a physician or by registered professional personnel under the standing orders of a physician. Medical treatment does not include first aid treatment even though provided by a physician or registered personnel.

d. Operating Envelope: The area surrounding any crane. Inside this "envelope" is the crane, the operator, riggers and crane walkers, rigging gear between the hook and the load, the load and the crane's supporting structure (ground, rail, etc.).

e. Recordable Injuries or Illnesses: Any work-related injury or illness that results in:

(1) Death, regardless of the time between the injury and death, or the length of the illness;

(2) Days away from work (any time lost after day of injury/illness onset);

(3) Restricted work;

(4) Transfer to another job;

(5) Medical treatment beyond first aid;

(6) Loss of consciousness; or

(7) A significant injury or illness diagnosed by a physician or other licensed health care professional, even if it did not result in (1) through (6) above.

f. "USACE" property and equipment specified in USACE EM 385-1-1 should be interpreted as Government property and equipment.

g. Weight Handling Equipment (WHE) Accident: A WHE accident occurs when any one or more of the eight elements in the operating envelope fails to perform correctly during operation, including operation during maintenance or testing resulting in personnel injury or death; material or equipment damage; dropped load; derailment; two-blocking; overload; or collision, including unplanned contact between the load, crane, or other objects. A dropped load, derailment, two-blocking, overload and collision are considered accidents even though no material damage or injury occur. A component failure (e.g., motor burnout, gear tooth failure, bearing failure) is not considered an accident solely due to material or equipment damage unless the component failure results in damage to other components (e.g., dropped boom, dropped load, roll over, etc.). Any mishap meeting the criteria described above shall be documented in both the Contractor Significant Incident Report (CSIR) and using the NAVFAC prescribed Navy Crane Center (NCC) form submitted within five days both as provided by the Contracting Officer. Comply with additional requirements and procedures for accidents in accordance with NAVFAC P-307, Section 12.

1.3 SUBMITTALS

Government approval is required for submittals with a "G" designation; submittals not having a "G" designation are for Contractor Quality Control approval. Submit the following in accordance with Section 01 33 00 SUBMITTAL PROCEDURES for Design-Bid-Build projects:

SD-01 Preconstruction Submittals

Accident Prevention Plan (APP); G

Activity Hazard Analysis (AHA); G

Crane Critical Lift Plan; G

Proof of qualification for Crane Operators; G

SD-06 Test Reports

Notifications and Reports

Submit reports as their incidence occurs, in accordance with the requirements of the paragraph entitled, "Notifications and Reports."

Accident Reports; G

Monthly Exposure Report; G

Crane Reports; G

SD-07 Certificates

Confined Space Entry Permit; G

Hot work permit; G

License certificates; G

Contractor Safety Self-Evaluation Checklist; G

Accident Notification; G

Certificate of Compliance (Crane); G

Submit one copy of each permit/certificate attached to each Daily Production or Quality Control Report

1.4 CONTRACTOR SAFETY SELF-EVALUATION CHECKLIST

Contracting Officer will provide a "Contractor Safety Self-Evaluation checklist" to the Contractor at the pre-construction conference. Complete the checklist monthly and submit with each request for payment voucher. An acceptable score of 90 or greater is required. Failure to submit the completed safety self-evaluation checklist or achieve a score of at least 90, may result in a retention of up to 10 percent of the voucher. Additionally, provide a Monthly Exposure Report and attach to the monthly billing request. This report is a compilation of employee-hours worked each month for all site workers, both prime and subcontractor. Failure to submit the report may result in retention of up to 10 percent of the voucher. The Contracting Officer will submit a copy of the Contractor Safety Self-Evaluation and Monthly Exposure Report to the local safety and occupational health office.

1.5 REGULATORY REQUIREMENTS

In addition to the detailed requirements included in the provisions of this contract, comply with the most recent edition of USACE EM 385-1-1,

and applicable Federal, State, and local laws, ordinances, criteria, rules and regulations. Submit matters of interpretation of standards to the appropriate administrative agency for resolution before starting work. Where the requirements of this specification, applicable laws, criteria, ordinances, regulations, and referenced documents vary, the most stringent requirements govern.

1.6 SITE QUALIFICATIONS, DUTIES AND MEETINGS

1.6.1 Personnel Qualifications

1.6.1.1 Site Safety and Health Officer (SSHO)

The SSHO must meet with requirements of EM 385-1-1 Section 1 and ensure that the requirements of 29 CFR 1926.16 are met for this project. Provide a Safety oversight team that includes a minimum of one (1) Competent Person at each project site to function as the Safety and Health Officer (SSHO). The SSHO or an equally-qualified designated representative/alternate shall be at the work site at all times to implement and administer the Contractor's safety program and government-accepted Accident Prevention Plan. The SSHO's training, experience, and qualifications shall be as required by EM 385-1-1 paragraph 01.A.17, entitled SITE SAFETY AND HEALTH OFFICER (SSHO), and all associated sub-paragraphs.

A Competent Person shall be provided for all of the hazards identified in the Contractor's Safety and Health Program in accordance with the accepted Accident Prevention Plan, and shall be on-site at all times when the work that presents the hazards associated with their professional expertise is being performed. Provide the credentials of the Competent Persons(s) to the Contracting Officer for acceptance in consultation with the Safety Office.

1.6.1.2 Competent Person for Confined Space Entry

Provide a "Competent Person" to supervise the entry into each confined space. That individual must meet the requirements and definition of Competent Person as contained in EM 385-1-1.

1.6.1.3 Crane Operators

Meet the crane operators' requirements in USACE EM 385-1-1, Section 16 and Appendix I. In addition, for mobile cranes with Original Equipment Manufacturer (OEM) rated capacitates of 2,000 pounds or greater, designate crane operators as qualified by a source that qualifies crane operators (i.e., union, a government agency, or an organization that tests and qualifies crane operators). Provide proof of current qualification. In addition, the Contractor shall comply with Contractor Operated Crane Requirements included in the latest revision of document NAVFAC P-307 Section 1.7.2 "Contractor Operated Cranes," and Appendix P, Figure P-1 and with 29 CFR 1926, Subpart CC.

1.6.2 Personnel Duties

1.6.2.1 Site Safety and Health Officer (SSHO)

The SSHO shall:

a. Conduct daily safety and health inspections and maintain a written log

which includes area/operation inspected, date of inspection, identified hazards, recommended corrective actions, estimated and actual dates of corrections. Attach safety inspection logs to the Contractors' daily production or quality control report.

b. Conduct mishap investigations and complete required reports. Maintain the OSHA Form 300 and Daily Production reports for prime and sub-contractors.

c. Maintain applicable safety reference material on the job site.

d. Attend the pre-construction conference, pre-work meetings including preparatory inspection meeting, and periodic in-progress meetings.

e. Implement and enforce accepted APP's and AHA's.

f. Maintain a safety and health deficiency tracking system that monitors outstanding deficiencies until resolution. Post a list of unresolved safety and health deficiencies on the safety bulletin board.

g. Ensure sub-contractor compliance with safety and health requirements.

h. Maintain a list of hazardous chemicals on site and their Safety Data Sheet (SDS).

Failure to perform the above duties will result in dismissal of the Project Superintendent, QC Manager, and/or SSHO, and a project work stoppage. The project work stoppage will remain in effect pending approval of a suitable replacement.

1.6.3 Meetings

1.6.3.1 Preconstruction Conference

a. Contractor representatives who have a responsibility or significant role in accident prevention on the project shall attend the preconstruction conference. This includes the Project Superintendent, Site Safety and Health Officer, Quality Control Manager, or any other assigned safety and health professionals who participated in the development of the APP (including the Activity Hazard Analyses (AHAs) and special plans, program and procedures associated with it).

b. Discuss the details of the submitted APP to include incorporated plans, programs, procedures and a listing of anticipated AHAs that will be developed and implemented during the performance of the contract. This list of proposed AHAs will be reviewed at the conference and an agreement will be reached between the Contractor and the Contracting Officer's representative as to which phases will require an analysis. In addition, establish a schedule for the preparation, submittal, review, and acceptance of AHAs to preclude project delays.

c. Deficiencies in the submitted APP will be brought to the attention of the Contractor at the preconstruction conference, and the Contractor shall revise the plan to correct deficiencies and re-submit it for acceptance. Do not begin work until there is an accepted APP.

1.6.3.2 Safety Meetings

Conduct and document meetings as required by EM 385-1-1. Attach minutes showing contract title, signatures of attendees and a list of topics discussed to the Contractors' daily production or quality control report.

1.7 ACCIDENT PREVENTION PLAN (APP)

Use a qualified person to prepare the written site-specific APP. Prepare the APP in accordance with the format and requirements of USACE EM 385-1-1 and as supplemented herein. Cover all paragraph and subparagraph elements in USACE EM 385-1-1, Appendix A, "Minimum Basic Outline for Accident Prevention Plan". Specific requirements for some of the APP elements are described below. The APP shall be job-specific and address any unusual or unique aspects of the project or activity for which it is written. The APP shall interface with the Contractor's overall safety and health program. Include any portions of the Contractor's overall safety and health program referenced in the APP in the applicable APP element and made site-specific. The Government considers the Prime Contractor to be the "controlling authority" for all work site safety and health of the subcontractors. Contractors are responsible for informing their subcontractors of the safety provisions under the terms of the contract and the penalties for noncompliance, coordinating the work to prevent one craft from interfering with or creating hazardous working conditions for other crafts, and inspecting subcontractor operations to ensure that accident prevention responsibilities are being carried out. The APP shall be signed by the person and firm (senior person) preparing the APP, the Contractor, the on-site superintendent, the designated Site Safety and Health Officer, the Contractor Quality Control Manager, and any designated CSP or CIH.

Submit the APP to the Contracting Officer 15 calendar days prior to the date of the preconstruction conference for acceptance. Work cannot proceed without an accepted APP.

Once accepted by the Contracting Officer, the APP and attachments will be enforced as part of the contract. Disregarding the provisions of this contract or the accepted APP will be cause for stopping of work, at the discretion of the Contracting Officer, until the matter has been rectified.

Once work begins, changes to the accepted APP shall be made with the knowledge and concurrence of the Contracting Officer, Project Superintendent, SSHO and Quality Control Manager. Should any severe hazard exposure (i.e., imminent danger) become evident, stop work in the area, secure the area, and develop a plan to remove the exposure and control the hazard. Notify the Contracting Officer within 24 hours of discovery. Eliminate/remove the hazard. In the interim, take all necessary action to restore and maintain safe working conditions in order to safeguard onsite personnel, visitors, the public (as defined by ASSE/SAFE A10.34,) and the environment.

Copies of the accepted plan will be maintained at the Contracting Officer's office and at the job site.

Continuously review and amended the APP, as necessary, throughout the life of the contract. Incorporate unusual or high-hazard activities not identified in the original APP as they are discovered.

1.7.1 EM 385-1-1 Contents

In addition to the requirements outlines in Appendix A of USACE EM 385-1-1, the following is required:

a. Names and qualifications (resumes including education, training, experience and certifications) of all site safety and health personnel designated to perform work on this project to include the designated Site Safety and Health Officer and other competent and qualified personnel to be used such as CSPs, CIHs, STSs, CHSTs. Specify the duties of each position.

b. Qualifications of competent and of qualified persons: As a minimum, designate and submit qualifications of competent persons for each of the following major areas: excavation; scaffolding; fall protection; hazardous energy; confined space; health hazard recognition, evaluation and control of chemical, physical and biological agents; personal protective equipment and clothing to include selection, use and maintenance.

c. Confined Space Entry Plan: Develop a confined and/or enclosed space entry plan in accordance with USACE EM 385-1-1, applicable OSHA standards 29 CFR 1910, 29 CFR 1915, and 29 CFR 1926, OSHA Directive CPL 2.100, and any other Federal, State and local regulatory requirements identified in this contract. Identify the qualified person's name and qualifications, training, and experience. Delineate the qualified person's authority to direct work stoppage in the event of hazardous conditions. Include procedure for rescue by Contractor personnel and the coordination with emergency responders. (If there is no confined space work, include a statement that no confined space work exists and none will be created.)

d. Crane Critical Lift Plan: Prepare and sign weight handling critical lift plans for lifts over 75 percent of the capacity of the crane or hoist at any radius of lift; lifts involving more than one crane or hoist; lifts of personnel; and lifts involving non-routine rigging or operation, sensitive equipment, or unusual safety risks. Submit 15 calendar days prior to on-site work and include the requirements of USACE EM 385-1-1, paragraph 16.H. and the following:

   (1) For lifts of personnel, demonstrate compliance with the requirements of 29 CFR 1926.550(g).

e. Fall Protection and Prevention (FP&P) Program Documentation: The Program Documentation shall be site specific and address all fall hazards in the work place and during different phases of construction. Address how to protect and prevent workers from falling to lower levels when they are exposed to fall hazards above 6 feet in height. A qualified person for fall protection shall prepare and sign the Program Documentation. Include fall protection and prevention systems, equipment and methods employed for every phase of work, responsibilities, assisted rescue, self-rescue and evacuation procedures, training requirements, and monitoring methods. Revise the Fall Protection and Prevention Program Documentation every six months for lengthy projects, reflecting any changes during the course of construction due to changes in personnel, equipment, systems or work habits. Keep and maintain the accepted Fall Protection and Prevention Program Documentation at the job site for the duration of the project. Include the Fall Protection and Prevention Program

Documentation in the Accident Prevention Plan (APP).

The FP&P Plan shall include a Rescue and Evacuation Plan in accordance with USACE EM 385-1-1, Section 21.M. The plan shall include a detailed discussion of the following: methods of rescue; methods of self-rescue; equipment used; training requirement; specialized training for the rescuers; procedures for requesting rescue and medical assistance; and transportation routes to a medical facility. Include the Rescue and Evacuation Plan in the Fall Protection and Prevention (FP&P) Plan, and as part of the Accident Prevention Plan (APP).

f. Lead Compliance Plan: The safety and health aspects of lead work, prepared in accordance with Section 02 83 13.00 22 LEAD IN CONSTRUCTION (PWD ME).

g. Asbestos Hazard Abatement Plan: The safety and health aspects of asbestos work, prepared in accordance with Section 02 82 16.00 22 ENGINEERING CONTROL OF ASBESTOS CONTAINING MATERIALS (PWD ME).

h. Site Demolition Plan: The safety and health aspects prepared in accordance with Section 02 41 00 DEMOLITION AND DECONSTRUCTION and references sources. Include engineering survey as applicable.

i. Excavation Plan: The safety and health aspects prepared in accordance with Section 31 23 00.00 22(PNSY) EXCAVATION AND FILL (PWD ME).

1.8 ACTIVITY HAZARD ANALYSIS (AHA)

The Activity Hazard Analysis (AHA) format shall be in accordance with USACE EM 385-1-1, Section 1. Submit the AHA for review at least 5 calendar days prior to the phase preparatory meeting. Format subsequent AHAs as amendments to the APP. The analysis should be used during daily inspections to ensure the implementation and effectiveness of the Portsmouth Naval Shipyard's safety and health controls.

The AHA list will be reviewed periodically (at least monthly) at the Contractor supervisory safety meeting and updated as necessary when procedures, scheduling, or hazards change.

Develop the activity hazard analyses using the project schedule as the basis for the activities performed. Any activities listed on the project schedule will require an AHA. The AHAs will be developed by the Contractor, supplier or subcontractor and provided to the Prime Contractor for submittal to the Contracting Officer.

1.9 DISPLAY OF SAFETY INFORMATION

Within one calendar day after commencement of work, erect a safety bulletin board at the job site. Where size, duration, or logistics of project do not facilitate a bulletin board, an alternative method, acceptable to the Contracting Officer, that is accessible and includes all mandatory information for employee and visitor review, shall be deemed as meeting the requirement for a bulletin board. Include and maintain information on safety bulletin board as required by EM 385-1-1, Section 01.A.06. Additional items required to be posted include:

a. Confined space entry permit.

b. Hot work permit.

1.10 SITE SAFETY REFERENCE MATERIALS

Maintain safety-related references applicable to the project, including those listed in the article "References." Maintain applicable equipment manufacturer's manuals.

1.11 EMERGENCY MEDICAL TREATMENT

Contractors will arrange for their own emergency medical treatment. Government has no responsibility to provide emergency medical treatment.

1.12 NOTIFICATIONS AND REPORTS

1.12.1 Accident Notification

Notify the Contracting Officer as soon as practical, but not later than four hours after any accident meeting the definition of Recordable Injuries or Illnesses or High Visibility Accidents, property damage equal to or greater than $2,000, or any weight handling equipment accident. Ensure positive contact is made with GDA as voice mail and e-mail is not acceptable as official notification. Within notification include contractor name; contract title; type of contract; name of activity, installation or location where accident occurred; date and time of accident; names of personnel injured; extent of property damage, if any; extent of injury, if known, and brief description of accident (to include type of construction equipment used, PPE used, etc.). Preserve the conditions and evidence on the accident site until the Government investigation team arrives on-site and Government investigation is conducted.

1.12.2 Accident Reports

a. Conduct an accident investigation for recordable injuries and illnesses, for Medical Treatment defined in paragraph DEFINITIONS, property damage accidents resulting in at least $20,000 in damages, and near misses as defined in EM 385-1-1, to establish the root cause(s) of the accident. Complete the applicable NAVFAC Contractor Incident Reporting System (CIRS), and electronically submit via the NAVFAC Enterprise Safety Applications Management System (ESAMS). The Contracting Officer will provide copies of any required or special forms.

b. Near Misses: Complete the applicable documentation in NAVFAC Contractor Incident Reporting System (CIRS), and electronically submit via the NAVFAC Enterprise Safety Applications Management System (ESAMS).

c. Conduct an accident investigation for any weight handling equipment accident (including rigging gear accidents) to establish the root cause(s) of the accident, complete the WHE Accident Report (Crane and Rigging Gear) form and provide the report to the Contracting Officer within 30 calendar days of the accident. Do not proceed with crane operations until cause is determined and corrective actions have been implemented to the satisfaction of the Contracting Officer. The

Contracting Officer will provide a blank copy of the accident report form.

1.12.3 Crane Reports

Submit crane inspection reports required in accordance with USACE EM 385-1-1, Appendix I and as specified herein (Refer to ATTACHMENT "A"-"CONTRACTOR CRANE, MULTI-PURPOSE MACHINE, FORKLIFT, CONSTRUCTION EQUIPMENT, AND RIGGING GEAR REQUIREMENTS") with Daily Reports of Inspections.

1.12.4 Certificate of Compliance

Provide a Certificate of Compliance for each crane entering the Portsmouth Naval Shipyard under this contract (see Contracting Officer for a blank certificate). State within the certificate that the crane and rigging gear meet applicable OSHA regulations (with the Contractor citing which OSHA regulations are applicable, e.g., cranes used in construction, demolition, or maintenance comply with 29 CFR 1926 and USACE EM 385-1-1 Section 16 and Appendix I. Certify on the Certificate of Compliance that the crane operator(s) is qualified and trained in the operation of the crane to be used. Also certify that all of its crane operators working on the Portsmouth Naval Shipyard have been trained in the proper use of all safety devices (e.g., anti-two block devices). Post certifications on the crane.

1.13 HOT WORK

Submit and obtain a written permit prior to performing "Hot Work" (welding, cutting, etc.) or operating other flame-producing/spark producing devices, from the Portsmouth Naval Shipyard Fire Department. A permit is required from the Explosives Safety Office for work in and around where explosives are processed, stored, or handled. CONTRACTORS ARE REQUIRED TO MEET ALL CRITERIA BEFORE A PERMIT IS ISSUED. Provide at least one (1) 2A:20 BC rated extinguishers for normal "Hot Work". All extinguishers shall be current inspection tagged, approved safety pin and tamper resistant seal. It is also mandatory to have a designated FIRE WATCH for any "Hot Work" done at Portsmouth Naval Shipyard. The Fire Watch shall be trained in accordance with NFPA 51B and remain on-site for a minimum of 60 minutes after completion of the task or as specified on the hot work permit. Separate hot work permits will be issued for any Hot Asphalt roofing kettle.

When starting work in the facility, require personnel to familiarize themselves with the location of the nearest fire alarm boxes and place in memory the emergency Portsmouth Naval Shipyard Fire Department phone number. ANY FIRE, NO MATTER HOW SMALL, SHALL BE REPORTED TO THE PORTSMOUTH NAVAL SHIPYARD FIRE DEPARTMENT AND THE CONTRACTING OFFICER IMMEDIATELY.

Obtain services from a NFPA Certified Marine Chemist for "HOT WORK" within or around flammable materials (such as fuel systems, welding/cutting on fuel pipes) or confined spaces (such as sewer wet wells, manholes, vaults, etc.) that have the potential for flammable or explosive atmospheres.

1.14 RADIATION SAFETY REQUIREMENTS

License Certificates and other applicable information for radiation materials and equipment shall be submitted to the Contracting Officer and

Radiation Safety Office (RSO), and Contracting Oversight Technician (COT) for all specialized and licensed material and equipment that could cause fatal harm to construction personnel or to the construction project.

Complete list of requirements are available on the PWD Maine's Web site or available for the COTS representative.

https://portal.navfac.navy.mil/portal/page/portal/navfac/navfac_ww_pp/navfac_navfacmidlant_pp/pwbl/maine/construction:general%20contractor%20information:tab3

Workers shall be protected from radiation exposure in accordance with 10 CFR 20, Standards for Protection against Radiation.

Loss of radioactive material shall be reported immediately to the Contracting Officer.

Actual exposure of the radiographic film or un-shielding the source shall not be initiated until after 5 p.m. on weekdays.

In instances where radiography is scheduled near or adjacent to buildings or areas having limited access or one-way doors, no assumptions shall be made as to building occupancy. Where necessary, the Contracting Officer will direct the Contractor to conduct an actual building entry, search, and alert. Where removal of personnel from such a building cannot be accomplished and it is otherwise safe to proceed with the radiography, a fully instructed employee shall be positioned inside such building or area to prevent exiting while external radiographic operations are in process. Transportation of Regulated Amounts of Radioactive Material will comply with 49 CFR, Subchapter C, Hazardous Material Regulations. Local Fire authorities and the site Radiation Safety Officer (RSO) shall be notified of any Radioactive Material use.

Transmitter Requirements: The Portsmouth Naval Shipyard policy concerning the use of transmitters such as radios, cell phones, etc., must be adhered to by all Contractor personnel. They must also obey Emissions Control (EMCON) restrictions.

1.15 FACILITY OCCUPANCY CLOSURE

Streets, walks, and other facilities occupied and used by the Government shall not be closed or obstructed without written permission from the Contracting Officer.

1.16 SEVERE STORM PLAN

In the event of a severe storm warning, the Contractor must:

a. Secure outside equipment and materials and place materials that could be damaged in protected areas.

b. Check surrounding area, including roof, for loose material, equipment, debris, and other objects that could be blown away or against existing facilities.

c. Ensure that temporary erosion controls are adequate.

d. Comply with requirements as per EM-385 1-1 Section 06.I INCLEMENT WEATHER. Contracting Officer will notify Contractor of COR (Condition of Readiness level 1-5) for severe storms.

1.17 CONFINED SPACE ENTRY REQUIREMENTS.

Contractors entering and working in confined spaces while performing general industry work are required to follow the requirements of OSHA 29 CFR 1926 and comply with the requirements in Section 34 of EM 385-1-1 and OSHA 29 CFR 1910.146. Contractors entering and working in confined spaces while performing shipyard industry work are required to follow the requirements of OSHA 29 CFR 1915 Subpart B.

PART 2 PRODUCTS

2.1 CONFINED SPACE SIGNAGE

Provide permanent signs integral to or securely attached to access covers for new permit-required confined spaces. Signs wording: "DANGER--PERMIT-REQUIRED CONFINED SPACE - DO NOT ENTER -" in bold letters a minimum of one inch in height and constructed to be clearly legible with all paint removed. The signal word "DANGER" shall be red and readable from 5 feet.

PART 3 EXECUTIONS

3.1 CONSTRUCTION AND/OR OTHER WORK

Comply with USACE EM 385-1-1, NFPA 70, NFPA 70E, NFPA 241, the APP, the AHA, Federal and State OSHA regulations, and other related submittals and Portsmouth Naval Shipyard's fire and safety regulations. The most stringent standard prevails.

PPE is governed in all areas by the nature of the work the employee is performing. Use personal hearing protection at all times in designated noise hazardous areas or when performing noise hazardous tasks. Safety glasses must be carried/available on each person.

Mandatory PPE includes:

a. Hard Hat

b. Appropriate Safety Shoes

c. Reflective Vests

3.1.1 Hazardous Material Use

Each hazardous material must receive approval from the Contracting Officer or their designated representative prior to being brought onto the job site or prior to any other use in connection with this contract. Allow a minimum of 10 working days for processing of the request for use of a hazardous material.

3.1.2 Hazardous Material Exclusions

Notwithstanding any other hazardous material used in this contract, radioactive materials or instruments capable of producing ionizing/non-ionizing radiation (with the exception of radioactive material and devices used in accordance with USACE EM 385-1-1 such as nuclear density meters for compaction testing and laboratory equipment with radioactive sources) as well as materials which contain asbestos,

mercury or polychlorinated biphenyls, di-isocynates, lead-based paint are prohibited. The Contracting Officer, upon written request by the Contractor, may consider exceptions to the use of any of the above excluded materials. Low mercury lamps used within fluorescent lighting fixtures are allowed as an exception without further Contracting Officer approval. Notify the Radiation Safety Officer (RSO) prior to excepted items of radioactive material and devices being brought on Portsmouth Naval Shipyard.

3.1.3 Unforeseen Hazardous Material

The design should have identified materials such as PCB, lead paint, dust that could potentially be hazardous, and friable and non-friable asbestos and other OSHA regulated chemicals (i.e., 29 CFR Part 1910.1000). If additional material, not indicated, that may be hazardous to human health upon disturbance during construction operations is encountered, stop that portion of work and notify the Contracting Officer immediately. Within 14 calendar days the Government will determine if the material is hazardous. If material is not hazardous or poses no danger, the Government will direct the Contractor to proceed without change. If material is hazardous and handling of the material is necessary to accomplish the work, the Government will issue a modification pursuant to "FAR 52.243-4, Changes" and "FAR 52.236-2, Differing Site Conditions."

3.2 PRE-OUTAGE COORDINATION MEETING

Apply for utility outages at least 15 calendar days in advance. As a minimum, the request should include the location of the outage, utilities being affected, duration of outage and any necessary sketches. Special requirements for electrical outage requests are contained elsewhere in this specification section. Once approved, and prior to beginning work on the utility system requiring shut down, attend a pre-outage coordination meeting with the Contracting Officer to review the scope of work and the lock-out/tag-out procedures for worker protection. No work will be performed on energized electrical circuits unless proof is provided that no other means exist and Contracting Officer written approval is obtained.

3.3 CONTROL OF HAZARDOUS ENERGY (LOCKOUT/TAGOUT)

Ensure that each employee is familiar with and complies with these procedures and USACE EM 385-1-1, Section 12, Control of Hazardous Energy and 29 CFR 1910.147.

Contracting Officer will, at the Contractor's request, apply lockout/tag-out tags and take other actions that, because of experience and knowledge, are known to be necessary to make the particular equipment safe to work on.

No person, regardless of position or authority, shall operate any switch, valve, or equipment that has an official lockout/tag-out tag attached to it, nor shall such tag be removed except as provided in this section.

No person shall work on any equipment that requires a lockout/tag-out tag unless he, his immediate supervisor, project leader, or a subordinate has in his possession the stubs of the required lockout/tag-out tags.

When work is to be performed on electrical circuits, only qualified personnel shall perform work on electrical circuits.

A supervisor who is required to enter an area protected by a lockout/tag-out tag will be considered a member of the protected group provided he notifies the holder of the tag stub each time he enters and departs from the protected area.

Shipyard and NAVFAC Personnel use a red lock and a red tag to indicate personnel are working on the systems. Use of a red lock and a red tag is highly encouraged to maintain continuity throughout the installation. The use of another colored locks and tags (blue for Shipyard workers and Yellow for NAVFAC personnel) indicate that the system is out of service for some reason.

Identification markings on building light and power distribution circuits shall not be relied on for established safe work conditions.

Before clearance will be given on any equipment other than electrical (generally referred to as mechanical apparatus), the apparatus, valves, or systems shall be secured in a passive condition with the appropriate vents, pins, and locks.

Pressurized or vacuum systems shall be vented to relieve differential pressure completely.

Vent valves shall be tagged open during the course of the work.(PNSY)

Where dangerous gas or fluid systems are involved, or in areas where the environment may be oxygen deficient, system or areas shall be purged, ventilated, or otherwise made safe prior to entry.

3.3.1 Tag Placement(PNSY)

Lockout/tag-out tags shall be completed in accordance with the regulations printed on the back thereof and attached to any device which, if operated, could cause an unsafe condition to exist.

If more than one group is to work on any circuit or equipment, the employee in charge of each group shall have a separate set of lockout/tag-out tags completed and properly attached.

When it is required that certain equipment be tagged, the Government will review the characteristics of the various systems involved that affect the safety of the operations and the work to be done; take the necessary actions, including voltage and pressure checks, grounding, and venting, to make the system and equipment safe to work on; and apply such lockout/tag-out tags to those switches, valves, vents, or other mechanical devices needed to preserve the safety provided. This operation is referred to as "Providing Safety Clearance."

3.3.2 Tag Removal (PNSY)

When any individual or group has completed its part of the work and is clear of the circuits or equipment, the supervisor, project leader, or individual for whom the equipment was tagged shall turn in his signed lockout/tag-out tag stub to the Contracting Officer. That group's or individual's lockout/tag-out tags on equipment may then be removed on authorization by the Contracting Officer.

3.4 FALL HAZARD PROTECTION AND PREVENTION PROGRAM

Establish a fall protection and prevention program, for the protection of all employees exposed to fall hazards. Within the program include company policy, identify responsibilities, education and training requirements, fall hazard identification, prevention and control measures, inspection, storage, care and maintenance of fall protection equipment and rescue and evacuation procedures.

3.4.1 Training

Institute a fall protection training program. As part of the Fall Hazard Protection and Prevention Program, provide training for each employee who might be exposed to fall hazards. Provide training by a competent person for fall protection in accordance with USACE EM 385-1-1, Section 21.B.

3.4.2 Fall Protection Equipment and Systems

Enforce use of the fall protection equipment and systems designated for each specific work activity in the Fall Protection and Prevention Plan and/or AHA at all times when an employee is exposed to a fall hazard. Protect employees from fall hazards as specified in EM 385-1-1, Section 21. In addition to the required fall protection systems, safety skiff, personal floatation devices, life rings etc., are required when working above or next to water in accordance with USACE EM 385-1-1, Paragraphs 21.N through 21.N.04. Personal fall arrest systems are required when working from an articulating or extendible boom, swing stages, or suspended platform. In addition, personal fall arrest systems are required when operating other equipment such as scissor lifts if the work platform is capable of being positioned outside the wheelbase. The need for tying-off in such equipment is to prevent ejection of the employee from the equipment during raising, lowering, or travel. Fall protection must comply with 29 CFR 1926.500, Subpart M, USACE EM 385-1-1 and ASSE/SAFE A10.32.

3.4.2.1 Personal Fall Arrest Equipment

Personal fall arrest equipment, systems, subsystems, and components shall meet ASSE/SAFE Z359.1. Only a full-body harness with a shock-absorbing lanyard or self-retracting lanyard is an acceptable personal fall arrest body support device. Body belts may only be used as a positioning device system (for uses such as steel reinforcing assembly and in addition to an approved fall arrest system). Harnesses shall have a fall arrest attachment affixed to the body support (usually a Dorsal D-ring) and specifically designated for attachment to the rest of the system. Only locking snap hooks and carabineers shall be used. Webbing, straps, and ropes shall be made of synthetic fiber. The maximum free fall distance when using fall arrest equipment shall not exceed 6 feet. The total fall distance and any swinging of the worker (pendulum-like motion) that can occur during a fall shall always be taken into consideration when attaching a person to a fall arrest system.

3.4.3 Fall Protection for Roofing Work

Implement fall protection controls based on the type of roof being constructed and work being performed. Evaluate the roof area to be accessed for its structural integrity including weight-bearing capabilities for the projected loading.

a. Low Sloped Roofs:

(1) For work within 6 feet of an edge, on low-slope roofs, protect personnel from falling by use of personal fall arrest systems, guardrails, or safety nets. A safety monitoring system is not adequate fall protection and is not authorized.

(2) For work greater than 6 feet from an edge, erect and install warning lines in accordance with 29 CFR 1926.500 and USACE EM 385-1-1.

b. Steep-Sloped Roofs: Work on steep-sloped roofs requires a personal fall arrest system, guardrails with toe-boards, or safety nets. This requirement also includes residential or housing type construction.

3.4.4 Existing Anchorage

Certified (or re-certified) by a qualified person for fall protection existing anchorages, to be used for attachment of personal fall arrest equipment in accordance with ASSE/SAFE Z359.1. Existing horizontal lifeline anchorages must be certified (or re-certified) by a registered professional engineer with experience in designing fall arrest anchorage systems.

3.4.5 Horizontal Lifelines

Design, install, certify and use under the supervision of a qualified person horizontal lifelines for fall protection as part of a complete fall arrest system which maintains a safety factor of 2 (29 CFR 1926.500).

3.4.6 Guardrails and Safety Nets

Design, install and use guardrails and safety nets in accordance with EM 385-1-1 and 29 CFR 1926 Subpart M.

3.4.7 Rescue and Evacuation Procedures

When personal fall arrest systems are used, ensure that the mishap victim can self-rescue or can be rescued promptly should a fall occur. Prepare a Rescue and Evacuation Plan and include a detailed discussion of the following: methods of rescue; methods of self-rescue; equipment used; training requirement; specialized training for the rescuers; procedures for requesting rescue and medical assistance; and transportation routes to a medical facility. Include the Rescue and Evacuation Plan within the Activity Hazard Analysis (AHA) for the phase of work, in the Fall Protection and Prevention (FP&P) Plan, and the Accident Prevention Plan (APP).

3.5 SHIPYARD REQUIREMENTS

All personnel who enter the Controlled Industrial Area (CIA) of Portsmouth Naval Shipyard shall wear mandatory personal protective equipment (PPE) at all times and comply with PPE postings of shops both inside and outside the CIA.

3.6 SCAFFOLDING

Provide employees with a safe means of access to the work area on the scaffold. A scaffolding competent person shall be present observing

erecting, moving, altering, or dismantling any scaffold. Climbing of any scaffold braces or supports not specifically designed for access is prohibited. Access scaffold platforms greater than 20 feet maximum in height by use of a scaffold stair system. Do not use vertical ladders commonly provided by scaffold system manufacturers for accessing scaffold platforms greater than 20 feet maximum in height. The use of an adequate gate is required. Ensure that employees are qualified to perform scaffold erection and dismantling. Do not use scaffold without the capability of supporting at least four times the maximum intended load or without appropriate fall protection as delineated in the accepted fall protection and prevention plan. Stationary scaffolds must be attached to structural building components to safeguard against tipping forward or backward. Give special care to ensure scaffold systems are not overloaded. Side brackets used to extend scaffold platforms on self-supported scaffold systems for the storage of material are prohibited. The first tie-in shall be at the height equal to 4 times the width of the smallest dimension of the scaffold base. Place work platforms on mud sills. Scaffold or work platform erectors shall have fall protection during the erection and dismantling of scaffolding or work platforms that are more than six feet in height. Delineate fall protection requirements when working above six feet or above dangerous operations in the Fall Protection and Prevention (FP&P) Plan and Activity Hazard Analysis (AHA) for the phase of work.

3.6.1 Stilts

The use of stilts for gaining additional height in construction, renovation, repair or maintenance work is prohibited.

3.7 EQUIPMENT

3.7.1 Material Handling Equipment

a. Material handling equipment such as forklifts shall not be modified with work platform attachments for supporting employees unless specifically delineated in the manufacturer's printed operating instructions.

b. The use of hooks on equipment for lifting of material must be in accordance with manufacturer's printed instructions. Additionally, when material handling equipment is used as a crane it must meet NAVFAC P-307 requirements in paragraphs entitled "Contractor Operated Cranes," an "Investigation and Reporting of Crane and Rigging Gear Accidents."

c. Operators of forklifts or power industrial trucks shall be licensed in accordance with OSHA.

3.7.2 Weight Handling Equipment

a. Equip cranes and derricks as specified in EM 385-1-1, Section 16.

b. Notify the Contracting Officer 15 days in advance of any cranes entering the Portsmouth Naval Shipyard so that necessary quality assurance spot checks can be coordinated. Contractor's operator shall remain with the crane during the spot check. (Refer to ATTACHMENT "A" - "CONTRACTOR CRANE, MULTI-PURPOSE MACHINE, FORKLIFT, CONSTRUCTION EQUIPMENT, AND RIGGING GEAR REQUIREMENTS.")

c. Comply with the crane manufacturer's specifications and limitations for erection and operation of cranes and hoists used in support of the work. Perform erection under the supervision of a designated person (as defined in ASME B30.5). Perform all testing in accordance with the manufacturer's recommended procedures.

d. Comply with ASME B30.5 for mobile and locomotive cranes, ASME B30.22 for articulating boom cranes, ASME B30.3 for construction tower cranes, and ASME B30.8 for floating cranes and floating derricks.

e. Under no circumstance shall a Contractor make a lift at or above 90 percent of the cranes rated capacity in any configuration.

f. When operating in the vicinity of overhead transmission lines, operators and riggers shall be alert to this special hazard and follow the requirements of USACE EM 385-1-1 section 11 and ASME B30.5 or ASME B30.22 as applicable.

g. Do not crane suspended personnel work platforms (baskets) unless the Contractor proves that using any other access to the work location would provide a greater hazard to the workers or is impossible. Do not lift personnel with a line hoist or friction crane.

h. Inspect, maintain, and recharge portable fire extinguishers as specified in NFPA 10, Standard for Portable Fire Extinguishers.

i. All employees must keep clear of loads about to be lifted and of suspended loads.

j. Use cribbing when performing lifts on outriggers.

k. The crane hook/block must be positioned directly over the load. Side loading of the crane is prohibited.

l. A physical barricade must be positioned to prevent personnel from entering the counterweight swing (tail swing) area of the crane.

m. Certification records which include the date of inspection, signature of the person performing the inspection, and the serial number or other identifier of the crane that was inspected shall always be available for review by Contracting Officer personnel.

n. Written reports listing the load test procedures used along with any repairs or alterations performed on the crane shall be available for review by Contracting Officer personnel.

o. Certify that all crane operators have been trained in proper use of all safety devices (e.g. anti-two block devices).

p. Take steps to ensure that wind speed does not contribute to loss of control of the load during lifting operations. Prior to conducting lifting operations set a maximum wind speed at which a crane can be safely operated based on the equipment being used, the load being lifted, experience of operators and riggers, and hazards on the work site. This maximum wind speed determination shall be included as part of the activity hazard analysis plan for that operation.

3.7.3 Equipment and Mechanized Equipment

a. Proof of qualifications for operator shall be kept on the project site for review.

b. Manufacture specifications or owner's manual for the equipment shall be on-site and reviewed for additional safety precautions or requirements that are sometimes not identified by OSHA or USACE EM 385-1-1. Incorporate such additional safety precautions or requirements into the AHAs.

3.7.4 USE OF EXPLOSIVES

Use of Explosives is not allowed on Portsmouth Naval Shipyard.

3.8 EXCAVATIONS

Perform soil classification by a competent person in accordance with 29 CFR 1926 and EM 385-1-1.

a. Trenching Machinery:

Operate trenching machines with digging chain drives only when the spotters/laborers are in plain view of the operator. Provide operator and spotters/laborers training on the hazards of the digging chain drives with emphasis on the distance that needs to be maintained when the digging chain is operating. Keep documentation of the training on file at the project site.

b. Shoring Systems:

Trench and shoring systems must be identified in the accepted safety plan and AHA. Manufacture tabulated data and specifications or registered engineer tabulated data for shoring or benching systems shall be readily available on-site for review. Job-made shoring or shielding must have the registered professional engineer stamp, specifications, and tabulated data. Extreme care must be used when excavating near direct burial electric underground cables.

3.8.1 Utility Locations

All underground utilities in the work area must be positively identified by a third party, independent, private utility locating company (cannot be the Government's locating company) in addition to any Portsmouth Naval Shipyard location service and coordinated with the Portsmouth Naval Shipyard utility department.

For work completed at the Portsmouth Naval Shipyard, See Attachment B - "PORTSMOUTH NAVAL SHIPYARD UTILITY LOCATING PROCEDURES."

3.8.2 Utility Location Verification

Physically verify underground utility locations, including utility depth, by hand digging using wood or fiberglass handled tools when any adjacent construction work is expected to come within three feet of the underground system.

3.8.3 Utilities Within and Under Concrete Slabs, Bituminous Asphalt and Other Impervious Surfaces

Utilities located within and under concrete slabs or pier structures, bridges, parking areas, and the like, are extremely difficult to identify. Whenever contract work involves chipping, saw cutting, or core drilling through concrete, bituminous asphalt or other impervious surfaces, the existing utility location must be coordinated with station utility departments in addition to location and depth verification by a third party, independent, private locating company. The third party, independent, private locating company shall locate utility depth by use of Ground Penetrating Radar (GPR), bore scope, or ultrasound prior to the start of demolition and construction. Outages to isolate utility systems must be used in circumstances where utilities are unable to be positively identified. The use of historical drawings does not alleviate the Contractor from meeting this requirement. Any markings made during the utility investigation must be maintained throughout the contract.

3.9 ELECTRICAL

3.9.1 Conduct of Electrical Work

Underground electrical spaces must be certified safe for entry before entering to conduct work. Cables that will be cut must be positively identified and de-energized prior to performing each cut. Positive cable identification must be made prior to submitting any outage request for electrical systems. Arrangements are to be coordinated with the Contracting Officer and Portsmouth Naval Shipyard Utilities for identification. The Contracting Officer will not accept an outage request until the Contractor satisfactorily documents that the circuits have been clearly identified. Perform all high voltage cable cutting remotely using hydraulic cutting tool. When racking in or live switching of circuit breakers, no additional person other than the switch operator will be allowed in the space during the actual operation. Plan so that work near energized parts is minimized to the fullest extent possible. Use of electrical outages clear of any energized electrical sources is the preferred method. When working in energized substations, only qualified electrical workers will be permitted to enter. When work requires Contractor to work near energized circuits as defined by the NFPA 70, high voltage personnel must use personal protective equipment that includes, as a minimum, electrical hard hat, safety shoes, insulating gloves with leather protective sleeves, fire retarding shirts, coveralls, face shields, and safety glasses. In addition, provide electrical arc flash protection for personnel as required by NFPA 70E. Insulating blankets, hearing protection, and switching suits may also be required, depending on the specific job and as delineated in the Contractor's AHA.

3.9.2 Portable Extension Cords

Size portable extension cords in accordance with manufacturer ratings for the tool to be powered and protected from damage. Immediately remove from service all damaged extension cords. Portable extension cords shall meet the requirements of EM 385-1-1, NFPA 70E, and OSHA electrical standards.

3.10 WORK IN CONFINED SPACES

Comply with the requirements in Section 34 of USACE EM 385-1-1, OSHA 29 CFR 1910, OSHA 29 CFR 1910.146, OSHA Directive CPL 2.100 and OSHA 29 CFR 1926. Any potential for a hazard in the confined space requires a

permit system to be used.

a. Entry Procedures. Prohibit entry into a confined space by personnel for any purpose, including hot work, until the qualified person has conducted appropriate tests to ensure the confined or enclosed space is safe for the work intended and that all potential hazards are controlled or eliminated and documented. (See Section 34 of USACE EM 385-1-1 for entry procedures.) All hazards pertaining to the space shall be reviewed with each employee during review of the AHA.

b. Forced air ventilation is required for all confined space entry operations and the minimum air exchange requirements must be maintained to ensure exposure to any hazardous atmosphere is kept below its' action level.

c. Sewer wet wells require continuous atmospheric monitoring with audible alarms for oxygen, a flammable gas (methane preferably), hydrogen sulfide and carbon monoxide.

-- End of Section --

SECTION 01 35 26 – ATTACHMENT A

CONTRACTOR CRANE, MULTI-PURPOSE MACHINE, FORKLIFT, CONSTRUCTION EQUIPMENT, AND RIGGING GEAR REQUIREMENTS

1 CONTRACTOR CRANE, MULTI-PURPOSE MACHINE, FORKLIFT, CONSTRUCTION EQUIPMENT, AND RIGGING GEAR REQUIREMENTS

1.1 The following is a list of requirements that contractors shall comply with for all contracts that may result in the use of a category 1 or 4 crane, multi-purpose machines, forklifts, construction equipment, and rigging gear when used on Navy property to lift suspended loads. Non-compliance with the requirements of this instruction may result in denial of access, stopping of operations, or removal from Navy property.

1.2 References:

1.2.1 NAVFAC P-307, Management of Weight Handling Equipment

1.2.2 American Society of Mechanical Engineers (ASME) B30.3 (tower cranes), B30.5 (mobile cranes), B30.8 (floating cranes), B30.9 (slings), B30.20 (below the hook lifting devices), B30.22 (articulating booms), B30.26 (rigging hardware); ANSI/ITSDF B56.6 (rough terrain forklifts); Safety Standards for Cableways, Cranes, Derricks, Hoists, Hooks, Jacks, and Slings

1.2.3 CFR, Title 29, Chapter XVII, Part 1917, Marine Terminals.

1.2.4 CFR, Title 29, Chapter XVII, Part 1926, Safety and Health Regulations for Construction

1.2.5 CFR, Title 29, Chapter XVII, Part 1915, Occupational Safety and Health Standards for Shipyard Employment

1.2.6 OPNAVINST 5100.23, Navy Safety and Occupational Health Program Manual

1.2.7 EM 385-1-1, Safety and Health Requirements Manual, U.S. Army Corps of Engineers

1.2.8 NAVFAC Guide Specification NFGS-01525D, Safety Requirements

1.3 These requirements are solely intended to provide for the protection of Government property and personnel and are not intended to, and do not, in any manner whatsoever, relieve the contractor of its responsibility, including, without limitation, its responsibility for the protection of its equipment and personnel.

1.4 Notification Requirement: Contractor shall notify the Contracting Officer 7 calendar days in advance of the intent of bringing a non-Navy owned crane onto Navy property or of any multi-purpose machines, material handling equipment, or construction equipment that may be used in a crane-like application to lift suspended loads. The contractor shall also specify when crane entry onto Navy property is scheduled during back shift, weekend, or holiday hours of operation. All entries shall be through a prearranged entry point. The following documentation shall be provided along with notification: a copy of the Certification of Compliance (reference 1.2.1) and objective evidence of operator qualifications for cranes with rated capacities of 2,000 lbs. or greater. Failure to schedule or provide necessary documentation may result in the crane being denied access to the facility.

1.5 The contractor shall comply with applicable reference 1.2.2 standards (e.g., B30.3 for construction tower cranes, B30.5 for mobile cranes, B30.8 for floating cranes, B30.9 for slings, B30.20 for below the hook lifting devices, and B30.22 for articulating boom cranes), B30.26 for rigging hardware, and ANSI/ITSDF B56.6 for rough terrain forklifts). For barge mounted mobile cranes, require a third party certification from an OSHA accredited organization (or from a state accredited organization for those states with OSHA approved state plans), a load indicating device, a wind-indicating device, and a marine type list and trim indicator readable in one-half degree increments. Third party certification is not required for barge-mounted mobile cranes at naval activities in foreign countries.

1.6 Certification of Compliance (reference 1.2.1): The contractor shall complete a certificate of compliance that the crane (or other machine if used to lift suspended loads) and rigging gear meet applicable OSHA and ANSI/ASME regulations (with the contractor citing which OSHA regulations are applicable, e.g., cranes/multi-purpose machines used in cargo transfer shall comply with reference 1.2.3; cranes/multi-purpose machines used in construction, demolition, or maintenance shall comply with reference 1.2.4; cranes/multi-purpose machines used in ship repair shall comply with reference 1.2.5; slings shall comply with ASME B30.9; rigging hardware shall comply with ASME B30.26). For cranes (or other machine if used to lift suspended loads) and rigging equipment at naval activities in foreign countries, the contractor shall certify that the crane and rigging gear conform to the appropriate host country safety standards. The contractor shall also certify that all of its crane (or other machine) operators working on the naval activity have been trained not to bypass safety devices (e.g., anti-two block devices) during lifting operations, and that its operators, riggers, and company officials are aware of the actions required in the event of an accident as specified in the contract. Require that the certifications be posted on the crane. When a crane on Navy property is not authorized for use, the Certification of Compliance shall state, "Operation of this Crane is NOT Authorized."

1.7 The contractor shall certify (reference 1.2.1) that the crane or machine operator is qualified and trained for the operation of the crane to be used. For mobile and commercial truck mounted cranes with OEM rated capacities of greater than 2,000 pounds, the crane operator shall be designated as qualified by a source that qualifies crane operators (i.e., a union, a government agency, or an organization that tests and qualifies crane operators). Proof of current qualification shall be provided.

1.8 For multi-purpose machines, material handling equipment and construction equipment used to lift loads suspended by rigging equipment, the contractor shall have proof or authorization from the machine OEM that the machine is capable of making lifts of loads suspended by rigging equipment. The contractor shall demonstrate that the equipment is properly configured to make such lifts and is equipped with a load chart.

1.9 All hooks used on cranes, hoists, other machines, and rigging gear shall have self-closing latches or the throat opening shall be "moused" (secured with wire, rope, heavy tape, etc.) or otherwise secured to prevent the attached item from coming free of the hook under a slack condition. The following exceptions apply and shall be approved by the contractor's technical organization: items where the hook throat is fully obstructed and not available for manual securing and lifts where securing the hook throat increases the danger to personnel such as forge shop, dip tank, or underwater work.

1.10 Loading Limitations:

CAUTION: Piers and waterfront areas such as along dry docks and quay walls may have load restrictions.

1.10.1 The contractor shall notify the Contracting Officer prior to moving a crane on a pier, dry dock, or other waterfront area. Provide the Contracting Officer with the crane make, model, and configuration in which it is to be used.

1.10.2 The contractor shall comply with crane access routes and load limitations issued with the contract.

1.10.3 Allowable Surface Loads. Loads transferred to soils and pavements shall be minimized to a desired maximum of 3000 pounds per square foot, by placement of cribbing or steel pads under rubber-tired crane outriggers and trailer stanchions/sand shoes, or by placement of mats under treads of crawler cranes. Visually inspect areas adjacent to cribbing or plates and report any unusual bituminous pavement surface conditions, irregularities, or cracking to the Contracting Officer.

1.10.3.1 Outriggers of rubber-tired cranes shall be landed on two layers of timbers of appropriate thickness, oriented at right angles to each other, or landed on properly designed steel pads. Treads of crawler cranes shall run on appropriate mats. Use and design of cribbing, plates and mats shall be in a manner consistent with general construction industry standards.

1.10.3.2 Position loads that will remain on trailers detached from tractors to attain a distribution of 65 percent to rear axles and 35 percent to front support stanchions/sand shoes. For example, assuming an 83000 pound maximum gross weight and a soil bearing pressure of 3000 pounds per square foot, the required support under each sand shoe would be 2.5 feet x 2.5 feet. Accordingly, two tiers of timber cribbing at right angles, each 2.5 feet x 2.5 feet x 4 inches, or a properly designed 2.5 feet x 2.5 feet steel pad would be utilized under each trailer stanchion/ sand shoe.

1.11 Prior to making any critical lift, the contractor shall provide a critical lift plan for each of the following lifts: lifts over 75 percent of the capacity of the crane, hoist, or other machine (50 percent of the capacity of a barge mounted mobile crane's hoists) at any radius of lift; lifts involving more than one crane, hoist, or other machine; lifts of personnel (lifts of personnel suspended by rigging equipment from multi-purpose machines, material handling equipment, or construction equipment shall not be permitted); lifts made in the vicinity of overhead power lines; erection of cranes; and lifts involving non-routine rigging or operation, sensitive equipment, or unusual safety risks. The plan shall include the following as applicable:

1.11.1 The size and weight of the load to be lifted, including crane (or other machine) and rigging equipment that add to the weight. The OEM's maximum load capacities for the entire range of the lift shall also be provided.

1.11.2 The lift geometry, including the crane (or other machine) position, boom length and angle, height of lift, and radius for the entire range of the lift. Applies to both single and tandem crane/machine lifts.

1.11.3 A rigging plan, showing the lift points, rigging equipment, and rigging procedures.

1.11.4 The environmental conditions under which lift operations are to be stopped.

1.11.5 For lifts of personnel, the plan shall demonstrate compliance with the requirements of reference

1.11.6 For barge mounted mobile cranes, barge stability calculations identifying crane placement/footprint; barge list and trim based on anticipated loading; and load charts based on calculated list and trim specific to the barge the crane is mounted on. The amount of list and trim shall be within the crane manufacturer's requirements.

1.11.7 For lifts in the vicinity of overhead power lines (i.e., if any part of the crane or other machine, including the fully extended boom of a telescoping boom crane or machine, or the load could approach the distances noted in figure 10-3 of reference 1.2.1 during a proposed operation), the plan shall demonstrate compliance to 29 CFR 1926.550(a)(15).

1.12 The following additional documentation is required for contractor provided tower cranes (those cranes defined by ASME B30.3).

1.12.1 Foundation design and requirements

1.12.2 Installation instructions 1.12.4

1.12.3 Assembly and disassembly instructions including climbing/jumping instructions if applicable

1.12.4 Operating manual, limitations, and precautions

1.12.5 Periodic inspection and maintenance requirements

1.13 <u>Crane and Rigging Gear Accident Reporting and Record Keeping</u>: Contractor's operating cranes on Navy property shall report all WHE accidents that occur incidental to an operation, project, or facility as

prescribed by paragraphs (1.10.1) through (1.10.3) requirements below. Contractors shall report directly to their respective Contracting Officer. There are two general categories of accidents as defined below. Crane accidents are those that occur during operation of a crane. Rigging gear accidents are those that occur when gear is used by itself in weight handling operation i.e., without a crane.

1.13.1 Crane Accident: For the purpose of this definition, it is assumed there is an "operating envelope" around any crane, and inside the envelope are the following elements:

- The crane
- The operator
- The rigger(s) and crane walker
- Other personnel involved in the operation (supervisor, mechanic, tag line handler, engineer, etc.)
- The rigging gear between the hook and the load
- The load
- The crane's supporting structure (ground, rail, etc.)
- The lift procedure

1.13.1.1 Definition: A crane accident occurs when any one or more of the six elements in the operating envelope fails to perform correctly during operation, including operation during maintenance, or testing resulting in the following:

- Personnel injury or death. Minor injuries that are inherent in any industrial operation, including strains and repetitive motion related injuries, shall be reported by the normal personnel injury reporting process in lieu of these requirements.
- Material or equipment damage
- Dropped load
- Derailment
- Two-blocking
- Overload (This includes load tests when the test load tolerance is exceeded.)
- Collision, including unplanned contact between the load, crane, and/or other objects.

A component failure (e.g., motor burnout, gear tooth failure, bearing failure) is not considered an accident solely due to material or equipment damage unless the component failure results in damage to other components (e.g., dropped boom, dropped load, roll over, etc.). *[Bullets]* 3, 4, 5, 6, and 7 are considered crane accidents even though no material damage or injury occurs.

Exception: If a crane is used as an anchor point for a portable hoist/rigging gear, rigging gear accident as defined in paragraph 1.10.2 below is not considered a crane accident if the crane is not being operated (no functions are in motion) at the time of the rigging gear accident, unless the accident results in an overload or damage to the crane, in which case it shall be reported as a crane accident.

1.13.2 Rigging Gear Accidents: For the purpose of this definition, it is assumed there is an “operating envelope” around any weight handling operation, and inside the envelope are the following:

- Rigging gear and miscellaneous equipment
- The user of the gear or equipment
- Other personnel involved in the operation (supervisor, mechanic, tag line handler, engineer, etc.)
- The load
- The gear or equipment’s supporting structure
- The load’s rigging path

- The rigging procedure

1.13.2.1 Definition. A rigging gear accident occurs when any one or more of the five elements in the operating envelope fails to perform correctly during weight handling operations resulting in the following:

- Personnel injury or death. Minor injuries that are inherent in any industrial operation, including strains and repetitive motion related injuries, shall be reported by the normal personnel injury reporting process of the activity in lieu of these requirements.
- Material or equipment damage that requires the damaged item to be repaired because it can no longer perform its intended function. This does not include superficial damage such as scratched paint, damaged lagging, or normal wear on rigging gear.
- Dropped load.
- Two-blocking of cranes and powered hoists.
- Overload. (This includes load tests when the test load tolerance is exceeded.)

A component failure (e.g., motor burnout, gear tooth failure, bearing failure) is not considered an accident solely due to material or equipment damage unless the component failure results in damage to other components (e.g., dropped load, damaged load, etc.). *[Bullets]* 3, 4, and 5 are considered accidents even though no material damage or injury occurs.

1.13.3 The contractor shall notify the Contracting Officer as soon as practical, but not later than four hours, after any WHE accident. The contractor shall secure the accident site and protect evidence until released by the Contracting Officer. The contractor shall conduct an accident investigation to establish the root cause(s) of the accident. Crane operations shall not proceed until cause is determined and corrective actions have been implemented to the satisfaction of the Contracting Officer. The contractor shall provide the Contracting Officer within 30 days of any accident a Crane and Rigging Gear Accident Report using the form provided in reference1.2.1 consisting of a summary of circumstances, an explanation of causes(s), photographs if available, and corrective actions taken. These notifications and reporting requirements are in addition to those promulgated by reference 1.2.6 and related claimant instructions.

1.14 Each contractor shall perform the following actions prior to conducting crane operations on Navy property:

1.14.1 <u>Inspection Requirements</u>: It shall be the sole responsibility of the contractor to assure the Contracting Officer and/or designated Navy personnel that the crane and associated rigging gear are in good working order and safe for use.

1.14.1.1 <u>Crane Inspection</u>: Perform pre-operational inspection of the crane in the presence of a representative of the Contracting Office of the crane prior to starting work on Navy property. Inspection shall meet all applicable reference 1.2.2, reference 1.2.7 (for NAVFAC construction contracts), and OSHA requirements.

1.14.1.2 <u>Wire Rope Inspection</u>: Perform a Wire Rope Inspection in the presence of a representative of the contracting office to applicable reference 1.2.2, reference 1.2.7 (for NAVFAC construction contracts), and OSHA requirements.

1.14.1.3 <u>Rigging Gear Inspection</u>: Perform a Rigging Gear Inspection in the presence of a representative of the contracting office to applicable reference 1.2.2, reference 1.2.7 (for NAVFAC construction contracts), and OSHA requirements.

APPENDIX P – CONTRACTOR CRANE (OR ALTERNATE MACHINE USED TO LIFT SUSPENDED LOAD) AND RIGGING GEAR REQUIREMENTS

CERTIFICATE OF COMPLIANCE	
This certificate shall be signed by an official of the company that provides cranes (or multi-purpose machines, material handling equipment, or construction equipment used to lift loads suspended by rigging gear) or rigging gear for any application under this contract. Post a completed certificate on each crane or alternate machine (or in the contractor's on-site office for rigging operations) brought onto Navy property.	
CONTRACTING OFFICER'S POINT OF CONTACT (**Government Representative)**	PHONE
PRIME CONTRACTOR/PHONE	CONTRACT NUMBER
CRANE OR ALTERNATE MACHINE SUPPLIER/PHONE (if different from prime contractor)	CRANE OR ALTERNATE MACHINE NUMBER (i.e., ID number)
CRANE OR ALTERNATE MACHINE MANUFACTURER/TYPE/CAPACITY	
CRANE OR ALTERNATE MACHINE OPERATOR'S NAME(S)	
I certify that 1. The above noted crane or alternate machine and all rigging gear conform to applicable OSHA regulations (host country regulations for naval activities in foreign countries) and applicable ASME B30 standards. The following OSHA regulations and ASME standards apply:_____ 2. The operators noted above have been trained and are qualified for the operation of the above noted crane(s) or alternate machine(s). 3. The operators noted above have been trained not to bypass safety devices during lifting operations. 4. The operators, riggers and company officials are aware of the actions required in the event of an accident as specified in the contract.	
COMPANY OFFICIAL SIGNATURE	DATE
COMPANY OFFICIAL NAME/TITLE	
POST ON CRANE (OR ALTERNATE MACHINE) (IN CAB OR VEHICLE) (or in the contractor's on-site office for rigging operations)	

FIGURE P-1

SECTION 01 35 26 – ATTACHMENT A

CONTRACTOR CRANE ENTRY CHECKLIST

1	Crane Company:	**Date of Entry:**		
	Crane Manufacturer/Crane Model/Crane Number:	**Time of Entry:**		
2	Date of Annual Inspection Expiration			
3	Date of Quadrennial Inspection Expiration			
4	Name & phone number of Contracting Official (or designated local representative)	**Contracting Official** **Phone Number**		
5	Does the package include a routine or critical lift plan?		**Yes** ☐	**No** ☐
6	Location of lift site?			
7	Duration crane will be continuously on the job site (hrs, days, weeks…)			
8	Does plan include certification from contractor that the crane complies with ASME B30 standard [B30.5 (mobile cranes), B30.8 (floating cranes), B30.22 (articulating boom cranes), or B30.3 (construction tower cranes)] as applicable?		**Yes** ☐	**No** ☐
9	Does plan include a certificate of compliance?		**Yes** ☐	**No** ☐
10	Which OSHA regulations does the certificate of compliance indicate? (For cranes used in cargo transfer, 29 CFR 1917 applies; for cranes used in construction, demolition, or maintenance, 29 CFR 1926 applies; for cranes used in shipbuilding, ship repair, or ship breaking, 29 CFR 1915 applies).			
11	Does plan include valid medical certificate and proof of operator qualification from a source that qualifies crane operators (union, governmental agency, or an organization that tests and qualifies crane operators)? Verify qualification for each back-up operator (if provided) on the certificate of compliance.	**Yes** ☐	**No** ☐	**N/A** ☐
12	Does the plan designate a qualified Rigger-in-Charge		**Yes** ☐	**No** ☐
13	What is the weight of the heaviest load to be lifted?		**lbs.**	
14	What is the weight of the rigging gear?		**lbs.**	
15	What are the crane components (and their weights) that add to the weight of the load (hook, jib, etc.)?	**Main Block**	**lbs.**	
		Aux. Block	**lbs.**	
		Jib (Stowed)	**lbs.**	
		Jib (Erected)	**lbs.**	
		Other	**lbs.**	
16	What is the maximum total crane lift (sum of 13, 14 & 15 above)?	**TOTAL**	**lbs.**	
17	What is the capacity of the crane as configured		**lbs.**	
18	What percentage of crane capacity does this lift represent?		**%**	

FIGURE P-2

19	What is the main boom length? If a jib will be utilized, indicate the length and offset.		**MAIN**	**JIB**	**OFFSET**	
20	What are the minimum and maximum load radii?	**Min**		**Max**		
21	Does the plan include the manufacturer's load chart for entire range of lift(s)?				**Yes** ☐	**No** ☐
22	Does plan include ground loading and outrigger reaction data to determine cribbing requirements, or a Waterfront Operational Permit?			**Yes** ☐	**No** ☐	**N/A** ☐
23	For crawler crane, does the plan indicate area restrictions for operation?			**Yes** ☐	**No** ☐	**N/A** ☐
24	For floating crane, does plan include maximum allowable list?			**Yes** ☐	**No** ☐	**N/A** ☐
25	For mobile crane mounted on barge, is crane equipped with load indicating device? Wind indicating device? Marine type list and trim indicator (readable in one-half degree increments)?			**Yes** ☐	**No** ☐	**N/A** ☐
26	For mobile crane mounted on barge, does plan include revised load chart?			**Yes** ☐	**No** ☐	**N/A** ☐
27	What are the environmental conditions under which crane operations are to be stopped?					
28	Will the crane perform critical lifts? **(If no, skip items 29 –49.)**				**Yes** ☐	**No** ☐
29	What circumstances require this lift to be classified as a critical lift? (Blind lift, 75% of chart, non-routine rigging, etc.)					
30	What are the exact dimensions of the load? (L x W x H)					
31	Does the plan indicate the crane position? (Overhead view)				**Yes** ☐	**No** ☐
32	What is the maximum lift height of the lift?					
33	What is the minimum boom angle?					
34	What is the maximum boom angle?					
35	What is the name of the operator?					
36	Indicate name(s) of backup operator (if required).					
37	Does the plan show lift points?				**Yes** ☐	**No** ☐
38	Does the plan describe the rigging procedures?				**Yes** ☐	**No** ☐
39	Does the plan indicate rigging hardware requirements?				**Yes** ☐	**No** ☐

FIGURE P-2

40	For personnel lifts, does the plan demonstrate compliance with 29 CFR 1926.550?	**Yes** ☐	**No** ☐	**N/A** ☐
41	Does EM 385-1-1 govern this lift?	**Yes** ☐	**No** ☐	**N/A** ☐
42	What are the coordination and communication requirements for the lift (e.g., radio and hand signals)?			
43	For tandem or tailing crane lifts, does the plan indicate the make and model of the crane, the line, boom, and swing speeds, and the requirement for an equalizer beam?	**Yes** ☐	**No** ☐	**N/A** ☐
44	For floating cranes, refer to questions 20-22?			
45	What is the name of the lift supervisor?			
56	Does the plan indicate the qualifications of the lift supervisor?		**Yes** ☐	**No** ☐
47	What are the names of the riggers?			
48	Does the plan indicate the qualifications of the riggers?		**Yes** ☐	**No** ☐
49	Did all involved personnel (Operator, Riggers, Lift Supervisor, etc.) sign the critical lift plan?		**Yes** ☐	**No** ☐

Name	Organization	**Signature**	**Date**	**Phone**
Contracting Official:				
wed By				

FIGURE P-2

CRANE AND RIGGING GEAR ACCIDENT REPORT

Accident Category: ☐ Crane Accident ☐ Rigging Gear Accident

From: UIC:	To: Navy Crane Center Bldg 491 NNSY Portsmouth, VA 23709 Fax (757) 967-3808
Activity:	Report No:
Crane No: / Category:	Accident Date: / Time: hrs
Category of Service: ☐ SPS ☐ GPS	Crane Type: / Crane Manufacturer:
Was Crane/Rigging Gear Being Used in SPS? Yes No	Was Crane/Rigging Gear Being Used in a Complex Lift/Critical non-crane rigging operation? Yes No
Location:	Weather:
Crane Capacity: / Hook Capacity:	Weight of Load on Hook:
Fatality or Permanent Disability? ☐ Yes ☐ No	Material/Property Cost Estimate:
Reported to NAVSAFECEN? ☐ Yes ☐ No	

Accident Type:
☐ Personal Injury ☐ Overload ☐ Derail ☐ Damaged Rigging Gear
☐ Load Collision ☐ Two Blocked ☐ Dropped Load ☐ Damaged Crane
☐ Crane Collision ☐ Damaged Load ☐ Other Specify _____

Cause of Accident:
☐ Improper Operation ☐ Equipment Failure ☐ Inadequate Visibility
☐ Improper Rigging ☐ Switch Alignment ☐ Inadequate Communication
☐ Track Condition ☐ Procedural Failure ☐ Other Specify _____

Chargeable to:
☐ Crane Walker ☐ Rigger ☐ Operator
☐ Maintenance ☐ Management/Supervision ☐ Other Specify _____

Crane Function:
☐ Travel ☐ Hoist ☐ Rotate ☐ Luffing ☐ Telescoping ☐ Other ☐ N/A

Is this accident indicative of a recurring problem? ☐ Yes ☐ No

If yes, list Accident Report Nos.: _____

ATTACH COMPLETE AND CONCISE SITUATION DESCRIPTION AND CORRECTIVE/PREVENTIVE ACTIONS TAKEN AS ENCLOSURE (1). Include probable cause and contributing factors. Assess damages and define responsibility. For equipment malfunction or failure, include specific description of the component and the resulting effect or problem caused by the malfunction or failure. List immediate and long term corrective/preventive actions assigned and respective codes.

Preparer:	Phone and email	Code	Date

Concurrences:

	Code	Date
Certifying Official (Crane Accidents Only):		

FIGURE 12-1 (1 of 2)

CRANE AND RIGGING GEAR ACCIDENT REPORT INSTRUCTIONS

This form is designed for fax transmission without a cover page or by e-mail and, with enclosures and signatures, shall be the official document. Electronic submission will be accepted without signatures but the names of the preparer, concurring personnel, and certifying official (for crane accidents only) shall be filled in. The e-mail address is m_nfsh_ncc_accident@navy.mil. The fax number is (757) 967-3808.

1. Accident Category: Indicate either crane accident or rigging gear accident.
2. From: The naval activity that is responsible for reporting the accident and UIC number.
3. Activity: The naval activity where the accident took place.
4. Report No.: The activity assigned accident number (e.g., 95-001).
5. Crane No.: The activity assigned crane number (e.g., PC-5), if applicable.
6. Category: Identify category of crane (i.e., 1, 2, 3, or 4), if applicable.
7. Accident Date: The date the accident occurred.
8. Time: The time (24 hour clock) the accident occurred (e.g., 1300).
9. Category of Service: Check the applicable service (SPS as defined by NAVSEA 0989-030-7000).
10. Crane Type: The type of crane involved in the accident (e.g., mobile, bridge), if applicable.
11. Crane Manufacturer: The manufacturer of the crane (e.g., Dravo, Grove, P&H), if applicable.
12. SPS: Was the crane or rigging gear being used in an SPS lift?
13. Complex lift: Was the crane or rigging gear being used in a complex lift?
14. Location: The detailed location where the accident took place (e.g., building 213, dry dock 5).
15. Weather: The weather conditions at time of accident (e.g., wind, rain, cold).
16. Crane Capacity: The certified capacity of the crane (e.g., 120,000 pounds), if applicable.
17. Hook Capacity: The capacity of the hook involved in the accident at the max radius of the operation, if applicable.
18. Weight of Load on Hook: If applicable, the weight of the load on the hook.
19. Fatality or Permanent Disability?: Check yes or no.
20. Material/Property Cost Estimate: Estimate total cost of damage resulting from the accident.
21. Reported to NAVSAFECEN?: Self-explanatory.
22. Accident Type: Check all that apply.
23. Cause of Accident: Check all that apply.
24. Chargeable to: Check all that apply.
25. Crane Function: Check all functions in operation at time of accident. Check N/A if a rigging gear accident.
26. Is this a recurring problem?: Check yes or no. Identify any other similar accidents.
27. Situation Description/Corrective Actions: Self-explanatory.
28. Preparer: Self-explanatory.
29. Concurrences: Self-explanatory.
30. Certifying Official (Crane Accidents Only): Self-explanatory.

FIGURE 12-1 (2 of 2)

CRANE AND RIGGING GEAR NEAR MISS REPORT

Near Miss Category: ☐ Crane Near Miss ☐ Rigging Gear Near Miss

From: UIC:	To: Navy Crane Center Bldg 491 NNSY Portsmouth, VA 23709 Fax (757) 967-3808 nfsh_ncc_accident@navy.mil

Activity:			Report No:
Crane/Equipment No:	Category:	Near Miss Date:	Time: hrs
Category of Service: ☐ SPS ☐ GPS		Crane /Equipment Type:	Crane/Equipment Manufacturer:
Location:		Weather:	
Crane/Equipment Capacity:	Hook Capacity:	Weight of Load on Hook:	

Is this near miss indicative of a recurring problem? ☐ Yes ☐ No

If yes, list report numbers: _____

In the space below, include a brief description of the event and corrective actions taken to prevent recurrence:

Preparer:	Phone and email	Code	Date

FIGURE 12-2 (1 of 2)

CRANE AND RIGGING GEAR NEAR MISS INSTRUCTIONS

This form is designed for fax transmission without a cover page or by e-mail and, with enclosures and signatures, shall be the official document. Electronic submission will be accepted without signatures but the names of the preparer, concurring personnel, and certifying official (for crane accidents only) shall be filled in. The e-mail address is nfsh_ncc_accident@navy.mil. The fax number is (757) 967-3808.

1. Near Miss Category: Indicate either crane or rigging gear near miss.
2. From: The naval activity that is responsible for reporting the near miss and UIC number.
3. Activity: The naval activity where the near miss took place.
4. Report No.: The activity assigned near miss number (e.g., 95-001).
5. Crane No.: The activity assigned crane number (e.g., PC-5), if applicable.
6. Category: Identify category of crane (i.e., 1, 2, 3, or 4), if applicable.
7. Near Miss Date: The date the near miss occurred.
8. Time: The time (24 hour clock) the near miss occurred (e.g., 1300).
9. Category of Service: Check the applicable service (SPS as defined by NAVSEA 0989-030-7000).
10. Crane Type: The type of crane involved in the near miss (e.g., mobile, bridge), if applicable.
11. Crane Manufacturer: The manufacturer of the crane (e.g., Dravo, Grove, P&H), if applicable.
12. Location: The detailed location where the near miss took place (e.g., building 213, dry dock 5).
13. Weather: The weather conditions at time of the near miss (e.g., wind, rain, cold).
14. Crane Capacity: The certified capacity of the crane (e.g., 120,000 pounds), if applicable.
15. Hook Capacity: The capacity of the hook involved in the near miss at the maximum radius of the operation, if applicable.
16. Weight of Load on Hook: If applicable, the weight of the load on the hook.
17. Is this a recurring problem?: Check yes or no. Identify any other similar near misses or accidents.
18. Situation Description/Corrective Actions: Self-explanatory.
19. Preparer: Self-explanatory.

FIGURE 12-2 (2 of 2)

SECTION 01 35 26 – ATTACHMENT B

PORTSMOUTH NAVAL SHIPYARD UTILITY LOCATING PROCEDURES

LOCATION OF UNDERGROUND FACILITIES

B1.1 General

Excavation or ground penetrating work is defined as any operation in which earth, rock or other material below ground is moved or otherwise displaced, by means of power and hand tools, power equipment which includes grading, trenching, digging, boring, auguring, tunneling, scraping and cable or pipe driving except tilling of soil, gardening or displacement of earth, rock or other material for agricultural purposes. Removal of bituminous concrete pavement or concrete is not considered excavation

Ground penetrating work may include but is not limited to installing fence posts, probes, borings, piles, sign posts, stakes or anchor rods of any kind that penetrates the soil more than 3”.

The “Excavator” is defined as the person directly responsible for performing the excavation or ground penetrating work.

B1.2 Underground Utilities

The Contractor/Excavator shall fully comply with the State of Maine “DIG SAFE “law (Title 23, MRSA 3360-A).

Existing underground utilities shown on the plans are based on PNS Yard Plates and are shown in their approximate locations only.

The Excavator shall pre-mark the excavation area in “White Paint Only”. (Field notes may be done in Pink paint).

The Excavator shall notify “DIG SAFE” (1-888-344-7233) at least within 14calendar days, but no more than 30 calendar days prior to the commencement of the excavation or ground penetrating activity.

The Excavator shall prepare a PWD ME Dig Safe Utility Locate Request Format least within 14 calendar days prior to the commencement of the excavation or ground penetrating activity and submit the Form to the Contracting Officer. (The PDW ME Dig Safe Form is attached at the end of this Section.)

The Government will locate and mark the underground utilities within 14 calendar days of receiving the Dig Safe Notification.

Excavation or ground penetrating activities cannot commence until the utilities have been marked in the field and the PWD ME Dig Safe Utility Locate Form has been returned indicating the PWD ME Dig Safe review process has been completed and excavation has been approved by the Contracting Officer.

If the excavation or ground penetrating activities do not commence within27 days of Dig Safe notification or the excavation work is expanded outside the location originally specified in the notification, the Excavator shall re-notify Dig Safe, the Contracting Officer and the PWD ME Dig Safe Coordinator.

PORTSMOUTH NAVAL SHIPYARD UTILITY LOCATING PROCEDURES

The Contractor shall maintain the utility markings though out the contract period. If additional markings are required, the Excavator shall re-notify Dig Safe, the Contracting Officer and the PWD ME Dig Safe Coordinator. Re-markings will be completed at the Contractor’s expense.

The Contractor shall contact the PWD ME Dig Safe Coordinator at 207-438-1082 if there are any questions regarding the underground utilities or the Dig Safe notification

SECTION 01 42 00

SOURCES FOR REFERENCE PUBLICATIONS
11/14

PART 1 GENERAL

1.1 REFERENCES

Various publications are referenced in other sections of the specifications to establish requirements for the work. These references are identified in each section by document number, date and title. The document number used in the citation is the number assigned by the standards producing organization (e.g. ASTM B564 Standard Specification for Nickel Alloy Forgings). However, when the standards producing organization has not assigned a number to a document, an identifying number has been assigned for reference purposes.

1.2 ORDERING INFORMATION

The addresses of the standards publishing organizations whose documents are referenced in other sections of these specifications are listed below, and if the source of the publications is different from the address of the sponsoring organization, that information is also provided. Documents listed in the specifications with numbers which were not assigned by the standards producing organization should be ordered from the source by title rather than by number.

ACOUSTICAL SOCIETY OF AMERICA (ASA)
1305 Walt Whitman Road, Suite 300
Melville, NY 11747-4300
Ph: 516-576-2360
Fax: 631-923-2875
E-mail: asa@aip.org
Internet: http://asa.aip.org

AIR MOVEMENT AND CONTROL ASSOCIATION INTERNATIONAL (AMCA)
30 West University Drive
Arlington Heights, IL 60004-1893
Ph: 847-394-0150
Fax: 847-253-0088
E-mail: amca@amca.org
Internet: http://www.amca.org

AIR-CONDITIONING, HEATING AND REFRIGERATION INSTITUTE (AHRI)
2111 Wilson Blvd, Suite 500
Arlington, VA 22201
Ph: 703-524-8800
Fax: 703-562-1942
Internet: http://www.ahrinet.org

ALUMINUM ASSOCIATION (AA)
National Headquarters
1525 Wilson Boulevard, Suite 600
Arlington, VA 22209
Ph: 703-358-2960
E-Mail: info@aluminum.org

Internet: http://www.aluminum.org

AMERICAN ASSOCIATION OF STATE HIGHWAY AND TRANSPORTATION OFFICIALS (AASHTO)
444 North Capital Street, NW, Suite 249
Washington, DC 20001
Ph: 202-624-5800
Fax: 202-624-5806
E-Mail: info@aashto.org
Internet: http://www.aashto.org

AMERICAN BEARING MANUFACTURERS ASSOCIATION (ABMA)
2025 M Street, NW, Suite 800
Washington, DC 20036
Ph: 202-367-1155
E-mail: info@americanbearings.org
Internet: http://www.americanbearings.org

AMERICAN CONCRETE INSTITUTE INTERNATIONAL (ACI)
38800 Country Club Drive
Farmington Hills, MI 48331-3439
Ph: 248-848-3700
Fax: 248-848-3701
E-mail: bkstore@concrete.org
Internet: http://www.concrete.org

AMERICAN CONFERENCE OF GOVERNMENTAL INDUSTRIAL HYGIENISTS (ACGIH)
1330 Kemper Meadow Drive
Cincinnati, OH 45240
Ph: 513-742-2020 or 513-742-6163
Fax: 513-742-3355
E-mail: mail@acgih.org
Internet: http://www.acgih.org

AMERICAN HARDBOARD ASSOCIATION (AHA)
1210 West Northwest Highway
Palatine, IL 60067
Ph: 847-934-8800
Fax: 847-934-8803
E-mail: aha@hardboard.org
Internet: http://domensino.com/AHA/

AMERICAN INDUSTRIAL HYGIENE ASSOCIATION (AIHA)
3141 Fairview Park Dr, Suite 777
Falls Church, VA 22042
Tel: 703-849-8888
Fax: 703-207-3561
E-mail: infonet@aiha.org
Internet http://www.aiha.org

AMERICAN INSTITUTE OF STEEL CONSTRUCTION (AISC)
One East Wacker Drive, Suite 700
Chicago, IL 60601-1802
Ph: 312-670-2400
Fax: 312-670-5403
Bookstore: 800-644-2400
E-mail: aisc@ware-pak.com
Internet: http://www.aisc.org

AMERICAN NATIONAL STANDARDS INSTITUTE (ANSI)
1899 L Street, NW,11th Floor
Washington, DC 20036
Ph: 202-293-8020
Fax: 202-293-9287
E-mail: storemanager@ansi.org
Internet: http://www.ansi.org/

AMERICAN SOCIETY OF HEATING, REFRIGERATING AND AIR-CONDITIONING ENGINEERS (ASHRAE)
1791 Tullie Circle, NE
Atlanta, GA 30329
Ph: 800-527-4723 or 404-636-8400
Fax: 404-321-5478
E-mail: ashrae@ashrae.org
Internet: http://www.ashrae.org

AMERICAN SOCIETY OF SAFETY ENGINEERS (ASSE/SAFE)
1800 East Oakton Street
Des Plaines, IL 60018
Ph: 847-699-2929
Internet: http://www.asse.org

AMERICAN SOCIETY OF SANITARY ENGINEERING (ASSE)
18927 Hickory Creek Drive, Suite 220
Mokena, IL 60448
Ph: 708-995-3019
Fax: 708-479-6139
E-mail: staffengineer@asse-plumbing.org
Internet: http://www.asse-plumbing.org

AMERICAN WATER WORKS ASSOCIATION (AWWA)
6666 West Quincy Avenue
Denver, CO 80235-3098
Ph: 303-794-7711
E-mail: distribution@awwa.org
Internet: http://www.awwa.org

AMERICAN WELDING SOCIETY (AWS)
13301 NW 47 Ave
Miami, FL 33054

Ph: 888-WELDING, 305-824-1177, 305-826-6192
Fax: 305-826-6195
E-mail: customer.service@awspubs.com
Internet: http://www.aws.org

ASME INTERNATIONAL (ASME)
Two Park Avenue, M/S 10E
New York, NY 10016-5990
Ph: 800-843-2763
Fax: 973-882-1717
E-mail: customercare@asme.org
Internet: http://www.asme.org

ASPHALT INSTITUTE (AI)
2696 Research Park Drive
Lexington, KY 40511-8480
Ph: 859-288-4960

Fax: 859-288-4999
E-mail: info@asphaltinstitute.org
Internet: http://www.asphaltinstitute.org

ASSOCIATED AIR BALANCE COUNCIL (AABC)
1518 K Street, NW
Washington, DC 20005
Ph: 202-737-0202
Fax: 202-638-4833
E-mail: info@aabc.com
Internet: http://www.aabc.com/

ASTM INTERNATIONAL (ASTM)
100 Barr Harbor Drive, P.O. Box C700
West Conshohocken, PA 19428-2959
Ph: 877-909-2786
Internet: http://www.astm.org

CONCRETE REINFORCING STEEL INSTITUTE (CRSI)
933 North Plum Grove Road
Schaumburg, IL 60173-4758
Ph: 847-517-1200
Fax: 847-517-1206
Internet: http://www.crsi.org/

CONSUMER ELECTRONICS ASSOCIATION (CEA)
1919 South Eads St.
Arlington, VA 22202
Ph: 866-858-1555 or 703-907-7634
Fax: 866-858-2555 or 703-907-7693
E-mail: standards@CE.org
Internet: http://www.CE.org

ETL TESTING LABORATORIES (ETL)
Intertek
Ph: 888-DIRLIST (888-347-5478)
Internet: http://www.intertek.com/

FLUID SEALING ASSOCIATION (FSA)
994 Old Eagle School Rd. #1019
Wayne, PA 19087-1866
Ph: 610-971-4850
Internet: www.fluidsealing.com

FM GLOBAL (FM)
270 Central Avenue
P.O. Box 7500
Johnston, RI 02919-4923
Ph: 877-364-6726
Fax: 401-275-3029
E-mail: servicedesk.myrisk@fmglobal.com
Internet: http://www.fmglobal.com

FOUNDATION FOR CROSS-CONNECTION CONTROL AND HYDRAULIC RESEARCH (FCCCHR)
University of South California
Research Annex 219
3716 South Hope Street
Los Angeles, CA 90089-7700

Ph: 213-740-2032 or 866-545-6340
Fax: 213-740-8399
E-mail: fccchr@usc.edu
Internet: http://www.usc.edu/dept/fccchr

GREEN SEAL (GS)
1001 Connecticut Avenue, NW
Suite 827
Washington, DC 20036-5525
Ph: 202-872-6400
Fax: 202-872-4324
Internet: http://www.greenseal.org

INSTITUTE OF ELECTRICAL AND ELECTRONICS ENGINEERS (IEEE)
445 and 501 Hoes Lane
Piscataway, NJ 08854-4141
Ph: 732-981-0060 or 800-701-4333
Fax: 732-562-9667
E-mail: onlinesupport@ieee.org
Internet: http://www.ieee.org

INTERNATIONAL CODE COUNCIL (ICC)
500 New Jersey Avenue, NW
6th Floor, Washington, DC 20001
Ph: 800-786-4452 or 888-422-7233
E-mail: order@iccsafe.org
Internet: www.iccsafe.org

INTERNATIONAL ELECTRICAL TESTING ASSOCIATION (NETA)
3050 Old Centre Ave. Suite 102
Portage, MI 49024
Ph: 269-488-6382
Internet: http://www.netaworld.org

INTERNATIONAL ORGANIZATION FOR STANDARDIZATION (ISO)
1, ch. de la Voie-Creuse
Case Postale 56
CP 56 - CH-1211 Geneva 20
Switzerland
Ph: 41-22-749-01-11
Fax: 41-22-733-34-30
E-mail: central@iso.ch
Internet: http://www.iso.org

INTERNET ENGINEERING TASK FORCE (IETF)
c/o Association Management Solutions, LLC (AMS)
48377 Fremont Blvd., Suite 117
Fremont, California 94538
Ph: 510-492-4080
Fax: 510-492-4001
E-mail: ietf-info@ietf.org
Internet: http://www.ietf.org/

LONMARK INTERNATIONAL (LonMark)
550 Meridan Ave.
San Jose, CA 95126
Ph: 408-938-5266
Fax: 408-790-3838
Internet: http://www.lonmark.org

MANUFACTURERS STANDARDIZATION SOCIETY OF THE VALVE AND FITTINGS INDUSTRY (MSS)
127 Park Street, NE
Vienna, VA 22180-4602
Ph: 703-281-6613
E-mail: info@mss-hq.com
Internet: http://mss-hq.org/Store/index.cfm

MASTER PAINTERS INSTITUTE (MPI)
2800 Ingleton Avenue
Burnaby, BC CANADA V5C 6G7
Ph: 1-888-674-8937
Fax: 1-888-211-8708
E-mail: info@paintinfo.com or techservices@mpi.net
Internet: http://www.mpi.net/

MIDWEST INSULATION CONTRACTORS ASSOCIATION (MICA)
16712 Elm Circle
Omaha, NE 68130
Ph: 800-747-6422
Fax: 402-330-9702
Internet: http://www.micainsulation.org

MODBUS ORGANIZATION, INC (MODBUS)
PO Box 628
Hopkinton, MA 01748
Ph: 508-435-7170
Fax: 508-435-7172
Internet: http://www.modbus.org

NATIONAL ELECTRICAL MANUFACTURERS ASSOCIATION (NEMA)
1300 North 17th Street, Suite 900
Arlington, VA 22209
Ph: 703-841-3200
Internet: http://www.nema.org/

NATIONAL ENVIRONMENTAL BALANCING BUREAU (NEBB)
8575 Grovemont Circle
Gaithersburg, MD 20877
Ph: 301-977-3698
Fax: 301-977-9589
Internet: http://www.nebb.org

NATIONAL FIRE PROTECTION ASSOCIATION (NFPA)
1 Batterymarch Park
Quincy, MA 02169-7471
Ph: 617-770-3000
Fax: 617-770-0700
Internet: http://www.nfpa.org

NATIONAL INSTITUTE OF STANDARDS AND TECHNOLOGY (NIST)
100 Bureau Drive
Stop 1070
Gaithersburg, MD 20899-1070
Ph: 301-975-NIST (6478)
E-mail: inquiries@nist.gov
Internet: http://www.nist.gov

OPC FOUNDATION (OPC)
16101 N. 82nd Street
Suite 3B
Scottsdale, AZ 85260-1868
Ph: 480-483-6644
Fax: 480-483-7202
Internet: http://www.opcfoundation.org

OCCUPATIONAL SAFETY AND HEALTH STANDARDS (OSHA)
Occupational Safety and Health Administration
200 Consitution Ave., NW,
Washington, DC 20210
Ph: 800-321-6742S

SCIENTIFIC CERTIFICATION SYSTEMS (SCS)
2000 Powell Street, Suite 600
Emeryville, CA 94608
Ph: 800-326-3228
E-mail: info@SCSglobal services.com
Internet: http://www.scsglobalservices.com/

SHEET METAL AND AIR CONDITIONING CONTRACTORS' NATIONAL ASSOCIATION (SMACNA)
4201 Lafayette Center Drive
Chantilly, VA 20151-1219
Ph: 703-803-2980
Fax: 703-803-3732
Internet: http://www.smacna.org

SOCIETY FOR PROTECTIVE COATINGS (SSPC)
40 24th Street, 6th Floor
Pittsburgh, PA 15222
Ph: 412-281-2331
Fax: 412-281-9992
E-mail: info@sspc.org
Internet: http://www.sspc.org

STATE OF MAINE (SHS)
Office of the Revisor of Statues
Room 108, State House
Augusta, Maine 04333-0007
Ph: 207-287-1650
Fax: 207-287-6468
E-mail: revisor.office@legislature.maine.gov

TELECOMMUNICATIONS INDUSTRY ASSOCIATION (TIA)
1320 N. Courthouse Rd., Suite 200
Arlington, VA 22201
Ph: 703-907-7700
Fax: 703-907-7727
Internet: http://www.tiaonline.org

TRIDIUM, INC (TRIDIUM)
3951 Westerre Parkway, Suite 350
Richmond, VA 23233
Ph: 804-747-4771
Fax: 804-747-5204
Internet: http://www.tridium.com

U.S. ARMY CORPS OF ENGINEERS (USACE)
CRD-C DOCUMENTS available on Internet:
http://www.wbdg.org/ccb/browse_cat.php?c=68
Order Other Documents from:
USACE Publications Depot
Attn: CEHEC-IM-PD
2803 52nd Avenue
Hyattsville, MD 20781-1102
Ph: 301-394-0081
Fax: 301-394-0084
E-mail: pubs-army@usace.army.mil
Internet: http://www.publications.usace.army.mil/
or
http://www.hnc.usace.army.mil/Missions/Engineering/TECHINFO.aspx

U.S. DEFENSE LOGISTICS AGENCY (DLA)

Fort Belvoir, VA

Internet: http://www.dla.mil

U.S. DEPARTMENT OF DEFENSE (DOD)
Order DOD Documents from:
Room 3A750-The Pentagon
1400 Defense Pentagon
Washington, DC 20301-1400
Ph: 703-571-3343
FAX: 215-697-1462
E-mail: customerservice@ntis.gov
Internet: http://www.ntis.gov
Obtain Military Specifications, Standards and Related Publications from:
Acquisition Streamlining and Standardization Information System (ASSIST)
Department of Defense Single Stock Point (DODSSP)
Document Automation and Production Service (DAPS)
Building 4/D
700 Robbins Avenue
Philadelphia, PA 19111-5094
Ph: 215-697-6396 - for account/password issues
Internet: http://assist.daps.dla.mil/online/start/; account registration required
Obtain Unified Facilities Criteria (UFC) from:
Whole Building Design Guide (WBDG)
National Institute of Building Sciences (NIBS)
1090 Vermont Avenue NW, Suite 700
Washington, CD 20005
Ph: 202-289-7800
Fax: 202-289-1092
Internet: http://www.wbdg.org/references/docs_refs.php

U.S. DEPARTMENT OF ENERGY (DOE)
1000 Independence Avenue Southwest
Washington, D.C. 20585
Internet: www.eere.energy.gov

U.S. DEPARTMENT OF HOUSING AND URBAN DEVELOPMENT (HUD)
HUD User
P.O. Box 23268

Washington, DC 20026-3268
Ph: 800-245-2691 or 202-708-3178
TDD: 800-927-7589
Fax: 202-708-9981
Internet: http://www.huduser.org

U.S. ENVIRONMENTAL PROTECTION AGENCY (EPA)
Ariel Rios Building
1200 Pennsylvania Avenue, N.W.
Washington, DC 20004
Ph: 202-272-0167
Internet: http://www2.epa.gov/libraries
--- Some EPA documents are available only from:
National Technical Information Service (NTIS)
5301 Shawnee Road
Alexandria, VA 22312
Ph: 703-605-6050 or 1-688-584-8332
Fax: 703-605-6900
E-mail: info@ntis.gov
Internet: http://www.ntis.gov

U.S. FEDERAL AVIATION ADMINISTRATION (FAA)
Order for sale documents from:
Superintendent of Documents
U.S. Government Printing Office (GPO)
710 North Capitol Street, NW
Washington, DC 20401
Ph: 202-512-1800
Fax: 202-512-2104
E-mail: contactcenter@gpo.gov
Internet: http://www.gpoaccess.gov
Order free documents from:
Federal Aviation Administration
Department of Transportation
800 Independence Avenue, SW
Washington, DC 20591
Ph: 1-866-835-5322
Internet: http://www.faa.gov

U.S. FEDERAL COMMUNICATIONS COMMISSION (FCC)
445 12th Street SW
Washington, DC 20554
Ph: 888-225-5322
TTY: 888-835-5322
Fax: 866-418-0232
Internet: http://www.fcc.gov
Order Publications From:
Superintendent of Documents
U.S. Government Printing Office (GPO)
710 North Capitol Street, NW
Washington, DC 20401-0001
Ph: 202-512-1800
Fax: 866-418-0232
E-mail: gpoweb@gpo.gov
Internet: http://www.gpoaccess.gov/

U.S. FEDERAL HIGHWAY ADMINISTRATION (FHWA)
FHWA, Office of Safety
1200 New Jersey Ave., SE

Washington, DC 20590
Ph: 202-366-4000
Internet: http://www.fhwa.dot.gov
Order from:
Superintendent of Documents
U. S. Government Printing Office (GPO)
710 North Capitol Street, NW
Washington, DC 20401
Ph: 202-512-1800
Fax: 202-512-2104
E-mail: contactcenter@gpo.gov
Internet: http://www.gpoaccess.gov

U.S. GENERAL SERVICES ADMINISTRATION (GSA)
General Services Administration
1275 First St. NE
Washington, DC 20417
Ph: 202-501-1231
Internet: http://www.gsaelibrary.gsa.gov/ElibMain/home.do
Obtain documents from:
Acquisition Streamlining and Standardization Information System (ASSIST)
Internet: https://assist.dla.mil/online/start/; account registration required

U. S. GREEN BUILDING COUNCIL (USGBC)
2101 L St NW, Suite 500
Washington, D.C. 20037
Ph: 800-795-1747
Internet: http://www.usgbc.org

U.S. NATIONAL ARCHIVES AND RECORDS ADMINISTRATION (NARA)
8601 Adelphi Road
College Park, MD 20740-6001
Ph: 866-272-6272
Fax: 301-837-0483
Internet: http://www.archives.gov
Order documents from:
Superintendent of Documents
U.S.Government Printing Office (GPO)
710 North Capitol Street, NW
Washington, DC 20401
Ph: 202-512-1800
Fax: 202-512-2104
E-mail: contactcenter@gpo.gov
Internet: http://www.gpoaccess.gov

U.S. NAVAL FACILITIES ENGINEERING COMMAND (NAVFAC)
1322 Patterson Ave. SE, Suite 1000
Washington Navy Yard, DC 20374-5065
Ph: 202-685-9387
Internet: http://www.navfac.navy.mil

UNDERWRITERS LABORATORIES (UL)
2600 N.W. Lake Road
Camas, WA 98607-8542
Ph: 877-854-3577
E-mail: CEC.us@us.ul.com
Internet: http://www.ul.com/

UL Directories available through IHS at http://www.ihs.com

PART 2 PRODUCTS

Not used

PART 3 EXECUTION

Not used

-- End of Section --

SECTION 01 45 00.00 20

QUALITY CONTROL (PWD ME)
12/14

PART 1 GENERAL

This specification applies to only Design-Bid-Build projects.

1.1 REFERENCES

The publications listed below form a part of this specification to the extent referenced. The publications are referred to in the text by the basic designation only.

AMERICAN SOCIETY OF HEATING, REFRIGERATING AND AIR-CONDITIONING ENGINEERS (ASHRAE)

ASHRAE 52.2	(2012; Errata 2013) Method of Testing General Ventilation Air-Cleaning Devices for Removal Efficiency by Particle Size

ASTM INTERNATIONAL (ASTM)

ASTM D6245	(2012) Using Indoor Carbon Dioxide Concentrations to Evaluate Indoor Air Quality and Ventilation
ASTM D6345	(2010) Selection of Methods for Active, Integrative Sampling of Volatile Organic Compounds in Air

SHEET METAL AND AIR CONDITIONING CONTRACTORS' NATIONAL ASSOCIATION (SMACNA)

ANSI/SMACNA 008	(2007) IAQ Guidelines for Occupied Buildings Under Construction, 2nd Edition

U.S. ARMY CORPS OF ENGINEERS (USACE)

EM 385-1-1	(2008; Errata 1-2010; Changes 1-3 2010; Changes 4-6 2011; Change 7 2012) Safety and Health Requirements Manual

U.S. GREEN BUILDING COUNCIL (USGBC)

LEED GBDC	(2009) LEED Reference Guide for Green Building Design and Construction

1.2 SUBMITTALS

Government approval is required for submittals with a "G" designation; submittals not having a "G" designation are for Contractor Quality Control approval. Submit the following in accordance with Section 01 33 00 SUBMITTAL PROCEDURES for Design-Bid-Build projects:

SD-01 Preconstruction Submittals

Construction Quality Control (QC) Plan; G

Submit a Construction QC Plan prior to start of construction.

Indoor Air Quality (IAQ) Management Plan; G

Basis of Design

QC Manager Qualifications; G

Commissioning Authority Qualifications; G

SD-05 Design Data

Design Review

SD-07 Certificates

CA Resume

1.3 INFORMATION FOR THE CONTRACTING OFFICER

Prior to commencing work on construction, the Contractor can obtain a single copy set of the current report forms from the Contracting Officer. The report forms will consist of the Contractor Production Report, Contractor Production Report (Continuation Sheet), Contractor Quality Control (CQC) Report, (CQC) Report (Continuation Sheet), Preparatory Phase Checklist, Initial Phase Checklist, Rework Items List, and Testing Plan and Log.

Deliver the following to the Contracting Officer during Construction:

a. CQC Report: Mail or hand-carry the original (wet signatures) and one copy by 10:00 AM the next working day after each day that work is performed and for every seven consecutive calendar days of no-work.

b. Contractor Production Report: Submit the report electronically by 10:00 AM the next working day after each day that work is performed and for every seven consecutive calendar days of no-work.

c. Preparatory Phase Checklist: Submit the report electronically in the same manner as the CQC Report for each Preparatory Phase held.

d. Initial Phase Checklist: Submit the report electronically in the same manner as the CQC Report for each Initial Phase held.

f. Field Test Reports: Mail or hand-carry the original within two working days after the test is performed, attached to the original CQC Report and one copy attached to each QC Report copy.

g. Monthly Summary Report of Tests: Submit the report as an electronic attachment to the CQC Report at the end of each month.

h. Testing Plan and Log: Submit the report as an electronic attachment to the CQC Report, at the end of each month. A copy of the final Testing Plan and Log shall be provided to the OMSI preparer for

inclusion into the eOMSI documentation.

i. Rework Items List: Submit lists containing new entries daily, in the same manner as the CQC Report.

j. CQC Meeting Minutes: Within two working days after the meeting is held, submit the report as an electronic attachment to the CQC Report.

k. QC Certifications: As required by the paragraph entitled "QC Certifications."

1.4 QC PROGRAM REQUIREMENTS

Establish and maintain a QC program as described in this section. This QC program is a key element in meeting the objectives of NAVFAC Commissioning. The QC program consists of a QC Organization, QC Plan, QC Plan Meeting(s), a Coordination and Mutual Understanding Meeting, QC meetings, three phases of control, submittal review and approval, testing, completion inspections, and QC certifications and documentation necessary to provide materials, equipment, workmanship, fabrication, construction and operations which comply with the requirements of this Contract. The QC program must cover on-site and off-site work and be keyed to the work sequence. No construction work or testing may be performed unless the QC Manager is on the work site. The QC Manager must report to an officer of the firm and not be subordinate to the Project Superintendent or the Project Manager. The QC Manager, Project Superintendent and Project Manager must work together effectively. Although the QC Manager is the primary individual responsible for quality control, all individuals will be held responsible for the quality of work on the job.

1.4.1 Commissioning

Refer to Section 01 91 13 GENERAL COMMISSIONING REQUIREMENTS (PWD ME) for project commissioning requirements.

Commissioning (Cx) is a systematic process of ensuring that all building systems meet the requirements and perform interactively according to the Contract. The QC Program is a key to this process by coordinating, verifying and documenting measures to achieve the following objectives:

a. Verify and document that the applicable equipment and systems are installed in accordance with the design intent as expressed through the Contract and according to the manufacturer's recommendations and industry accepted minimum standards.

b. Verify and document that equipment and systems receive complete operational checkout by the installing Contractors.

c. Verify and document proper performance of equipment and systems.

d. Verify that Electronic Operation and Maintenance Support Information (eOMSI) documentation is complete.

e. Verify the Training Plan and training materials are accurate and provide correct instruction and documentation on the critical elements of the products, materials, and systems in the constructed facility. Verify that all identified Government operating personnel are trained.

1.4.2 Acceptance of the Construction Quality Control (QC) Plan

Acceptance of the QC Plan is required prior to the start of construction. The Contracting Officer reserves the right to require changes in the QC Plan and operations as necessary, including removal of personnel, to ensure the specified quality of work. The Contracting Officer reserves the right to interview any member of the QC organization at any time in order to verify the submitted qualifications. All QC organization personnel are subject to acceptance by the Contracting Officer. The Contracting Officer may require the removal of any individual for non-compliance with quality requirements specified in the Contract.

1.4.3 Preliminary Construction Work Authorized Prior to Acceptance

The only construction work that is authorized to proceed prior to the acceptance of the QC Plan is mobilization of storage and office trailers, temporary utilities, and surveying.

1.4.4 Notification of Changes

Notify the Contracting Officer, in writing, of any proposed changes in the QC Plan or changes to the QC organization personnel, a minimum of 10 work days prior to a proposed change. Proposed changes are subject to acceptance by the Contracting Officer.

1.5 QC ORGANIZATION

1.5.1 QC Manager

1.5.1.1 Duties

Provide a QC Manager at the work site to implement and manage the QC program. The QC Manager shall not perform the duties of Project Superintendent nor the duties of SSHOnor the duties of Project Manager. The QC Manager is required to attend the partnering meetings, QC Plan Meetings, Coordination and Mutual Understanding Meeting, conduct the QC meetings, perform the three phases of control, except for those phases of control designated to be performed by QC Specialists, perform submittal review and approval, ensure testing is performed and provide QC certifications and documentation required in this Contract. The QC Manager is responsible for managing and coordinating the three phases of control and documentation performed by the QC Specialists, testing laboratory personnel and any other inspection and testing personnel required by this Contract. The QC Manager is the manager of all QC activities and shall not be the Special Inspector.

1.5.1.2 Qualifications

An individual with a minimum of 10 years combined experience in the following positions: Project Superintendent, QC Manager, Project Manager, Project Engineer or Construction Manager on similar size and type construction contracts which included the major trades that are part of this Contract. The individual must have at least two years experience as a QC Manager. The individual must be familiar with the requirements of EM 385-1-1, and have experience in the areas of hazard identification, safety compliance, and sustainability.

1.5.2 Commissioning Authority

1.5.2.1 Duties

Provide a Commissioning Authority (CA) as key person for the Cx and documentation thereof, who is subordinate to the QC Manager. The CA directs and coordinates Cx activities and submits Cx reports to the Contracting Officer to meet the submittal and reporting requirements of the LEED EA Prerequisite Requirement for Fundamental Commissioning. The CA coordinates the actions of the QC Specialists, Testing Laboratory personnel, eOMSI Preparer, and other inspection and testing personnel required by this Contract for building Cx.

1.5.2.2 Qualifications

The CA must be certified as a commissioning professional by the Association of Energy Engineers (AEE), the Building Commissioning Association (BCA), the National Environmental Balancing Bureau (NEBB), or the University of Wisconsin - Madison (UWM). CA resume is required, providing education, experience and management capabilities on at least two similar size and type contracts. The CA may not have been involved with the project design, construction management, or supervision , and must be with a third-party firm that is not on the design team.

1.5.3 Construction Quality Management Training

In addition to the above experience and education requirements, the QC Manager must have completed the course entitled "Construction Quality Management (CQM) for Contractors." If the QC Manager does not have a current certification, they must obtain the CQM for Contractors course certification within 90 days of award. This course is periodically offered by the Naval Facilities Engineering Command and the Army Corps of Engineers. Contact the Contracting Officer for information on the next scheduled class.

1.5.4 Alternate QC Manager Duties and Qualifications

Designate an alternate for the QC Manager at the work site to serve in the event of the designated QC Manager's absence. The period of absence may not exceed two weeks at one time, and not more than 30 workdays during a calendar year. The qualification requirements for the Alternate QC Manager must be the same as for the QC Manager.

1.5.5 Submittal Reviewer Duties and Qualifications

Provide a Submittal Reviewer, other than the QC Manager or CA, qualified in the disciplines being reviewed, to review and certify that the submittals meet the requirements of this Contract prior to certification or approval by the QC Manager.

Each submittal must be reviewed by an individual with 10 years of construction experience.

1.6 QUALITY CONTROL (QC) PLAN

1.6.1 Construction Quality Control (QC) Plan

1.6.1.1 Requirements

Provide, for acceptance by the Contracting Officer, a Construction QC Plan submitted in a three-ring binder that includes a table of contents, with major sections identified with tabs, with pages numbered sequentially, and that documents the proposed methods and responsibilities for accomplishing commissioning activities during the construction of the project:

a. QC ORGANIZATION: A chart showing the QC organizational structure.

b. NAMES AND QUALIFICATIONS: Names and qualifications, in resume format, for each person in the QC organization. Include the CQM for Contractors course certifications for the QC Manager and Alternate QC Manager as required by the paragraphs entitled "Construction Quality Management Training" and "Alternate QC Manager Duties and Qualifications".

c. DUTIES, RESPONSIBILITY AND AUTHORITY OF QC PERSONNEL: Duties, responsibilities, and authorities of each person in the QC organization.

d. OUTSIDE ORGANIZATIONS: A listing of outside organizations, such as architectural and consulting engineering firms, that will be employed by the Contractor and a description of the services these firms will provide.

e. APPOINTMENT LETTERS: Letters signed by an officer of the firm appointing the QC Manager and Alternate QC Manager and stating that they are responsible for implementing and managing the QC program as described in this Contract. Include in this letter the responsibility of the QC Manager and Alternate QC Manager to implement and manage the three phases of control, and their authority to stop work which is not in compliance with the Contract. Letters of direction are to be issued by the QC Manager to all other QC Specialists outlining their duties, authorities, and responsibilities. Include copies of the letters in the QC Plan.

f. SUBMITTAL PROCEDURES AND INITIAL SUBMITTAL REGISTER: Procedures for reviewing, approving, and managing submittals. Provide the name(s) of the person(s) in the QC organization authorized to review and certify submittals prior to approval. Provide the initial submittal of the Submittal Register as specified in Section 01 33 00 SUBMITTAL PROCEDURES.

g. TESTING LABORATORY INFORMATION: Testing laboratory information required by the paragraphs entitled "Accreditation Requirements", as applicable.

h. TESTING PLAN AND LOG: A Testing Plan and Log that includes the tests required, referenced by the specification paragraph number requiring the test, the frequency, and the person responsible for each test. Use Government forms to log and track tests.

i. PROCEDURES TO COMPLETE REWORK ITEMS: Procedures to identify, record, track, and complete rework items. Use Government forms to record and

track rework items.

j. DOCUMENTATION PROCEDURES: Use Government form.

k. LIST OF DEFINABLE FEATURES: A Definable Feature of Work (DFOW) is a task that is separate and distinct from other tasks and has control requirements and work crews unique to that task. A DFOW is identified by different trades or disciplines and is an item or activity on the construction schedule. Include in the list of DFOWs, but not be limited to, all critical path activities on the NAS. Include all activities for which this specification requires QC Specialists or specialty inspection personnel. Provide separate DFOWs in the Network Analysis Schedule for each design development stage and submittal package.

l. PROCEDURES FOR PERFORMING THE THREE PHASES OF CONTROL: Identify procedures used to ensure the three phases of control to manage the quality on this project. For each DFOW, a Preparatory and Initial phase checklist will be filled out during the Preparatory and Initial phase meetings. Conduct the Preparatory and Initial Phases and meetings with a view towards obtaining quality construction by planning ahead and identifying potential problems for each DFOW.

m. PERSONNEL MATRIX: A personnel matrix showing for each section of the specification who will review and approve submittals, who will perform and document the three phases of control, and who will perform and document the testing.

n. PROCEDURES FOR COMPLETION INSPECTION: Procedures for identifying and documenting the completion inspection process. Include in these procedures the responsible party for punch out inspection, pre-final inspection, and final acceptance inspection.

o. TRAINING PROCEDURES AND TRAINING LOG: Procedures for coordinating and documenting the training of personnel required by the Contract.

p. ORGANIZATION AND PERSONNEL CERTIFICATIONS LOG: Procedures for coordinating, tracking and documenting all certifications on subcontractors, testing laboratories, suppliers, personnel, etc. QC Manager will ensure that certifications are current, appropriate for the work being performed, and will not lapse during any period of the contract that the work is being performed.

1.7 QC PLAN MEETINGS

Prior to submission of the QC Plan, the QC Manager will meet with the Contracting Officer to discuss the QC Plan requirements of this Contract. The purpose of this meeting is to develop a mutual understanding of the QC Plan requirements prior to plan development and submission and to agree on the Contractor's list of DFOWs.

1.8 COORDINATION AND MUTUAL UNDERSTANDING MEETING

After submission of the QC Plan, and prior to the start of construction, the QC Manager will meet with the Contracting Officer to present the QC program required by this Contract. When a new QC Manager is appointed, the coordination and mutual understanding meeting shall be repeated.

1.8.1 Purpose

The purpose of this meeting is to develop a mutual understanding of the QC details, including documentation, administration for on-site and off-site work, design intent, Cx, environmental requirements and procedures, coordination of activities to be performed, and the coordination of the Contractor's management, production, and QC personnel. At the meeting, the Contractor will be required to explain in detail how three phases of control will be implemented for each DFOW, as well as how each DFOW will be affected by each management plan or requirement as listed below:

a. Waste Management Plan.

b. IAQ Management Plan.

c. Procedures for noise and acoustics management.

d. Environmental Protection Plan.

e. Environmental regulatory requirements.

f. Cx Plan.

1.8.2 Coordination of Activities

Coordinate activities included in various sections to assure efficient and orderly installation of each component. Coordinate operations included under different sections that are dependent on each other for proper installation and operation. Schedule construction operations with consideration for indoor air quality as specified in the IAQ Management Plan. Coordinate prefunctional tests and startup testing with Cx.

1.8.3 Attendees

As a minimum, the Contractor's personnel required to attend include an officer of the firm, the Project Manager, Project Superintendent, QC Manager, Alternate QC Manager, QC Specialists, A/E, Commissioning Authority (CA), Environmental Manager, and subcontractor representatives or approved by the approved by the Contracting Officer. Each subcontractor who will be assigned QC responsibilities shall have a principal of the firm at the meeting. Minutes of the meeting will be prepared by the QC Manager and signed by the Contractor, the A/E and the Contracting Officer. Provide a copy of the signed minutes to all attendees and shall be included in the QC Plan.

1.9 QC MEETINGS

After the start of construction, conduct weekly QC meetings by the QC Manager at the work site with the Project Superintendent, QC Specialists, the CA, and the foremen who are performing the work of the DFOWs. The QC Manager is to prepare the minutes of the meeting and provide a copy to the Contracting Officer within two working days after the meeting. The Contracting Officer may attend these meetings. As a minimum, accomplish the following at each meeting:

a. Review the minutes of the previous meeting.

b. Review the schedule and the status of work and rework.

c. Review the status of submittals.

d. Review the work to be accomplished in the next two weeks and documentation required.

e. Resolve QC and production problems (RFI, etc.).

f. Address items that may require revising the QC Plan.

g. Review Accident Prevention Plan (APP).

h. Review environmental requirements and procedures.

i. Review Waste Management Plan.

j. Review IAQ Management Plan.

k. Review Environmental Management Plan.

l. Review the status of training completion.

m. Review Cx Plan and progress.

1.10 DESIGN REVIEW AND DOCUMENTATION

1.10.1 Basis of Design

Review the basis of design received from the Contracting Officer.

1.10.2 Design Review

Review design documents to verify that each commissioned system meets the design intent relative to functionality, energy performance, water performance, maintainability, sustainability, system cost, indoor environmental quality, and local environmental impacts. Fully document review in written report.

1.10.3 Contract Document Review

Review the Contract documents to verify that Cx is adequately specified, and that each commissioned system is likely to meet the design intent relative to functionality, energy performance, water performance, maintainability, sustainability, system cost, indoor environmental quality, and local environmental impacts.

1.11 THREE PHASES OF CONTROL

Adequately cover both on-site and off-site work with the Three Phases of Control and include the following for each DFOW.

1.11.1 Preparatory Phase

Notify the Contracting Officer at least two work days in advance of each preparatory phase meeting. The meeting will be conducted by the QC Manager and attended by the QC Specialists, the Project Superintendent, the CA, and the foreman responsible for the DFOW or as approved by the Contracting Officer. When the DFOW will be accomplished by a subcontractor, that subcontractor's foreman shall attend the preparatory phase meeting. Document the results of the preparatory phase actions in

the daily Contractor Quality Control Report and in the Preparatory Phase Checklist. Perform the following prior to beginning work on each DFOW:

a. Review each paragraph of the applicable specification sections.

b. Review the Contract drawings.

c. Verify that field measurements are as indicated on construction and/or shop drawings before confirming product orders, in order to minimize waste due to excessive materials.

d. Verify that appropriate shop drawings and submittals for materials and equipment have been submitted and approved. Verify receipt of approved factory test results, when required.

e. Review the testing plan and ensure that provisions have been made to provide the required QC testing.

f. Examine the work area to ensure that the required preliminary work has been completed.

g. Coordinate the schedule of product delivery to designated prepared areas in order to minimize site storage time and potential damage to stored materials.

h. Arrange for the return of shipping/packaging materials, such as wood pallets, where economically feasible.

i. Examine the required materials, equipment and sample work to ensure that they are on hand and conform to the approved shop drawings and submitted data.

j. Discuss specific controls used and construction methods, construction tolerances, workmanship standards, and the approach that will be used to provide quality construction by planning ahead and identifying potential problems for each DFOW.

k. Review the APP and appropriate Activity Hazard Analysis (AHA) to ensure that applicable safety requirements are met, and that required Material Safety Data Sheets (MSDS) are submitted.

l. Review the Cx Plan and ensure all preliminary work items have been completed and documented.

1.11.2 Initial Phase

Notify the Contracting Officer at least two work days in advance of each initial phase. When construction crews are ready to start work on a DFOW, conduct the initial phase with the QC Specialists, the Project Superintendent, and the foreman responsible for that DFOW. Observe the initial segment of the DFOW to ensure that the work complies with Contract requirements. Document the results of the initial phase in the daily CQC Report and in the Initial Phase Checklist. Repeat the initial phase for each new crew to work on-site, or when acceptable levels of specified quality are not being met. Perform the following for each DFOW:

a. Establish the quality of workmanship required.

b. Resolve conflicts.

c. Ensure that testing is performed by the approved laboratory.

d. Check work procedures for compliance with the APP and the appropriate AHA to ensure that applicable safety requirements are met.

e. Review the Cx Plan and ensure all preparatory work items have been completed and documented.

1.11.3 Follow-Up Phase

Perform the following for on-going work daily, or more frequently as necessary, until the completion of each DFOW and document in the daily CQC Report:

a. Ensure the work is in compliance with Contract requirements.

b. Maintain the quality of workmanship required.

c. Ensure that testing is performed by the approved laboratory.

d. Ensure that rework items are being corrected.

e. Assure manufacturers representatives have performed necessary inspections if required and perform safety inspections.

f. Review the Cx Plan and ensure all work items, testing, and documentation has been completed.

1.11.4 Additional Preparatory and Initial Phases

Conduct additional preparatory and initial phases on the same DFOW if the quality of on-going work is unacceptable, if there are changes in the applicable QC organization, if there are changes in the on-site production supervision or work crew, if work on a DFOW is resumed after substantial period of inactivity, or if other problems develop.

1.11.5 Notification of Three Phases of Control for Off-Site Work

Notify the Contracting Officer at least two weeks prior to the start of the preparatory and initial phases.

1.12 SUBMITTAL REVIEW AND APPROVAL

Procedures for submission, review and approval of submittals are described in Section 01 33 00 SUBMITTAL PROCEDURES.

1.13 TESTING

Except as stated otherwise in the specification sections, perform sampling and testing required under this Contract.

1.13.1 Accreditation Requirements

Construction materials testing laboratories must be accredited by a laboratory accreditation authority and will be required to submit a copy of the Certificate of Accreditation and Scope of Accreditation. The laboratory's scope of accreditation must include the appropriate ASTM standards (E 329, C 1077, D 3666, D 3740, A 880, E 543) listed in the

technical sections of the specifications. Laboratories engaged in Hazardous Materials Testing shall meet the requirements of OSHA and EPA. The policy applies to the specific laboratory performing the actual testing, not just the Corporate Office.

1.13.2 Laboratory Accreditation Authorities

Laboratory Accreditation Authorities include the National Voluntary Laboratory Accreditation Program (NVLAP) administered by the National Institute of Standards and Technology at http://ts.nist.gov/ts/htdocs/210/214/214.htm , the American Association of State Highway and Transportation Officials (AASHTO) program at http://www.transportation.org/aashto/home.nsf/frontpage , International Accreditation Services, Inc. (IAS) at http://www.iasonline.org, U. S. Army Corps of Engineers Materials Testing Center (MTC)at http://www.wes.army.mil/SL/MTC/, the American Association for Laboratory Accreditation (A2LA) program at http://www.a2la.org/, the Washington Association of Building Officials (WABO) at http://www.wabo.org/ (Approval authority for WABO is limited to projects within Washington State), and the Washington Area Council of Engineering Laboratories (WACEL) at http://www.wacel.org/labaccred.html (Approval authority by WACEL is limited to projects within Facilities Engineering Command (FEC) Washington geographical area).

1.13.3 Capability Check

The Contracting Officer retains the right to check laboratory equipment in the proposed laboratory and the laboratory technician's testing procedures, techniques, and other items pertinent to testing, for compliance with the standards set forth in this Contract.

1.13.4 Test Results

Cite applicable Contract requirements, tests or analytical procedures used. Provide actual results and include a statement that the item tested or analyzed conforms or fails to conform to specified requirements. If the item fails to conform, notify the Contracting Officer immediately. Conspicuously stamp the cover sheet for each report in large red letters "CONFORMS" or "DOES NOT CONFORM" to the specification requirements, whichever is applicable. Test results must be signed by a testing laboratory representative authorized to sign certified test reports. Furnish the signed reports, certifications, and other documentation to the Contracting Officer via the QC Manager. Furnish a summary report of field tests at the end of each month, per the paragraph entitled "INFORMATION FOR THE CONTRACTING OFFICER".

1.13.5 Test Reports and Monthly Summary Report of Tests

Furnish the signed reports, certifications, and a summary report of field tests at the end of each month to the Contracting Officer. Attach a copy of the summary report to the last daily Contractor Quality Control Report of each month. Provide a copy of the signed test reports and certifications to the OMSI preparer for inclusion into the OMSI documentation.

1.14 QC CERTIFICATIONS

1.14.1 CQC Report Certification

Contain the following statement within the CQC Report: "On behalf of the Contractor, I certify that this report is complete and correct and equipment and material used and work performed during this reporting period is in compliance with the contract drawings and specifications to the best of my knowledge, except as noted in this report."

1.14.2 Invoice Certification

Furnish a certificate to the Contracting Officer with each payment request, signed by the QC Manager, attesting that as-built drawings are current, coordinated and attesting that the work for which payment is requested, including stored material, is in compliance with Contract requirements.

1.14.3 Completion Certification

Upon completion of work under this Contract, the QC Manager shall furnish a certificate to the Contracting Officer attesting that "the work has been completed, inspected, tested and is in compliance with the Contract." Provide a copy of this final QC Certification for completion to the OMSI preparer for inclusion into the OMSI documentation.

1.15 COMPLETION INSPECTIONS

1.15.1 Punch-Out Inspection

Near the completion of all work or any increment thereof, established by a completion time stated in the Contract Clause entitled "Commencement, Prosecution, and Completion of Work," or stated elsewhere in the specifications, the QC Manager and the CA must conduct an inspection of the work and develop a "punch list" of items which do not conform to the approved drawings, specifications and Contract. Include in the punch list any remaining items on the "Rework Items List", which were not corrected prior to the Punch-Out Inspection. Include within the punch list the estimated date by which the deficiencies will be corrected. Provide a copy of the punch list to the Contracting Officer. The QC Manager, or staff, must make follow-on inspections to ascertain that all deficiencies have been corrected. Once this is accomplished, notify the Government that the facility is ready for the Government "Pre-Final Inspection".

1.15.2 Pre-Final Inspection

The Government and QCM will perform this inspection to verify that the facility is complete and ready to be occupied. A Government "Pre-Final Punch List" will be documented by the QC Manager as a result of this inspection. The QC Manager will ensure that all items on this list are corrected prior to notifying the Government that a "Final" inspection with the Client can be scheduled. Any items noted on the "Pre-Final" inspection must be corrected in a timely manner and be accomplished before the contract completion date for the work, or any particular increment thereof, if the project is divided into increments by separate completion dates.

1.15.3 Final Acceptance Inspection

Notify the Contracting Officer at least 14 calendar days prior to the date a final acceptance inspection can be held. State within the notice that all items previously identified on the pre-final punch list will be corrected and acceptable, along with any other unfinished Contract work, by the date of the final acceptance inspection. The Contractor must be represented by the QC Manager, the Project Superintendent, the CA, and others deemed necessary. Attendees for the Government will include the Contracting Officer, other FEAD personnel, and personnel representing the Client. Failure of the Contractor to have all contract work acceptably complete for this inspection will be cause for the Contracting Officer to bill the Contractor for the Government's additional inspection cost in accordance with the Contract Clause entitled "Inspection of Construction."

1.16 DOCUMENTATION

Maintain current and complete records of on-site and off-site QC program operations and activities.

1.16.1 Construction Documentation

Reports are required for each day that work is performed and must be attached to the Contractor Quality Control Report prepared for the same day. Maintain current and complete records of on-site and off-site QC program operations and activities. The forms identified under the paragraph "INFORMATION FOR THE CONTRACTING OFFICER" will be used. Reports are required for each day work is performed. Account for each calendar day throughout the life of the Contract. Every space on the forms must be filled in. Use N/A if nothing can be reported in one of the spaces. The Project Superintendent and the QC Manager must prepare and sign the Contractor Production and CQC Reports, respectively. The reporting of work must be identified by terminology consistent with the construction schedule. In the "remarks" sections of the reports, enter pertinent information including directions received, problems encountered during construction, work progress and delays, conflicts or errors in the drawings or specifications, field changes, safety hazards encountered, instructions given and corrective actions taken, delays encountered and a record of visitors to the work site, quality control problem areas, deviations from the QC Plan, construction deficiencies encountered, meetings held. For each entry in the report(s), identify the Schedule Activity No. that is associated with the entered remark.

1.16.2 Quality Control Validation

Establish and maintain the following in a series of three ring binders. Binders shall be divided and tabbed as shown below. These binders must be readily available to the Contracting Officer during all business hours.

a. All completed Preparatory and Initial Phase Checklists, arranged by specification section.

b. All milestone inspections, arranged by Activity Number.

c. An up-to-date copy of the Testing Plan and Log with supporting field test reports, arranged by specification section.

d. Copies of all contract modifications, arranged in numerical order. Also include documentation that modified work was accomplished.

e. An up-to-date copy of the Rework Items List.

f. Maintain up-to-date copies of all punch lists issued by the QC staff to the Contractor and Sub-Contractors and all punch lists issued by the Government.

g. Commissioning documentation including Cx checklists, schedules, tests, and reports.

1.16.3 Reports from the QC Specialist(s)

Reports are required for each day that work is performed in their area of responsibility. QC Specialist reports shall include the same documentation requirements as the CQC Report for their area of responsibility. QC Specialist reports are to be prepared, signed and dated by the QC Specialists and shall be attached to the CQC Report prepared for the same day.

1.16.4 Testing Plan and Log

As tests are performed, the CA and the QC Manager will record on the "Testing Plan and Log" the date the test was performed and the date the test results were forwarded to the Contracting Officer. Attach a copy of the updated "Testing Plan and Log" to the last daily CQC Report of each month, per the paragraph "INFORMATION FOR THE CONTRACTING OFFICER". Provide a copy of the final "Testing Plan and Log" to the OMSI preparer for inclusion into the OMSI documentation.

1.16.5 Rework Items List

The QC Manager must maintain a list of work that does not comply with the Contract, identifying what items need to be reworked, the date the item was originally discovered, the date the item will be corrected by, and the date the item was corrected. There is no requirement to report a rework item that is corrected the same day it is discovered. Attach a copy of the "Rework Items List" to the last daily CQC Report of each month. The Contractor is responsible for including those items identified by the Contracting Officer.

1.16.6 As-Built Drawings

The QC Manager is required to ensure the as-built drawings, required by Section 01 78 00.00 22 CLOSEOUT SUBMITTALS (PWD ME) are kept current on a daily basis and marked to show deviations which have been made from the Contract drawings. Ensure each deviation has been identified with the appropriate modifying documentation (e.g. PC No., Modification No., Request for Information No., etc.). The QC Manager must initial each revision. Upon completion of work, the QC Manager will furnish a certificate attesting to the accuracy of the as-built drawings prior to submission to the Contracting Officer.

1.17 NOTIFICATION ON NON-COMPLIANCE

The Contracting Officer will notify the Contractor of any detected non-compliance with the Contract. Take immediate corrective action after receipt of such notice. Such notice, when delivered to the Contractor at the work site, shall be deemed sufficient for the purpose of notification. If the Contractor fails or refuses to comply promptly, the

Contracting Officer may issue an order stopping all or part of the work until satisfactory corrective action has been taken. No part of the time lost due to such stop orders will be made the subject of claim for extension of time for excess costs or damages by the Contractor.

1.18 CONSTRUCTION INDOOR AIR QUALITY (IAQ) MANAGEMENT PLAN

Submit an IAQ Management Plan within 15 days after Contract award and not less than 10 days before the preconstruction meeting. Revise and resubmit the Plan as required by the Contracting Officer. Make copies of the final plan available to all workers on site. Include provisions in the Plan to meet the requirements specified below and to ensure safe, healthy air for construction workers and building occupants.

1.18.1 Requirements During Construction

Provide for evaluation of indoor Carbon Dioxide concentrations in accordance with ASTM D6245. Provide for evaluation of volatile organic compounds (VOCs) in indoor air in accordance with ASTM D6345. Use filters with a Minimum Efficiency Reporting Value (MERV) of 8 in permanently installed air handlers during construction.

1.18.1.1 Control Measures

Meet or exceed the requirements of ANSI/SMACNA 008, Chapter 3, to help minimize contamination of the building from construction activities. The five requirements of this manual which must be adhered to are described below:

a. HVAC protection: Isolate return side of HVAC system from surrounding environment to prevent construction dust and debris from entering the duct work and spaces.

b. Source control: Use low emitting paints and other finishes, sealants, adhesives, and other materials as specified. When available, cleaning products shall have a low VOC content and be non-toxic to minimize building contamination. Utilize cleaning techniques that minimize dust generation. Cycle equipment off when not needed. Prohibit idling motor vehicles where emissions could be drawn into building. Designate receiving/storage areas for incoming material that minimize IAQ impacts.

c. Pathway interruption: When pollutants are generated use strategies such as 100 percent outside air ventilation or erection of physical barriers between work and non-work areas to prevent contamination.

d. Housekeeping: Clean frequently to remove construction dust and debris. Promptly clean up spills. Remove accumulated water and keep work areas dry to discourage the growth of mold and bacteria. Take extra measures when hazardous materials are involved.

e. Scheduling: Control the sequence of construction to minimize the absorption of VOCs by other building materials.

1.18.1.2 Moisture Contamination

a. Remove accumulated water and keep work dry.

b. Use dehumidification to remove moist, humid air from a work area.

c. Do not use combustion heaters or generators inside the building.

d. Protect porous materials from exposure to moisture.

e. Remove and replace items which remain damp for more than a few hours.

1.18.2 Requirements after Construction

After construction ends and prior to occupancy, conduct a building flush-out or test the indoor air contaminant levels. Flush-out must be a minimum two-weeks with MERV-13 filtration media as determined by ASHRAE 52.2at 100 percent outside air, or in accordance with LEED GBDC. Air contamination testing must be consistent with EPA's current Compendium of Methods for the Determination of Air Pollutants in Indoor Air, and with the LEED GBDC. After building flush-out or testing and prior to occupancy, replace filtration media. Filtration media must have a MERV of 13 as determined by ASHRAE 52.2.

PART 2 PRODUCTS

Not used.

PART 3 EXECUTION

3.1 PREPARATION

Designate receiving/storage areas for incoming material to be delivered according to installation schedule and to be placed convenient to work area in order to minimize waste due to excessive materials handling and misapplication. Store and handle materials in a manner as to prevent loss from weather and other damage. Keep materials, products, and accessories covered and off the ground, and store in a dry, secure area. Prevent contact with material that may cause corrosion, discoloration, or staining. Protect all materials and installations from damage by the activities of other trades.

-- End of Section --

SECTION 01 50 00.00 22

TEMPORARY CONSTRUCTION FACILITIES AND CONTROLS (PWD ME)
12/14

PART 1 GENERAL

1.1 SUMMARY

Requirements of this Section apply to, and are a component of, each section of the specifications.

1.2 REFERENCES

The publications listed below form a part of this specification to the extent referenced. The publications are referred to within the text by the basic designation only.

AMERICAN WATER WORKS ASSOCIATION (AWWA)

AWWA C511	(1997e1) Standard for Reduced-Pressure Principle Backflow Prevention Assembly

FOUNDATION FOR CROSS-CONNECTION CONTROL AND HYDRAULIC RESEARCH (FCCCHR)

FCCCHR List	(continuously updated) List of Approved Backflow Prevention Assemblies
FCCCHR Manual	(1988e9) Manual of Cross-Connection Control

NATIONAL FIRE PROTECTION ASSOCIATION (NFPA)

NFPA 241	(2009) Standard for Safeguarding Construction,Alteration, and Demolition Operations
NFPA 70	(2014) National Electrical Code

U.S. FEDERAL AVIATION ADMINISTRATION (FAA)

FAA AC 70/7460-1	(2007; Rev K) Obstruction Marking and Lighting

U.S. FEDERAL HIGHWAY ADMINISTRATION (FHWA)

MUTCD	(2000) Manual of Uniform Traffic Control Devices

1.3 SUBMITTALS

Government approval is required for submittals with a "G" designation; submittals not having a "G" designation are for Contractor Quality Control approval. Submit the following in accordance with Section 01 33 00 SUBMITTAL PROCEDURES for Design-Bid-Build projects:

SD-01 Preconstruction Submittals

Construction site plan; G

Traffic control plan; G

SD-06 Test Reports

Backflow Preventer Tests; G

SD-07 Certificates

Backflow Tester Certification; G

Backflow Preventers Certificate of Full Approval; G

1.4 CONSTRUCTION SITE PLAN

Prior to the start of work, submit a site plan showing the locations and dimensions of temporary facilities (including layouts and details, equipment and material storage area (onsite and offsite), and access and haul routes, avenues of ingress/egress to the fenced area and details of the fence installation. Identify any areas where vehicle track pads will be installed to prevent the tracking of mud onto the pavement outside the project site limits. Indicate if the use of a supplemental or other staging area is desired. Show locations of safety and construction fences, site trailers, construction entrances, trash dumpsters, temporary sanitary facilities, dewatering system storage tanks and infiltration pits and worker parking areas. Note that worker parking areas may be located at remote locations from the building or project site. Acceptable Parking areas shall be coordinated with the Contracting Officer.

1.5 BACKFLOW PREVENTERS CERTIFICATE

Certificate of Full Approval from FCCCHR List, University of Southern California, attesting that the design, size and make of each backflow preventer has satisfactorily passed the complete sequence of performance testing and evaluation for the respective level of approval. Certificate of Provisional Approval will not be acceptable.

1.5.1 Backflow Tester Certificate

Prior to testing, submit to the Contracting Officer certification issued by the State or local regulatory agency attesting that the backflow tester has successfully completed a certification course sponsored by the regulatory agency. Tester must not be affiliated with any company participating in any other phase of this Contract.

1.5.2 Backflow Prevention Training Certificate

Submit a certificate recognized by the State or local authority that states the Contractor has completed at least 10 hours of training in backflow preventer installations. The certificate must be current.

PART 2 PRODUCTS

2.1 TEMPORARY SIGNAGE

2.1.1 Bulletin Board

Immediately upon beginning of work, provide a weatherproof glass-covered bulletin board not less than 36 by 48 inches in size for displaying the Equal Employment Opportunity poster, a copy of the wage decision contained in the contract, Wage Rate Information poster, and other information approved by the Contracting Officer. Locate the bulletin board at the project site in a conspicuous place easily accessible to all employees, as approved by the Contracting Officer.

2.1.2 Project and Safety Signs

Construct sign with a face sheet of 4- by 8-foot exterior grade plywood, 1/2-inch thick, mounted on a substantial frame of treated lumber. Provide one coat of lead-free alkyd primer paint and two coats of an exterior type white enamel to frame and sign. Erect signs within 15 days after receipt of the notice to proceed. Correct the data required by the safety sign daily, with light colored metallic or non-metallic numerals.

2.2 TEMPORARY TRAFFIC CONTROL

2.2.1 Haul Roads

At Contractors expense construct access and haul roads necessary for proper prosecution of the work under this contract. Construct with suitable grades and widths; sharp curves, blind corners, and dangerous cross traffic are be avoided. Provide necessary lighting, signs, barricades, and distinctive markings for the safe movement of traffic. The method of dust control, although optional, must be adequate to ensure safe operation at all times. Location, grade, width, and alignment of construction and hauling roads are subject to approval by the Contracting Officer. Lighting must be adequate to assure full and clear visibility for full width of haul road and work areas during any night work operations.

2.2.2 Barricades

Erect and maintain temporary barricades to limit public access to hazardous areas. Whenever safe public access to paved areas such as roads, parking areas or sidewalks is prevented by construction activities or as otherwise necessary to ensure the safety of both pedestrian and vehicular traffic barricades will be required. Securely place barricades clearly visible with adequate illumination to provide sufficient visual warning of the hazard during both day and night.

2.2.3 Fencing

Provide fencing along the construction site at all open excavations and tunnels to control access by unauthorized people. Fencing must be installed to be able to restrain a force of at least 250 pounds against it.

2.2.4 Temporary Wiring

Provide temporary wiring in accordance with NFPA 241 and NFPA 70, Article 305-6(b), Assured Equipment Grounding Conductor Program. Include frequent

inspection of all equipment and apparatus.

2.2.5 Backflow Preventers

Backflow Preventers shall be reduced pressure principle type conforming to the applicable requirements AWWA C511. Provide backflow preventers complete with 150 pound flanged mounted gate valve, stainless steel or bronze, internal parts. The particular make, model/design, and size of backflow preventers to be installed must be included in the latest edition of the List of Approved Backflow Prevention Assemblies issued by the FCCCHR List and be accompanied by a Certificate of Full Approval from FCCCHR List. After installation conduct Backflow Preventer Tests and provide test reports verifying that the installation meets the FCCCHR Manual Standards.

PART 3 EXECUTION

3.1 EMPLOYEE PARKING

Contractor employees will park privately owned vehicles in an area designated by the Contracting Officer. These areas will be within reasonable walking distance of the project site. Contractor employee parking must not interfere with existing and established parking requirements of the Portsmouth Naval Shipyard. Privately-owned vehicles are prohibited from the CIA.

3.2 AVAILABILITY AND USE OF UTILITY SERVICES

3.2.1 Temporary Utilities

Provide temporary utilities required for construction. Materials may be new or used, must be adequate for the required usage, not create unsafe conditions, and not violate applicable codes and standards.

3.2.2 Payment for Utility Services

a. Reasonable amounts of the following utilities will be made available to the Contractor without charge.

   Electricity
   Water

b. The Contractor shall pay all costs incurred in connecting, converting, and transferring the utilities to the work. Make connections, including providing backflow-preventing devices on connections to domestic water lines; providing meters; and providing transformers; and make disconnections. The Contractor shall provide the backflow devices as specified above and NAVFAC PWD ME shop personnel (at the Portsmouth Naval Shipyard only) will install the backflow preventer. The Contractor shall not operate any Shipyard water system valves. The Contractor shall notify the Contracting Officer a minimum of 15 calendar days prior to the desired date of the installation of the backflow device.

3.2.2 Sanitation

Provide and maintain within the construction area minimum field-type sanitary facilities approved by the Contracting Officer and periodically empty wastes into a municipal, district, or Portsmouth Naval Shipyard

sanitary sewage system, or remove waste to a commercial facility. Obtain approval from the system owner prior to discharge into any municipal, district, or commercial sanitary sewer system. Any penalties and / or fines associated with improper discharge will be the responsibility of the Contractor. Coordinate with the Contracting Officer and follow Portsmouth Naval Shipyard regulations and procedures when discharging into the Portsmouth Naval Shipyard sanitary sewer system. Maintain these conveniences at all times without nuisance. Include provisions for pest control and elimination of odors. Government toilet facilities will not be available to Contractor's personnel.

3.2.3 Telephone

Make arrangements and pay all costs for telephone facilities desired.

3.2.4 Obstruction Lighting of Cranes

Provide a minimum of two (2) aviation red or high intensity white obstruction lights on temporary structures (including cranes) over 100 feet above ground level. Light construction and installation must comply with FAA AC 70/7460-1. Lights must be operational during periods of reduced visibility, darkness, and as directed by the Contracting Officer.

3.2.5 Fire Protection

Provide temporary fire protection equipment for the protection of personnel and property during construction. Remove debris and flammable materials daily to minimize potential hazards.

3.3 TRAFFIC PROVISIONS

3.3.1 Maintenance of Traffic

a. Conduct operations in a manner that will not close any thoroughfare or interfere in any way with traffic on railways or highways except with written permission of the Contracting Officer at least 15 calendar days prior to the proposed modification date, and provide to the Contracting Officer a Traffic Control Plan detailing the proposed controls to traffic movement for approval. The plan must be in accordance with State and local regulations and the MUTCD, Part VI. Contractor may move oversized and slow-moving vehicles to the worksite provided requirements of the State of Maine Department of Transportation have been met.

b. Conduct work so as to minimize obstruction of traffic, and maintain traffic on at least half of the roadway width at all times. Obtain approval from the Contracting Officer prior to starting any activity that may obstruct vehicle or pedestrian traffic.

c. Provide, erect, and maintain, at contractors expense, lights, barriers, signals, passageways, detours, and other items, that may be required by the Life Safety Signage and overhead protection.

3.3.2 Protection of Traffic

Maintain and protect traffic on all affected roads during the construction period except as otherwise specifically directed by the Contracting Officer. Measures for the protection and diversion of traffic, including the provision of watchmen and flagmen, erection of barricades, placing of

lights around and in front of equipment the work, and the erection and maintenance of adequate warning, danger, and direction signs, will be as required by the State and local authorities having jurisdiction. Protect the traveling public from damage to person and property. Minimize the interference with public traffic on roads selected for hauling material to and from the site. Investigate the adequacy of existing roads and their allowable load limit. Contractor is responsible for the repair of any damage to roads caused by construction operations.

3.3.3 Rush Hour Restrictions

Do not interfere with the peak traffic flows preceding and during normal operations without notification to and approval by the Contracting Officer.

3.4 CONTRACTOR'S TEMPORARY FACILITIES

3.4.1 Safety

Protect the integrity of any installed safety systems or personnel safety devices. If entrance into systems serving safety devices is required, the Contractor must obtain prior approval from the Contracting Officer. If it is temporarily necessary to remove or disable personnel safety devices in order to accomplish contract requirements, provide alternative means of protection prior to removing or disabling any permanently installed safety devices or equipment and obtain approval from the Contracting Officer.

3.4.2 Administrative Field Offices

Provide and maintain administrative field office facilities within the construction area at the designated site. Government office and warehouse facilities will not be available to the Contractor's personnel.

3.4.3 Storage Area

Construct a temporary 6 foot high chain link fence around trailers and materials. Include plastic strip inserts, colored green, so that visibility through the fence is obstructed. Fence posts may be driven, in lieu of concrete bases, where soil conditions permit. Do not place or store trailers, materials, or equipment outside the fenced area unless such trailers, materials, or equipment are assigned a separate and distinct storage area by the Contracting Officer away from the vicinity of the construction site but within the installation boundaries. Trailers, equipment, or materials must not be open to public view with the exception of those items which are in support of ongoing work on any given day. Do not stockpile materials outside the fence in preparation for the next day's work. Park mobile equipment, such as tractors, wheeled lifting equipment, cranes, trucks, and like equipment within the fenced area at the end of each work day.

3.4.4 Appearance of Trailers

a. Trailers utilized by the Contractor for administrative or material storage purposes must present a clean and neat exterior appearance and be in a state of good repair. Trailers which, in the opinion of the Contracting Officer, require exterior painting or maintenance will not be allowed on installation property.

b. Paint using suitable paint and maintain the temporary facilities. Failure to do so will be sufficient reason to require their removal.

3.4.4 Maintenance of Storage Area

Keep fencing in a state of good repair and proper alignment. Grassed or unpaved areas, which are not established roadways, will be covered with a layer of gravel as necessary to prevent rutting and the tracking of mud onto paved or established roadways, should the Contractor elect to traverse them with construction equipment or other vehicles; gravel gradation will be at the Contractor's discretion. Mow and maintain grass located within the boundaries of the construction site for the duration of the project. Grass and vegetation along fences, buildings, under trailers, and in areas not accessible to mowers will be edged or trimmed neatly.

3.4.5 Security Provisions

Provide adequate outside security lighting at the Contractor's temporary facilities. The Contractor will be responsible for the security of its own equipment; in addition, the Contractor will notify the appropriate law enforcement agency requesting periodic security checks of the temporary project field office.

3.4.6 Laydown Space

Parking and laydown space on the site is limited to the area shown on the plans. The Contractor shall manage the on-site work including equipment, storage trailers, material, material deliveries to allow the work to be completed within the specified contract duration. This may require the Contractor to locate suitable storage off-site and multiple equipment mobilizations to allow the work to be completed. Equipment or materials not used to complete the work shall be removed from the site. If additional offsite storage; additional mobilization or demobilizations, all these costs shall be included in the base bid.

Failure by the Contractor to plan the work based on the space limitations shall not be the basis for any claim nor an equitable price or contract time adjustment.

3.4.7 Weather Protection of Temporary Facilities and Stored Materials

Take necessary precautions to ensure that roof openings and other critical openings in the temporary facilities are monitored carefully. Take immediate actions required to seal off such openings when rain or other detrimental weather is imminent, and at the end of each workday. Ensure that the openings are completely sealed off to protect materials and equipment in the temporary facilities from damage.

3.4.7.1 Building and Site Storm Protection

When a warning of gale force winds is issued, take precautions to minimize danger to persons, and protect the work and nearby Government property. Precautions must include, but are not limited to, closing openings; removing loose materials, tools and equipment from exposed locations; and removing or securing scaffolding and other temporary work. Close openings in the work when storms of lesser intensity pose a threat to the work or any nearby Government property.

3.4.7.2 Condition of Readiness

Unless directed otherwise, comply with:

a. Condition FOUR (Sustained winds of 50 knots or greater expected within 72 hours): Normal daily jobsite cleanup and good housekeeping practices. Collect and store in piles or containers scrap lumber, waste material, and rubbish for removal and disposal at the close of each work day. Maintain the construction site including storage areas, free of accumulation of debris. Stack form lumber in neat piles less than 4 feet high. Remove all debris, trash, or objects that could become missile hazards. Contact Contracting Officer for Condition of Readiness (COR) updates and completion of required actions.

b. Condition THREE (Sustained winds of 50 knots or greater expected within 48 hours): Maintain "Condition FOUR" requirements and commence securing operations necessary for "Condition ONE" which cannot be completed within 18 hours. Cease all routine activities which might interfere with securing operations. Commence securing and stow all gear and portable equipment. Make preparations for securing buildings. Review requirements pertaining to "Condition TWO" and continue action as necessary to attain "Condition THREE" readiness. Contact Contracting Officer for weather and COR updates and completion of required actions.

c. Condition TWO (Sustained winds of 50 knots or greater expected within 24 hours): Curtail or cease routine activities until securing operation is complete. Reinforce or remove form work and scaffolding. Secure machinery, tools, equipment, materials, or remove from the jobsite. Expend every effort to clear all missile hazards and loose equipment from general base areas. Contact Contracting Officer for weather and Condition of Readiness (COR) updates and completion of required actions.

d. Condition ONE. (Sustained winds of 50 knots or greater expected within 12 hours): Secure the jobsite, and leave Government premises.

3.5 PLANT COMMUNICATION

Whenever the Contractor has the individual elements of its plant so located that operation by normal voice between these elements is not satisfactory, the Contractor must install a satisfactory means of communication, such as telephone or other suitable devices and made available for use by Government personnel.

3.6 TEMPORARY PROJECT SAFETY FENCING

As soon as practicable, but not later than 15 days after the date established for commencement of work, furnish and erect temporary project safety fencing at the work site. The safety fencing must be a high visibility orange colored, high density polyethylene grid or approved equal, a minimum of 48 inches high, supported and tightly secured to steel posts located on maximum 10 foot centers, constructed at the approved location. Maintain the safety fencing during the life of the contract and, upon completion and acceptance of the work, will become the property of the Contractor and be removed from the work site.

3.7 CLEANUP

Remove construction debris, waste materials, packaging material and the like from the work site daily. Any dirt or mud which is tracked onto paved or surfaced roadways must be cleaned away. Store within the fenced area described above or at the supplemental storage area any materials resulting from demolition activities which are salvageable. Neatly stacked stored materials not in trailers, whether new or salvaged.

3.8 RESTORATION OF STORAGE AREA

Upon completion of the project remove the bulletin board, signs, barricades, haulroads, and any other temporary products from the site. After removal of trailers, materials, and equipment from within the fenced area, remove the fence that will become the property of the Contractor. Restore to the original or better condition, areas used by the Contractor for the storage of equipment or material, or other use. Gravel used to traverse grassed areas must be removed and the area restored to its original condition, including top soil and seeding as necessary.

-- End of Section --

SECTION 01 57 19.00 22

TEMPORARY ENVIRONMENTAL CONTROLS - PORTSMOUTH NAVAL SHIPYARD (PWD ME)
12/14

PART 1 GENERAL

This specification applies to all Design-Bid-Build and Design-Build projects.

1.1 REFERENCES

The publications listed below form a part of this specification to the extent referenced. The publications are referred to within the text by the basic designation only. Note: This is not an all inclusive list of publications and other references may be applicable.

U.S. NATIONAL ARCHIVES AND RECORDS ADMINISTRATION (NARA)

29 CFR 1910.120	Hazardous Waste Operations and Emergency Response
40 CFR 112	Oil Pollution Prevention
40 CFR 241	Guidelines for Disposal of Solid Waste
40 CFR 243	Guidelines for the Storage and Collection of Residential, Commercial, and Institutional Solid Waste
40 CFR 258	Subtitle D Landfill Requirements
40 CFR 260	Hazardous Waste Management System: General
40 CFR 261	Identification and Listing of Hazardous Waste
40 CFR 262	Standards Applicable to Generators of Hazardous Waste
40 CFR 263	Standards Applicable to Transporters of Hazardous Waste
40 CFR 264	Standards for Owners and Operators of Hazardous Waste Treatment, Storage, and Disposal Facilities
40 CFR 265	Interim Status Standards for Owners and Operators of Hazardous Waste Treatment, Storage, and Disposal Facilities
40 CFR 266	Standards for the Management of Specific Hazardous Wastes and Specific Types of Hazardous Waste Management Facilities
40 CFR 268	Land Disposal Restrictions
40 CFR 270	EPA Administered Permit Programs: The Hazardous Waste Permit Program

40 CFR 272	Approved State Hazardous Waste Management Programs
40 CFR 273	Standards For Universal Waste Management
40 CFR 279	Standards for the Management of Used Oil
40 CFR 280	Technical Standards and Corrective Action Requirements for Owners and Operators of Underground Storage Tanks (UST)
40 CFR 300	National Oil and Hazardous Substances Pollution Contingency Plan
40 CFR 355	Emergency Planning and Notification
40 CFR 372-SUBPART D	Specific Toxic Chemical Listings
40 CFR 761	Polychlorinated Biphenyls (PCBs) Manufacturing, Processing, Distribution in Commerce, and Use Prohibitions
40 CFR 82	Protection of Stratospheric Ozone
49 CFR 171	General Information, Regulations, and Definitions
49 CFR 172	Hazardous Materials Table, Special Provisions, Hazardous Materials Communications, Emergency Response Information, and Training Requirements
49 CFR 173	Shippers - General Requirements for Shipments and Packagings
49 CFR 178	Specifications for Packagings

STATE OF MAINE REGULATIONS

The following STATE OF MAINE REGULATIONS are available on the Internet at: http://www.maine.gov/dep/permits.htm

STATE OF MAINE Statutes are available on the internet at http://www.mainelegislature.org/legis/statues/38/title38ch3sec0.html

MAINE DEP AIR BUREAU CHAPTER 101 Visible Emissions Regulations; http://www.maine.gov/dep/air/rules/index.html

MAINE DEP AIR BUREAU CHAPTER 151 Architectural and Industrial Maintenance(AIM) COATINGS; http://www.maine.gov/dep/air/rules/index.html

MAINE DEP 38 MSRA 420-C	Erosion and Sedimentation Control Law and Rules
MAINE DEP 38 MSRA 420-D	Stormwater Management
MAINE 38 MRSA 439-B	Contractors Certified in Erosion Control (Effective January 1, 2013)

MAINE DEP MSRA 481-490	Site Location of Development
MAINE 38 MSRA 850	Identification of Hazardous Waste
MAINE 38 MSRA 851	Standards for Generators of Hazardous Waste
MAINE 38 MSRA 852	Land Disposal Restrictions
MAINE DEPLW0738	Stormwater Management for Maine
MAINE DEPLW0588	Maine Erosion and Sediment Control Best Management Practices
MAINE 88 MRSA 480A-480Z	Natural Resources Protection Act

MAINE DEP AIR BUREAU CHAPTER 159 Control of Volatile Organic Compounds from Adhesives and Sealants; http://www.maine.gov/dep/air/rules/index.html

1.2 DEFINITIONS

1.2.1 Sediment

Soil and other debris that have eroded and have been transported by runoff water or wind.

1.2.2 Solid Waste

Garbage, refuse, debris, sludge, or other discharged material, including solid, liquid, semisolid, or contained gaseous materials resulting from domestic, industrial, commercial, mining, or agricultural operations. Types of solid waste typically generated at construction sites may include:

a. Green waste: The vegetative matter from landscaping, land clearing and grubbing, including, but not limited to, grass, bushes, scrubs, small trees and saplings, tree stumps and plant roots. Marketable trees, grasses and plants that are indicated to remain, be re-located, or be re-used are not included.

b. Surplus soil: Existing non-hazardous soil that is in excess of what is required for this work, including aggregates intended, but not used, for on-site mixing of concrete, mortars and paving.

c. Debris: Non-hazardous solid material generated during the construction, demolition, or renovation of a structure which exceeds 2.5 inch particle size that is: a manufactured object; plant or animal matter; or natural geologic material (e.g. cobbles and boulders), broken or removed concrete, masonry, and rock asphalt paving; ceramics; roofing paper and shingles. Inert materials may be reinforced with or contain ferrous wire, rods, accessories and weldments. A mixture of debris and other material such as soil or sludge is also subject to regulation as debris if the mixture is comprised primarily of debris by volume, based on visual inspection.

d. Wood: Dimension and non-dimension lumber, plywood, chipboard, hardboard. Treated and/or painted wood that meets the definition of lead contaminated or lead based contaminated paint is not included.

e. Scrap metal: Scrap and excess ferrous and non-ferrous metals such as reinforcing steel, structural shapes, pipe and wire that are recovered

or collected and disposed of as scrap. Scrap metal meeting the definition of hazardous material or hazardous waste is not included.

f. Paint cans: Metal cans that are empty of paints, solvents, thinners and adhesives. If permitted by the paint can label, a thin dry film may remain in the can. NOTE: Aerosol (paint) cans are Hazardous Wastes and must not be disposed of as solid waste or be considered in any definition of "empty", "paint", or "metal" cans.

g. Recyclables: Materials, equipment and assemblies such as doors, windows, door and window frames, plumbing fixtures, glazing and mirrors that are recovered and sold as recyclables.

h. Hazardous Waste: By definition, to be a hazardous waste a material must first meet the definition of a solid waste. Hazardous waste and hazardous debris are special cases of solid waste. They have additional regulatory controls and must be handled separately. They are thus defined separately in this document.

   Material not regulated as solid waste are: nuclear source or byproduct materials regulated under the Federal Atomic Energy Act of 1954 as amended; suspended or dissolved materials in domestic sewage effluent or irrigation return flows, or other regulated point source discharges; regulated air emissions; and fluids or wastes associated with natural gas or crude oil exploration or production.

i. Special Waste: "Special waste" means any solid waste generated by sources other than household and typical commercial establishments that exists in such an unusual quantity or in such a chemical or physical state, or any combination thereof, that may disrupt or impair effective waste management or threaten the public health, human safety or the environment and requires special handling, transportation and disposal procedures. Special waste includes, but is not limited to:

   (1) Ash;

   (2) Industrial and industrial process waste;

   (3) Sludge and dewatered septage;

   (4) Debris from nonhazardous chemical spills and cleanup of those spills;

   (5) Contaminated soils and dredge materials;

   (6) Asbestos and asbestos-containing waste;

   (7) Sand blast grit and non-liquid paint waste;

   (8) High and low pH waste;

   (9) Spent filter media residue; and

   (10) Shredder residue.

1.2.3 Hazardous Debris

As defined in Solid Waste paragraph, debris that contains listed hazardous waste (either on the debris surface, or in its interstices, such as pore

structure) per 40 CFR 261; or debris that exhibits a characteristic of hazardous waste per 40 CFR 261.

1.2.4 Chemical Wastes

This includes salts, acids, alkalies, herbicides, pesticides, and organic chemicals.

1.2.5 Garbage

Refuse and scraps resulting from preparation, cooking, dispensing, and consumption of food.

1.2.6 Hazardous Waste

Any discarded material, liquid, solid, or gas, which meets the definition of hazardous material or is designated hazardous waste by the Environmental Protection Agency or State Hazardous Control Authority as defined in 40 CFR Parts 260-273, as applicable.

The Resource Conservation and Recovery Act (RCRA) governs the management of hazardous wastes. There is no continuously updated, comprehensive list of hazardous waste, as hazardous waste identification is a process that involves many steps. By Regulation, to be considered a hazardous waste, a material first must be classified as a solid waste (40 CFR §261.2). If a waste is a solid waste, it must then be determined if it is hazardous waste (§262.11). Wastes are defined as hazardous by EPA if they are specifically named on one of four lists of hazardous wastes located in Subpart D of 40 CFR 261, or if they exhibit one of four characteristics located in Subpart C of Part 261 (characteristic wastes), which are: ignitability, corrosivity, reactivity and toxicity. Generators are responsible for characterizing their waste and must determine whether a waste exhibits a characteristic by either testing or applying knowledge of the hazardous waste characteristic of the waste (§262.11). Hazardous waste controls also apply to Universal Wastes.

1.2.7 Hazardous Materials

Hazardous materials as defined in 49 CFR 171 and listed in 49 CFR 172.

Hazardous material is any material that:

a. Is regulated as a hazardous material per 49 CFR 173, or

b. Requires a Material Safety Data Sheet (MSDS) per 29 CFR 1910.120, or

c. During end use, treatment, handling, packaging, storage, transportation, or disposal meets or has components that meet or have potential to meet the definition of a hazardous waste as defined by 40 CFR 261 Subparts A, B, C, or D.

Designation of a material by this definition, when separately regulated or controlled by other instructions or directives, does not eliminate the need for adherence to that hazard-specific guidance which takes precedence over this instruction for "control" purposes. Such material include ammunition, weapons, explosive actuated devices, propellants, pyrotechnics, chemical and biological warfare materials, medical and pharmaceutical supplies, medical waste and infectious materials, bulk fuels, radioactive materials, and other materials such as asbestos,

mercury, and polychlorinated biphenyls (PCBs). Nonetheless, the exposure may occur incident to manufacture, storage, use and demilitarization of these items.

1.2.8 Waste Hazardous Material (WHM)

Any waste material which because of its quantity, concentration, or physical, chemical, or infectious characteristics may pose a substantial hazard to human health or the environment and which has been so designated. Used oil not containing any hazardous waste, as defined above, falls under this definition.

1.2.9 Oil or Oily Waste

Oil: Oil of any kind or in any form, including, but not limited to: fats, oils, or greases of animals, fish or marine mammal origin; vegetable oils, including oils from seeds, nuts, fruits, or kernels; and, other oils and greases, including petroleum fuel oil, sludge, synthetic oils, mineral oils, oil refuse or oil mixed with wastes other than dredged oil.

Oily Waste: Those materials which are, or were, mixed with used oil and have become separated from that used oil. Oily wastes also means materials, including wastewaters, centrifuge solids, filter residues or sludges, bottom sediments, tank bottoms, and sorbents which have come into contact with and have been contaminated by, used oil and may be appropriately tested and discarded in a manner which is in compliance with other State and local requirements.

This definition includes materials such as oily rags, "kitty litter" sorbent clay and organic sorbent material. These materials may be land filled provided that:

a. It is not prohibited in other State regulations or local ordinances;

b. The amount generated is "de minimus" (a small amount);

c. It is the result of minor leaks or spills resulting from normal process operations; and

d. All free-flowing oil has been removed to the practical extent possible.

Large quantities of this material, generated as a result of a major spill or in lieu of proper maintenance of the processing equipment, are a solid waste. As a solid waste, a hazardous waste determination must be performed prior to disposal. As this can be an expensive process, it is recommended that this type of waste be minimized through good housekeeping practices and employee education.

1.2.10 Regulated Waste

Those solid waste that have specific additional Federal, State, or local controls for handling, storage, or disposal.

1.2.11 Ozone Depleting Substance (ODS)

Chlorofluorocarbons (CFCs), halons or chlorinated hydrocarbons (such as carbon tetrachloride and methyl chloroform), and hydrochlorofluorocarbon (HCFCs) which have been linked to depletion of the earth's ozone layer are all substances collectively known as ozone depleting substances or ODSs.

Class I or Class II ODS substances are defined and listed in the Clean Air Act Section 602 and 40 CFR 82.

1.2.12 Universal Waste

The universal waste regulations streamline collection requirements for certain hazardous wastes in the following categories: batteries, pesticides, mercury-containing equipment (e.g., thermostats) and lamps (e.g., fluorescent bulbs). The rule is designed to reduce hazardous waste in the municipal solid waste (MSW) stream by making it easier for universal waste handlers to collect these items and send them for recycling or proper disposal. These regulations can be found at 40 CFR 273.

1.3 SUBMITTALS

Government approval is required for submittals with a "G" designation; submittals not having a "G" designation are for Contractor Quality Control approval. Submit the following in accordance with Section 01 33 00 SUBMITTAL PROCEDURES for Design-Bid-Build projects:

SD-01 Preconstruction Submittals

Preconstruction Survey; G

Solid Waste Management Plan; G

Regulatory Notifications; G

Environmental Management Plan (EMP); G

Dirt and Dust Control Plan; G

Contractor Hazardous Material Inventory Log; G

Storm Water Management/Erosion and Sedimentation Control Plan; G

SD-06 Test Reports

Laboratory Analysis; G

Disposal Requirements; G

Erosion and Sediment Control Inspection Reports; G

Solid Waste Management Report; G

SD-11 Closeout Submittals

Some of the records listed below are also required as part of other submittals. For the "Records" submittal, maintain on-site a separate three-ring Environmental Records binder and submit at the completion of the project. Make separate parts to the binder corresponding to each of the applicable sub items listed below.

Storm Water Management and Erosion Control Compliance Notebook; G

Waste Determination Documentation; G

Disposal Documentation for Hazardous and Regulated Waste; G

Contractor 40 CFR Employee Training Records; G

Solid Waste Management Report; G

Contractor Hazardous Material Inventory Log; G

Hazardous Waste/Debris Management; G

Regulatory Notifications; G

1.4 ENVIRONMENTAL PROTECTION REQUIREMENTS

Provide and maintain, during the life of the contract, environmental protection as defined herein. Plan for and provide environmental protective measures to control pollution that develops during normal construction practice. Plan for and provide environmental protective measures required to correct conditions that develop during the construction of permanent or temporary environmental features associated with the project. Comply with Federal, State, and local regulations pertaining to the environment, including water, air, solid waste, hazardous waste and substances, oily substances, and noise pollution.

The Contractor may be required to promptly conduct tests and procedures for the purpose of assessing whether construction operations are in compliance with Applicable Environmental Laws. Analytical work shall be done by qualified laboratories; and where required by law, the laboratories shall be certified.

1.4.1 Environmental Compliance Assessment Training and Tracking System (ECATTS)

The QC Manager is responsible for environmental compliance on projects unless an Environmental Manager is named. The QC Manager (and alternative QC Manager) or Environmental Manager shall complete ECATTS training prior to starting respective portions of on-site work under this contract. If personnel changes occur for any of these positions after starting work, replacement personnel shall complete ECATTS training within 14 days of assignment to the project.

Submit an ECATTS certificate of completion for personnel who have completed the required "Environmental Compliance Assessment Training and Tracking System (ECATTS)" training. This training is web-based and can be accessed from any computer with Internet access using the following instructions.

Register for NAVFAC Environmental Compliance Training and Tracking System, by logging on to https://environmentaltraining.ecatts.com/start. Obtain the password for registration from the Contracting Officer.

This training has been structured to allow Contractor personnel to receive credit under this contract and also to carry forward credit to future contracts. Contractors shall ensure that the QC Manager (and alternate QC Manager) or Environmental Manager review their training plans for new modules or updated training requirements prior to beginning work. Some training modules are tailored for specific State regulatory requirements; therefore, Contractors working in multiple states will be requires to

re-take modules tailored to the state where the contract work is being performed.

ECATTS is available for use by all Contractor and subcontractor personnel associated with this project. These other personnel are encouraged (but not required) to take the training and may do so at their discretion.

1.5 QUALITY ASSURANCE

1.5.1 Preconstruction Survey

Perform a Preconstruction Survey of the project site with the Contracting Officer, and when requested, take photographs showing existing environmental conditions in and adjacent to the site. Submit a report for the record with a copy provided to the Contracting Officer. The Contractor must obtain a camera pass from PNSY security (via Contracting Officer) prior to use of a camera at PNSY. Digital cameras only shall be used. All computer discs shall be turned over to PNSY security (via Contracting Officer) for review and clearance prior to use by the Contractor.

1.5.2 Regulatory Notifications

The Contractor is responsible for preparing all regulatory notification requirements in accordance with Federal, State and local regulations. Regulatory notifications shall be submitted by the Government unless otherwise directed by the Contracting Officer. The Contractor shall submit copies of all regulatory notifications to the Contracting Officer prior to commencement of work activities. Typically, regulatory notifications must be provided for the following (this listing is not all inclusive): demolition, renovation, remediation of controlled substances asbestos, hazardous waste, lead paint.

1.5.3 Environmental Brief

Attend an environmental brief prior to commencing any work on the Shipyard. The brief will be conducted by the Contracting Officer's Representative. The Contractor shall provide the following information: types, quantities, and use of hazardous materials that will be brought onto the activity; types and quantities of wastes/wastewater that may be generated during the contract; types and quantities of oil that will be brought onto the activity; and pollution control measures for spill prevention and control, and any bulk oil storage container information including quantity and type of product stored. Discuss the results of the Preconstruction Survey at this time.

Develop a mutual understanding relative to the details of environmental protection, including measures for protecting natural resources, required reports, required permits, specific permit requirements, and other measures to be taken. Identify additional environmental concerns specific to the site (i.e. historic, archeological and natural resources, Installation Restoration, erosion and sediment control, spill prevention and control, soil management and disposal requirements, etc.).

1.5.4 Environmental Manager

Appoint in writing an Environmental Manager for the project site. The Environmental Manager will be directly responsible for coordinating

Contractor compliance with Federal, State, local, and Shipyard requirements. The Environmental Manager cannot perform the duties of the Project Superintendent or the SSHO. The Environmental Manager will ensure compliance with Hazardous Waste Program requirements (including hazardous waste handling, storage, manifesting, and disposal); implement the Environmental Management Plan; ensure that all environmental permits are obtained, maintained, and closed out; ensure compliance with Storm Water Program Management requirements; ensure compliance with Hazardous Materials (storage, handling, and reporting) requirements; and coordinate any remediation of regulated substances (lead, asbestos, PCB transformers). This can be a collateral position; however, the person in this position must be trained to adequately accomplish the following duties: ensure waste segregation and storage compatibility requirements are met; inspect and manage Satellite Accumulation areas; ensure only authorized personnel add wastes to containers; ensure all Contractor personnel are trained in 40 CFR requirements in accordance with their position requirements; coordinate removal of waste containers; implement, inspect and maintain erosion and sediment controls as required by State law; and maintain the Environmental Records binder and required documentation, ensure compliance with all SPCC requirements, not limited to the proper storage of tanks and containers and their secondary containment, inspections, spill procedures, etc. including environmental permits compliance and close-out.

1.5.5 Contractor 40 CFR Employee Training Records

Prepare and maintain employee training records throughout the term of the contract meeting applicable 40 CFR requirements. The Contractor shall ensure every employee completes a program of classroom instruction or on-the-job training that teaches them to perform their duties in a way that ensures compliance with Federal, State and local regulatory requirements for RCRA Large Quantity Generator. The Contractor will provide a Position Description for each employee, by subcontractor, based on the Davis-Bacon Wage Rate designation or other equivalent method, evaluating the employee's association with hazardous and regulated wastes. This Position Description will include training requirements as defined in 40 CFR 265 for a Large Quantity Generator facility. Submit these training records to the Contracting Officer at the conclusion of the project, unless otherwise directed.

1.6 SOLID WASTE DISPOSAL PLAN

Provide a Solid Waste Disposal Plan in accordance with Paragraph entitled "Solid Waste Management Plan" in Part 3 of this Section.

PART 2 PRODUCTS

Not used.

PART 3 EXECUTION

3.1 ENVIRONMENTAL MANAGEMENT PLAN (EMP)

Prior to initiating any work on site, the Contractor shall meet with the Contracting Officer and the Shipyard's Activity Environmental Staff (Code 106.3) to discuss the proposed Environmental Management Plan and develop a mutual understanding relative to the details of environmental protection required to be addressed in EMP, including measures for protecting natural resources and other measures to be taken. The Environmental Management

Plan shall be submitted in the following format and shall include the elements specified below.

a. Description of the Environmental Management Plan

(1) General overview and purpose

(a) A brief description of each specific plan required by environmental permit or elsewhere in this contract.

(b) The duties and level of authority assigned to the person(s) on the job site that oversee environmental compliance.

(c) A copy of any standard or project specific operating procedures that will be used to effectively manage and protect the environment on the project site.

(d) Communication and training procedures that will be used to convey environmental management requirements to Contractor employees and subcontractors.

(e) Emergency contact information (office phone number, cell phone number, and e-mail address).

(2) General site information including a site plan showing haul routes, stockpile and material laydown and storage areas, dust control, construction trailers locations, sanitary facilities and all other construction facilities required for the work.

(3) A letter signed by an officer of the firm appointing the Environmental Manager and stating that he/she is responsible for managing and implementing the Environmental Program as described in this contract. Include in this letter the Environmental Manager's authority to direct the removal and replacement of non-conforming work.

b. Management of Natural Resources

(1) Land resources

(2) Tree protection

(3) Replacement of damaged landscape features

(4) Temporary construction

(5) Stream crossings

(6) Fish and wildlife resources

(7) Wetland areas

c. Protection of Historical and Archaeological Resources

(1) Objectives

(2) Methods

d. Storm Water Management and Control

(1) Ground cover

(2) Erodible soils

(3) Temporary measures

(a) Mechanical retardation and control runoff

(b) Vegetation and mulch

(4) Effective selection, implementation and maintenance of Best Management practices (BMPs).

e. Protection of the Environment from Waste Derived from Contractor Operations

(1) Control and disposal of solid and sanitary waste.

(2) Control and disposal of hazardous waste (Hazardous Waste Management Section)

This item will consist of the management procedures for all hazardous waste to be generated. The elements of those procedures will coincide with the Activity Hazardous Waste Management Plan will be provided by the Contracting Officer. As a minimum, include the following:

(a) Procedures to be employed to ensure a written waste determination is made for appropriate wastes which are to be generated;

(b) Sampling/analysis plan;

(c) Methods of hazardous waste accumulation/storage (i.e., in tanks and/or containers);

(d) Management procedures for storage, labeling, transportation, and disposal of waste (treatment of waste is not allowed unless specifically noted);

(e) Management procedures and regulatory documentation ensuring disposal of hazardous waste complies with Land Disposal Restrictions (40 CFR 268);

(f) Management procedures for recyclable hazardous materials such as lead-acid batteries, used oil, and the like;

(g) Used oil management procedures in accordance with 40 CFR 279;

(h) Pollution prevention\hazardous waste minimization procedures;

(i) Plans for the disposal of hazardous waste by permitted facilities;

(j) Procedures to be employed to ensure all required employee training records are maintained.

f. Prevention of Releases to the Environment

(1) At a minimum, procedures to prevent releases to the environment will be made available, as well as what notifications to make in the event of a release to the environment.

(2) A Spill Prevention, Control, and Countermeasures (SPCC) Plan is required if work is anticipated to extend beyond 6 months, AND will use bulk oil storage containers 55 gallons or greater, in accordance with 40 CFR 112. All SPCC plans must be approved by Code 106.3. Plans need not be certified by a Professional Engineer but must clearly demonstrate proper management of all tanks and containers on site.

(3) Spill plans should at a minimum include the following:

a) Type of tank or container, quantity stored, type of product stored, location

b) Secondary containment required for tanks/containers 55 gallons or greater; double-wall tanks preferred

c) Tank inspection forms (industry standard, but prefer if they used the Shipyard inspection forms) Records shall be kept for 3 years or for the duration of the project. Tanks shall be inspected monthly.

i) Bulk storage containers (55 gallons or greater require monthly inspection)

ii) Inspection sheet for release of retained storm water from secondary containment.

d) Where spill kits are located

e) If transferring fuel: how often, what type of fuel, and where? The Contractor must coordinate with Contracting Officer Representative and Code 106.3 prior to transferring any fuel.

f) Who to notify in case of a spill (Central Dispatch, NRC, MEDEP as needed)

g) How to clean up a spill safely and how to properly dispose of spill cleanup waste (call for pickup at B357)

g. Regulatory Notification and Permits

List what notifications and permit applications must be made. Demonstrate that those permits have been obtained by including copies of all applicable, environmental permits.

3.1.1 Environmental Management Plan Review

Within 30 calendar days after the Contract award date, the Contractor shall submit the proposed Environmental Management Plan for further discussion, review, and approval. Commencement of work will not begin until the environmental management plan has been approved by the Contracting Officer and Activity Environmental Office.

3.1.2 Licenses, State and Federal permits

The approved State and Federal permits for this project may include the following:

1. Costal Zone Management Act
2. MEDEP Site Location of Development Permit Modification (SLDA)
3. Natural Resource Protection Act Permit (NRPA)

Copies of the approved permit(s) are available from the Contracting Officer. The Contractor shall maintain copies of all permits at the project site. The Contractor shall comply with all the terms and conditions of the approved permits.

Where required by the State regulatory authority, the inspections and certifications will be provided through the services of a Professional Engineer (PE), registered in the State of Maine. Where a PE is not required, the individual must be otherwise qualified by other current State licensure, specific training and prior experience (minimum 5 years). As a part of the quality control plan, which is required to be submitted for approval by the quality control section, provide a sub item containing the name, appropriate professional registration or licence number, address, and telephone number of the professionals or other qualified persons who will be performing the inspections and certifications for each permit.

3.2 PROTECTION OF NATURAL RESOURCES

Preserve the natural resources within the project boundaries and outside the limits of permanent work and as specified in the permits issued for the work. Restore to an equivalent or improved condition upon completion of work. Confine construction activities to within the limits of the work indicated or specified.

Do not disturb fish and wildlife. Do not alter water flows or otherwise significantly disturb the native habitat adjacent to the project and critical to the survival of fish and wildlife, except as indicated or specified.

Except in areas to be cleared, do not remove, cut, deface, injure, or destroy trees or shrubs without the Contracting Officer's permission. Do not fasten or attach ropes, cables, or guys to existing nearby trees for anchorages unless authorized by the Contracting Officer. Where such use of attached ropes, cables, or guys is authorized, the Contractor will be responsible for any resultant damage.

Protect existing trees which are to remain and which may be injured, bruised, defaced, or otherwise damaged by construction operations. Remove displaced rocks from uncleared areas. By approved excavation, remove trees with 30 percent or more of their root systems destroyed. Remove trees and other landscape features scarred or damaged by equipment operations, and replace with equivalent, undamaged trees and landscape features. Obtain Contracting Officer's approval before replacement. Tree wound paint shall not be used for tree cuts or stumps.

3.2.1 Erosion and Sediment Control Measures

a. The State of Maine Erosion and Sediment Control Law requires persons undertaking activity involving filling, displacing or exposing soil or

other earthen materials to take measures to prevent unreasonable erosion of soil or sediment beyond the project site or into a protected natural resource.

At the Portsmouth Naval Shipyard, the Piscataqua River, Upper Meade Pond and Lower Meade Pond are protected natural resources under State Law. Erosion control measures shall be in place before the activity begins, maintained and shall remain in place and functional until the site is permanently stabilized.

Temporary and permanent erosion control measures shall meet, at a minimum, the construction standards presented in the Maine Erosion and Sediment Control Best Management Practices Manual, latest edition. Other techniques may be employed if the Contractor demonstrates to the Contracting Officer that the practice will achieve the required result of no release of sediment per State law.

b. Site work including any filling, excavation, landscaping, and/or other earthwork in excess of one cubic yard of disturbance, shall comply with State of Maine requirements for certification in erosion and sediment control practices within a shoreland zone. A certified individual shall be responsible for management of erosion and sediment control practices at the site each day earth moving activities occur. A certified individual is required to visit the site every day to ensure proper erosion and sediment control practices are followed. As an alternative, the Contractor may choose to contract with a certified individual to supervise the Contractor's work in shoreland areas.

Under the State of Maine's Shoreland Zoning Statutes, the Portsmouth Naval Shipyard is located entirely within the state's Shoreland zone.

c. Storm Water Management/Erosion and Sedimentation Control Plan

(1) The Contractor shall submit a Storm Water Management/Erosion and Sedimentation Control Plan to the Contracting Officer, for review and approval. The Plan shall demonstrate effective selection, implementation and maintenance of Best Management Practices (BMPs) demonstrating compliance with the Shipyard's Maine Pollutant Discharge Elimination System's Multi-Sector General Permit for Stormwater Discharge Associated With Industrial Activity (MSGP) and the State of Maine Erosion and Sediment Control Law for projects in Maine.

The Contractor shall describe and ensure compliance with terms of state general permit for storm water discharge and terms and conditions specified in the approved permits issued for the work.

Provide plan details of chosen temporary erosion and sediment controls to be employed specific to the work site. Provide site plan showing locations for controls. Ensure proposed controls comply with MEDEP approved plans and State regulations.

Submit Storm Water Management and Erosion Control Compliance Notebook at project completion or as directed by the Contracting Officer.

The Plan shall:

(a) Identify potential sources of pollution which may be reasonably

expected to affect the quality of storm water discharge from the site.

(b) Describe and ensure implementation of practices which will be used to reduce the pollutants in storm water discharge at the manufacturing, storage and lay down, and construction sites.

(c) Describe and ensure full compliance with State of Maine General Permit - Construction Activity (No. DEPLW0801 latest edition) and permits issued by the MEDEP and ACOE specific to the project.

(d) Describe and ensure compliance with MEDEP over winter stabilization and construction requirements.

(e) Identify inspections and maintenance schedules for Best Management Practices demonstrating compliance with Maine standards. Maintenance procedures shall address regular cleaning of drainage structures and repair of temporary erosion control structures, as well as a final cleaning of all drainage structures and removal and reclamation of temporary erosion and sediment control BMP's upon completion of the project.

(f) Select applicable management practices from Maine Erosion and Sediment Control BMPs. Present construction details for all proposed erosion and sediment controls.

(g) Include documentation that the individual responsible for management of erosion and sediment control practices at the site is certified in accordance with the State of Maine DEP regulations.

(h) Control of Manufactured Concrete Product Waste Plan

3.2.2 Dust Control

Dust control shall meet the requirements of MEDEP Erosion and Sediment Control BMPs. Keep dust down at all times, including during nonworking periods. Sprinkle or treat, with dust suppressants, the soil at the site, haul roads, and other areas disturbed by operations. Dry power brooming will not be permitted. Instead, use vacuuming, wet mopping, wet sweeping, or wet power brooming. Air blowing will be permitted only for cleaning nonparticulate debris such as steel reinforcing bars. Only wet cutting will be permitted for cutting concrete blocks, concrete, and bituminous concrete. Do not unnecessarily shake bags of cement, concrete mortar, or plaster.

When temporary dust control measures are employed, repetitive treatment shall be applied as needed to accomplish control.

Visible emissions from a fugitive emission source (including stockpiles and roadways) shall not exceed an opacity of 20 percent, except for no more than five (5) minutes in any 1-hour period.

3.2.3 Burnoff

Burnoff of the ground cover is not permitted.

3.2.4 Erosion and Sediment Control Inspection Reports

Inspection reports shall be kept on file at the project site and submitted electronically to the Contracting Officer upon request. The State of

Maine requires inspections of disturbed and impervious areas, erosion and sediment control measures, areas used for storage that are exposed to precipitation, and locations where vehicles enter or exit the site. Inspections shall be performed at least once per week as well as BEFORE and AFTER a storm event. A storm event is any precipitation event with the potential to create runoff but at a minimum should be every storm greater than 0.5 inches of precipitation. Inspection reports shall document compliance with State requirements.

3.3 HISTORICAL AND ARCHAEOLOGICAL RESOURCES

Carefully protect in-place and report immediately to the Contracting Officer historical and archaeological items or human skeletal remains discovered in the course of work. Upon discovery, notify the Contracting Officer. Stop work in the immediate area of the discovery until directed by the Contracting Officer to resume work. The Government retains ownership and control over historical and archaeological resources.

If required for the project, a certified Maine Archeologist shall be on site to monitor excavation work. The qualifications of the Archeologist shall be submitted and approved by the Contracting Officer. A site monitoring report prepared by the Archeologist shall be submitted to the Contracting Officer within 21 calendar days of completing site excavation work.

3.4 SOLID WASTE MANAGEMENT PLAN

Provide a written Solid Waste Disposal Plan (SWDP) to the Contracting Officer, of intended licensed disposal sites for Government approval and for submission to State regulatory agencies. At a minimum, the SWDP shall contain, but not be limited to, the following wastes: stumps and grubbings, excess soil, construction debris, demolition debris, household solid waste, special waste, and industrial solid waste. The submission shall contain the name of the disposal facility, address, facility phone number, and the waste type and quantity to be disposed of at the facility.

If waste from the site is taken to a transfer station, identify the facility or facilities at which the waste is ultimately disposed. Government approval for the facility must be obtained prior to transporting wastes off Government property.

Provide to the Contracting Officer written notification of the quantity of solid waste/debris that is anticipated to be generated by construction. Include in the report the locations where various types of waste will be disposed or recycled. Include letters of acceptance or as applicable, submit one copy of a State license showing such agency's approval of the disposal plan before transporting wastes off Government property.

3.4.1 Solid Waste Management Report

Monthly, submit a solid waste disposal report to the Contracting Officer. For each waste, the report shall state the classification (using the definitions provided in this section), amount, location, and name of the business receiving the solid waste.

The Contractor shall include copies of the waste handling facilities' weight tickets, receipts, bills of sale, and other sales documentation. In lieu of sales documentation, the Contractor may submit a statement

indicating the disposal location for the solid waste which is signed by an officer of the Contractor firm authorized to legally obligate or bind the firm. The sales documentation or Contractor certification will include the receiver's tax identification number and business, EPA or State registration number, along with the receiver's delivery and business addresses and telephone numbers. For each solid waste retained by the Contractor for his/her own use, the Contractor shall submit on the solid waste disposal report the information previously described in this paragraph. Prices paid or received will not be reported to the Contracting Officer unless required by other provisions or specifications of this Contract or public law.

3.4.2 Control and Management of Solid Wastes

Pick up solid wastes, and place in covered containers which are regularly emptied. Do not prepare or cook food on the project site. Prevent contamination of the site or other areas when handling and disposing of wastes. At project completion, leave the areas clean. Recycling is encouraged and can be coordinated with the Contracting Officer and the Shipyard Recycling Coordinator. Remove all solid waste (including non-hazardous debris) from Government property and dispose off-site at an approved landfill. Solid waste disposal off-site must comply with most stringent local, State, and Federal requirements including 40 CFR 241, 40 CFR 243, and 40 CFR 258.

Manage spent hazardous material used in construction including, but not limited to, aerosol cans, waste paint, cleaning solvents, contaminated brushes, and used rags, as per environmental law and Shipyard requirements.

3.4.2.1 Dumpsters

Equip dumpsters with a secure cover and paint the standard Shipyard color. Keep cover closed at all times, except when being loaded with trash and debris. Locate dumpsters behind the construction fence or out of the public view. Empty site dumpsters at least once a week or as needed to keep the site free of debris and trash. If necessary, provide 55 gallon trash containers painted the darker Shipyard color to collect debris in the construction site area. Locate the trash containers behind the construction fence or out of the public view. Empty trash containers at least once a day. For large demolitions, large dumpsters without lids are acceptable, but should not have debris higher than the sides before emptying.

3.5 WASTE DETERMINATION DOCUMENTATION

Complete a Waste Determination form (provided at the pre-construction conference) for all Contractor derived wastes to be generated. Base the waste determination upon either a constituent listing from the manufacturer used in conjunction with consideration of the process by which the waste was generated, EPA approved analytical data and/or laboratory analysis (Material Safety Data Sheets (MSDS) by themselves are not adequate). Attach all support documentation to the Waste Determination form. As a minimum, a Waste Determination form must be provided for the following wastes (this listing is not all inclusive): oil and latex based painting and caulking products, solvents, adhesives, aerosols, petroleum products, and all containers of the original materials.

3.6 CONTRACTOR HAZARDOUS MATERIAL INVENTORY LOG

Submit the "Contractor Hazardous Material Inventory Log"(found at: http://www.wbdg.org/ccb/NAVGRAPH/graphtoc.pdf), which provides information required by EPCRA Sections 312 and 313 along with corresponding Material Safety Data Sheets (MSDS) to the Contracting Officer at the start and at the end of construction (30 days from final acceptance), and update no later than January 31 of each calendar year during the life of the contract. Documentation for any spills/releases, environmental reports or off-site transfers shall be submitted to the Contracting Officer.

3.7 POLLUTION PREVENTION/HAZARDOUS WASTE MINIMIZATION

Minimize the use of hazardous materials and the generation of hazardous waste. Include procedures for pollution prevention/ hazardous waste minimization in the Hazardous Waste Management Section of the Environmental Management Plan. Consult with the Shipyard Environmental Office for suggestions and to obtain a copy of the installation's pollution prevention/hazardous waste minimization plan for reference material when preparing this part of the plan. If no written plan exists, obtain information by contacting the Contracting Officer. Describe the types of the hazardous materials expected to be used in the construction when requesting information.

3.8 WHM/HW MATERIALS PROHIBITION

No waste hazardous material or hazardous waste shall be disposed of on Government property. No hazardous material shall be brought onto Government property that does not directly relate to requirements for the performance of this contract.

Incidental materials used to support the contract including, but not limited to, aerosol cans, waste paint, cleaning solvents, contaminated brushes, rags, clothing, etc. may be hazardous wastes and shall be disposed by the Government as described in the Hazardous Waste Management Section. The list is illustrative rather than inclusive. Universal wastes must be managed with controls similar to those for hazardous waste.

The Contractor is not authorized to discharge any materials to sanitary sewer, storm drain, or to the Piscataqua River or conduct waste treatment or disposal on Government property without written approval of the Contracting Officer.

3.9 HAZARDOUS MATERIAL MANAGEMENT

No hazardous material shall be brought onto Government property that does not directly relate to requirements for the performance of this contract.

Include hazardous material control procedures in the Safety Plan. Address procedures and proper handling of hazardous materials, including the appropriate transportation requirements. Submit a MSDS and estimated quantities to be used for each hazardous material to the Contracting Officer prior to bringing the material on the Shipyard. Typical materials requiring MSDS and quantity reporting include, but are not limited to, oil and latex based painting and caulking products, solvents, adhesives, aerosol, and petroleum products. At the end of the project, provide the Contracting Officer with the maximum quantity of each material that was present at the site at any one time, the dates the material was present, the amount of each material that was used during the project, and how the

material was used. Ensure that hazardous materials are utilized in a manner that will minimize the amount of hazardous waste that is generated. Ensure that all containers of hazardous materials have NFPA labels or their equivalent. Keep copies of the MSDS for hazardous materials on site at all times and provide them to the Contracting Officer at the end of the project. Certify that all hazardous materials removed from the site are hazardous materials and do not meet the definition of hazardous waste per 40 CFR 261.

3.10 PETROLEUM PRODUCTS AND REFUELING

Conduct the fueling and lubricating of equipment and motor vehicles in a manner that protects against spills and evaporation. Manage all used oil generated on site in accordance with 40 CFR 279. Determine if any used oil generated while on-site exhibits a characteristic of hazardous waste. Used oil containing 1000 parts per million of solvents will be considered a hazardous waste and disposed of at Contractor's expense. Used oil mixed with a hazardous waste will also be considered a hazardous waste.

3.10.1 Oily and Hazardous Substances

Prevent oil or hazardous substances from entering the ground, drainage areas, or navigable waters. In accordance with 40 CFR 112, surround all temporary fuel oil or petroleum storage tanks with a temporary berm or containment of sufficient size and strength to contain the contents of the tanks, plus 10 percent freeboard for precipitation. The berm will be impervious to oil for 72 hours and be constructed so that any discharge will not permeate, drain, infiltrate, or otherwise escape before cleanup occurs.

3.10.2 Inadvertent Discovery of Petroleum Contaminated Soil or Hazardous Wastes

If petroleum contaminated soil or suspected hazardous waste is found during construction that was not identified in the contract documents, the Contractor shall immediately notify the Contracting Officer. The Contractor shall not disturb this material until authorized by the Contracting Officer.

3.11 FUEL TANKS

Petroleum products and lubricants required to sustain up to 30 days of construction activity may be kept on site. Storage and refilling practices shall comply with 40 CFR Part 112. Secondary containment shall be provided and be no less than 110 percent of the tank volume plus five inches of free-board. If a secondary berm is used for containment then the berm shall be impervious to oil for 72 hours and be constructed so that any discharge will not permeate, drain, infiltrate, or otherwise escape before cleanup occurs. Drips pans are required and the tanks must be covered during inclement weather.

3.12 RELEASES/SPILLS OF OIL AND HAZARDOUS SUBSTANCES

Exercise due diligence to prevent, contain, and respond to **ALL** spills of hazardous material, hazardous substances, hazardous waste, sewage, regulated gas, petroleum, lubrication oil, and other substances regulated by environmental law. In the event of a spill, take prompt, effective action to stop, contain, curtail, or otherwise limit the amount, duration, and severity of the spill/release. In the event of **ANY** releases of oil and

hazardous substances, chemicals, or gases; immediately (within 15 minutes) notify the Shipyard Fire Department and the Shipyard's Command Duty Officer, and the Contracting Officer. If the Contractor's response is inadequate, the Navy may respond. If this should occur, the Contractor will be required to reimburse the Government for spill response assistance and analysis.

The Contractor is responsible for verbal and written notifications as required by the Federal 40 CFR 355, State, and local regulations and Navy Instructions. Spill response shall be in accordance with 40 CFR 300 and applicable State and local regulations. Contain and clean up these spills without cost to the Government. If Government assistance is requested or required, the Contractor will reimburse the Government for such assistance. Provide copies of the written notification and documentation that a verbal notification was made within 20 days.

Maintain spill cleanup equipment and materials at the work site. Clean up all hazardous and non-hazardous (WHM) waste spills. The Contractor shall reimburse the Government for all material, equipment, and clothing generated during any spill cleanup. The Contractor shall reimburse the Government for all costs incurred including sample analysis materials, equipment, and labor if the Government must initiate its own spill cleanup procedures, for Contractor responsible spills, when:

a. The Contractor has not begun spill cleanup procedure within one hour of spill discovery/occurrence, or

b. If, in the Government's judgment, the Contractor's spill cleanup is not adequately abating life threatening situation and/or is a threat to any body of water or environmentally sensitive areas.

3.13 CONTROL AND MANAGEMENT OF HAZARDOUS WASTES

At the time of the pre construction conference the Contractor will be briefed and provided written information regarding hazardous waste management. The Government will provide technical and oversight assistance in all aspects of hazardous waste management.

3.13.1 General

All hazardous wastes generated within the confines of the Shipyard shall be disposed of by the Government. Accordingly, all hazardous wastes generated by the Contractor to accomplish requirements of this contract shall be considered Government-generated, and shall be disposed of by the Government. Contractor shall not bring hazardous wastes onto Government property. Hazardous wastes shall be handled in compliance with 40 CFR 260-268, 273, 279 and State of Maine MEDEP Regulations Chapter 850 to 855. For hazardous waste spills, the Contractor shall call the Shipyard Fire Department, extension 2333, immediately, then verbally notify the Contracting Officer.

3.13.2 Containers

Contractor shall use only Government-furnished, Government-labeled containers for the packaging of hazardous soils and wastes. Containers will be delivered to the Contractor's work area following receipt and approval of the Management Plan required above.

a. Contractor shall segregate hazardous and non-hazardous soils/wastes.

Hazardous soils/wastes shall be placed into containers provided by the Government. Full containers shall be turned over to the Government at Building 357 (Code 106.3). While hazardous soils/wastes are in the control of the Contractor, such hazardous soils/wastes shall be handled in accordance with Shipyard requirements.

b. Notify the Contracting Officer or the designated representative daily to ensure containers of hazardous and universal wastes are secured by the Government prior to the end of the shift or as arranged and approved by Code 106. All hazardous wastes shall be placed in a Government approved hazardous waste satellite accumulation area or turned over directly to Building 357. Prior to Government acceptance of the containers, the Contractor shall provide the certification required by the "Submittals" paragraph of this Section, and such additional information regarding contents of the containers as may be required by the Government representative for proper classification of the wastes.

3.13.3 Facility Hazardous Waste Generator Status

Portsmouth Naval Shipyard is designated as a Large Quantity Generator. All work conducted within the boundaries of the Shipyard must meet the regulatory requirements of this generator designation. The Contractor shall comply with all provisions of Federal, State and local regulatory requirements applicable to this generator status regarding training and storage, handling, and disposal of all construction derived wastes.

3.13.4 Hazardous Waste/Debris Management

Identify all construction activities which will generate hazardous waste/debris and universal wastes. Provide a documented waste determination for all resultant waste streams. Hazardous waste/debris will be identified, labeled, handled, stored, and disposed of in accordance with all Federal, State, and local regulations including 40 CFR 261, 40 CFR 262, 40 CFR 263, 40 CFR 264, 40 CFR 265, 40 CFR 266, and 40 CFR 268.

Hazardous wastes and universal wastes will also be managed in accordance with the approved Hazardous Waste Management Section of the Environmental Protection Plan. Daily worksite accumulation of hazardous wastes and universal wastes shall be in approved containers in accordance with 49 CFR 173 and 49 CFR 178. Hazardous waste generated within the confines of Government facilities will be identified as being generated by the Government.

Prior to removal of any hazardous waste from Government property, all hazardous waste manifests must be signed by Shipyard personnel from the Shipyard Environmental Office. No hazardous waste will be brought onto Government property. Provide to the Contracting Officer a copy of waste determination documentation for any solid waste streams that have any potential to be hazardous waste or contain any chemical constituents listed in 40 CFR 372-SUBPART D. For hazardous wastes spills, verbally notify the Contracting Officer immediately.

3.13.4.1 Regulated Waste Storage/Satellite Accumulation/90 Day Storage Areas

If the work requires the temporary storage/collection of regulated or hazardous wastes, the Contractor will request the establishment of a

Regulated Waste Storage Area, a Satellite Accumulation Area, or a 90 Day Storage Area at the point of generation.

The Contractor must submit a request in writing to the Contracting Officer providing the following information:

Contract Number	_____	Contractor	_____
Haz/Waste or Regulated Waste POC	_____	Phone Number	_____
Type of Waste	_____	Source of Waste	_____
Emergency POC	_____	Phone Number	_____

Location of the Site: _____
(Attach Site Plan to the Request)

Attach a waste determination form. Allow ten working days for processing this request. The designated area where waste is being stored shall be barricaded and a sign identifying as follows:

"DANGER - UNAUTHORIZED PERSONNEL KEEP OUT"

3.13.4.2 Sampling and Analysis of HW

a. Waste Sampling

Sample waste in accordance with Navy Environmental Compliance Sampling and Field Testing Procedures Manual, NAVSEA T0300-AZ-PRO-010, 01 April 2013. Each sampled drum or container will be clearly marked with the Contractor's identification number and cross referenced to the chemical analysis performed; sampling shall be in accordance with NAVSHIPY PTSMH INST 5090.8 B.

b. Laboratory Analysis

Follow the analytical procedure and methods in accordance with the EP-SLU-846. The Contractor will provide all analytical results and reports performed to the Contracting Officer, and Code 106.3 Environmental Sampling Project Manager.

All laboratory analysis for hazardous waste identification must be performed by a laboratory complaint with OPNAVINST 5090.1 Chapter 7-3.3. Proof of compliance must be made available upon request. All analyses provided by laboratories that are not compliant with the stated requirements will be rejected.

c. Analysis Type

Identify waste material/hazardous waste by analyzing for properties that are reasonably suspected of the waste. Soil and other materials may require specific analysis for acceptance to a disposal facility - please check with personnel at the HWSF before choosing parameters.

3.13.4.3 Asbestos Certification

Items, components, or materials disturbed by or included in work under

this contract may involve asbestos. Other materials in the general area around where work will be performed may contain asbestos. All thermal insulation, in all work areas, should be considered to be asbestos unless positively identified by conspicuous tags or previous laboratory analysis certifying them as asbestos free.

Inadvertent discovery of non-disclosed asbestos that will result in an abatement action requires a change in scope before proceeding. Upon discovery of asbestos containing material not identified in the contract documents, the Contractor shall immediately stop all work that would generate further damage to the material, evacuate the asbestos exposed area, and notify the Contracting Officer for resolution of the situation prior to resuming normal work activities in the affected area. The Contractor will not remove or perform work on any asbestos containing materials without the prior approval of the Contracting Officer. The Contractor will not engage in any activity, which would remove or damage such materials or cause the generation of fibers from such materials.

Asbestos containing waste shall be managed and disposed of in accordance with applicable environmental law. Asbestos containing waste shall be manifested and the manifest provided to the Contracting Officer. Disposal of asbestos-containing waste must be coordinated with the Navy.

3.13.4.4 Hazardous Waste Disposal

Control of stored waste, packaging, sampling, analysis, and disposal will be determined by the details in the contract. The requirements for jobs in the following paragraphs will be used as the guidelines for disposal of any hazardous waste generated.

a. Responsibilities for Contractor's Disposal

Contractor responsibilities include any generation of WHM/HW requiring Contractor disposal of solid waste or liquid.

(1) The Contractor agrees to provide all service necessary for the final treatment/disposal of the hazardous material/waste in accordance with all local, State and Federal laws and regulations, and the terms and conditions of the contract within sixty (60) days after the materials have been generated. These services will include all necessary personnel, labor, transportation, packaging, detailed analysis (if required for disposal, and/or transportation, including manifesting or completing waste profile sheets, equipment, and the compilation of all documentation is required).

(2) Contain all waste in accordance with 40 CFR 260, 40 CFR 261, 40 CFR 262, 40 CFR 263, 40 CFR 264, 40 CFR 265, 40 CFR 266, 40 CFR 268, 40 CFR 270, 40 CFR 272, 40 CFR 273, 40 CFR 279, 40 CFR 280, and 40 CFR 761.

(3) Obtaining a representative sample of the material generated for each job done to provide waste stream determination.

(4) Analyzing for each sample taken and providing analytical results to the Contracting Officer. Provide two copies of the results.

(5) Determine the DOT proper shipping names for all waste (each container requiring disposal) and will demonstrate how this

determination is developed and supported by the sampling and analysis requirements contained herein to the Contracting Officer.

Contractor Disposal Turn-In Requirements

For any waste hazardous materials or hazardous waste generated which requires the Contractor to dispose of, the following conditions must be complied with in order to be acceptable for disposal:

a. Drums compatible with waste contents and drums meet DOT requirements for 49 CFR 173 for transportation of materials.

b. Drums banded to wooden pallets. No more than three (3) 55 gallon drums to a pallet, or two (2) 85 gallon over packs.

c. Band using 1-1/4 inch minimum band on upper third of drum.

d. Recovery materials label (provided by Code 106.321) located in middle of drum, filled out to indicate actual volume of material, name of material manufacturer, other vendor information as available.

e. Always have three (3) to five (5) inches of empty space above volume of material. This space is called 'outage'.

f. Provide disposal documentation for hazardous and regulated waste.

3.13.5 Class I ODS Prohibition

Class I ODS as defined herein will not be used in the performance of this contract, nor be provided as part of the equipment. This prohibition will be considered to prevail over any other provision, specification, drawing, or referenced documents. Regulations related to the protection of stratosphere ozone may be found in 40 CFR 82.

Heating and air conditioning technicians must be certified through an EPA-approved program. Copies of certifications shall be maintained at the employees' place of business and be carried as a wallet card by the technician, as provided by environmental law. Accidental venting of a refrigerant is a release and shall be reported to the Contracting Officer.

3.13.5.1 Universal Waste/e-Waste Management

Universal waste including but not limited to some mercury containing building products such florescent lamps, mercury vapor lamps, high pressure sodium lamps, CRTs, batteries, aerosol paint containers, electrical equipment containing PCBs, and consumed electronic devices, shall be managed in accordance with applicable environmental law.

3.14 DUST CONTROL

Dust control shall meet the requirements of MEDEP Erosion and Sediment Control BMPs. Keep dust down at all times, including during nonworking periods. Sprinkle or treat, with dust suppressants, the soil at the site, haul roads, and other areas disturbed by operations. Dry power brooming will not be permitted. Instead, use vacuuming, wet mopping, wet sweeping, or wet power brooming. Air blowing will be permitted only for cleaning nonparticulate debris such as steel reinforcing bars. Only wet cutting will be permitted for cutting concrete blocks, concrete, and bituminous concrete. Do not unnecessarily shake bags of cement, concrete mortar, or

plaster. When temporary dust control measures are employed, repetitive treatment shall be applied as needed to accomplish control. Visible emissions from a fugitive emission source (including stockpiles and roadways) shall not exceed an opacity of 20 percent, except for no more than five (5) minutes in any 1-hour period.

3.14.1 Dirt and Dust Control Plan

Submit truck and material haul routes along with a plan for controlling dirt, debris, and dust on base roadways. As a minimum, identify in the plan the subcontractor and equipment for cleaning along the haul route and measure the reduce dirt, dust, and debris form roadways.

3.15 ABRASIVE AND/OR WET BLASTING

3.15.1 Blasting Operations

(a) Abrasive Blasting

The use of silica sand is prohibited in sandblasting.

Provide tarpaulin drop cloths and windscreens to enclose abrasive blasting operations to confine and collect dust, abrasive, agent, paint chips, and other debris.

Abrasive blasting shall take place in containments with emissions vented through bag house filters and emissions shall be limited to 10% opacity on a six minute block average. The bag houses must be used to control PM emission and operated properly at all times abrasive blasting is being performed.

(b) Wet Blasting

The use of wet blasting requires the capture and proper disposal of all wastes, including the blasting water, associated with the process.

3.15.2 Disposal Requirements

Submit analytical results of the wastes and/or debris generated from blasting operations per paragraph entitled Laboratory Analysis of this section. Hazardous waste generated from blasting operations will be managed in accordance with paragraph entitled "Hazardous Waste/Debris Management" of this section and with the approved HWMP. Concrete wash water and oily waste generated from blasting operations will be disposed of in accordance with the policy outlined in these specifications.

3.16 SPRAY PAINTING

3.16.1 Spray Painting Operations

Spray painting operations shall take place in containment. Emissions from spray painting shall vent through air filters and are limited to 10% opacity on a six minute block average. The air filters are used to control particulate emissions.

3.17 NOISE

Make the maximum use of low-noise emission products, as certified by the EPA or sound deadening enclosures to limit noise within the project site.

Blasting or the use of explosives will not be permitted. Confine any operations that may generate excessive noise to the period between 7 a.m. and 5 p.m., Monday through Friday, exclusive of holidays, unless otherwise specified or approved by the Contracting Officer. The maximum permissible sound pressure levels, as measured at the limits of the Navy Property boundary, shall not exceed the maximum noise levels as specified in the Town of Kittery's Ordinance and all applicable OHSA Regulations.

3.18 MERCURY MATERIALS

Mercury is prohibited in the construction of this facility, unless specified otherwise, and with the exception of mercury vapor lamps and fluorescent lamps. Dumping of mercury-containing materials and devices such as mercury vapor lamps, fluorescent lamps, and mercury switches, in rubbish containers is prohibited. Remove without breaking, pack to prevent breakage, and transport out of the activity in an unbroken condition for disposal as directed. Immediately report to the Shipyard Environmental Office and the Contracting Officer instances of breakage or mercury spillage. Clean mercury spill area to the satisfaction of the Contracting Officer. Cleanup of a mercury spill shall not be recycled and shall be managed as a hazardous waste for disposal.

3.19 CONCRETE WASH WATER

Concrete wash water shall be defined as water or storm water that has come into contact with cement, uncured concrete, concrete dust or other material of a similar nature generated during construction activities including, but not limited to, washing down ready-mix trucks, mixers and wheelbarrows, tools, concrete areas; masonry cutting operations; cleaning up of split mortar or block fill; hosing away excess materials.

3.19.1 Concrete Wash Water

Concrete wash water shall be defined as water, pressure washing water, or storm water that has come into contact with cement, uncured concrete, concrete dust or other material of a similar nature generated during construction activities including, but not limited to, washing down ready-mix trucks, mixers and wheelbarrows, pre casting equipment, forms, manufactured cast concrete sections, tools, concrete areas; masonry cutting operations; cleaning up of split mortar or block fill; hosing away excess materials.

Water or storm water that has come into contact with pre casting equipment, forms, tools, etc which have been subjected to oil based form release agents will be considered an oily waste if a visual inspection indicates any signs of oil residual. Oily wastes shall be collected and disposed of in accordance with Shipyard policy.

3.19.2 Pollution Prevention

Store dry and wet concrete supplies under cover away from drainage areas. Concrete wash water shall not be released to the storm drain system, sewer system, roadways or other uncontained impervious surfaces, or to natural waterways including the Piscataqua River and its tributaries. Contractor shall take all precautions necessary to prevent rainwater or stormwater runoff to come in contact with concrete wash water. Divert clean stormwater and roof runoff from contact with concrete wash water. Contractor shall take all measures necessary to minimize the volume of concrete wash water generated. Contractor shall protect all waterways,

catch basins and storm drain structures from potential discharges of concrete wash water. Contractor shall collect and control concrete wash water separately from waste water determined to be oily waste.

3.19.3 On-Shipyard Disposal

Small volumes of concrete wash water generated can be disposed on-site under certain conditions when approved by the Contracting Officer. When approved, small volumes of concrete wash water can be directed onto an area of open soil such as a trench or shallow pit to allow it to be absorbed and neutralized by the soil. The area shall be constantly monitored during filling operations to prevent overflow.

3.19.4 On-Shipyard Containment Structures

Concrete wash water shall be gathered and contained on site for removal and disposal at a facility designed and approved for disposal of concrete wash water. Under no circumstances shall clean water be added to concrete wash water for dilution purposes or any other reason. Containment structures shall be watertight and provide adequate freeboard to contain the wash water, solids, and rainfall to prevent overflow. Cover wash out structures prior to predicted rainfall events to prevent rainfall from entering the containment structure. Ensure that concrete washout containers are watertight and are designed to promote evaporation. Washout shall occur in designated areas only that have been approved by the Contracting Officer Representative.

Inspect all concrete washout facilities daily to determine filled capacity. Remove all materials from containment structures when 75% fill capacity has been reached. Remove liquids or cover structures before predicted rainstorms to prevent overflows and infiltration of rainwater. Inspect structures for holes and tears daily and repair to maintain watertight conditions.

Hardened solids can be removed from containment structures and recycled, reused, or disposed of per regulatory requirements. Liquids remaining in the containment structure shall be vacuumed and disposed of at a facility designated for disposal of concrete wash water.

3.19.5 Off-Shipyard Disposal

Contractor shall provide careful oversight to prevent improper dumping of concrete wash water. Contractor shall ensure companies use proper disposal facilities designated for concrete wash water disposal. The Contractor shall be responsible for any clean up resulting from improper control of concrete wash water.

3.20 DISPOSAL OF CHLORINATED WATER AND DECHLORINATION REQUIREMENTS

Chlorinated water created during disinfection procedures shall not be directly discharged to storm drains or sanitary sewers without prior dechlorination. Chlorinated water shall be neutralized by the controlled addition of a reducing chemical such as sodium thiosulfate, sodium bisulfate, sodium sulfite, sulfur dioxide or ascorbic acid (commonly known as Vitamin C). Dechlorination shall be sufficiently effective to reduce total residual chlorine concentration to existing water system chlorine levels (typically 1.2 to 1.5 mg/l).

-- End of Section --

SECTION 01 62 35

RECYCLED/RECOVERED/BIOBASED MATERIALS

05/13

PART 1 GENERAL

1.1 REFERENCES

The publications listed below form a part of this specification to the extent referenced. The publications are referred to within the text by the basic designation only.

U.S. NATIONAL ARCHIVES AND RECORDS ADMINISTRATION (NARA)

40 CFR 247	Comprehensive Procurement Guideline for Products Containing Recovered Materials
48 CFR 23	Environment, Energy and Water Efficiency, Renewable Energy Technologies, Occupational Safety, and Drug-Free Workplace

1.2 OBJECTIVES

Government procurement policy is to acquire, in a cost effective manner, items containing the highest percentage of recycled, recovered and biobased materials practicable consistent with maintaining a satisfactory level of competition without adversely affecting performance requirements or exposing suppliers' employees to undue hazards from the recovered materials. The Environmental Protection Agency (EPA) and the United Stats Department of Agriculture (USDA)has designated certain items which must contain a specified percent range of recovered or recycled materials. EPA and USDA designated products specified in this contract comply with the stated policy and with the EPA and USDA guidelines. Make all reasonable efforts to use recycled, recovered and biobased materials in providing the EPA and USDA designated products and in otherwise utilizing recycled, recovered and biobased materials in the execution of the work.

1.3 SUBMITTALS

Government approval is required for submittals with a "G" designation; submittals not having a "G" designation
are for Contractor Quality Control approval. Submit the following in accordance with Section 01 33 00 SUBMITTAL
PROCEDURES for Design-Bid-Build projects:

SD-01 Preconstruction Submittals

Biobased Products; G

1.4 DESIGNATED ITEMS INCORPORATED IN THE WORK

Various sections of the specifications contain requirements for materials that have been designated by EPA and USDA as being products which are or can be made with recovered or recycled, recovered and biobased materials.

These items, when incorporated into the work under this contract, shall contain at least the specified percentage of recycled or recovered materials or biobased unless adequate justification (non-availability) for non-use is provided. When a designated item is specified as an option to a non-designated item, the designated item requirements apply only if the designated item is used in the work.

1.5 PROPOSED ITEMS INCORPORATED IN THE WORK

Products other than those designated by EPA and USDA are still being researched and are being considered for future Comprehensive Procurement Guideline (CPG) and USDA's Federal Procument Preferences (FPP) designations. It is recommended that these items, when incorporated in the work under this contract, contain the highest practicable percentage of recycled, recovered and biobased materials, provided specified requirements are also met.

1.6 LISTED ITEMS USED IN CONDUCT OF THE WORK BUT NOT INCORPORATED IN THE WORK

Many products listed in 40 CFR 247 and 48 CFR 23 have been designated or proposed by EPA and USDA to include recycled, recovered and biobased materials that may be used by the Contractor in performing the work but will not be incorporated into the work. These products include office products, temporary traffic control products, and pallets. It is recommended that these non-construction products, when used in the conduct of the work, contain the highest practicable percentage of recycled, recovered and biobased materials and that these products be recycled when no longer needed.

1.7 BIOPREFERRED FPP

Utilize products and material made from biobased materials to the maximum extent possible without jeopardizing the intended end use or detracting from the overall quality delivered to the end user. All supplies and materials shall be of a type and quality that conform to applicable specifications and standards.

Biobased products that are designated for preferred procurement under USDA’s BioPreferred program must meet the required minimum biobased content. Refer to http://www.biopreferred.gov/ProductCategories.aspx for the product categories and http://www.biopreferred.gov/bioPreferredCatalog/faces/jsp/catalogLanding.jsp for the BioPreferred Catalog. Submit data for the biobased products to include biobased content and source of biobased material; indicating the name of the manufacturer, cost of each material, and the intended use of each of the materials that are to be used in carrying out the requirements of the contract.

PART 2 PRODUCTS

Not Used

PART 3 EXECUTION

Not Used

-- End of Section --

SECTION 01 74 19.00 22

CONSTRUCTION AND DEMOLITION WASTE MANAGEMENT (PWD ME)
12/14

PART 1 GENERAL

This specification applies to all Design-Bid-Build and Design-Build projects.

1.1 GOVERNMENT POLICY

Government policy is to apply sound environmental principles in the design, construction and use of facilities. As part of the implementation of that policy the Contractor shall: (1) practice efficient waste management when sizing, cutting, and installing products and materials and (2) use all reasonable means to divert construction and demolition waste from landfills and incinerators and to facilitate their recycling or reuse.

1.2 SUBMITTALS

Government approval is required for submittals with a "G" designation; submittals not having a "G" designation are for Contractor Quality Control approval. Submit the following in accordance with Section 01 33 00 SUBMITTAL PROCEDURES for Design-Bid-Build projects:

SD-01 Preconstruction Submittals

Waste Management Plan; G

SD-11 Closeout Submittals

Records; G

1.3 WASTE MANAGEMENT PLAN

A waste management plan shall be submitted within 15 calendar days after contract award and prior to initiating any site preparation work. The plan shall include the following:

a. Name of individuals on the Contractor's staff responsible for waste prevention and management.

b. Actions that will be taken to reduce solid waste generation, including coordination with subcontractors to ensure awareness and participation.

c. Description of the regular meetings to be held to address waste management.

d. Description of the specific approaches to be used in recycling/reuse of the various materials generated, including the areas and equipment to be used for processing, sorting, and temporary storage of wastes.

e. Characterization, including estimated types and quantities, of the waste to be generated.

f. Actions that will be taken to divert at least 50% of the non-hazardous solid wastes (including waste from construction and demolition operations) from the waste stream. Report actual diversion rates during construction and demolition.

g. Name of landfill and/or incinerator to be used and the estimated costs for use, assuming that there would be no salvage or recycling on the project.

h. Identification of local and regional reuse programs, including non-profit organizations such as schools, local housing agencies, and organizations that accept used materials such as materials exchange networks and Habitat for Humanity. Include the name, location, and phone number for each reuse facility to be used, and provide a copy of the permit or license for each facility.

i. List of specific waste materials that will be salvaged for resale, salvaged and reused on the current project, salvaged and stored for reuse on a future project, or recycled. Recycling facilities that will be used shall be identified by name, location, and phone number, including a copy of the permit or license for each facility. Provide percentage of non-hazardous construction and demolition waste materials that have been diverted from the waste stream.

j. Identification of materials that cannot be recycled/reused with an explanation or justification, to be approved by the Contracting Officer.

k. Description of the means by which any waste materials identified in item (i) above will be protected from contamination.

k. Anticipated net cost savings determined by subtracting Contractor program management costs and the cost of disposal from the revenue generated by sale of the materials and the incineration and/or landfill cost avoidance.

l. Description of the means of transportation of the recyclable materials (whether materials will be site-separated and self-hauled to designated centers, or whether mixed materials will be collected by a waste hauler and removed from the site).

1.4 RECORDS

Records shall be maintained to document the quantity of waste generated; the quantity of waste diverted through sale, reuse, or recycling; and the quantity of waste disposed by landfill or incineration. Quantities may be measured by weight or by volume, but must be consistent throughout. List each type of waste separately noting the disposal or diversion date. Identify the landfill, recycling center, waste processor, or other organization used to process or receive the solid waste. Provide explanations for any waste not recycled or reused. With each application for payment, submit updated documentation for solid waste disposal and diversion, and submit manifests, weight tickets, receipts, and invoices specifically identifying the project and waste material. The records shall be made available to the Contracting Officer during construction, and a copy of the records shall be delivered to the Contracting Officer upon completion of the construction.

1.5 DISPOSAL

Except as otherwise specified in other sections of the specifications, disposal shall be in accordance with the following:

1.5.1 Reuse

First consideration shall be given to salvage for reuse since little or no re-processing is necessary for this method, and less pollution is created when items are reused in their original form. Sale or donation of waste suitable for reuse shall be considered. Salvaged materials, other than those specified in other sections to be salvaged and reinstalled, shall not be used in this project.

1.5.2 Recycle

Waste materials not suitable for reuse, but having value as being recyclable, shall be made available for recycling whenever economically feasible.

1.5.3 Waste

Materials with no practical use or economic benefit shall be disposed at a landfill or incinerator.

1.6 Additional Reporting and Recording Requirements

Provide monthly cost and revenue data to the NAVFAC Midlant Integrated Solid Waste Management office. The report shall be submitted by e-mail to:
IntegratedSolidWasteManagement@navy.mil
no later than the 3rd of each month. Data shall be reported on an excel document provided by the Contracting Officer. Comply with the requirements specified in Appendix 01 74 19-1, "Construction and Demolition Solid Waste Report".

PART 2 PRODUCTS

Not used.

PART 3 EXECUTION

Not used.

-- End of section --

CONSTRUCTION AND DEMOLITION SOLID WASTE REPORT

SITE: **Month:**

Contractor's Company Name: **Contract #**

Contractor's POC and Telephone or Email Address:

Project Description:

SECTION 1	Tons	Cost	Revenue	Remarks
Recycled (tons)				
Concrete(incl: brick & block)				
Wood				
Metal				
Asphalt				
Green waste(clearing debris)				
Dirt				
Sand				
Gravel/Rock				
Mixed				
Misc				
Subtotal - Recycled	**0.00**	**$ -**	**$ -**	
SECTION 2				
Landfilled (tons)				
Concrete(incl: brick & block)				
Wood				
Metal				
Asphalt				
Green Waste(clearing debris)				
General C&D				
Dirt				
Sand				
Gravel/Rock				
Mixed				
Misc				
Subtotal - Landfilled	**0.00**	**$ -**	**$ -**	
Solid Waste (tons)				
Total Solid Waste	**0.00**	**$ -**	**$ -**	

REPORTING DEADLINE IS NO LATER THAN THE 3RD OF EACH MONTH

SECTION 01 75 00

STARTING AND ADJUSTING
12/14

PART 1 GENERAL

1.1 SUMMARY

Requirements of this Section apply to, and are a component part of, each section of the specifications.

1.2 SUBMITTALS

Government approval is required for submittals with a "G" designation; submittals not having a "G" designation are for Contractor Quality Control approval. Submit the following in accordance with Section 01 33 00 SUBMITTAL PROCEDURES for Design-Bid-Build projects:

SD-01 Preconstruction Submittals

Verification of Prior Experience; G

Documentation of Manufacturer's Prior Experience; G

Quality Control Plan; G

Manufacturer's Sample Warranty; G

Operation and Maintenance Data; G

Provide Evidence; G

SD-02 Shop Drawings

Drawings, Diagrams and Schedules; G

Diagrams and Instructions; G

Coordination Drawings; G

SD-03 Product Data

Catalog Cuts; G

Samples of Warranty Language; G

SD-05 Design Data

Design Calculations; G

SD-06 Test Reports

Factory Tests; G

Functional Field Test; G

Final Acceptance Test,; G

Test Procedures; G

SD-07 Certificates

Qualification of Manufacturer; G

Qualification of Applicator or Installer; G

SD-08 Manufacturer's Instructions

Manufacturer's Administrative Requirements; G

Demonstration and Training Information; G

Manufacturer's Procedural Requirements; G

SD-09 Manufacturer's Field Reports

Documentation of the Testing and Verification Actions; G

SD-10 Operation and Maintenance Data

Operation and Maintenance Data; G

Safety and Security Data or Posters; G

1.2.1 Preconstruction and Pre-Testing Requirements

Deliver equipment and services to meet the requirements and specifications of their respective contract. Ensure all equipment is free of latent manufacturing and installation defects. The Government reserves the option to elect performance of acceptance testing by internal personnel, or a designated third party. Regardless of who performs the acceptance testing, ensure the requirements of acceptance are.

Submit the following for review and approval prior to the commencement of work and any testing, whether such testing is on site or elsewhere:

a. Verification of prior experience and expertise with similar project scope

b. Documentation of manufacturer's prior experience and expertise with similar project materials and systems

c. Quality control plan

d. Manufacturer's sample warranty and operation and maintenance data, with details regarding start-up procedures

e. Manufacturer's administrative requirements

f. Manufacturer's procedural requirements

g. Demonstration and training information

Submit the following certifications:

a. Provide evidence that products used within this specification are manufactured in the United States.

b. Qualification of manufacturer, including current licenses and insurance.

c. Qualification of Applicator or Installer, including licenses and insurance.

1.2.2 Shop Drawings and Diagrams

Submit the following shop drawings, record drawings, and diagrams as required to correctly execute the installation of the work:

a. Drawings, diagrams and schedules specifically prepared to illustrate portion of the work Contractor is responsible for.

b. Diagrams and instructions from a manufacturer or fabricator for use in producing the product and as aids to the Contractor for integrating the product or system into the project

c. Coordination drawings prepared by or for the Contractor to show how multiple systems and interdisciplinary work will be coordinated

1.2.3 Product and Design Data

Submit all product data and any design calculations, mix designs, analyses or other data pertaining to portion of the work, to ensure a complete functional installation; including, but not limited to:

a. Catalog cuts, illustrations, schedules, diagrams, performance charts, instructions and brochures illustrating size, physical appearance and other characteristics of materials, systems or equipment for some portion of the work

b. Samples of warranty language when the contract requires standard and no dollar limit product warranties

c. Operation and maintenance data provided by the manufacturer to ensure the safe and efficient operation, maintenance and repair of the system or equipment provided

d. Safety and security data or posters provided by the manufacturer to be posted in a conspicuous visible location for operational and maintenance personnel

1.2.4 Tests Required

Perform tests to verify proper functioning of fire protection, fire suppression, HVAC, compressed air, electrical switchgear, protective relaying, fluid and gas systems, pump/motor combinations, boiler systems, hydraulic and pneumatic control, condition/performance monitoring systems, energy control and monitoring systems, and other assemblies and components that need to be tested as an interrelated whole.

1.2.4.1 Factory Tests

Submit certified copies of required tests performed at the factory to verify proper build. These test results will be used in the "Final

Acceptance Test" section to verify no shipping damage and proper installation.

1.2.4.2 Functional Field Test

Perform functional field tests test to verify that the system and components have been properly installed and are functioning properly. Perform test(s) in the presence of the Contracting Officer. Acceptance will be issued when system has performed per other sections and referenced industry standards.

Coordinate and submit documentation of the testing and verification actions taken by manufacturer's representative at the job site, on a portion of the work, during or after installation, to confirm compliance with manufacturer's standards or instructions.

1.2.4.3 Final Acceptance Test

Perform a formal test with full documentation using the approved recording form. Contracting Officer will witness this test and issue a written final acceptance. Provide final test data to the Contracting Officer with a cover letter clearly marked with the system name, date, and the words " Final Test Data - Forward to the Systems Engineer/Condition Monitoring Office/Predictive Testing Group for inclusion in the Maintenance Database."

1.2.4.4 Test Procedures

Submit test procedure and recording forms that document the test steps for approval to the Contracting Officer 21 calendar days prior to the proposed test date. Ensure procedures clearly state step by step instruction to verify system parameters, components, and functions.

PART 2 PRODUCTS

Not used.

PART 3 EXECUTION

Not used.

-- End of Section --

SECTION 01 78 00.00 22

CLOSEOUT SUBMITTALS (PWD ME)
12/14

PART 1 GENERAL

This specification applies to all Design-Bid-Build and Design-Build projects.

1.1 REFERENCES

The publications listed below form a part of this specification to the extent referenced. The publications are referred to within the text by the basic designation only.

ASTM INTERNATIONAL (ASTM)

ASTM E 1971	(2005) Stewardship for the Cleaning of Commercial and Institutional Buildings

GREEN SEAL (GS)

GS-37	(2000; R 2005) Industrial and Institutional Cleaners

U.S. DEPARTMENT OF DEFENSE (DOD)

UFC 1-300-08	(2009, with Change 2) Criteria for Transfer and Acceptance of DoD Real Property

1.2 SUBMITTALS

Government approval is required for submittals with a "G" designation; submittals not having a "G" designation are for Contractor Quality Control approval. Submit the following in accordance with Section 01 33 00 SUBMITTAL PROCEDURES for Design-Bid-Build projects:

SD-03 Product Data

As-Built Record of Equipment and Materials; G

Two (2) paper copies and one pdf copy of the record listing the as-built materials and equipment incorporated into the construction of the project.

Warranty Management Plan; G

One paper and one pdf set of the warranty management plan containing information relevant to the warranty of materials and equipment incorporated into the construction project, including the starting date of warranty of construction. Furnish with each warranty the name, address, and telephone number of each of the guarantor's representatives nearest to the project location.

Warranty Tags; G

Two (2) paper record copies and one pdf copy of the warranty tags showing the layout and design.

Final Cleaning; G

Two (2) copies of the listing of completed final clean-up items.

Spare Parts Data; G

Two (2) paper copies and one pdf copy of the list that indicates manufacturer's name, part number, nomenclature, and stock level recommended for maintenance and repair. List those items that may be standard to the normal maintenance of the system.

SD-08 Manufacturer's Instructions

Preventative Maintenance; G and Condition Monitoring (Predictive Testing); G and Inspection; G schedules with instructions that state when systems should be retested.

Define within the schedule the anticipated length of each test, test apparatus, number of personnel identified by responsibility, and a testing validation procedure permitting the record operation capability requirements. On each test feature; e.g., gpm, rpm, psi, provide a signoff blank for the Contractor and Contracting Officer. Within a remarks column of the testing validation procedure include references to operating limits of time, pressure, temperature, volume, voltage, current, acceleration, velocity, alignment, calibration, adjustments, cleaning, or special system notes. Delineate procedures for preventative maintenance, condition monitoring (predictive testing) and inspection, adjustment, lubrication and cleaning necessary to prevent failure.

Posted Instructions; G

SD-10 Operation and Maintenance Data

Submit Operation and Maintenance Manuals; G in accordance with paragraph entitled, "Operation and Maintenance," of this section. Submit 2 paper copies, and one pdf copy on CD.

SD-11 Closeout Submittals

Record Drawings; G

Drawings showing final as-built conditions of the project. The final CADD record drawings must consist of one set of electronic CADD drawing files in the specified electronic format saved on a CD, one set of mylar drawings, 2 sets of blue-line prints of the mylars, and one set of the approved working Record drawings.

Certification of EPA Designated Items; G
Interim Form DD1354; G
Checklist for Form DD1354; G
NAVFAC Sustainable & Energy Data Record Card; G
Certification of EPA Designated Items; G
Red Zone Documents per Section 01 30 00; G

1.3 PROJECT RECORD DOCUMENTS

1.3.1 Record Drawings

This paragraph covers Record Drawings complete, as a requirement of the contract. The terms "drawings," "contract drawings," "drawing files," "working as-built record drawings," and "final record drawings" refer to contract drawings (hard copy and CADD) which are revised to be used for final record drawings reflecting current project as-built conditions.

1.3.1.1 Government Furnished Materials

One set of electronic CADD files in the specified software and format of the contract drawings will be provided by the Government at the preconstruction conference for projects requiring Final Record Drawings in CADD format.

1.3.1.2 Working Record and Final Record Drawings

Revise 2 sets of hard copy paper contract drawings by red-line process described herein to reflect the current as-built conditions during the prosecution of the project. The Contractor shall keep the working as-built drawings current and shall keep at least one set available on the jobsite for review at all times. Changes from the contract plans which are made in the work or additional information which might be uncovered in the course of construction must be accurately and neatly recorded as they occur by means of details and notes. After the completion of each definable feature of work as listed in the Contractor Quality Control Plan (Foundations, Utilities, Structural Steel, etc., as appropriate for the project) provide (1) set of working as-built drawings (CADD) in the specified software and format hard copy and electronic to the Contracting Officer. The working as-built drawings, hard copy and (CADD), will be jointly reviewed for accuracy, completeness and format by the Contracting Officer and the Contractor prior to submission of each monthly pay estimate. If the Contractor fails to maintain the working as-built drawings, hard copy and (CADD) as specified herein, the Contracting Officer will deduct from the monthly progress payment an amount representing the estimated cost of maintaining the record drawings. This monthly deduction will continue until an agreement can be reached between the Contracting Officer and the Contractor regarding the accuracy and completeness of updated drawings. Items to be shown on the working as-built drawings, hard copy and (CADD) are, but are not limited to, the following information:

a. The actual location (horizontal and vertical position based on Shipyard datums), kinds and sizes of all sub-surface utility lines. In order that the location of these lines and appurtenances may be determined in the event the surface openings or indicators become covered over or obscured, as a back-up to the horizontal and vertical position, feature shall also be shown by offset dimensions to two permanently fixed surface features the end of each run including each change in direction. Locate valves, splice boxes and similar appurtenances by dimensioning along the utility run from a reference point. Also record the average depth below the surface of each run of pipe, fittings, valves, etc.

b. The actual location (horizontal and vertical position based on Shipyard datums), kind and size of any sub-surface feature uncovered not accurately represented on the contract drawings.

c. The location and dimensions of any changes within the building structure.

e. Changes in details of design or additional information obtained from working drawings specified to be prepared and/or furnished by the Contractor; including, but not limited to, fabrication, erection, installation plans and placing details, pipe sizes, insulation material, dimensions of equipment foundations, etc.

g. Changes or modifications which result from the final inspection.

h. Where contract drawings or specifications present options, identify the option selected for construction on the working as-built prints.

j. Systems designed or enhanced by the Contractor, such as HVAC controls, fire alarm, fire sprinkler, and irrigation systems.

k. Modifications (include within change order price the cost to change working and final record drawings to reflect modifications) and compliance with the following procedures:

(1) Both sets of the hard copy paper contract working as-built drawings must be neat, legible and accurate. Any drawings damaged, lost or corrupted by the Contractor must be satisfactorily replaced by the Contractor at no expense to the Government.

(2) For text deletions/revisions; strikeout existing drawing text with a single line as to not obscure or make the original text unreadable. Place the new text adjacent, clearly annotating the intent of the change.

(3) For line work; strikeout entities with parallel lines drawn at 45 degrees to the object, not to obscure or make the original object unreadable. Place the new object in its correct location and clearly annotate the intent of the change.

(4) Place a Revision Symbol at the location of each modification on the drawing sheet along with descriptive annotations of the revision.

(5) For details, sections or schedules which are added to a drawing sheet, place a Revision Symbol by the detail, section or schedule title.

(6) For major changes to a drawing, place a Revision Symbol by the title of the affected plan, section, or detail at each location.

(7) For changes within schedules, place a Revision Symbol by the change in the schedule.

(8) The Revision Symbol shall be a Delta sized to allow for a capital

letter to fit within. The letter shall have a height of not less than 1/8-inch when plotted.

(9) The revision symbol letter shall be consistent for all drawing modifications for each monthly billing cycle. Drawing modifications for the first monthly bill cycle shall be designated as "A" for all modifications throughout the drawing package. The next month's revisions shall be designated as "B" throughout the drawing package, and so on.

1.3.1.3 Drawing Preparation

At project completion, provide 2 sets of the approved hard copy paper contract drawings modified to reflect the final as-built conditions of the project to the Contracting Officer. Modify the contract drawings as necessary to correctly show the features of the project as it has been constructed by bringing the contract drawings into agreement with the second set of approved working as-built drawings. The second set of approved working as-built drawings are also part of the permanent records of this project and must be returned to the Contracting Officer after final approval of the Record Drawings by the Government. Any drawings or drawing files damaged, lost or corrupted by the Contractor must be satisfactorily replaced by the Contractor at no expense to the Government.

1.3.1.4 Computer Aided Design and Drafting (CADD) Drawings

Only employ personnel proficient in the preparation of CADD drawings to modify the contract drawings or prepare any additional drawings sheets required. Modifications, to the Record Drawings must be equal in quality and detail to that of the original contract drawings. Line colors, line weights, lettering, layering conventions, and symbols shall remain consistent throughout the record drawing set, regardless of either as-built or record drawing. The contractor shall modify the original contract drawing files to reflect the construction contract as-built conditions reviewed and accepted by **the Contracting Officer.** Each as-built condition added to a drawing file shall be encapsulated by a closed polygon or "revision cloud. A revision symbol shall be placed outside the "revision cloud" with the appropriate letter designating the revision sequence. The contractor shall annotate in the "revision block" of each drawing file modified as to the type of revisions made to the drawing file. The contract drawings are to be edited to reflect the as-built conditions only. No part of the original drawings shall be deleted, erased or rendered illegible. Parts of the contract drawing found to be in error or modified during construction, shall be over struck using methods described not to obscure the original drawing, and annotations will be added adjacent that clearly explain the modification, including accurate dimensions locating the feature. If additional drawings are required, the drawings shall be prepared using the specified electronic file format applying, the same graphic standards specified for original drawings. The title block and drawing border to be used for any new final record drawings shall be identical to that used to create the contract drawings. Modifications, additions and corrections to the contract drawings shall be made to the electronic AutoCAD file(s). The Contractor shall be furnished with the original contract drawing files in the AutoCAD software format currently in use by PWD-ME. The electronic files shall be supplied on compact disc, (CD). The Contractor shall provide all computer software and hardware necessary to prepare final record drawing set. The Contracting Officer shall review final record drawing set for accuracy and return them to the Contractor for required

corrections, changes, additions, and deletions.

a. Provide Record Drawings (CADD) in the following format:

(1) As-built Layering; follow original drawing layer naming conventions followed by "-AB".

(2) Deletions (Cyan) - Over-strike deleted graphic items (lines), lettering in notes and leaders.

(3) Additions (Cyan) - Added items, lettering in notes and leaders.

(4) Special (Cyan) - Items requiring special information, coordination, or special detailing or detailing notes.

(5) The Contractor shall furnish the contract record drawing files in the AutoCAD software format currently in use by PWD-ME.

b. Drawing files modified for as-built condition shall be renamed by adding an underscore and the letters "AB" to the end of the existing file name. Drawing files where no modifications were required shall be renamed by adding an underscore and the letters "RD" to the end of the existing file name.

c. When final revisions have been completed to the record drawing set, add the wording "RECORD DRAWINGS / AS-BUILT CONDITIONS" followed by the name of the Contractor in letters at least 3/16 inch high in the lower left hand corner of the cover sheet drawing. Mark all other contract drawings in the same location and manner as either "Record Drawing" denoting no revisions on the sheet or "As built Drawing" denoting modifications, additions or corrections have been made to the drawing sheet. Modify the revision block to reflect either "record drawing", for no changes or "as built drawing", for changes and date for submittal.

d. Within 20 working days after Government approval of all of the working record drawings for a phase of work, prepare the CADD electronic files for that phase of work and submit for Government review and approval. The Government will promptly return one set of prints annotated with any necessary corrections. Within 10 working days revise the CADD files accordingly at no additional cost and submit one set of final prints for the completed phase of work to the Government.

e. Within 20 working days of substantial completion of all phases of work, submit the final record drawing package for the entire project. Submit one set of electronic files on compact disc, read-only memory (CD-ROM), one set of mylars and one set of the approved working record drawings. They must be complete in all details and identical in form and function to the contract drawing files supplied by the Government. Any transactions or adjustments necessary to accomplish this is the responsibility of the Contractor. The Government reserves the right to reject any drawing files it deems incompatible with the customer's CADD system. Paper prints, drawing files and storage media submitted will become the property of the Government upon final approval. Failure to submit final record drawing files and marked prints as specified will be cause for withholding any payment due the Contractor under this contract. Approval and acceptance of final record drawings must be accomplished before final payment is made to the Contractor.

1.3.2 As-Built Record of Equipment and Materials

Furnish one copy of preliminary record of equipment and materials used on the project 15 working days prior to final inspection. This preliminary submittal will be reviewed and returned 5 working days after final inspection with Government comments. Submit two sets of final record of equipment and materials 10 working days after final inspection. Key the designations to the related area depicted on the contract drawings. List the following data:

RECORD OF DESIGNATED EQUIPMENT AND MATERIALS DATA

Description	Specification Section	Manufacturer and Catalog, Model, and Serial Number	Composition and Size	Where Used

1.3.3 Final Approved Shop Drawings

Furnish final approved project shop drawings 30 calendar days after transfer of the completed facility.

1.3.4 Construction Contract Specifications

Furnish final record (as-built) construction contract specifications, including modifications thereto, 30 calendar days after transfer of the completed facility.

1.3.5 Real Property Equipment

Furnish a list of installed equipment furnished under this contract. Include all information usually listed on manufacturer's name plate. In the "EQUIPMENT-IN-PLACE LIST" include, as applicable, the following for each piece of equipment installed: description of item, location (by room number), model number, serial number, capacity, name and address of manufacturer, name and address of equipment supplier, condition, spare parts list, manufacturer's catalog, and warranty. Furnish a draft list at time of transfer. Furnish the final list 30 calendar days after transfer of the completed facility.

1.3.6 Red Zone Documents

Submit Red Zone Documents per Section 01 30 00 ADMINISTRATIVE REQUIREMENTS (PWD ME).

1.4 SPARE PARTS DATA

Indicate manufacturer's name, part number, nomenclature, and stock level required for maintenance and repair. List those items that may be standard to the normal maintenance of the system.

Supply 2 items of each part for spare parts inventory. Provision of spare parts does not relieve the Contractor of responsibilities listed under the contract guarantee provisions.

1.5 PREVENTATIVE MAINTENANCE

Submit Preventative Maintenance and Condition Monitoring (Predictive

Testing) and Inspection schedules with instructions that state when systems should be retested.

Define the anticipated length of each test, test apparatus, number of personnel identified by responsibility, and a testing validation procedure permitting the record operation capability requirements within the schedule. Provide a signoff blank for the Contractor and Contracting Officer for each test feature; e.g., gpm, rpm, psi. Include a remarks column for the testing validation procedure referencing operating limits of time, pressure, temperature, volume, voltage, current, acceleration, velocity, alignment, calibration, adjustments, cleaning, or special system notes. Delineate procedures for preventative maintenance, inspection, adjustment, lubrication and cleaning necessary to minimize corrective maintenance and repair.

Repair requirements must inform operators how to check out, troubleshoot, repair, and replace components of the system. Include electrical and mechanical schematics and diagrams and diagnostic techniques necessary to enable operation and troubleshooting of the system after acceptance.

1.6 CERTIFICATION OF EPA DESIGNATED ITEMS

Submit the Certification of EPA Designated Items as required by FAR 52.223-9, "Certification and Estimate of Percentage of Recovered Material Content for EPA Designated Items". Include on the certification form the following information: project name, project number, Contractor name, license number, Contractor address, and certification. The certification will read as follows and be signed and dated by the Contractor. "I hereby certify the information provided herein is accurate and that the requisition/procurement of all materials listed on this form comply with current EPA standards for recycled/recovered materials content. The following exemptions may apply to the non-procurement of recycled/recovered content materials:

1) The product does not meet appropriate performance standards;
2) The product is not available within a reasonable time frame;
3) The product is not available competitively (from two or more sources); and
4) The product is only available at an unreasonable price (compared with a comparable non-recycled content product)."

1.7 WARRANTY MANAGEMENT

1.7.1 Warranty Management Plan

Develop a warranty management plan which contains information relevant to the clause Warranty of Construction. At least 30 days before the planned pre-warranty conference, submit the warranty management plan for Government approval. Include within the warranty management plan all required actions and documents to assure that the Government receives all warranties to which it is entitled. The plan must be in narrative form and contain sufficient detail to render it suitable for use by future maintenance and repair personnel, whether tradesmen, or of engineering background, not necessarily familiar with this contract. The term "status" as indicated below must include due date and whether item has been submitted or was accomplished. Warranty information made available during the construction phase must be submitted to the Contracting Officer for approval prior to each monthly pay estimate. Assemble approved information in a binder and turn over to the Government upon acceptance of

the work. The construction warranty period will begin on the date of project acceptance and continue for the full product warranty period. A joint 4 month and 9 month warranty inspection will be conducted, measured from time of acceptance, by the Contractor, Contracting Officer and the Customer Representative. Include within the warranty management plan, but not limited to, the following:

a. Roles and responsibilities of all personnel associated with the warranty process, including points of contact and telephone numbers within the organizations of the Contractors, subContractors, manufacturers or suppliers involved.

b. Listing and status of delivery of all Certificates of Warranty for extended warranty items, to include roofs, HVAC balancing, pumps, motors, transformers, and for all commissioned systems such as fire protection and alarm systems, sprinkler systems, lightning protection systems, etc.

c. A list for each warranted equipment, item, feature of construction or system indicating:

    1. Name of item.
    2. Model and serial numbers.
    3. Location where installed.
    4. Name and phone numbers of manufacturers or suppliers.
    5. Names, addresses and telephone numbers of sources of spare parts.
    6. Warranties and terms of warranty. Include one-year overall warranty of construction. Items which have extended warranties must be indicated with separate warranty expiration dates.
    7. Cross-reference to warranty certificates as applicable.
    8. Starting point and duration of warranty period.
    9. Summary of maintenance procedures required to continue the warranty in force.
    10. Cross-reference to specific pertinent Operation and Maintenance manuals.
    11. Organization, names and phone numbers of persons to call for warranty service.
    12. Typical response time and repair time expected for various warranted equipment.

d. The Contractor's plans for attendance at the 4 and 9 month post-construction warranty inspections conducted by the Government.

e. Procedure and status of tagging of all equipment covered by extended warranties.

f. Copies of instructions to be posted near selected pieces of equipment where operation is critical for warranty and/or safety reasons.

1.7.2 Performance Bond

The Contractor's Performance Bond must remain effective throughout the construction period.

a. In the event the Contractor fails to commence and diligently pursue any construction warranty work required, the Contracting Officer will have the work performed by others, and after completion of the work, will charge the remaining construction warranty funds of expenses incurred by the Government while performing the work, including, but

not limited to administrative expenses.

b. In the event sufficient funds are not available to cover the construction warranty work performed by the Government at the Contractor's expense, the Contracting Officer will have the right to recoup expenses from the bonding company.

c. Following oral or written notification of required construction warranty repair work, respond in a timely manner. Written verification will follow oral instructions. Failure of the Contractor to respond will be cause for the Contracting Officer to proceed against the Contractor.

1.7.3 Pre-Warranty Conference

Prior to contract completion, and at a time designated by the Contracting Officer, meet with the Contracting Officer to develop a mutual understanding with respect to the requirements of this section. Communication procedures for Contractor notification of construction warranty defects, priorities with respect to the type of defect, reasonable time required for Contractor response, and other details deemed necessary by the Contracting Officer for the execution of the construction warranty will be established/reviewed at this meeting. In connection with these requirements and at the time of the Contractor's quality control completion inspection, furnish the name, telephone number and address of a licensed and bonded company which is authorized to initiate and pursue construction warranty work action on behalf of the Contractor. This point of contact will be located within the local service area of the warranted construction, be continuously available, and be responsive to Government inquiry on warranty work action and status. This requirement does not relieve the Contractor of any of its responsibilities in connection with other portions of this provision.

1.7.4 Warranty Tags

At the time of installation, tag each warranted item with a durable, oil and water resistant tag approved by the Contracting Officer. Attached each tag with a copper wire and spray with a silicone waterproof coating. The date of acceptance and the QC signature must remain blank until the project is accepted for beneficial occupancy. Show the following information on the tag.

a. Type of product/material_____.

b. Model number_____.

c. Serial number_____.

d. Contract number_____.

e. Warranty period_____from_____to_____.

f. Inspector's signature_____.

g. Construction Contractor_____.

Address_____.

Telephone number_____.

h. Warranty contact_____.

Address_____.

Telephone number_____.

i. Warranty response time priority code_____.

j. WARNING - PROJECT PERSONNEL TO PERFORM ONLY OPERATIONAL MAINTENANCE DURING THE WARRANTY PERIOD.

1.8 COMMISSIONING

1.8.1 Building Commissioning

All contract requirements for building commissioning shall be completed prior to contract completion.

1.8.2 HVAC Commissioning

All contract requirements of Section 23 05 93 TESTING, ADJUSTING, AND BALANCING FOR HVAC must be fully completed, including testing and inspection, prior to HVAC commissioning, except as noted otherwise in Section 23 05 93 TESTING, ADJUSTING, AND BALANCING FOR HVAC. All contract requirements of Section must be fully completed, including all testing, prior to HVAC commissioning. The time required to complete all work and testing as prescribed by Section 23 05 93 is included in the allotted calendar days for completion.

1.9 OPERATION AND MAINTENANCE MANUALS

Submit 6 copies of the project operation and maintenance manuals 30 calendar days prior to testing the system involved. Update and resubmit data for final approval no later than 30 calendar days prior to contract completion.

1.9.1 Configuration

Operation and Maintenance Manuals must be consistent with the manufacturer's standard brochures, schematics, printed instructions, general operating procedures, and safety precautions. Bind information in manual format and grouped by technical sections. Test data must be legible and of good quality. Light-sensitive reproduction techniques are acceptable provided finished pages are clear, legible, and not subject to fading. Pages for vendor data and manuals must have 0.3937-inch holes and be bound in 3-ring, loose-leaf binders. Organize data by separate index and tabbed sheets, in a loose-leaf binder. Binder must lie flat with printed sheets that are easy to read. Caution and warning indications must be clearly labeled.

1.9.2 Training and Instruction

Submit classroom and field instructions in the operation and maintenance of systems equipment where required by the technical provisions. These services must be directed by the Contractor, using the manufacturer's factory-trained personnel or qualified representatives. Contracting Officer will be given 7 calendar days written notice of scheduled instructional services. Instructional materials belonging to the manufacturer or vendor, such as lists, static exhibits, and visual aids,

must be made available to the Contracting Officer.

1.10 CLEANUP

Provide final cleaning in accordance with ASTM E 1971 and submit two copies of the listing of completed final clean-up items. Leave premises "broom clean." Comply with GS-37 for general purpose cleaning and bathroom cleaning. Use only nonhazardous cleaning materials, including natural cleaning materials, in the final cleanup. Clean interior and exterior glass surfaces exposed to view; remove temporary labels, stains and foreign substances; polish transparent and glossy surfaces; vacuum carpeted and soft surfaces. Clean equipment and fixtures to a sanitary condition. Replace filters of operating equipment and comply with the Indoor Air Quality (IAQ) Management Plan. Clean debris from roofs, gutters, downspouts and drainage systems. Sweep paved areas and rake clean landscaped areas. Remove waste and surplus materials, rubbish and construction facilities from the site. Recycle, salvage, and return construction and demolition waste from project in accordance with the Waste Management Plan. Promptly and legally transport and dispose of any trash. Do not burn, bury, or otherwise dispose of trash on the project site.

1.11 REAL PROPERTY RECORD

Near the completion of Project, but a minimum of 60 days prior to final acceptance of the work, complete, update draft DD Form 1354 attached to this section, and submit an accounting of all installed property with Interim Form DD1354 "Transfer and Acceptance of Military Real Property." Include any additional assets/improvements/alterations from the Draft DD Form 1354. Contact the Contracting Officer for any project specific information necessary to complete the DD Form 1354. Refer to UFC 1-300-08 for instruction on completing the DD Form 1354. For information purposes, a blank DD Form 1354 (fill-able) in ADOBE (PDF) may be obtained at the following web site:
http://www.dtic.mil/whs/directives/infomgt/forms/eforms/dd1354.pdf

Submit the completed Checklist for Form DD1354 of Installed Building Equipment items. Attach this list to the updated DD Form 1354.

1.12 NAVFAC SUSTAINABLE & ENERGY DATA RECORD CARD

Within 60 days of the completion of Project, complete an electronic copy of the NAVFAC Sustainable & Energy Data Record Card, and submit to the Contracting Officer. Draft Record card for this project should be available from Designer of Record (DOR) or Contracting Officer. Instructions and a blank DD Form (fill-able) in ADOBE (PDF) may be obtained at the Whole Building Design Guide web site by navigating: Home > Participating Agencies > Department of Defense (DoD) > NAVFAC Sustainable Development Program > Contract Documents > NAVFAC Sustainable & Energy Data Record Card; or directly at http://www.wbdg.org/pdfs/navfac_sustainable_energy_data_record_card.pdf.

PART 2 PRODUCTS

Not used.

PART 3 EXECUTION

Not used.

-- End of Section --

SECTION 01 78 23

OPERATION AND MAINTENANCE DATA
07/06

PART 1 GENERAL

1.1 REFERENCES

The publications listed below form a part of this specification to the extent referenced. The publications are referred to within the text by the basic designation only.

ASTM INTERNATIONAL (ASTM)

ASTM E1971	(2005; R 2011) Stewardship for the Cleaning of Commercial and Institutional Buildings

1.2 SUBMISSION OF OPERATION AND MAINTENANCE DATA

Submit Operation and Maintenance (O&M) Data specifically applicable to this contract and a complete and concise depiction of the provided equipment, product, or system, stressing and enhancing the importance of system interactions, troubleshooting, and long-term preventative maintenance and operation. The subcontractors must compile and prepare data and deliver to the Contractor prior to the training of Government personnel. The Contractor must compile and prepare aggregate O&M data including clarifying and updating the original sequences of operation to as-built conditions. Organize and present information in sufficient detail to clearly explain O&M requirements at the system, equipment, component, and subassembly level. Include an index preceding each submittal. Submit in accordance with this section and Section 01 33 00 SUBMITTAL PROCEDURES.

1.2.1 Package Quality

Documents must be fully legible. Poor quality copies and material with hole punches obliterating the text or drawings will not be accepted.

1.2.2 Package Content

Data package content shall be as shown in the paragraph titled "Schedule of Operation and Maintenance Data Packages." Comply with the data package requirements specified in the individual technical sections, including the content of the packages and addressing each product, component, and system designated for data package submission, except as follows. Commissioned items without a specified data package requirement in the individual technical sections must use Data Package 3. Commissioned items with a Data Package 1 or 2 requirement must use instead Data Package 3.

1.2.3 Changes to Submittals

Manufacturer-originated changes or revisions to submitted data must be furnished by the Contractor if a component of an item is so affected subsequent to acceptance of the O&M Data. Submit changes, additions, or revisions required by the Contracting Officer for final acceptance of submitted data within 30 calendar days of the notification of this change

requirement.

1.2.4 Review and Approval

The Government's Commissioning Authority (CA) must review the commissioned systems and equipment submittals for completeness and applicability. The Government must verify that the systems and equipment provided meet the requirements of the Contract documents and design intent, particularly as they relate to functionality, energy performance, water performance, maintainability, sustainability, system cost, indoor environmental quality, and local environmental impacts. The CA must communicate deficiencies to the Contracting Officer. Upon a successful review of the corrections, the CA must recommend approval and acceptance of these O&M manuals to the Contracting Officer. This work is in addition to the normal review procedures for O&M data.

1.2.5 O&M Database

Develop a database from the O&M manuals that contains the information required to start a preventative maintenance program.

1.3 TYPES OF INFORMATION REQUIRED IN O&M DATA PACKAGES

1.3.1 Operating Instructions

Include specific instructions, procedures, and illustrations for the following phases of operation for the installed model and features of each system:

1.3.1.1 Safety Precautions

List personnel hazards and equipment or product safety precautions for all operating conditions.

1.3.1.2 Operator Prestart

Include procedures required to install, set up, and prepare each system for use.

1.3.1.3 Startup, Shutdown, and Post-Shutdown Procedures

Provide narrative description for Startup, Shutdown and Post-shutdown operating procedures including the control sequence for each procedure.

1.3.1.4 Normal Operations

Provide narrative description of Normal Operating Procedures. Include Control Diagrams with data to explain operation and control of systems and specific equipment.

1.3.1.5 Emergency Operations

Include Emergency Procedures for equipment malfunctions to permit a short period of continued operation or to shut down the equipment to prevent further damage to systems and equipment. Include Emergency Shutdown Instructions for fire, explosion, spills, or other foreseeable contingencies. Provide guidance and procedures for emergency operation of all utility systems including required valve positions, valve locations and zones or portions of systems controlled.

1.3.1.6 Operator Service Requirements

Include instructions for services to be performed by the operator such as lubrication, adjustment, inspection, and recording gage readings.

1.3.1.7 Environmental Conditions

Include a list of Environmental Conditions (temperature, humidity, and other relevant data) that are best suited for the operation of each product, component or system. Describe conditions under which the item equipment should not be allowed to run.

1.3.2 Preventive Maintenance

Include the following information for preventive and scheduled maintenance to minimize corrective maintenance and repair for the installed model and features of each system. Include potential environmental and indoor air quality impacts of recommended maintenance procedures and materials.

1.3.2.1 Lubrication Data

Include preventative maintenance lubrication data, in addition to instructions for lubrication provided under paragraph titled "Operator Service Requirements":

a. A table showing recommended lubricants for specific temperature ranges and applications.

b. Charts with a schematic diagram of the equipment showing lubrication points, recommended types and grades of lubricants, and capacities.

c. A Lubrication Schedule showing service interval frequency.

1.3.2.2 Preventive Maintenance Plan and Schedule

Include manufacturer's schedule for routine preventive maintenance, inspections, tests and adjustments required to ensure proper and economical operation and to minimize corrective maintenance. Provide manufacturer's projection of preventive maintenance work-hours on a daily, weekly, monthly, and annual basis including craft requirements by type of craft. For periodic calibrations, provide manufacturer's specified frequency and procedures for each separate operation.

1.3.2.3 Cleaning Recommendations

Provide environmentally preferable cleaning recommendations in accordance with ASTM E1971.

1.3.3 Corrective Maintenance (Repair)

Include manufacturer's recommended procedures and instructions for correcting problems and making repairs for the installed model and features of each system. Include potential environmental and indoor air quality impacts of recommended maintenance procedures and materials.

1.3.3.1 Troubleshooting Guides and Diagnostic Techniques

Include step-by-step procedures to promptly isolate the cause of typical

malfunctions. Describe clearly why the checkout is performed and what conditions are to be sought. Identify tests or inspections and test equipment required to determine whether parts and equipment may be reused or require replacement.

1.3.3.2 Wiring Diagrams and Control Diagrams

Wiring diagrams and control diagrams shall be point-to-point drawings of wiring and control circuits including factory-field interfaces. Provide a complete and accurate depiction of the actual job specific wiring and control work. On diagrams, number electrical and electronic wiring and pneumatic control tubing and the terminals for each type, identically to actual installation configuration and numbering.

1.3.3.3 Maintenance and Repair Procedures

Include instructions and a list of tools required to repair or restore the product or equipment to proper condition or operating standards.

1.3.3.4 Removal and Replacement Instructions

Include step-by-step procedures and a list required tools and supplies for removal, replacement, disassembly, and assembly of components, assemblies, subassemblies, accessories, and attachments. Provide tolerances, dimensions, settings and adjustments required. Instructions shall include a combination of text and illustrations.

1.3.3.5 Spare Parts and Supply Lists

Include lists of spare parts and supplies required for maintenance and repair to ensure continued service or operation without unreasonable delays. Special consideration is required for facilities at remote locations. List spare parts and supplies that have a long lead-time to obtain.

1.3.4 Corrective Maintenance Work-Hours

Include manufacturer's projection of corrective maintenance work-hours including requirements by type of craft. Corrective maintenance that requires completion or participation of the equipment manufacturer shall be identified and tabulated separately.

1.3.5 Appendices

Provide information required below and information not specified in the preceding paragraphs but pertinent to the maintenance or operation of the product or equipment. Include the following:

1.3.5.1 Product Submittal Data

Provide a copy of all SD-03 Product Data submittals required in the applicable technical sections.

1.3.5.2 Manufacturer's Instructions

Provide a copy of all SD-08 Manufacturer's Instructions submittals required in the applicable technical sections.

1.3.5.3 O&M Submittal Data

Provide a copy of all SD-10 Operation and Maintenance Data submittals required in the applicable technical sections.

1.3.5.4 Parts Identification

Provide identification and coverage for all parts of each component, assembly, subassembly, and accessory of the end items subject to replacement. Include special hardware requirements, such as requirement to use high-strength bolts and nuts. Identify parts by make, model, serial number, and source of supply to allow reordering without further identification. Provide clear and legible illustrations, drawings, and exploded views to enable easy identification of the items. When illustrations omit the part numbers and description, both the illustrations and separate listing shall show the index, reference, or key number that will cross-reference the illustrated part to the listed part. Parts shown in the listings shall be grouped by components, assemblies, and subassemblies in accordance with the manufacturer's standard practice. Parts data may cover more than one model or series of equipment, components, assemblies, subassemblies, attachments, or accessories, such as typically shown in a master parts catalog

1.3.5.5 Warranty Information

List and explain the various warranties and clearly identify the servicing and technical precautions prescribed by the manufacturers or contract documents in order to keep warranties in force. Include warranty information for primary components such as the compressor of air conditioning system.

1.3.5.6 Personnel Training Requirements

Provide information available from the manufacturers that is needed for use in training designated personnel to properly operate and maintain the equipment and systems.

1.3.5.7 Testing Equipment and Special Tool Information

Include information on test equipment required to perform specified tests and on special tools needed for the operation, maintenance, and repair of components.

1.3.5.8 Testing and Performance Data

Include completed prefunctional checklists, functional performance test forms, and monitoring reports. Include recommended schedule for retesting and blank test forms.

1.3.5.9 Contractor Information

Provide a list that includes the name, address, and telephone number of the General Contractor and each Subcontractor who installed the product or equipment, or system. For each item, also provide the name address and telephone number of the manufacturer's representative and service organization that can provide replacements most convenient to the project site. Provide the name, address, and telephone number of the product, equipment, and system manufacturers.

1.4 TYPES OF INFORMATION REQUIRED IN CONTROLS O&M DATA PACKAGES

Include Data Package 5 and the following for control systems:

a. Narrative description on how to perform and apply all functions, features, modes, and other operations, including unoccupied operation, seasonal changeover, manual operation, and alarms. Include detailed technical manual for programming and customizing control loops and algorithms.

b. Full as-built sequence of operations.

c. Copies of all checkout tests and calibrations performed by the Contractor (not Cx tests).

e. Full print out of all schedules and set points after testing and acceptance of the system.

f. Full as-built print out of software program.

g. Electronic File:

(1) Assemble each manual into a composite electronically indexed file in PDF format. Provide HDD’s, DVD's or CD's as appropriate, so that each one contains all maintenance and record files, and also the Project Record Documents and Training Videos, of the entire program for this facility.

(2) Name each indexed document file in composite electronic index with applicable item name. Include a complete electronically linked operation and maintenance directory.

(3) Link the index to separate files within the composite of files. Book mark maintenance and record files, that have a Table of Contents, according to the Table of Contents

h. Marking of all system sensors and thermostats on the as-built floor plan and mechanical drawings with their control system designations.

1.5 SCHEDULE OF OPERATION AND MAINTENANCE DATA PACKAGES

Furnish the O&M data packages specified in individual technical sections. The required information for each O&M data package is as follows:

1.5.1 Data Package 1

a. Safety precautions

b. Cleaning recommendations

c. Maintenance and repair procedures

d. Warranty information

e. Contractor information

f. Spare parts and supply list

1.5.2 Data Package 2

a. Safety precautions

b. Normal operations

c. Environmental conditions

d. Lubrication data

e. Preventive maintenance plan and schedule

f. Cleaning recommendations

g. Maintenance and repair procedures

h. Removal and replacement instructions

i. Spare parts and supply list

j. Parts identification

k. Warranty information

l. Contractor information

1.5.3 Data Package 3

a. Safety precautions

b. Operator prestart

c. Startup, shutdown, and post-shutdown procedures

d. Normal operations

e. Emergency operations

f. Environmental conditions

g. Lubrication data

h. Preventive maintenance plan and schedule

i. Cleaning recommendations

j. Troubleshooting guides and diagnostic techniques

k. Wiring diagrams and control diagrams

l. Maintenance and repair procedures

m. Removal and replacement instructions

n. Spare parts and supply list

o. Product submittal data

p. O&M submittal data

q. Parts identification

r. Warranty information

s. Testing equipment and special tool information

t. Testing and performance data

u. Contractor information

1.5.4 Data Package 4

a. Safety precautions

b. Operator prestart

c. Startup, shutdown, and post-shutdown procedures

d. Normal operations

e. Emergency operations

f. Operator service requirements

g. Environmental conditions

h. Lubrication data

i. Preventive maintenance plan and schedule

j. Cleaning recommendations

k. Troubleshooting guides and diagnostic techniques

l. Wiring diagrams and control diagrams

m. Maintenance and repair procedures

n. Removal and replacement instructions

o. Spare parts and supply list

p. Corrective maintenance man-hours

q. Product submittal data

r. O&M submittal data

s. Parts identification

t. Warranty information

u. Personnel training requirements

v. Testing equipment and special tool information

w. Testing and performance data

x. Contractor information

1.5.5 Data Package 5

a. Safety precautions

b. Operator prestart

c. Start-up, shutdown, and post-shutdown procedures

d. Normal operations

e. Environmental conditions

f. Preventive maintenance plan and schedule

g. Troubleshooting guides and diagnostic techniques

h. Wiring and control diagrams

i. Maintenance and repair procedures

j. Removal and replacement instructions

k. Spare parts and supply list

l. Product submittal data

m. Manufacturer's instructions

n. O&M submittal data

o. Parts identification

p. Testing equipment and special tool information

q. Warranty information

r. Testing and performance data

s. Contractor information

PART 2 PRODUCTS

Not Used

PART 3 EXECUTION

Not Used

-- End of Section --

SECTION 01 78 24.00 20

FACILITY ELECTRONIC OPERATION AND MAINTENANCE SUPPORT INFORMATION (eOMSI)
12/14

PART 1 GENERAL

This section applies to both Design-Bid-Build and Design-Build projects.

1.1 DEFINITIONS AND ABBREVIATIONS

1.1.1 Systems

The words "system", "systems", and "equipment", when used in this document refer to as-built systems and equipment.

1.1.2 Computer Assisted Design and Drafting (CADD)

Electronic Computer Assisted Design and Drafting graphic software program that is used to create facility design contract documents and Record Drawings.

1.1.3 KTR

An abbreviation for "Contractor."

1.2 EOMSI MEETINGS

Provide, organize, coordinate, and facilitate the meetings necessary to obtain the information to complete the eOMSI Manual and eOMSI Facility Data Workbook.

1.2.1 Pre-Construction Meeting

Discuss the following in this meeting:

a. eOMSI Manual and eOMSI Facility Data Workbook Development Meetings

b. Processes and methods of gathering eOMSI Manual and eOMSI Facility Data Workbook information during construction.

c. The eOMSI Submittals schedule. Place the eOMSI submittal schedule on the construction schedule.

d. Provision of electronic version of electronic eOMSI Facility Data Workbook file for Contractor's use and completion.

1.2.2 eOMSI Manual and Facility Data Workbook Development Meetings

Meet with key personnel to discuss the eOMSI Manual and Facility DataWorkbook requirements, and the deliverables. Lead a series of meetings that begin after the Pre-Construction Meeting and conclude with the Contractor's final eOMSI Manual and Facility Data Workbook submittal. Include the Contractor's eOMSI Manual and Facility Data Workbook Preparer, and Quality Control Manager, the Commissioning Authority (CA), and the Government's Design Manager (DM), Construction Manager (CM), and NAVFAC Public Works (PW) Facilities Management Specialist (FMS), to attend these meetings. Also include the Mechanical, Electrical, and Fire Protection

Sub-Contractors as required. As a minimum, perform the following tasks at these meetings:

a. Familiarize the Contractor with the eOMSI Facility Data Workbook.

b. Coordinate the Facility Operational and Maintenance training requirements.

c. Review progress of eOMSI Manual and eOMSI Facility Data Workbook development, and discuss issues that need to be resolved.

d. Review the electronic format of the eOMSI Manual and eOMSI Facility Data Workbook.

1.2.3 Field Validation Meetings of eOMSI Manual and eOMSI Facility Data Workbook

Field validate the accuracy of the eOMSI Manual and eOMSI Facility Data Workbook submittal in accordance with paragraph FIELD VALIDATION. Include the following personnel in this validation: Contractor's eOMSI Manual and Facility Data Workbook Preparer, Superintendent, Quality Control Manager, and Commissioning Authority (CA). Include the Sub-Contractors as required to verify as-built conditions. Coordinate Field Validation with the Contracting Officer to avoid conflict with Contract Schedule.

Perform the validation, document the results of the field validation, and correct the eOMSI, Final Submittal to reflect the changes identified.

1.2.4 Facility Turnover Meeting

Refer to paragraph FACILITY TURNOVER PLANNING MEETINGS (NAVFAC Red Zone - NRZ) in Section 01 30 00 ADMINISTRATIVE REQUIREMENTS (PWD ME), for eOMSI facility turnover meeting requirements.

1.3 SUBMITTAL SCHEDULING

1.3.1 eOMSI, Preliminary Submittal

Submit the Preliminary submittal when construction is approximately 50 percent complete. Provide eOMSI Manual Files (Bookmarked PDF) and eOMSI Facility Data Workbook (Excel).

Include all elements and portions of system construction completed up to this point. Provide one electronic copies to the Contracting Officer for approval.

1.3.2 eOMSI, Prefinal Submittal

Submit one electronically formatted copies of the 100 percent submittal of the eOMSI Prefinal Submittal to the Contracting Officer for approval. The eOMSI, Prefinal Submittal is due 60 calendar days prior to Beneficial Occupancy Date (BOD). This submittal must provide a complete, working document that can be used to operate and maintain the facility. Any portion of the submittal that is incomplete or inaccurate requires the entire submittal to be returned for correction. Ensure all Government requested changes from the Preliminary submittal are incorporated into the Prefinal submission.

Submit the Prefinal submittal when construction is approximately 90

percent complete. Provide eOMSI Manual Files (Bookmarked PDF) and eOMSI Facility Data Workbook (Excel).

1.3.3 eOMSI, Final Submittal

Provide completed eOMSI Manual Files (Bookmarked PDF) and eOMSI Facility Data Workbook (Excel). The Final submittal is due at BOD. Ensure all Government requested changes from the Prefinal submittal are incorporated into the Final submission.

1.4 UNITS OF MEASURE

Provide eOMSI utilizing the units of measure used in the Government created contract documents.

1.5 SUBMITTALS

Government approval is required for submittals with a "G" designation; submittals not having a "G" designation
are for Contractor Quality Control approval. Submit the following in accordance with Section 01 33 00 SUBMITTAL
PROCEDURES for Design-Bid-Build projects:

SD-10 Operation and Maintenance Data

Training Plan; G

Training Outline; G

Training Content; G

SD-11 Closeout Submittals

eOMSI, Preliminary Submittal; G

eOMSI, Prefinal Submittal; G

eOMSI, Final Submittal; G

Training Video Recording; G

Validation of Training Completion; G

PART 2 PRODUCTS

2.1 eOMSI FILES FORMAT

Scan eOMSI Manual Files and eOMSI Facility Data Workbook for malicious viruses using a commercially available scanning program that is routinely updated to identify and remove current virus threats.

Provide one electronic copies to the Contracting Officer for approval. Provide eOMSI Manual files on CD or data DVD disks using the most current version of Adobe Acrobat or similar software capable of producing PDF files. Provide eOMSI Facility Data Workbook on compact disks (CD) or data digital versatile disk (DVD) disks in (EXCEL) format.

2.1.1 eOMSI Manual Organization

Organize the eOMSI Manuals into three parts: 1) Product and Drawing Information, 2) Facility Information, and 3) Primary Systems. Bookmark the PDF files for easy access to the information.

a. Bookmark Facility Information and Primary Systems to at least one level lower than the major system.

b. Bookmark Product and Drawing Information documents using the current version of CSI Masterformat numbering system, and arrange submittals using the specification sections as a structure. Use CSI Masterformat and UFGS numbers along with descriptive bookmarking titles that explain the content of the information that is being bookmarked.

2.1.2 eOMSI Manual Compact Disk Label and Disk Holder or Case

Provide the following information on the compact disk label and disk holder or case:

a. Building Number

b. Project Title

c. Activity and Location

d. Construction Contract Number

e. Prepared For: (Contracting Agency)

f. Prepared By: (Name, title, phone number and email address)

g. Include the compact disk content on the disk label

h. Date

i. Virus scanning program used

2.2 EOMSI MANUAL

2.2.1 Product and Drawing Information

Provide an organized record of the facility products, materials, equipment, and minimum information necessary to operate the facility. Provide Product and Drawing Information for all systems in the final constructed facility, including the anticipated critical systems identified in this specification section. Organize and bookmark the information for easy access and quick retrieval.

2.2.1.1 O&M Data

As a minimum, include the O&M Data, submitted under SD-10 Data Packages in the technical specification sections, and in accordance with Section 01 78 23 OPERATION AND MAINTENANCE DATA. Provide the following for each product, material, and system on the project:

a. Materials

b. Equipment

c. Data Sheets

d. Test Reports

e. Warranties

f. Certificates

g. Shop Drawings

2.2.1.2 Shop Drawings

Provide and edit original CADD drawings, or original facility design drawings, to eliminate unneeded information; annotate and highlight the eOMSI information. Provide in source file and PDF format. Provide the following drawings at a large enough scale to be clear, legible, and able to differentiate designated isolation units from surrounding valves and switches.

a. Utility Schematic Diagrams - Provide a one line schematic diagram for each utility system such as power, water, wastewater, and gas/fuel. Schematic diagram must show from the point where the utility line is connected to the mainline up to the five-foot connection point to the facility. Indicate location or area designation for route of transmission or distribution lines; locations of duct banks, manholes/ handholes or poles; isolation units such as valves and switches; and utility facilities such as pump stations, lift stations, and substations.

b. Enlarged Connection and Cutoff Plans - Provide enlarged floor plans that provide information between the five foot utility connection point and where utilities connect to facility distribution. Enlarge floor plans / elevations of the rooms where the utility enters the building and indicate on these plans locations of the main interior and exterior connection and cutoff points for all utilities. Also enlarge floor plans / elevations of the rooms where equipment is located. Include enough information to enable someone unfamiliar with the facility to locate the connection and cutoff points. Indicate designations such as room number, panel number, circuit breaker, or valve number, of each utility and equipment connection and cutoff point, and what that connection and cutoff point controls.

2.2.1.3 Record Drawings

Provide an electronic copy of the Record Drawings for the project in source format and PDF format, bookmarking all drawings using the sheet title and sheet number.

2.2.2 Facility Information

Provide the following in Facility Information:

2.2.2.1 General Facility and System Description

Describe the function of the facility. Detail the overall dimensions of the facility, number of floors, foundation type, expected number of occupants, and facility Category Code. List and generally describe all the facility systems listed in the Primary Systems Information and any

special building features (for example, HVAC Controls, Sprinkler Systems, cranes, elevators, and generators). Include photographs marked up and labeled to show key operating components and the overall facility appearance.

2.2.2.2 Safety Hazards

List all residual hazards identified in the Activity Hazard Analysis as prepared by the DOR. Provide recommended safeguards for each identified hazard.

2.2.2.3 Floor Plans

Provide uncluttered, legible 11 by 17 inches floor plans. Include room numbers, type or function of spaces, and overall facility dimensions on the floor plans. Do not include items such as construction instructions, references, or frame numbers.

2.2.2.4 Floor Coverings, Wall Surfaces, and Ceiling Surfaces

Provide a table that lists by room number (including hallways and common spaces), the type, and area of finish. Include a facility summary of the total area for each type of space and floor, wall, or ceiling finish in the table.

2.2.2.5 Windows

Provide a table that lists by room number (including hallways and common spaces), the type of window, window size, number of each size and type, and special features. The table will include a facility summary of the total number for each type and size of window.

2.2.2.6 Roofing

Provide the total area of each type of roof surface and system. Provide the name of the roofing product and system; manufacturer's, supplier's, and installer's names, addresses, and phone numbers. For each type of roof, provide a recommended inspection, maintenance and repair schedule that details checkpoints, frequencies, and prohibited practices. List roof structural load limits.

2.2.2.7 HVAC Filters

Provide a table that lists the quantity, type, size, and location of each HVAC filter.

2.2.2.8 Plumbing Fixtures

Provide a table that lists by room number, the number and type of plumbing and bathroom plumbing fixtures (for example, sinks, water closets, urinals, showers and drinking fountains).

2.2.2.9 Lighting Fixtures

Provide a table that lists by room number (including hallways and common spaces), the type of lighting fixture, number of lighting fixtures, type of bulbs or tubes, and number of bulbs and tubes. The table must include a facility summary of the total number of fixtures of each type and number of bulbs or tubes of each type.

2.2.2.10 Equipment Listing

Provide a table that lists the major equipment shown on the design equipment schedules. Show the item descriptions, locations, model numbers; and the names, addresses, and telephone numbers of the manufacturers, suppliers, contractors, and subcontractors.

2.2.2.11 Supply Inventory Requirements

Provide a list of maintenance and repair supplies (e.g., spare parts, fuels and lubricants) required to ensure continued operation without unreasonable delays. Identify and list parts and supplies that have long purchase lead times. Give special consideration to facilities at remote locations.

2.2.2.12 Extended Warranty Information

List all warranties for products, equipment, components, and sub-components whose duration exceeds one year. Cross reference the list to the warranty copies provided in paragraph FACILITY INFORMATION or with the PRIMARY SYSTEMS. For each warranty listed, indicate the applicable specification section, duration, start date, end date, and the point of contact for warranty fulfillment. Also, list or reference all specific operation and maintenance procedures that must be performed to keep the warranty valid.

2.2.3 Primary Systems

The project is anticipated to include the following primary systems. Provide training and Operation and Maintenance data for all products,materials, and equipment that make up these systems in the final constructed facility.

a. HVAC facility systems (including chillers, boilers, heat pumps, air handling equipment, exhaust fans, fan coil units, VAV boxes, heart recovery wheels, hot and chilled water hydronic systems, control valves, and backflow preventers)

b. Direct Digital Controls/Space Temperature Controls.

d. Electrical systems (including transformers, diesel electric generator sets, automatic transfer switches, primary switchgear, secondary switchgear, high voltage switches, variable frequency drives, and frequency converters).

2.2.3.1 Primary Systems Information

Primary Systems Information requires using a systems approach. This approach requires that consideration be given to the entire system (that is, the interfaces of equipment, connections and material flow within the system). Use Notes, Cautions and Warnings throughout the Primary Systems Information to emphasize important and critical instructions and procedures. Provide the following information for each system:

a. Operation

(1) System Description - Provide a detailed discussion of the system

composition and operation. Include technical details that are essential for an understanding of the system.

(2) Start-Up and Shutdown Procedures - Provide step by step instructions to bring systems from static to operational configurations and from operating to shutdown status.

(3) Normal and Emergency Operating Instructions - Provide a discussion of the normal and emergency operation and control of the system. Address operating norms (for example, temperatures, pressures, and flow rates) expected at each zone or phase of the system. Supplement the discussion with control and wiring diagrams and data. Include shutdown instruction for fires, explosions, spill, or other contingencies.

(4) System Flow Diagrams - Provide a flow diagram indicating system liquid, air or gas flow during normal operations. Integrate all system components into the diagram. A compilation of non-integrated, flow diagrams for the individual system components are not acceptable.

(5) Field Test Reports - Provide Field Test Reports (SD-06) that apply to equipment associated with the system. The eOMSI Manual Submittal does not require the second season HVAC testing.

(6) Operator Servicing Requirements - Provide instructions for services to be performed by the operator such as lubrication, adjustments, and inspection.

(7) Valve List - Provide a list of all valves associated with the system. Show valve type, identification number, function, location and normal operating position.

(8) Operating Log - Provide forms, samples, and instructions for keeping necessary operating records.

2.2.3.2 Preventive Maintenance

Provide information in accordance with paragraph PREVENTIVE MAINTENANCE in Section 01 78 23 OPERATION AND MAINTENANCE DATA.

2.2.3.3 Troubleshooting Guides and Diagnostic Techniques

Provide step-by-step procedures for isolating the cause of system malfunctions. Clearly state indications or symptoms of trouble; the sequential instructions, including checks and tests to be performed and conditions to be sought, to determine the cause; and remedial measures to bring the equipment and system to operating condition. Identify special test equipment required to perform the procedures. Start the troubleshooting guide at the system level and proceed to a level where detailed manufacturer's troubleshooting procedures for equipment and components can be referenced. Provide clear references to repair procedures included in the manufacturer's Product Data.

2.2.3.4 Repair

Provide in accordance with paragraph CORRECTIVE MAINTENANCE (REPAIR) and its subparagraphs in Section 01 78 23 OPERATION AND MAINTENANCE DATA. Provide repair procedures and instructions required for restoring

equipment to proper operating condition and standards. References must be specific as to location within the eOMSI Manual.

2.2.4 eOMSI FACILITY DATA WORKBOOK

A pre-edited draft of the Model & Facility Data Matrix tab within the eOMSI Facility Data Workbook is attached to this section. The Government will provide this eOMSI Facility Data Workbook electronically to the Contractor upon award. Complete the KTR Facility Data File tab based on the selection of master systems, systems, and subsystems installed. The following tabs are included in the eOMSI Facility Data File Workbook and serve the purpose stated:

a. Instructions Tab: Instructions for completing Model & Facility Data Matrix Tab and KTR Facility Data File.

b. Model & Facility Data Matrix Tab: - The Matrix lists Required Asset Fields for each SYSTEM and SUBSYSTEM defined within the project scope of work. In column "In Scope," choose "Yes" or "No" to define SYSTEMS and SUBSYSTEMS that are within the project scope, and that Contractor needs to include and populate in KTR Facility Data File tab. Check Box on if BIM is required for the project. For BIM projects, Columns for "DISCIPLINE," LOD," "DESIGN MODEL GRADE," and "RECORD MODEL GRADE," are pre-populated and indicate the level of detail required in the design model. These columns disappear for projects that are not BIM. The "Required Facility Asset Field Position Numbers," one through eighteen, are pre-populated, and are not editable.

c. Required Asset Fields Tab: Defines the 18 Required Facility Asset Field Position Numbers used in Model and Facility Data Matrix and KTR Facility Data File tabs.

d. KTR Sample Facility Data File Tab: Sample KTR eOMSI facility data file. This spreadsheet shows an example of the mandatory fields of all equipment to be included in the KTR eOMSI Facility Data File, along with their descriptions.

e. KTR Facility Data File Tab: Required eOMSI facility data file deliverable provided to the Government. Provide a separated and unique new row for each facility component or piece of equipment installed.

PART 3 EXECUTION

3.1 eOMSI TRAINING

Prior to acceptance of the facility by the Contracting Officer for Beneficial Occupancy, the eOMSI Manual Files (Bookmarked PDF) and eOMSI Facility Data Workbook (Excel) preparer must provide comprehensive training for the systems and equipment of the facility specified in the technical specifications. The trainees must include the Facilities Management Specialist, maintenance staff, and applicable building occupants. Coordinate, schedule, and ensure that training is completed. Instructors must be well-versed in the particular systems that they are presenting. Address all aspects of the eOMSI Manual and Facility Data Workbook submittal. The training team must include at least a mechanical engineer and an electrical engineer. Provide instruction on site at a location approved by the Contracting Officer.

3.1.1 Training Plan

Submit a written training plan to the Contracting Officer for approval at least 60 calendar days prior to the scheduled training. Indicate prior approval of the training plan by the Quality Control Manager (QC) on the submittal forwarded to the Contracting Officer. Also, coordinate the training schedule with the Contracting Officer and QC. Include within the plan the following elements:

a. Equipment included in training

b. Intended audience

c. Location of training

d. Dates of training

e. Objectives

f. Outline of the information to be presented and subjects covered including description

g. Start and finish times and duration of training on each subject

h. Methods (e.g. classroom lecture, video, site walk-through, actual operational demonstrations, written handouts)

i. Instructor names and instructor qualifications for each subject

j. List of texts and other materials required to support training

3.1.2 Training Content

The core of this training must be based on manufacturer's recommendations and the operation and maintenance information defined in Section 01 78 23 OPERATION AND MAINTENANCE DATA. The CA is responsible for overseeing and approving the content and adequacy of the training. Provide a brief summary of "Facility Information" and a more detailed presentation of, "Primary Systems Information". Spend 95 percent of the instruction time during the presentation on the "Primary Systems Information". Include the following for each Primary system training presentation:

a. Start-up, normal operation, shutdown, unoccupied operation, seasonal changeover, manual operation, controls set-up and programming, troubleshooting, and alarms.

b. Relevant health and safety issues.

c. Discussion of how the feature or system is environmentally responsive. Advise adjustments and optimizing methods for energy conservation.

d. Design intent.

e. Use of O&M Manual Files.

f. Review of control drawings and schematics.

g. Interactions with other systems.

h. Special maintenance and replacement sources.

i. Tenant interaction issues.

3.1.3 Training Outline

Provide the eOMSI Manual Files (Bookmarked PDF) and eOMSI Facility Data Workbook and a written course outline listing the major and minor topics to be discussed by the instructor on each day of the course to each trainee in the course. Provide the course outline 14 calendar days prior to the training.

3.1.4 Training Video Recording

Provide to the Contracting Officer two copies of the training course in DVD video recording format. Capture within the recording, in video and audio, all instructors' training presentations including question and answer periods with the trainees. Confirm proposed software used to create the training is compatible with the using activity resources to play the training materials. The recording camera(s) must be attended by a person during the recording sessions to assure proper size of exhibits and projections during the recording are visible and readable when viewed as training.

3.1.5 Unresolved Questions from Trainees

If, at the end of the training course, there are questions from trainees that remain unresolved, the instructor must send the answers, in writing, to the Contracting Officer for transmittal to the trainees, and the training video must be modified to include the appropriate clarifications.

3.1.6 Validation of Training Completion

Ensure that each attendee at each training session signs a class roster daily to confirm Government participation in the training. At the completion of all training, submit a signed validation letter that includes a sample record of training for reporting what systems were included in the training, who provided the training, when and where the training was performed, and copies of the signed class rosters. Provide two copies of the validation to the Contracting Officer, and one copy to the eOMSI Preparer for inclusion into the eOMSI documentation.

3.1.7 Quality Control Coordination

Coordinate the eOMSI training with the CA in Section 01 45 00.00 20 QUALITY CONTROL (PWD ME).

3.2 FIELD VALIDATION

Perform the field validation at the intervals indicated below. Establish the field validation date, to ensure the availability of Government representatives.

The purpose of the validation is to discuss final requirements needed to complete the eOMSI submittals and to conduct field verification. Field validation is used to verify the accuracy and completeness of the eOMSI Submittals.

3.2.1 eOMSI Manual Files Field Validation

Perform the eOMSI Manual field validation when construction is 90 percent complete. This includes verifying that the systems and equipment in the eOMSI submittal accurately reflect the as-built conditions; verifying that O&M procedures are appropriate for the systems and equipment that they support; and verifying that equipment nomenclature and system configurations are accurate.

3.2.2 eOMSI Facility Data Workbook Field Validation

Perform the eOMSI Facility Data Workbook Field Validation at 50 percent and 90 percent construction complete. Provide Field verification of KTR Facility Data File tab for equipment that is easily accessible and does not require deconstruction of installed systems.

For each of the 5 Master Systems below, provide and verify at least 5 (dissimilar if possible) SubSystems or Subitems for a total of 25 line items. For each item, verify that each Required Facility Asset Field, as defined in the Model & Facility Data Matrix tab, is populated and that each Asset Field contains the specified data per the Required Asset Fields tab. Field verify that the data for each item is correct.

a. D10 - CONVEYING

b. D20 - PLUMBING

c. D30 - HVAC

d. D40 - FIRE PROTECTION

e. D50 - ELECTRICAL

100 percent accuracy of all required asset fields is mandatory for successful Field Validation of eOMSI Facility Data Workbook. If errors are discovered during Field Validation, provide and reschedule a follow-on field verification meeting.

-- End of Section --

SECTION 01 91 13

GENERAL COMMISSIONING REQUIREMENTS (PWD ME)
12/14

PART 1 GENERAL

This specification applies to all Design-Bid-Build and Design-Build projects.

1.1 REFERENCES

The publications listed below form a part of this specification to the extent referenced. The publications are referred to within the text by the basic designation only.

AMERICAN SOCIETY OF HEATING, REFRIGERATING AND AIR-CONDITIONING ENGINEERS (ASHRAE)

ASHRAE Guideline 0 (2005) The Commissioning Process

1.2 SCOPE OF COMMISSIONING WORK

a. Commissioning building systems, as described herein and ASHRAE Guideline 0.

b. Basis of Design (BOD): BOD documentation is included by reference for information only.

1.3 SUBMITTALS

Government approval is required for submittals with a "G" designation; submittals not having a "G" designation are for Contractor Quality Control approval. Submit the following in accordance with Section 01 33 00 SUBMITTAL PROCEDURES for Design-Bid-Build projects:

SD-01 Preconstruction Submittals

Commissioning Plan; G

SD-11 Closeout Submittals

Commissioning Report; G

1.4 SUMMARY

Section includes general requirements that apply to implementation of commissioning without regard to specific systems, assemblies, or components.

1.4.1 Related Requirements

a. Air Barrier System for commissioning process activities for building exterior enclosure, roof, and foundation systems, assemblies, equipment, and components. See Appendix 1 of this section.

e. Section 23 09 23.13 20 BACnet DIRECT DIGITAL CONTROL SYSTEMS OF HVAC for commissioning process activities for integrated automation systems, lighting and lighting controls.

f. Division 26 for commissioning process activities for electrical systems, lighting and lighting controls.

g. Division 27 for commissioning process activities for communications systems, assemblies, equipment, and components.

1.5 DEFINITIONS

BOD: Basis of Design. A document that records concepts, calculations, decisions, and product selections used to meet the RFP and to satisfy applicable regulatory requirements, standards, and guidelines. The document includes both narrative descriptions and lists of individual items that support the design process.

CCT: Construction Contracting Team. The team headed by or are under the control of the General Contractor that will construct the project.

Commissioning - Commissioning is a comprehensive and systematic process to verify that the building systems perform as designed to meet the Owner's Project Requirements. Commissioning during the construction, acceptance, and warranty phases is intended to achieve the following specific objectives:

(i) Verify and document that equipment is installed and started per manufacturer's recommendations, industry accepted minimum standards, and the Contract Documents.
(ii) Verify and document that equipment and systems receive complete operational checkout by installing contractors.
(iii) Verify and document equipment and system performance.
(iv) Verify the completeness of operations and maintenance materials.
(v) Ensure that the Government's operating personnel are adequately trained on the operation and maintenance of building equipment.

The commissioning process does not take away from or reduce the responsibility of the system designers or installing Contractors to provide a finished and fully functioning product.

Commissioning Plan: A document developed by the CxA that spells out the organization, schedule, allocation of resources, and documentation requirements of the commissioning process.

CxA: Commissioning Agent: A firm engaged by the Government to manage the commissioning process.

Deficiency - A condition in the installation or function of a component, piece of equipment or system that is not in compliance with the Contract Documents, does not perform properly or is not complying with the Owner's Project Requirements.

Functional Performance Test - Test of the dynamic function and operation of equipment and systems using manual (direct observation) or monitoring methods. Functional testing is the dynamic testing of systems (rather than just components) under full operation (e.g., the chiller pump is

tested interactively with the chiller functions to see if the pump ramps up and down to maintain the differential pressure setpoint). Systems are tested under various modes, such as during low cooling or heating loads, high loads, component failures, unoccupied, varying outside air temperatures, fire alarm, power failure, etc. The systems are run through all the control system's sequences of operation and components are verified to be responding as the sequences state. Traditional air or water test and balancing (TAB) is not functional testing, in the commissioning sense of the word. TAB's primary work is setting up the system flows and pressures as specified, while functional testing is verifying that which has already been set up. The Commissioning Agent develops the functional test procedures in a sequential written form, coordinates, oversees and documents the actual testing, which is usually performed by the installing contractor or vendor. Functional Performance Tests are performed after prefunctional checklists and startup are complete.

Manual Test - Using hand-held instruments, immediate control system readouts or direct observation to verify performance (contrasted to analyzing monitored data taken over time to make the "observation").

Monitoring - The recording of parameters (flow, current, status, pressure, etc.) of equipment operation using dataloggers or the trending capabilities of control systems. Non-Compliance -see Deficiency.

Non-Conformance - see Deficiency.

OPR: Owner's Project Requirements. A document that details the functional requirements of the project and the expectations of how it will be used and operated. These include Project goals, measurable performance criteria, cost considerations, benchmarks, success criteria, and supporting information.

Pre-functional Checklist - A list of items to inspect and elementary component tests to conduct to verify proper installation of equipment, provided by the Commissioning Agent to the contractor. Pre-functional checklists are primarily static inspections and procedures to prepare the equipment or system for initial operation (e.g., belt tension, oil levels OK, labels affixed, gages in place, sensors calibrated, etc.). However, some pre-functional checklist items entail simple testing of the function of a component, a piece of equipment or system (such as measuring the voltage imbalance on a three-phase pump motor of a chiller system). The word "pre-functional" refers to before functional testing. Pre-functional checklists augment and are combined with the manufacturer's start-up checklist.

Seasonal Performance Test - Functional Performance Test that are deferred until the system(s) will experience conditions closer to their design conditions.

Warranty Period - Warranty period for entire project, including equipment components. Warranty begins at Substantial Completion and extends for at least one year, unless specifically noted otherwise in the Contract Documents and accepted submittals.

Systems, Subsystems, Equipment, and Components. Where these terms are used together or separately, they mean both the design as well as the resulting "as-built" systems, subsystems, equipment, and components.

1.6 COMMISSIONING TEAM

Members Appointed by CCT: Individuals, each having the agent to act on behalf of the entity he or she represents, explicitly organized to implement the commissioning process through coordinated action. The commissioning team shall consist of, but not be limited to, representatives of the CCT, including Project Superintendent and subcontractors, installers, suppliers, and specialists deemed appropriate by the CxA, and with the assent of the Government.

1.7 COMMISSIONING PROCESS

Building commissioning activities and documentation include Fundamental Commissioning services. Commissioning is a multi-disciplined process of verifying accurate design, installation and operation of all building systems. The commissioning process should begin in the design phase and continues through occupancy and operation. Core areas encompassed in commissioning include:

a. HVAC components and equipment.

b. HVAC System: interaction of cooling, heating, and comfort delivery systems.

c. Industrial Ventilation Systems: Including interconnection with HVAC systems.

d. Building Automation System (BAS): Control hardware and software, sequence of operations, and integration of factory controls with BAS.

f. Fire alarm system interconnection with the HVAC and lighting control system.

g. Domestic hot water systems.

h. Building Envelope.

1.7.1 Commissioning Tasks

The following activities outline the commissioning tasks and the general order in which they occur. The Commissioning Agent shall coordinate all activities.

a. Design Review and Documentation

(1) Documentation of Basis of Design and Owner’s Project Requirements
(2) Design Development Review
(3) Construction Document Review

b. Commissioning Scoping Meeting
c. Commissioning Plan
d. Submittals Review
e. Start-Up/Pre-Functional Checklists
f. Functional Performance Testing
g. Short-Term Diagnostic Testing

h. Efficiency Report and Resolution Record
i. Operations and Maintenance Training

(1) O&M Manual
(2) Training
(3) O&M Database

j. Record Documents Review
k. Final Commissioning Report
l. Deferred Testing

(1) Unforeseen Deferred Tests
(2) Seasonal Testing
(3) End-of-Warranty Review

1.7.1.1 Commissioning Task Descriptions

Basis of Design and Owner's Project Requirements - Update as necessary during the work to reflect the progress on the components and systems.

Scoping Meeting Minutes - Capture salient elements of discussion, principal hurdles and proposed solutions for each commissioning planning and coordination effort with the Designer of Record and Construction Integrator.

Commissioning Plan - Submit Commissioning Plan within 120 calendar days of authorization to proceed. Update as necessary during the work to reflect the progress on the components and systems. Forward updates to the CCT and Designer of Record in a timely manner.

Commissioning Schedule - Submit Schedule with Commissioning Plan. Update as necessary during the work to reflect the progress on the components and systems. Forward updates to the CCT and Designer of Record in a timely manner.

Pre-Functional Performance Test Forms - Submit minimum 30 calendar days prior to testing.

Functional Testing Coordination - Equipment shall not be "temporarily" started for commissioning. Functional performance testing shall not begin until pre-functional, start-up and TAB is completed for a given system. The controls system and equipment it controls shall not be functionally tested until all points have been calibrated and pre-functional checklists are completed.

Deficiency Report and Resolution Record - Document items of non-compliance in materials, installation or operation. Document the results from start-up/pre-functional checklists, functional performance testing, and short-term diagnostic monitoring. Include details of the components or systems found to be non-compliant with the drawings and specifications. Identify adjustments and alterations required to correct the system operation, and identify who is responsible for making the corrective changes. Update as necessary during the work to reflect the progress on the components and systems. Forward updates to the CCT and Designer of Record in a timely manner.

Final Commissioning Report: Compile a final Commissioning Report.

Summarize all of the tasks, findings, conclusions, and recommendations of the commissioning process. Indicate the actual performance of the building systems in reference to the Owner's Project Requirements and contract documents. Include completed pre-functional inspection checklists, functional performance testing records, diagnostic monitoring results, identified deficiencies, recommendations, and a summary of commissioning activities.

Operation and Maintenance (O&M) Submittals - Training Plan to include:

(i) Dates, start and finish times, and locations; Outline of the information to be presented;
(ii) Names and qualifications of the presenters;
(iii) List of texts and other materials required to support training.

1.7.2 Construction Contractor

1.7.2.1 Construction and Acceptance Phase

a. Facilitate coordination of commissioning work by CxA.

b. Attend commissioning scoping meeting, controls integration meeting and additional meetings, as necessary.

c. Furnish copies of construction documents, addenda, change orders and approved submittals and design drawings related to commissioned equipment to CxA.

d. Ensure Subcontractor execute their commissioning responsibilities according to Project Manual and Commissioning Plan.

e. Coordinate training of Government personnel.

f. Work with Subcontractor to prepare operations and maintenance manuals, according to Project Manual, including updating original sequences of operation to Record (As-Built) conditions.

g. Develop start-up and checkout plan for commissioned equipment based on manufacturer's recommendations and pre-functional checklists from CxA.

h. Submit to CxA for review and approval prior to start-up.

1.7.2.2 Warranty Period

a. Ensure execution of required seasonal or deferred functional performance testing.

b. Ensure correction of deficiencies and make necessary adjustments to operations and maintenance manuals and As-Built Drawings for issues identified during warranty period.

1.7.3 HVAC, Plumbing, Electrical, and Controls

1.7.3.1 Construction and Acceptance Phases

a. Attend commissioning scoping meeting, controls integration meeting and additional meetings.

b. Provide additional requested documentation prior to normal operations

and maintenance manual submittals, to CxA for development of start-up and functional testing procedures.

c. Assist in clarification of operation and control of commissioned equipment where Contract Documents, control drawings or equipment documentation is not sufficient for writing detailed testing procedures.

d. Assist to develop start-up and checkout plan for commissioned equipment based on manufacturer's recommendations and pre-functional checklists from CxA.

e. During startup and checkout process, execute pre-functional checklists for commissioned equipment.

(1) Perform and document completed startup and system operational checkout procedures.

f. Resolve master deficiency list items before functional testing, as developed by CxA.

(1) Air and water Testing, Adjusting, and Balancing to be completed with discrepancies and problems resolved before functional testing.

g. Perform functional performance testing, under direction of CxA, for commissioned equipment. Resolve equipment or system deficiencies and retest as required to verify modified performance. Allow adequate time for training. Coordinate training schedules through the CxA.

h. Prepare operations and maintenance manuals according to Project Manual, including updating original sequences of operation to record conditions.

i. Provide training of the Government's operating personnel.

j. Coordinate with equipment manufacturers to determine requirements to maintain validity of warranties.

1.7.3.2 Warranty Period

a. Execute seasonal or deferred functional performance testing.

b. Correct deficiencies and make necessary adjustments to Operations And Maintenance Manuals and As-Built Drawings for issues identified during warranty period.

1.7.4 Controls Commissioning

Controls Commissioning is included as part of the CCT responsibilities during construction and acceptance phases in addition to those listed, which are:

1.7.4.1 Sequences of Operation Submittals

Temperature controls submittals to include complete and detailed sequences of operation for each piece of equipment, regardless of completeness and clarity of sequences in Specifications and include:

a. Narrative description of system, describing its purpose, components

and function.

b. Interactions and interlocks with other systems.

c. Delineation of control interactions between packaged controls and building automation system, including listing of monitored points, controlled points, and adjustable points.

d. Written sequences of control for packaged controlled equipment.

e. Sequences of control for modes of operation (Start-up, Warm-up, Cool-down, Normal occupied, Unoccupied, Emergency Shutdown, etc.).

f. Capacity control sequences and equipment staging.

g. Temperature and pressure control sequences (setbacks, resets, etc.).

h. Sequences for control strategies (economizer control, optimum start/stop, optimization, demand limiting, etc.).

i. Effects of power or equipment failure with standby component functions.

j. Sequences for alarms and emergency shutdowns.

k. Seasonal operational requirements.

l. Trending, setup of points for trending purposes as coordinated and agreed on by Commissioning Teams coordination.

1.7.4.2 Control Drawings Submittal

a. Control drawings to have key to abbreviations which shall be consistent throughout the documentation.

b. Provide graphic schematic depictions of systems and each component.

c. Schematics to include system and component layout of equipment that control system monitors, enables or controls, even if equipment is primarily controlled by packaged or integral controls.

d. Provide full points list including the following:

(1) Controlled system
(2) Point abbreviation
(3) Point description
(4) Point type (digital/analog, input/output)
(5) Display unit
(6) Control point or setpoint (Yes/No)
(7) Monitoring point (Yes/No)
(8) Intermediate point (Yes/No)
(9) Calculated point (Yes/No)

1.7.4.3 As-Built Drawings

As-Built Drawing version of control drawings and sequences of operation to be included in final Controls Operations And Maintenance Manual Submittal in accordance with Section 01 78 00.00 22 CLOSEOUT SUBMITTALS (PWD ME).

1.7.4.4 Written Plan

Controls Contractor to prepare written plan indicating step-by-step manner, and procedures that will be followed to test, checkout and adjust control system prior to functional performance testing.

1.7.4.5 Certification

Signed and dated certification to CxA and the Government upon completion of control system checkout.

1.7.5 Equipment Suppliers

a. Provide requested submittal data, including detailed start-up procedures and specific responsibilities of the Government to keep warranties in effect.

b. Provide information requested by CxA regarding equipment sequence of operation and testing procedures.

c. Assist in equipment testing per agreements with suppliers.

1.8 CCT'S RESPONSIBILITIES

The CCT shall assign representatives with expertise and an agent to act on its behalf and shall schedule them to participate in and perform commissioning process activities including, but not limited to, the following:

a. Evaluate performance deficiencies identified in test reports and, in collaboration with entity responsible for system and equipment installation, recommend corrective action.

b. Cooperate with the CxA for resolution of issues recorded in the Issues Log.

c. Attend commissioning team meetings held on a biweekly basis.

d. Coordinate Contractor's testing, inspection, and quality assurance activities with related activities of the CxA.

e. Integrate and coordinate commissioning process activities with construction schedule.

f. Review, accept, and incorporate from construction checklists provided by the CxA.

g. Complete paper construction checklists as Work is completed and provide to the CxA and CMa on a weekly basis.

h. Review and accept commissioning process test procedures provided by the CxA.

i. Complete commissioning process test procedures and provide testing records.

1.9 CxA'S RESPONSIBILITIES

The CxA develops and leads a comprehensive and systematic process to

verify that the building systems perform is designed to meet the Owner's Project Requirements. Commissioning during the construction, acceptance, and warranty phases is intended to achieve the following specific objectives:

a. Verify and document that equipment is installed and started per manufacturer's recommendations, industry accepted minimum standards, and the Contract Documents.

b. Verify and document that equipment and systems receive complete operational checkout by installing Contractors.

c. Verify and document equipment and system performance.

d. Verify the completeness of operations and maintenance materials.

e. Ensure that the Government's operating personnel are adequately trained on the operation and maintenance of building equipment.

1.9.1 Specific Responsibilities of The CxA Include:

a. Provide Fundamental Commissioning.

c. Organize and lead the Commissioning Team.

d. Provide Commissioning Plan.

e. Convene commissioning team meetings.

f. Provide project-specific construction checklists and commissioning process test procedures.

g. Verify the execution of commissioning process activities using random sampling. The sampling rate may vary from 1 to 100 percent. Verification will include, but is not limited to, equipment submittals, construction checklists, training, operating and maintenance data, tests, and test reports to verify compliance with the RFP. When a random sample does not meet the requirement, the CxA will report the failure in the Issues Log.

h. Prepare and maintain the Issues Log.

i. Prepare and maintain completed Construction Checklist Log.

j. Witness systems, assemblies, equipment, and component startup.

k. Compile test data, inspection reports, and certificates; include them in the systems Manual and Commissioning Process Report.

1.10 COMMISSIONING SCOPE

Commissioning scope includes the following:

DDC Control System
Variable frequency drives
General exhaust fans

HVAC pumps

Energy management systems and control strategies

Air handling units

Computer room units
Heat exchangers

Building envelope testing [1]
Electrical systems [2]

[1] Building envelope testing, including thermal imaging, will be provided by the Contractor. The CxA will track the activities and include the final information in the commissioning report.

[2] These systems will be tested by the Contractor, except as noted above. CxA will track the activities and include the final information in the commissioning report.

1.11 COMMISSIONING RESPONSIBILITIES

1.11.1 Construction Contracting Team (CCT)

a. Facilitates commissioning process; ensures the contractor's team performs their responsibilities; and integrates commissioning into construction process and schedule.

   (1) Integrates commissioning activities into construction process and schedule.
   (2) Ensures Contractor's team executes their responsibilities, including commissioning requirements.
   (3) Perform normal review of submittals, management and resolution of Request for Information (RFI's) and tracking of change orders.
   (4) Provide adequate accessibility to all mechanical/electrical equipment for maintenance and component replacement or repair.
   (5) Ensures that Contractor's team witness start-up tests and pre-functional checklists of equipment and systems.
   (6) Verify readiness for commissioning.
   (7) Assist in training of Government personnel.
   (8) Assemble and review O&M Manuals
   (9) Remedy deficiencies identified during testing and commissioning.
   (10) Ensure completion of punch list items.
   (11) Obtain final inspection approvals.
   (12) Warranty period responsibilities.

1.11.2 Demonstrate Proper System Performance

a. Integrates commissioning activities into construction process and schedule.
b. Ensure cooperation and participation of Contractor's team.
c. Ensure participation of major equipment manufacturers in appropriate training and testing activities
d. Perform start-up, pre-functional checkout and functional performance testing
e. Conduct appropriate trade system orientation and training.
f. Prepare and submit O & M manuals.
g. Remedy deficiencies identified during testing and commissioning.

h. Ensure completion of punch list items.

1.11.3 Manufacturers Reps/Vendors (MR)

a. Provide documentation to facilitate the commissioning work and perform contracted start-up.
b. Provide submittals and appropriate O & M manual sections.
c. Participate in training sessions.
d. Review test procedures developed for the commissioning process.
e. Demonstrate performance of equipment.

PART 2 PRODUCTS

2.1 TEST EQUIPMENT

a. Standard testing equipment required to perform startup and initial checkout and required functional performance testing to be provided by CCT for equipment being tested.

b. Testing equipment to be of sufficient quality and accuracy to test or measure system performance as required by the Specifications.

c. Data-logging equipment or software required to test equipment to be provided by Contractors but shall not become property of the Government.

PART 3 EXECUTION

3.1 DESIGN REVIEW AND DOCUMENTATION

a. Document basis of design and Owner's Project Requirements as they relate to environmentally responsive characteristics, including:

(1) Functionality
(2) Energy performance
(3) Water efficiency
(4) Maintainability
(5) System cost
(6) Indoor environmental quality
(7) Local environmental impacts

b. Review design documents to verify that each commissioned system meets the Owner's Project Requirements.

c. Review construction documents to verify that commissioning is adequately specified, that each commissioned system can be commissioned and is likely to meet the Owner's Project Requirements.

3.2 COMMISSIONING SCOPE MEETING

a. Schedule, coordinate, and facilitate a scoping meeting to sound out nature of systems that are included within the commissioning effort.

b. Review each building system to be commissioned, including its intended operation, commissioning requirements, and completion and start-up schedules.

c. Establish the scope of work, tasks, schedules, deliverables, and responsibilities for implementation of the Commissioning Plan.

3.3 COMMISSIONING PLAN

a. Develop a commissioning plan to identify how commissioning activities will be integrated into general construction and trade activities.

b. The commissioning plan shall identify how commissioning responsibilities are distributed. The intent of this plan is to evoke questions, expose issues, and resolve them with input from the entire commissioning team before construction even begins.

c. Identify who will be responsible for producing the various procedures, reports, Government notifications and forms.

d. Include the commissioning schedule.

e. Describe the test/acceptance procedure.

3.4 SUBMITTAL REVIEWS

Review the Contractor submittals to verify that the material, equipment and systems provided meet the requirements of the Contract Documents and Owner's Project Requirements.

3.5 START-UP / PREFUNCTIONAL INSPECTION CHECKLISTS

The following procedures apply to commissioned equipment.

a. Pre-functional Inspection Checklists are developed and completed for major equipment and systems being commissioned. Manufacturer's start-up checklists and other technical documentation guidelines may be used as the basis for pre-functional checklists.

   (1) Checklist documents equipment nameplate and characteristics data and confirms as-built status of equipment or system.

   (2) Checklists ensure systems are complete and operational, so functional performance testing can be scheduled.

b. Start-Up Plan. Develop detailed start-up plans to verify that the equipment and systems are complete and operational, so that the functional performance testing can be scheduled.

   (1) Each start-up item will have a space for the appropriate Contractor to date and initial at time of completion of start-up procedures.

   (2) Start-up plans and documentation to be provided to the Government and Design Team for review.

c. Completion of Pre-functional Inspection Checklists and Startup:

   (1) CCT assures equipment suppliers schedule startup and checkout with the Government and CxA.

      (a) Multiple Units: Sampling strategy may be used according to Commissioning Plan for lower level equipment components (i.e. VAV boxes, reheat coils).

(2) CCT with their Vendors execute startup and provide CxA with signed and dated copy of completed start-up and pre-functional inspection checklists.

(a) Only individuals who have completed or witnessed line item task to make initials or checks on forms.

d. Deficiencies, Non-Conformance and Approval in Checklists and Startup.

(1) CCT to clearly list any items of start-up and pre-functional procedures not successfully completed at bottom of form or on an attached sheet.

(a) Procedures form and any outstanding deficiencies are provided to CxA within two days of test completion.

3.6 FUNCTIONAL PERFORMANCE TESTING

Following procedures apply to all equipment commissioned and to all commissioning functional performance testing.

3.6.1 Objectives and Scope

a. Demonstrate each system is operating according to documented design intent and Construction Documents.

b. Functional performance testing comprises tests to verify components, equipment, systems, and interfaces between systems operate correctly and includes operating modes, interlocks, control sequences, and responses to emergency conditions.

3.6.2 Execution of Functional Performance Tests

a. Test Methods: Functional performance testing and verification may be achieved by direct manipulation of system inputs (i.e. heating or cooling sensors), manipulation of system inputs with building automation system (i.e. software override of sensor inputs), trend logs of system inputs and outputs using building automation system, or short-term monitoring of system inputs and outputs using stand alone data loggers.

(1) Combination of methods may be required to test complete sequence of operations, subject to Government determination of which method, or combination, is most appropriate.

b. Setup: Each test procedure is performed under conditions that simulate normal operating conditions as closely as possible.

(1) Develop functional performance test procedures for equipment and systems. Identify specific test procedures and forms to verify and document proper operation of each piece of equipment and system. Coordinate test procedures with the contractor for feasibility, safety, equipment and warranty protection. Functional performance test forms shall include the following information:

- System and equipment or component name(s).
- Equipment location and ID number.
- Date.

- Project name.
- Participating parties.
- Instructions for setting up the test, including special cautions, alarm limits, etc.
- Specific step-by-step procedures to execute the test.
- Acceptance criteria of proper performance with a Yes or No check box.
- A section for comments.

(2) Where equipment requires integral safety devices to stop/prevent equipment operation unless minimum safety standards or conditions are met, functional performance test procedures shall demonstrate the actual performance of safety shutoffs in a real or closely simulated conditions of failure.

(3) Subcontractor executing test provides necessary system modifications to produce specified conditions (flows, pressures, temperatures, etc) necessary to execute test and, at completion of test, returns affected building equipment and systems to their pre-test conditions.

c. Sampling: Multiple identical pieces of non-life-safety or non-critical equipment may be functionally tested using a sampling strategy. The sampling strategy shall be developed by the Commissioning Agent. If, after three attempts at testing the specified sample percentage, failures are still present, then all remaining units shall be tested at the Contractors' expense.

d. Test Values: After three attempts at testing, if specified sample percentage, failures are still present, remaining units are tested at Contractors' expense.

3.6.3 Coordination and Scheduling

CCT provides sufficient notice to the government regarding completion schedule for pre-functional checklists and startup of equipment and systems.

a. The Government schedules functional tests and CCT conducts sequential priorities followed:

(1) Equipment is not "temporarily" started (for heating or cooling), until pre-start checklist items and manufacturer's pre-start procedures are completed and moisture, dust and other environmental and building integrity issues have been addressed.

(2) Functional performance testing does not begin until pre-functional, start-up and Testing, Adjusting and Balancing (TAB) are completed for given system.

(3) Controls system and equipment it controls are not functionally tested until points have been calibrated and pre-functional checklists are completed.

3.6.4 Problem Solving

As directed, CCT shall resolve, correct and retest deficiencies.

3.7 DOCUMENTATION, NON-CONFORMANCE AND APPROVAL OF TESTES

3.7.1 Non-Conformance

a. Results of functional testing are recorded by the CxA.

(1) Deficiencies identified during verification testing are documented on standard form and reported to the Government and CCT.

(2) Deficiency Report: Includes details of components or systems found to be non-compliant with parameters of test plans.

(3) Report details adjustments or alterations required to correct system operation, and identifies responsible party.

b. Corrections of minor deficiencies identified may be made during tests at discretion of CxA and deficiency and resolution documented on procedure form.

c. Make every effort to expedite testing process and minimize unnecessary delays, while not compromising integrity of procedures.

d. Identified deficiency resolution:

(1) No dispute on deficiency and responsibility to correct it if:

(a) CxA documents deficiency and adjustments or alterations required to correct it.
(b) CCT corrects deficiency and notifies CxA that equipment is ready to be retested.
(c) CxA reschedules test and test is repeated.

(2) Dispute about deficiency or who is responsible:

(a) Deficiency is documented on non-compliance form and copy given to the Government and CCT.
(b) Resolutions are made at lowest management level possible and additional parties are brought into discussions as needed.

Final interpretive authority is with the Government.
Final acceptance authority is with the Government.

(c) CxA documents resolution process.
(d) Once interpretation and resolution have been decided, appropriate party corrects deficiency and notifies CxA that equipment is ready to be retested.
(e) CxA reschedules test and test is repeated until satisfactory performance is achieved.

3.7.2 Cost of Retesting

a. CCT

(1) Responsible for costs to retest pre-functional or functional test, if they are responsible for deficiency.

(2) If not responsible for deficiency, cost recovery for retesting costs to be negotiated with CCT.

b. Time for CxA and the Government to approve any retesting recommended by the by the CCT because pre-functional checklist or start-up test item, reported to have been successfully completed, but determined during functional testing to be faulty, will be back charged.

3.7.3 Approval

The Government gives final approval on each test.

3.8 DEFERRED TESTING

3.8.1 Unforeseen Deferred Tests

Functional testing that cannot be completed due to building structure, required occupancy condition, or other deficiency may be delayed upon approval of the Government.

a. Tests are conducted in same manner as seasonal tests as soon as possible.

3.8.2 Seasonal Testing

Seasonal variation in operations or control strategies may require additional testing during opposite season to verify performance of HVAC system and controls.

a. During warranty period: Seasonal testing and other deferred testing is completed as required to fully test sequences of operation.

   (1) CxA coordinates these activities.

b. Tests are executed and documented, with deficiencies corrected by appropriate.

c. Final adjustments to OPERATIONS AND MAINTENANCE DOCUMENTATION.

3.8.3 End of Warranty Review

Conduct end of warranty review prior to the end of the warranty period. Review the current building operation with the facility maintenance staff.

a. The review shall include outstanding issues from original or seasonal testing. Interview facility staff to identify concerns with building operation.

b. Provide suggestions for improvements and assist Government in developing reports or documentation to remedy problems.

c. Update O&M manuals and Record Documents as necessary due to the testing.

3.9 FINAL COMMISSIONING REPORT

a. Final Commissioning Report: Compile final commissioning report. Summarize all of the tasks, findings, conclusions, and recommendations of the commissioning process.

-- End of Section --

SECTION 02 41 00

DEMOLITION AND DECONSTRUCTION
05/10

PART 1 GENERAL

1.1 REFERENCES

The publications listed below form a part of this specification to the extent referenced. The publications are referred to within the text by the basic designation only.

AIR-CONDITIONING, HEATING AND REFRIGERATION INSTITUTE (AHRI)

AHRI Guideline K	(2009) Guideline for Containers for Recovered Non-Flammable Fluorocarbon Refrigerants

AMERICAN SOCIETY OF SAFETY ENGINEERS (ASSE/SAFE)

ASSE/SAFE A10.6	(2006) Safety Requirements for Demolition Operations

U.S. ARMY CORPS OF ENGINEERS (USACE)

EM 385-1-1	(2008; Errata 2011) Safety and Health Requirements Manual

U.S. DEFENSE LOGISTICS AGENCY (DLA)

DLA 4145.25	(Jun 2000; Reaffirmed Oct 2010) Storage and Handling of Liquefied and Gaseous Compressed Gases and Their Full and Empty Cylinders http://www.aviation.dla.mil/UserWeb/aviationengineerir

U.S. DEPARTMENT OF DEFENSE (DOD)

DOD 4000.25-1-M	(2006) MILSTRIP - Military Standard Requisitioning and Issue Procedures
MIL-STD-129	(2014; Rev R) Military Marking for Shipment and Storage

U.S. NATIONAL ARCHIVES AND RECORDS ADMINISTRATION (NARA)

40 CFR 61	National Emission Standards for Hazardous Air Pollutants
40 CFR 82	Protection of Stratospheric Ozone
49 CFR 173.301	Shipment of Compressed Gases in Cylinders and Spherical Pressure Vessels

1.2 PROJECT DESCRIPTION

1.2.1 Demolition/Deconstruction Plan

Prepare a Demolition Plan and submit proposed salvage, demolition, and removal procedures for approval before work is started. Include in the plan procedures for careful removal and disposition of materials specified to be salvaged, coordination with other work in progress, a disconnection schedule of utility services, a detailed description of methods and equipment to be used for each operation and of the sequence of operations. Identify components and materials to be salvaged for reuse or recycling with reference to paragraph Existing Facilities to be Removed. Append tracking forms for all removed materials indicating type, quantities, condition, destination, and end use. Coordinate with Waste Management Plan. Provide procedures for safe conduct of the work in accordance with EM 385-1-1. Plan shall be approved by Contracting Officer prior to work beginning.

1.2.2 General Requirements

Do not begin demolition or deconstruction until authorization is received from the Contracting Officer. The work of this section is to be performed in a manner that maximizes the value derived from the salvage and recycling of materials. Remove rubbish and debris from the project site; do not allow accumulations inside or outside the building . The work includes demolition, , salvage of identified items and materials, and removal of resulting rubbish and debris. Remove rubbish and debris from Government property daily, unless otherwise directed. Store materials that cannot be removed daily in areas specified by the Contracting Officer. In the interest of occupational safety and health, perform the work in accordance with EM 385-1-1, Section 23, Demolition, and other applicable Sections.

1.3 ITEMS TO REMAIN IN PLACE

Take necessary precautions to avoid damage to existing items to remain in place, to be reused, or to remain the property of the Government. Repair or replace damaged items as approved by the Contracting Officer. Coordinate the work of this section with all other work indicated. Construct and maintain shoring, bracing, and supports as required. Ensure that structural elements are not overloaded. Increase structural supports or add new supports as may be required as a result of any cutting, removal, deconstruction, or demolition work performed under this contract. Do not overload structural elements . Provide new supports and reinforcement for existing construction weakened by demolition, deconstruction, or removal work. Repairs, reinforcement, or structural replacement require approval by the Contracting Officer prior to performing such work.

1.3.1 Existing Construction Limits and Protection

Do not disturb existing construction beyond the extent indicated or necessary for installation of new construction. Provide temporary shoring and bracing for support of building components to prevent settlement or other movement. Provide protective measures to control accumulation and migration of dust and dirt in all work areas. Remove dust, dirt, and debris from work areas daily.

1.3.2 Weather Protection

For portions of the building to remain, protect building interior and materials and equipment from the weather at all times. Where removal of existing roofing is necessary to accomplish work, have materials and workmen ready to provide adequate and temporary covering of exposed areas.

1.3.3 Trees

Protect trees within the project site which might be damaged during demolition or deconstruction, and which are indicated to be left in place, by a 6 foot high fence. Erect and secure fence a minimum of 5 feet from the trunk of individual trees or follow the outer perimeter of branches or clumps of trees. Replace any tree designated to remain that is damaged during the work under this contract with like-kind or as approved by the Contracting Officer.

1.3.4 Utility Service

Maintain existing utilities indicated to stay in service and protect against damage during demolition and deconstruction operations. Prior to start of work, utilities serving each area of alteration or removal will be shut off by the Government and disconnected and sealed by the Contractor .

1.3.5 Facilities

Protect electrical and mechanical services and utilities. Where removal of existing utilities and pavement is specified or indicated, provide approved barricades, temporary covering of exposed areas, and temporary services or connections for electrical and mechanical utilities. Floors, roofs, walls, columns, pilasters, and other structural components that are designed and constructed to stand without lateral support or shoring, and are determined to be in stable condition, must remain standing without additional bracing, shoring, or lateral support until demolished or deconstructed, unless directed otherwise by the Contracting Officer. Ensure that no elements determined to be unstable are left unsupported and place and secure bracing, shoring, or lateral supports as may be required as a result of any cutting, removal, deconstruction, or demolition work performed under this contract.

1.4 BURNING

The use of burning at the project site for the disposal of refuse and debris will not be permitted . Where burning is permitted, adhere to federal, state, and local regulations.

1.5 SUBMITTALS

Government approval is required for submittals with a "G" designation; submittals not having a "G" designation are for information only. When used, a designation following the "G" designation identifies the office that will review the submittal for the Government. Submit the following in accordance with Section 01 33 00 SUBMITTAL PROCEDURES:

SD-01 Preconstruction Submittals

Demolition Plan; G
Existing Conditions

SD-07 Certificates

Notification; G

SD-11 Closeout Submittals

Receipts

1.6 QUALITY ASSURANCE

Submit timely notification of demolition and renovation projects to Federal, State, regional, and local authorities in accordance with 40 CFR 61, Subpart M. Notify the State's environmental protection agency and the Contracting Officer in writing 10 working days prior to the commencement of work in accordance with 40 CFR 61, Subpart M. Comply with federal, state, and local hauling and disposal regulations. In addition to the requirements of the "Contract Clauses," conform to the safety requirements contained in ASSE/SAFE A10.6. Comply with the Environmental Protection Agency requirements specified. Use of explosives will not be permitted.

1.6.1 Dust and Debris Control

Prevent the spread of dust and debris to occupied portions of the building and avoid the creation of a nuisance or hazard in the surrounding area. Do not use water if it results in hazardous or objectionable conditions such as, but not limited to, ice, flooding, or pollution. Vacuum and dust the work area daily .

1.7 PROTECTION

1.7.1 Protection of Personnel

Before, during and after the demolition work continuously evaluate the condition of the structure being demolished and take immediate action to protect all personnel working in and around the project site. No area, section, or component of floors, roofs, walls, columns, pilasters, or other structural element will be allowed to be left standing without sufficient bracing, shoring, or lateral support to prevent collapse or failure while workmen remove debris or perform other work in the immediate area.

1.8 RELOCATIONS

Perform the removal and reinstallation of relocated items as indicated with workmen skilled in the trades involved. Repair or replace items to be relocated which are damaged by the Contractor with new undamaged items as approved by the Contracting Officer.

1.9 EXISTING CONDITIONS

Before beginning any demolition or deconstruction work, survey the site and examine the drawings and specifications to determine the extent of the work. Record existing conditions in the presence of the Contracting Officer showing the condition of structures and other facilities adjacent to areas of alteration or removal. Photographs sized 4 inch will be acceptable as a record of existing conditions. Include in the record the elevation of the top of foundation walls, finish floor elevations,

possible conflicting electrical conduits, plumbing lines, alarms systems, the location and extent of existing cracks and other damage and description of surface conditions that exist prior to before starting work. It is the Contractor's responsibility to verify and document all required outages which will be required during the course of work, and to note these outages on the record document. Submit survey results.

PART 2 PRODUCTS

NOT USED

PART 3 EXECUTION

3.1 EXISTING FACILITIES TO BE REMOVED

Inspect and evaluate existing structures onsite for reuse. Existing construction scheduled to be removed for reuse shall be disassembled. Dismantled and removed materials are to be separated, set aside, and prepared as specified, and stored or delivered to a collection point for reuse, remanufacture, recycling, or other disposal, as specified. Materials shall be designated for reuse onsite whenever possible.

3.1.1 Utilities and Related Equipment

3.1.1.1 General Requirements

Do not interrupt existing utilities serving occupied or used facilities, except when authorized in writing by the Contracting Officer. Do not interrupt existing utilities serving facilities occupied and used by the Government except when approved in writing and then only after temporary utility services have been approved and provided. Do not begin demolition or deconstruction work until all utility disconnections have been made. Shut off and cap utilities for future use, as indicated.

3.1.1.2 Disconnecting Existing Utilities

Remove existing utilities , as indicated and terminate in a manner conforming to the nationally recognized code covering the specific utility and approved by the Contracting Officer. When utility lines are encountered but are not indicated on the drawings, notify the Contracting Officer prior to further work in that area. Remove meters and related equipment and deliver to a location in accordance with instructions of the Contracting Officer.

3.1.2 Miscellaneous Metal

Salvage shop-fabricated items such as access doors and frames, steel gratings, metal ladders, wire mesh partitions, metal railings, metal windows and similar items as whole units. Salvage light-gage and cold-formed metal framing, such as steel studs, steel trusses, metal gutters, roofing and siding, metal toilet partitions, toilet accessories and similar items. Recycle scrap metal as part of demolition and deconstruction operations. Provide separate containers to collect scrap metal and transport to a scrap metal collection or recycling facility, in accordance with the Waste Management Plan.

3.1.3 Carpentry

Salvage for recycle lumber, millwork items, and finished boards, and sort

by type and size. recycle salvaged wood unfit for reuse, except stained, painted, or treated wood. Salvage windows, doors, frames, and cabinets, and similar items as whole units, complete with trim and accessories. Do not remove hardware attached to units, except for door closers. Salvage hardware attached to units for reuse. Brace the open end of door frames to prevent damage.

3.1.4 Acoustic Ceiling Tile

Remove, neatly stack, and recycle acoustic ceiling tiles. Recycling may be available with manufacturer. Otherwise, priority shall be given to a local recycling organization. Recycling is not required if the tiles contain or may have been exposed to asbestos material.

3.1.5 Patching

Where removals leave holes and damaged surfaces exposed in the finished work, patch and repair these holes and damaged surfaces to match adjacent finished surfaces, using on-site materials when available. Where new work is to be applied to existing surfaces, perform removals and patching in a manner to produce surfaces suitable for receiving new work. Finished surfaces of patched area shall be flush with the adjacent existing surface and shall match the existing adjacent surface as closely as possible as to texture and finish. Patching shall be as specified and indicated, and shall include:

a. Concrete and Masonry: Completely fill holes and depressions, caused by previous physical damage or left as a result of removals in existing masonry walls to remain, with an approved masonry patching material, applied in accordance with the manufacturer's printed instructions.

b. Where existing partitions have been removed leaving damaged or missing resilient tile flooring, patch to match the existing floor tile.

c. Patch acoustic lay-in ceiling where partitions have been removed. The transition between the different ceiling heights shall be effected by continuing the higher ceiling level over to the first runner on the lower ceiling and closing the vertical opening with a painted sheet metal strip.

3.1.6 Air Conditioning Equipment

Recover all refrigerants prior to removing air conditioning, refrigeration, and other equipment containing refrigerants and dispose of in accordance with the paragraph entitled "Disposal of Ozone Depleting Substance (ODS)." Turn in salvaged Class I ODS refrigerants as specified in paragraph, "Salvaged Materials and Equipment."

3.1.7 Mechanical Equipment and Fixtures

Disconnect mechanical hardware at the nearest connection to existing services to remain, unless otherwise noted. Disconnect mechanical equipment and fixtures at fittings. Remove service valves attached to the unit. Salvage each item of equipment and fixtures as a whole unit; listed, indexed, tagged, and stored. Salvage each unit with its normal operating auxiliary equipment. Transport salvaged equipment and fixtures, including motors and machines, to a designated storage area as directed by the Contracting Officer. Do not remove equipment until approved. Do not offer low-efficiency equipment for reuse.

3.1.7.1 Preparation for Storage

Remove water, dirt, dust, and foreign matter from units; tanks, piping and fixtures shall be drained; interiors, if previously used to store flammable, explosive, or other dangerous liquids, shall be steam cleaned. Seal openings with caps, plates, or plugs. Secure motors attached by flexible connections to the unit. Change lubricating systems with the proper oil or grease.

3.1.7.2 Piping

Disconnect piping at unions, flanges and valves, and fittings as required to reduce the pipe into straight lengths for practical storage. Store salvaged piping according to size and type. If the piping that remains can become pressurized due to upstream valve failure, end caps, blind flanges, or other types of plugs or fittings with a pressure gage and bleed valve shall be attached to the open end of the pipe to ensure positive leak control. Carefully dismantle piping that previously contained gas, gasoline, oil, or other dangerous fluids, with precautions taken to prevent injury to persons and property. Store piping outdoors until all fumes and residues are removed. Box prefabricated supports, hangers, plates, valves, and specialty items according to size and type. Wrap sprinkler heads individually in plastic bags before boxing. Classify piping not designated for salvage, or not reusable, as scrap metal.

3.1.7.3 Ducts

Classify removed duct work as scrap metal.

3.1.7.4 Fixtures, Motors and Machines

Remove and salvage fixtures, motors and machines associated with plumbing, heating, air conditioning, refrigeration, and other mechanical system installations. Salvage, box and store auxiliary units and accessories with the main motor and machines. Tag salvaged items for identification, storage, and protection from damage. Classify broken, damaged, or otherwise unserviceable units and not caused to be broken, damaged, or otherwise unserviceable as debris to be disposed of by the Contractor.

3.1.8 Electrical Equipment and Fixtures

Salvage motors, motor controllers, and operating and control equipment that are attached to the driven equipment. Salvage wiring systems and components. Box loose items and tag for identification. Disconnect primary, secondary, control, communication, and signal circuits at the point of attachment to their distribution system.

3.1.8.1 Fixtures

Remove and salvage electrical fixtures. Salvage unprotected glassware from the fixture and salvage separately. Salvage incandescent, mercury-vapor, and fluorescent lamps and fluorescent ballasts manufactured prior to 1978, boxed and tagged for identification, and protected from breakage.

3.1.8.2 Electrical Devices

Remove and salvage switches, switchgear, transformers, conductors

including wire and nonmetallic sheathed and flexible armored cable, regulators, meters, instruments, plates, circuit breakers, panelboards, outlet boxes, and similar items. Box and tag these items for identification according to type and size.

3.1.8.3 Wiring Ducts or Troughs

Remove and salvage wiring ducts or troughs. Dismantle plug-in ducts and wiring troughs into unit lengths. Remove plug-in or disconnecting devices from the busway and store separately.

3.1.8.4 Conduit and Miscellaneous Items

Salvage conduit except where embedded in concrete or masonry. Consider corroded, bent, or damaged conduit as scrap metal. Sort straight and undamaged lengths of conduit according to size and type. Classify supports, knobs, tubes, cleats, and straps as debris to be removed and disposed.

3.1.9 Items With Unique/Regulated Disposal Requirements

Remove and dispose of items with unique or regulated disposal requirements in the manner dictated by law or in the most environmentally responsible manner.

3.2 DISPOSITION OF MATERIAL

3.2.1 Title to Materials

Except for salvaged items specified in related Sections, and for materials or equipment scheduled for salvage, all materials and equipment removed and not reused or salvaged, shall become the property of the Contractor and shall be removed from Government property. Title to materials resulting from demolition and deconstruction, and materials and equipment to be removed, is vested in the Contractor upon approval by the Contracting Officer of the Contractor's demolition, deconstruction, and removal procedures, and authorization by the Contracting Officer to begin demolition and deconstruction. The Government will not be responsible for the condition or loss of, or damage to, such property after contract award. Showing for sale or selling materials and equipment on site is prohibited.

3.2.2 Reuse of Materials and Equipment

Remove and store materials and equipment to be reused or relocated to prevent damage, and reinstall as the work progresses.

3.2.3 Salvaged Materials and Equipment

Remove materials and equipment that are to be removed by the Contractor and that are to remain the property of the Government, and deliver to a storage site as directed by the Contracting Officer.

a. Salvage items and material to the maximum extent possible.

b. Store all materials salvaged for the Contractor as approved by the Contracting Officer and remove from Government property before completion of the contract. On site sales of salvaged material is prohibited.

c. Remove salvaged items to remain the property of the Government in a manner to prevent damage, and packed or crated to protect the items from damage while in storage or during shipment. Items damaged during removal or storage must be repaired or replaced to match existing items. Properly identify the contents of containers. Deliver the following items reserved as property of the Government to the areas designated by the Contracting Officer.

e. Remove historical items in a manner to prevent damage. Deliver the following historical items to the Government for disposition: Corner stones, contents of corner stones, and document boxes wherever located on the site.

f. Remove and capture all Class I ODS refrigerants in accordance with the Clean Air Act Amendment of 1990, and turn in to the Navy as directed by the Commanding Officer.

3.2.4 Disposal of Ozone Depleting Substance (ODS)

Class I and Class II ODS are defined in Section, 602(a) and (b), of The Clean Air Act. Prevent discharge of Class I and Class II ODS to the atmosphere. Place recovered ODS in cylinders meeting AHRI Guideline K suitable for the type ODS (filled to no more than 80 percent capacity) and provide appropriate labeling. Recovered ODS shall be turned over to the Contracting Officer . Products, equipment and appliances containing ODS in a sealed, self-contained system (e.g. residential refrigerators and window air conditioners) shall be disposed of in accordance with 40 CFR 82. Submit Receipts or bills of lading, as specified. Submit a shipping receipt or bill of lading for all containers of ozone depleting substance (ODS) shipped to the Defense Depot, Richmond, Virginia.

3.2.4.1 Special Instructions

No more than one type of ODS is permitted in each container. A warning/hazardous label shall be applied to the containers in accordance with Department of Transportation regulations. All cylinders including but not limited to fire extinguishers, spheres, or canisters containing an ODS shall have a tag with the following information:

a. Activity name and unit identification code

b. Activity point of contact and phone number

c. Type of ODS and pounds of ODS contained

d. Date of shipment

e. National stock number (for information, call (804) 279-4525).

3.2.5 Transportation Guidance

Ship all ODS containers in accordance with MIL-STD-129, DLA 4145.25 (also referenced one of the following: Army Regulation 700-68, Naval Supply Instruction 4440.128C, Marine Corps Order 10330.2C, and Air Force Regulation 67-12), 49 CFR 173.301, and DOD 4000.25-1-M.

3.2.6 Unsalvageable and Non-Recyclable Material

Dispose of unsalvageable and non-recyclable noncombustible material in the disposal area as instructed by the Contracting Officer. Dispose of unsalvageable and non-recyclable combustible material as instructed by the Contracting Officer.

3.3 CLEANUP

Remove debris and rubbish from building. Remove and transport the debris in a manner that prevents spillage on streets or adjacent areas. Apply local regulations regarding hauling and disposal.

3.4 DISPOSAL OF REMOVED MATERIALS

3.4.1 Regulation of Removed Materials

Dispose of debris, rubbish, scrap, and other nonsalvageable materials resulting from removal operations with all applicable federal, state and local regulations as contractually specified by the Contracting Officer. Storage of removed materials on the project site is prohibited.

3.4.2 Burning on Government Property

Burning of materials removed from demolished and deconstructed structures will not be permitted on Government property .

3.4.3 Removal to Spoil Areas on Government Property

Transport noncombustible materials removed from demolition and deconstruction structures to designated spoil areas on Government property.

3.4.4 Removal from Government Property

Transport waste materials removed from demolished and deconstructed structures, except waste soil, from Government property for legal disposal. Dispose of waste soil as directed.

3.5 REUSE OF SALVAGED ITEMS

Recondition salvaged materials and equipment designated for reuse before installation. Replace items damaged during removal and salvage operations or restore them as necessary to usable condition.

-- End of Section --

SECTION 02 82 16.00 22

ENGINEERING CONTROL OF ASBESTOS CONTAINING MATERIALS (PWD ME)
02/14

PART 1 GENERAL

This specification applies to all Design-Bid-Build and Design-Build projects.

This specification applies to all work completed at the Portsmouth Naval Shipyard. For work completed at all other Facilities, the requirements in Section 02 82 16.00 20 apply.

Transport And Disposal Of Asbestos Materials To A Licensed Disposal Site Will Be By Separate Contract. Contractor Shall Ensure All Asbestos Materials Are Properly Packaged Prior To Placement Into Government Furnished Dumpsters

1.1 REFERENCES

The publications listed below form a part of this specification to the extent referenced. The publications are referred to within the text by the basic designation only.

AMERICAN INDUSTRIAL HYGIENE ASSOCIATION (AIHA)

AIHA Z88.6	(2006) Respiratory Protection - Respiratory Use - Physical Qualifications for Personnel
AIHA Z9.2	(2006) Fundamentals Governing the Design and Operation of Local Exhaust Ventilation Systems

ASTM INTERNATIONAL (ASTM)

ASTM C 732	(2006) Aging Effects of Artificial Weathering on Latex Sealants
ASTM D 1331	(1989; R 2001) Surface and Interfacial Tension of Solutions of Surface-Active Agents
ASTM D 2794	(1993; R 2010) Resistance of Organic Coatings to the Effects of Rapid Deformation (Impact)
ASTM D 522	(1993a; R 2008) Mandrel Bend Test of Attached Organic Coatings
ASTM E 119	(2012) Standard Test Methods for Fire Tests of Building Construction and Materials
ASTM E 1368	(2011) Visual Inspection of Asbestos Abatement Projects

ASTM E 736	(2000; R 2011) Cohesion/Adhesion of Sprayed Fire-Resistive Materials Applied to Structural Members
ASTM E 84	(2012) Standard Test Method for Surface Burning Characteristics of Building Materials
ASTM E 96/E 96M	(2010) Standard Test Methods for Water Vapor Transmission of Materials

U.S. NATIONAL ARCHIVES AND RECORDS ADMINISTRATION (NARA)

29 CFR 1926.103	Respiratory Protection
29 CFR 1926.1101	Asbestos
29 CFR 1926.200	Accident Prevention Signs and Tags
29 CFR 1926.51	Sanitation
29 CFR 1926.59	Hazard Communication
40 CFR 61-SUBPART A	General Provisions
40 CFR 61-SUBPART M	National Emission Standard for Asbestos
40 CFR 763	Asbestos

U.S. NAVAL FACILITIES ENGINEERING COMMAND (NAVFAC)

ND OPNAVINST 5100.23	(2005; Rev G) Navy Occupational Safety and Health (NAVOSH) Program Manual

UNDERWRITERS LABORATORIES (UL)

UL 586	(2009) Standard for High-Efficiency Particulate, Air Filter Units

1.2 State of Maine, Department of Environmental Protection (DEP)

State of Maine Licensing and Certification Program
http://www.mainelegislature.org/legis/statutes/38/title38sec1274.html

06-096 CMR 425 Asbestos Management Regulations,
http://www.maine.gov/sos/cec/rules/06/096/096c425.doc

1.3 DEFINITIONS

1.3.1 ACM

Asbestos Containing Materials.

1.3.2 Amended Water

Water containing a wetting agent or surfactant with a maximum surface tension of 29 dynes per centimeter when tested in accordance with ASTM D 1331.

1.3.3 Area Sampling

Sampling of asbestos fiber concentrations which approximates the concentrations of asbestos in the theoretical breathing zone but is not actually collected in the breathing zone of an employee.

1.3.4 Asbestos

The term asbestos includes chrysotile, amosite, crocidolite, tremolite asbestos, anthophyllite asbestos, and actinolite asbestos and any of these minerals that has been chemically treated or altered. Materials are considered to contain asbestos if the asbestos content of the material is determined to be at least one percent.

1.3.5 Asbestos Control Area

That area where asbestos removal operations are performed which is isolated by physical boundaries which assist in the prevention of the uncontrolled release of asbestos dust, fibers, or debris.

1.3.6 Asbestos Fibers

Those fibers having an aspect ratio of at least 3:1 and longer than 5 micrometers as determined by National Institute for Occupational Safety and Health (NIOSH) Method 7400.

1.3.7 Asbestos Permissible Exposure Limit

0.1 fibers per cubic centimeter of air as an 8-hour time weighted average measured in the breathing zone as defined by 29 CFR 1926.1101 or other Federal legislation having legal jurisdiction for the protection of workers health.

1.3.8 Background

The ambient airborne asbestos concentration in an uncontaminated area as measured prior to any asbestos hazard abatement efforts. Background concentrations for other (contaminated) areas are measured in similar but asbestos free locations.

1.3.9 Contractor

The Contractor is that individual, or entity under contract to the Navy to perform the herein listed work.

1.3.10 Competent Person

A person meeting the requirements for competent person as specified in 29 CFR 1926.1101 including a person capable of identifying existing asbestos hazards in the workplace and selecting the appropriate control strategy for asbestos exposure, who has the authority to take prompt corrective measures to eliminate them, and is specifically trained in a training course which meet the criteria of EPA's Model Accreditation Plan (40 CFR 763) for project designer or supervisor, or its equivalent. The competent person shall have a current State of Maine asbestos contractors or supervisors license.

1.3.11 Encapsulation

The abatement of an asbestos hazard through the appropriate use of chemical encapsulants.

1.3.12 Encapsulants

Specific materials in various forms used to chemically or physically entrap asbestos fibers in various configurations to prevent these fibers from becoming airborne. There are four types of encapsulants as follows which must comply with performance requirements as specified herein.

a. Removal Encapsulant (can be used as a wetting agent)

b. Bridging Encapsulant (used to provide a tough, durable surface coating to asbestos containing material)

c. Penetrating Encapsulant (used to penetrate the asbestos containing material encapsulating all asbestos fibers and preventing fiber release due to routine mechanical damage)

d. Lock-Down Encapsulant (used to seal off or "lock-down" minute asbestos fibers left on surfaces from which asbestos containing material has been removed).

1.3.13 Friable Asbestos Material

One percent asbestos containing material that can be crumbled, pulverized, or reduced to powder by hand pressure when dry.

1.3.14 Glovebag Technique

Those asbestos removal and control techniques put forth in 29 CFR 1926.1101 Appendix G.

1.3.15 HEPA Filter Equipment

High efficiency particulate air (HEPA) filtered vacuum and/or exhaust ventilation equipment with a filter system capable of collecting and retaining asbestos fibers. Filters shall retain 99.97 percent of particles 0.3 microns or larger as indicated in UL 586.

1.3.16 Navy Consultant (NC)

That qualified person employed directly by the Government to monitor, sample, inspect the work or in some other way advise the Contracting Officer. The NC is normally a private consultant, but can be an employee of the Government.

1.3.17 Negative Pressure Enclosure (NPE)

That engineering control technique described as a negative pressure enclosure in 29 CFR 1926.1101.

1.3.18 Nonfriable Asbestos Material

Material that contains asbestos in which the fibers have been immobilized by a bonding agent, coating, binder, or other material so that the asbestos is well bound and will not normally release asbestos fibers

during any appropriate use, handling, storage or transportation. It is understood that asbestos fibers may be released under other conditions such as demolition, removal, or mishap.

1.3.19 Personal Sampling

Air sampling which is performed to determine asbestos fiber concentrations within the breathing zone of a specific employee, as performed in accordance with 29 CFR 1926.1101.

1.3.20 Private Qualified Person (PQP)

That qualified person hired by the Contractor to perform the herein listed tasks.

1.3.21 Qualified Person (QP)

A Registered Architect, Professional Engineer, Certified Industrial Hygienist, consultant or other qualified person who has successfully completed training and is therefore accredited under a legitimate State Model Accreditation Plan as described in 40 CFR 763 as a Building Inspector, Contractor/Supervisor Abatement Worker, and Asbestos Project Designer; and has successfully completed the National Institute of Occupational Safety and Health (NIOSH) 582 course "Sampling and Evaluating Airborne Asbestos Dust" or equivalent. The QP must be qualified to perform visual inspections as indicated in ASTM E 1368. The QP shall be appropriately licensed in the State of Maine.

1.3.22 TEM

Refers to Transmission Electron Microscopy.

1.3.23 Time Weighted Average (TWA)

The TWA is an 8-hour time weighted average airborne concentration of asbestos fibers.

1.3.24 Wetting Agent

A chemical added to water to reduce the water's surface tension thereby increasing the water's ability to soak into the material to which it is applied. An equivalent wetting agent must have a surface tension of at most 29 dynes per centimeter when tested in accordance with ASTM D 1331.

1.4 REQUIREMENTS

1.4.1 Description of Work

The work covered by this section includes the handling of friable and non friable materials containing asbestos which are encountered during removal operations in areas as indicated on drawings or as specified. Refer to the report located at the end of this section. The work performed shall include the procedures and equipment required to protect workers and occupants of the building(s) or area(s) from contact with airborne asbestos fibers. Provide full containment, glovebag, or outdoor techniques as specified in approved "Asbestos Removal Work Plan". In addition to detailed requirements of this specification, comply with laws, ordinances, rules, and regulations of Federal, State, regional, and local authorities regarding handling, storing and transporting of asbestos waste

materials. Comply with the applicable requirements of the current issue of 29 CFR 1926.1101 and 40 CFR 61, Subparts A and M, State of Maine P.L. 448, State of Maine Asbestos Management Regulation 06-096 CMR 425, and the requirements specified herein for asbestos abatement and other asbestos work. Submit matters of interpretation of standards to the appropriate agency for resolution before starting the work.

1.4.1.1 Wallboard/Joint Compound

Both composite samples of the wallboard and discrete samples of the components (wallboard and joint compound) have been tested and results are attached.

1.4.2 Medical Requirements

Provide medical requirements including but not limited to medical surveillance and medical record keeping as listed in 29 CFR 1926.1101.

1.4.2.1 Medical Examinations

Before exposure to airborne asbestos fibers, provide workers with a comprehensive medical examination as required by 29 CFR 1926.1101 or other pertinent State or local directives. This requirement must have been satisfied within the 12 months prior to the start of work on this contract. The same medical examination shall be given on an annual basis to employees engaged in an occupation involving asbestos and within 30 calendar days before or after the termination of employment in such occupation. Specifically identify x-ray films of asbestos workers to the consulting radiologist and mark medical record jackets with the word "ASBESTOS."

1.4.2.2 Medical Records

Maintain complete and accurate records of employees' medical examinations, medical records, and exposure data for a period of indefinite time after termination of employment and make records of the required medical examinations and exposure data available for inspection and copying to: The Assistant Secretary of Labor for Occupational Safety and Health (OSHA), or authorized representatives of them, and an employee's physician upon the request of the employee or former employee.

1.4.3 Employee Training

Submit certificates, prior to the start of work but after the main abatement submittal, signed by each employee indicating that the employee has received training in the proper handling of materials and wastes that contain asbestos in accordance with 40 CFR 763; understands the health implications and risks involved, including the illnesses possible from exposure to airborne asbestos fibers; understands the use and limits of the respiratory equipment to be used; and understands the results of monitoring of airborne quantities of asbestos as related to health and respiratory equipment as indicated in 29 CFR 1926.1101 on an initial and annual basis. Certificates shall be organized by individual worker, not grouped by type of certification. Post appropriate evidence of compliance with the training requirements of 40 CFR 763. Train all personnel involved in the asbestos control work in accordance with United States Environmental Protection Agency (USEPA) Asbestos Hazard Emergency Response Act (AHERA) training criteria or State training criteria whichever is more

stringent. The Contractor shall document the training by providing: dates of training, training entity, course outline, names of instructors, and qualifications of instructors upon request by the Contracting Officer. Furnish each employee with respirator training and fit testing administered by the PQP as required by 29 CFR 1926.1101. Fully cover engineering and other hazard control techniques and procedures. All asbestos workers shall have a current State of Maine asbestos worker's license.

1.4.4 Permits and Notifications

Obtain necessary permits in conjunction with asbestos removal, encapsulation, hauling, and disposition, and furnish notification of such actions required by Federal, State, regional, and local authorities prior to the start of work. Notify the State's environmental protection agency. Notify the State of Maine environmental protection agency and the Contracting Officer in writing 20 working days prior to commencement of work in accordance with 40 CFR 61-SUBPART M. Notify the Contracting Officer and other appropriate Government agencies in writing 20 working days prior to the start of asbestos work as indicated in applicable laws, ordinances, criteria, rules, and regulations. Submit copies of all Notifications to the Contracting Officer. Notify the Shipyard fire department 3 days prior to removing fire-proofing material from the building including notice that the material contains asbestos.

1.4.5 Environment, Safety and Health Compliance

In addition to detailed requirements of this specification, comply with those applicable laws, ordinances, criteria, rules, and regulations of Federal, State, regional, and local authorities regarding handling, storing, transporting, and disposing of asbestos waste materials. Comply with the applicable requirements of the current issue of 29 CFR 1926.1101, 40 CFR 61-SUBPART A, 40 CFR 61-SUBPART M, and ND OPNAVINST 5100.23. Submit matters of interpretation of standards to the appropriate administrative agency for resolution before starting the work. Where the requirements of this specification, applicable laws, rules, criteria, ordinances, regulations, and referenced documents vary, the most stringent requirement as defined by the Government shall apply.

1.4.6 Respiratory Protection Program

Establish and implement a respirator program as required by AIHA Z88.6, 29 CFR 1926.1101, and 29 CFR 1926.103. Submit a written description of the program to the Contracting Officer. Submit a written program manual or operating procedure including methods of compliance with regulatory statutes.

1.4.6.1 Respirator Program Records

Submit records of the respirator program as required by AIHA Z88.6, 29 CFR 1926.103, and 29 CFR 1926.1101.

1.4.7 Asbestos Hazard Control Supervisor

The Contractor shall be represented on site by a supervisor, trained using the model Contractor accreditation plan as indicated in the Federal statutes for all portions of the herein listed work.

1.4.8 Hazard Communication

Adhere to all parts of 29 CFR 1926.59 and provide the Contracting Officer with a copy of the Material Safety Data Sheets (MSDS) for all materials brought to the site.

1.4.9 Asbestos Hazard Abatement Plan

Submit a detailed plan of the safety precautions such as lockout, tagout, tryout, fall protection, and confined space entry procedures and equipment and work procedures to be used materials containing asbestos. The plan, not to be combined with other hazard abatement plans, shall be prepared, signed, and sealed by the PQP. Provide a Table of Contents for each abatement submittal, which shall follow the sequence of requirements in the contract. Such plan shall include, but not be limited to, the precise personal protective equipment to be used including, but not limited to, respiratory protection, type of whole-body protection, operations and quality control plan, the location of asbestos control areas including clean and dirty areas, buffer zones, showers, storage areas, change rooms, interface of trades involved in the construction, sequencing of asbestos related work, type of wetting agent and asbestos sealer to be used, locations of local exhaust equipment, planned air monitoring strategies, and a detailed description of the method to be employed in order to control environmental pollution. The plan shall also include both fire and medical emergency response plans. The Asbestos Hazard Abatement Plan must be approved in writing prior to starting any asbestos work. The Contractor, Asbestos Hazard Control Supervisor, and PQP shall meet with the Contracting Officer prior to beginning work, to discuss in detail the Asbestos Hazard Abatement Plan, including work procedures and safety precautions. Once approved by the Contracting Officer, the plan will be enforced as if an addition to the specification. Any changes required in the specification as a result of the plan shall be identified specifically in the plan to allow for free discussion and approval by the Contracting Officer prior to starting work.

1.4.10 Testing Laboratory

Submit the name, address, and telephone number of each testing laboratory selected for the sampling, analysis, and reporting of airborne concentrations of asbestos fibers along with certification that each laboratory is American Industrial Hygiene Association (AIHA) accredited and that persons counting the samples have been judged proficient by current inclusion on the AIHA Asbestos Analysis Registry (AAR) and successful participation of the laboratory in the Proficiency Analytical Testing (PAT) Program. Where analysis to determine asbestos content in bulk materials or transmission electron microscopy is required, submit evidence that the laboratory is accredited by the National Institute of Science and Technology (NIST) under National Voluntary Laboratory Accreditation Program (NVLAP) for asbestos analysis. The testing laboratory firm shall be independent of the asbestos contractor and shall have no employee or employer relationship which could constitute a conflict of interest.

1.4.11 Landfill Approval

Landfill Approval is not required as Portsmouth Naval Shipyard takes responsibility for disposal of all asbestos waste generated on the Shipyard.

1.4.12 Medical Certification

Provide a written certification for each worker and supervisor, signed by a licensed physician indicating that the worker and supervisor has met or exceeded all of the medical prerequisites listed herein and in 29 CFR 1926.1101 and 29 CFR 1926.103 as prescribed by law. Submit certificates prior to the start of work but after the main abatement submittal.

1.5 SUBMITTALS

Government approval is required for submittals with a "G" designation; submittals not having a "G" designation are for Contractor Quality Control approval. Submit the following in accordance with Section 01 33 00 SUBMITTAL PROCEDURES for Design-Bid-Build projects:

SD-03 Product Data

Local exhaust equipment; G

Vacuums; G

Respirators; G

Amended water; G

Glovebags; G

Material Safety Data Sheets (MSDS) for all materials proposed for transport to the project site; G

Encapsulants; G

SD-06 Test Reports

Air sampling results; G

Asbestos quantity report; G

Clearance sampling; G

SD-07 Certificates

Asbestos hazard abatement plan; G

Testing laboratory; G

Private qualified person documentation; G

Contractor's license; G

Competent person documentation; G

Worker's license; G

Employee training; G

Medical certification requirements; G

Respiratory Protection Program; G

Water filtration equipment; G

Ventilation systems; G

Other equipment used to contain airborne asbestos fibers; G

Chemical Encapsulants sealers; G

Notifications; G

Show compliance with AIHA Z9.2 by providing manufacturers' certifications.

SD-11 Closeout Submittals

Notifications; G

Rental equipment; G

Respirator program records; G

Permits; G

1.6 QUALITY ASSURANCE

1.6.1 Private Qualified Person Documentation

Submit the name, address, and telephone number of the Private Qualified Person (PQP) selected to prepare the Asbestos Hazard Abatement Plan, direct monitoring and training, and documented evidence that the PQP has successfully completed training in and is accredited and where required is certified as, a Building Inspector, Contractor/Supervisor Abatement Worker, and Asbestos Project Designer as described by 40 CFR 763 and has successfully completed the National Institute of Occupational Safety and Health (NIOSH) 582 course "Sampling and Evaluating Airborne Asbestos Dust" or equivalent. The PQP shall be appropriately licensed in the State of Maine. The PQP and the asbestos contractor shall not have an employee/employer relationship or financial relationship which could constitute a conflict of interest. The PQP shall be a first tier subcontractor.

1.6.2 Competent Person Documentation

Submit training certification and a current State of Maine Asbestos Contractor's and Supervisor's License.

1.6.3 Worker's License

Submit documentation that requires all workers have a current State of Maine Asbestos Workers License.

1.6.4 Contractor's License

Contractor shall have current Maine asbestos contractor's license. Submit a copy of the asbestos contractor's license issued by the State of Maine.

1.6.5 Air Sampling Results

Complete fiber counting and provide results to the PQP for review within 16 hours of the "time off" of the sample pump. Notify the Contracting Officer immediately of any airborne levels of asbestos fibers in excess of the acceptable limits. Submit sampling results to the Contracting Officer and the affected Contractor employees where required by law within 3 working days, signed by the testing laboratory employee performing air sampling, the employee that analyzed the sample, and the PQP. Notify the Contractor and the Contracting Officer immediately of any variance in the pressure differential which could cause adjacent unsealed areas to have asbestos fiber concentrations in excess of 0.010 fibers per cubic centimeter or background whichever is higher. In no circumstance shall levels exceed 0.1 fibers per cubic centimeter.

1.6.6 Pressure Differential Recordings for Local Exhaust System

Provide a local exhaust system that creates a negative pressure of at least 0.02 inches of water relative to the pressure external to the enclosure and operate it continuously, 24 hours a day, until the temporary enclosure of the asbestos control area is removed. Submit pressure differential recordings for each work day to the PQP for review and to the Contracting Officer within 24 hours from the end of each work day.

1.7 EQUIPMENT

1.7.1 Rental Equipment

Provide a copy of the written notification to the rental company concerning the intended use of the equipment and the possibility of asbestos contamination of the equipment.

PART 2 PRODUCTS

2.1 ENCAPSULANTS

Shall conform to current USEPA requirements, shall contain no toxic or hazardous substances as defined in 29 CFR 1926.59, and shall conform to the following performance requirements.

2.1.1 Removal Encapsulants

Requirement	Test Standard
Flame Spread - 25, Smoke Emission - 50	ASTM E 84
Life Expectancy - 20 years	ASTM C 732 Accelerated Aging Test
Permeability - Minimum 0.4 perms	ASTM E 96/E 96M
Fire Resistance - Negligible affect on fire resistance rating over 3 hour test (Classified by UL for use over fibrous and cementitious sprayed fireproofing)	ASTM E 119
Impact Resistance - Minimum 43 in/lb	ASTM D 2794 Gardner Impact Test

Requirement	Test Standard
Flexibility - no rupture or cracking	ASTM D 522 Mandrel Bend Test

2.1.2 Bridging Encapsulant

Requirement	Test Standard
Flame Spread - 25, Smoke Emission - 50	ASTM E 84
Life Expectancy - 20 years	ASTM C 732 Accelerated Aging Test
Permeability - Minimum 0.4 perms	ASTM E 96/E 96M
Fire Resistance - Negligible affect on fire resistance rating over 3 hour test (Classified by UL for use over fibrous and cementitious sprayed fireproofing)	ASTM E 119
Impact Resistance - Minimum 43 in/lb	ASTM D 2794 Gardner Impact Test
Flexibility - no rupture or cracking	ASTM D 522 Mandrel Bend Test

2.1.3 Penetrating Encapsulant

Requirement	Test Standard
Flame Spread - 25, Smoke Emission - 50	ASTM E 84
Life Expectancy - 20 years	ASTM C 732 Accelerated Aging Test
Permeability - Minimum 0.4 perms	ASTM E 96/E 96M
Cohesion/Adhesion Test - 50 pounds of force/foot	ASTM E 736
Fire Resistance - Negligible affect on fire resistance rating over 3 hour test (Classified by UL for use over fibrous and cementitious sprayed fireproofing)	ASTM E 119
Impact Resistance - Minimum 43 in/lb	ASTM D 2794 Gardner Impact Test
Flexibility - no rupture or cracking	ASTM D 522 Mandrel Bend Test

2.1.4 Lock-down Encapsulant

Requirement	Test Standard
Flame Spread: 25, Smoke Emission - 50	ASTM E 84

Requirement	Test Standard
Life Expectancy: 20 years	ASTM C 732 Accelerated Aging Test
Permeability: Minimum 0.4 perms	ASTM E 96/E 96M
Cohesion/Adhesion Test - 50 pounds of force/foot	ASTM E 119
Fire Resistance: Negligible affect on fire resistance rating over 3 hour test (Tested with fireproofing over encapsulant applied directly to steel member)	ASTM E 119
Impact Resistance - Minimum 43 in/lb	ASTM D 2794 Gardner Impact Test
Flexibility - no rupture or cracking	ASTM D 522 Mandrel Bend Test
Bond Strength: 100 pounds of force/foot (Tests compatibility with cementitious and fibrous fireproofing)	ASTM E 736

PART 3 EXECUTION

3.1 EQUIPMENT

At all times, provide the Contracting Officer or the Contracting Officer's Representative, with at least two complete sets of personal protective equipment, as required for entry to and inspection of the asbestos control area. Provide equivalent training to the Contracting Officer or a designated representative as provided to Contractor employees in the use of the required personal protective equipment. Provide manufacturer's certificate of compliance for all equipment used to contain airborne asbestos fibers.

3.1.1 Respirators

Select respirators from those approved by the National Institute for Occupational Safety and Health (NIOSH), Department of Health and Human Services.

3.1.1.1 Respirators for Handling Asbestos

Provide personnel engaged in pre-cleaning, cleanup, handling, encapsulation removal and demolition of asbestos materials with respiratory protection as indicated in 29 CFR 1926.1101 and 29 CFR 1926.103.

3.1.2 Exterior Whole Body Protection

3.1.2.1 Outer Protective Clothing

Provide personnel exposed to asbestos with disposable "non-breathable," whole body outer protective clothing, head coverings, gloves, and foot coverings. Provide disposable plastic or rubber gloves to protect hands. Cloth gloves may be worn inside the plastic or rubber gloves for comfort, but shall not be used alone. Make sleeves secure at the wrists, make foot coverings secure at the ankles, and make clothing secure at the neck by the use of tape.

3.1.2.2 Work Clothing

Provide cloth work clothes for wear under the outer protective clothing and foot coverings and either dispose of or properly decontaminate them as recommended by the after each use.

3.1.2.3 Personal Decontamination Unit

Provide a temporary, negative pressure unit with a separate decontamination locker room and clean locker room with a shower that complies with 29 CFR 1926.51(f)(4)(ii) through (V) in between for personnel required to wear whole body protective clothing. Provide two separate lockers for each asbestos worker, one in each locker room. Keep street clothing and street shoes in the clean locker. HEPA vacuum and remove asbestos contaminated disposable protective clothing while still wearing respirators at the boundary of the asbestos work area and seal in impermeable bags or containers for disposal. HEPA vacuum and remove asbestos contaminated reusable protective clothing while still wearing respirators at the boundary of the asbestos work area, seal in two impermeable bags, label outer bag as asbestos contaminated waste, and transport for decontamination. Do not wear work clothing between home and work. Locate showers between the decontamination locker room and the clean locker room and require that all employees shower before changing into street clothes. Collect used shower water and filter with approved water filtration equipment to remove asbestos contamination. Dispose of filters and residue as asbestos waste. Discharge clean water to the sanitary system. Dispose of asbestos contaminated work clothing as asbestos contaminated waste. Decontamination units shall be physically attached to the asbestos control area. Build both a personnel decontamination unit and an equipment decontamination unit onto and integral with each asbestos control area.

3.1.2.4 Eye Protection

Provide goggles to personnel engaged in asbestos abatement operations when the use of a full face respirator is not required.

3.1.3 Warning Signs and Labels

Provide warning signs at all approaches to asbestos control areas. Locate signs at such a distance that personnel may read the sign and take the necessary protective steps required before entering the area. Provide labels and affix to all asbestos materials, scrap, waste, debris, and other products contaminated with asbestos.

3.1.3.1 Warning Sign

Provide vertical format conforming to 29 CFR 1926.200, and 29 CFR 1926.1101 minimum 20 by 14 inches displaying the following legend in the lower panel:

Legend	Notation
Danger	one inch Sans Serif Gothic or Block
Asbestos	one inch Sans Serif Gothic or Block

Legend	Notation
Cancer and Lung Disease Hazard	1/4 inch Sans Serif Gothic or Block
Authorized Personnel Only	1/4 inch Gothic
Respirators and Protective Clothing are Required in this Area	1/4 inch Gothic

Spacing between lines shall be at least equal to the height of the upper of any two lines.

3.1.3.2 Warning Labels

Provide labels conforming to 29 CFR 1926.1101 of sufficient size to be clearly legible, displaying the following legend:

DANGER

CONTAINS ASBESTOS FIBERS

AVOID CREATING DUST

CANCER AND LUNG DISEASE HAZARD

BREATHING ASBESTOS DUST MAY
CAUSE SERIOUS BODILY HARM

3.1.4 Local Exhaust System

Provide a local exhaust system (i.e., negative air machines - NAMs) in the asbestos control area in accordance with AIHA Z9.2 and 29 CFR 1926.1101 that will provide at least four air changes per hour inside of the negative pressure enclosure. Local exhaust equipment shall be operated 24 hours per day, until the asbestos control area is removed and shall be leak proof to the filter and equipped with HEPA filters. Maintain a minimum pressure differential in the control area of minus 0.02 inch of water column relative to adjacent, unsealed areas. Provide continuous 24-hour per day monitoring of the pressure differential with a pressure differential automatic recording instrument. In no case shall the building ventilation system be used as the local exhaust system for the asbestos control area. Filters on exhaust equipment shall conform to AIHA Z9.2 and UL 586. The local exhaust system shall terminate out of doors and remote from any public access or ventilation system intakes. Where outside access for venting the NAMs is not available or not practical, and inside-building venting is necessary, prior to use of the inside-building venting system, the system shall be tested and confirmed in proper working order to ensure the efficacy of the equipment prior to commencement of removals of asbestos containing material.

3.1.5 Tools

Vacuums shall be leak proof to the filter and equipped with HEPA filters. Filters on vacuums shall conform to AIHA Z9.2 and UL 586. Do not use power tools to remove asbestos containing materials unless the tool is

equipped with effective, integral HEPA filtered exhaust ventilation systems. Remove all residual asbestos from reusable tools prior to storage or reuse.

3.1.6 Rental Equipment

If rental equipment is to be used, furnish written notification to the rental agency concerning the intended use of the equipment and the possibility of asbestos contamination of the equipment.

3.1.7 Glovebags

The use of multiple glovebags in excess of 21 linear feet of ACM or 9 square feet of ACM is strictly prohibited without the prior written approval of the State of Maine, DEP.

Submit written manufacturers proof that glovebags will not break down under expected temperatures and conditions.

3.2 WORK PROCEDURE

Perform asbestos related work in accordance with 29 CFR 1926.1101, 40 CFR 61-SUBPART M, and as specified herein. Use wet removal procedures and negative pressure enclosure techniques. Personnel shall wear and utilize protective clothing and equipment as specified herein. Eating, smoking, drinking, chewing gum, tobacco, or applying cosmetics shall not be permitted in the asbestos work or control areas. Personnel of other trades not engaged in the removal or demolition of asbestos containing material shall not be exposed at any time to airborne concentrations of asbestos unless all the personnel protection and training provisions of this specification are complied with by the trade personnel. Shut down the building heating, ventilating, and air conditioning system, cap the openings to the system, and provide temporary heating, and ventilation, prior to the commencement of asbestos work. Disconnect electrical service when encapsulation or wet removal is performed and provide temporary electrical service with verifiable ground fault circuit interrupter (GFCI) protection prior to the use of any water. If an asbestos fiber release or spill occurs stop work immediately, correct the condition to the satisfaction of the Contracting Officer including clearance sampling, prior to resumption of work.

3.2.1 Protection of Existing Work to Remain

Perform work without damage or contamination of adjacent work. Where such work is damaged or contaminated as verified by the Contracting Officer using visual inspection or sample analysis, it shall be restored to its original condition or decontaminated by the Contractor at no expense to the Government as deemed appropriate by the Contracting Officer. This includes inadvertent spill of dirt, dust, or debris in which it is reasonable to conclude that asbestos may exist. When these spills occur, stop work immediately. Then clean up the spill. When satisfactory visual inspection and air sampling results are obtained from the PQP work may proceed at the discretion of the Contracting Officer.

3.2.2 Furnishings

Furniture and equipment will be removed from the area of work by the Government to the greatest extent possible before asbestos work begins.

Furniture and equipment that remains in the building shall be covered and

sealed with 6-mil plastic sheet or removed from the work area and stored in a location on site approved by the Contracting Officer.

Reinstall furnishings and equipment after the completion of asbestos work.

3.2.3 Precleaning

Wet wipe and HEPA vacuum all surfaces potentially contaminated with asbestos prior to establishment of an enclosure.

3.2.4 Asbestos Control Area Requirements

3.2.4.1 Negative Pressure Enclosure

Block and seal openings in areas where the release of airborne asbestos fibers can be expected. Establish an asbestos negative pressure enclosure with the use of curtains, portable partitions, or other enclosures in order to prevent the escape of asbestos fibers from the contaminated asbestos work area. Negative pressure enclosure development shall include protective covering of uncontaminated walls, and ceilings with a continuous membrane of two layers of minimum 6-mil plastic sheet sealed with tape to prevent water or other damage. Provide two layers of 6-mil plastic sheet over floors and extend a minimum of 12 inches up walls. Seal all joints with tape. Provide local exhaust system in the asbestos control area. Openings will be allowed in enclosures of asbestos control areas for personnel and equipment entry and exit, the supply and exhaust of air for the local exhaust system and the removal of properly containerized asbestos containing materials. Replace local exhaust system filters as required to maintain the efficiency of the system.

3.2.4.2 Glovebag

Where the construction of a negative pressure enclosure is infeasible for , use alternate techniques as indicated in 29 CFR 1926.1101. Establish designated limits for the asbestos regulated area with the use of rope or other continuous barriers, and maintain all other requirements for asbestos control areas. The PQP shall conduct personal samples of each worker engaged in asbestos handling, removal, and other associated work throughout the duration of the project. If the quantity of airborne asbestos fibers monitored at the breathing zone of the workers at any time exceeds background or 0.010 fibers per cubic centimeter whichever is greater, stop work, evacuate personnel in adjacent areas or provide personnel with approved protective equipment at the discretion of the Contracting Officer. This sampling may be duplicated by the Government at the discretion of the Contracting Officer. If the air sampling results obtained by the Government differs from those obtained by the Contractor, the Government will determine which results predominate. If adjacent areas are contaminated as determined by the Contracting Officer, clean the contaminated areas, monitor, and visually inspect the area as specified herein.

3.2.5 Removal Procedures

Wet asbestos material with a fine spray during removal, cutting, or other handling so as to reduce the emission of airborne fibers. Remove material and immediately place in 6 mil plastic disposal bags. Remove asbestos containing material in a gradual manner, with continuous application of the amended water or wetting agent in such a manner that no asbestos material is disturbed prior to being adequately wetted. Where unusual

circumstances prohibit the use of 6 mil plastic bags, submit an alternate proposal for containment of asbestos fibers to the Contracting Officer for approval. For example, in the case where both piping and insulation are to be removed, the Contractor may elect to wet the insulation, wrap the pipes and insulation in plastic and remove the pipe by sections. Asbestos containing material shall be containerized while wet. At no time shall asbestos material be allowed to accumulate or become dry. Lower and otherwise handle asbestos containing material as indicated in 40 CFR 61-SUBPART M.

3.2.5.1 Sealing Contaminated Items Designated for Disposal

Remove contaminated architectural, mechanical, and electrical appurtenances such as venetian blinds, full-height partitions, carpeting, duct work, pipes and fittings, radiators, light fixtures, conduit, panels, and other contaminated items designated for removal by completely coating the items with an asbestos lock-down encapsulant at the demolition site before removing the items from the asbestos control area. These items need not be vacuumed. The asbestos lock-down encapsulant shall be tinted a contrasting color. It shall be spray-applied by airless method. Thoroughness of sealing operation shall be visually gauged by the extent of colored coating on exposed surfaces. Lock-down encapsulants shall comply with the performance requirements specified herein.

3.2.5.2 Exposed Pipe Insulation Edges

Contain edges of asbestos insulation to remain that are exposed by a removal operation. Wet and cut the rough ends true and square with sharp tools and then encapsulate the edges with a 1/4 inch thick layer of non-asbestos containing insulating cement troweled to a smooth hard finish. When cement is dry, lag the end with a layer of non-asbestos lagging cloth, overlapping the existing ends by at least 4 inches. When insulating cement and cloth is an impractical method of sealing a raw edge of asbestos, take appropriate steps to seal the raw edges as approved by the Contracting Officer.

3.2.6 Air Sampling

Sampling of airborne concentrations of asbestos fibers shall be performed in accordance with 29 CFR 1926.1101 and as specified herein. Sampling performed in accordance with 29 CFR 1926.1101 shall be performed by the PQP. Sampling performed for environmental and quality control reasons shall be performed by the PQP. Unless otherwise specified, use NIOSH Method 7400 for sampling and analysis. Monitoring may be duplicated by the Government at the discretion of the Contracting Officer. If the air sampling results obtained by the Government differ from those results obtained by the Contractor, the Government will determine which results predominate.

3.2.6.1 Sampling Prior to Asbestos Work

Provide area air sampling and establish the baseline one day prior to the masking and sealing operations for each demolitionor removal site. Establish the background by performing area sampling in similar but uncontaminated sites in the building.

3.2.6.2 Sampling During Asbestos Work

The PQP shall provide personal and area sampling as indicated in

29 CFR 1926.1101 and governing environmental regulations. In addition, provided the same type of work is being performed, provide area sampling at least once every work shift close to the work inside the enclosure, outside the clean room entrance to the enclosure, and at the exhaust opening of the local exhaust system. If sampling outside the enclosure shows airborne levels have exceeded background or 0.010 fibers per cubic centimeter, whichever is greater, stop all work, correct the condition(s) causing the increase, and notify the Contracting Officer immediately. Where alternate methods are used, perform personal and area air sampling at locations and frequencies that will accurately characterize the evolving airborne asbestos levels.

3.2.6.3 Sampling After Final Clean-Up (Clearance Sampling)

Provide area sampling of asbestos fibers and establish an airborne asbestos concentration of less than 0.010 fibers per cubic centimeter after final clean-up but before removal of the enclosure or the asbestos work control area. After final cleanup and the asbestos control area is dry but prior to clearance sampling, the PQP shall perform a visual inspection in accordance with ASTM E 1368 to ensure that the asbestos control and work area is free of any accumulations of dirt, dust, or debris. Prepare a written report signed and dated by the PQP documenting that the asbestos control area is free of dust, dirt, and debris and all waste has been removed. The asbestos fiber counts from these samples shall be less than 0.010 fibers per cubic centimeter or be not greater than the background, whichever is greater. Should any of the final samples indicate a higher value, the Contractor shall take appropriate actions to re-clean the area and shall repeat the sampling and analysis at the Contractor's expense.

3.2.7 Lock-Down

Prior to removal of plastic barriers and after pre-clearance clean up of gross contamination, the PQP shall conduct a visual inspection of all areas affected by the removal or encapsulation in accordance with ASTM E 1368. Inspect for any visible fibers, and to ensure that encapsulants were applied evenly and appropriately. If required a post removal (lock-down) encapsulant shall then be spray applied to ceiling, walls, floors and other areas exposed in the removal area. The exposed area shall include but not be limited to plastic barriers, furnishings and articles to be discarded as well as dirty change room, air locks for bag removal and decontamination chambers.

3.2.8 Site Inspection

While performing asbestos engineering control work, the Contractor shall be subject to on-site inspection by the Contracting Officer who may be assisted by or represented by safety or industrial hygiene personnel. If the work is found to be in violation of this specification, the Contracting Officer or his representative will issue a stop work order to be in effect immediately and until the violation is resolved. All related costs including standby time required to resolve the violation shall be at the Contractor's expense.

3.3 CLEAN-UP AND DISPOSAL

3.3.1 Housekeeping

Essential parts of asbestos dust control are housekeeping and clean-up procedures. Maintain surfaces of the asbestos control area free of accumulations of asbestos fibers. Give meticulous attention to restricting the spread of dust and debris; keep waste from being distributed over the general area. Use HEPA filtered vacuum cleaners. DO NOT BLOW DOWN THE SPACE WITH COMPRESSED AIR. When asbestos removal is complete, all asbestos waste is removed from the work-site, and final clean-up is completed, the Contracting Officer will attest that the area is safe before the signs can be removed. After final clean-up and acceptable airborne concentrations are attained but before the HEPA unit is turned off and the enclosure removed, remove all pre-filters on the building HVAC system and provide new pre-filters. Dispose of filters as asbestos contaminated materials. Reestablish HVAC mechanical, and electrical systems in proper working order. The Contracting Officer will visually inspect all surfaces within the enclosure for residual material or accumulated dust or debris. The Contractor shall re-clean all areas showing dust or residual materials. If re-cleaning is required, air sample and establish an acceptable asbestos airborne concentration after re-cleaning. The Contracting Officer must agree that the area is safe in writing before unrestricted entry will be permitted. The Government shall have the option to perform monitoring to determine if the areas are safe before entry is permitted.

3.3.2 Title to Materials

The Portsmouth Naval Shipyard Hazardous Waste Facility takes title and is responsible for all asbestos waste disposal.

3.3.3 Disposal of Asbestos

3.3.3.1 Procedure for Disposal

Collect asbestos waste, asbestos contaminated water, scrap, debris, bags, containers, equipment, and asbestos contaminated clothing which may produce airborne concentrations of asbestos fibers and place in sealed fiber-proof, waterproof, non-returnable containers (e.g. double plastic bags 6 mils thick, cartons, drums or cans). Wastes within the containers must be adequately wet in accordance with 40 CFR 61-SUBPART M. Affix a warning and Department of Transportation (DOT) label to each container including the bags or use at least 6 mils thick bags with the approved warnings and DOT labeling preprinted on the bag.

The Contractor shall carefully remove material and immediately place it in approved asbestos disposal bags/containers. If the bags/containers are not premarked, a Contractor furnished caution label shall be permanently attached to the bags/containers. The Contractor shall also furnish and affix a label permanently attached to the bags which provides the following information:

* Abatement Contractor Name
* Construction Contract Number
* Building Number
* Portsmouth Naval Shipyard, Kittery, Maine
* Date

Transport And Disposal Of Asbestos Materials To A Licensed Disposal Site Will Be By Separate Contract. Contractor Shall Ensure All Asbestos Materials Are Properly Packaged Prior To Placement Into Government Furnished Dumpsters.

3.3.3.2 Asbestos Quantity Report

Direct the PQP to record and report, to the Contracting Officer, the amount of asbestos containing material removed and released for disposal. Deliver the report for the previous day at the beginning of each day shift with amounts of material removed during the previous day reported in linear feet or square feet as described initially in this specification and in cubic feet for the amount of asbestos containing material released for Government disposal.

-- End of Section --

SECTION 02 83 13.00 22

LEAD IN CONSTRUCTION (PWD ME)
03/14

PART 1 GENERAL

This specification applies to all Design-Bid-Build and Design-Build projects.

This specification applies to all work completed at the Portsmouth Naval Shipyard. For work completed at all other Facilities, the requirements in Section 02 83 13.00 20 apply.

Transport And Disposal Of Lead Materials To A Licensed Disposal Site Will Be By Separate Contract. Contractor Shall Ensure All Lead Materials Are Properly Packaged Prior To Placement Into Government Furnished Dumpsters

1.1 REFERENCES

The publications listed below form a part of this specification to the extent referenced. The publications are referred to within the text by the basic designation only.

AMERICAN INDUSTRIAL HYGIENE ASSOCIATION (AIHA)

AIHA Z88.6	(2006) Respiratory Protection - Respiratory Use - Physical Qualifications for Personnel

U.S. DEPARTMENT OF HOUSING AND URBAN DEVELOPMENT (HUD)

HUD 6780	(1995; Errata Aug 1996;Rev Ch. 7 - 1997) Guidelines for the Evaluation and Control of Lead-Based Paint Hazards in Housing

U.S. NATIONAL ARCHIVES AND RECORDS ADMINISTRATION (NARA)

29 CFR 1926.103	Respiratory Protection
29 CFR 1926.21	Safety Training and Education
29 CFR 1926.33	Access to Employee Exposure and Medical Records
29 CFR 1926.55	Gases, Vapors, Fumes, Dusts, and Mists
29 CFR 1926.59	Hazard Communication
29 CFR 1926.62	Lead
29 CFR 1926.65	Hazardous Waste Operations and Emergency Response
40 CFR 261	Identification and Listing of Hazardous Waste
40 CFR 745	Lead-Based Paint Poisoning Prevention in

Certain Residential Structures

UNDERWRITERS LABORATORIES (UL)

UL 586 (2009) Standard for High-Efficiency Particulate, Air Filter Units

1.1.1 STATE OF MAINE REGULATIONS

The following STATE OF MAINE REGULATIONS regulations are available on request to the Contracting Officer or at www.maine.gov/sos/cec/rules/06/096/096c851.doc

1.1.2 PORTSMOUTH NAVAL SHIPYARD REGULATIONS

INSTRUCTIONS

1. 5090.6D Solid Waste Plan 11/08

2. 5090.30 Hazardous Waste Generator Standards 4/05

These instructions are available upon request to the Contracting Officer.

1.2 DEFINITIONS

1.2.1 Action Level

Employee exposure, without regard to use of respirators, to an airborne concentration of lead of 30 micrograms per cubic meter of air averaged over an 8 hour period.

1.2.2 Area Sampling

Sampling of lead concentrations within the lead control area and inside the physical boundaries which is representative of the airborne lead concentrations but is not collected in the breathing zone of personnel (approximately 5 to 6 feet above the floor).

1.2.3 Competent Person (CP)

As used in this section, refers to a person employed by the Contractor who is trained in the recognition and control of lead hazards in accordance with current Federal, State, and local regulations and has the authority to take prompt corrective actions to control the lead hazard. A Certified Industrial Hygienist (CIH) certified by the American Board of Industrial Hygiene or a Certified Safety Professional (CSP) certified by the Board of Certified Safety Professionals is the best choice.

1.2.4 Contaminated Room

Refers to a room for removal of contaminated personal protective equipment (PPE).

1.2.5 Decontamination Shower Facility

That facility that encompasses a clean clothing storage room, and a contaminated clothing storage and disposal rooms, with a shower facility in between.

1.2.6 High Efficiency Particulate Arrestor (HEPA) Filter Equipment

HEPA filtered vacuuming equipment with a UL 586 filter system capable of collecting and retaining lead-contaminated particulate. A high efficiency particulate filter demonstrates at least 99.97 percent efficiency against 0.3 micron or larger size particles.

1.2.7 Lead

Metallic lead, inorganic lead compounds, and organic lead soaps. Excludes other forms of organic lead compounds.

1.2.8 Lead Control Area

A system of control methods to prevent the spread of lead dust, paint chips or debris to adjacent areas that may include temporary containment, floor or ground cover protection, physical boundaries, and warning signs to prevent unauthorized entry of personnel. HEPA filtered local exhaust equipment may be used as engineering controls to further reduce personnel exposures or building/outdoor environmental contamination.

1.2.9 Lead Permissible Exposure Limit (PEL)

Fifty micrograms per cubic meter of air as an 8 hour time weighted average as determined by 29 CFR 1926.62. If an employee is exposed for more than eight hours in a work day, the PEL shall be determined by the following formula:

PEL (micrograms/cubic meter of air) = 400/No. hrs worked per day

1.2.10 Material Containing Lead/Paint with Lead (MCL/PWL)

Any material, including paint, which contains lead as determined by the testing laboratory using a valid test method. The requirements of this section does not apply if no detectable levels of lead are found using a quantitative method for analyzing paint or MCL using laboratory instruments with specified limits of detection (usually 0.01%). An X-Ray Fluorescence (XRF) instrument is considered a valid test method.

1.2.11 Personal Sampling

Sampling of airborne lead concentrations within the breathing zone of an employee to determine the 8 hour time weighted average concentration in accordance with 29 CFR 1926.62. Samples shall be representative of the employees' work tasks. Breathing zone shall be considered an area within a hemisphere, forward of the shoulders, with a radius of 6 to 9 inches and centered at the nose or mouth of an employee.

1.2.12 Physical Boundary

Area physically roped or partitioned off around lead control area to limit unauthorized entry of personnel.

1.3 DESCRIPTION

1.3.1 Description of Work

Construction activities impacting PWL or material containing lead which

are covered by this specification include the demolition and/or removal of material containing lead located as indicated on the drawings. Refer to the report at the end of Section 02 82 16.00 22 ENGINEERING CONTROL OF ASBESTOS CONTAINING MATERIALS (PWD ME).

1.3.2 Coordination with Other Work

The contractor shall coordinate with work being performed in adjacent areas. Coordination procedures shall be explained in the Plan and shall describe how the Contractor will prevent lead exposure to other Contractors and/or Government personnel performing work unrelated to lead activities.

1.4 SUBMITTALS

Government approval is required for submittals with a "G" designation; submittals not having a "G" designation are for Contractor Quality Control approval. Submit the following in accordance with Section 01 33 00 SUBMITTAL PROCEDURES for Design-Bid-Build projects:

SD-01 Preconstruction Submittals

Occupational and Environmental Assessment Data Report (if objective data is used to justify excluding the initial occupational exposure assessment); G

Lead Compliance Plan including CP approval (signature, date, and certification number); G

Competent Person qualifications; G

Training Certification of workers and supervisors; G

Lead waste management plan; G

Certification of Medical Examinations; G

Occupant Notification; G

SD-06 Test Reports

sampling results; G

Occupational and Environmental Assessment Data Report; G

SD-07 Certificates

Testing laboratory qualifications; G

Third party consultant qualifications; G

Clearance Certification; G

SD-11 Closeout Submittals

Completed and signed hazardous waste manifest from treatment or disposal facility; G

Waste turn-in documents or weight tickets for non-hazardous wastes

that are disposed of at a sanitary or construction and demolition landfills; G

1.5 QUALITY ASSURANCE

1.5.1 Qualifications

1.5.1.1 Competent Person (CP)

Submit name, address, and telephone number of the CP selected to perform responsibilities specified in paragraph entitled "Competent Person (CP) Responsibilities." Provide documented construction project-related experience with implementation of OSHA's Lead in Construction standard (29 CFR 1926.62) which shows ability to assess occupational and environmental exposure to lead, experience with the use of respirators, personal protective equipment and other exposure reduction methods to protect employee health. Submit proper documentation that the CP is trained and certified in accordance with Federal, State and local laws. The competent person shall be a licensed lead-based paint abatement Supervisor/Project Designer in the State of Maine.

1.5.1.2 Training Certification

Submit a certificate for each worker and supervisor, signed and dated by the accredited training provider, stating that the employee has received the required lead training specified in 29 CFR 1926.62(l) and is certified to perform or supervise deleading, lead removal or demolition activities in the State of Maine.

1.5.1.3 Testing Laboratory

Submit the name, address, and telephone number of the testing laboratory selected to perform the air and wipe analysis, testing, and reporting of airborne concentrations of lead. Use a laboratory participating in the EPA National Lead Laboratory Accreditation Program (NLLAP) by being accredited by either the American Association for Laboratory Accreditation (A2LA) or the American Industrial Hygiene Association (AIHA) and that is successfully participating in the Environmental Lead Proficiency Analytical Testing (ELPAT) program to perform sample analysis. Laboratories selected to perform blood lead analysis shall be OSHA approved.

1.5.1.4 Third Party Consultant Qualifications

Submit the name, address and telephone number of the third party consultant selected to perform the wipe sampling for determining concentrations of lead in dust. Submit proper documentation that the consultant is trained and certified as an inspector technician or inspector/risk assessor by the USEPA authorized State (or local) certification and accreditation program.

1.5.2 Requirements

1.5.2.1 Competent Person (CP) Responsibilities

a. Verify training meets all Federal, State, and local requirements.

b. Review and approve Lead Compliance Plan for conformance to the applicable referenced standards.

c. Continuously inspect PWL or MCL work for conformance with the approved plan.

d. Perform (or oversee performance of) air sampling. Complete upgrades or downgrades (whichever is appropriate based on exposure) on the use of PPE (respirators included) and engineering controls.

e. Ensure work is performed in strict accordance with specifications and all applicable regulations at all times.

f. Control work to prevent hazardous exposure to human beings and to the environment at all times.

g. Supervise final cleaning of the lead control area, take clearance wipe samples if necessary; review clearance sample results and make recommendations for further cleaning. Verify waste materials have been properly transferred, CP has responsibility to comply and verify compliance.

h. Certify the conditions of the work as called for elsewhere in this specification.

1.5.2.2 Lead Compliance Plan

Submit a detailed job-specific plan of the work procedures to be used in the disturbance of PWL or MCL. The plan shall include a sketch showing the location, size, and details of lead control areas, critical barriers, physical boundaries, location and details of decontamination facilities, viewing ports, and mechanical ventilation system. Include a description of equipment and materials, work practices, controls and job responsibilities for each activity from which lead is emitted. Include in the plan, eating, drinking, smoking, hygiene facilities and sanitary procedures, interface of trades, sequencing of lead related work, collected waste water and dust containing lead and debris, air sampling, respirators, personal protective equipment, and a detailed description of the method of containment of the operation to ensure that lead is not released outside of the lead control area. Include site preparation, cleanup and clearance procedures. Include occupational and environmental sampling, training and strategy, sampling and analysis strategy and methodology, frequency of sampling, duration of sampling, and qualifications of sampling personnel in the air sampling portion of the plan. Include a description of arrangements made among contractors on multicontractor worksites to inform affected employees and to clarify responsibilities to control exposures.

In occupied buildings, the plan shall also include an occupant protection program that describes the measures that will be taken during the work to protect the building occupants.

1.5.2.3 Occupational and Environmental Assessment Data Report

Submit occupational and environmental sampling results to the Contracting Officer within three working days of collection, signed by the testing laboratory employee performing the analysis, the employee that performed the sampling, and the CP.

a. The initial monitoring shall represent each job classification, or if

working conditions are similar to previous jobs by the same employer, provide previously collected exposure data that can be used to estimate worker exposures per 29 CFR 1926.62. The data shall represent the worker's regular daily exposure to lead for stated work.

b. Submit worker exposure data gathered during the task based trigger operations of 29 CFR 1926.62 with a complete process description. This includes manual demolition, manual scraping, manual sanding, heat gun, power tool cleaning, rivet busting, cleanup of dry expendable abrasives, abrasive blast enclosure removal, abrasive blasting, welding, cutting and torch burning where lead containing coatings are present.

c. The initial assessment shall determine the requirement for further monitoring and the need to fully implement the control and protective requirements including the lead compliance plan per 29 CFR 1926.62.

1.5.2.4 Medical Examinations

Initial medical surveillance as required by 29 CFR 1926.62 shall be made available to all employees exposed to lead at any time (1 day) above the action level. Full medical surveillance shall be made available to all employees on an annual basis who are or may be exposed to lead in excess of the action level for more than 30 days a year or as required by 29 CFR 1926.62. Adequate records shall show that employees meet the medical surveillance requirements of 29 CFR 1926.33, 29 CFR 1926.62 and 29 CFR 1926.103. Provide medical surveillance to all personnel exposed to lead as indicated in 29 CFR 1926.62. Maintain complete and accurate medical records of employees for the duration of employment plus 30 years.

1.5.2.5 Training

Train each employee performing work that disturbs lead, who performs MCL/PWL disposal, and air sampling operations prior to the time of initial job assignment and annually thereafter, in accordance with 29 CFR 1926.21, 29 CFR 1926.62, and State and local regulations where appropriate.

1.5.2.6 Respiratory Protection Program

a. Provide each employee required to wear a respirator a respirator fit test at the time of initial fitting and at least annually thereafter as required by 29 CFR 1926.62.

b. Establish and implement a respiratory protection program as required by AIHA Z88.6, 29 CFR 1926.103, 29 CFR 1926.62, and 29 CFR 1926.55.

1.5.2.7 Hazard Communication Program

Establish and implement a Hazard Communication Program as required by 29 CFR 1926.59.

1.5.2.8 Lead Waste Management

The Lead Waste Management Plan shall comply with applicable requirements of Federal, State, and local hazardous waste regulations and shall address:

a. Identification and classification of wastes associated with the work.

b. Estimated quantities of wastes to be generated and disposed of.

c. All HW must be placed in a Shipyard permitted HWAA or Contractors shall turn HW in to a HWAA not later than the end of the shift on which it is generated. Responsibility for compliance is upon the Contractor. All hazardous wastes generated within the confines of the Shipyard are disposed of by the Government. Accordingly, all hazardous wastes generated by the Contractor to accomplish requirements of this contract will be considered Government-generated, and disposed of by the Government. Contractor shall not bring hazardous wastes onto Government property.

d. Names and qualifications (experience and training) of personnel who will be working on-site with hazardous wastes.

e. List of waste handling equipment to be used in performing the work, to include cleaning, volume reduction, and transport equipment.

f. Spill prevention, containment, and cleanup contingency measures including a health and safety plan to be implemented in accordance with 29 CFR 1926.65.

g. Work plan and schedule for waste containment, removal and disposal. Proper containment of the waste includes using acceptable waste containers (e.g., 55-gallon drums) as well as proper marking/labeling of the containers. Wastes shall be cleaned up and containerized daily.

h. Include any process that may alter or treat waste rendering a hazardous waste non hazardous.

1.5.2.9 Environmental, Safety and Health Compliance

In addition to the detailed requirements of this specification, comply with laws, ordinances, rules, and regulations of Federal, State, and local authorities regarding lead. Comply with the applicable requirements of the current issue of 29 CFR 1926.62. Submit matters regarding interpretation of standards to the Contracting Officer for resolution before starting work. Where specification requirements and the referenced documents vary, the most stringent requirement shall apply. The following SHIPYARD, NAVY and STATE OF MAINE laws, ordinances, criteria, rules and regulations regarding removing, handling, storing, transporting, and disposing of lead-contaminated materials apply:

a. Shipyard Instruction 5090.6D Solid Waste Plan

b. Shipyard Instruction 5090.30 Hazardous Waste Generator Standards

c.

1.5.3 Pre-Construction Conference

Along with the CP, meet with the Contracting Officer to discuss in detail the Lead Waste Management Plan and the Lead Compliance Plan, including procedures and precautions for the work.

1.6 EQUIPMENT

1.6.1 Respirators

Furnish appropriate respirators approved by the National Institute for Occupational Safety and Health (NIOSH), Department of Health and Human Services, for use in atmospheres containing lead dust, fume and mist. Respirators shall comply with the requirements of 29 CFR 1926.62.

1.6.2 Special Protective Clothing

Furnish personnel who will be exposed to lead-contaminated dust with proper protective whole body clothing, head covering, gloves, eye, and foot coverings as required by 29 CFR 1926.62. Furnish proper disposable plastic or rubber gloves to protect hands. Reduce the level of protection only after obtaining approval from the CP.

1.6.3 Rental Equipment Notification

If rental equipment is to be used during PWL or MCL handling and disposal, notify the rental agency in writing concerning the intended use of the equipment.

1.6.4 Vacuum Filters

UL 586 labeled HEPA filters.

1.6.5 Equipment for Government Personnel

Furnish the Contracting Officer with two complete sets of personal protective equipment (PPE) daily, as required herein, for entry into and inspection of the lead removal work within the lead controlled area. Personal protective equipment shall include disposable whole body covering, including appropriate foot, head, eye, and hand protection. PPE shall remain the property of the Contractor. The Government will provide respiratory protection for the Contracting Officer.

1.7 PROJECT/SITE CONDITIONS

1.7.1 Protection of Existing Work to Remain

Perform work without damage or contamination of adjacent areas. Where existing work is damaged or contaminated, restore work to its original condition or better as determined by the Contracting Officer.

PART 2 PRODUCTS

Not used.

PART 3 EXECUTION

3.1 PREPARATION

3.1.1 Protection

3.1.1.1 Notification

a. Notify the Contracting Officer 20 days prior to the start of any lead work.

3.1.1.2 Lead Control Area

a. Physical Boundary - Provide physical boundaries around the lead control area by roping off the area designated in the work plan or providing curtains, portable partitions or other enclosures to ensure that lead will not escape outside of the lead control area.

b. Warning Signs - Provide warning signs at approaches to lead control areas. Locate signs at such a distance that personnel may read the sign and take the necessary precautions before entering the area. Signs shall comply with the requirements of 29 CFR 1926.62.

3.1.1.3 Furnishings

Furniture and equipment will be removed from the area of work by the Government to the greatest extent possible before lead work begins. If furnishings and equipment are to remain in the building, cover and seal furnishings with 6-mil plastic sheet or remove from the work area and store in a location on site approved by the Contracting Officer. Reinstall furnishings and equipment after the completion of lead work.

3.1.1.4 Heating, Ventilating and Air Conditioning (HVAC) Systems

Shut down, lock out, and isolate HVAC systems that supply, exhaust, or pass through the lead control areas. Seal intake and exhaust vents in the lead control area with 6 mil plastic sheet and tape. Seal seams in HVAC components that pass through the lead control area. Provide temporary HVAC system for areas in which HVAC has been shut down outside the lead control area.

3.1.1.5 Decontamination Shower Facility

Provide clean and contaminated change rooms and shower facilities in accordance with this specification and 29 CFR 1926.62.

3.1.1.6 Eye Wash Station

Where eyes may be exposed to injurious corrosive materials, suitable facilities for quick drenching or flushing of the eyes shall be provided within the limits of the project work area.

3.1.1.7 Mechanical Ventilation System

a. To the extent feasible, use local exhaust ventilation or other collection systems, approved by the CP. Local exhaust ventilation systems shall be evaluated and maintained in accordance with 29 CFR 1926.62.

b. Ensure system is connected to HEPA filters.

c. Use locally exhausted, power actuated tools or manual hand tools.

3.1.1.8 Personnel Protection

Personnel shall wear and use protective clothing and equipment as specified herein. Eating, smoking, or drinking or application of cosmetics is not permitted in the lead control area. No one will be permitted in the lead control area unless they have been appropriately

trained and provided with protective equipment.

3.2 ERECTION

3.2.1 Lead Control Area Requirements

Establish a lead control area by completely establishing barriers and physical boundaries around the area or structure where PWL or MCL removal operations will be performed.

3.3 APPLICATION

3.3.1 Lead Work

Perform lead work in accordance with approved Lead Compliance Plan. Use procedures and equipment required to limit occupational exposure and environmental contamination with lead when the work is performed in accordance with 29 CFR 1926.62 or 40 CFR 745, and as specified herein. Dispose of all PWL or MCL and associated waste in compliance with Federal, State, and local requirements and requirements specified herein.

3.3.2 Paint with Lead or Material Containing Lead Removal

Provide methodology for removing lead in the Lead Compliance Plan. Select lead removal processes to minimize contamination of work areas outside the control area with lead-contaminated dust or other lead-contaminated debris or waste and to ensure that unprotected personnel are not exposed to hazardous concentrations of lead. Describe this removal process in the Lead Compliance Plan.

3.3.2.1 Paint with Lead or Material Containing Lead - Indoor Removal

Perform removal in the lead control areas using enclosures, barriers or containments. Collect residue / debris for disposal in accordance with Federal, State, and local requirements.

3.3.2.2 Paint with Lead or Material Containing Lead - Outdoor Removal

Perform outdoor removal as indicated in Federal, State, and local regulations and in the Lead Compliance Plan. The worksite preparation shall be job dependent and presented in the Lead Compliance Plan.

3.3.3 Personnel Exiting Procedures

Whenever personnel exit the lead-controlled area, they shall perform the following procedures and shall not leave the work place wearing any clothing or equipment worn in the control area:

a. Vacuum all clothing before entering the contaminated change room.

b. Remove protective clothing in the contaminated change room, and place them in an approved impermeable disposal bag.

c. Change to clean clothes prior to leaving the clean clothes storage area. The employer shall provide shower facilities, where feasible, for use by employees whose airborne exposure to lead is above PEL. The employer also shall assure, where shower facilities are available, that employees shower at the end of the work shift and shall provide an adequate supply of cleansing agents and towels for use by effected

employees.

3.4 FIELD QUALITY CONTROL

3.4.1 Tests

3.4.1.1 Air and Wipe Sampling

Conduct sampling for lead in accordance with 29 CFR 1926.62 and as specified herein. Air and wipe sampling shall be directed or performed by the CP.

a. The CP shall be on the job site directing the air and wipe sampling and inspecting the PWL or MCL removal work to ensure that the requirements of the contract have been satisfied during the entire PWL or MCL operation.

b. Collect personal air samples on employees who are anticipated to have the greatest risk of exposure as determined by the CP. In addition, collect air samples on at least twenty-five percent of the work crew or a minimum of two employees, whichever is greater, during each work shift.

c. Submit results of air samples to Contracting Officer, signed by the CP, within 72 hours after the air samples are taken.

d. Conduct area air sampling daily, on each shift in which lead-based paint removal operations are performed, in areas immediately adjacent to the lead control area. Sufficient area monitoring shall be conducted to ensure unprotected personnel are not exposed at or above 30 micrograms per cubic meter of air. If 30 micrograms per cubic meter of air is reached or exceeded, stop work, correct the conditions(s) causing the increased levels. Notify the Contracting Officer immediately. Determine if condition(s) require any further change in work methods. Removal work shall resume only after the CP and the Contracting Officer give approval.

e. Before any work begins, collect and analyze baseline wipe samples in accordance with methods defined by Federal, State, and local standards inside and outside of the physical boundary to assess the degree of dust contamination in the facility prior to lead disturbance or removal.

f. Surface Wipe Samples - Collect surface wipe samples on floors at a location no greater than 10 feet outside the lead control area at a frequency of once per day while lead removal work is conducted in occupied buildings. Surface wipe results shall meet criteria in paragraph "Clearance Certification".

3.4.1.2 Sampling After Removal

After the visual inspection, collect wipe or soil samples according to the HUD protocol contained in HUD 6780 to determine the lead content of settled dust in micrograms per square meter foot of surface area and parts per million (ppm) for soil.

3.4.1.3 Testing of Material Containing Lead Residue

Test residue in accordance with 40 CFR 261 for hazardous waste.

3.5 CLEANING AND DISPOSAL

3.5.1 Cleanup

Maintain surfaces of the lead control area free of accumulations of dust and debris. Restrict the spread of dust and debris; keep waste from being distributed over the work area. Do not dry sweep or use pressurized air to clean up the area. At the end of each shift and when the lead operation has been completed, clean the controlled area of visible contamination by vacuuming with a HEPA filtered vacuum cleaner, wet mopping the area and wet wiping the area as indicated by the Lead Compliance Plan. Reclean areas showing dust or debris. After visible dust and debris is removed, wet wipe and HEPA vacuum all surfaces in the controlled area. If adjacent areas become contaminated at any time during the work, clean, visually inspect, and then wipe sample all contaminated areas. The CP shall then certify in writing that the area has been cleaned of lead contamination before clearance testing. Refer to Disposal Section below, regarding controls for generated waste and statements to how they will be controlled (daily transfers to HWAA/HWSF according to local requirements).

3.5.1.1 Clearance Certification

The CP shall certify in writing that air samples collected outside the lead control area during paint removal operations are less than 30 micrograms per cubic meter of air; the respiratory protection used for the employees was adequate; the work procedures were performed in accordance with 29 CFR 1926.62; and that there were no visible accumulations of material and dust containing lead left in the work site. Do not remove the lead control area or roped off boundary and warning signs prior to the Contracting Officer's acknowledgement of receipt of the CP certification.

Certify surface wipe samples are not significantly greater than the initial surface loading determined prior to work.

Clear the lead control area in industrial facilities of all visible dust and debris.

3.5.2 Disposal

Collect lead-contaminated waste, scrap, debris, containers, equipment, and lead-contaminated clothing and place in labeled bags for disposal. The Contractor shall label and affix a label permanently attached to the bags identifying them as "Lead Waste" and providing the following additional information:

* Abatement Contractor Name
* Construction Contract Number
* Site Location or Building Number
* Portsmouth Naval Shipyard, Kittery, Me.
* Date

All HW must be placed in a Shipyard permitted HWAA or Contractors shall turn HW in to a HWAA not later than the end of the shift on which it is generated. Responsibility for compliance is upon the Contractor. All hazardous wastes generated within the confines of the Shipyard are disposed of by the Government. Accordingly, all hazardous wastes generated by the Contractor to accomplish requirements of this contract will be considered Government-generated, and disposed of by the Government. Contractor shall not bring hazardous wastes onto Government property.

Containers positioned within the work area boundaries shall have covers in place whenever containers are not in use. Notify the Contracting Officer or his/her designated representative to remove full containers.

3.5.2.1 Payment for Non-Hazardous Waste

Payment for disposal of non-hazardous waste will not be made until a signed copy of the manifest from the treatment or disposal facility certifying the amount of lead-containing materials or non-hazardous waste delivered is returned and a copy is furnished to the Government.

-- End of Section --

SECTION 03 30 00

CAST-IN-PLACE CONCRETE
05/14

PART 1 GENERAL

1.1 REFERENCES

The publications listed below form a part of this specification to the extent referenced. The publications are referred to within the text by the basic designation only.

AMERICAN CONCRETE INSTITUTE INTERNATIONAL (ACI)

ACI 117	(2010; Errata 2011) Specifications for Tolerances for Concrete Construction and Materials and Commentary
ACI 121R	(2008) Guide for Concrete Construction Quality Systems in Conformance with ISO 9001
ACI 211.1	(1991; R 2009) Standard Practice for Selecting Proportions for Normal, Heavyweight and Mass Concrete
ACI 211.2	(1998; R 2004) Standard Practice for Selecting Proportions for Structural Lightweight Concrete
ACI 213R	(2014) Guide for Structural Lightweight-Aggregate Concrete
ACI 301	(2010; Errata 2011) Specifications for Structural Concrete
ACI 302.1R	(2004; Errata 2006; Errata 2007) Guide for Concrete Floor and Slab Construction
ACI 304.2R	(1996; R 2008) Placing Concrete by Pumping Methods
ACI 304R	(2000; R 2009) Guide for Measuring, Mixing, Transporting, and Placing Concrete
ACI 305R	(2010) Guide to Hot Weather Concreting
ACI 306.1	(1990; R 2002) Standard Specification for Cold Weather Concreting
ACI 306R	(2010) Guide to Cold Weather Concreting
ACI 318	(2011; Errata 1 2011; Errata 2 2012; Errata 3-4 2013) Building Code Requirements for Structural Concrete and Commentary

ACI 347	(2004; Errata 2008; Errata 2012) Guide to Formwork for Concrete
ACI SP-15	(2011) Field Reference Manual: Standard Specifications for Structural Concrete ACI 301-05 with Selected ACI References
ACI SP-66	(2004) ACI Detailing Manual

AMERICAN HARDBOARD ASSOCIATION (AHA)

AHA A135.4	(1995; R 2004) Basic Hardboard

AMERICAN WELDING SOCIETY (AWS)

AWS D1.4/D1.4M	(2011) Structural Welding Code - Reinforcing Steel

ASTM INTERNATIONAL (ASTM)

ASTM A1064/A1064M	(2013) Standard Specification for Carbon-Steel Wire and Welded Wire Reinforcement, Plain and Deformed, for Concrete
ASTM A615/A615M	(2014) Standard Specification for Deformed and Plain Carbon-Steel Bars for Concrete Reinforcement
ASTM A934/A934M	(2013) Standard Specification for Epoxy-Coated Prefabricated Steel Reinforcing Bars
ASTM A996/A996M	(2014) Standard Specification for Rail-Steel and Axle-Steel Deformed Bars for Concrete Reinforcement
ASTM C1017/C1017M	(2013) Standard Specification for Chemical Admixtures for Use in Producing Flowing Concrete
ASTM C1107/C1107M	(2014) Standard Specification for Packaged Dry, Hydraulic-Cement Grout (Nonshrink)
ASTM C1240	(2014) Standard Specification for Silica Fume Used in Cementitious Mixtures
ASTM C143/C143M	(2012) Standard Test Method for Slump of Hydraulic-Cement Concrete
ASTM C150/C150M	(2012) Standard Specification for Portland Cement
ASTM C1602/C1602M	(2012) Standard Specification for Mixing Water Used in Production of Hydraulic Cement Concrete
ASTM C172/C172M	(2014) Standard Practice for Sampling Freshly Mixed Concrete

ASTM C173/C173M	(2014) Standard Test Method for Air Content of Freshly Mixed Concrete by the Volumetric Method
ASTM C192/C192M	(2013a) Standard Practice for Making and Curing Concrete Test Specimens in the Laboratory
ASTM C231/C231M	(2014) Standard Test Method for Air Content of Freshly Mixed Concrete by the Pressure Method
ASTM C260/C260M	(2010a) Standard Specification for Air-Entraining Admixtures for Concrete
ASTM C295/C295M	(2012) Petrographic Examination of Aggregates for Concrete
ASTM C31/C31M	(2012) Standard Practice for Making and Curing Concrete Test Specimens in the Field
ASTM C33/C33M	(2013) Standard Specification for Concrete Aggregates
ASTM C39/C39M	(2014a) Standard Test Method for Compressive Strength of Cylindrical Concrete Specimens
ASTM C494/C494M	(2013) Standard Specification for Chemical Admixtures for Concrete
ASTM C618	(2012a) Standard Specification for Coal Fly Ash and Raw or Calcined Natural Pozzolan for Use in Concrete
ASTM C94/C94M	(2014a) Standard Specification for Ready-Mixed Concrete
ASTM D1751	(2004; E 2013; R 2013) Standard Specification for Preformed Expansion Joint Filler for Concrete Paving and Structural Construction (Nonextruding and Resilient Bituminous Types)
ASTM D1752	(2004a; R 2013) Standard Specification for Preformed Sponge Rubber Cork and Recycled PVC Expansion
ASTM D412	(2006a; R 2013) Standard Test Methods for Vulcanized Rubber and Thermoplastic Elastomers - Tension
ASTM D471	(2012a) Standard Test Method for Rubber Property - Effect of Liquids
ASTM E1745	(2011) Standard Specification for Water Vapor Retarders Used in Contact with Soil or Granular Fill under Concrete Slabs

ASTM E96/E96M	(2013) Standard Test Methods for Water Vapor Transmission of Materials

CONCRETE REINFORCING STEEL INSTITUTE (CRSI)

CRSI 10MSP	(2009; 28th Ed) Manual of Standard Practice

NATIONAL INSTITUTE OF STANDARDS AND TECHNOLOGY (NIST)

NIST PS 1	(2009) DOC Voluntary Product Standard PS 1-07, Structural Plywood

U.S. ARMY CORPS OF ENGINEERS (USACE)

COE CRD-C 513	(1974) Corps of Engineers Specifications for Rubber Waterstops
COE CRD-C 572	(1974) Corps of Engineers Specifications for Polyvinylchloride Waterstops

1.2 DEFINITIONS

a. "Cementitious material" as used herein must include all portland cement, pozzolan, fly ash, ground granulated blast-furnace slag, and silica fume.

b. "Exposed to public view" means situated so that it can be seen from eye level from a public location after completion of the building. A public location is accessible to persons not responsible for operation or maintenance of the building.

c. "Chemical admixtures" are materials in the form of powder or fluids that are added to the concrete to give it certain characteristics not obtainable with plain concrete mixes.

d. "Complementary cementing materials" (CCM) include coal fly ash, silica fume, granulated blast-furnace slag, natural or calcined pozzolans, and ultra-fine coal ash when used in such proportions to replace the portland cement that result in improvement to sustainability and durability and reduced cost.

e. "Design strength" (f'c) is the specified compressive strength of concrete at time(s) specified in this section to meet structural design criteria.

f. "Mass Concrete" is any concrete system that approaches a maximum temperature of 158 degrees F within the first 72 hours of placement. In addition, it includes all concrete elements with a section thickness of 3 feet or more regardless of temperature.

g. "Mixture proportioning" is the process of designing concrete mixture proportions to enable it to meet the strength, service life and constructability requirements of the project while minimizing the initial and life-cycle cost.

h. "Mixture proportions" are the masses or volumes of individual ingredients used to make a unit measure (cubic meter or cubic yard) of concrete.

i. "Pozzolan" is a siliceous or siliceous and aluminous material, which in itself possesses little or no cementitious value but will, in finely divided form and in the presence of moisture, chemically react with calcium hydroxide at ordinary temperatures to form compounds possessing cementitious properties.

j. "Workability (or consistence)" is the ability of a fresh (plastic) concrete mix to fill the form/mould properly with the desired work (vibration) and without reducing the concrete's quality. Workability depends on water content, chemical admixtures, aggregate (shape and size distribution), cementitious content and age (level of hydration).

1.3 SUBMITTALS

Government approval is required for submittals with a "G" designation; submittals not having a "G" designation are for Contractor Quality Control approval. Submit the following in accordance with Section 01 33 00 SUBMITTAL PROCEDURES:

SD-01 Preconstruction Submittals

Quality Control Plan; G

Reinforcing steel; G

SD-03 Product Data

Joint filler

Cementitious Materials

Vapor retarder or Vapor barrier

Reinforcement

SD-05 Design Data

Concrete mix design; G

SD-06 Test Reports

Concrete mix design; G

Aggregates

Compressive strength tests; G

Air Content

Slump Tests

SD-07 Certificates

Material Safety Data Sheets

1.4 MODIFICATION OF REFERENCES

Accomplish work in accordance with ACI publications except as modified

herein. Consider the advisory or recommended provisions to be mandatory. Interpret reference to the "Building Official," the "Structural Engineer," and the "Architect/Engineer" to mean the Contracting Officer.

1.5 DELIVERY, STORAGE, AND HANDLING

Follow ACI 301, ACI 304R and ASTM A934/A934M requirements and recommendations. Do not deliver concrete until vapor retarder, vapor barrier, forms, reinforcement, embedded items, and chamfer strips are in place and ready for concrete placement. Do not store concrete curing compounds or sealers with materials that have a high capacity to adsorb volatile organic compound (VOC) emissions. Do not store concrete curing compounds or sealers in occupied spaces.

1.5.1 Reinforcement

Store reinforcement of different sizes and shapes in separate piles or racks raised above the ground to avoid excessive rusting. Protect from contaminants such as grease, oil, and dirt. Ensure bar sizes can be accurately identified after bundles are broken and tags removed.

1.6 QUALITY ASSURANCE

1.6.1 Design Data

1.6.1.1 Concrete Mix Design

Sixty days minimum prior to concrete placement, submit a mix design for each strength and type of concrete. Submit a complete list of materials including type; brand; source and amount of cement, complementary cementitious materials, , and admixtures; and applicable reference specifications. Submit mill test and all other test for cement, complementary cementitious materials, aggregates, and admixtures. Provide documentation of maximum nominal aggregate size, gradation analysis, percentage retained and passing sieve, and a graph of percentage retained verses sieve size. Provide mix proportion data using at least three different water-cementitious material ratios for each type of mixture, which produce a range of strength encompassing those required for each type of concrete required. If source material changes, resubmit mix proportion data using revised source material. Provide only materials that have been proven by trial mix studies to meet the requirements of this specification, unless otherwise approved in writing by the Contracting Officer. Indicate clearly in the submittal where each mix design is used when more than one mix design is submitted. Resubmit data on concrete components if the qualities or source of components changes. For previously approved concrete mix designs used within the past twelve months, the previous mix design may be re-submitted without further trial batch testing if accompanied by material test data conducted within the last six months. Obtain mix design approval from the contracting officer prior to concrete placement.

1.6.2 Shop Drawings

1.6.2.1 Reinforcing Steel

ACI SP-66. Indicate bending diagrams, assembly diagrams, splicing and laps of bars, shapes, dimensions, and details of bar reinforcing, accessories, and concrete cover. Do not scale dimensions from structural drawings to determine lengths of reinforcing bars. Reproductions of

contract drawings are unacceptable.

1.6.3 Control Submittals1.6.3.1 Material Safety Data Sheets

Submit Material Safety Data Sheets (MSDS) for all materials that are regulated for hazardous health effects. MSDS must be readily accessible during each work shift to employees when they are at the construction site.

1.6.4 Quality Control Plan

Develop and submit for approval a concrete quality control program in accordance with the guidelines of ACI 121R and as specified herein. The plan must include approved laboratories. Provide direct oversight for the concrete qualification program inclusive of associated sampling and testing. All quality control reports must be provided to the Contracting Officer, Quality Manager and Concrete Supplier. Maintain a copy of ACI SP-15 and CRSI 10MSP at project site.

PART 2 PRODUCTS

2.1 MATERIALS FOR FORMS

Provide wood, plywood, plastic, carton, or steel. Use plywood or steel forms where a smooth form finish is required.

2.1.1 Wood Forms

Use lumber as follows. Provide lumber that is square edged or tongue-and-groove boards, free of raised grain, knotholes, or other surface defects. Provide plywood that complies with NIST PS 1, B-B concrete form panels or better or AHA A135.4, hardboard for smooth form lining.

2.1.1.1 Concrete Form Plywood (Standard Rough)

Provide plywood that conforms to NIST PS 1, B-B, concrete form, not less than 5/8-inch thick.

2.1.1.2 Overlaid Concrete Form Plywood (Standard Smooth)

Provide plywood that conforms to NIST PS 1, B-B, high density form overlay, not less than 5/8-inch thick.

2.1.2 Steel Forms

Provide steel form surfaces that do not contain irregularities, dents, or sags.

2.2 FORM TIES AND ACCESSORIES

Provide a form tie system that does not leave mild steel after break-off or removal any closer than 2 inches from the exposed surface. Do not use wire alone. Form ties and accessories must not reduce the effective cover of the reinforcement.

2.2.1 Waterstops

2.2.1.1 PVC Waterstop

Polyvinylchloride waterstops must conform to COE CRD-C 572.

2.2.1.2 Rubber Waterstop

Rubber waterstops must conform to COE CRD-C 513.

2.2.1.3 Thermoplastic Elastomeric Rubber Waterstop

Thermoplastic elastomeric rubber waterstops must conform to ASTM D471.

2.2.1.4 Hydrophilic Waterstop

Swellable strip type compound of polymer modified chloroprene rubber that swells upon contact with water must conform to ASTM D412 as follows: Tensile strength 420 psi minimum; ultimate elongation 600 percent minimum. Hardness must be 50 minimum on the type A durometer and the volumetric expansion ratio in distilled water at 70 degrees F must be 3 to 1 minimum.

2.3 CONCRETE MIX DESIGN

2.3.1 Contractor-Furnished Mix Design

ACI 211.1, ACI 301, and ACI 318 and ACI 211.2 ACI 304.2R and ACI 213R except as otherwise specified. Indicate the compressive strength (f'c) of the concrete for each portion of the structure(s) as specified below. Where faster set time is required, use Type III cement before using calcium chloride with approval from the contracting officer.

2.3.1.1 Slab-on-Grade

Proportion normal-weight concrete mixture as follows:

a. Minimum Compressive Strength: 4000 psi at 28 days.

b. Maximum Water-Cementitious Materials Ratio: 0.40 .

c. Slump Limit: 5 inches, plus or minus 1 inch.

d. Air Content: 7 percent, plus or minus 1.5 percent at point of delivery for 1 inch nominal maximum aggregate size.

2.3.1.2 Mix Proportions for Normal Weight Concrete

Trial design batches, mixture proportioning studies, and testing requirements for various classes and types of concrete specified are the responsibility of the Contractor. Base mixture proportions on compressive strength as determined by test specimens fabricated in accordance with ASTM C192/C192M and tested in accordance with ASTM C39/C39M. Samples of all materials used in mixture proportioning studies must be representative of those proposed for use in the project and must be accompanied by the manufacturer's or producer's test report indicating compliance with these specifications. Base trial mixtures having proportions, consistencies, and air content suitable for the work on methodology described in ACI 211.1. In the trial mixture, use at least three different water-cementitious

material ratios for each type of mixture, which must produce a range of strength encompassing those required for each class and type of concrete required on the project. The maximum water-cementitious material ratio allowed must be based on equivalent water-cementitious material ratio calculations as determined by the conversion from the weight ratio of water to cement plus pozzolan by weight equivalency method. Design laboratory trial mixture for maximum permitted slump and air content. Each combination of material proposed for use must have separate trial mixture, except for accelerator or retarder use can be provided without separate trial mixture. Report the temperature of concrete in each trial batch. For each water-cementitious material ratio, at least three test cylinders for each test age must be made and cured in accordance with ASTM C192/C192M and tested in accordance with ASTM C39/C39M for 7, 28, days. From these results, plot a curve showing the relationship between water-cementitious material ratio and strength for each set of trial mix studies. In addition, plot a curve showing the relationship between 7 and 28 day strengths.

2.3.1.3 Required Average Strength of Mix Design

The selected mixture must produce an average compressive strength exceeding the specified strength by the amount indicated in ACI 301, but may not exceed the specified strength at the same age by more than 20 percent. When a concrete production facility has a record of at least 15 consecutive tests, the standard deviation must be calculated and the required average compressive strength must be determined in accordance with ACI 301.

2.3.2 Ready-Mix Concrete

Provide concrete that meets the requirements of ASTM C94/C94M.

Ready-mixed concrete manufacturer must provide duplicate delivery tickets with each load of concrete delivered. Provide delivery tickets with the following information in addition to that required by ASTM C94/C94M:

Type and brand cement

Cement and complementary cementitious materials content in 94-pound bags per cubic yard of concrete

Maximum size of aggregate

Amount and brand name of admixtures

Total water content expressed by water cementitious material ratio

2.4 MATERIALS

2.4.1 Cementitious Materials

For exposed concrete, use one manufacturer and one source for each type of cement, ground slag, fly ash, and pozzolan.

2.4.1.1 Fly Ash

ASTM C618, Class F, except that the maximum allowable loss on ignition must not exceed 3 percent. Class F fly ash for use in mitigating Alkali-Silica Reactivity must have a Calcium Oxide (CaO) content of less

than 8 percent and a total equivalent alkali content less than 1.5 percent.

2.4.1.2 Raw or Calcined Natural Pozzolan

Natural pozzolan must be raw or calcined and conform to ASTM C618, Class N, including the optional requirements for uniformity and effectiveness in controlling Alkali-Silica reaction and must have an ignition loss not exceeding 3 percent. Class N pozzolan for use in mitigating Alkali-Silica Reactivity must have a Calcium Oxide (CaO) content of less than 13 percent and total equivalent alkali content less than 3 percent.

2.4.1.3 Silica Fume

Silica fume must conform to ASTM C1240, including the optional limits on reactivity with cement alkalis. Silica fume may be furnished as a dry, densified material or as slurry. Proper mixing is essential to accomplish proper distribution of the silica fume and avoid agglomerated silica fume which can react with the alkali in the cement resulting in premature and extensive concrete damage. Supervision at the batch plant, finishing, and curing is essential. Provide at the Contractor's expense the services of a manufacturer's technical representative, experienced in mixing, proportioning, placement procedures, and curing of concrete containing silica fume. This representative must be present on the project prior to and during at least the first 4 days of concrete production and placement using silica fume. A High Range Water Reducer (HRWR) must be used with silica fume.

2.4.1.4 Portland Cement

Provide cement that conforms to ASTM C150/C150M, Type II, with tri-calcium aluminates (C3A) content less than 10 percent and a maximum cement-alkali content of 0.80 percent Na2Oe (sodium oxide) equivalent.. Use one brand and type of cement for formed concrete having exposed-to-view finished surfaces.

2.4.2 Water

Water must comply with the requirements of ASTM C1602/C1602M. Minimize the amount of water in the mix. Improve workability by adjusting the grading rather than by adding water. Water must be potable; free from injurious amounts of oils, acids, alkalis, salts, organic materials, or other substances deleterious to concrete. Submit test report showing water complies with ASTM C1602/C1602M.

2.4.3 Aggregates

ASTM C33/C33M, except as modified herein. Furnish aggregates for exposed concrete surfaces from one source. Provide aggregates that do not contain any substance which may be deleteriously reactive with the alkalies in the cement. Submit test report showing compliance with ASTM C33/C33M.

Aggregates must not possess properties or constituents that are known to have specific unfavorable effects in concrete when tested in accordance with ASTM C295/C295M.

2.4.4 Nonshrink Grout

ASTM C1107/C1107M.

2.4.5 Admixtures

ASTM C494/C494M: Type A, water reducing; Type B, retarding; Type C, accelerating; Type D, water-reducing and retarding; and Type E, water-reducing and accelerating admixture. Do not use calcium chloride admixtures. Submit product data for admixtures used in concrete.

2.4.5.1 Air-Entraining

ASTM C260/C260M.

2.4.5.2 High Range Water Reducer (HRWR) (Superplasticizers)

ASTM C494/C494M, Type F and ASTM C1017/C1017M.

2.4.6 Vapor retarder or Vapor barrier

ASTM E1745 Class C polyethylene sheeting, minimum 10 mil thickness or other equivalent material with a maximum permeance rating of 0.04 perms per ASTM E96/E96M.

Consider plastic vapor retarders and adhesives with a high recycled content, low toxicity low VOC (Volatile Organic Compounds) levels.

2.4.7 Expansion/Contraction Joint Filler

ASTM D1751 or ASTM D1752 Type I or II. Material must be 1/2 inch thick.

2.5 REINFORCEMENT

2.5.1 Reinforcing Bars

ACI 301 unless otherwise specified. ASTM A615/A615M with the bars marked A, Grade 60; or ASTM A996/A996M with the bars marked R, Grade 60, or marked A, Grade 60. Submit mill certificates for reinforcing bars.

2.5.2 Wire

2.5.2.1 Steel Wire

Wire must conform to ASTM A1064/A1064M.

2.5.3 Reinforcing Bar Supports

Supports include bolsters, chairs, spacers, and other devices necessary for proper spacing, supporting, and fastening reinforcing bars and welded wire reinforcement in place.

Provide wire bar type supports of coated or non-corrodible material conforming to ACI SP-66 and CRSI 10MSP.

Legs of supports in contact with formwork must be hot-dip galvanized, or plastic coated after fabrication, or stainless-steel bar supports.

PART 3 EXECUTION

3.1 EXAMINATION

Do not begin installation until substrates have been properly constructed;

verify that substrates are level.

If substrate preparation is the responsibility of another installer, notify Contracting Officer of unsatisfactory preparation before processing.

Check field dimensions before beginning installation. If dimensions vary too much from design dimensions for proper installation, notify Contracting Officer and wait for instructions before beginning installation.

3.2 PREPARATION

Determine quantity of concrete needed and minimize the production of excess concrete. Designate locations or uses for potential excess concrete before the concrete is poured.

3.2.1 General

Surfaces against which concrete is to be placed must be free of debris, loose material, standing water, snow, ice, and other deleterious substances before start of concrete placing.

Remove standing water without washing over freshly deposited concrete. Divert flow of water through side drains provided for such purpose.

3.2.2 Subgrade Under Foundations and Footings

When subgrade material is semiporous and dry, sprinkle subgrade surface with water as required to eliminate suction at the time concrete is deposited, or seal subgrade surface by covering surface with specified vapor retarder. When subgrade material is porous, seal subgrade surface by covering surface with specified vapor retarder.

3.2.3 Subgrade Under Slabs on Ground

Before construction of slabs on ground, have underground work on pipes and conduits completed and approved.

Previously constructed subgrade or fill must be cleaned of foreign materials.

Finish surface of capillary water barrier under interior slabs on ground must not show deviation in excess of 1/4 inch when tested with a 10-foot straightedge parallel with and at right angles to building lines.

Finished surface of subgrade or fill under exterior slabs on ground must not be more than 0.02-foot above or 0.10-foot below elevation indicated.

3.2.4 Edge Forms and Screed Strips for Slabs

Set edge forms or bulkheads and intermediate screed strips for slabs to obtain indicated elevations and contours in finished slab surface and must be strong enough to support vibrating bridge screeds or roller pipe screeds if nature of specified slab finish requires use of such equipment. Align concrete surface to elevation of screed strips by use of strike-off templates or approved compacting-type screeds.

3.2.5 Reinforcement and Other Embedded Items

Secure reinforcement, joint materials, and other embedded materials in position, inspected, and approved before start of concrete placing.

3.3 FORMS

Provide forms, shoring, and scaffolding for concrete placementin accordance with ACI 301 Section 2 and 5 and ACI 347. Set forms mortar-tight and true to line and grade. Chamfer above grade exposed joints, edges, and external corners of concrete 0.75 inch unless otherwise indicated. Provide formwork with clean-out openings to permit inspection and removal of debris.

3.3.1 Coating

Before concrete placement, coat the contact surfaces of forms with a form release agent.

3.3.2 Reshoring

Reshore concrete elements in accordance with ACI 301 Section 2.

3.3.3 Reuse

Reuse forms providing the structural integrity of concrete and the aesthetics of exposed concrete are not compromised. Wood forms must not be clogged with paste and must be capable of absorbing high water-cementitious material ratio paste.

3.3.4 Form Ties

Provide ties in accordance with ACI 301 section 2.

3.3.5 Tolerances for Form Construction

Construct formwork to ensure that after removal of forms and prior to patching and finishing of formed surfaces, provide concrete surfaces in accordance with tolerances specified in ACI 301 Section 5 and ACI 117.

3.3.6 Removal of Forms and Supports

After placing concrete, removal of forms must be in accordance with ACI 301 Section 2 except as modified by approved form removal schedule.

3.4 PLACING REINFORCEMENT AND MISCELLANEOUS MATERIALS

ACI 301 and ACI SP-66. Provide bars, wire ties, supports, and other devices necessary to install and secure reinforcement. Reinforcement must not have rust, scale, oil, grease, clay, or foreign substances that would reduce the bond. Rusting of reinforcement is a basis of rejection if the effective cross-sectional area or the nominal weight per unit length has been reduced. Remove loose rust prior to placing steel. Tack welding is prohibited.

3.4.1 General

Provide details of reinforcement that are in accordance with ACI 301 and ACI SP-66 and as specified.

3.4.2 Reinforcement Supports

Support reinforcement in accordance with ACI 301 Section 3.

3.4.3 Setting Miscellaneous Material

Place and secure anchors and bolts, pipe sleeves, conduits, and other such items in position before concrete placement and support against displacement. Plumb anchor bolts and check location and elevation. Temporarily fill voids in sleeves with readily removable material to prevent the entry of concrete.

3.4.4 Fabrication

Shop fabricate reinforcing bars to conform to shapes and dimensions indicated for reinforcement, and as follows:

Provide fabrication tolerances that are in accordance with ACI 318 and ACI SP-66.

Provide hooks and bends that are in accordance with ACI 318 and ACI SP-66.

Reinforcement must be bent cold to shapes as indicated. Bending must be done in the shop. Rebending of a reinforcing bar that has been bent incorrectly is not be permitted. Bending must be in accordance with standard approved practice and by approved machine methods.

Deliver reinforcing bars bundled, tagged, and marked. Tags must be metal with bar size, length, mark, and other information pressed in by machine. Marks must correspond with those used on the placing drawings.

Do not use reinforcement that has any of the following defects:

a. Bar lengths, depths, and bends beyond specified fabrication tolerances

b. Bends or kinks not indicated on drawings or approved shop drawings

c. Bars with reduced cross-section due to rusting or other cause

Replace defective reinforcement with new reinforcement having required shape, form, and cross-section area.

3.4.5 Placing Reinforcement

Place reinforcement in accordance with ACI 301 and ACI SP-66.

For slabs on grade (over earth or over capillary water barrier), support bars or welded wire reinforcement on precast concrete blocks, spaced at intervals required by size of reinforcement, to keep reinforcement the minimum height specified above the underside of slab or footing.

Provide reinforcement that is supported and secured together to prevent displacement by construction loads or by placing of wet concrete, and as follows:

Provide supports for reinforcing bars that are sufficient in number and have sufficient strength to carry the reinforcement they support, and in accordance with ACI 318, ACI SP-66 and CRSI 10MSP. Do not use supports to

support runways for concrete conveying equipment and similar construction loads.

Equip supports on ground and similar surfaces with sand-plates.

Support welded wire reinforcement as required for reinforcing bars.

Secure reinforcements to supports by means of tie wire. Wire must be black, soft iron wire, not less than 16 gage.

Reinforcement must be accurately placed, securely tied at intersections, and held in position during placing of concrete by spacers, chairs, or other approved supports. Point wire-tie ends away from the form. Unless otherwise indicated, numbers, type, and spacing of supports must conform to ACI SP-66.

Bending of reinforcing bars partially embedded in concrete is permitted only as specified in ACI SP-66 and ACI 318.

3.4.6 Spacing of Reinforcing Bars

Spacing must be as indicated. If not indicated, spacing must be in accordance with the ACI 318 and ACI SP-66.

Reinforcing bars may be relocated to avoid interference with other reinforcement, or with conduit, pipe, or other embedded items. If any reinforcing bar is moved a distance exceeding one bar diameter or specified placing tolerance, resulting rearrangement of reinforcement is subject to preapproval by the Contracting Officer.

3.4.7 Concrete Protection for Reinforcement

Concrete protection must be in accordance with the ACI 318 and ACI SP-66.

3.4.8 Welding

Welding must be in accordance with AWS D1.4/D1.4M.

3.5 BATCHING, MEASURING, MIXING, AND TRANSPORTING CONCRETE

ASTM C94/C94M, ACI 301, ACI 302.1R and ACI 304R, except as modified herein. Batching equipment must be such that the concrete ingredients are consistently measured within the following tolerances: 1 percent for cement and water, 2 percent for aggregate, and 3 percent for admixtures. Furnish mandatory batch ticket information for each load of ready mix concrete.

3.5.1 Measuring

Make measurements at intervals as specified in paragraphs SAMPLING and TESTING.

3.5.2 Mixing

ASTM C94/C94M, ACI 301 and ACI 304R. Machine mix concrete. Begin mixing within 30 minutes after the cement has been added to the aggregates. Place concrete within 90 minutes of either addition of mixing water to cement and aggregates or addition of cement to aggregates if the air temperature is less than 84 degrees F. Reduce mixing time and place

concrete within 60 minutes if the air temperature is greater than 84 degrees F except as follows: if set retarding admixture is used and slump requirements can be met, limit for placing concrete may remain at 90 minutes. Additional water may be added, provided that both the specified maximum slump and water-cementitious material ratio are not exceeded and the required concrete strength is still met. When additional water is added, an additional 30 revolutions of the mixer at mixing speed is required. If the entrained air content falls below the specified limit, add a sufficient quantity of admixture to bring the entrained air content within the specified limits. Dissolve admixtures in the mixing water and mix in the drum to uniformly distribute the admixture throughout the batch. Do not reconstitute concrete that has begun to solidify.

3.5.3 Transporting

Transport concrete from the mixer to the forms as rapidly as practicable. Prevent segregation or loss of ingredients. Clean transporting equipment thoroughly before each batch. Do not use aluminum pipe or chutes. Remove concrete which has segregated in transporting and dispose of as directed.

3.6 PLACING CONCRETE

Place concrete in accordance with ACI 301 Section 5.

3.6.1 Cold Weather

ACI 306.1. Do not allow concrete temperature to decrease below 50 degrees F. Obtain approval prior to placing concrete when the ambient temperature is below 40 degrees F or when concrete is likely to be subjected to freezing temperatures within 24 hours. Cover concrete and provide sufficient heat to maintain 50 degrees F minimum adjacent to both the formwork and the structure while curing. Limit the rate of cooling to 37 degrees F in any 1 hour and 50 degrees F per 24 hours after heat application.

3.6.2 Hot Weather

Maintain required concrete temperature using Figure 4.2 in ACI 305R to prevent the evaporation rate from exceeding 0.2 pound of water per square foot of exposed concrete per hour. Cool ingredients before mixing or use other suitable means to control concrete temperature and prevent rapid drying of newly placed concrete. Shade the fresh concrete as soon as possible after placing. Start curing when the surface of the fresh concrete is sufficiently hard to permit curing without damage. Provide water hoses, pipes, spraying equipment, and water hauling equipment, where job site is remote to water source, to maintain a moist concrete surface throughout the curing period. Provide burlap cover or other suitable, permeable material with fog spray or continuous wetting of the concrete when weather conditions prevent the use of either liquid membrane curing compound or impervious sheets. For vertical surfaces, protect forms from direct sunlight and add water to top of structure once concrete is set.

3.6.3 Bonding

Surfaces of set concrete at joints, must be roughened and cleaned of laitance, coatings, loose particles, and foreign matter. Roughen surfaces in a manner that exposes the aggregate uniformly and does not leave laitance, loosened particles of aggregate, nor damaged concrete at the surface.

Obtain bonding of fresh concrete that has set as follows:

At joints between footings and walls or columns, between walls or columns and the beams or slabs they support, and elsewhere unless otherwise specified; roughened and cleaned surface of set concrete must be dampened, but not saturated, immediately prior to placing of fresh concrete.

At joints in exposed-to-view work; at vertical joints in walls; at joints near midpoint of span in girders, beams, supported slabs, other structural members; in work designed to contain liquids; the roughened and cleaned surface of set concrete must be dampened but not saturated and covered with a cement grout coating.

Provide cement grout that consists of equal parts of portland cement and fine aggregate by weight with not more than 6 gallons of water per sack of cement. Apply cement grout with a stiff broom or brush to a minimum thickness of 1/16 inch. Deposit fresh concrete before cement grout has attained its initial set.

3.7 WASTE MANAGEMENT

Provide as specified in the Waste Management Plan and as follows.

3.7.1 Mixing Equipment

Before concrete pours, designate for cleaning out concrete mixing trucks. Minimize water used to wash equipment.

3.7.2 Hardened, Cured Waste Concrete

Crush and reuse hardened, cured waste concrete as fill or as a base course for pavement if approved by Contracting Officer.

3.7.3 Reinforcing Steel

Collect reinforcing steel and place in designated area for recycling.

3.7.4 Other Waste

Identify concrete manufacturer's or supplier's policy for collection or return of construction waste, unused material, deconstruction waste, and/or packaging material.

3.8 FLOOR, SLAB, AND PAVEMENT FINISHES AND MISCELLANEOUS CONSTRUCTION

3.8.1 Finish

Place, consolidate, and immediately strike off concrete to obtain proper contour, grade, and elevation before bleedwater appears. Permit concrete to attain a set sufficient for floating and supporting the weight of the finisher and equipment. If bleedwater is present prior to floating the surface, drag the excess water off or remove by absorption with porous materials. Do not use dry cement to absorb bleedwater.

3.8.1.1 Floated

Use for exterior slabs where not otherwise specified. Finish concrete in

accordance with ACI 301 Section 5 for a floated finish.

3.8.1.2 Broomed

Use on surfaces of exterior walks, platforms, patios, and ramps, unless otherwise indicated. Finish concrete in accordance with ACI 301 Section 5 for a broomed finish.

3.9 JOINTS

3.9.1 Isolation Joints in Slabs on Ground

Provide joints at points of contact between slabs on ground and vertical surfaces, such as column pedestals, foundation walls, grade beams, and elsewhere as indicated.

Fill joints with premolded joint filler strips 1/2 inch thick, extending full slab depth. Install filler strips at proper level below finish floor elevation with a slightly tapered, dress-and-oiled wood strip temporarily secured to top of filler strip to form a groove not less than 3/4 inch in depth where joint is sealed with sealing compound and not less than 1/4 inch in depth where joint sealing is not required. Remove wood strip after concrete has set. Contractor must clean groove of foreign matter and loose particles after surface has dried.

3.9.2 Contraction Joints in Slabs on Ground

Provide joints to form panels as indicated.

Under and on exact line of each control joint, cut 50 percent of welded wire reinforcement before placing concrete.

Sawcut contraction joints into slab on ground in accordance with ACI 301 Section 5.

3.9.3 Sealing Joints in Slabs on Ground

Contraction and control joints which are to receive finish flooring material must be sealed with joint sealing compound after concrete curing period. Slightly underfill groove with joint sealing compound to prevent extrusion of compound. Remove excess material as soon after sealing as possible.

Sealed groove must be left ready to receive filling material that is provided as part of finish floor covering work.

3.10 CURING AND PROTECTION

ACI 301 Section 5, unless otherwise specified. Begin curing immediately following form removal. Avoid damage to concrete from vibration created by blasting, pile driving, movement of equipment in the vicinity, disturbance of formwork or protruding reinforcement, and any other activity resulting in ground vibrations. Protect concrete from injurious action by sun, rain, flowing water, frost, mechanical injury, tire marks, and oil stains. Do not allow concrete to dry out from time of placement until the expiration of the specified curing period. Do not use membrane-forming compound on surfaces where appearance would be objectionable, on any surface to be painted, where coverings are to be

bonded to the concrete, or on concrete to which other concrete is to be bonded. If forms are removed prior to the expiration of the curing period, provide another curing procedure specified herein for the remaining portion of the curing period. Provide moist curing for those areas receiving liquid chemical sealer-hardener or epoxy coating. Allow curing compound/sealer installations to cure prior to the installation of materials that adsorb VOCs.

3.10.1 Requirements for Type III, High-Early-Strength Portland Cement

The curing periods are required to be not less than one-fourth of those specified for portland cement, but in no case less than 72 hours.

3.10.2 Curing Periods

ACI 301 Section 5. Begin curing immediately after placement. Protect concrete from premature drying, excessively hot temperatures, and mechanical injury; and maintain minimal moisture loss at a relatively constant temperature for the period necessary for hydration of the cement and hardening of the concrete. The materials and methods of curing are subject to approval by the Contracting Officer.

3.10.3 Curing Formed Surfaces

Accomplish curing of formed surfaces, including undersurfaces of girders, beams, supported slabs, and other similar surfaces by moist curing with forms in place for full curing period or until forms are removed. If forms are removed before end of curing period, accomplish final curing of formed surfaces by any of the curing methods specified above, as applicable.

3.10.4 Curing Unformed Surfaces

Accomplish initial curing of unformed surfaces, such as monolithic slabs, floor topping, and other flat surfaces, by membrane curing.

Unless otherwise specified, accomplish final curing of unformed surfaces by any of curing methods specified, as applicable.

Accomplish final curing of concrete surfaces to receive liquid floor hardener of finish flooring by moisture-retaining cover curing.

3.10.5 Temperature of Concrete During Curing

When temperature of atmosphere is 41 degrees F and below, maintain temperature of concrete at not less than 55 degrees F throughout concrete curing period or 45 degrees F when the curing period is measured by maturity. When necessary, make arrangements before start of concrete placing for heating, covering, insulation, or housing as required to maintain specified temperature and moisture conditions for concrete during curing period.

When the temperature of atmosphere is 80 degrees F and above or during other climatic conditions which cause too rapid drying of concrete, make arrangements before start of concrete placing for installation of wind breaks, of shading, and for fog spraying, wet sprinkling, or moisture-retaining covering of light color as required to protect concrete during curing period.

Changes in temperature of concrete must be uniform and not exceed 37 degrees F in any 1 hour nor 80 degrees F in any 24-hour period.

3.10.6 Protection from Mechanical Injury

During curing period, protect concrete from damaging mechanical disturbances, particularly load stresses, heavy shock, and excessive vibration and from damage caused by rain or running water.

3.10.7 Protection After Curing

Protect finished concrete surfaces from damage by construction operations.

3.11 FIELD QUALITY CONTROL

3.11.1 Sampling

ASTM C172/C172M. Collect samples of fresh concrete to perform tests specified. ASTM C31/C31M for making test specimens.

3.11.2 Testing

3.11.2.1 Slump Tests

ASTM C143/C143M. Take concrete samples during concrete placement/discharge. The maximum slump may be increased as specified with the addition of an approved admixture provided that the water-cementitious material ratio is not exceeded. Perform tests at commencement of concrete placement, when test cylinders are made, and for each batch (minimum) or every 20 cubic yards (maximum) of concrete.

3.11.2.2 Temperature Tests

Test the concrete delivered and the concrete in the forms. Perform tests in hot or cold weather conditions (below 50 degrees F and above 80 degrees F) for each batch (minimum) or every 20 cubic yards (maximum) of concrete, until the specified temperature is obtained, and whenever test cylinders and slump tests are made.

3.11.2.3 Compressive Strength Tests

ASTM C39/C39M. Make six 6 inch by 12 inch test cylinders for each set of tests in accordance with ASTM C31/C31M, ASTM C172/C172M and applicable requirements of ACI 305R and ACI 306R. Take precautions to prevent evaporation and loss of water from the specimen. Test two cylinders at 7 days, two cylinders at 28 days, and hold two cylinder in reserve. Take samples for strength tests of each mix design of concrete placed each day not less than once a day. For the entire project, take no less than five sets of samples and perform strength tests for each mix design of concrete placed. Each strength test result must be the average of two cylinders from the same concrete sample tested at 28 days. Concrete compressive tests must meet the requirements of ACI 318 Section 5.6. Retest locations represented by erratic core strengths. Where retest does not meet concrete compressive strength requirements submit a mitigation or remediation plan for review and approval by the contracting officer. Repair core holes with nonshrink grout. Match color and finish of adjacent concrete.

3.11.2.4 Air Content

ASTM C173/C173M or ASTM C231/C231M for normal weight concrete. Test air-entrained concrete for air content at the same frequency as specified for slump tests.

3.11.2.5 Strength of Concrete Structure

The strength of the concrete structure will be considered to be deficient if any of the following conditions are identified:

Failure to meet compressive strength tests as evaluated

Reinforcement not conforming to requirements specified

Concrete which differs from required dimensions or location in such a manner as to reduce strength

Concrete curing and protection of concrete against extremes of temperature during curing, not conforming to requirements specified

Concrete subjected to damaging mechanical disturbances, particularly load stresses, heavy shock, and excessive vibration

Poor workmanship likely to result in deficient strength

Where the strength of the concrete structure is considered deficient submit a mitigation or remediation plan for review and approval by the contracting officer.

3.11.2.6 Non-Conforming Materials

Factors that indicate that there are non-conforming materials include (but not limited to) excessive compressive strength, inadequate compressive strength, excessive slump, excessive voids and honeycombing, concrete delivery records that indicate excessive time between mixing and placement, or excessive water was added to the mixture during delivery and placement. Any of these indicators alone are sufficient reason for the Contracting Officer to request additional sampling and testing.

Investigations into non-conforming materials must be conducted at the Contractor's expense. The Contractor must be responsible for the investigation and must make written recommendations to adequately mitigate or remediate the non-conforming material. The Contracting Officer may accept, accept with reduced payment, require mitigation, or require removal and replacement of non-conforming material at no additional cost to the Government.

3.12 REPAIR, REHABILITATION AND REMOVAL

Before the Contracting Officer accepts the structure the Contractor must inspect the structure for cracks, damage and substandard concrete placements that may adversely affect the service life of the structure. A report documenting these defects must be prepared which includes recommendations for repair, removal or remediation must be submitted to the Contracting Officer for approval before any corrective work is accomplished.

3.12.1 Crack Repair

Prior to final acceptance, all cracks in excess of 0.02 inches wide must be documented and repaired. The proposed method and materials to repair the cracks must be submitted to the Contracting Officer for approval. The proposal must address the amount of movement expected in the crack due to temperature changes and loading.

3.12.2 Repair of Weak Surfaces

Weak surfaces are defined as mortar-rich, rain-damaged, uncured, or containing exposed voids or deleterious materials. Concrete surfaces with weak surfaces less than 1/4 inch thick must be diamond ground to remove the weak surface. Surfaces containing weak surfaces greater than 1/4 inch thick must be removed and replaced or mitigated in a manner acceptable to the Contracting Officer.

3.12.3 Failure of Quality Assurance Test Results

Proposed mitigation efforts by the Contractor must be approved by the Contracting Officer prior to proceeding.

-- End of Section --

SECTION 05 12 00

STRUCTURAL STEEL
05/14

PART 1 GENERAL

1.1 REFERENCES

The publications listed below form a part of this specification to the extent referenced. The publications are referred to within the text by the basic designation only.

AMERICAN INSTITUTE OF STEEL CONSTRUCTION (AISC)

AISC 201	(2006) AISC Certification Program for Structural Steel Fabricators
AISC 303	(2010) Code of Standard Practice for Steel Buildings and Bridges
AISC 325	(2011) Steel Construction Manual
AISC 326	(2009) Detailing for Steel Construction
AISC 341	(2010) Seismic Provisions for Structural Steel Buildings
AISC 360	(2010) Specification for Structural Steel Buildings
AISC DESIGN GUIDE 10	(1997) Erection Bracing of Low-Rise Structural Steel Buildings

AMERICAN WELDING SOCIETY (AWS)

AWS A2.4	(2012) Standard Symbols for Welding, Brazing and Nondestructive Examination
AWS D1.1/D1.1M	(2010; Errata 2011) Structural Welding Code - Steel

ASME INTERNATIONAL (ASME)

ASME B46.1	(2009) Surface Texture, Surface Roughness, Waviness and Lay

ASTM INTERNATIONAL (ASTM)

ASTM A123/A123M	(2013) Standard Specification for Zinc (Hot-Dip Galvanized) Coatings on Iron and Steel Products
ASTM A143/A143M	(2007; R 2014) Standard Practice for Safeguarding Against Embrittlement of Hot-Dip Galvanized Structural Steel Products and Procedure for Detecting Embrittlement

ASTM A29/A29M	(2013) Standard Specification for General Requirements for Steel Bars, Carbon and Alloy, Hot-Wrought
ASTM A307	(2014) Standard Specification for Carbon Steel Bolts and Studs, 60 000 PSI Tensile Strength
ASTM A325	(2014) Standard Specification for Structural Bolts, Steel, Heat Treated, 120/105 ksi Minimum Tensile Strength
ASTM A36/A36M	(2014) Standard Specification for Carbon Structural Steel
ASTM A490	(2014a) Standard Specification for Structural Bolts, Alloy Steel, Heat Treated, 150 ksi Minimum Tensile Strength
ASTM A500/A500M	(2013) Standard Specification for Cold-Formed Welded and Seamless Carbon Steel Structural Tubing in Rounds and Shapes
ASTM A53/A53M	(2012) Standard Specification for Pipe, Steel, Black and Hot-Dipped, Zinc-Coated, Welded and Seamless
ASTM A563	(2007a; R2014) Standard Specification for Carbon and Alloy Steel Nuts
ASTM A563M	(2007; R 2013) Standard Specification for Carbon and Alloy Steel Nuts (Metric)
ASTM A6/A6M	(2014) Standard Specification for General Requirements for Rolled Structural Steel Bars, Plates, Shapes, and Sheet Piling
ASTM A780/A780M	(2009) Standard Practice for Repair of Damaged and Uncoated Areas of Hot-Dip Galvanized Coatings
ASTM A992/A992M	(2011) Standard Specification for Structural Steel Shapes
ASTM B695	(2004; R 2009) Standard Specification for Coatings of Zinc Mechanically Deposited on Iron and Steel
ASTM C1107/C1107M	(2014) Standard Specification for Packaged Dry, Hydraulic-Cement Grout (Nonshrink)
ASTM C827/C827M	(2010) Change in Height at Early Ages of Cylindrical Specimens from Cementitious Mixtures
ASTM F1554	(2007a; E 2011) Standard Specification for Anchor Bolts, Steel, 36, 55, and 105-ksi

	Yield Strength
ASTM F1852	(2014) Standard Specification for "Twist Off" Type Tension Control Structural Bolt/Nut/Washer Assemblies, Steel, Heat Treated, 120/105 ksi Minimum Tensile Strength
ASTM F2329	(2013) Zinc Coating, Hot-Dip, Requirements for Application to Carbon and Alloy Steel Bolts, Screws, Washers, Nuts, and Special Threaded Fasteners
ASTM F436	(2011) Hardened Steel Washers
ASTM F844	(2007a; R 2013) Washers, Steel, Plain (Flat), Unhardened for General Use
ASTM F959	(2013) Compressible-Washer-Type Direct Tension Indicators for Use with Structural Fasteners

SOCIETY FOR PROTECTIVE COATINGS (SSPC)

SSPC PA 1	(2000; E 2004) Shop, Field, and Maintenance Painting of Steel
SSPC Paint 20	(2002; E 2004) Zinc-Rich Primers (Type I, Inorganic, and Type II, Organic)
SSPC Paint 29	(2002; E 2004) Zinc Dust Sacrificial Primer, Performance-Based
SSPC SP 3	(1982; E 2004) Power Tool Cleaning
SSPC SP 6/NACE No.3	(2007) Commercial Blast Cleaning

U.S. DEPARTMENT OF DEFENSE (DOD)

UFC 3-301-01	(2013; Change 1) Structural Engineering
UFC 3-310-04	(2013) Seismic Design for Buildings

1.2 SUBMITTALS

Government approval is required for submittals with a "G" designation; submittals not having a "G" designation are for Contractor Quality Control approval. Submit the following in accordance with Section 01 33 00 SUBMITTAL PROCEDURES:

SD-01 Preconstruction Submittals

SD-02 Shop Drawings

Fabrication drawings including description of connections; G

SD-03 Product Data

Shop primer

Welding electrodes and rods

Direct Tension Indicator Washers

Non-Shrink Grout

Tension control bolts

SD-06 Test Reports

Class B coating

Bolts, nuts, and washers

Weld Inspection Reports

Direct Tension Indicator Washer Inspection Reports

Bolt Testing Reports

Embrittlement Test Reports

SD-07 Certificates

Steel

Bolts, nuts, and washers

Galvanizing

Welding procedures and qualifications

Welding electrodes and rods

1.3 QUALITY ASSURANCE

1.3.1 Preconstruction Submittals

1.3.1.1 Erection Drawings

Submit for record purposes. Indicate the sequence of erection, temporary shoring and bracing. The erection drawings must conform to AISC 303. Erection drawings must be reviewed, stamped and sealed by a registered professional engineer.

1.3.2 Fabrication Drawing Requirements

Submit fabrication drawings for approval prior to fabrication. Prepare in accordance with AISC 326 and AISC 325. Fabrication drawings must not be reproductions of contract drawings. Sign and seal fabrication drawings by a registered professional engineer. Include complete information for the fabrication and erection of the structure's components, including the location, type, and size of bolts, welds, member sizes and lengths, connection details, blocks, copes, and cuts. Use AWS A2.4 standard welding symbols. Any deviations from the details shown on the contract drawings must be clearly highlighted on the fabrication drawings. Explain the reasons for any deviations from the contract drawings.

1.3.3 Certifications

1.3.3.1 Welding Procedures and Qualifications

Prior to welding, submit certification for each welder stating the type of welding and positions qualified for, the code and procedure qualified under, date qualified, and the firm and individual certifying the qualification tests. If the qualification date of the welding operator is more than one-year old, the welding operator's qualification certificate must be accompanied by a current certificate by the welder attesting to the fact that he has been engaged in welding since the date of certification, with no break in welding service greater than 6 months.

Conform to all requirements specified in AWS D1.1/D1.1M.

PART 2 PRODUCTS

2.1 SYSTEM DESCRIPTION

Provide the structural steel system, including shop primer galvanizing, complete and ready for use. Structural steel systems including design, materials, installation, workmanship, fabrication, assembly, erection, inspection, quality control, and testing must be provided in accordance with AISC 360, AISC 341, UFC 3-301-01 and UFC 3-310-04 except as modified in this contract.

2.2 STEEL

2.2.1 Structural Steel

Wide flange and WT shapes, ASTM A992/A992M. Angles, Channels and Plates, ASTM A36/A36M.

2.2.2 Structural Steel Tubing

ASTM A500/A500M, Grade C .

2.2.3 Steel Pipe

ASTM A53/A53M, Type E or S, Grade B, weight class STD (Standard) .

2.3 BOLTS, NUTS, AND WASHERS

Submit the certified manufacturer's mill reports which clearly show the applicable ASTM mechanical and chemical requirements together with the actual test results for the supplied fasteners.

2.3.1 Common Grade Bolts

2.3.1.1 Bolts

ASTM A307, Grade A. The bolt heads and the nuts of the supplied fasteners must be marked with the manufacturer's identification mark, the strength grade and type specified by ASTM specifications.

2.3.1.2 Nuts

ASTM A563M, Grade A, heavy hex style.

2.3.1.3 Washers

ASTM F844.

2.3.2 High-Strength Bolts

2.3.2.1 Bolts

ASTM A325, Type 1 ASTM A490, Type 1 or 2.

2.3.2.2 Nuts

ASTM A563, Grade and Style as specified in the applicable ASTM bolt standard.

2.3.2.3 Direct Tension Indicator Washers

ASTM F959. Provide ASTM B695, Class 50, Type 1 galvanizing.

2.3.2.4 Washers

ASTM F436, plain carbon steel.

2.3.3 Tension Control Bolts

ASTM F1852, Type 1, heavy-hex head assemblies consisting of steel structural bolts with splined ends, heavy-hex carbon steel nuts, and hardened carbon steel washers. Assembly finish must be mechanically deposited zinc coating.

2.3.4 Foundation Anchorage

2.3.4.1 Anchor Rods

ASTM F1554 Gr 36 , Class 1A .

2.3.4.2 Anchor Nuts

ASTM A563, Grade A, hex style.

2.3.4.3 Anchor Washers

ASTM F844.

2.3.4.4 Anchor Plate Washers

ASTM A36/A36M

2.4 STRUCTURAL STEEL ACCESSORIES

2.4.1 Welding Electrodes and Rods

AWS D1.1/D1.1M.

2.4.2 Non-Shrink Grout

ASTM C1107/C1107M, with no ASTM C827/C827M shrinkage.

2.4.3 Welded Shear Stud Connectors

ASTM A29/A29M, Type B. AWS D1.1/D1.1M.

2.5 GALVANIZING

ASTM F2329 for threaded parts or ASTM A123/A123M for structural steel members, as applicable, unless specified otherwise galvanize after fabrication where practicable.

2.6 FABRICATION

Fabrication must be in accordance with the applicable provisions of AISC 325. Fabrication and assembly must be done in the shop to the greatest extent possible. Punch, subpunch and ream, or drill bolt holes perpendicular to the surface of the member.

Compression joints depending on contact bearing must have a surface roughness not in excess of 500 micro inch as determined by ASME B46.1, and ends must be square within the tolerances for milled ends specified in ASTM A6/A6M.

Shop splices of members between field splices will be permitted only where indicated on the Contract Drawings. Splices not indicated require the approval of the Contracting Officer.

2.6.1 Markings

Prior to erection, members must be identified by a painted erection mark. Connecting parts assembled in the shop for reaming holes in field connections must be match marked with scratch and notch marks. Do not locate erection markings on areas to be welded. Do not locate match markings in areas that will decrease member strength or cause stress concentrations.

2.6.2 Shop Primer

SSPC Paint 20 or SSPC Paint 29, (zinc rich primer). Shop prime structural steel, except as modified herein, in accordance with SSPC PA 1. Do not prime steel surfaces embedded in concrete, galvanized surfaces, or surfaces within 0.5 inch of the toe of the welds prior to welding (except surfaces on which metal decking is to be welded). If flash rusting occurs, re-clean the surface prior to application of primer. Apply primer in accordance with endorsement "P1" of AISC 201 to a minimum dry film thickness of 2.0 mil.

Slip critical surfaces must be primed with a Class B coating in accordance with AISC 325. Submit test report for Class B coating.

Prior to assembly, prime surfaces which will be concealed or inaccessible after assembly. Do not apply primer in foggy or rainy weather; when the ambient temperature is below 45 degrees F or over 95 degrees F; or when the primer may be exposed to temperatures below 40 degrees F within 48 hours after application, unless approved otherwise by the Contracting Officer. Repair damaged primed surfaces with an additional coat of primer.

2.6.2.1 Cleaning

SSPC SP 6/NACE No.3, except steel exposed in spaces above ceilings, attic

spaces, furred spaces, and chases that will be hidden to view in finished construction may be cleaned to SSPC SP 3 when recommended by the shop primer manufacturer. Maintain steel surfaces free from rust, dirt, oil, grease, and other contaminants through final assembly.

2.7 DRAINAGE HOLES

Adequate drainage holes must be drilled to eliminate water traps. Hole diameter must be 1/2 inch and location must be indicated on the detail drawings. Hole size and location must not affect the structural integrity.

PART 3 EXECUTION

3.1 ERECTION

a. Erection of structural steel, except as indicated in item b. below, must be in accordance with the applicable provisions of AISC 325.

b. For low-rise structural steel buildings (60 feet tall or less and a maximum of 2 stories), the structure must be erected in accordance with AISC DESIGN GUIDE 10.

After final positioning of steel members, provide full bearing under base plates and bearing plates using nonshrink grout. Place nonshrink grout in accordance with the manufacturer's instructions.

3.1.1 STORAGE

Material must be stored out of contact with the ground in such manner and location as will minimize deterioration.

3.2 CONNECTIONS

Except as modified in this section, connections not detailed must be designed in accordance with AISC 360. Build connections into existing work. Do not tighten anchor bolts set in concrete with impact torque wrenches. Holes must not be cut or enlarged by burning. Bolts, nuts, and washers must be clean of dirt and rust, and lubricated immediately prior to installation.

3.2.1 Common Grade Bolts

ASTM A307 bolts must be tightened to a "snug tight" fit. "Snug tight" is the tightness that exists when plies in a joint are in firm contact. If firm contact of joint plies cannot be obtained with a few impacts of an impact wrench, or the full effort of a man using a spud wrench, contact the Contracting Officer for further instructions.

3.2.2 High-Strength Bolts

Provide direct tension indicator washers in all ASTM A325 and ASTM A490 bolted connections. Bolts must be installed in connection holes and initially brought to a snug tight fit. After the initial tightening procedure, bolts must then be fully tensioned, progressing from the most rigid part of a connection to the free edges.

3.2.2.1 Installation of Direct Tension Indicator Washers (DTIW)

Where possible, the DTIW must be installed under the bolt head and the nut

must be tightened. If the DTIW is installed adjacent to the turned element, provide a flat washer between the DTIW and nut when the nut is turned for tightening, and between the DTIW and bolt head when the bolt head is turned for tightening. In addition to the LIW, provide flat washers under both the bolt head and nut when ASTM A490 bolts are used.

3.2.3 Tension Control Bolts

Bolts must be installed in connection holes and initially brought to a snug tight fit. After the initial tightening procedure, bolts must then be fully tensioned, progressing from the most rigid part of a connection to the free edges.

3.3 GAS CUTTING

Use of gas-cutting torch in the field for correcting fabrication errors will not be permitted on any major member in the structural framing. Use of a gas cutting torch will be permitted on minor members not under stress only after approval has been obtained from the Contracting Officer.

3.4 WELDING

Welding must be in accordance with AWS D1.1/D1.1M. Provide AWS D1.1/D1.1M qualified welders, welding operators, and tackers.

Develop and submit the Welding Procedure Specifications (WPS) for all welding, including welding done using prequalified procedures. Prequalified procedures may be submitted for information only; however, procedures that are not prequalified must be submitted for approval.

3.4.1 Removal of Temporary Welds, Run-Off Plates, and Backing Strips

Removal is not required .

3.5 SHOP PRIMER REPAIR

Repair shop primer in accordance with the paint manufacturer's recommendation for surfaces damaged by handling, transporting, cutting, welding, or bolting.

3.5.1 Field Priming

Steel exposed to the weather, or located in building areas without HVAC for control of relative humidity must be field primed. After erection, the field bolt heads and nuts, field welds, and any abrasions in the shop coat must be cleaned and primed with paint of the same quality as that used for the shop coat.

3.6 GALVANIZING REPAIR

Repair damage to galvanized coatings using ASTM A780/A780M zinc rich paint for galvanizing damaged by handling, transporting, cutting, welding, or bolting. Do not heat surfaces to which repair paint has been applied.

3.7 FIELD QUALITY CONTROL

Perform field tests, and provide labor, equipment, and incidentals required for testing. The Contracting Officer must be notified in writing of defective welds, bolts, nuts, and washers within 7 working days of the

date of the inspection.

3.7.1 Welds

3.7.1.1 Visual Inspection

AWS D1.1/D1.1M. Furnish the services of AWS-certified welding inspectors for fabrication and erection inspection and testing and verification inspections.

Inspect proper preparation, size, gaging location, and acceptability of welds; identification marking; operation and current characteristics of welding sets in use.

3.7.1.2 Nondestructive Testing

Nondestructive testing must be in accordance with AWS D1.1/D1.1M. Test locations must be as indicated . If more than 20 percent of welds made by a welder contain defects identified by testing, then all welds made by that welder must be tested by ultrasonic testing, as approved by the Contracting Officer. When all welds made by an individual welder are required to be tested, magnetic particle testing must be used only in areas inaccessible to ultrasonic testing. Retest defective areas after repair. Submit weld inspection reports.

Testing frequency: Provide the following types and number of tests:

Test Type	Number of Tests
Ultrasonic	
Magnetic Particle	
Dye Penetrant	

3.7.2 Direct Tension Indicator Washers

3.7.2.1 Direct Tension Indicator Washer Compression

Direct tension indicator washers must be tested in place to verify that they have been compressed sufficiently to provide the 0.015 inch gap when the direct tension indicator washer is placed under the bolt head and the nut is tightened, and to provide the 0.005 inch gap when the direct tension indicator washer is placed under the turned element, as required by ASTM F959. Submit direct tension indicator washer inspection reports.

3.7.3 High-Strength Bolts

3.7.3.1 Testing Bolt, Nut, and Washer Assemblies

Test a minimum of 3 bolt, nut, and washer assemblies from each mill certificate batch in a tension measuring device at the job site prior to the beginning of bolting start-up. Demonstrate that the bolts and nuts, when used together, can develop tension not less than the provisions specified in AISC 360, depending on bolt size and grade. The bolt tension must be developed by tightening the nut. A representative of the manufacturer or supplier must be present to ensure that the fasteners are properly used, and to demonstrate that the fastener assemblies supplied

satisfy the specified requirements. Submit bolt testing reports.

3.7.3.2 Inspection

Inspection procedures must be in accordance with AISC 360. Confirm and report to the Contracting Officer that the materials meet the project specification and that they are properly stored. Confirm that the faying surfaces have been properly prepared before the connections are assembled. Observe the specified job site testing and calibration, and confirm that the procedure to be used provides the required tension. Monitor the work to ensure the testing procedures are routinely followed on joints that are specified to be fully tensioned.

Inspect calibration of torque wrenches for high-strength bolts.

3.7.3.3 Testing

The Government has the option to perform nondestructive tests on 5 percent of the installed bolts to verify compliance with pre-load bolt tension requirements. Provide the required access for the Government to perform the tests. The nondestructive testing will be done in-place using an ultrasonic measuring device or any other device capable of determining in-place pre-load bolt tension. The test locations must be selected by the Contracting Officer. If more than 10 percent of the bolts tested contain defects identified by testing, then all bolts used from the batch from which the tested bolts were taken, must be tested at the Contractor's expense. Retest new bolts after installation at the Contractor's expense.

3.7.4 Testing for Embrittlement

ASTM A143/A143M for steel products hot-dip galvanized after fabrication. Submit embrittlement test reports.

-- End of Section --

SECTION 05 50 13

MISCELLANEOUS METAL FABRICATIONS
05/10

PART 1 GENERAL

1.1 REFERENCES

The publications listed below form a part of this specification to the extent referenced. The publications are referred to within the text by the basic designation only.

ALUMINUM ASSOCIATION (AA)

AA DAF45	(2003; Reaffirmed 2009) Designation System for Aluminum Finishes

AMERICAN INSTITUTE OF STEEL CONSTRUCTION (AISC)

AISC 303	(2010) Code of Standard Practice for Steel Buildings and Bridges

AMERICAN WELDING SOCIETY (AWS)

AWS D1.1/D1.1M	(2010; Errata 2011) Structural Welding Code - Steel

ASME INTERNATIONAL (ASME)

ASME B18.2.1	(2012; Errata 2013) Square and Hex Bolts and Screws (Inch Series)
ASME B18.2.2	(2010) Nuts for General Applications: Machine Screw Nuts, Hex, Square, Hex Flange, and Coupling Nuts (Inch Series)
ASME B18.21.1	(2009) Washers: Helical Spring-Lock, Tooth Lock, and Plain Washers (Inch Series)
ASME B18.6.2	(1998; R 2010) Slotted Head Cap Screws, Square Head Set Screws, and Slotted Headless Set Screws: Inch Series
ASME B18.6.3	(2013) Machine Screws, Tapping Screws, and Machine Drive Screws (Inch Series)

ASTM INTERNATIONAL (ASTM)

ASTM A123/A123M	(2013) Standard Specification for Zinc (Hot-Dip Galvanized) Coatings on Iron and Steel Products
ASTM A153/A153M	(2009) Standard Specification for Zinc Coating (Hot-Dip) on Iron and Steel Hardware

ASTM A307	(2014) Standard Specification for Carbon Steel Bolts and Studs, 60 000 PSI Tensile Strength
ASTM A36/A36M	(2014) Standard Specification for Carbon Structural Steel
ASTM A47/A47M	(1999; R 2014) Standard Specification for Ferritic Malleable Iron Castings
ASTM A500/A500M	(2013) Standard Specification for Cold-Formed Welded and Seamless Carbon Steel Structural Tubing in Rounds and Shapes
ASTM A53/A53M	(2012) Standard Specification for Pipe, Steel, Black and Hot-Dipped, Zinc-Coated, Welded and Seamless
ASTM A653/A653M	(2013) Standard Specification for Steel Sheet, Zinc-Coated (Galvanized) or Zinc-Iron Alloy-Coated (Galvannealed) by the Hot-Dip Process
ASTM A780/A780M	(2009) Standard Practice for Repair of Damaged and Uncoated Areas of Hot-Dip Galvanized Coatings
ASTM A924/A924M	(2014) Standard Specification for General Requirements for Steel Sheet, Metallic-Coated by the Hot-Dip Process
ASTM B209	(2014) Standard Specification for Aluminum and Aluminum-Alloy Sheet and Plate
ASTM B221	(2014) Standard Specification for Aluminum and Aluminum-Alloy Extruded Bars, Rods, Wire, Profiles, and Tubes
ASTM C1513	(2013) Standard Specification for Steel Tapping Screws for Cold-Formed Steel Framing Connections
ASTM D1187/D1187M	(1997; E 2011; R 2011) Asphalt-Base Emulsions for Use as Protective Coatings for Metal
ASTM E488/E488M	(2010) Standard Test Methods for Strength of Anchors in Concrete and Masonry Elements

MASTER PAINTERS INSTITUTE (MPI)

MPI 79	(Oct 2009) Alkyd Anti-Corrosive Metal Primer

OCCUPATIONAL SAFETY AND HEALTH STANDARDS (OSHA)

OSHA 1910.27	(2015) Minimum Standards for Ladders

SOCIETY FOR PROTECTIVE COATINGS (SSPC)

SSPC SP 3	(1982; E 2004) Power Tool Cleaning
SSPC SP 6/NACE No.3	(2007) Commercial Blast Cleaning

1.2 SUBMITTALS

Government approval is required for submittals with a "G" designation; submittals not having a "G" designation are for information only. When used, a designation following the "G" designation identifies the office that will review the submittal for the Government. Submit the following in accordance with Section 01 33 00 SUBMITTAL PROCEDURES:

SD-02 Shop Drawings

Roof Access Ladders, plans, elevations, sections and details of metal fabrications and their connections.

Submit fabrication drawings showing layout(s), connections to structural system, and anchoring details as specified in AISC 303.

Submit templates, erection and installation drawings indicating thickness, type, grade, class of metal, and dimensions. Show construction details, reinforcement, anchorage, and installation with relation to the building construction.

SD-03 Product Data

Roof Access Ladders

1.3 QUALIFICATION OF WELDERS

Qualify welders in accordance with AWS D1.1/D1.1M. Use procedures, materials, and equipment of the type required for the work.

1.4 DELIVERY, STORAGE, AND PROTECTION

Protect from corrosion, deformation, and other types of damage. Store items in an enclosed area free from contact with soil and weather. Remove and replace damaged items with new items.

1.5 QUALITY ASSURANCE, Roof Access Ladders

(1) Manufacturer qualifications: A firm with experience producing aluminum metal ladders similar to those indicated for this project.

a. Record of successful in-service performance.

b. Professional engineering competent in design and structural analysis to fabricate ladders in compliance with industry standards and local codes.

(2) Installer Qualifications: Competent and experienced firm capable of selecting fasteners and installing ladders to attain designed operational and structural performance.

(3) Product Qualification: Product design shall comply with OSHA 1910.27 minimum standards for ladders.

1.6 Warranty

(1) Manufacturer has responsibility for an extended Corrective Period for work of this section for a period of 5 years, commencing on the shipment date of the product against all the conditions indicated below, and when notified in writing from Owner, manufacturer shall promptly and without inconvenience and without cost to Owner correct said deficiencies.

a. Defects in materials and workmanship.

b. Deterioration of material and surface performance below minimum OSHA standards as certified by independent third party testing laboratory. Ordinary wear and tear, unusual abuse or neglect excepted.

Within the warranty period, the manufacturer shall, at its option, repair, replace, or refund the purchase price of defective ladder.

(2) Manufacturer shall be notified immediately of defective products, and be given a reasonable opportunity to inspect the goods prior to return. Manufacturer will not assume responsibility, or compensation for unauthorized repairs or labor. Manufacturer makes no other warranty, expressed or implied to the merchantability, fitness for a particular purpose, design, sale, installation, or use, of the ladder; and shall not be liable for incidental or consequential damages, losses of or expenses resulting from the use of ladder products.

PART 2 PRODUCTS

2.1 MATERIALS

2.1.1 Structural Carbon Steel

ASTM A36/A36M.

2.1.2 Structural Tubing

ASTM A500/A500M.

2.1.3 Steel Pipe

ASTM A53/A53M, Type E or S, Grade B.

2.1.4 Fittings for Steel Pipe

Standard malleable iron fittings ASTM A47/A47M.

2.1.5 Anchor Bolts

ASTM A307. Where exposed, shall be of the same material, color, and finish as the metal to which applied.

2.1.5.1 Expansion Anchors Sleeve Anchors Adhesive Anchors

Provide expansion anchorssleeve anchorsadhesive anchors as required. Minimum concrete embedment shall beas required. Design values listed shall be as tested according to ASTM E488/E488M.

2.1.5.2 Lag Screws and Bolts

ASME B18.2.1, type and grade best suited for the purpose.

2.1.5.3 Bolts, Nuts, Studs and Rivets

ASME B18.2.2 or ASTM A307.

2.1.5.4 Screws

ASME B18.2.1, ASME B18.6.2, ASME B18.6.3 and ASTM C1513.

2.1.5.5 Washers

Provide plain washers to conform to ASME B18.21.1. Provide beveled washers for American Standard beams and channels, square or rectangular, tapered in thickness, and smooth. Provide lock washers to conform to ASME B18.21.1.

2.2 FABRICATION FINISHES

2.2.1 Galvanizing

Hot-dip galvanize items specified to be zinc-coated, after fabrication where practicable. Galvanizing: ASTM A123/A123M, ASTM A153/A153M, ASTM A653/A653M or ASTM A924/A924M, G90, as applicable.

2.2.2 Galvanize

Anchor bolts, grating fasteners, washers, and parts or devices necessary for proper installation, unless indicated otherwise.

2.2.3 Repair of Zinc-Coated Surfaces

Repair damaged surfaces with galvanizing repair method and paint conforming to ASTM A780/A780M or by application of stick or thick paste material specifically designed for repair of galvanizing, as approved by Contracting Officer. Clean areas to be repaired and remove slag from welds. Heat surfaces to which stick or paste material is applied, with a torch to a temperature sufficient to melt the metallics in stick or paste; spread molten material uniformly over surfaces to be coated and wipe off excess material.

2.2.4 Shop Cleaning and Painting

2.2.4.1 Surface Preparation

Blast clean surfaces in accordance with SSPC SP 6/NACE No.3. Surfaces that will be exposed in spaces above ceiling or in attic spaces, crawl spaces, furred spaces, and chases may be cleaned in accordance with SSPC SP 3 in lieu of being blast cleaned. Wash cleaned surfaces which become contaminated with rust, dirt, oil, grease, or other contaminants with solvents until thoroughly clean. Steel to be embedded in concrete shall be free of dirt and grease. Do not paint or galvanize bearing surfaces, including contact surfaces within slip critical joints, but coat with rust preventative applied in the shop.

2.2.4.2 Pretreatment, Priming and Painting

Apply pretreatment, primer, and paint in accordance with manufacturer's printed instructions. On surfaces concealed in the finished construction or not accessible for finish painting, apply an additional prime coat to a minimum dry film thickness of 1.0 mil. Tint additional prime coat with a small amount of tinting pigment.

2.2.5 Nonferrous Metal Surfaces

Protect by plating, anodic, or organic coatings.

2.2.6 Aluminum Surfaces

2.2.6.1 Surface Condition

Before finishes are applied, remove roll marks, scratches, rolled-in scratches, kinks, stains, pits, orange peel, die marks, structural streaks, and other defects which will affect uniform appearance of finished surfaces.

2.2.6.2 Aluminum Finishes

Unexposed sheet, plate and extrusions may have mill finish as fabricated. Sandblast castings' finish, medium, AA DAF45. Unless otherwise specified, provide all other aluminum items with a standard mill finish. Provide a coating thickness not less than that specified for protective and decorative type finishes for items used in interior locations or architectural Class I type finish for items used in exterior locations in AA DAF45. Provide a polished satin finish on items to be anodized.

2.3 ROOF ACCESS LADDER

(1) Hatch rail system shall satisfy the requirements of OSHA 29 CFR 1910.23 and shall meet OSHA strength requirements with a factor of safety of two.

(2) Rungs: Not less than 1-1/4 inches in section and 18 -3/8 inches long, formed from tubular aluminum extrusions. Squared and deeply serrated on all sides.

a. Rungs shall withstand a 1,500 pound load without deformation or failure.

(3) Channel Side Rails: Not less than 1/8 inch wall thickness by 3 inches wide.

(4) Heavy Duty Tubular Side Rails: Assembled from two interlocking aluminum extrusions no less than 1/8 inch wall thickness by 3 inches wide. Construction shall be self-locking stainless steel fasteners, full penetration TIG welds and clean, smooth and burr-free surfaces.

(5) Landing Platform: 1-1/2 inches or greater diameter, tubular aluminum guardrails and decks of serrated aluminum treads.

(6) Fixed Access Ladder: Tubular Rail Low Parapet Access Ladder with Platform.

(7) Finish: Clear Anodic Factory Finish: AA-M10C22A41 Mechanical

finish as fabricated. Architectural Class I, clear coating 0.018 mm or thicker.

(8) Aluminum Sheet: Alloy 5005-H34 to comply with ASTM B209.

(9) Aluminum Extrusions: Alloy 6063-T6 to comply with ASTM B221.

(10) General: Provide materials and types of fasteners, protective coatings, sealants, and other miscellaneous items required by manufacturer for a complete installation.

PART 3 EXECUTION

3.1 GENERAL INSTALLATION REQUIREMENTS

Install items at locations indicated, according to manufacturer's instructions. Verify all measurements and take all field measurements necessary before fabrication. Exposed fastenings shall be compatible materials, shall generally match in color and finish, and harmonize with the material to which fastenings are applied. Include materials and parts necessary to complete each item, even though such work is not definitely shown or specified. Poor matching of holes for fasteners shall be cause for rejection. Conceal fastenings where practicable. Thickness of metal and details of assembly and supports shall provide strength and stiffness. Form joints exposed to the weather shall be formed to exclude water. Items listed below require additional procedures.

3.2 WORKMANSHIP

Provide miscellaneous metalwork that is well formed to shape and size, with sharp lines and angles and true curves. Drilling and punching shall produce clean true lines and surfaces. Provide continuous welding along the entire area of contact except where tack welding is permitted. Do not tack weld exposed connections of work in place and ground smooth. Provide a smooth finish on exposed surfaces of work in place and unless otherwise approved, flush exposed riveting. Mill joints where tight fits are required. Corner joints shall be coped or mitered, well formed, and in true alignment. Accurately set work to established lines and elevations and securely fastened in place. Install in accordance with manufacturer's installation instructions and approved drawings, cuts, and details.

3.3 ANCHORAGE, FASTENINGS, AND CONNECTIONS

Provide anchorage where necessary for fastening miscellaneous metal items securely in place. Include for anchorage not otherwise specified or indicated slotted inserts, expansion shields, and powder-driven fasteners, when approved for concrete; toggle bolts and through bolts for masonry; machine and carriage bolts for steel; through bolts, lag bolts, and screws for wood. Do not use wood plugs in any material. Provide non-ferrous attachments for non-ferrous metal. Make exposed fastenings of compatible materials, generally matching in color and finish, to which fastenings are applied. Conceal fastenings where practicable.

3.4 BUILT-IN WORK

Form for anchorage metal work built-in with concrete or masonry, or provide with suitable anchoring devices as indicated or as required. Furnish metal work in ample time for securing in place as the work progresses.

3.5 WELDING

Perform welding, welding inspection, and corrective welding, in accordance with AWS D1.1/D1.1M. Use continuous welds on all exposed connections. Grind visible welds smooth in the finished installation.

3.6 FINISHES

3.6.1 Dissimilar Materials

Where dissimilar metals are in contact, protect surfaces with a coat conforming to MPI 79 to prevent galvanic or corrosive action. Where aluminum is in contact with concrete, plaster, mortar, masonry, wood, or absorptive materials subject to wetting, protect with ASTM D1187/D1187M, asphalt-base emulsion.

3.6.2 Field Preparation

Remove rust preventive coating just prior to field erection, using a remover approved by the rust preventive manufacturer. Surfaces, when assembled, shall be free of rust, grease, dirt and other foreign matter.

3.6.3 Environmental Conditions

Do not clean or paint surface when damp or exposed to foggy or rainy weather, when metallic surface temperature is less than 5 degrees F above the dew point of the surrounding air, or when surface temperature is below 45 degrees F or over 95 degrees F, unless approved by the Contracting Officer.

3.7 CLEANING

A. Clean exposed surfaces according to manufacturer's written instructions.

B. Clean off excess sealants.

3.8 ACCESS PANELS

Install a removable access panel not less than 12 by 12 inches directly below each valve, flow indicator, damper, or air splitter that is located above the ceiling, other than an acoustical ceiling, and that would otherwise not be accessible.

3.9 ROOF ACCESS LADDER

(1) Install products in strict accordance with manufacturer's instructions and approved submittals.

a. Test units for proper function and adjust until proper operation is achieved.

b. Repair finishes damaged during installation.

c. Restore finishes so no evidence remains of corrective work.

d. Install roof accessories level, plumb, true to line and elevation, and without warping, jogs in alignment, excessive oil canning, buckling, or tool marks.

e. Anchor roof accessories securely in place so they are capable of resisting indicated loads.

f. Use fasteners, separators, sealants, and other miscellaneous items as required to complete installation of roof accessories and fit them to substrates.

g. Install roof accessories to resist exposure to weather without failing, rattling, leaking, or loosening of fasteners and seals.

(2) Metal Protection: Protect metals against galvanic action by separating dissimilar metals from contact with each other or with corrosive substrates by painting contact surfaces with bituminous coating or by other permanent separation as recommended by manufacturer.

a. Coat concealed side of uncoated aluminum roof accessories with bituminous coating where in contact with wood, ferrous metal, or cementitious construction.

b. Underlayment: Where installing roof accessories directly on cementitious or wood substrates, install a course of felt underlayment and cover with a slip sheet, or install a course of polyethylene sheet.

c. Bed flanges in thick coat of asphalt roofing cement where required by manufacturers of roof accessories for waterproof performance.

-- End of Section --

SECTION 07 60 00

FLASHING AND SHEET METAL
08/08

PART 1 GENERAL

1.1 REFERENCES

The publications listed below form a part of this specification to the extent referenced. The publications are referred to within the text by the basic designation only.

AMERICAN WELDING SOCIETY (AWS)

AWS D1.2/D1.2M	(2014) Structural Welding Code - Aluminum

ASTM INTERNATIONAL (ASTM)

ASTM A167	(2011) Standard Specification for Stainless and Heat-Resisting Chromium-Nickel Steel Plate, Sheet, and Strip
ASTM A308/A308M	(2010) Standard Specification for Steel Sheet, Terne (Lead-Tin Alloy) Coated by the Hot Dip Process
ASTM A653/A653M	(2013) Standard Specification for Steel Sheet, Zinc-Coated (Galvanized) or Zinc-Iron Alloy-Coated (Galvannealed) by the Hot-Dip Process
ASTM B101	(2012) Standard Specification for Lead-Coated Copper Sheet and Strip for Building Construction
ASTM B209	(2014) Standard Specification for Aluminum and Aluminum-Alloy Sheet and Plate
ASTM B221	(2014) Standard Specification for Aluminum and Aluminum-Alloy Extruded Bars, Rods, Wire, Profiles, and Tubes
ASTM B32	(2008; R 2014) Standard Specification for Solder Metal
ASTM B370	(2012) Standard Specification for Copper Sheet and Strip for Building Construction
ASTM B69	(2013) Standard Specification for Rolled Zinc
ASTM D1784	(2011) Standard Specification for Rigid Poly(Vinyl Chloride) (PVC) Compounds and Chlorinated Poly(Vinyl Chloride) (CPVC) Compounds

ASTM D41/D41M	(2011) Asphalt Primer Used in Roofing, Dampproofing, and Waterproofing
ASTM D4586/D4586M	(2007; E 2012; R 2012) Asphalt Roof Cement, Asbestos-Free

SHEET METAL AND AIR CONDITIONING CONTRACTORS' NATIONAL ASSOCIATION (SMACNA)

SMACNA 1793	(2012) Architectural Sheet Metal Manual, 7th Edition

1.2 GENERAL REQUIREMENTS

Finished sheet metalwork will form a weathertight construction without waves, warps, buckles, fastening stresses or distortion, which allows for expansion and contraction. Sheet metal mechanic is responsible for cutting, fitting, drilling, and other operations in connection with sheet metal required to accommodate the work of other trades. Coordinate installation of sheet metal items used in conjunction with roofing with roofing work to permit continuous roofing operations.

1.3 SUBMITTALS

Government approval is required for submittals with a "G" designation; submittals not having a "G" designation are for Contractor Quality Control approval. Submit the following in accordance with Section 01 33 00 SUBMITTAL PROCEDURES:

SD-02 Shop Drawings

Covering on flat, sloped, or curved surfaces; G

Expansion joints; G

Base flashing; G

Counterflashing; G

Flashing at roof penetrations; G

Reglets; GCopings; G

Indicate thicknesses, dimensions, fastenings and anchoring methods, expansion joints, and other provisions necessary for thermal expansion and contraction. Scaled manufacturer's catalog data may be submitted for factory fabricated items.

SD-11 Closeout Submittals

Quality Control Plan

Submit for sheet metal work in accordance with paragraph entitled "Field Quality Control."

1.4 DELIVERY, HANDLING, AND STORAGE

Package and protect materials during shipment. Uncrate and inspect materials for damage, dampness, and wet-storage stains upon delivery to the job site. Remove from the site and replace damaged materials that cannot be restored to like-new condition. Handle sheet metal items to avoid damage to surfaces, edges, and ends. Store materials in dry, weather-tight, ventilated areas until immediately before installation.

PART 2 PRODUCTS

2.1 MATERIALS

Do not use lead, lead-coated metal, or galvanized steel. Use any metal listed by SMACNA Arch. Manual for a particular item, unless otherwise specified or indicated. Conform to the requirements specified and to the thicknesses and configurations established in SMACNA Arch. Manual for the materials. Different items need not be of the same metal, except that if copper is selected for any exposed item, all exposed items must be copper.

Furnish sheet metal items in 8 to 10 foot lengths. Single pieces less than 8 feet long may be used to connect to factory-fabricated inside and outside corners, and at ends of runs. Factory fabricate corner pieces with minimum 12 inch legs. Provide accessories and other items essential to complete the sheet metal installation. Provide accessories made of the same or compatible materials as the items to which they are applied. Fabricate sheet metal items of the materials specified below and to the gage, thickness, or weight shown in Table I at the end of this section. Provide sheet metal items with mill finish unless specified otherwise. Where more than one material is listed for a particular item in Table I, each is acceptable and may be used except as follows:

2.1.1 Exposed Sheet Metal Items

Must be of the same material. Consider the following as exposed sheet metal: gutters, including hangers; downspouts; gravel stops and fascias; cap, valley, steeped, base, and eave flashings and related accessories.

2.1.2 Drainage

Do not use copper for an exposed item if drainage from that item will pass over exposed masonry, stonework or other metal surfaces. In addition to the metals listed in Table I, lead-coated copper may be used for such items.

2.1.3 Copper, Sheet and Strip

ASTM B370, cold-rolled temper, H 00 (standard).

2.1.4 Lead-Coated Copper Sheet

ASTM B101.

2.1.5 Lead Sheet

Minimum weight 4 pounds per square foot.

2.1.6 Steel Sheet, Zinc-Coated (Galvanized)

ASTM A653/A653M.

2.1.6.1 Finish

Exposed exterior items of zinc-coated steel sheet must have a baked-on, factory-applied color coating of polyvinylidene fluoride or other equivalent fluorocarbon coating applied after metal substrates have been cleaned and pretreated. Provide finish coating dry-film thickness of 0.8 to 1.3 mils and color to be determined.

2.1.7 Zinc Sheet and Strip

ASTM B69, Type I, a minimum of 0.024 inch thick.

2.1.8 Stainless Steel

ASTM A167, Type 302 or 304, 2D Finish, fully annealed, dead-soft temper.

2.1.9 Terne-Coated Steel

Minimum of 14 by 20 inch with minimum of 40 pound coating per double base box. ASTM A308/A308M.

2.1.10 Aluminum Alloy Sheet and Plate

ASTM B209 anodized clear form alloy, and temper appropriate for use.

2.1.10.1 Alclad

When fabricated of aluminum, fabricate the items Alclad 3003, Alclad 3004, Alclad 3005, clad on as indicated.

a. Flashing

2.1.10.2 Finish

Exposed exterior sheet metal items of aluminum must have a baked-on, factory-applied color coating of polyvinylidene fluoride (PVF2) or other equivalent fluorocarbon coating applied after metal substrates have been cleaned and pretreated. Provide finish coating dry-film thickness of 0.8 to 1.3 mils and color to be determined.

2.1.11 Aluminum Alloy, Extruded Bars, Rods, Shapes, and Tubes

ASTM B221.

2.1.12 Solder

ASTM B32, 95-5 tin-antimony.

2.1.13 Polyvinyl Chloride Reglet

ASTM D1784, Type II, Grade 1, Class 14333-D, 0.075 inch minimum thickness.

2.1.14 Bituminous Plastic Cement

ASTM D4586/D4586M, Type I.

2.1.15 Asphalt Primer

ASTM D41/D41M.

2.1.16 Fasteners

Use the same metal or a metal compatible with the item fastened. Use stainless steel fasteners to fasten dissimilar materials.

PART 3 EXECUTION

3.1 INSTALLATION

3.1.1 Metal Roofing

3.1.2 Workmanship

Make lines and angles sharp and true. Free exposed surfaces from visible wave, warp, buckle, and tool marks. Fold back exposed edges neatly to form a 1/2 inch hem on the concealed side. Make sheet metal exposed to the weather watertight with provisions for expansion and contraction.

Make surfaces to receive sheet metal plumb and true, clean, even, smooth, dry, and free of defects and projections. For installation of items not shown in detail or not covered by specifications conform to the applicable requirements of SMACNA 1793, Architectural Sheet Metal Manual. Provide sheet metal flashing in the angles formed where roof decks abut walls, curbs, ventilators, pipes, or other vertical surfaces and wherever indicated and necessary to make the work watertight. Join sheet metal items together as shown in Table II.

3.1.3 Nailing

Confine nailing of sheet metal generally to sheet metal having a maximum width of 18 inch. Confine nailing of flashing to one edge only. Space nails evenly not over 3 inch on center and approximately 1/2 inch from edge unless otherwise specified or indicated. Face nailing will not be permitted. Where sheet metal is applied to other than wood surfaces, include in shop drawings, the locations for sleepers and nailing strips required to secure the work.

3.1.4 Cleats

Provide cleats for sheet metal 18 inch and over in width. Space cleats evenly not over 12 inch on center unless otherwise specified or indicated. Unless otherwise specified, provide cleats of 2 inch wide by 3 inch long and of the same material and thickness as the sheet metal being installed. Secure one end of the cleat with two nails and the cleat folded back over the nailheads. Lock the other end into the seam. Where the fastening is to be made to concrete or masonry, use screws and drive in expansion shields set in concrete or masonry. Pretin cleats for soldered seams.

3.1.5 Bolts, Rivets, and Screws

Install bolts, rivets, and screws where indicated or required. Provide compatible washers where required to protect surface of sheet metal and to provide a watertight connection. Provide mechanically formed joints in

aluminum sheets 0.040 inch or less in thickness.

3.1.6 Seams

Straight and uniform in width and height with no solder showing on the face.

3.1.6.1 Flat-lock Seams

Finish not less than 3/4 inch wide.

3.1.6.2 Lap Seams

Finish soldered seams not less than one inch wide. Overlap seams not soldered, not less than 3 inch.

3.1.6.3 Loose-Lock Expansion Seams

Not less than 3 inch wide; provide minimum one inch movement within the joint. Completely fill the joints with the specified sealant, applied at not less than 1/8 inch thick bed.

3.1.6.4 Flat Seams

Make seams in the direction of the flow.

3.1.7 Soldering

Where soldering is specified, apply to copper, terne-coated stainless steel, zinc-coated steel, and stainless steel items. Pretin edges of sheet metal before soldering is begun. Seal the joints in aluminum sheets of 0.040 inch or less in thickness with specified sealants. Do not solder aluminum.

3.1.7.1 Edges

Scrape or wire-brush the edges of lead-coated material to be soldered to produce a bright surface. Flux brush the seams in before soldering. Treat with soldering acid flux the edges of stainless steel to be pretinned. Seal the joints in aluminum sheets of 0.040 inch or less in thickness with specified sealants. Do not solder aluminum.

3.1.8 Welding and Mechanical Fastening

Use welding for aluminum of thickness greater than 0.040 inch. Aluminum 0.040 inch or less in thickness must be butted and the space backed with formed flashing plate; or lock joined, mechanically fastened, and filled with sealant as recommended by the aluminum manufacturer.

3.1.8.1 Welding of Aluminum

Use welding of the inert gas, shield-arc type. For procedures, appearance and quality of welds, and the methods used in correcting welding work, conform to AWS D1.2/D1.2M.

3.1.8.2 Mechanical Fastening of Aluminum

Use No. 12, aluminum alloy, sheet metal screws or other suitable aluminum alloy or stainless steel fasteners. Drive fasteners in holes made with a

No. 26 drill in securing side laps, end laps, and flashings. Space fasteners 12 inch maximum on center. Where end lap fasteners are required to improve closure, locate the end lap fasteners not more than 2 inch from the end of the overlapping sheet.

3.1.9 Protection from Contact with Dissimilar Materials

3.1.9.1 Copper or Copper-bearing Alloys

Paint with heavy-bodied bituminous paint surfaces in contact with dissimilar metal, or separate the surfaces by means of moistureproof building felts.

3.1.9.2 Aluminum

Do not allow aluminum surfaces in direct contact with other metals except stainless steel, zinc, or zinc coating. Where aluminum contacts another metal, paint the dissimilar metal with a primer followed by two coats of aluminum paint. Where drainage from a dissimilar metal passes over aluminum, paint the dissimilar metal with a non-lead pigmented paint.

3.1.9.3 Metal Surfaces

Paint surfaces in contact with mortar, concrete, or other masonry materials with alkali-resistant coatings such as heavy-bodied bituminous paint.

3.1.9.4 Wood or Other Absorptive Materials

Paint surfaces that may become repeatedly wet and in contact with metal with two coats of aluminum paint or a coat of heavy-bodied bituminous paint.

3.1.10 Expansion and Contraction

Provide expansion and contraction joints at not more than 32 foot intervals for aluminum and at not more than 40 foot intervals for other metals. Provide an additional joint where the distance between the last expansion joint and the end of the continuous run is more than half the required interval. Space joints evenly. Join extruded aluminum gravel stops and fascias by expansion and contraction joints spaced not more than 12 feet apart.

3.1.11 Base Flashing

Extend up vertical surfaces of the flashing not less than 8 inch and not less than 4 inch under the roof covering. Where finish wall coverings form a counterflashing, extend the vertical leg of the flashing up behind the applied wall covering not less than 6 inch. Overlap the flashing strips with the previously laid flashing not less than 3 inch. Fasten the strips at their upper edge to the deck. Horizontal flashing at vertical surfaces must extend vertically above the roof surface and fastened at their upper edge to the deck a minimum of 6 inch on center with large headed aluminum roofing nails or hex headed, galvanized shielded screws a minimum of 2-inch lap of any surface. Solder end laps and provide for expansion and contraction. Extend the metal flashing over crickets at the up-slope side of curbs, and similar vertical surfaces extending through sloping roofs, the metal flashings. Extend the metal flashings onto the roof covering not less than 4.5 inch at the lower side of vertical

surfaces extending through the roof decks. Install and fit the flashings so as to be completely weathertight. Provide factory-fabricated base flashing for interior and exterior corners. Do not use metal base flashing on built-up roofing.

3.1.12 Counterflashing

Except where indicated or specified otherwise, insert counterflashing in reglets located from 9 to 10 inch above roof decks, extend down vertical surfaces over upturned vertical leg of base flashings not less than 3 inch. Fold the exposed edges of counterflashings 1/2 inch. Where stepped counterflashings are required, they may be installed in short lengths a minimum 8 inch by 10 inch or may be of the preformed one-piece type. Provide end laps in counterflashings not less than 3 inch and make it weathertight with plastic cement. Do not make lengths of metal counterflashings exceed 10 feet. Form the flashings to the required shapes before installation. Factory-form the corners not less than 12 inch from the angle. Secure the flashings in the reglets with lead wedges and space not more than 18 inch apart; on short runs, place wedges closer together. Fill caulked-type reglets or raked joints which receive counterflashing with caulking compound. Turn up the concealed edge of counterflashings built into masonry or concrete walls not less than 1/4 inch and extend not less than 2 inch into the walls. Install counterflashing to provide a spring action against base flashing. Where bituminous base flashings are provided, extend down the counter flashing as close as practicable to the top of the cant strip. Factory form counter flashing to provide spring action against the base flashing.

3.1.13 Metal Reglets

Provide factory fabricated caulked type or friction type reglets with a minimum opening of 1/4 inch and a depth of 1 1/4 inch, as approved.

3.1.13.1 Caulked Reglets

Provide with rounded edges and metal strap brackets or other anchors for securing to the concrete forms. Provide reglets with a core to protect them from injury during the installation. Provide built-up mitered corner pieces for internal and external angles. Wedge the flashing in the reglets with lead wedges every 18 inch, caulked full and solid with an approved compound.

3.1.13.2 Friction Reglets

Provide with flashing receiving slots not less than 5/8 inch deep, one inch jointing tongues, and upper and lower anchoring flanges installed at 24 inch maximum snaplock receiver. Insert the flashing the full depth of the slot and lock by indentations made with a dull-pointed tool, wedges, and filled with a sealant. For friction reglets, install flashing snaplock receivers at 24 inch on center maximum. When the flashing has been inserted the full depth, caulk the slot and lock and fill with sealant.

3.1.14 Polyvinyl Chloride Reglets Temporary Construction Installation

Rigid polyvinyl chloride reglets ASTM D1784, Type II, Grade 1, Class 14333-D, 0.075 inch minimum thickness may be provided in lieu of metal reglets for temporary construction.

3.1.15 Sheet Metal Covering on Flat, Sloped, or Curved Surfaces

Except as specified or indicated otherwise, cover and flash all minor flat, sloped, or curved surfaces such as crickets, bulkheads, dormers and small decks with metal sheets of the material used for flashing; maximum size of sheets, 16 by 18 inch. Fasten sheets to sheathing with metal cleats. Lock seams and solder. Lock aluminum seams as recommended by aluminum manufacturer. Provide an underlayment of roofing felt for all sheet metal covering.

3.1.16 Expansion Joints

Provide expansion joints for roofs, walls, and floors as specified . Provide expansion joints in continuous sheet metal at 40 foot intervals for copper and stainless steel and at 32 foot intervals for aluminum, . Provide evenly spaced joints. Provide an additional joint where the distance between the last expansion joint and the end of the continuous run is more than half the required interval spacing. Conform to the requirements of Table I.

3.1.17 Flashing at Roof Penetrations and Equipment Supports

Provide metal flashing for all pipes, ducts, and conduits projecting through the roof surface and for equipment supports, guy wire anchors, and similar items supported by or attached to the roof deck.

3.1.18 Stepped Flashing

Stepped flashing shall be installed where sloping roofs surfaced with shingles abut vertical surfaces. Separate pieces of base flashing shall be placed in alternate shingle courses.

3.1.19 Copings

Provide coping using copper sheets 8 or 10 feet long joined by a 3/4 inch locked and soldered seam. Terminate outer edges in edge strips. Install with sealed cover plate joints as indicated.

3.2 PAINTING

Field-paint sheet metal for separation of dissimilar materials.

3.2.1 Aluminum Surfaces

Shall be solvent cleaned and given one coat of zinc-molybdate primer and one coat of aluminum paint.

3.3 CLEANING

Clean exposed sheet metal work at completion of installation. Remove grease and oil films, handling marks, contamination from steel wool, fittings and drilling debris, and scrub-clean. Free the exposed metal surfaces of dents, creases, waves, scratch marks, and solder or weld marks.

3.4 REPAIRS TO FINISH

Scratches, abrasions, and minor surface defects of finish may be repaired in accordance with the manufacturer's printed instructions and as approved. Repair damaged surfaces caused by scratches, blemishes, and

variations of color and surface texture. Replace items which cannot be repaired.

3.5 FIELD QUALITY CONTROL

Establish and maintain a Quality Control Plan for sheet metal used in conjunction with roofing to assure compliance of the installed sheet metalwork with the contract requirements. Remove work that is not in compliance with the contract and replace or correct. Include quality control, but not be limited to, the following:

a. Observation of environmental conditions; number and skill level of sheet metal workers; condition of substrate.

b. Verification that specified material is provided and installed.

c. Inspection of sheet metalwork, for proper size(s) and thickness(es), fastening and joining, and proper installation.

3.5.1 Procedure

Submit for approval prior to start of roofing work. Include a checklist of points to be observed. Document the actual quality control observations and inspections. Furnish a copy of the documentation to the Contracting Officer at the end of each day.

TABLE I. SHEET METAL WEIGHTS, THICKNESSES, AND GAGES

Sheet Metal Items	Copper kilograms per square foot	Aluminum, inch	Stainless Steel, inch	Terne-Coated Stainless Steel, inch	Zinc-Coated Steel, U.S. Std. Gage
Building Expansion Joints					
Cover	16	.032	.015	.015	24
Waterstop-or flanged, U-type.	16	-	.015	.015	-
Covering on minor flat, pitched or curved surfaces	20	.040	.018	.018	-
Flashings:					
Base	20	.040	.018	.018	24
Cap (Counter-f	16	.032	.015	.015	26

TABLE I. SHEET METAL WEIGHTS, THICKNESSES, AND GAGES

Sheet Metal Items	Copper kilograms per square foot	Aluminum, inch	Stainless Steel, inch	Terne-Coated Stainless Steel, inch	Zinc-Coated Steel, U.S. Std. Gage
Extrusions	-	.075	-	-	-
Sheets, smooth	20	.050	.018	.018	24
Gutters:					
(a) Brass.					
(b) May be lead weighing 4 pounds per square foot.					
(c) May be polyvinyl chloride.					
(d) 2.5 pound minimum lead sleeve with 4 inch flange. Where lead sleeve is impractical, refer to paragraph entitled "Single Pipe Vents" for optional material.					

TABLE II. SHEET METAL JOINTS

TYPE OF JOINT			
Item Designation	Copper, Terne-Coated Stainless Steel, Zinc-Coated Steel and Stainless Steel	Aluminum	Remarks
Flashings			
Base	One inch 3 inch lap for expansion joint	One inch flat locked, soldered; sealed; 3 inch lap for expansion joint	Aluminum producer's recommended hard setting sealant for locked aluminum joints. Fill each metal expansion joint with a joint sealing compound compound.

TABLE II. SHEET METAL JOINTS			
TYPE OF JOINT			
Item Designation	Copper, Terne-Coated Stainless Steel, Zinc-Coated Steel and Stainless Steel	Aluminum	Remarks
Reglets	Butt joint	--	Seal reglet groove with joint sealing compound.
Stepped	3 inch lap	3 inch lap	--
Extrusions	--	Butt with 1/2 inch space	Use sheet flashing beneath and a cover plate
Sheet, smooth	Butt with 1/4 inch space	Butt with 1/4 inch space	Use sheet flashing backup plate.
(a) Provide a 3 inch lap elastomeric flashing with manufacturer's recommended sealant.			
(b) Seal Polyvinyl chloride reglet with manufacturer's recommended sealant.			

-- End of Section --

SECTION 07 84 00

FIRESTOPPING
05/10

PART 1 GENERAL

1.1 SUMMARY

Furnish and install tested and listed firestopping systems, combination of materials, or devices to form an effective barrier against the spread of flame, smoke and gases, and maintain the integrity of fire resistance rated walls, partitions, floors, and ceiling-floor assemblies, including through-penetrations and construction joints and gaps.

a. Through-penetrations include the annular space around pipes, tubes, conduit, wires, cables and vents.

b. Construction joints include those used to accommodate expansion, contraction, wind, or seismic movement; firestopping material shall not interfere with the required movement of the joint.

Gaps requiring firestopping include gaps between the curtain wall and the floor slab and between the top of the fire-rated walls and the roof or floor deck above and at the intersection of shaft assemblies and adjoining fire resistance rated assemblies.

1.2 REFERENCES

The publications listed below form a part of this specification to the extent referenced. The publications are referred to within the text by the basic designation only.

ASTM INTERNATIONAL (ASTM)

ASTM E119	(2014) Standard Test Methods for Fire Tests of Building Construction and Materials
ASTM E1399/E1399M	(1997; E 2013;R 2013) Cyclic Movement and Measuring the Minimum and Maximum Joint Widths of Architectural Joint Systems
ASTM E1966	(2007; R 2011) Fire-Resistive Joint Systems
ASTM E2174	(2014b) Standard Practice for On-Site Inspection of Installed Fire Stops
ASTM E2307	(2015) Standard Test Method for Determining Fire Resistance of Perimeter Fire Barrier Systems Using Intermediate-Scale, Multi-story Test Apparatus
ASTM E2393	(2010a) Standard Practice for On-Site Inspection of Installed Fire Resistive Joint Systems and Perimeter Fire Barriers

ASTM E814	(2013a) Standard Test Method for Fire Tests of Through-Penetration Fire Stops
ASTM E84	(2014) Standard Test Method for Surface Burning Characteristics of Building Materials

FM GLOBAL (FM)

FM 4991	(2013) Approval of Firestop Contractors
FM APP GUIDE	(updated on-line) Approval Guide http://www.approvalguide.com/

INTERNATIONAL CODE COUNCIL (ICC)

ICC IBC	(2012) International Building Code

UNDERWRITERS LABORATORIES (UL)

UL 1479	(2003; Reprint Oct 2012) Fire Tests of Through-Penetration Firestops
UL 2079	(2004; Reprint Dec 2014) Tests for Fire Resistance of Building Joint Systems
UL 723	(2008; Reprint Aug 2013) Test for Surface Burning Characteristics of Building Materials
UL Fire Resistance	(2014) Fire Resistance Directory

1.3 SEQUENCING

Coordinate the specified work with other trades. Apply firestopping materials, at penetrations of pipes and ducts, prior to insulating, unless insulation meets requirements specified for firestopping. Apply firestopping materials. at building joints and construction gaps, prior to completion of enclosing walls or assemblies. Cast-in-place firestop devices shall be located and installed in place before concrete placement. Pipe, conduit or cable bundles shall be installed through cast-in-place device after concrete placement but before area is concealed or made inaccessible. Firestop material shall be inspected and approved prior to final completion and enclosing of any assemblies that may conceal installed firestop.

1.4 SUBMITTALS

Government approval is required for submittals with a "G" designation; submittals not having a "G" designation are for Contractor Quality Control approval. Submit the following in accordance with Section 01 33 00 SUBMITTAL PROCEDURES:

SD-02 Shop Drawings

Firestopping System; G

SD-03 Product Data

Firestopping Materials; G

SD-06 Test Reports

Inspection; G

SD-07 Certificates

Inspector Qualifications
Firestopping Materials
Installer Qualifications; G

1.5 QUALITY ASSURANCE

1.5.1 Installer

Engage an experienced Installer who is:

a. FM Research approved in accordance with FM 4991, operating as a UL Certified Firestop Contractor, or

b. Certified, licensed, or otherwise qualified by the firestopping manufacturer as having the necessary staff, training, and a minimum of 3 years experience in the installation of manufacturer's products in accordance with specified requirements. Submit documentation of this experience. A manufacturer's willingness to sell its firestopping products to the Contractor or to an installer engaged by the Contractor does not in itself confer installer qualifications on the buyer. The Installer shall have been trained by a direct representative of the manufacturer (not distributor or agent) in the proper selection and installation procedures. The installer shall obtain from the manufacturer and submit written certification of training, and retain proof of certification for duration of firestop installation.

1.5.2 Inspector Qualifications

The inspector shall have a minimum of two years experience in construction field inspections of firestopping systems, products, and assemblies. The inspector shall be completely independent of, and divested from, the installer, the manufacturer, and the supplier of any material or item being inspected. The inspector shall not be a competitor of the installer, the contractor, the manufacturer, or supplier of any material or item being inspected. Include in the qualifications submittal a notarized statement assuring compliance with the requirements stated herein.

1.6 DELIVERY, STORAGE, AND HANDLING

Deliver materials in the original unopened packages or containers showing name of the manufacturer and the brand name. Store materials off the ground, protected from damage and exposure to elements and temperatures in accordance with manufacturer requirements. Remove damaged or deteriorated materials from the site. Use materials within their indicated shelf life.

PART 2 PRODUCTS

2.1 FIRESTOPPING SYSTEM

Submit detail drawings including manufacturer's descriptive data, typical details conforming to UL Fire Resistance or other details certified by another nationally recognized testing laboratory, installation instructions or UL listing details for a firestopping assembly in lieu of fire-test data or report. For those firestop applications for which no UL tested system is available through a manufacturer, a manufacturer's engineering judgment, derived from similar UL system designs or other tests, shall be submitted for review and approval prior to installation. Submittal must indicate the firestopping material to be provided for each type of application. When more than a total of 5 penetrations and/or construction joints are to receive firestopping, provide drawings that indicate location, "F" "T" and "L" ratings, and type of application.

Also, submit a written report indicating locations of and types of penetrations and types of firstopping used at each location; record type by UL list printed numbers.

2.2 FIRESTOPPING MATERIALS

Provide firestopping materials, supplied from a single domestic manufacturer, consisting of commercially manufactured, asbestos-free, nontoxic products FM APP GUIDE approved, or UL listed, for use with applicable construction and penetrating items, complying with the following minimum requirements:

2.2.1 Fire Hazard Classification

Material shall have a flame spread of 25 or less, and a smoke developed rating of 50 or less, when tested in accordance with ASTM E84 or UL 723. Material shall be an approved firestopping material as listed in UL Fire Resistance or by a nationally recognized testing laboratory.

2.2.2 Toxicity

Material shall be nontoxic and carcinogen free to humans at all stages of application or during fire conditions and shall not contain hazardous chemicals or require harmful chemicals to clean material or equipment.

2.2.3 Fire Resistance Rating

Firestop systems shall be UL Fire Resistance listed or FM APP GUIDE approved with "F" rating at least equal to fire-rating of fire wall or floor in which penetrated openings are to be protected. Where required, firestop systems shall also have "T" rating at least equal to the fire-rated floor in which the openings are to be protected.

2.2.3.1 Through-Penetrations

Firestopping materials for through-penetrations, as described in paragraph SYSTEM DESCRIPTION, shall provide "F", "T" and "L" fire resistance ratings in accordance with ASTM E814 or UL 1479. Fire resistance ratings shall be as follows:

2.2.3.1.1 Penetrations of Fire Resistance Rated Walls and Partitions

F Rating = Rating of wall or partition being penetrated.

2.2.3.1.2 Penetrations of Fire Resistance Rated Floors, Floor-Ceiling Assemblies and the Ceiling Membrane of Roof-Ceiling Assemblies

Where the penetrating item is outside of a wall cavity the F rating must be equal to the fire resistance rating of the floor penetrated, and the T rating shall be in accordance with the requirements of ICC IBC.

2.2.3.1.3 Penetrations of Fire and Smoke Resistance Rated Walls, Floors, Floor-Ceiling Assemblies, and the ceiling membrane of Roof-Ceiling Assemblies

L Rating = <10 cfm/sf Where L rating is required.

2.2.3.2 Construction Joints and Gaps

Fire resistance ratings of construction joints, as described in paragraph SYSTEM DESCRIPTION, and gaps such as those between floor slabs and curtain walls shall be the same as the construction in which they occur. Construction joints and gaps shall be provided with firestopping materials and systems that have been tested in accordance with ASTM E119, ASTM E1966 or UL 2079 to meet the required fire resistance rating. Curtain wall joints shall be provided with firestopping materials and systems that have been tested in accordance with ASTM E2307 to meet the required fire resistance rating. Systems installed at construction joints shall meet the cycling requirements of ASTM E1399/E1399M or UL 2079. All joints at the intersection of the top of a fire resistance rated wall and the underside of a fire-rated floor, floor ceiling, or roof ceiling assembly shall provide a minimum class II movement capability.

2.2.4 Material Certification

Submit certificates attesting that firestopping material complies with the specified requirements. For all intumescent firestop materials used in through penetration systems, manufacturer shall provide certification of compliance with UL 1479.

PART 3 EXECUTION

3.1 PREPARATION

Areas to receive firestopping must be free of dirt, grease, oil, or loose materials which may affect the fitting or fire resistance of the firestopping system. For cast-in-place firestop devices, formwork or metal deck to receive device prior to concrete placement must be sound and capable of supporting device. Prepare surfaces as recommended by the manufacturer.

3.2 INSTALLATION

Completely fill void spaces with firestopping material regardless of geometric configuration, subject to tolerance established by the manufacturer. Firestopping systems for filling floor voids 4 inches or more in any direction must be capable of supporting the same load as the floor is designed to support or be protected by a permanent barrier to prevent loading or traffic in the firestopped area. Install firestopping in accordance with manufacturer's written instructions. Provide tested

and listed firestop systems in the following locations, except in floor slabs on grade:

a. Penetrations of duct, conduit, tubing, cable and pipe through floors and through fire-resistance rated walls, partitions, and ceiling-floor assemblies.

b. Penetrations of vertical shafts such as pipe chases, elevator shafts, and utility chutes.

c. Gaps at the intersection of floor slabs and curtain walls, including inside of hollow curtain walls at the floor slab.

d. Gaps at perimeter of fire-resistance rated walls and partitions, such as between the top of the walls and the bottom of roof decks.

e. Construction joints in floors and fire rated walls and partitions.

f. Other locations where required to maintain fire resistance rating of the construction.

3.2.1 Insulated Pipes and Ducts

Thermal insulation shall be cut and removed where pipes or ducts pass through firestopping, unless insulation meets requirements specified for firestopping. Replace thermal insulation with a material having equal thermal insulating and firestopping characteristics.

3.2.2 Fire Dampers

Install and firestop fire dampers in accordance with Section 23 00 00 AIR SUPPLY, DISTRIBUTION, VENTILATION, AND EXHAUST SYSTEM. Firestop installed with fire damper must be tested and approved for use in fire damper system. Firestop installed with fire damper must be tested and approved for use in fire damper system.

3.2.3 Data and Communication Cabling

Cabling for data and communication applications shall be sealed with re-enterable firestopping products.

3.2.3.1 Re-Enterable Devices

Firestopping devices shall be pre-manufactured modular devices, containing built-in self-sealing intumescent inserts. Firestopping devices shall allow for cable moves, additions or changes without the need to remove or replace any firestop materials. Devices must be capable of maintaining the fire resistance rating of the penetrated membrane at 0 percent to 100 percent visual fill of penetrants; while maintaining "L" rating of <10 cfm/sf at 0 percent to 100 percent visual fill.

3.2.3.2 Re-Sealable Products

Provide firestopping pre-manufactured modular products, containing self-sealing intumescent inserts. Firestopping products shall allow for cable moves, additions or changes. Devices shall be capable of maintaining the fire resistance rating of the penetrated membrane at 0 percent to 100 percent visual fill of penetrants.

3.3 INSPECTION

For Navy projects, install one of each type of penetration and have it inspected and accepted by the Naval Facilities Engineering Command, Fire Protection Engineer prior to the installation of the remainder of the penetrations. At this inspection, the manufacturer's technical representative of the firestopping material shall be present. For all projects, the firestopped areas shall not be covered or enclosed until inspection is complete and approved by the Contracting Officer. Inspect the applications initially to ensure adequate preparations (clean surfaces suitable for application, etc.) and periodically during the work to assure that the completed work has been accomplished according to the manufacturer's written instructions and the specified requirements. Submit written reports indicating locations of and types of penetrations and types of firestopping used at each location; type shall be recorded by UL listed printed numbers.

3.3.1 Inspection Standards

Inspect all firestopping in accordance to ASTM E2393 and ASTM E2174 for firestop inspection, and document inspection results to be submitted.

3.3.2 Inspection Reports

Submit inspection report stating that firestopping work has been inspected and found to be applied according to the manufacturer's recommendations and the specified requirements.

-- End of Section --

SECTION 07 92 00

JOINT SEALANTS
01/07

PART 1 GENERAL

1.1 REFERENCES

The publications listed below form a part of this specification to the extent referenced. The publications are referred to within the text by the basic designation only.

ASTM INTERNATIONAL (ASTM)

ASTM C1311	(2014) Standard Specification for Solvent Release Agents
ASTM C509	(2006; R 2011) Elastomeric Cellular Preformed Gasket and Sealing Material
ASTM C734	(2006; R 2012) Low-Temperature Flexibility of Latex Sealants After Artificial Weathering
ASTM C919	(2012) Use of Sealants in Acoustical Applications
ASTM C920	(2014a) Standard Specification for Elastomeric Joint Sealants
ASTM D1056	(2014) Standard Specification for Flexible Cellular Materials - Sponge or Expanded Rubber
ASTM D1667	(2005; R 2011) Flexible Cellular Materials - Poly (Vinyl Chloride) Foam (Closed-Cell)
ASTM D217	(2010) Cone Penetration of Lubricating Grease
ASTM D2452	(2003; R 2009) Standard Test Method for Extrudability of Oil- and Resin-Base Caulking Compounds
ASTM D2453	(2003; R 2009) Standard Test Method for Shrinkage and Tenacity of Oil- and Resin-Base Caulking Compounds
ASTM E84	(2014) Standard Test Method for Surface Burning Characteristics of Building Materials

1.2 SUBMITTALS

Government approval is required for submittals with a "G" designation; submittals not having a "G" designation are for Contractor Quality Control approval. Submit the following in accordance with Section 01 33 00

SUBMITTAL PROCEDURES:

SD-03 Product Data

Sealants

Primers

Bond breakers

Backstops

Manufacturer's descriptive data including storage requirements, shelf life, curing time, instructions for mixing and application, and primer data (if required). Provide a copy of the Material Safety Data Sheet for each solvent, primer or sealant material.

SD-07 Certificates

Sealant

Certificates of compliance stating that the materials conform to the specified requirements.

1.3 ENVIRONMENTAL CONDITIONS

Apply sealant when the ambient temperature is between 40 and 90 degrees F.

1.4 DELIVERY AND STORAGE

Deliver materials to the job site in unopened manufacturers' external shipping containers, with brand names, date of manufacture, color, and material designation clearly marked thereon. Label elastomeric sealant containers to identify type, class, grade, and use. Carefully handle and store materials to prevent inclusion of foreign materials or subjection to sustained temperatures exceeding 90 degrees F or less than 0 degrees F.

1.5 QUALITY ASSURANCE

1.5.1 Compatibility with Substrate

Verify that each of the sealants are compatible for use with joint substrates.

1.5.2 Joint Tolerance

Provide joint tolerances in accordance with manufacturer's printed instructions.

1.6 SPECIAL WARRANTY

Guarantee sealant joint against failure of sealant and against water penetration through each sealed joint for five years.

PART 2 PRODUCTS

2.1 SEALANTS

Provide sealant that has been tested and found suitable for the substrates

to which it will be applied.

2.1.1 Interior Sealant

Provide ASTM C920, Type S or M, Grade NS, Class 12.5, Use NT. Location(s) and color(s) of sealant for the following:

LOCATION	COLOR
a. Small voids between walls or partitions and adjacent lockers, casework, shelving, door frames, built-in or surface-mounted equipment and fixtures, and similar items.	White
b. Perimeter of frames at doors, windows, and access panels which adjoin exposed interior concrete and masonry surfaces.	gray
c. Joints of interior masonry walls and partitions which adjoin columns, pilasters, concrete walls, and exterior walls unless otherwise detailed.	white
d. Joints between edge members for acoustical tile and adjoining vertical surfaces.	white
e. Interior locations, not otherwise indicated or specified, where small voids exist between materials specified to be painted.	white

2.1.2 Exterior Sealant

For joints in vertical surfaces, provide ASTM C920, Type S or M, Grade NS, Class 25, Use NT. For joints in horizontal surfaces, provide ASTM C920, Type S or M, Grade P, Class 25, Use T. Provide location(s) and color(s) of sealant as follows:

LOCATION	COLOR
a. Joints and recesses formed where frames and subsills of windows, doors, louvers, and vents adjoin masonry, concrete, or metal frames. Use sealant at both exterior and interior surfaces of exterior wall penetrations.	Match adjacent surface color
b. Expansion and control joints.	Match adjacent surface color
c. Voids where items pass through exterior walls.	Match adjacent surface color
d. Metal reglets, where flashing is inserted into masonry joints, and where flashing is penetrated by coping dowels.	Match adjacent surface color

LOCATION	COLOR
e. Metal-to-metal joints where sealant is indicated or specified.	Match adjacent surface color
f. Joints between ends of gravel stops, fascias, copings, and adjacent walls.	Match adjacent surface color

2.1.3 Floor Joint Sealant

ASTM C920, Type S or M, Grade P, Class 25, Use T. Provide location(s) and color(s) of sealant as follows:

LOCATION	COLOR
b. Control and expansion joints in floors, slabs, ceramic tile, and walkways.	Match adjacent surface color.

2.1.4 Acoustical Sealant

Rubber or polymer-based acoustical sealant conforming to ASTM C919 must have a flame spread of 25 or less and a smoke developed rating of 50 or less when tested in accordance with ASTM E84. Acoustical sealant must have a consistency of 250 to 310 when tested in accordance with ASTM D217, and must remain flexible and adhesive after 500 hours of accelerated weathering as specified in ASTM C734, and must be non-staining.

2.1.5 Preformed Sealant

Provide preformed sealant of polybutylene or isoprene-butylene based pressure sensitive weather resistant tape or bead sealant capable of sealing out moisture, air and dust when installed as recommended by the manufacturer. At temperatures from minus 30 to plus 160 degrees F, the sealant must be non-bleeding and no loss of adhesion.

2.1.5.1 Bead

Bead sealant: Provide cross-section dimensions of one quarter inch.

2.1.5.2 Foam Strip

Provide foam strip of polyurethane foam; with cross-section dimensions as required. Provide foam strip capable of sealing out moisture, air, and dust when installed and compressed as recommended by the manufacturer. Service temperature must beminus 40 to plus 275 degrees F. Furnish untreated strips with adhesive to hold them in place. Do not allow adhesive to stain or bleed into adjacent finishes. Saturate treated strips with butylene waterproofing or impregnated with asphalt.

2.2 PRIMERS

Provide a nonstaining, quick-drying type and consistency recommended by the sealant manufacturer for the particular application.

2.3 BOND BREAKERS

Provide the type and consistency recommended by the sealant manufacturer to prevent adhesion of the sealant to backing or to bottom of the joint.

2.4 BACKSTOPS

Provide glass fiber roving or neoprene, butyl, polyurethane, or polyethylene foams free from oil or other staining elements as recommended by sealant manufacturer. Provide 25 to 33 percent oversized backing for closed cell and 40 to 50 percent oversized backing for open cell material, unless otherwise indicated. Make backstop material compatible with sealant. Do not use oakum and other types of absorptive materials as backstops.

2.4.1 Rubber

Conform to ASTM D1056, as required for cellular rubber sponge backing.

2.4.2 PVC

Conform to ASTM D1667, as required for Polyvinyl chloride (PVC) backing.

2.4.3 Synthetic Rubber

Conform to ASTM C509, as required for Synthetic rubber backing.

2.4.4 Neoprene

Conform to ASTM D1056, as required for Neoprene backing.

2.4.5 Butyl Rubber Based

Provide Butyl Rubber Based Sealants of single component, solvent release, color as required, conforming to ASTM C1311.

2.4.6 Silicon Rubber Base

Provide Silicon Rubber Based Sealants of single component, solvent release, color as required, conforming to ASTM C920, Non-sag, as required.

2.5 CAULKING

Conform to ASTM D2452 and ASTM D2453, as required for Oil- and resin-based caulking.

2.6 CLEANING SOLVENTS

Provide type(s) recommended by the sealant manufacturer except for aluminum and bronze surfaces that will be in contact with sealant.

PART 3 EXECUTION

3.1 SURFACE PREPARATION

Clean surfaces from dirt frost, moisture, grease, oil, wax, lacquer, paint, or other foreign matter that would tend to destroy or impair adhesion. Remove oil and grease with solvent. Surfaces must be wiped dry with clean cloths. When resealing an existing joint, remove existing

caulk or sealant prior to applying new sealant. For surface types not listed below, contact sealant manufacturer for specific recommendations.

3.1.1 Steel Surfaces

Remove loose mill scale by sandblasting or, if sandblasting is impractical or would damage finish work, scraping and wire brushing. Remove protective coatings by sandblasting or using a residue-free solvent.

3.1.2 Aluminum or Bronze Surfaces

Remove temporary protective coatings from surfaces that will be in contact with sealant. When masking tape is used as a protective coating, remove tape and any residual adhesive just prior to sealant application. For removing protective coatings and final cleaning, use nonstaining solvents recommended by the manufacturer of the item(s) containing aluminum or bronze surfaces.

3.1.3 Concrete and Masonry Surfaces

Where surfaces have been treated with curing compounds, oil, or other such materials, remove materials by sandblasting or wire brushing. Remove laitance, efflorescence and loose mortar from the joint cavity.

3.1.4 Wood Surfaces

Keep wood surfaces to be in contact with sealants free of splinters and sawdust or other loose particles.

3.2 SEALANT PREPARATION

Do not add liquids, solvents, or powders to the sealant. Mix multicomponent elastomeric sealants in accordance with manufacturer's instructions.

3.3 APPLICATION

3.3.1 Joint Width-To-Depth Ratios

a. Acceptable Ratios:

JOINT WIDTH	JOINT DEPTH	
	Minimum	Maximum
For metal, glass, or other nonporous surfaces:		
1/4 inch (minimum)	1/4 inch	1/4 inch
over 1/4 inch	1/2 of width	Equal to width
For wood, concrete, masonry, stone:		
1/4 inch (minimum)	1/4 inch	1/4 inch

JOINT WIDTH	JOINT DEPTH	
	Minimum	Maximum
over 1/4 inch to 1/2 inch	1/4 inch	Equal to width
over 1/2 inch to 2 inch	1/2 inch	5/8 inch
Over 2 inch	As recommended by sealant manufacturer	

b. Unacceptable Ratios: Where joints of acceptable width-to-depth ratios have not been provided, clean out joints to acceptable depths and grind or cut to acceptable widths without damage to the adjoining work. Grinding is not required on metal surfaces.

3.3.2 Masking Tape

Place masking tape on the finish surface on one or both sides of a joint cavity to protect adjacent finish surfaces from primer or sealant smears. Remove masking tape within 10 minutes after joint has been filled and tooled.

3.3.3 Backstops

Install backstops dry and free of tears or holes. Tightly pack the back or bottom of joint cavities with backstop material to provide a joint of the depth specified. Install backstops in the following locations:

a. Where indicated.

b. Where backstop is not indicated but joint cavities exceed the acceptable maximum depths specified in paragraph entitled, "Joint Width-to-Depth Ratios".

3.3.4 Primer

Immediately prior to application of the sealant, clean out loose particles from joints. Where recommended by sealant manufacturer, apply primer to joints in concrete masonry units, wood, and other porous surfaces in accordance with sealant manufacturer's instructions. Do not apply primer to exposed finish surfaces.

3.3.5 Bond Breaker

Provide bond breakers to the back or bottom of joint cavities, as recommended by the sealant manufacturer for each type of joint and sealant used, to prevent sealant from adhering to these surfaces. Carefully apply the bond breaker to avoid contamination of adjoining surfaces or breaking bond with surfaces other than those covered by the bond breaker.

3.3.6 Sealants

Provide a sealant compatible with the material(s) to which it is applied. Do not use a sealant that has exceeded shelf life or has jelled and can not be discharged in a continuous flow from the gun. Apply the sealant in accordance with the manufacturer's printed instructions with a gun having a nozzle that fits the joint width. Force sealant into joints to fill the joints solidly without air pockets. Tool sealant after application to

ensure adhesion. Make sealant uniformly smooth and free of wrinkles. Upon completion of sealant application, roughen partially filled or unfilled joints, apply sealant, and tool smooth as specified. Apply sealer over the sealant when and as specified by the sealant manufacturer.

3.4 PROTECTION AND CLEANING

3.4.1 Protection

Protect areas adjacent to joints from sealant smears. Masking tape may be used for this purpose if removed 5 to 10 minutes after the joint is filled.

3.4.2 Final Cleaning

Upon completion of sealant application, remove remaining smears and stains and leave the work in a clean and neat condition.

a. Masonry and Other Porous Surfaces: Immediately scrape off fresh sealant that has been smeared on masonry and rub clean with a solvent as recommended by the sealant manufacturer. Allow excess sealant to cure for 24 hour then remove by wire brushing or sanding.

b. Metal and Other Non-Porous Surfaces: Remove excess sealant with a solvent-moistened cloth.

-- End of Section --

SECTION 09 90 00

PAINTS AND COATINGS
05/11

PART 1 GENERAL

1.1 REFERENCES

The publications listed below form a part of this specification to the extent referenced. The publications are referred to within the text by the basic designation only.

AMERICAN CONFERENCE OF GOVERNMENTAL INDUSTRIAL HYGIENISTS (ACGIH)

ACGIH 0100	(2001; Supplements 2002-2008) Documentation of the Threshold Limit Values and Biological Exposure Indices

ASTM INTERNATIONAL (ASTM)

ASTM C920	(2014a) Standard Specification for Elastomeric Joint Sealants
ASTM D235	(2002; R 2012) Mineral Spirits (Petroleum Spirits) (Hydrocarbon Dry Cleaning Solvent)
ASTM D4214	(2007) Standard Test Method for Evaluating the Degree of Chalking of Exterior Paint Films
ASTM D4263	(1983; R 2012) Indicating Moisture in Concrete by the Plastic Sheet Method
ASTM D4444	(2013) Use and Calibration of Hand-Held Moisture Meters
ASTM D523	(2014) Standard Test Method for Specular Gloss

MASTER PAINTERS INSTITUTE (MPI)

MPI 10	(Oct 2009) Exterior Latex, Flat, MPI Gloss Level 1
MPI 107	(Oct 2009) Rust Inhibitive Primer (Water-Based)
MPI 139	(Oct 2009) Interior High Performance Latex, MPI Gloss Level 3
MPI 140	(Oct 2009) Interior High Performance Latex, MPI Gloss Level 4
MPI 145	(Oct 2009) Institutional Low Odor / VOC Interior Latex, MPI Gloss Level 3
MPI 147	(Oct 2009) Institutional Low Odor / VOC

	Interior Latex, Semi-Gloss, MPI Gloss Level 5
MPI 153	(Oct 2009) Interior W.B. Light Industrial Coating, Semi-Gloss, MPI Gloss Level 5
MPI 39	(Oct 2009) Interior Latex-Based Wood Primer
MPI 45	(Oct 2009) Interior Alkyd Primer Sealer
MPI 46	(Oct 2009) Interior Enamel Undercoat
MPI 47	(Oct 2009) Interior Alkyd, Semi-Gloss, MPI Gloss Level 5
MPI 5	(Oct 2009) Exterior Alkyd Wood Primer
MPI 50	(Oct 2009) Interior Latex Primer Sealer
MPI 52	(Oct 2009) Interior Latex, MPI Gloss Level 3
MPI 6	(Oct 2009) Exterior Latex Wood Primer
MPI 7	(Oct 2009) Exterior Oil Wood Primer
MPI 94	(Oct 2009) Exterior Alkyd, Semi-Gloss, MPI Gloss Level 5

SCIENTIFIC CERTIFICATION SYSTEMS (SCS)

SCS SP-01	(2000) Environmentally Preferable Product Specification for Architectural and Anti-Corrosive Paints

SOCIETY FOR PROTECTIVE COATINGS (SSPC)

SSPC Guide 6	(2004) Guide for Containing Surface Preparation Debris Generated During Paint Removal Operations
SSPC Guide 7	(2004; E 2004) Guide to the Disposal of Lead-Contaminated Surface Preparation Debris
SSPC PA 1	(2000; E 2004) Shop, Field, and Maintenance Painting of Steel
SSPC PA Guide 3	(1982; E 1995) A Guide to Safety in Paint Application
SSPC QP 1	(2012; E 2012) Standard Procedure for Evaluating Painting Contractors (Field Application to Complex Industrial Structures)
SSPC SP 1	(1982; E 2004) Solvent Cleaning
SSPC SP 12/NACE No.5	(2002) Surface Preparation and Cleaning of

	Metals by Waterjetting Prior to Recoating
SSPC SP 2	(1982; E 2000; E 2004) Hand Tool Cleaning
SSPC SP 3	(1982; E 2004) Power Tool Cleaning
SSPC SP 6/NACE No.3	(2007) Commercial Blast Cleaning

U.S. ARMY CORPS OF ENGINEERS (USACE)

EM 385-1-1	(2008; Errata 2011) Safety and Health Requirements Manual

U.S. DEPARTMENT OF DEFENSE (DOD)

MIL-STD-101	(2014; Rev C) Color Code for Pipelines and for Compressed Gas Cylinders

U.S. GENERAL SERVICES ADMINISTRATION (GSA)

FED-STD-313	(2014; Rev E) Material Safety Data, Transportation Data and Disposal Data for Hazardous Materials Furnished to Government Activities

U.S. NATIONAL ARCHIVES AND RECORDS ADMINISTRATION (NARA)

29 CFR 1910.1000	Air Contaminants
29 CFR 1910.1001	Asbestos
29 CFR 1910.1025	Lead
29 CFR 1926.62	Lead

1.2 SUBMITTALS

Government approval is required for submittals with a "G" designation; submittals not having a "G" designation are for Contractor Quality Control approval. Submit the following in accordance with Section 01 33 00 SUBMITTAL PROCEDURES for Design-Bid-Build projects:

The current MPI, "Approved Product List" which lists paint by brand, label, product name and product code as of the date of contract award, will be used to determine compliance with the submittal requirements of this specification. The Contractor may choose to use a subsequent MPI "Approved Product List", however, only one list may be used for the entire contract and each coating system is to be from a single manufacturer. All coats on a particular substrate must be from a single manufacturer. No variation from the MPI Approved Products List is acceptable.

Samples of specified materials may be taken and tested for compliance with specification requirements.

In keeping with the intent of Executive Order 13101, "Greening the Government through Waste Prevention, Recycling, and Federal Acquisition", products certified by SCS as meeting SCS SP-01 shall be given preferential consideration over registered products. Products that are registered

shall be given preferential consideration over products not carrying any EPP designation.

SD-02 Shop Drawings

Piping identification

Submit color stencil codes

SD-03 Product Data

Coating

Manufacturer's Technical Data Sheets

Indicate VOC content.

Sealant

SD-04 Samples

Color; G

Submit manufacturer's samples of paint colors. Cross reference color samples to color scheme as indicated.

SD-07 Certificates

Applicator's qualifications

Qualification Testing laboratory for coatings; G

SD-08 Manufacturer's Instructions

Application instructions

Mixing

Detailed mixing instructions, minimum and maximum application temperature and humidity, potlife, and curing and drying times between coats.

Manufacturer's Material Safety Data Sheets

Submit manufacturer's Material Safety Data Sheets for coatings, solvents, and other potentially hazardous materials, as defined in FED-STD-313.

SD-10 Operation and Maintenance Data

Coatings; G

Preprinted cleaning and maintenance instructions for all coating systems shall be provided.

1.3 APPLICATOR'S QUALIFICATIONS

1.3.1 Contractor Qualification

Submit the name, address, telephone number, FAX number, and e-mail address of the contractor that will be performing all surface preparation and coating application. Submit evidence that key personnel have successfully performed surface preparation and application of coatings on a minimum of three similar projects within the past three years. List information by individual and include the following:

a. Name of individual and proposed position for this work.

b. Information about each previous assignment including:

Position or responsibility

Employer (if other than the Contractor)

Name of facility owner

Mailing address, telephone number, and telex number (if non-US) of facility owner

Name of individual in facility owner's organization who can be contacted as a reference

Location, size and description of structure

Dates work was carried out

Description of work carried out on structure

1.3.2 SSPC QP 1 Certification

All contractors and subcontractors that perform surface preparation or coating application shall be certified by the Society for Protective Coatings (formerly Steel Structures Painting Council) (SSPC) to the requirements of SSPC QP 1 prior to contract award, and shall remain certified while accomplishing any surface preparation or coating application. The painting contractors and painting subcontractors must remain so certified for the duration of the project. If a contractor's or subcontractor's certification expires, the firm will not be allowed to perform any work until the certification is reissued. Requests for extension of time for any delay to the completion of the project due to an inactive certification will not be considered and liquidated damages will apply. Notify the Contracting Officer of any change in contractor certification status.

1.4 QUALITY ASSURANCE

1.4.1 Field Samples and Tests

The Contracting Officer may choose up to two coatings that have been delivered to the site to be tested at no cost to the Government. Take samples of each chosen product as specified in the paragraph "Sampling Procedures." Test each chosen product as specified in the paragraph

"Testing Procedure." Products which do not conform, shall be removed from the job site and replaced with new products that conform to the referenced specification. Testing of replacement products that failed initial testing shall be at no cost to the Government.

1.4.1.1 Sampling Procedure

The Contracting Officer will select paint at random from the products that have been delivered to the job site for sample testing. The Contractor shall provide one quart samples of the selected paint materials. The samples shall be taken in the presence of the Contracting Officer, and labeled, identifying each sample. Provide labels in accordance with the paragraph "Packaging, Labeling, and Storage" of this specification.

1.4.1.2 Testing Procedure

Provide Batch Quality Conformance Testing for specified products, as defined by and performed by MPI. As an alternative to Batch Quality Conformance Testing, the Contractor may provide Qualification Testing for specified products above to the appropriate MPI product specification, using the third-party laboratory approved under the paragraph "Qualification Testing" laboratory for coatings. The qualification testing lab report shall include the backup data and summary of the test results. The summary shall list all of the reference specification requirements and the result of each test. The summary shall clearly indicate whether the tested paint meets each test requirement. Note that Qualification Testing may take 4 to 6 weeks to perform, due to the extent of testing required.

Submit name, address, telephone number, FAX number, and e-mail address of the independent third party laboratory selected to perform testing of coating samples for compliance with specification requirements. Submit documentation that laboratory is regularly engaged in testing of paint samples for conformance with specifications, and that employees performing testing are qualified. If the Contractor chooses MPI to perform the Batch Quality Conformance testing, the above submittal information is not required, only a letter is required from the Contractor stating that MPI will perform the testing.

1.5 REGULATORY REQUIREMENTS

1.5.1 Environmental Protection

In addition to requirements specified elsewhere for environmental protection, provide coating materials that conform to the restrictions of the local Air Pollution Control District and regional jurisdiction. Notify Contracting Officer of any paint specified herein which fails to conform.

1.5.2 Lead Content

Do not use coatings having a lead content over 0.06 percent by weight of nonvolatile content.

1.5.3 Chromate Content

Do not use coatings containing zinc-chromate or strontium-chromate.

1.5.4 Asbestos Content

Materials shall not contain asbestos.

1.5.5 Mercury Content

Materials shall not contain mercury or mercury compounds.

1.5.6 Silica

Abrasive blast media shall not contain free crystalline silica.

1.5.7 Human Carcinogens

Materials shall not contain ACGIH 0100 confirmed human carcinogens (A1) or suspected human carcinogens (A2).

1.6 PACKAGING, LABELING, AND STORAGE

Paints shall be in sealed containers that legibly show the contract specification number, designation name, formula or specification number, batch number, color, quantity, date of manufacture, manufacturer's formulation number, manufacturer's directions including any warnings and special precautions, and name and address of manufacturer. Pigmented paints shall be furnished in containers not larger than 5 gallons. Paints and thinners shall be stored in accordance with the manufacturer's written directions, and as a minimum, stored off the ground, under cover, with sufficient ventilation to prevent the buildup of flammable vapors, and at temperatures between 40 to 95 degrees F. Do not store paint, polyurethane, varnish, or wood stain products with materials that have a high capacity to adsorb VOC emissions. Do not store paint, polyurethane, varnish, or wood stain products in occupied spaces.

1.7 SAFETY AND HEALTH

Apply coating materials using safety methods and equipment in accordance with the following:

Work shall comply with applicable Federal, State, and local laws and regulations, and with the ACCIDENT PREVENTION PLAN, including the Activity Hazard Analysis as specified in Section 01 35 26.00 22 GOVERNMENT SAFETY REQUIREMENTS and in Appendix A of EM 385-1-1. The Activity Hazard Analysis shall include analyses of the potential impact of painting operations on painting personnel and on others involved in and adjacent to the work zone.

1.7.1 Safety Methods Used During Coating Application

Comply with the requirements of SSPC PA Guide 3.

1.7.2 Toxic Materials

To protect personnel from overexposure to toxic materials, conform to the most stringent guidance of:

a. The applicable manufacturer's Material Safety Data Sheets (MSDS) or local regulation.

b. 29 CFR 1910.1000.

c. ACGIH 0100, threshold limit values.

d. The appropriate OSHA standard in 29 CFR 1910.1025 and 29 CFR 1926.62 for surface preparation on painted surfaces containing lead. Removal and disposal of coatings which contain lead is specified in Section 02 83 13.00 22 LEAD IN CONSTRUCTION (PWD ME)." Additional guidance is given in SSPC Guide 6 and SSPC Guide 7. Refer to drawings for list of hazardous materials located on this project. Contractor to coordinate paint preparation activities with this specification section.

e. The appropriate OSHA standards in 29 CFR 1910.1001 for surface preparation of painted surfaces containing asbestos. Removal and disposal of coatings which contain asbestos materials is specified in Section 02 82 16.00 22 ENGINEERING CONTROL OF ASBESTOS CONTAINING MATERIALS (PWD ME). Refer to drawings for list of hazardous materials located on this project. Contractor to coordinate paint preparation activities with this specification section.

1.8 ENVIRONMENTAL CONDITIONS

Comply, at minimum, with manufacturer recommendations for space ventilation during and after installation. Isolate area of application from rest of building when applying high-emission paints or coatings.

1.8.1 Coatings

Do not apply coating when air or substrate conditions are:

a. Less than 5 degrees F above dew point;

b. Below 50 degrees F or over 95 degrees F, unless specifically pre-approved by the Contracting Officer and the product manufacturer. Under no circumstances shall application conditions exceed manufacturer recommendations.

1.8.2 Post-Application

Vacate space for as long as possible after application. Wait a minimum of 48 hours before occupying freshly painted rooms. Maintain one of the following ventilation conditions during the curing period, or for 72 hours after application:

a. Supply 100 percent outside air 24 hours a day.

b. Supply airflow at a rate of 6 air changes per hour, when outside temperatures are between 55 degrees F and 85 degrees F and humidity is between 30 percent and 60 percent.

c. Supply airflow at a rate of 1.5 air changes per hour, when outside air conditions are not within the range stipulated above.

1.9 SUSTAINABLE DESIGN REQUIREMENTS

1.10 SCHEDULING

Allow paint, polyurethane, varnish, and wood stain installations to cure prior to the installation of materials that adsorb VOCs.

1.11 COLOR SELECTION

Colors of finish coats shall be as indicated or specified. Where not indicated or specified, colors shall be selected by the Contracting Officer. Manufacturers' names and color identification are used for the purpose of color identification only. Named products are acceptable for use only if they conform to specified requirements. Products of other manufacturers are acceptable if the colors approximate colors indicated and the product conforms to specified requirements.

Tint each coat progressively darker to enable confirmation of the number of coats.

1.12 LOCATION AND SURFACE TYPE TO BE PAINTED

1.12.1 Painting Included

Where a space or surface is indicated to be painted, include the following unless indicated otherwise.

a. Surfaces behind portable objects and surface mounted articles readily detachable by removal of fasteners, such as screws and bolts.

b. New factory finished surfaces that require identification or color coding and factory finished surfaces that are damaged during performance of the work.

c. Existing coated surfaces that are damaged during performance of the work.

1.12.1.1 Exterior Painting

Includes new surfaces, existing coated surfaces, and existing uncoated surfaces, of the building and appurtenances. Also included are existing coated surfaces made bare by cleaning operations.

1.12.1.2 Interior Painting

Includes new surfaces, existing uncoated surfaces, and existing coated surfaces of the building and appurtenances as indicated and existing coated surfaces made bare by cleaning operations. Where a space or surface is indicated to be painted, include the following items, unless indicated otherwise.

1.12.2 Painting Excluded

Do not paint the following unless indicated otherwise.

a. Surfaces concealed and made inaccessible by panelboards, fixed ductwork, machinery, and equipment fixed in place.

b. Surfaces in concealed spaces. Concealed spaces are defined as enclosed spaces above suspended ceilings, furred spaces, attic spaces, crawl spaces, elevator shafts and chases.

c. Steel to be embedded in concrete.

d. Copper, stainless steel, aluminum, brass, and lead except existing coated surfaces.

e. Hardware, fittings, and other factory finished items.

1.12.3 Mechanical and Electrical Painting

Includes field coating of interior and exterior new and existing surfaces.

a. Where a space or surface is indicated to be painted, include the following items unless indicated otherwise.

(1) Exposed piping, conduit, and ductwork;

(2) Supports, hangers, air grilles, and registers;

(3) Miscellaneous metalwork and insulation coverings.

b. Do not paint the following, unless indicated otherwise:

(1) New zinc-coated, aluminum, and copper surfaces under insulation

(2) New aluminum jacket on piping

(3) New interior ferrous piping under insulation.

1.12.4 Definitions and Abbreviations

1.12.4.1 Qualification Testing

Qualification testing is the performance of all test requirements listed in the product specification. This testing is accomplished by MPI to qualify each product for the MPI Approved Product List, and may also be accomplished by Contractor's third party testing lab if an alternative to Batch Quality Conformance Testing by MPI is desired.

1.12.4.2 Batch Quality Conformance Testing

Batch quality conformance testing determines that the product provided is the same as the product qualified to the appropriate product specification. This testing shall only be accomplished by MPI testing lab.

1.12.4.3 Coating

A film or thin layer applied to a base material called a substrate. A coating may be a metal, alloy, paint, or solid/liquid suspensions on various substrates (metals, plastics, wood, paper, leather, cloth, etc.). They may be applied by electrolysis, vapor deposition, vacuum, or mechanical means such as brushing, spraying, calendaring, and roller coating. A coating may be applied for aesthetic or protective purposes or both. The term "coating" as used herein includes emulsions, enamels, stains, varnishes, sealers, epoxies, and other coatings, whether used as primer, intermediate, or finish coat. The terms paint and coating are

used interchangeably.

1.12.4.4 DFT or dft

Dry film thickness, the film thickness of the fully cured, dry paint or coating.

1.12.4.5 DSD

Degree of Surface Degradation, the MPI system of defining degree of surface degradation. Five (5) levels are generically defined under the Assessment sections in the MPI Maintenance Repainting Manual.

1.12.4.6 EPP

Environmentally Preferred Products, a standard for determining environmental preferability in support of Executive Order 13101.

1.12.4.7 EXT

MPI short term designation for an exterior coating system.

1.12.4.8 INT

MPI short term designation for an interior coating system.

1.12.4.9 micron / microns

The metric measurement for 0.001 mm or one/one-thousandth of a millimeter.

1.12.4.10 mil / mils

The English measurement for 0.001 in or one/one-thousandth of an inch, equal to 25.4 microns or 0.0254 mm.

1.12.4.11 mm

The metric measurement for millimeter, 0.001 meter or one/one-thousandth of a meter.

1.12.4.12 MPI Gloss Levels

MPI system of defining gloss. Seven (7) gloss levels (G1 to G7) are generically defined under the Evaluation sections of the MPI Manuals. Traditionally, Flat refers to G1/G2, Eggshell refers to G3, Semigloss refers to G5, and Gloss refers to G6.

Gloss levels are defined by MPI as follows:

Gloss Level	Description	Units at 60 degrees	Units at 85 degrees
G1	Matte or Flat	0 to 5	10 max
G2	Velvet	0 to 10	10 to 35
G3	Eggshell	10 to 25	10 to 35
G4	Satin	20 to 35	35 min
G5	Semi-Gloss	35 to 70	
G6	Gloss	70 to 85	
G7	High Gloss		

Gloss Level	Description	Units at 60 degrees	Units at 85 degrees

Gloss is tested in accordance with ASTM D523. Historically, the Government has used Flat (G1 / G2), Eggshell (G3), Semi-Gloss (G5), and Gloss (G6).

1.12.4.13 MPI System Number

The MPI coating system number in each Division found in either the MPI Architectural Painting Specification Manual or the Maintenance Repainting Manual and defined as an exterior (EXT/REX) or interior system (INT/RIN). The Division number follows the CSI Master Format.

1.12.4.14 Paint

See Coating definition.

1.12.4.15 REX

MPI short term designation for an exterior coating system used in repainting projects or over existing coating systems.

1.12.4.16 RIN

MPI short term designation for an interior coating system used in repainting projects or over existing coating systems.

PART 2 PRODUCTS

2.1 MATERIALS

Conform to the coating specifications and standards referenced in PART 3. Submit manufacturer's technical data sheets for specified coatings and solvents. Minimum 50 percent post-consumer recycled content for the following light-colored paints and primers . Minimum 50 percent post-consumer recycled content for dark-colored paints and primers. All consolidated latex paints shall contain a minimum of 100 percent post-consumer recycled content. Comply with applicable regulations regarding toxic and hazardous materials.

PART 3 EXECUTION

3.1 PROTECTION OF AREAS AND SPACES NOT TO BE PAINTED

Prior to surface preparation and coating applications, remove, mask, or otherwise protect, hardware, hardware accessories, machined surfaces, radiator covers, plates, lighting fixtures, public and private property, and other such items not to be coated that are in contact with surfaces to be coated. Following completion of painting, workmen skilled in the trades involved shall reinstall removed items. Restore surfaces contaminated by coating materials, to original condition and repair damaged items.

3.2 RESEALING OF EXISTING EXTERIOR JOINTS

3.2.1 Surface Condition

Surfaces shall be clean, dry to the touch, and free from frost and

moisture; remove grease, oil, wax, lacquer, paint, defective backstop, or other foreign matter that would prevent or impair adhesion. Where adequate grooves have not been provided, clean out to a depth of 1/2 inch and grind to a minimum width of 1/4 inch without damage to adjoining work. Grinding shall not be required on metal surfaces.

3.2.2 Backstops

In joints more than 1/2 inch deep, install glass fiber roving or neoprene, butyl, polyurethane, or polyethylene foams free of oil or other staining elements as recommended by sealant manufacturer. Backstop material shall be compatible with sealant. Do not use oakum and other types of absorptive materials as backstops.

3.2.3 Primer and Bond Breaker

Install the type recommended by the sealant manufacturer.

3.2.4 Ambient Temperature

Between 38 degrees F and 95 degrees F when applying sealant.

3.2.5 Exterior Sealant

For joints in vertical surfaces, provide ASTM C920, Type S or M, Grade NS, Class 25, Use NT. For joints in horizontal surfaces, provide ASTM C920, Type S or M, Grade P, Class 25, Use T. Color(s) shall be selected by the Contracting Officer. Apply the sealant in accordance with the manufacturer's printed instructions. Force sealant into joints with sufficient pressure to fill the joints solidly. Sealant shall be uniformly smooth and free of wrinkles.

3.2.6 Cleaning

Immediately remove fresh sealant from adjacent areas using a solvent recommended by the sealant manufacturer. Upon completion of sealant application, remove remaining smears and stains and leave the work in a clean condition. Allow sealant time to cure, in accordance with manufacturer's recommendations, prior to coating.

3.3 SURFACE PREPARATION

Remove dirt, splinters, loose particles, grease, oil, disintegrated coatings, and other foreign matter and substances deleterious to coating performance as specified for each substrate before application of paint or surface treatments. Oil and grease shall be removed prior to mechanical cleaning. Cleaning shall be programmed so that dust and other contaminants will not fall on wet, newly painted surfaces. Exposed ferrous metals such as nail heads on or in contact with surfaces to be painted with water-thinned paints, shall be spot-primed with a suitable corrosion-inhibitive primer capable of preventing flash rusting and compatible with the coating specified for the adjacent areas.

3.3.1 Additional Requirements for Preparation of Surfaces With Existing Coatings

Before application of coatings, perform the following on surfaces covered by soundly-adhered coatings, defined as those which cannot be removed with a putty knife:

a. Test existing finishes for lead before sanding, scraping, or removing. If lead is present, refer to paragraph Toxic Materials.

b. Wipe previously painted surfaces to receive solvent-based coatings, except stucco and similarly rough surfaces clean with a clean, dry cloth saturated with mineral spirits, ASTM D235. Allow surface to dry. Wiping shall immediately precede the application of the first coat of any coating, unless specified otherwise.

c. Sand existing glossy surfaces to be painted to reduce gloss. Brush, and wipe clean with a damp cloth to remove dust.

d. The requirements specified are minimum. Comply also with the application instructions of the paint manufacturer.

e. Previously painted surfaces specified to be repainted and damaged during construction shall be thoroughly cleaned of all grease, dirt, dust or other foreign matter.

f. Blistering, cracking, flaking and peeling or other deteriorated coatings shall be removed.

g. Chalk shall be removed so that when tested in accordance with ASTM D4214, the chalk resistance rating is no less than 8.

h. Slick surfaces shall be roughened. Damaged areas such as, but not limited to, nail holes, cracks, chips, and spalls shall be repaired with suitable material to match adjacent undamaged areas.

i. Edges of chipped paint shall be feather edged and sanded smooth.

j. Rusty metal surfaces shall be cleaned as per SSPC requirements. Solvent, mechanical, or chemical cleaning methods shall be used to provide surfaces suitable for painting.

k. New, proposed coatings shall be compatible with existing coatings.

3.3.2 Existing Coated Surfaces with Minor Defects

Sand, spackle, and treat minor defects to render them smooth. Minor defects are defined as scratches, nicks, cracks, gouges, spalls, alligatoring, chalking, and irregularities due to partial peeling of previous coatings.

3.3.3 Removal of Existing Coatings

Remove existing coatings from the following surfaces:

a. Surfaces containing large areas of minor defects;

b. Surfaces containing more than 20 percent peeling area; and

c. Surfaces designated by the Contracting Officer, such as surfaces where rust shows through existing coatings.

3.3.4 Substrate Repair

a. Repair substrate surface damaged during coating removal;

b. Sand edges of adjacent soundly-adhered existing coatings so they are tapered as smooth as practical to areas involved with coating removal; and

c. Clean and prime the substrate as specified.

3.4 PREPARATION OF METAL SURFACES

3.4.1 Existing and New Ferrous Surfaces

a. Ferrous Surfaces including Shop-coated Surfaces and Small Areas That Contain Rust, Mill Scale and Other Foreign Substances: Solvent clean in accordance with SSPC SP 1 to remove oil and grease. Where shop coat is missing or damaged, clean according to SSPC SP 2, SSPC SP 3, , or . ; Shop-coated ferrous surfaces shall be protected from corrosion by treating and touching up corroded areas immediately upon detection.

b. Surfaces With More Than 20 Percent Rust, Mill Scale, and Other Foreign Substances: Clean entire surface in accordance with SSPC SP 6/NACE No.3/SSPC SP 12/NACE No.5 WJ-3.

3.5 PREPARATION OF CONCRETE AND CEMENTITIOUS SURFACE

3.5.1 Gypsum Board, Plaster, and Stucco

a. Surface Cleaning: Plaster and stucco shall be clean and free from loose matter; gypsum board shall be dry. Remove loose dirt and dust by brushing with a soft brush, rubbing with a dry cloth, or vacuum-cleaning prior to application of the first coat material. A damp cloth or sponge may be used if paint will be water-based.

b. Repair of Minor Defects: Prior to painting, repair joints, cracks, holes, surface irregularities, and other minor defects with patching plaster or spackling compound and sand smooth.

c. Allowable Moisture Content: Latex coatings may be applied to damp surfaces, but not surfaces with droplets of water. Do not apply epoxies to damp surfaces as determined by ASTM D4263. New plaster to be coated shall have a maximum moisture content of 8 percent, when measured in accordance with ASTM D4444, Method A, unless otherwise authorized. In addition to moisture content requirements, allow new plaster to age a minimum of 30 days before preparation for painting.

3.6 PREPARATION OF WOOD AND PLYWOOD SURFACES

3.6.1 New , Existing Uncoated, and Existing Coated Plywood and Wood Surfaces, Except Floors:

a. Wood surfaces shall be cleaned of foreign matter.

   Surface Cleaning: Surfaces shall be free from dust and other deleterious substances and in a condition approved by the Contracting Officer prior to receiving paint or other finish. Do not use water to clean uncoated wood. Scrape to remove loose coatings. Lightly sand to roughen the entire area of previously enamel-coated wood surfaces.

b. Removal of Fungus and Mold: Wash existing coated surfaces with a solution composed of 3 ounces (2/3 cup) trisodium phosphate, 1 ounce

(1/3 cup) household detergent, 1 quart 5 percent sodium hypochlorite solution and 3 quarts of warm water. Rinse thoroughly with fresh water.

c. Moisture content of the wood shall not exceed 12 percent as measured by a moisture meter in accordance with ASTM D4444, Method A, unless otherwise authorized.

d. Wood surfaces adjacent to surfaces to receive water-thinned paints shall be primed and/or touched up before applying water-thinned paints.

e. Cracks and Nailheads: Set and putty stop nailheads and putty cracks after the prime coat has dried.

f. Cosmetic Repair of Minor Defects:

(1) Knots and Resinous Wood and Fire, Smoke, Water, and Color Marker Stained Existing Coated Surface: Prior to application of coating, cover knots and stains with two or more coats of 3-pound-cut shellac varnish, plasticized with 5 ounces of castor oil per gallon. Scrape away existing coatings from knotty areas, and sand before treating. Prime before applying any putty over shellacked area.

(2) Open Joints and Other Openings: Fill with whiting putty, linseed oil putty. Sand smooth after putty has dried.

(3) Checking: Where checking of the wood is present, sand the surface, wipe and apply a coat of pigmented orange shellac. Allow to dry before paint is applied.

g. Prime Coat For New Exterior Surfaces: Prime coat windows, frames, and trim before wood becomes dirty, warped, or weathered.

3.6.2 Interior Wood Surfaces, Stain Finish

Interior wood surfaces to receive stain shall be sanded. Oak and other open-grain wood to receive stain shall be given a coat of wood filler not less than 8 hours before the application of stain; excess filler shall be removed and the surface sanded smooth.

3.7 APPLICATION

3.7.1 Coating Application

Painting practices shall comply with applicable federal, state and local laws enacted to insure compliance with Federal Clean Air Standards. Apply coating materials in accordance with SSPC PA 1. SSPC PA 1 methods are applicable to all substrates, except as modified herein.

At the time of application, paint shall show no signs of deterioration. Uniform suspension of pigments shall be maintained during application.

Unless otherwise specified or recommended by the paint manufacturer, paint may be applied by brush, roller, or spray. Use trigger operated spray nozzles for water hoses. Rollers for applying paints and enamels shall be of a type designed for the coating to be applied and the surface to be coated. Wear protective clothing and respirators when applying oil-based paints or using spray equipment with any paints.

Paints, except water-thinned types, shall be applied only to surfaces that are completely free of moisture as determined by sight or touch.

Thoroughly work coating materials into joints, crevices, and open spaces. Special attention shall be given to insure that all edges, corners, crevices, welds, and rivets receive a film thickness equal to that of adjacent painted surfaces.

Each coat of paint shall be applied so dry film shall be of uniform thickness and free from runs, drops, ridges, waves, pinholes or other voids, laps, brush marks, and variations in color, texture, and finish. Hiding shall be complete.

Touch up damaged coatings before applying subsequent coats. Interior areas shall be broom clean and dust free before and during the application of coating material.

a. Drying Time: Allow time between coats, as recommended by the coating manufacturer, to permit thorough drying, but not to present topcoat adhesion problems. Provide each coat in specified condition to receive next coat.

b. Primers, and Intermediate Coats: Do not allow primers or intermediate coats to dry more than 30 days, or longer than recommended by manufacturer, before applying subsequent coats. Follow manufacturer's recommendations for surface preparation if primers or intermediate coats are allowed to dry longer than recommended by manufacturers of subsequent coatings. Each coat shall cover surface of preceding coat or surface completely, and there shall be a visually perceptible difference in shades of successive coats.

c. Finished Surfaces: Provide finished surfaces free from runs, drops, ridges, waves, laps, brush marks, and variations in colors.

d. Thermosetting Paints: Topcoats over thermosetting paints (epoxies and urethanes) should be applied within the overcoating window recommended by the manufacturer.

3.7.2 Mixing and Thinning of Paints

Reduce paints to proper consistency by adding fresh paint, except when thinning is mandatory to suit surface, temperature, weather conditions, application methods, or for the type of paint being used. Obtain written permission from the Contracting Officer to use thinners. The written permission shall include quantities and types of thinners to use.

When thinning is allowed, paints shall be thinned immediately prior to application. Consult with manufacturer for ratio. The use of thinner shall not relieve the Contractor from obtaining complete hiding, full film thickness, or required gloss. Thinning shall not cause the paint to exceed limits on volatile organic compounds. Paints of different manufacturers shall not be mixed.

3.7.3 Two-Component Systems

Two-component systems shall be mixed in accordance with manufacturer's instructions. Any thinning of the first coat to ensure proper penetration

and sealing shall be as recommended by the manufacturer for each type of substrate.

3.7.4 Coating Systems

a. Systems by Substrates: Apply coatings that conform to the respective specifications listed in the following Tables:

Table

Division 5. Interior Metal, Ferrous and Non-Ferrous Paint Table
Division 6. Interior Wood Paint Table
Division 9: Interior Plaster, Gypsum Board, Textured Surfaces Paint Table

b. Minimum Dry Film Thickness (DFT): Apply paints, primers, varnishes, enamels, undercoats, and other coatings to a minimum dry film thickness of 1.5 mil each coat unless specified otherwise in the Tables. Coating thickness where specified, refers to the minimum dry film thickness.

c. Coatings for Surfaces Not Specified Otherwise: Coat surfaces which have not been specified, the same as surfaces having similar conditions of exposure.

d. Existing Surfaces Damaged During Performance of the Work, Including New Patches In Existing Surfaces: Coat surfaces with the following:

(1) One coat of primer.

(2) One coat of undercoat or intermediate coat.

(3) One topcoat to match adjacent surfaces.

e. Existing Coated Surfaces To Be Painted: Apply coatings conforming to the respective specifications listed in the Tables herein, except that pretreatments, sealers and fillers need not be provided on surfaces where existing coatings are soundly adhered and in good condition. Do not omit undercoats or primers.

3.8 COATING SYSTEMS FOR METAL

Apply coatings of Tables in Division 5 for Exterior and Interior.

a. Apply specified ferrous metal primer on the same day that surface is cleaned, to surfaces that meet all specified surface preparation requirements at time of application.

b. Inaccessible Surfaces: Prior to erection, use one coat of specified primer on metal surfaces that will be inaccessible after erection.

c. Shop-primed Surfaces: Touch up exposed substrates and damaged coatings to protect from rusting prior to applying field primer.

d. Surface Previously Coated with Epoxy or Urethane: Apply MPI 101, 1.5 mils DFT immediately prior to application of epoxy or urethane coatings.

e. Pipes and Tubing: The semitransparent film applied to some pipes and

tubing at the mill is not to be considered a shop coat, but shall be overcoated with the specified ferrous-metal primer prior to application of finish coats.

f. Exposed Nails, Screws, Fasteners, and Miscellaneous Ferrous Surfaces. On surfaces to be coated with water thinned coatings, spot prime exposed nails and other ferrous metal with latex primer MPI 107.

3.9 COATING SYSTEMS FOR WOOD AND PLYWOOD

a. Apply coatings of Tables in Division 6 for Exterior and Interior.

b. Prior to erection, apply two coats of specified primer to treat and prime wood and plywood surfaces which will be inaccessible after erection.

c. Apply stains in accordance with manufacturer's printed instructions.

3.10 PIPING IDENTIFICATION

Piping Identification, Including Surfaces In Concealed Spaces: Provide in accordance with MIL-STD-101. Place stenciling in clearly visible locations. On piping not covered by MIL-STD-101, stencil approved names or code letters, in letters a minimum of 1/2 inch high for piping and a minimum of 2 inches high elsewhere. Stencil arrow-shaped markings on piping to indicate direction of flow using black stencil paint.

3.11 INSPECTION AND ACCEPTANCE

In addition to meeting previously specified requirements, demonstrate mobility of moving components, including swinging and sliding doors, cabinets, and windows with operable sash, for inspection by the Contracting Officer. Perform this demonstration after appropriate curing and drying times of coatings have elapsed and prior to invoicing for final payment.

3.12 WASTE MANAGEMENT

As specified in the Waste Management Plan and as follows. Do not use kerosene or any such organic solvents to clean up water based paints. Properly dispose of paints or solvents in designated containers. Close and seal partially used containers of paint to maintain quality as necessary for reuse. Store in protected, well-ventilated, fire-safe area at moderate temperature. Place materials defined as hazardous or toxic waste in designated containers. Set aside extra paint for future color matches or reuse by the Government.

3.13 PAINT TABLES

All DFT's are minimum values. Acceptable products are listed in the MPI Green Approved Products List, available at http://www.specifygreen.com/APL/ProductIdxByMPInum.asp.

3.13.1 EXTERIOR PAINT TABLES

DIVISION 6: EXTERIOR WOOD; DRESSED LUMBER, PANELING, DECKING, SHINGLES PAINT TABLE

A. New and Existing, uncoated Dressed lumber, Wood and plywood, trim, not otherwise specified:

1. Alkyd
MPI EXT 6.3B-G5 (Semigloss)
Primer: Intermediate: Topcoat:
MPI 7 MPI 94 MPI 94
System DFT: 5 mils

2. Latex
MPI EXT 6.3A-G1 (Flat)
Primer: Intermediate: Topcoat:
MPI 7 MPI 10 MPI 10
System DFT: 5 mils

B. Existing, dressed lumber, Wood and plywood, trim, previously coated with an alkyd / oil based finish coat not otherwise specified:

1. Alkyd
MPI REX 6.3B-G5 (Semigloss)
Primer: Intermediate: Topcoat:
MPI 5 MPI 94 MPI 94
System DFT: 5 mils

2. Latex
MPI REX 6.3A-G1 (Flat)
Primer: Intermediate: Topcoat:
MPI 5 MPI 10 MPI 10
System DFT: 5 mils

C. Existing, dressed lumber, Wood and plywood, trim, previously coated with a latex / waterborne finish coat not otherwise specified:

1. Latex
MPI REX 6.3L-G1 (Flat)
Spot Primer: Intermediate: Topcoat:
MPI 6 MPI 10 MPI 10
System DFT: 4.5 mils3.13.2 INTERIOR PAINT TABLES

DIVISION 6: INTERIOR WOOD PAINT TABLE

A. New and Existing, uncoated Wood and plywood not otherwise specified:

1. High Performance Architectural Latex

MPI INT 6.4S-G4 (Eggshell)
Primer: Intermediate: Topcoat:

DIVISION 6: INTERIOR WOOD PAINT TABLE

MPI 39	MPI 140	MPI 140
System DFT: 4.5 mils		

2. Alkyd
   MPI INT 6.4B-G5 (Semigloss)

Primer:	Intermediate:	Topcoat:
MPI 45	MPI 47	MPI 47
System DFT: 4.5 mils		

3. Institutional Low Odor / Low VOC Latex

New; MPI INT 6.3V-G5 (Semigloss)

Primer:	Intermediate:	Topcoat:
MPI 39	MPI 147	MPI 147
System DFT: 4 mils		

B. Existing, previously painted Wood and plywood not otherwise specified:

1. High Performance Architectural Latex

MPI RIN 6.4B-G4 (Eggshell)

Primer:	Intermediate:	Topcoat:
MPI 46	MPI 140	MPI 140
System DFT: 4.5 mils		

2. Alkyd

MPI RIN 6.4C-G5 (Semigloss)

Primer:	Intermediate:	Topcoat:
MPI 46	MPI 47	MPI 47
System DFT: 4.5 mils		

3. Institutional Low Odor / Low VOC Latex
   Existing; MPI RIN 6.4D-G5 (Semigloss)

Primer:	Intermediate:	Topcoat:
MPI 39	MPI 147	MPI 147
System DFT: 4 mils		

F. New and Existing, uncoated wood surfaces in toilets, , , restrooms, , , , and other high humidity areas not otherwise specified.:

DIVISION 6: INTERIOR WOOD PAINT TABLE

1.

2. Waterborne Light Industrial
MPI INT 6.3P-G5 (Semigloss)

Primer:	Intermediate:	Topcoat:
MPI 45	MPI 153	MPI 153

System DFT: 4.5 mils

3. Alkyd
MPI INT 6.3B-G5 (Semigloss)

Primer:	Intermediate:	Topcoat:
MPI 45	MPI 47	MPI 47

System DFT: 4.5 mils

G. Existing, previously painted wood surfaces in toilets, restrooms, and other high humidity areas not otherwise specified:

1. Waterborne Light Industrial Coating
MPI RIN 6.3P-G5 (Semigloss)

Primer:	Intermediate:	Topcoat:
MPI 46	MPI 153	MPI 153

System DFT: 4.5 mils

2. Alkyd
MPI RIN 6.3B-G5 (Semigloss)

Primer:	Intermediate:	Topcoat:
MPI 46	MPI 47	MPI 47

System DFT: 4.5 mils

DIVISION 9: INTERIOR PLASTER, GYPSUM BOARD, TEXTURED SURFACES PAINT TABLE

A. New and Existing, previously painted Plaster and Wallboard not otherwise specified:

1. Latex

New; MPI INT 9.2A-G3 (Eggshell) / Existing; RIN 9.2A-G3 (Eggshell)

Primer:	Intermediate:	Topcoat:
MPI 50	MPI 52	MPI 52

System DFT: 4 mils

2. High Performance Architectural Latex - High Traffic Areas
New; MPI INT 9.2B-G3 (Eggshell) / Existing; MPI RIN 9.2B-G3 (Eggshell)

Primer:	Intermediate:	Topcoat:

DIVISION 9: INTERIOR PLASTER, GYPSUM BOARD, TEXTURED SURFACES PAINT TABLE

MPI 50	MPI 139	MPI 139

System DFT: 4 mils

3. Institutional Low Odor / Low VOC Latex

New; MPI INT 9.2M-G3 (Eggshell) / Existing; MPI RIN 9.2M-G3 (Eggshell)

Primer:	Intermediate:	Topcoat:
MPI 50	MPI 145	MPI 145

System DFT: 4 mils

B. New and Existing, previously painted Plaster and Wallboard in toilets, restrooms, and other high humidity areas not otherwise specified.:

1. Alkyd
New; MPI INT 9.2C-G5 (Semigloss) / Existing; MPI RIN 9.2C-G5 (Semigloss)

Primer:	Intermediate:	Topcoat:
MPI 50	MPI 47	MPI 47

System DFT: 4 mils

2.

-- End of Section --

SECTION 23 00 00

AIR SUPPLY, DISTRIBUTION, VENTILATION, AND EXHAUST SYSTEMS
08/10

PART 1 GENERAL

1.1 REFERENCES

The publications listed below form a part of this specification to the extent referenced. The publications are referred to within the text by the basic designation only.

ACOUSTICAL SOCIETY OF AMERICA (ASA)

ASA S12.51	(2012) Acoustics Determination of Sound Power Levels of Noise Sources using Sound Pressure Precision Method for Reverberation Rooms

AIR MOVEMENT AND CONTROL ASSOCIATION INTERNATIONAL (AMCA)

AMCA 300	(2008) Reverberant Room Method for Sound Testing of Fans

AIR-CONDITIONING, HEATING AND REFRIGERATION INSTITUTE (AHRI)

AHRI 260 I-P	(2012) Sound Rating of Ducted Air Moving and Conditioning Equipment
AHRI 350	(2008) Sound Rating of Non-Ducted Indoor Air-Conditioning Equipment
AHRI 430	(2009) Central-Station Air-Handling Units
AHRI 440	(2008) Room Fan-Coils and Unit Ventilators
AHRI Guideline D	(1996) Application and Installation of Central Station Air-Handling Units

AMERICAN BEARING MANUFACTURERS ASSOCIATION (ABMA)

ABMA 11	(2014) Load Ratings and Fatigue Life for Roller Bearings
ABMA 9	(1990; ERTA 2012; S 2013) Load Ratings and Fatigue Life for Ball Bearings

AMERICAN SOCIETY OF HEATING, REFRIGERATING AND AIR-CONDITIONING ENGINEERS (ASHRAE)

ASHRAE 52.2	(2012; Errata 2013; INT 1 2014) Method of Testing General Ventilation Air-Cleaning Devices for Removal Efficiency by Particle Size
ASHRAE 62.1	(2010; Errata 2011; INT 3 2012; INT 4

	2012; INT 5 2013) Ventilation for Acceptable Indoor Air Quality
ASHRAE 68	(1997) Laboratory Method of Testing to Determine the Sound Power In a Duct

ASME INTERNATIONAL (ASME)

ASME A13.1	(2007; R 2013) Scheme for the Identification of Piping Systems

ASTM INTERNATIONAL (ASTM)

ASTM A123/A123M	(2013) Standard Specification for Zinc (Hot-Dip Galvanized) Coatings on Iron and Steel Products
ASTM A167	(2011) Standard Specification for Stainless and Heat-Resisting Chromium-Nickel Steel Plate, Sheet, and Strip
ASTM A53/A53M	(2012) Standard Specification for Pipe, Steel, Black and Hot-Dipped, Zinc-Coated, Welded and Seamless
ASTM A924/A924M	(2014) Standard Specification for General Requirements for Steel Sheet, Metallic-Coated by the Hot-Dip Process
ASTM B117	(2011) Standard Practice for Operating Salt Spray (Fog) Apparatus
ASTM B766	(1986; R 2008) Standard Specification for Electrodeposited Coatings of Cadmium
ASTM C1071	(2012) Standard Specification for Fibrous Glass Duct Lining Insulation (Thermal and Sound Absorbing Material)
ASTM C553	(2013) Standard Specification for Mineral Fiber Blanket Thermal Insulation for Commercial and Industrial Applications
ASTM C916	(2014) Standard Specification for Adhesives for Duct Thermal Insulation
ASTM D1654	(2008) Evaluation of Painted or Coated Specimens Subjected to Corrosive Environments
ASTM D3359	(2009; E 2010; R 2010) Measuring Adhesion by Tape Test
ASTM D520	(2000; R 2011) Zinc Dust Pigment
ASTM E84	(2014) Standard Test Method for Surface Burning Characteristics of Building Materials

NATIONAL ELECTRICAL MANUFACTURERS ASSOCIATION (NEMA)

NEMA MG 1	(2011; Errata 2012) Motors and Generators
NEMA MG 10	(2013) Energy Management Guide for Selection and Use of Fixed Frequency Medium AC Squirrel-Cage Polyphase Induction Motors
NEMA MG 11	(1977; R 2012) Energy Management Guide for Selection and Use of Single Phase Motors

NATIONAL FIRE PROTECTION ASSOCIATION (NFPA)

NFPA 701	(2010) Standard Methods of Fire Tests for Flame Propagation of Textiles and Films
NFPA 90A	(2015) Standard for the Installation of Air Conditioning and Ventilating Systems

SHEET METAL AND AIR CONDITIONING CONTRACTORS' NATIONAL ASSOCIATION (SMACNA)

SMACNA 1966	(2005) HVAC Duct Construction Standards Metal and Flexible, 3rd Edition
SMACNA 1981	(2008) Seismic Restraint Manual Guidelines for Mechanical Systems, 3rd Edition

U.S. DEPARTMENT OF ENERGY (DOE)

PL-109-58	(1992; R 2005) Energy Efficient Procurement Requirements

U.S. NATIONAL ARCHIVES AND RECORDS ADMINISTRATION (NARA)

40 CFR 82	Protection of Stratospheric Ozone

UNDERWRITERS LABORATORIES (UL)

UL 1995	(2011) Heating and Cooling Equipment
UL 6	(2007; Reprint Nov 2014) Electrical Rigid Metal Conduit-Steel
UL 723	(2008; Reprint Aug 2013) Test for Surface Burning Characteristics of Building Materials
UL 94	(2013; Reprint Sep 2014) Standard for Tests for Flammability of Plastic Materials for Parts in Devices and Appliances
UL Bld Mat Dir	(2012) Building Materials Directory

1.2 SYSTEM DESCRIPTION

Furnish ductwork, piping offsets, fittings, and accessories as required to provide a complete installation. Coordinate the work of the different trades to avoid interference between piping, equipment, structural, and electrical work. Provide complete, in place, all necessary offsets in piping and ductwork, and all fittings, and other components, required to install the work as indicated and specified.

1.2.1 Mechanical Equipment Identification

The number of charts and diagrams shall be equal to or greater than the number of mechanical equipment rooms. Where more than one chart or diagram per space is required, mount these in edge pivoted, swinging leaf, extruded aluminum frame holders which open to 170 degrees.

1.2.1.1 Charts

Provide chart listing of equipment by designation numbers and capacities such as flow rates, pressure and temperature differences, heating and cooling capacities, horsepower, pipe sizes, and voltage and current characteristics.

1.2.1.2 Diagrams

Submit proposed diagrams, at least 2 weeks prior to start of related testing. provide neat mechanical drawings provided with extruded aluminum frame under 1/8-inch glass or laminated plastic, system diagrams that show the layout of equipment, piping, and ductwork, and typed condensed operation manuals explaining preventative maintenance procedures, methods of checking the system for normal, safe operation, and procedures for safely starting and stopping the system. After approval, post these items where directed.

1.2.2 Service Labeling

Label equipment, including fans, air handlers, terminal units, etc. with labels made of self-sticking, plastic film designed for permanent installation. Labels shall be in accordance with the typical examples below:

SERVICE	LABEL AND TAG DESIGNATION
Air handling unit Number	AHU -
Fan Coil Unit Number	FC -

SERVICE	LABEL AND TAG DESIGNATION

Identify similar services with different temperatures or pressures. Where pressures could exceed 125 pounds per square inch, gage, include the maximum system pressure in the label. Label and arrow piping in accordance with the following:

a. Each point of entry and exit of pipe passing through walls.

b. Each change in direction, i.e., elbows, tees.

c. In congested or hidden areas and at all access panels at each point required to clarify service or indicated hazard.

d. In long straight runs, locate labels at distances within eyesight of each other not to exceed 75 feet. All labels shall be visible and legible from the primary service and operating area.

For Bare or Insulated Pipes	
for Outside Diameters of	Lettering
1/2 thru 1-3/8 inch	1/2 inch
1-1/2 thru 2-3/8 inch	3/4 inch
2-1/2 inch and larger	1-1/4 inch

1.2.3 Color Coding

Color coding of all piping systems shall be in accordance with ASME A13.1 .

1.3 SUBMITTALS

Government approval is required for submittals with a "G" designation; submittals not having a "G" designation are for Contractor Quality Control approval. SUBMITTAL PROCEDURES:

SD-02 Shop Drawings

Detail Drawings;

SD-03 Product Data

Duct Connectors

Air Handling Units;
Room Fan-Coil Units;
Coil Induction Units;
Test Procedures
Diagrams;

SD-06 Test Reports

Performance Tests;
Damper Acceptance Test;

SD-07 Certificates

Bolts

SD-08 Manufacturer's Instructions

Manufacturer's Installation Instructions
Operation and Maintenance Training

SD-10 Operation and Maintenance Data

Operation and Maintenance Manuals;

Air Handling Units;
Room Fan-Coil Units;
Coil Induction Units;

1.4 QUALITY ASSURANCE

Except as otherwise specified, approval of materials and equipment is based on manufacturer's published data.

a. Where materials and equipment are specified to conform to the standards of the Underwriters Laboratories, the label of or listing with reexamination in UL Bld Mat Dir, and UL 6 is acceptable as sufficient evidence that the items conform to Underwriters Laboratories requirements. In lieu of such label or listing, submit a written certificate from any nationally recognized testing agency, adequately equipped and competent to perform such services, stating that the items have been tested and that the units conform to the specified requirements. Outline methods of testing used by the specified agencies.

b. Where materials or equipment are specified to be constructed or tested, or both, in accordance with the standards of the ASTM International (ASTM), the ASME International (ASME), or other standards, a manufacturer's certificate of compliance of each item is acceptable as proof of compliance.

c. Conformance to such agency requirements does not relieve the item from compliance with other requirements of these specifications.

d. Where products are specified to meet or exceed the specified energy efficiency requirement of FEMP-designated or ENERGY STAR coveed product categories, equipment selected shall have as a minimum the efficiency rating identified under "Energy-Efficient Products" at http://www1.eere.energy.gov/femp/procurement.

These specifications conform to the efficiency requirements as defined in Public Law PL-109-58, "Energy Policy Act of 2005" for federal procurement of energy-efficient products. Equipment having a lower efficiency than ENERGY STAR or FEMP requirements may be specified if the designer determines the equipment to be more life-cycle cost effective using the life-cycle cost analysis methodology and procedure in 10 CFR 436.

1.4.1 Prevention of Corrosion

Protect metallic materials against corrosion. Manufacturer shall provide rust-inhibiting treatment and standard finish for the equipment enclosures. Do not use aluminum in contact with earth, and where connected to dissimilar metal. Protect aluminum by approved fittings, barrier material, or treatment. Ferrous parts such as anchors, bolts, braces, boxes, bodies, clamps, fittings, guards, nuts, pins, rods, shims, thimbles, washers, and miscellaneous parts not of corrosion-resistant steel or nonferrous materials shall be hot-dip galvanized in accordance with ASTM A123/A123M for exterior locations and cadmium-plated in conformance with ASTM B766 for interior locations. Provide written certification from the bolt manufacturer that the bolts furnished comply with the requirements of this specification. Include illustrations of product markings, and the number of each type of bolt to be furnished in the certification.

1.4.2 Asbestos Prohibition

Do not use asbestos and asbestos-containing products.

1.4.3 Ozone Depleting Substances Used as Refrigerants

Minimize releases of Ozone Depleting Substances (ODS) during repair, maintenance, servicing or disposal of appliances containing ODS's by complying with all applicable sections of 40 CFR 82 Part 82 Subpart F. Any person conducting repair, maintenance, servicing or disposal of appliances owned by NASA shall comply with the following:

a. Do not knowingly vent or otherwise release into the environment, Class I or Class II substances used as a refrigerant.

b. Do not open appliances without meeting the requirements of 40 CFR 82 Part 82.156 Subpart F, regarding required practices for evacuation and collection of refrigerant, and 40 CFR 82 Part 82.158 Subpart F, regarding standards of recycling and recovery equipment.

c. Only persons who comply with 40 CFR 82 Part 82.161 Subpart F, regarding technician certification, can conduct work on appliances containing refrigerant.

In addition, provide copies of all applicable certifications to the Contracting Officer at least 14 calendar days prior to initiating maintenance, repair, servicing, dismantling or disposal of appliances, including:

a. Proof of Technician Certification

b. Proof of Equipment Certification for recovery or recycling equipment.

c. Proof of availability of certified recovery or recycling equipment.

1.4.4 Use of Ozone Depleting Substances, Other than Refrigerants

The use of Class I or Class II ODS's listed as nonessential in 40 CFR 82 Part 82.66 Subpart C is prohibited. These prohibited materials and uses include:

a. Any plastic party spray streamer or noise horn which is propelled by a chlorofluorocarbon

b. Any cleaning fluid for electronic and photographic equipment which contains a chlorofluorocarbon; including liquid packaging, solvent wipes, solvent sprays, and gas sprays.

c. Any plastic flexible or packaging foam product which is manufactured with or contains a chlorofluorocarbon, including, open cell foam, open cell rigid polyurethane poured foam, closed cell extruded polystyrene sheet foam, closed cell polyethylene foam and closed cell polypropylene foam except for flexible or packaging foam used in coaxial cabling.

d. Any aerosol product or other pressurized dispenser which contains a chlorofluorocarbon, except for those listed in 40 CFR 82 Part 82.66 Subpart C.

Request a waiver if a facility requirement dictates that a prohibited material is necessary to achieve project goals. Submit the waiver request in writing to the Contracting Officer. The waiver will be evaluated and dispositioned.

1.4.5 Detail Drawings

Submit detail drawings showing equipment layout, including assembly and installation details and electrical connection diagrams; ductwork layout showing the location of all supports and hangers, typical hanger details, gauge reinforcement, reinforcement spacing rigidity classification, and static pressure and seal classifications. Include any information required to demonstrate that the system has been coordinated and functions properly as a unit on the drawings and show equipment relationship to other parts of the work, including clearances required for operation and maintenance. Submit drawings showing bolt-setting information, and foundation bolts prior to concrete foundation construction for all equipment indicated or required to have concrete foundations. Submit function designation of the equipment and any other requirements specified throughout this Section with the shop drawings.

1.4.6 Test Procedures

Submit proposed test procedures and test schedules for the ductwork leak test, and performance tests of systems, at least 2 weeks prior to the start of related testing.

1.5 DELIVERY, STORAGE, AND HANDLING

Protect stored equipment at the jobsite from the weather, humidity and temperature variations, dirt and dust, or other contaminants. Additionally, cap or plug all pipes until installed.

PART 2 PRODUCTS

2.1 STANDARD PRODUCTS

Except for the fabricated duct, plenums and casings specified in paragraphs "Metal Ductwork" and "Plenums and Casings for Field-Fabricated Units",
provide components and equipment that are standard products of manufacturers regularly engaged in the manufacturing of products that are of a similar material, design and workmanship. This requirement applies to all equipment, including diffusers, registers, fire dampers, and balancing dampers.

a. Standard products are defined as components and equipment that have been in satisfactory commercial or industrial use in similar applications of similar size for at least two years before bid opening.

b. Prior to this two year period, these standard products shall have been sold on the commercial market using advertisements in manufacturers' catalogs or brochures. These manufacturers' catalogs, or brochures shall have been copyrighted documents or have been identified with a manufacturer's document number.

c. Provide equipment items that are supported by a service organization. In product categories covered by ENERGY STAR or the Federal Energy Management Program, provide equipment that is listed on the ENERGY STAR Qualified Products List or that meets or exceeds the FEMP-designated Efficiency Requirements.

2.2 IDENTIFICATION PLATES

In addition to standard manufacturer's identification plates, provide engraved laminated phenolic identification plates for each piece of mechanical equipment. Identification plates are to designate the function of the equipment. Submit designation with the shop drawings. Identification plates shall be three layers, black-white-black, engraved to show white letters on black background. Letters shall be upper case. Identification plates 1-1/2-inches high and smaller shall be 1/16-inch thick, with engraved lettering 1/8-inch high; identification plates larger than 1-1/2-inches high shall be 1/8-inch thick, with engraved lettering of suitable height. Identification plates 1-1/2-inches high and larger shall have beveled edges. Install identification plates using a compatible adhesive.

2.3 EQUIPMENT GUARDS AND ACCESS

Fully enclose or guard belts, pulleys, chains, gears, couplings, projecting setscrews, keys, and other rotating parts exposed to personnel contact according to OSHA requirements. Properly guard or cover with insulation of a type specified, high temperature equipment and piping exposed to contact by personnel or where it creates a potential fire hazard. The requirements for catwalks, operating platforms, ladders, and guardrails are specified in Section 05 50 13 MISCELLANEOUS METAL FABRICATIONS.

2.4 ELECTRICAL WORK

a. Provide motors, controllers, integral disconnects, contactors, and

controls with their respective pieces of equipment, except controllers indicated as part of motor control centers. Provide electrical equipment, including motors and wiring, as specified in Section 26 20 00INTERIOR DISTRIBUTION SYSTEM. Provide manual or automatic control and protective or signal devices required for the operation specified and control wiring required for controls and devices specified, but not shown. For packaged equipment, include manufacturer provided controllers with the required monitors and timed restart.

b. For single-phase motors, provide high-efficiency type, fractional-horsepower alternating-current motors, including motors that are part of a system, in accordance with NEMA MG 11. Integral size motors shall be the premium efficiency type in accordance with NEMA MG 1.

c. For polyphase motors, provide squirrel-cage medium induction motors, including motors that are part of a system , and that meet the efficiency ratings for premium efficiency motors in accordance with NEMA MG 1. Select premium efficiency polyphase motors in accordance with NEMA MG 10.

d. Provide motors in accordance with NEMA MG 1 and of sufficient size to drive the load at the specified capacity without exceeding the nameplate rating of the motor. Provide motors rated for continuous duty with the enclosure specified. Provide motor duty that allows for maximum frequency start-stop operation and minimum encountered interval between start and stop. Provide motor torque capable of accelerating the connected load within 20 seconds with 80 percent of the rated voltage maintained at motor terminals during one starting period. Provide motor starters complete with thermal overload protection and other necessary appurtenances. Fit motor bearings with grease supply fittings and grease relief to outside of the enclosure.

e. Where two-speed or variable-speed motors are indicated, solid-state variable-speed controllers are allowed to accomplish the same function. Use solid-state variable-speed controllers for motors rated 10 hp or less and adjustable frequency drives for larger motors.

2.5 ANCHOR BOLTS

Provide anchor bolts for equipment placed on concrete equipment pads or on concrete slabs. Bolts to be of the size and number recommended by the equipment manufacturer and located by means of suitable templates. Installation of anchor bolts shall not degrade the surrounding concrete.

2.6 SEISMIC ANCHORAGE

Anchor equipment in accordance with applicable seismic criteria for the area and as defined in SMACNA 1981

2.7 PAINTING

Paint equipment units in accordance with approved equipment manufacturer's standards unless specified otherwise. Field retouch only if approved. Otherwise, return equipment to the factory for refinishing.

2.8 INDOOR AIR QUALITY

Provide equipment and components that comply with the requirements of ASHRAE 62.1 unless more stringent requirements are specified herein.

2.9 DUCT SYSTEMS

2.9.1 Metal Ductwork

Provide metal ductwork construction, including all fittings and components, that complies with SMACNA 1966, as supplemented and modified by this specification .

a. Ductwork shall be constructed meeting the requirements for the duct system static pressure specified in APPENDIX D of Section 23 05 93 TESTING, ADJUSTING AND BALANCING FOR HVAC.

b. Provide radius type elbows with a centerline radius of 1.5 times the width or diameter of the duct where space permits. Otherwise, elbows having a minimum radius equal to the width or diameter of the duct or square elbows with factory fabricated turning vanes are allowed.

c. Provide ductwork that meets the requirements of Seal Class A. Provide ductwork in VAV systems upstream of the VAV boxes that meets the requirements of Seal Class A.

d. Provide sealants that conform to fire hazard classification specified in Section 23 07 00 THERMAL INSULATION FOR MECHANICAL SYSTEMS and are suitable for the range of air distribution and ambient temperatures to which it is exposed. Do not use pressure sensitive tape as a sealant.

e. Make spiral lock seam duct, and flat oval with duct sealant and lock with not less than 3 equally spaced drive screws or other approved methods indicated in SMACNA 1966. Apply the sealant to the exposed male part of the fitting collar so that the sealer is on the inside of the joint and fully protected by the metal of the duct fitting. Apply one brush coat of the sealant over the outside of the joint to at least 2 inch band width covering all screw heads and joint gap. Dents in the male portion of the slip fitting collar are not acceptable. Fabricate outdoor air intake ducts and plenums with watertight soldered or brazed joints and seams.

2.9.1.1 General Service Duct Connectors

Provide a flexible duct connector approximately 6 inches in width where sheet metal connections are made to fans or where ducts of dissimilar metals are connected. For round/oval ducts, secure the flexible material by stainless steel or zinc-coated, iron clinch-type draw bands. For rectangular ducts, install the flexible material locked to metal collars using normal duct construction methods. Provide a composite connector system that complies with NFPA 701 and is classified as "flame-retardent fabrics" in UL Bld Mat Dir.

2.9.2 Plenums and Casings for Field-Fabricated Units

2.9.2.1 Plenum and Casings

Fabricate and erect plenums and casings as shown in SMACNA 1966, as applicable. Construct system casing of not less than 16 gauge galvanized sheet steel. Furnish cooling coil drain pans with 1 inch threaded outlet to collect condensation from the cooling coils. Fabricate drain pans from not lighter than 16 gauge steel, galvanized after fabrication or of 18 gauge corrosion-resisting sheet steel conforming to ASTM A167, Type 304, welded and stiffened. Thermally insulate drain pans exposed to the atmosphere to prevent condensation. Coat insulation with a flame resistant waterproofing material. Provide separate drain pans for each vertical coil section, and a separate drain line for each pan. Size pans to ensure capture of entrained moisture on the downstream-air side of the coil. Seal openings in the casing, such as for piping connections, to prevent air leakage. Size the water seal for the drain to maintain a pressure of at least 2 inch water gauge greater than the maximum negative pressure in the coil space.

2.9.2.2 Casing

Terminate casings at the curb line and bolt each to the curb using galvanized angle, as indicated in SMACNA 1966.

2.9.2.3 Duct Liner

Unless otherwise specified, duct liner is not permitted.

2.10 AIR HANDLING UNITS

2.10.1 Field-Fabricated Air Handling Units

Provide built-up units as specified in paragraph DUCT SYSTEMS. Provide fans, coils spray-coil dehumidifiers, and air filters as specified in paragraph AIR SYSTEMS EQUIPMENT for types indicated.

2.10.2 Factory-Fabricated Air Handling Units

Provide single-zone draw-through type units as indicated. Units shall include fans, coils, airtight insulated casing, prefilters, adjustable V-belt drives, belt guards for externally mounted motors, access sections where indicated, combination sectional filter-mixing box, vibration-isolators, and appurtenances required for specified operation. Provide vibration isolators as indicated. Physical dimensions of each air handling unit shall be suitable to fit space allotted to the unit with the capacity indicated. Provide air handling unit that is rated in accordance with AHRI 430 and AHRI certified for cooling.

2.10.2.1 Casings

Provide the following:

a. Casing sections single wall type , constructed of a minimum 18 gauge galvanized steel, or 18 gauge corrosion-resisting sheet steel conforming to ASTM A167, Type 304. Design and construct casing with an integral insulated structural galvanized steel frame such that exterior panels are non-load bearing.

b. Individually removable exterior panels with standard tools. Removal shall not affect the structural integrity of the unit. Furnish casings with access sections, according to paragraph AIR HANDLING UNITS, inspection doors, and access doors, all capable of opening a minimum of 90 degrees, as indicated.

c. Insulated, fully gasketed, double-wall type inspection and access doors, of a minimum 18 gauge outer and 20 gauge inner panels made of either galvanized steel or corrosion-resisting sheet steel conforming to ASTM A167, Type 304. Doors shall be rigid and provided with heavy duty hinges and latches. Inspection doors shall be a minimum 12 inches wide by 12 inches high. Access doors shall be a minimum 24 inches wide, the full height of the unit casing or a minimum of 6 foot, whichever is less. Install a minimum 8 by 8 inches sealed glass window suitable for the intended application, in all access doors.

d. Double-wall insulated type drain pan (thickness equal to exterior casing) constructed of 16 gauge galvanized steel , conforming to ASHRAE 62.1. Construct drain pans water tight, treated to prevent corrosion, and designed for positive condensate drainage. When 2 or more cooling coils are used, with one stacked above the other, condensate from the upper coils shall not flow across the face of lower coils. Provide intermediate drain pans or condensate collection channels and downspouts, as required to carry condensate to the unit drain pan out of the air stream and without moisture carryover. Construct drain pan to allow for easy visual inspection, including underneath the coil without removal of the coil and to allow complete and easy physical cleaning of the pan underneath the coil without removal of the coil. Coils shall be individually removable from the casing.

e. Casing insulation that conforms to NFPA 90A. Single-wall casing sections handling conditioned air shall be insulated with not less than 1 inch thick, 1-1/2 pound density coated fibrous glass material having a thermal conductivity not greater than 0.23 Btu/hr-sf-F. Double-wall casing sections handling conditioned air shall be insulated with not less than 2 inches of the same insulation specified for single-wall casings. Foil-faced insulation is not an acceptable substitute for use with double wall casing. Double wall insulation shall be completely sealed by inner and outer panels.

f. Factory applied fibrous glass insulation that conforms to ASTM C1071, except that the minimum thickness and density requirements do not apply, and that meets the requirements of NFPA 90A. Make air handling unit casing insulation uniform over the entire casing. Foil-faced insulation is not an acceptable substitute for use on double-wall access doors and inspections doors and casing sections.

g. Duct liner material, coating, and adhesive that conforms to fire-hazard requirements specified in Section 23 07 00 THERMAL INSULATION FOR MECHANICAL SYSTEMS. Protect exposed insulation edges and joints where insulation panels are butted with a metal nosing strip or coat to meet erosion resistance requirements of ASTM C1071.

h. A latched and hinged inspection door, in the fan and coil sections. Plus additional inspection doors, access doors and access sections where indicated.

2.10.2.2 Heating and Cooling Coils

Provide coils as specified in paragraph AIR SYSTEMS EQUIPMENT.

2.10.2.3 Air Filters

Provide air filters as specified in paragraph AIR SYSTEMS EQUIPMENT for types and thickness indicated.

2.10.2.4 Fans

Provide the following:

a. Fans that are double-inlet, centrifugal type with each fan in a separate scroll. Dynamically balance fans and shafts prior to installation into air handling unit, then after it has been installed in the air handling unit, statically and dynamically balance the entire fan assembly. Mount fans on steel shafts, accurately ground and finished.

b. Fan bearings that are sealed against dust and dirt and are precision self-aligning ball or roller type, with L50 rated bearing life at not less than 200,000 hours as defined by ABMA 9 and ABMA 11. Bearings shall be permanently lubricated or lubricated type with lubrication fittings readily accessible at the drive side of the unit. Support bearings by structural shapes, or die formed sheet structural members, or support plates securely attached to the unit casing. Do not fasten bearings directly to the unit sheet metal casing. Furnish fans and scrolls with coating indicated.

c. Fans that are driven by a unit-mounted, or a floor-mounted motor connected to fans by V-belt drive complete with belt guard for externally mounted motors. Furnish belt guards that are the three-sided enclosed type with solid or expanded metal face. Belt drives shall be designed for not less than a 1.3 service factor based on motor nameplate rating.

d. Motor sheaves that are variable pitch for 25 hp and below and fixed pitch above 25 hp as defined by AHRI Guideline D. Where fixed sheaves are required, the use of variable pitch sheaves is allowed during air balance, but replace them with an appropriate fixed sheave after air balance is completed. Select variable pitch sheaves to drive the fan at a speed that produces the specified capacity when set at the approximate midpoint of the sheave adjustment. Furnish motors for V-belt drives with adjustable bases, and with totally enclosed enclosures.

e. Motor starters of manual type with general-purpose enclosure. Select unit fan or fans to produce the required capacity at the fan static pressure with sound power level as indicated. Obtain the sound power level values according to AMCA 300, ASHRAE 68, or AHRI 260 I-P.

2.10.2.5 Access Sections and Filter/Mixing Boxes

Provide access sections where indicated and furnish with access doors as shown. Construct access sections and filter/mixing boxes in a manner identical to the remainder of the unit casing and equip with access doors. Design mixing boxes to minimize air stratification and to promote thorough mixing of the air streams.

2.10.2.6 Diffuser Sections

Furnish diffuser sections between the discharge of all housed supply fans and cooling coils of blow-through single zone units and filter sections of those units with high efficiency filters located immediately downstream of the air handling unit fan section. Provide diffuser sections that are fabricated by the unit manufacturer in a manner identical to the remainder of the unit casing, designed to be airtight under positive static pressures up to 8 inches water gauge and with an access door on each side for inspection purposes. Provide a diffuser section that contains a perforated diffusion plate, fabricated of galvanized steel, Type 316 stainless steel, aluminum, or steel treated for corrosion with manufacturer's standard corrosion-resisting finish, and designed to accomplish uniform air flow across the down-stream filters while reducing the higher fan outlet velocity to within plus or minus 5 percent of the required face velocity of the downstream component.

2.11 TERMINAL UNITS

2.11.1 Room Fan-Coil Units

Provide base units that include galvanized coil casing, coil assembly drain pan air filter, fans, motor, fan drive, motor switch, an enclosure for cabinet models and casing for concealed models, leveling devices integral with the unit for vertical type units, and sound power levels as indicated. Obtain sound power level data or values for these units according to test procedures based on AHRI 350. Sound power values apply to units provided with factory fabricated cabinet enclosures and standard grilles. Values obtained for the standard cabinet models are acceptable for concealed models without separate test provided there is no variation between models as to the coil configuration, blowers, motor speeds, or relative arrangement of parts. Provide automatic valves and controls as specified in paragraph SUPPLEMENTAL COMPONENTS/SERVICES, subparagraph CONTROLS. Fasten each unit securely to the building structure. Provide units with capacity indicated. Provide room fan-coil units that are certified as complying with AHRI 440, and meet the requirements of UL 1995.

2.11.1.1 Enclosures

Fabricate enclosures from not lighter than 18 gauge steel, reinforced and braced. Provide enclosures with front panels that are removable and have 1/4 inch closed cell insulation or 1/2 inch thick dual density foil faced fibrous glass insulation. Make the exposed side of a high density, erosion-proof material suitable for use in air streams with velocities up to 4,500 fpm. Provide a discharge grille that is adjustable and that is of such design as to properly distribute air throughout the conditioned space. Plastic discharge and return grilles are acceptable provided the plastic material is certified by the manufacturer to be classified as flame resistant according to UL 94 and the material complies with the heat deflection criteria specified in UL 1995. Provide galvanized or factory finished ferrous metal surfaces with corrosion resistant enamel, and access doors or removable panels for piping and control compartments, plus easy access for filter replacement. Provide duct discharge collar for concealed models.

2.11.1.2 Fans

Provide steel or aluminum, multiblade, centrifugal type fans. In lieu of

metal, fans and scrolls could be of non-metallic materials of suitably reinforced compounds with smooth surfaces. Dynamically and statically balance the fans. Provide accessible assemblies for maintenance. Disassemble and re-assemble by means of mechanical fastening devices and not by epoxies or cements.

2.11.1.3 Coils

Fabricate coils from not less than 3/8 inch outside diameter seamless copper tubing, with copper or aluminum fins mechanically bonded or soldered to the tubes. Provide coils with not less than 1/2 inch outside diameter flare or sweat connectors, accessory piping package with thermal connections suitable for connection to the type of control valve supplied, and manual air vent. Test coils hydrostatically at 300 psi or under water at 250 psi air pressure. Provide coils suitable for 200 psi working pressure. Make provisions for coil removal.

2.11.1.4 Drain Pans

Size and locate drain and drip pans to collect all water condensed on and dripping from any item within the unit enclosure or casing. Provide condensate drain pans designed for self-drainage to preclude the buildup of microbial slime and thermally insulated to prevent condensation and constructed of not lighter than 21 gauge type 304 stainless steel or noncorrosive ABS plastic. Provide insulation with a flame spread rating not over 25 without evidence of continued progressive combustion, a smoke developed rating no higher than 50, and of a waterproof type or coated with a waterproofing material. Design drain pans so as to allow no standing water and pitch to drain. Provide minimum 3/4 inch NPT or 5/8 inch OD drain connection in drain pan. Provide plastic or metal auxiliary drain pans to catch drips from control and piping packages, eliminating insulation of the packages; if metal, provide auxiliary pans that comply with the requirements specified above. Extend insulation at control and piping connections 1 inch minimum over the auxiliary drain pan.

2.11.1.5 Manually Operated Outside Air Dampers

Provide manually operated outside air dampers according to the arrangement indicated, and parallel airfoil type dampers of galvanized construction. Provide blades that rotate on stainless steel or nylon sleeve bearings.

2.11.1.6 Filters

Provide disposable type filter that complies with ASHRAE 52.2. Filters in each unit shall be removable without the use of tools.

2.11.1.7 Motors

Provide motors of the permanent split-capacitor type with built-in thermal overload protection, directly connected to unit fans. Provide motor switch with two or three speeds and off, manually operated, and mounted on an identified plate inside the unit below or behind an access door. In lieu of the above fan speed control, a solid-state variable-speed controller having a minimum speed reduction of 50 percent is allowed. Provide motors with permanently-lubricated or oilable sleeve-type or combination ball and sleeve-type bearings with vibration isolating mountings suitable for continuous duty. Provide a motor power consumption, shown in watts, at the fan operating speed selected to meet the specified capacity that does not exceed the following values:

Free Discharge Motors			
Unit Capacity (cfm)	Maximum Power Consumption (Watts)		
	115V	230V	277V
200	70	110	90
300	100	110	110
400	170	150	150
600	180	210	220
800	240	240	230
1000	310	250	270
1200	440	400	440

High Static Motors	
Unit Capacity (cfm)	Maximum Power Consumption (Watts)
200	145
300	145
400	210
600	320
800	320
1000	530
1200	530

2.11.2 Coil Induction Units

Provide base unit that includes air plenums, air-discharge nozzles, air discharge grilles, recirculation grilles, water coil assembly, valve and piping package, condensate drain pan, and adjustable air-balancing dampers, plus an enclosure for cabinet models and casing for concealed models. Make each unit capable of producing not less than the capacity indicated without exceeding the indicated static pressure. Provide a sound power level as indicated with power level data or values for these units based on tests conducted according to ASA S12.51. Sound power values apply to units provided with factory fabricated cabinet enclosures and standard grilles. The values obtained for the standard cabinet models are acceptable for concealed models without separate tests, provided there is no variation between models as to coil configuration, air discharge

nozzles, air balancing dampers, or relative arrangement of parts. Provide automatic valves and controls as specified in paragraph SUPPLEMENTAL COMPONENTS/SERVICES, subparagraph CONTROLS. Secure each unit to the building structure. Provide units with capacity indicated.

2.11.2.1 Enclosures

Fabricate enclosures from not lighter than 18 gauge steel, reinforced and braced. Provide a removable front panel of enclosure and insulate when required acoustically and to prevent condensation. Provide discharge grilles that are adjustable and properly distribute air throughout the conditioned space. Plastic discharge and return grilles are not acceptable. Provide access doors for all piping and control compartments.

2.11.2.2 Air Plenums

Fabricate plenums from galvanized steel with interior acoustically baffled and lined with sound absorbing material to attenuate the sound power from the primary air supply to the room. Provide heat-resistant nozzles that are integral with or attached airtight to the plenum. Where coil induction units are supplied with vertical runouts, furnish a streamlined, vaned, mitered elbow transition piece for connection between the unit and ductwork. Provide an adjustable air-balancing damper in each unit.

2.11.2.3 Coils

Fabricate coils from not less than 3/8 inch outside diameter seamless copper tubing, with copper or aluminum fins, mechanically bonded or soldered to the tubes. Furnish coil connections with not less than 1/2 inch outside diameter flare or sweat connectors, accessory piping package with terminal connections suitable for connection to the type of control valve supplied, and manual air vent. Test coils hydrostatically at 300 psi or under water at 250 psi air pressure and provide coils suitable for 200 psi working pressure.

2.11.2.4 Screens

Provide easily accessible lint screens or throwaway filters for each unit.

2.11.2.5 Drain Pan

Size and locate drain and drip pans to collect condensed water dripping from any item within the unit enclosure. Provide drain pans constructed of not lighter than 21 gauge steel, galvanized after fabrication, and thermally insulated to prevent condensation. Provide insulation that has a flame spread rating not over 25 without evidence of continued progressive combustion, a smoke developed rating no higher than 50, and that is a waterproof type or coated with a waterproofing material. In lieu of the above, drain pans constructed of die-formed 22 gauge steel are allowed, formed from a single sheet and galvanized after fabrication and insulated and coated as for the 21 gauge steel material or of die-formed 21 gauge type 304 stainless steel insulated as specified above. Pitch drain pans to drain. Provide drain connection when a condensate drain system is indicated. Make connection a minimum 3/4 inch NPT or 5/8 inch OD.

2.12 FACTORY PAINTING

Factory paint new equipment, which are not of galvanized construction.

Paint with a corrosion resisting paint finish according to ASTM A123/A123M or ASTM A924/A924M. Clean, phosphatize and coat internal and external ferrous metal surfaces with a paint finish which has been tested according to ASTM B117, ASTM D1654, and ASTM D3359. Submit evidence of satisfactory paint performance for a minimum of 125 hours for units to be installed indoors and 500 hours for units to be installed outdoors. Provide rating of failure at the scribe mark that is not less than 6, average creepage not greater than 1/8 inch. Provide rating of the inscribed area that is not less than 10, no failure. On units constructed of galvanized steel that have been welded, provide a final shop docket of zinc-rich protective paint on exterior surfaces of welds or welds that have burned through from the interior according to ASTM D520 Type I.

Factory painting that has been damaged prior to acceptance by the Contracting Officer shall be field painted in compliance with the requirements of paragraph FIELD PAINTING OF MECHANICAL EQUIPMENT.

2.13 SUPPLEMENTAL COMPONENTS/SERVICES

2.13.1 Chilled, Condenser, or Dual Service Water Piping

The requirements for chilled, condenser, or dual service water piping and accessories are specified in Section 23 64 26 CHILLED, CHILLED-HOT, AND CONDENSER WATER PIPING SYSTEMS

2.13.2 Refrigerant Piping

The requirements for refrigerant piping are specified in Section 23 23 00 REFRIGERANT PIPING.

2.13.3 Insulation

The requirements for shop and field applied insulation are specified in Section 23 07 00 THERMAL INSULATION FOR MECHANICAL SYSTEMS.

2.13.4 Controls

The requirements for controls are specified in Section 23 05 93 TESTING, ADJUSTING, AND BALANCING OF HVAC SYSTEMS.

PART 3 EXECUTION

3.1 EXAMINATION

After becoming familiar with all details of the work, verify all dimensions in the field, and advise the Contracting Officer of any discrepancy before performing the work.

3.2 INSTALLATION

a. Install materials and equipment in accordance with the requirements of the contract drawings and approved manufacturer's installation instructions. Accomplish installation by workers skilled in this type of work. Perform installation so that there is no degradation of the designed fire ratings of walls, partitions, ceilings, and floors.

b. No installation is permitted to block or otherwise impede access to any existing machine or system. Install all hinged doors to swing open a minimum of 120 degrees. Provide an area in front of all access

doors that clears a minimum of 3 feet. In front of all access doors to electrical circuits, clear the area the minimum distance to energized circuits as specified in OSHA Standards, part 1910.333 (Electrical-Safety Related work practices)and an additional 3 feet.

c. Except as otherwise indicated, install emergency switches and alarms in conspicuous locations. Mount all indicators, to include gauges, meters, and alarms in order to be easily visible by people in the area.

3.2.1 Condensate Drain Lines

Provide water seals in the condensate drain from all units . Provide a depth of each seal of 2 inches plus the number of inches, measured in water gauge, of the total static pressure rating of the unit to which the drain is connected. Provide water seals that are constructed of 2 tees and an appropriate U-bend with the open end of each tee plugged. Provide pipe cap or plug cleanouts where indicated. Connect drains indicated to connect to the sanitary waste system using an indirect waste fitting. Insulate air conditioner drain lines as specified in Section 23 07 00 THERMAL INSULATION FOR MECHANICAL SYSTEMS.

3.2.2 Equipment and Installation

Provide frames and supports for tanks, compressors, pumps, valves, air handling units, fans, coils, dampers, and other similar items requiring supports. Floor mount or ceiling hang air handling units as indicated. Anchor and fasten as detailed. Set floor-mounted equipment on not less than 6 inch concrete pads or curbs doweled in place unless otherwise indicated. Make concrete foundations heavy enough to minimize the intensity of the vibrations transmitted to the piping, duct work and the surrounding structure, as recommended in writing by the equipment manufacturer. In lieu of a concrete pad foundation, build a concrete pedestal block with isolators placed between the pedestal block and the floor. Make the concrete foundation or concrete pedestal block a mass not less than three times the weight of the components to be supported. Provide the lines connected to the pump mounted on pedestal blocks with flexible connectors. Submit foundation drawings as specified in paragraph DETAIL DRAWINGS. .

3.2.3 Access Panels

Install access panels for concealed valves, vents, controls, dampers, and items requiring inspection or maintenance of sufficient size, and locate them so that the concealed items are easily serviced and maintained or completely removed and replaced. Provide access panels as specified in Section 05 50 13 MISCELLANEOUS METAL FABRICATIONS.

3.2.4 Acoustical Duct Lining

Apply lining in cut-to-size pieces attached to the interior of the duct with nonflammable fire resistant adhesive conforming to ASTM C916, Type I, NFPA 90A, UL 723, and ASTM E84. Provide top and bottom pieces that lap the side pieces and are secured with welded pins, adhered clips of metal, nylon, or high impact plastic, and speed washers or welding cup-head pins installed according to SMACNA 1966. Provide welded pins, cup-head pins, or adhered clips that do not distort the duct, burn through, nor mar the finish or the surface of the duct. Make pins and washers flush with the surfaces of the duct liner and seal all breaks and punctures of the duct liner coating with the nonflammable, fire resistant adhesive. Coat

exposed edges of the liner at the duct ends and at other joints where the lining is subject to erosion with a heavy brush coat of the nonflammable, fire resistant adhesive, to prevent delamination of glass fibers. Apply duct liner to flat sheet metal prior to forming duct through the sheet metal brake. Additionally secure lining at the top and bottom surfaces of the duct by welded pins or adhered clips as specified for cut-to-size pieces. Other methods indicated in SMACNA 1966 to obtain proper installation of duct liners in sheet metal ducts, including adhesives and fasteners, are acceptable.

3.2.5 Dust Control

To prevent the accumulation of dust, debris and foreign material during construction, perform temporary dust control protection. Protect the distribution system (supply and return) with temporary seal-offs at all inlets and outlets at the end of each day's work. Keep temporary protection in place until system is ready for startup.

3.2.6 Insulation

Provide thickness and application of insulation materials for ductwork, piping, and equipment according to Section 23 07 00 THERMAL INSULATION FOR MECHANICAL SYSTEMS. Externally insulate outdoor air intake ducts and plenums .

3.2.7 Duct Test Holes

Provide holes with closures or threaded holes with plugs in ducts and plenums as indicated or where necessary for the use of pitot tube in balancing the air system. Plug insulated duct at the duct surface, patched over with insulation and then marked to indicate location of test hole if needed for future use.

3.2.8 Power Transmission Components Adjustment

Test V-belts and sheaves for proper alignment and tension prior to operation and after 72 hours of operation at final speed. Uniformly load belts on drive side to prevent bouncing. Make alignment of direct driven couplings to within 50 percent of manufacturer's maximum allowable range of misalignment.

3.3 EQUIPMENT PADS

Provide equipment pads to the dimensions shown or, if not shown, to conform to the shape of each piece of equipment served with a minimum 3-inch margin around the equipment and supports. Allow equipment bases and foundations, when constructed of concrete or grout, to cure a minimum of 28 calendar days before being loaded.

3.4 CUTTING AND PATCHING

Install work in such a manner and at such time that a minimum of cutting and patching of the building structure is required. Make holes in exposed locations, in or through existing floors, by drilling and smooth by sanding. Use of a jackhammer is permitted only where specifically approved. Make holes through masonry walls to accommodate sleeves with an iron pipe masonry core saw.

3.5 CLEANING

Thoroughly clean surfaces of piping and equipment that have become covered with dirt, plaster, or other material during handling and construction before such surfaces are prepared for final finish painting or are enclosed within the building structure. Before final acceptance, clean mechanical equipment, including piping, ducting, and fixtures, and free from dirt, grease, and finger marks. When the work area is in an occupied space such as office, laboratory or warehouse or shop areas, protect all furniture and equipment from dirt and debris. Incorporate housekeeping for field construction work which leaves all furniture and equipment in the affected area free of construction generated dust and debris; and, all floor surfaces vacuum-swept clean.

3.6 PENETRATIONS

Provide sleeves and prepared openings for duct mains, branches, and other penetrating items, and install during the construction of the surface to be penetrated. Cut sleeves flush with each surface. Place sleeves for round duct 15 inches and smaller. Build framed, prepared openings for round duct larger than 15 inches and square, rectangular or oval ducts. Sleeves and framed openings are also required where grilles, registers, and diffusers are installed at the openings. Provide one inch clearance between penetrating and penetrated surfaces except at grilles, registers, and diffusers. Pack spaces between sleeve or opening and duct or duct insulation with mineral fiber conforming with ASTM C553, Type 1, Class B-2.

3.6.1 Sleeves

Fabricate sleeves, except as otherwise specified or indicated, from 20 gauge thick mill galvanized sheet metal. Where sleeves are installed in bearing walls or partitions, provide black steel pipe conforming with ASTM A53/A53M, Schedule 20.

3.6.2 Framed Prepared Openings

Fabricate framed prepared openings from 20 gauge galvanized steel, unless otherwise indicated.

3.6.3 Insulation

Provide duct insulation in accordance with Section 23 07 00 THERMAL INSULATION FOR MECHANICAL SYSTEMS continuous through sleeves and prepared openings except firewall penetrations. Terminate duct insulation at fire dampers and flexible connections. For duct handling air at or below 60 degrees F, provide insulation continuous over the damper collar and retaining angle of fire dampers, which are exposed to unconditioned air.

3.6.4 Closure Collars

Provide closure collars of a minimum 4 inches wide, unless otherwise indicated, for exposed ducts and items on each side of penetrated surface, except where equipment is installed. Install collar tight against the surface and fit snugly around the duct or insulation. Grind sharp edges smooth to prevent damage to penetrating surface. Fabricate collars for round ducts 15 inches in diameter or less from 20 gauge galvanized steel. Fabricate collars for square and rectangular ducts, or round ducts with minimum dimension over 15 inches from 18 gauge galvanized steel. Fabricate collars for square and rectangular ducts with a maximum side of

15 inches or less from 20 gauge galvanized steel. Install collars with fasteners a maximum of 6 inches on center. Attach to collars a minimum of 4 fasteners where the opening is 12 inches in diameter or less, and a minimum of 8 fasteners where the opening is 20 inches in diameter or less.

3.6.5 Firestopping

Where ducts pass through fire-rated walls, fire partitions, and fire rated chase walls, seal the penetration with fire stopping materials as specified in Section 07 84 00 FIRESTOPPING.

3.7 FIELD PAINTING OF MECHANICAL EQUIPMENT

Clean, pretreat, prime and paint metal surfaces; except aluminum surfaces need not be painted. Apply coatings to clean dry surfaces. Clean the surfaces to remove dust, dirt, rust, oil and grease by wire brushing and solvent degreasing prior to application of paint, except clean to bare metal on metal surfaces subject to temperatures in excess of 120 degrees F. Where more than one coat of paint is specified, apply the second coat after the preceding coat is thoroughly dry. Lightly sand damaged painting and retouch before applying the succeeding coat. Provide aluminum or light gray finish coat.

3.7.1 Temperatures less than 120 degrees F

Immediately after cleaning, apply one coat of pretreatment primer applied to a minimum dry film thickness of 0.3 mil, one coat of primer applied to a minimum dry film thickness of one mil; and two coats of enamel applied to a minimum dry film thickness of one mil per coat to metal surfaces subject to temperatures less than 120 degrees F.

3.7.2 Temperatures between 120 and 400 degrees F

Apply two coats of 400 degrees F heat-resisting enamel applied to a total minimum thickness of two mils to metal surfaces subject to temperatures between 120 and 400 degrees F.

3.8 IDENTIFICATION SYSTEMS

Provide identification tags made of brass, engraved laminated plastic, or engraved anodized aluminum, indicating service and item number on all valves and dampers. Provide tags that are 1-3/8 inch minimum diameter with stamped or engraved markings. Make indentations black for reading clarity. Attach tags to valves with No. 12 AWG 0.0808-inch diameter corrosion-resistant steel wire, copper wire, chrome-plated beaded chain or plastic straps designed for that purpose.

3.9 DUCTWORK LEAK TESTS

The requirements for ductwork leak tests are specified in Section 23 05 93 TESTING, ADJUSTING AND BALANCING FOR HVAC.

3.10 DAMPER ACCEPTANCE TEST

Submit the proposed schedule, at least 2 weeks prior to the start of test. Operate all fire dampers and smoke dampers under normal operating conditions, prior to the occupancy of a building to determine that they function properly. Test each fire damper equipped with fusible link by having the fusible link cut in place. Test dynamic fire dampers with the

air handling and distribution system running. Reset all fire dampers with the fusible links replaced after acceptance testing. To ensure optimum operation and performance, install the damper so it is square and free from racking.

3.11 TESTING, ADJUSTING, AND BALANCING

The requirements for testing, adjusting, and balancing are specified in Section 23 05 93 TESTING, ADJUSTING AND BALANCING FOR HVAC. Begin testing, adjusting, and balancing only when the air supply and distribution, including controls, has been completed, with the exception of performance tests.

3.12 PERFORMANCE TESTS

After testing, adjusting, and balancing is complete as specified, test each system as a whole to see that all items perform as integral parts of the system and temperatures and conditions are evenly controlled throughout the building. Record the testing during the applicable season. Make corrections and adjustments as necessary to produce the conditions indicated or specified. Conduct capacity tests and general operating tests by an experienced engineer. Provide tests that cover a period of not less than 1 days for each system and demonstrate that the entire system is functioning according to the specifications. Make coincidental chart recordings at points indicated on the drawings for the duration of the time period and record the temperature at space thermostats or space sensors, the humidity at space humidistats or space sensors and the ambient temperature and humidity in a shaded and weather protected area.

Submit test reports for the ductwork leak test, and performance tests in booklet form, upon completion of testing. Document phases of tests performed including initial test summary, repairs/adjustments made, and final test results in the reports.

3.13 CLEANING AND ADJUSTING

Provide a temporary bypass for water coils to prevent flushing water from passing through coils. Inside of room fan-coil units thoroughly clean ducts, plenums, and casing of debris and blow free of small particles of rubbish and dust and then vacuum clean before installing outlet faces. Wipe equipment clean, with no traces of oil, dust, dirt, or paint spots. Provide temporary filters prior to startup of all fans that are operated during construction, and install new filters after all construction dirt has been removed from the building, and the ducts, plenums, casings, and other items specified have been vacuum cleaned. Maintain system in this clean condition until final acceptance. Properly lubricate bearings with oil or grease as recommended by the manufacturer. Tighten belts to proper tension. Adjust control valves and other miscellaneous equipment requiring adjustment to setting indicated or directed. Adjust fans to the speed indicated by the manufacturer to meet specified conditions. Maintain all equipment installed under the contract until close out documentation is received, the project is completed and the building has been documented as beneficially occupied.

3.14 OPERATION AND MAINTENANCE

3.14.1 Operation and Maintenance Manuals

Submit six manuals at least 2 weeks prior to field training. Submit data complying with the requirements specified in Section 01 78 23 OPERATION AND MAINTENANCE DATA. Submit Data Package 3 for the items/units listed under SD-10 Operation and Maintenance Data

3.14.2 Operation And Maintenance Training

Conduct a training course for the members of the operating staff as designated by the Contracting Officer. Make the training period consist of a total of 40 hours of normal working time and start it after all work specified herein is functionally completed and the Performance Tests have been approved. Conduct field instruction that covers all of the items contained in the Operation and Maintenance Manuals as well as demonstrations of routine maintenance operations. Submit the proposed On-site Training schedule concurrently with the Operation and Maintenance Manuals and at least 14 days prior to conducting the training course.

-- End of Section --

SECTION 23 03 00.00 20

BASIC MECHANICAL MATERIALS AND METHODS
08/10

PART 1 GENERAL

1.1 REFERENCES

The publications listed below form a part of this specification to the extent referenced. The publications are referred to within the text by the basic designation only.

ASTM INTERNATIONAL (ASTM)

ASTM B117	(2011) Standard Practice for Operating Salt Spray (Fog) Apparatus

INSTITUTE OF ELECTRICAL AND ELECTRONICS ENGINEERS (IEEE)

IEEE C2	(2012; Errata 2012; INT 1-4 2012; INT 5-7 2013) National Electrical Safety Code

NATIONAL ELECTRICAL MANUFACTURERS ASSOCIATION (NEMA)

NEMA MG 1	(2011; Errata 2012) Motors and Generators
NEMA MG 10	(2013) Energy Management Guide for Selection and Use of Fixed Frequency Medium AC Squirrel-Cage Polyphase Induction Motors
NEMA MG 11	(1977; R 2012) Energy Management Guide for Selection and Use of Single Phase Motors

NATIONAL FIRE PROTECTION ASSOCIATION (NFPA)

NFPA 70	(2014; AMD 1 2013; Errata 1 2013; AMD 2 2013; Errata 2 2013; AMD 3 2014; Errata 3 2014) National Electrical Code

1.2 RELATED REQUIREMENTS

This section applies to all sections of Divisions: 21, FIRE SUPPRESSION; 22, PLUMBING; and 23, HEATING, VENTILATING, AND AIR CONDITIONING of this project specification, unless specified otherwise in the individual section.

1.3 QUALITY ASSURANCE

1.3.1 Material and Equipment Qualifications

Provide materials and equipment that are standard products of manufacturers regularly engaged in the manufacture of such products, which are of a similar material, design and workmanship. Standard products shall have been in satisfactory commercial or industrial use for 2 years prior to bid opening. The 2-year use shall include applications of equipment and materials under similar circumstances and of similar size.

The product shall have been for sale on the commercial market through advertisements, manufacturers' catalogs, or brochures during the 2 year period.

1.3.2 Alternative Qualifications

Products having less than a two-year field service record will be acceptable if a certified record of satisfactory field operation for not less than 6000 hours, exclusive of the manufacturer's factory or laboratory tests, can be shown.

1.3.3 Service Support

The equipment items shall be supported by service organizations. Submit a certified list of qualified permanent service organizations for support of the equipment which includes their addresses and qualifications. These service organizations shall be reasonably convenient to the equipment installation and able to render satisfactory service to the equipment on a regular and emergency basis during the warranty period of the contract.

1.3.4 Manufacturer's Nameplate

Each item of equipment shall have a nameplate bearing the manufacturer's name, address, model number, and serial number securely affixed in a conspicuous place; the nameplate of the distributing agent will not be acceptable.

1.3.5 Modification of References

In each of the publications referred to herein, consider the advisory provisions to be mandatory, as though the word, "shall" had been substituted for "should" wherever it appears. Interpret references in these publications to the "authority having jurisdiction", or words of similar meaning, to mean the Contracting Officer.

1.3.5.1 Definitions

For the International Code Council (ICC) Codes referenced in the contract documents, advisory provisions shall be considered mandatory, the word "should" shall be interpreted as "shall." Reference to the "code official" shall be interpreted to mean the "Contracting Officer." For Navy owned property, references to the "owner" shall be interpreted to mean the "Contracting Officer." For leased facilities, references to the "owner" shall be interpreted to mean the "lessor." References to the "permit holder" shall be interpreted to mean the "Contractor."

1.3.5.2 Administrative Interpretations

For ICC Codes referenced in the contract documents, the provisions of Chapter 1, "Administrator," do not apply. These administrative requirements are covered by the applicable Federal Acquisition Regulations (FAR) included in this contract and by the authority granted to the Officer in Charge of Construction to administer the construction of this project. References in the ICC Codes to sections of Chapter 1, shall be applied appropriately by the Contracting Officer as authorized by his administrative cognizance and the FAR.

1.4 DELIVERY, STORAGE, AND HANDLING

Handle, store, and protect equipment and materials to prevent damage before and during installation in accordance with the manufacturer's recommendations, and as approved by the Contracting Officer. Replace damaged or defective items.

1.5 ELECTRICAL REQUIREMENTS

Furnish motors, controllers, disconnects and contactors with their respective pieces of equipment. Motors, controllers, disconnects and contactors shall conform to and have electrical connections provided under Section 26 20 00 INTERIOR DISTRIBUTION SYSTEM. Furnish internal wiring for components of packaged equipment as an integral part of the equipment. Extended voltage range motors will not be permitted. Controllers and contactors shall have a maximum of 120 volt control circuits, and shall have auxiliary contacts for use with the controls furnished. When motors and equipment furnished are larger than sizes indicated, the cost of additional electrical service and related work shall be included under the section that specified that motor or equipment. Power wiring and conduit for field installed equipment shall be provided under and conform to the requirements of Section 26 20 00 INTERIOR DISTRIBUTION SYSTEM.

1.6 ELECTRICAL INSTALLATION REQUIREMENTS

Electrical installations shall conform to IEEE C2, NFPA 70, and requirements specified herein.

1.6.1 New Work

Provide electrical components of mechanical equipment, such as motors, motor starters (except starters/controllers which are indicated as part of a motor control center), control or push-button stations, float or pressure switches, solenoid valves, integral disconnects, and other devices functioning to control mechanical equipment, as well as control wiring and conduit for circuits rated 100 volts or less, to conform with the requirements of the section covering the mechanical equipment. Extended voltage range motors shall not be permitted. The interconnecting power wiring and conduit, control wiring rated 120 volts (nominal) and conduit, the motor control equipment forming a part of motor control centers, and the electrical power circuits shall be provided under Division 26, except internal wiring for components of package equipment shall be provided as an integral part of the equipment. When motors and equipment furnished are larger than sizes indicated, provide any required changes to the electrical service as may be necessary and related work as a part of the work for the section specifying that motor or equipment.

1.6.2 Modifications to Existing Systems

Where existing mechanical systems and motor-operated equipment require modifications, provide electrical components under Division 26.

1.6.3 High Efficiency Motors

1.6.3.1 High Efficiency Single-Phase Motors

Unless otherwise specified, single-phase fractional-horsepower alternating-current motors shall be high efficiency types corresponding to the applications listed in NEMA MG 11.

1.6.3.2 High Efficiency Polyphase Motors

Unless otherwise specified, polyphase motors shall be selected based on high efficiency characteristics relative to the applications as listed in NEMA MG 10. Additionally, polyphase squirrel-cage medium induction motors with continuous ratings shall meet or exceed energy efficient ratings in accordance with Table 12-6C of NEMA MG 1.

1.6.4 Three-Phase Motor Protection

Provide controllers for motors rated one 1 horsepower and larger with electronic phase-voltage monitors designed to protect motors from phase-loss, undervoltage, and overvoltage. Provide protection for motors from immediate restart by a time adjustable restart relay.

1.7 INSTRUCTION TO GOVERNMENT PERSONNEL

When specified in other sections, furnish the services of competent instructors to give full instruction to the designated Government personnel in the adjustment, operation, and maintenance, including pertinent safety requirements, of the specified equipment or system. Instructors shall be thoroughly familiar with all parts of the installation and shall be trained in operating theory as well as practical operation and maintenance work.

Instruction shall be given during the first regular work week after the equipment or system has been accepted and turned over to the Government for regular operation. The number of man-days (8 hours per day) of instruction furnished shall be as specified in the individual section. When more than 4 man-days of instruction are specified, use approximately half of the time for classroom instruction. Use other time for instruction with the equipment or system.

When significant changes or modifications in the equipment or system are made under the terms of the contract, provide additional instruction to acquaint the operating personnel with the changes or modifications.

1.8 ACCESSIBILITY

Install all work so that parts requiring periodic inspection, operation, maintenance, and repair are readily accessible. Install concealed valves, expansion joints, controls, dampers, and equipment requiring access, in locations freely accessible through access doors.

PART 2 PRODUCTS

Not Used

PART 3 EXECUTION

3.1 PAINTING OF NEW EQUIPMENT

New equipment painting shall be factory applied or shop applied, and shall be as specified herein, and provided under each individual section.

3.1.1 Factory Painting Systems

Manufacturer's standard factory painting systems may be provided subject

to certification that the factory painting system applied will withstand 125 hours in a salt-spray fog test, except that equipment located outdoors shall withstand 500 hours in a salt-spray fog test. Salt-spray fog test shall be in accordance with ASTM B117, and for that test the acceptance criteria shall be as follows: immediately after completion of the test, the paint shall show no signs of blistering, wrinkling, or cracking, and no loss of adhesion; and the specimen shall show no signs of rust creepage beyond 0.125 inch on either side of the scratch mark.

The film thickness of the factory painting system applied on the equipment shall not be less than the film thickness used on the test specimen. If manufacturer's standard factory painting system is being proposed for use on surfaces subject to temperatures above 120 degrees F, the factory painting system shall be designed for the temperature service.

3.1.2 Shop Painting Systems for Metal Surfaces

Clean, pretreat, prime and paint metal surfaces; except aluminum surfaces need not be painted. Apply coatings to clean dry surfaces. Clean the surfaces to remove dust, dirt, rust, oil and grease by wire brushing and solvent degreasing prior to application of paint, except metal surfaces subject to temperatures in excess of 120 degrees F shall be cleaned to bare metal.

Where more than one coat of paint is specified, apply the second coat after the preceding coat is thoroughly dry. Lightly sand damaged painting and retouch before applying the succeeding coat. Color of finish coat shall be aluminum or light gray.

a. Temperatures Less Than 120 Degrees F: Immediately after cleaning, the metal surfaces subject to temperatures less than 120 degrees F shall receive one coat of pretreatment primer applied to a minimum dry film thickness of 0.3 mil, one coat of primer applied to a minimum dry film thickness of 1 mil; and two coats of enamel applied to a minimum dry film thickness of 1 mil per coat.

b. Temperatures Between 120 and 400 Degrees F: Metal surfaces subject to temperatures between 120 and 400 degrees F shall receive two coats of 400 degrees F heat-resisting enamel applied to a total minimum thickness of 2 mils.

c. Temperatures Greater Than 400 Degrees F: Metal surfaces subject to temperatures greater than 400 degrees F shall receive two coats of 600 degrees F heat-resisting paint applied to a total minimum dry film thickness of 2 mils.

-- End of Section --

SECTION 23 05 15

COMMON PIPING FOR HVAC
02/14

PART 1 GENERAL

1.1 REFERENCES

The publications listed below form a part of this specification to the extent referenced. The publications are referred to within the text by the basic designation only.

AMERICAN WELDING SOCIETY (AWS)

AWS A5.8/A5.8M	(2011; Amendment 2012) Specification for Filler Metals for Brazing and Braze Welding
AWS WHB-2.9	(2004) Welding Handbook; Volume 2, Welding Processes, Part 1

ASME INTERNATIONAL (ASME)

ASME A112.19.2/CSA B45.1	(2013) Standard for Vitreous China Plumbing Fixtures and Hydraulic Requirements for Water Closets and Urinals
ASME B16.22	(2013) Standard for Wrought Copper and Copper Alloy Solder Joint Pressure Fittings
ASME B16.3	(2011) Malleable Iron Threaded Fittings, Classes 150 and 300
ASME B16.39	(2009) Standard for Malleable Iron Threaded Pipe Unions; Classes 150, 250, and 300
ASME B16.5	(2013) Pipe Flanges and Flanged Fittings: NPS 1/2 Through NPS 24 Metric/Inch Standard
ASME B16.9	(2012) Standard for Factory-Made Wrought Steel Buttwelding Fittings
ASME B31.3	(2012) Process Piping
ASME BPVC SEC IX	(2010) BPVC Section IX-Welding and Brazing Qualifications

ASTM INTERNATIONAL (ASTM)

ASTM A197/A197M	(2000; R 2011) Standard Specification for Cupola Malleable Iron
ASTM A234/A234M	(2013; E 2014) Standard Specification for Piping Fittings of Wrought Carbon Steel and Alloy Steel for Moderate and High Temperature Service

ASTM A307	(2012) Standard Specification for Carbon Steel Bolts and Studs, 60 000 PSI Tensile Strength
ASTM A53/A53M	(2012) Standard Specification for Pipe, Steel, Black and Hot-Dipped, Zinc-Coated, Welded and Seamless
ASTM A563	(2007a; R2014) Standard Specification for Carbon and Alloy Steel Nuts
ASTM B117	(2011) Standard Practice for Operating Salt Spray (Fog) Apparatus
ASTM B370	(2012) Standard Specification for Copper Sheet and Strip for Building Construction
ASTM B749	(2003; R 2009) Standard Specification for Lead and Lead Alloy Strip, Sheet and Plate Products
ASTM B88	(2009) Standard Specification for Seamless Copper Water Tube
ASTM C553	(2013) Standard Specification for Mineral Fiber Blanket Thermal Insulation for Commercial and Industrial Applications
ASTM C920	(2014a) Standard Specification for Elastomeric Joint Sealants
ASTM E814	(2013a) Standard Test Method for Fire Tests of Through-Penetration Fire Stops
ASTM F104	(2011) Standard Classification System for Nonmetallic Gasket Materials
ASTM F2389	(2010) Standard Specification for Pressure-rated Polypropylene (PP) Piping Systems

FLUID SEALING ASSOCIATION (FSA)

FSA-0017	(1995e6) Standard for Non-Metallic Expansion Joints and Flexible Pipe Connectors Technical Handbook

INSTITUTE OF ELECTRICAL AND ELECTRONICS ENGINEERS (IEEE)

IEEE C2	(2012; Errata 2012; INT 1-4 2012; INT 5-7 2013) National Electrical Safety Code

MANUFACTURERS STANDARDIZATION SOCIETY OF THE VALVE AND FITTINGS INDUSTRY (MSS)

MSS SP-58	(2009) Pipe Hangers and Supports - Materials, Design and Manufacture, Selection, Application, and Installation

NATIONAL ELECTRICAL MANUFACTURERS ASSOCIATION (NEMA)

NEMA MG 11	(1977; R 2012) Energy Management Guide for Selection and Use of Single Phase Motors

NATIONAL FIRE PROTECTION ASSOCIATION (NFPA)

NFPA 70	(2014; AMD 1 2013; Errata 1 2013; AMD 2 2013; Errata 2 2013; AMD 3 2014; Errata 3 2014) National Electrical Code

U.S. GENERAL SERVICES ADMINISTRATION (GSA)

CID A-A-1922	(Rev A; Notice 2) Shield, Expansion (Caulking Anchors, Single Lead)
CID A-A-1923	(Rev A; Notice 2) Shield, Expansion (Lag, Machine and Externally Threaded Wedge Bolt Anchors)
CID A-A-1924	(Rev A; Notice 2) Shield, Expansion (Self Drilling Tubular Expansion Shell Bolt Anchors
CID A-A-1925	(Rev A; Notice 2) Shield Expansion (Nail Anchors)
CID A-A-55614	(Basic; Notice 2) Shield, Expansion (Non-Drilling Expansion Anchors)
CID A-A-55615	(Basic; Notice 2) Shield, Expansion (Wood Screw and Lag Bolt Self-Threading Anchors

UNDERWRITERS LABORATORIES (UL)

UL 1479	(2003; Reprint Oct 2012) Fire Tests of Through-Penetration Firestops

1.2 GENERAL REQUIREMENTS

Section 23 00 00 AIR SUPPLY, DISTRIBUTION, VENTILATION, AND EXHAUST SYSTEMS applies to work specified in this section

Submit Records of Existing Conditions consisting of the results of Contractor's survey of work area conditions and features of existing structures and facilities within and adjacent to the jobsite. Commencement of work constitutes acceptance of the existing conditions.

Include with Equipment Foundation Data for piping systems all plan dimensions of foundations and relative elevations, equipment weight and operating loads, horizontal and vertical loads, horizontal and vertical clearances for installation, and size and location of anchor bolts.

Submit Fabrication Drawings for pipes, valves and specialties consisting of fabrication and assembly details to be performed in the factory.

Submit Material, Equipment, and Fixture Lists for pipes, valves and

specialties including manufacturer's style or catalog numbers, specification and drawing reference numbers, warranty information, and fabrication site information. Provide a complete list of construction equipment to be used.

Submit Manufacturer's Standard Color Charts for pipes, valves and specialties showing the manufacturer's recommended color and finish selections.

Include with Listing of Product Installations for piping systems identification of at least 5 units, similar to those proposed for use, that have been in successful service for a minimum period of 5 years. Include in the list purchaser, address of installation, service organization, and date of installation.

Submit Record Drawings for pipes, valves and accessories providing current factual information including deviations and amendments to the drawings, and concealed and visible changes in the work.

Submit Connection Diagrams for pipes, valves and specialties indicating the relations and connections of devices and apparatus by showing the general physical layout of all controls, the interconnection of one system (or portion of system) with another, and internal tubing, wiring, and other devices.

Submit Coordination Drawings for pipes, valves and specialties showing coordination of work between different trades and with the structural and architectural elements of work. Detail all drawings sufficiently to show overall dimensions of related items, clearances, and relative locations of work in allotted spaces. Indicate on drawings where conflicts or clearance problems exist between various trades.

1.3 SUBMITTALS

Government approval is required for submittals with a "G" designation; submittals not having a "G" designation are for Contractor Quality Control approval. Submit the following in accordance with Section 01 33 00 SUBMITTAL PROCEDURES:

SD-01 Preconstruction Submittals

Material, Equipment, and Fixture Lists; G

SD-02 Shop Drawings

Record Drawings; G

Connection Diagrams

Coordination Drawings

Fabrication Drawings

Installation Drawings

SD-03 Product Data

Pipe and Fittings; G

Piping Specialties; G

Valves; G

Miscellaneous Materials

Supporting Elements

Equipment Foundation Data

SD-04 Samples

Manufacturer's Standard Color Charts

SD-05 Design Data

Pipe and Fittings; G

Piping Specialties; G

Valves; G

SD-06 Test Reports

Hydrostatic Tests

Air Tests

Valve-Operating Tests

Drainage Tests

Pneumatic Tests

Non-Destructive Electric Tests

System Operation Tests

SD-07 Certificates

Record of Satisfactory Field Operation

List of Qualified Permanent Service Organizations

Listing of Product Installations

Records of Existing Conditions

Surface Resistance

Shear and Tensile Strengths

Temperature Ratings

Bending Tests

Flattening Tests

Transverse Guided Weld Bend Tests

SD-10 Operation and Maintenance Data

Operation and Maintenance Manuals

1.4 QUALITY ASSURANCE

1.4.1 Material and Equipment Qualifications

Provide materials and equipment that are standard products of manufacturers regularly engaged in the manufacture of such products, which are of a similar material, design and workmanship. Provide standard products in satisfactory commercial or industrial use for 2 years prior to bid opening. The 2-year use includes applications of equipment and materials under similar circumstances and of similar size. Ensure the product has been for sale on the commercial market through advertisements, manufacturers' catalogs, or brochures during the 2 year period.

1.4.2 Alternative Qualifications

Products having less than a two-year field service record are acceptable if a certified record of satisfactory field operation for not less than 6000 hours, exclusive of the manufacturer's factory or laboratory tests, can be shown.

1.4.3 Service Support

Ensure the equipment items are supported by service organizations. Submit a certified list of qualified permanent service organizations for support of the equipment which includes their addresses and qualifications. Select service organizations that are reasonably convenient to the equipment installation and able to render satisfactory service to the equipment on a regular and emergency basis during the warranty period of the contract.

1.4.4 Manufacturer's Nameplate

Provide a nameplate on each item of equipment bearing the manufacturer's name, address, model number, and serial number securely affixed in a conspicuous place; the nameplate of the distributing agent is not acceptable.

1.4.5 Modification of References

In each of the publications referred to herein, consider the advisory provisions to be mandatory, as though the word, "shall" had been substituted for "should" wherever it appears. Interpret references in these publications to the "authority having jurisdiction," or words of similar meaning, to mean the Contracting Officer.

1.4.5.1 Definitions

For the International Code Council (ICC) Codes referenced in the contract documents, advisory provisions are considered mandatory, the word "should" is interpreted as "shall." Reference to the "code official" is interpreted to mean the "Contracting Officer." For Navy owned property, interpret references to the "owner" to mean the "Contracting Officer." For leased facilities, references to the "owner" is interpreted to mean the "lessor." References to the "permit holder" are interpreted to mean

the "Contractor."

1.4.5.2 Administrative Interpretations

For ICC Codes referenced in the contract documents, the provisions of Chapter 1, "Administrator," do not apply. These administrative requirements are covered by the applicable Federal Acquisition Regulations (FAR) included in this contract and by the authority granted to the Officer in Charge of Construction to administer the construction of this project. References in the ICC Codes to sections of Chapter 1, are applied as appropriate by the Contracting Officer and as authorized by his administrative cognizance and the FAR.

1.5 DELIVERY, STORAGE, AND HANDLING

Handle, store, and protect equipment and materials to prevent damage before and during installation in accordance with the manufacturer's recommendations, and as approved by the Contracting Officer. Replace damaged or defective items.

1.6 ELECTRICAL REQUIREMENTS

Furnish motors, controllers, disconnects and contactors with their respective pieces of equipment. Ensure motors, controllers, disconnects and contactors conform to and have electrical connections provided under Section 26 20 00 INTERIOR DISTRIBUTION SYSTEM. Furnish internal wiring for components of packaged equipment as an integral part of the equipment. Extended voltage range motors is not permitted. Provide controllers and contactors with a maximum of 120 volt control circuits, and auxiliary contacts for use with the controls furnished. When motors and equipment furnished are larger than sizes indicated, include the cost of additional electrical service and related work under the section that specified that motor or equipment. Provide power wiring and conduit for field installed equipment under and conform to the requirements of Section 26 20 00 INTERIOR DISTRIBUTION SYSTEM.

1.7 ELECTRICAL INSTALLATION REQUIREMENTS

Ensure electrical installations conform to IEEE C2, NFPA 70, and requirements specified herein.

1.7.1 New Work

Provide electrical components of mechanical equipment, such as motors, motor starters (except starters/controllers which are indicated as part of a motor control center), control or push-button stations, float or pressure switches, solenoid valves, integral disconnects, and other devices functioning to control mechanical equipment, as well as control wiring and conduit for circuits rated 100 volts or less, to conform with the requirements of the section covering the mechanical equipment. Extended voltage range motors are not permitted. Provide under Division 26, the interconnecting power wiring and conduit, control wiring rated 120 volts (nominal) and conduit, the motor control equipment forming a part of motor control centers, and the electrical power circuits, except internal wiring for components of package equipment is provided as an integral part of the equipment. When motors and equipment furnished are larger than sizes indicated, provide any required changes to the electrical service as may be necessary and related work as a part of the work for the section

specifying that motor or equipment.

1.7.2 Modifications to Existing Systems

Where existing mechanical systems and motor-operated equipment require modifications, provide electrical components under Division 26.

1.7.3 High Efficiency Motors

1.7.3.1 High Efficiency Single-Phase Motors

Unless otherwise specified, provide high efficiency single-phase fractional-horsepower alternating-current motors corresponding to the applications listed in NEMA MG 11.

1.7.4 Three-Phase Motor Protection

Provide controllers for motors rated one one horsepower and larger with electronic phase-voltage monitors designed to protect motors from phase-loss, undervoltage, and overvoltage. Provide protection for motors from immediate restart by a time adjustable restart relay.

1.8 INSTRUCTION TO GOVERNMENT PERSONNEL

When specified in other sections, furnish the services of competent instructors to give full instruction to the designated Government personnel in the adjustment, operation, and maintenance, including pertinent safety requirements, of the specified equipment or system. Provide instructors thoroughly familiar with all parts of the installation and trained in operating theory as well as practical operation and maintenance work.

Give instruction during the first regular work week after the equipment or system has been accepted and turned over to the Government for regular operation. The number of man-days (8 hours per day) of instruction furnished is as specified in the individual section. When more than 4 man-days of instruction are specified, use approximately half of the time for classroom instruction. Use other time for instruction with the equipment or system.

When significant changes or modifications in the equipment or system are made under the terms of the contract, provide additional instruction to acquaint the operating personnel with the changes or modifications.

1.9 ACCESSIBILITY

Install all work so that parts requiring periodic inspection, operation, maintenance, and repair are readily accessible. Install concealed valves, expansion joints, controls, dampers, and equipment requiring access, in locations freely accessible through access doors.

PART 2 PRODUCTS

2.1 PIPE AND FITTINGS

Submit equipment and performance data for pipe and fittings consisting of corrosion resistance, life expectancy, gage tolerances, and grade line analysis. Submit design analysis and calculations consisting of surface resistance, rates of flow, head losses, inlet and outlet design, required

radius of bend, and pressure calculations. Also include in data pipe size, shape, and dimensions, as well as temperature ratings, vibration and thrust limitations minimum burst pressures, shut-off and non-shock pressures and weld characteristics.

2.1.1 Type BCS, Black Carbon Steel

Ensure pipe 1/8 through 12 inches is Schedule 40 black carbon steel, conforming to ASTM A53/A53M.

Ensure pipe 1/8 through 10 inches is Schedule 40 seamless or electric-resistance welded black carbon steel, conforming to ASTM A53/A53M, Type E, Grade B (electric-resistance welded) . Grade A should be used for permissible field bending, in both cases.

Ensure pipe 12 through 24 inches is 0.375-inch wall seamless black carbon steel, conforming to ASTM A53/A53M, Type E, Grade B (electric-resistance welded) .

Ensure fittings 2 inches and under are 150-pounds per square inch, gage (psig) working steam pressure (wsp) banded black malleable iron screwed, conforming to ASTM A197/A197M and ASME B16.3.

Ensure unions 2 inches and under are 250 pounds per square inch, wsp female, screwed, black malleable iron with brass-to-iron seat, and ground joint, conforming to ASME B16.39.

Ensure fittings 2-1/2 inches and over are Steel butt weld, conforming to ASTM A234/A234M and ASME B16.9 to match pipe wall thickness.

Ensure flanges 2-1/2 inches and over are 150-pound forged-steel conforming to ASME B16.5, welding neck to match pipe wall thickness.

2.1.2 Type CPR, Copper

2.1.2.1 Type CPR-A, Copper Above Ground

Ensure tubing 2 inches and under is seamless copper tubing, conforming to ASTM B88, Type L (hard-drawn for all horizontal and all exposed vertical lines, annealed for concealed vertical lines).

Ensure fittings 2 inches and under are 150-psig wsp wrought-copper solder joint fittings conforming to ASME B16.22.

Ensure unions 2 inches and under are 150-psig wsp wrought-copper solder joint, conforming to ASME B16.22.

Provide brazing rod with Classification BCuP-5, conforming to AWS A5.8/A5.8M.

2.2 PIPING SPECIALTIES

Submit equipment and performance data for piping specialties consisting of corrosion resistance, life expectancy, gage tolerances, and grade line analysis. Submit design analysis and calculations consisting of surface resistance, rates of flow, head losses, inlet and outlet design, required radius of bend, and pressure calculations. Also include in data pipe size, shape, and dimensions, as well as temperature ratings, vibration and thrust limitations minimum burst pressures, shut-off and non-shock

pressures and weld characteristics.

2.2.1 Dielectric Connections

Electrically insulate dissimlar pipe metals from each other by couplings, unions, or flanges commercially manufactured for that purpose and rated for the service pressure and temperature.

2.2.2 Expansion Vibration Isolation Joints

Construct single or multiple arch-flanged expansion vibration isolation joints of steel-ring reinforced chloroprene-impregnated cloth materials. Design joint to absorb the movement of the pipe sections in which installed with no detrimental effect on the pipe or connected equipment. Back flanges with ferrous-metal backing rings. Provide control rod assemblies to restrict joint movement. Coat all nonmetallic exterior surfaces of the joint with chlorosulphinated polyethylene. Provide grommets in limit bolt hole to absorb noise transmitted through the bolts.

Ensure joints are suitable for continuous-duty working temperature of at least 250 degrees F.

Fill arches with soft chloroprene.

Ensure joint, single-arch, movement limitations and size-related, pressure characteristics conform to FSA-0017.

2.2.3 Flexible Metallic Pipe

Ensure flexible pipe is the bellows-type with wire braid cover and designed, constructed, and rated in accordance with the applicable requirements of ASME B31.3.

Minimum working pressure rating is 100 psi at 300 degrees F.

2.2.4 Sleeve Couplings

Sleeve couplings for plain-end pipe consist of one steel middle ring, two steel followers, two chloroprene or Buna-N elastomer gaskets, and the necessary steel bolts and nuts.

2.3 VALVES

Submit equipment and performance data for valves consisting of corrosion resistance and life expectancy. Submit design analysis and calculations consisting of rates of flow, head losses, inlet and outlet design, and pressure calculations. Also include in data, pipe dimensions, as well as temperature ratings, vibration and thrust limitations, minimum burst pressures, shut-off and non-shock pressures and weld characteristics.

Polypropylene valves will comply with the performance requirements of ASTM F2389.

2.4 MISCELLANEOUS MATERIALS

Submit equipment and performance data for miscellaneous materials consisting of corrosion resistance, life expectancy, gage tolerances, and grade line analysis.

2.4.1 Bolting

Ensure flange and general purpose bolting is hex-head and conforms to ASTM A307, Grade B (bolts, for flanged joints in piping systems where one or both flanges are cast iron). Heavy hex-nuts conform to ASTM A563. Square-head bolts and nuts are not acceptable. Ensure threads are coarse-thread series.

2.4.2 Elastomer Caulk

Use two-component polysulfide- or polyurethane-base elastomer caulking material, conforming to ASTM C920.

2.4.3 Escutcheons

Manufacture escutcheons from nonferrous metals and chrome-plated except when AISI 300 series corrosion-resistant steel is provided. Ensure metals and finish conforms to ASME A112.19.2/CSA B45.1.

Use one-piece escutcheons where mounted on chrome-plated pipe or tubing, and one-piece of split-pattern type elsewhere. Ensure all escutcheons have provisions consisting of internal spring-tension devices for maintaining a fixed position against a surface.

2.4.4 Flashing

Ensure sheetlead conforms to ASTM B749, UNS Alloy Number L50049 (intended for use in laboratories and shops in general application) .

Ensure sheet copper conforms to ASTM B370 and be not less than 16 ounces per square foot weight.

2.4.5 Flange Gaskets

Provide compressed non-asbestos sheets, conforming to ASTM F104, coated on both sides with graphite or similar lubricant, with nitrile composition, binder rated to 750 degrees F.

2.4.6 Pipe Thread Compounds

Use polytetrafluoroethylene tape not less than 2 to 3 mils thick in potable and process water and in chemical systems for pipe sizes to and including 1-inch ips. Use polytetrafluoroethylene dispersions and other suitable compounds for all other applications upon approval by the Contracting Officer; however, do not use lead-containing compounds in potable water systems.

2.5 SUPPORTING ELEMENTS

Submit equipment and performance data for the supporting elements consisting of corrosion resistance, life expectancy, gage tolerances, and grade line analysis.

Provide all necessary piping systems and equipment supporting elements, including but not limited to: building structure attachments; supplementary steel; hanger rods, stanchions, and fixtures; vertical pipe attachments; horizontal pipe attachments; anchors; guides; and spring-cushion, variable, or constant supports. Ensure supporting

elements are suitable for stresses imposed by systems pressures and temperatures and natural and other external forces normal to this facility without damage to supporting element system or to work being supported.

Ensure supporting elements conform to requirements of ASME B31.3, and MSS SP-58, except as noted.

Ensure attachments welded to pipe are made of materials identical to that of pipe or materials accepted as permissible raw materials by referenced code or standard specification.

Ensure supporting elements exposed to weather are hot-dip galvanized or stainless steel. Select materials of such a nature that their apparent and latent-strength characteristics are not reduced due to galvanizing process. Electroplate supporting elements in contact with copper tubing with copper.

Type designations specified herein are based on MSS SP-58. Ensure masonry anchor group-, type-, and style-combination designations are in accordance with CID A-A-1922, CID A-A-1923, CID A-A-1924, CID A-A-1925 , CID A-A-55614, and CID A-A-55615. Provide support elements, except for supplementary steel, that are cataloged, load rated, commercially manufactured products.

2.5.1 Building Structure Attachments

2.5.1.1 Anchor Devices, Concrete and Masonry

Ensure anchor devices conform to CID A-A-1922, CID A-A-1923, CID A-A-1924, CID A-A-1925 , CID A-A-55614, and CID A-A-55615

For cast-in, floor mounted, equipment anchor devices, provide adjustable positions.

Provide built-in masonry anchor devices.

Do not use powder-actuated anchoring devices to support any mechanical systems components.

2.5.1.2 C-Clamps

Do not use C-clamps.

2.5.1.3 Inserts, Concrete

Use concrete MSS SP-58 Type 18 inserts When applied to piping in sizes 2 inches ips and larger and where otherwise required by imposed loads, insert and wire a 1-foot length of 1/2-inch reinforcing rod through wing slots. Submit proprietary-type continuous inserts for approval.

2.5.2 Horizontal Pipe Attachments

2.5.2.1 Single Pipes

Support piping in sizes to and including 2-inch ips by MSS SP-58 Type 6 solid malleable iron pipe rings, except that, use split-band-type rings in sizes up to 1-inch ips.

Support piping in sizes through 8-inch ips inclusive by MSS SP-58 Type 1 3 and 4 attachments.

Use MSS SP-58 Type 1 and Type 6 assemblies on vapor-sealed insulated piping and have an inside diameter larger than pipe being supported to provide adequate clearance during pipe movement.

Where thermal movement of a point in a piping system 4 inches and larger would cause a hanger rod to deflect more than 4 degrees from the vertical or where a horizontal point movement exceeds 1/2 inch, use MSS SP-58 Type 41 44 through 46 49 pipe rolls.

Use MSS SP-58 Type 40 shields on all insulated piping. Ensure area of the supporting surface is such that compression deformation of insulated surfaces does not occur. Roll away longitudinal and transverse shield edges from the insulation.

Provide insulated piping without vapor barrier on roll supports with MSS SP-58 Type 39 saddles.

Provide spring supports as indicated.

2.5.2.2 Parallel Pipes

Use trapeze hangers fabricated from structural steel shapes, with U-bolts, in congested areas and where multiple pipe runs occur. Ensure structural steel shapes be of commercially available, proprietary design, rolled steel.

2.5.3 Vertical Pipe Attachments

Ensure vertical pipe attachments are MSS SP-58 Type 8.

Include complete fabrication and attachment details of any spring supports in shop drawings.

2.5.4 Hanger Rods and Fixtures

Use only circular cross section rod hangers to connect building structure attachments to pipe support devices. Use pipe, straps, or bars of equivalent strength for hangers only where approved by the Contracting Officer.

Provide turnbuckles, swing eyes, and clevises as required by support system to accommodate temperature change, pipe accessibility, and adjustment for load and pitch. Rod couplings are not acceptable.

PART 3 EXECUTION

3.1 PIPE INSTALLATION

Submit certificates for pipes, valves and specialties showing conformance with test requirements as contained in the reference standards contained in this section. Provide certificates verifying Surface Resistance, Shear and Tensile Strengths, Temperature Ratings, Bending Tests, Flattening Tests and Transverse Guided Weld Bend Tests.

Provide test reports for Hydrostatic Tests, Air Tests, Valve-Operating Tests, Drainage Tests, Pneumatic Tests, Non-Destructive Electric Tests and System Operation Tests, in compliance with referenced standards contained

within this section.

Fabricate and install piping systems in accordance with ASME B31.3, MSS SP-58, and AWS WHB-2.9.

Submit Installation Drawings for pipes, valves and specialties. Drawings include the manufacturer's design and construction calculations, forces required to obtain rated axial, lateral, or angular movements, installation criteria, anchor and guide requirements for equipment, and equipment room layout and design. Ensure drawings specifically advise on procedures to be followed and provisions required to protect expansion joints during specified hydrostatic testing operations.

Ensure connections between steel piping and copper piping are electrically isolated from each other with dielectric couplings (or unions) rated for the service.

Make final connections to equipment with unions provided every 100 feet of straight run. Provide unions in the line downstream of screwed- and welded-end valves.

Ream all pipe ends before joint connections are made.

Make screwed joints with specified joint compound with not more than three threads showing after joint is made up.

Apply joint compounds to the male thread only and exercise care to prevent compound from reaching the unthreaded interior of the pipe.

Provide screwed unions, welded unions, or bolted flanges wherever required to permit convenient removal of equipment, valves, and piping accessories from the piping system for maintenance.

Securely support piping systems with due allowance for thrust forces, thermal expansion and contraction. Do not subject the system to mechanical, chemical, vibrational or other damage as specified in ASME B31.3.

Ensure field welded joints conform to the requirements of the AWS WHB-2.9, ASME B31.3, and ASME BPVC SEC IX.

3.2 VALVES

Provide valves in piping mains and all branches and at equipment where indicated and as specified.

Provide valves to permit isolation of branch piping and each equipment item from the balance of the system.

Provide riser and downcomer drains above piping shutoff valves in piping 2-1/2 inches and larger. Tap and fit shutoff valve body with a 1/2-inch plugged globe valve.

Provide valves unavoidably located in furred or other normally inaccessible places with access panels adequately sized for the location and located so that concealed items may be serviced, maintained, or replaced.

3.3 SUPPORTING ELEMENTS INSTALLATION

Provide supporting elements in accordance with the referenced codes and standards.

Support piping from building structure. Do not support piping from roof deck or from other pipe.

Run piping parallel with the lines of the building. Space and install piping and components so that a threaded pipe fitting may be removed between adjacent pipes and so that there is no less than 1/2 inch of clear space between the finished surface and other work and between the finished surface of parallel adjacent piping. Arrange hangars on different adjacent service lines running parallel with each other in line with each other and parallel to the lines of the building.

Install piping support elements at intervals specified hereinafter, at locations not more than 3 feet from the ends of each runout, and not over 1 foot from each change in direction of piping.

Base load rating for all pipe-hanger supports on insulated weight of lines filled with water and forces imposed. Deflection per span is not exceed slope gradient of pipe. Ensure supports are in accordance with the following minimum rod size and maximum allowable hanger spacing for specified pipe. For concentrated loads such as valves, reduce the allowable span proportionately:

PIPE SIZE INCHES	ROD SIZE INCHES	STEEL PIPE FEET	COPPER PIPE FEET
1 and smaller	3/8	8	6
1-1/4 to 1-1/2	3/8	10	8
2	3/8	10	8
2-1/2 to 3-1/2	1/2	12	12

Provide vibration isolation supports where needed.

Support vertical risers independently of connected horizontal piping, whenever practicable, with fixed or spring supports at the base and at intervals to accommodate system range of thermal conditions. Ensure risers have guides for lateral stability. For risers subject to expansion, provide only one rigid support at a point approximately one-third down from the top. Place clamps under fittings unless otherwise specified. Support carbon-steel pipe at each floor and at not more than 15-foot intervals for pipe 2 inches and smaller and at not more than 20-foot intervals for pipe 2-1/2 inches and larger.

3.4 PENETRATIONS

Provide effective sound stopping and adequate operating clearance to prevent structure contact where piping penetrates walls, floors, or ceilings into occupied spaces adjacent to equipment rooms; where similar penetrations occur between occupied spaces; and where penetrations occur from pipe chases into occupied spaces. Occupied spaces include space

above ceilings where no special acoustic treatment of ceiling is provided. Finish penetrations to be compatible with surface being penetrated.

3.5 SLEEVE

Provide sleeves where piping passes through roofs, masonry, concrete walls and floors.

Continuously weld sleeves passing through steel decks to the deck.

Ensure sleeves that extend through floors, roofs, load bearing walls, and fire barriers are continuous and fabricated from Schedule 40 steel pipe, with welded anchor lugs. Form all other sleeves by molded linear polyethylene liners or similar materials that are removable. Ensure diameter of sleeves is large enough to accommodate pipe, insulation, and jacketing without touching the sleeve and provides a minimum 3/8-inch clearance. Install a sleeve size to accommodate mechanical and thermal motion of pipe precluding transmission of vibration to walls and the generation of noise.

Pack the space between a pipe, bare or insulated, and the inside of a pipe sleeve or a construction surface penetration solid with a mineral fiber conforming to ASTM C553 Type V (flexible blanket), (to 1,000 degrees F). Provide this packing wherever the piping passes through firewalls, equipment room walls, floors, and ceilings connected to occupied spaces, and other locations where sleeves or construction-surface penetrations occur between occupied spaces. Where sleeves or construction surface penetrations occur between conditioned and unconditioned spaces, fill the space between a pipe, bare or insulated, and the inside of a pipe sleeve or construction surface penetration with an elastomer caulk to a depth of 1/2 inch. Ensure all caulked surfaces are oil- and grease-free.

Ensure through-penetration fire stop materials and methods are in accordance with ASTM E814 and UL 1479.

Caulk exterior wall sleeves watertight with lead and oakum or mechanically expandable chloroprene inserts with mastic-sealed metal components.

3.6 ESCUTCHEONS

Provide escutcheons at all penetrations of piping into finished areas. Where finished areas are separated by partitions through which piping passes, provide escutcheons on both sides of the partition. Where suspended ceilings are installed, provide plates at the underside only of such ceilings. For insulated pipes, select plates large enough to fit around the insulation. Use chrome-plated escutcheons in all occupied spaces and of size sufficient to effectively conceal openings in building construction. Firmly attach escutcheons with setscrews.

3.7 FLASHINGS

Provide flashings at penetrations of building boundaries by mechanical systems and related work.

3.8 DISINFECTION

Disinfect water piping, including all valves, fittings, and other devices, with a solution of chlorine and water. Ensure the solution contains not less than 50 parts per million (ppm) of available chlorine. Hold solution

for a period of not less than 8 hours, after which the solution contains not less than 10 ppm of available chlorine or redisinfect the piping. After successful sterilization, thoroughly flush the piping before placing into service. Flushing is complete when the flush water contains less than 0.5 ppm of available chlorine. Water for disinfected will be furnished by the Government. Approve disposal of contaminated flush water in accordance with written instructions received from the Environmental authority having jurisdiction through the Contracting Officer and all local, State and Federal Regulations.

Flush piping with potable water until visible grease, dirt and other contaminants are removed (visual inspection).

3.9 OPERATION AND MAINTENANCE

Provide Operation and Maintenance Manuals consistent with manufacturer's standard brochures, schematics, printed instructions, general operating procedures and safety precautions. Submit test data that is clear and readily legible.

3.10 PAINTING OF NEW EQUIPMENT

Factory or shop apply new equipment painting, as specified herein, and provided under each individual section.

3.10.1 Factory Painting Systems

Manufacturer's standard factory painting systems may be provided subject to certification that the factory painting system applied withstands 125 hours in a salt-spray fog test, except that equipment located outdoors withstand 500 hours in a salt-spray fog test. Conduct salt-spray fog test is in accordance with ASTM B117, and for that test the acceptance criteria is as follows: immediately after completion of the test, the inspected paint shows no signs of blistering, wrinkling, or cracking, and no loss of adhesion; and the specimen shows no signs of rust creepage beyond 0.125 inch on either side of the scratch mark.

Ensure the film thickness of the factory painting system applied on the equipment is not less than the film thickness used on the test specimen. If manufacturer's standard factory painting system is being proposed for use on surfaces subject to temperatures above 120 degrees F, design the factory painting system for the temperature service.

3.10.2 Shop Painting Systems for Metal Surfaces

Clean, pretreat, prime and paint metal surfaces; except aluminum surfaces need not be painted. Apply coatings to clean dry surfaces. Clean the surfaces to remove dust, dirt, rust, oil and grease by wire brushing and solvent degreasing prior to application of paint, except clean to bare metal, surfaces subject to temperatures in excess of 120 degrees F.

Where more than one coat of paint is specified, apply the second coat after the preceding coat is thoroughly dry. Lightly sand damaged painting and retouch before applying the succeeding coat. Selected color of finish coat is aluminum or light gray.

a. Temperatures Less Than 120 Degrees F: Immediately after cleaning, the metal surfaces subject to temperatures less than 120 degrees F receives one coat of pretreatment primer applied to a minimum dry film

thickness of 0.3 mil, one coat of primer applied to a minimum dry film thickness of one mil; and two coats of enamel applied to a minimum dry film thickness of one mil per coat.

-- End of Section --

SECTION 23 05 93

TESTING, ADJUSTING, AND BALANCING FOR HVAC
08/09

PART 1 GENERAL

1.1 REFERENCES

The publications listed below form a part of this specification to the extent referenced. The publications are referred to within the text by the basic designation only.

AIR MOVEMENT AND CONTROL ASSOCIATION INTERNATIONAL (AMCA)

AMCA 203	(1990; R 2011) Field Performance Measurements of Fan Systems

ASSOCIATED AIR BALANCE COUNCIL (AABC)

AABC MN-1	(2002; 6th ed) National Standards for Total System Balance

NATIONAL ENVIRONMENTAL BALANCING BUREAU (NEBB)

NEBB MASV	(2006) Procedural Standards for Measurements and Assessment of Sound and Vibration
NEBB PROCEDURAL STANDARDS	(2005) Procedural Standards for TAB (Testing, Adjusting and Balancing) Environmental Systems

SHEET METAL AND AIR CONDITIONING CONTRACTORS' NATIONAL ASSOCIATION (SMACNA)

SMACNA 1780	(2002) HVAC Systems - Testing, Adjusting and Balancing, 3rd Edition
SMACNA 1858	(2013) HVAC Sound And Vibration Manual - First Edition
SMACNA 1972 CD	(2012) HVAC Air Duct Leakage Test Manual - 2nd Edition

1.2 DEFINITIONS

a. AABC: Associated Air Balance Council.

b. COTR: Contracting Officer's Technical Representative.

c. DALT: Duct air leakage test

d. DALT'd: Duct air leakage tested

e. HVAC: Heating, ventilating, and air conditioning; or heating, ventilating, and cooling.

f. NEBB: National Environmental Balancing Bureau

g. Out-of-tolerance data: Pertains only to field acceptance testing of Final DALT or TAB report. When applied to DALT work, this phase means "a leakage rate measured during DALT field acceptance testing which exceeds the leakage rate allowed by Appendix D REQUIREMENTS FOR DUCT AIR LEAK TESTING." When applied to TAB work this phase means "a measurement taken during TAB field acceptance testing which does not fall within the range of plus 5 to minus 5 percent of the original measurement reported on the TAB Report for a specific parameter."

h. Season of maximum heating load: The time of year when the outdoor temperature at the project site remains within plus or minus 30 degrees Fahrenheit of the project site's winter outdoor design temperature, throughout the period of TAB data recording.

i. Season of maximum cooling load: The time of year when the outdoor temperature at the project site remains within plus or minus 5 degrees Fahrenheit of the project site's summer outdoor design temperature, throughout the period of TAB data recording.

j. Season 1, Season 2: Depending upon when the project HVAC is completed and ready for TAB, Season 1 is defined, thereby defining Season 2. Season 1 could be the season of maximum heating load, or the season of maximum cooling load.

k. Sound measurements terminology: Defined in AABC MN-1, NEBB MASV, or SMACNA 1858 (TABB).

l. TAB: Testing, adjusting, and balancing (of HVAC systems).

m. TAB'd: HVAC Testing/Adjusting/Balancing procedures performed.

n. TAB Agency: TAB Firm

o. TAB team field leader

p. TAB team supervisor

q. TAB team technicians

r. TABB: Testing Adjusting and Balancing Bureau.

1.2.1 Similar Terms

In some instances, terminology differs between the Contract and the TAB Standard primarily because the intent of this Section is to use the industry standards specified, along with additional requirements listed herein to produce optimal results.

The following table of similar terms is provided for clarification only. Contract requirements take precedent over the corresponding AABC, NEBB, or TABB requirements where differences exist.

SIMILAR TERMS			
Contract Term	AABC Term	NEBB Term	TABB Term
TAB Standard	National Standards for Testing and Balancing Heating, Ventilating, and Air Conditioning Systems	Procedural Standards for Testing, Adjusting and Balancing of Environmental Systems	International Standards for Environmental Systems Balance
TAB Specialist	TAB Engineer	TAB Supervisor	TAB Supervisor
Systems Readiness Check	Construction Phase Inspection	Field Readiness Check & Preliminary Field Procedures	Field Readiness Check & Prelim. Field Procedures

1.3 WORK DESCRIPTION

The work includes duct air leakage testing (DALT) and testing, adjusting, and balancing (TAB) of new and existing heating, ventilating, and cooling (HVAC) air and water distribution systems including ducts, and piping which are located within, on, under, between, and adjacent to buildings.

Perform TAB in accordance with the requirements of the TAB procedural standard recommended by the TAB trade association that approved the TAB Firm's qualifications. Comply with requirements of AABC MN-1, NEBB PROCEDURAL STANDARDS, or SMACNA 1780 (TABB) as supplemented and modified by this specification section. All recommendations and suggested practices contained in the TAB procedural standards are considered mandatory.

Conduct DALT and TAB of the indicated existing systems and equipment and submit the specified DALT and TAB reports for approval. Conduct DALT testing in compliance with the requirements specified in SMACNA 1972 CD, except as supplemented and modified by this section. Conduct DALT and TAB work in accordance with the requirements of this section.

1.3.1 Air Distribution Systems

Test, adjust, and balance systems (TAB) in compliance with this section. Obtain Contracting Officer's written approval before applying insulation to exterior of air distribution systems as specified under Section 23 07 00 THERMAL INSULATION FOR MECHANICAL SYSTEMS.

1.3.2 Water Distribution Systems

TAB systems in compliance with this section. Obtain Contracting Officer's written approval before applying insulation to water distribution systems as specified under Section 23 07 00 THERMAL INSULATION FOR MECHANICAL SYSTEMS. At Contractor's option and with Contracting Officer's written approval, the piping systems may be insulated before systems are TAB'd.

Terminate piping insulation immediately adjacent to each flow control valve, automatic control valve, or device. Seal the ends of pipe insulation and the space between ends of pipe insulation and piping, with waterproof vapor barrier coating.

After completion of work under this section, insulate the flow control valves and devices as specified under Section 23 07 00 THERMAL INSULATION FOR MECHANICAL SYSTEMS.

1.3.3 Related Requirements

Requirements for price breakdown of HVAC TAB work are specified in Section 01 20 00.00 20 PRICE AND PAYMENT PROCEDURES.

1.4 SUBMITTALS

Government approval is required for submittals with a "G" designation; submittals not having a "G" designation are for Contractor Quality Control approval. Submit the following in accordance with Section 01 33 00 SUBMITTAL PROCEDURES:

SD-07 Certificates

Independent TAB agency and personnel qualifications

Advance notice of Pre-Final DALT field work

Completed Pre-Final DALT Work Checklist

Advance Notice of TAB Field Work

Completed Pre-TAB Work Checklist

1.5 QUALITY ASSURANCE

1.5.1 Independent TAB Agency and Personnel Qualifications

To secure approval for the proposed agency, submit information certifying that the TAB agency is a first tier subcontractor who is not affiliated with any other company participating in work on this contract, including design, furnishing equipment, or construction. Further, submit the following, for the agency, to Contracting Officer for approval:

a. Independent AABC or NEBB or TABB TAB agency:

TAB agency: AABC registration number and expiration date of current certification; or NEBB certification number and expiration date of current certification; or TABB certification number and expiration date of current certification.

TAB team supervisor: Name and copy of AABC or NEBB or TABB TAB supervisor certificate and expiration date of current certification.

TAB team field leader: Name and documented evidence that the team field leader has satisfactorily performed full-time supervision of TAB work in the field for not less than 3 years immediately preceding this contract's bid opening date.

TAB team field technicians: Names and documented evidence that each field technician has satisfactorily assisted a TAB team field leader in performance of TAB work in the field for not less than one year immediately preceding this contract's bid opening date.

Current certificates: Registrations and certifications are current, and valid for the duration of this contract. Renew Certifications which expire prior to completion of the TAB work, in a timely manner so that there is no lapse in registration or certification. TAB agency or TAB team personnel without a current registration or current certification are not to perform TAB work on this contract.

b. TAB Team Members: TAB team approved to accomplish work on this contract are full-time employees of the TAB agency. No other personnel is allowed to do TAB work on this contract.

c. Replacement of TAB team members: Replacement of members may occur if each new member complies with the applicable personnel qualifications and each is approved by the Contracting Officer.

1.6 PROJECT/SITE CONDITIONS

1.6.1 DALT and TAB Services to Obtain Existing Conditions

Conduct DALT and TAB of the indicated existing systems and equipment and submit the specified DALT and TAB reports for approval. Conduct this DALT and TAB work in accordance with the requirements of this section.

1.7 SEQUENCING AND SCHEDULING

1.7.1 DALT and TAB Submittal and Work Schedule

Comply with additional requirements specified in Appendix C: DALT AND TAB SUBMITTAL AND WORK SCHEDULE included at the end of this section

1.7.2 Projects with Phased Construction

This specification section is structured as though the HVAC construction, and thereby the TAB work, will be completed in a single phase. When the construction is completed in phases, the DALT work and TAB work must be planned, completed, and accepted for each construction phase.

1.7.2.1 Phasing of Work

This specification section is structured as though the HVAC construction, and thereby the TAB work, is going to be completed in a single phase in spite of the fact that there will be two seasons. All elements of the TAB

work are addressed on this premise. When a contract is to be completed in construction phases, including the TAB work, and the DALT work, the TAB work and DALT work must be planned for, completed and approved by the Contracting Officer with each phase. An example of this case would be one contract that requires the rehabilitation of the HVAC in each of several separated buildings. At the completion of the final phase, compile all approved reports and submit as one document.

1.7.3 DALT and TAB Submittal and Work Schedule

Submit this schedule,and TAB Schematic Drawings, adapted for this particular contract, to the Contracting Officer (CO) for review and approval. Include with the submittal the planned calendar dates for each submittal or work item. Resubmit an updated version for CO approval every 90 calendar days days. Compliance with the following schedule is the Contractor's responsibility.

Qualify TAB Personnel: Within 45 calendar days after date of contract award, submit TAB agency and personnel qualifications.

Pre-DALT/TAB Meeting: Within 30 calendar days after the date of approval of the TAB agency and personnel, meet with the COTR.

Design Review Report: Within 60 calendar days after the date of the TAB agency personnel qualifications approval, submit design review report.

Pre-Field DALT Preliminary Notification: On completion of the duct installation for each system, notify the Contracting Officer in writing within 5 days after completion.

Ductwork Selected for DALT: Within 7 calendar days of Pre-Field DALT Preliminary Notification, the COTR will select which of the project ductwork must be DALT'd.

DALT Field Work: Within 48 hours of COTR's selection, complete DALT field work on selected.

Submit Pre-final DALT Report: Within one working day after completion of DALT field work, submit Pre-final DALT Report. Separate Pre-final DALT reports may be submitted to allow phased testing from system to system.

DALT Work Field Check: Upon approval of the Pre-final DALT Report, schedule the COTR's DALT field check work with the Contracting Officer.

Submit Final DALT Report: Within 15 calendar days after completion of successful DALT Work Field Check, submit Season 1 TAB report.

Pre-Field TAB Engineering Report: Within 10 calendar days after approval of the TAB agency Personnel Qualifications, submit the Pre-Field TAB Engineering Report.

Prerequisite HVAC Work Check Out List For Season 1 and Advanced Notice For Season 1 TAB Field Work: At a minimum of 115 calendar days prior to CCD, submit Season 1 prerequisite HVAC work check out list certified as complete, and submit advance notice of commencement of Season 1 TAB field work.

Season 1 TAB Field Work: At a minimum of 90 calendar days prior to CCD, and when the ambient temperature is within Season 1 limits, accomplish

Season 1 TAB field work.

Submit Season 1 TAB Report: Within 15 calendar days after completion of Season 1 TAB field work, submit Season 1 TAB report.

Season 1 TAB Field Check: 30 calendar days after Season 1 TAB report is approved by the Contracting Officer, conduct Season 1 field check.

Complete Season 1 TAB Work: Prior to CCD, complete all TAB work except Season 2 TAB work.

Season 1 TAB Field Work: At a minimum of 90 calendar days prior to CCD, and when the ambient temperature is within Season 1 limits, accomplish Season 1 TAB field work; submit Season 1 TAB report; and conduct Season 1 field check.

Complete Season 1 TAB Work: Prior to CCD, complete all TAB work except Season 2 TAB work.

Prerequisite HVAC Work Check Out List For Season 2 and Advanced Notice For Season 2 TAB Field Work: Within 150 calendar days after date of the commencement of the Season 1 TAB field work, submit the Season 2 prerequisite HVAC work check out list certified as complete and submit advance notice of commencement of Season 2 TAB field work.

Season 2 TAB Field Work: Within 180 calendar days after date of commencement of the Season 1 TAB field work and when the ambient temperature is within Season 2 limits, accomplish Season 2 TAB field work.

Submit Season 2 TAB Report: Within 15 calendar days after completion of Season 2 TAB field work, submit Season 2 TAB report.

Season 2 TAB Field Check: 30 calendar days after the Season 2 TAB report is approved by the Contracting Officer, conduct Season 2 field check.

Complete Season 2 TAB Work: Within 15 calendar days after the completion of Season 2 TAB field data check, complete all TAB work.

Season 2 TAB Field Work: Within 180 calendar days after date of commencement of the Season 1 TAB field work and when the ambient temperature is within Season 2 limits, accomplish Season 2 TAB field work; submit Season 2 TAB report; and conduct Season 2 field check.

Complete Season 2 TAB Work: Within 15 calendar days after the completion of Season 2 field data check, complete TAB work.

1.7.3.1 Design Review Report

Submit typed report describing omissions and deficiencies in the HVAC system's design that would preclude the TAB team from accomplishing the duct leakage testing work and the TAB work requirements of this section. Provide a complete explanation including supporting documentation detailing the design deficiency. State that no deficiencies are evident if that is the case.

1.7.3.2 Pre-Field DALT Preliminary Notification

Notification: On completion of the installation of each duct system

indicated to be DALT'd, notify the Contracting Officer in writing within 7 calendar days after completion.

1.7.3.3 Pre-Field TAB Engineering Report

Submit report containing the following information:

a. Step-by-step TAB procedure:

(1) Strategy: Describe the method of approach to the TAB field work from start to finish. Include in this description a complete methodology for accomplishing each seasonal TAB field work session.

(2) Air System Diagrams: Use the contract drawings and duct fabrication drawings if available to provide air system diagrams in the report showing the location of all terminal outlet supply, return, exhaust and transfer registers, grilles and diffusers. Use a key numbering system on the diagrams which identifies each outlet contained in the outlet airflow report sheets. Show intended locations of all traverses and static pressure readings.

(3) Procedural steps: Delineate fully the intended procedural steps to be taken by the TAB field team to accomplish the required TAB work of each air distribution system and each water distribution system. Include intended procedural steps for TAB work for subsystems and system components.

b. Pre-field data: Submit AABC or NEBB or SMACNA 1780 data report forms with the following pre-field information filled in:

(1) Design data obtained from system drawings, specifications, and approved submittals.

(2) Notations detailing additional data to be obtained from the contract site by the TAB field team.

(3) Designate the actual data to be measured in the TAB field work.

(4) Provide a list of the types of instruments, and the measuring range of each, which are anticipated to be used for measuring in the TAB field work. By means of a keying scheme, specify on each TAB data report form submitted, which instruments will be used for measuring each item of TAB data. If the selection of which instrument to use, is to be made in the field, specify from which instruments the choice will be made. Place the instrument key number in the blank space where the measured data would be entered.

c. Prerequisite HVAC work checkout list: Provide a list of inspections and work items which are to be completed by the Contractor. This list must be acted upon and completed by the Contractor and then submitted and approved by the Contracting Officer prior to the TAB team coming to the contract site.

At a minimum, a list of the applicable inspections and work items listed in the NEBB PROCEDURAL STANDARDS, Section III, "Preliminary TAB Procedures" under paragraphs titled, "Air Distribution System Inspection" and "Hydronic Distribution System Inspection" must be provided for each separate system to be TAB'd.

1.8 SUBCONTRACTOR SPECIAL REQUIREMENTS

Perform all work in this section in accordance with the paragraph entitled "Subcontractor Special Requirements" in Section 01 30 00 ADMINISTRATIVE REQUIREMENTS, stating that all contract requirements of this section must be accomplished directly by a first tier subcontractor. No work may be performed by a second tier subcontractor.

PART 2 PRODUCTS

Not Used

PART 3 EXECUTION

3.1 WORK DESCRIPTIONS OF PARTICIPANTS

Comply with requirements of this section as specified in Appendix A WORK DESCRIPTIONS OF PARTICIPANTS.

3.2 PRE-DALT/TAB MEETING

Meet with the Contracting Officer's technical representative (COTR) to develop a mutual understanding relative to the details of the DALT work and TAB work requirements. Ensure that the TAB supervisor is present at this meeting. Requirements to be discussed include required submittals, work schedule, and field quality control.

3.3 DALT PROCEDURES

3.3.1 Instruments, Consumables and Personnel

Provide instruments, consumables and personnel required to accomplish the DALT field work. Follow the same basic procedure specified below for TAB Field Work, including maintenance and calibration of instruments, accuracy of measurements, preliminary procedures, field work, workmanship and treatment of deficiencies. Calibrate and maintain instruments in accordance with manufacturer's written procedures.

3.3.2 Advance Notice of Pre-Final DALT Field Work

On completion of the installation of each duct system indicated to be DALT'd, notify the Contracting Officer in writing prior to the COTR's duct selection field visit.

3.3.3 Ductwork To Be DALT'd

From each duct system indicated as subject to DALT, the COTR will randomly select sections of each completed duct system for testing by the Contractor's TAB Firm. The sections selected will not exceed 20 percent of the total measured linear footage of duct systems indicated as subject to DALT. Sections of duct systems subject to DALT will include 20 percent of main ducts, branch main ducts, branch ducts and plenums for supply, return, exhaust, and plenum ductwork.

It is acceptable for an entire duct system to be DALT'd instead of disassembling that system in order to DALT only the 20 percent portion specified above.

3.3.4 DALT Testing

Perform DALT on the HVAC duct sections of each system as selected by the COTR. Use the duct class, seal class, leakage class and the leak test pressure data indicated on the drawings, to comply with the procedures specified in SMACNA 1972 CD.

In spite of specifications of SMACNA 1972 CD to the contrary, DALT ductwork of construction class of 3-inch water gauge static pressure and below if indicated to be DALT'd. Complete DALT work on the COTR selected ductwork within 48 hours after the particular ductwork was selected for DALT. Separately conduct DALT work for large duct systems to enable the DALT work to be completed in 48 hours.

3.3.5 Pre-final DALT Report

After completion of the DALT work, prepare a Pre-final DALT Report meeting the additional requirements specified in Appendix B REPORTS - DALT and TAB. Data required by those data report forms shall be furnished by the TAB team. Prepare the report neatly and legibly; the Pre-final DALT report shall provide the basis for the Final DALT Report.

TAB supervisor shall review, approve and sign the Pre-Final DALT Report and submit this report within one day of completion of DALT field work. Verbally notify the COTR that the field check of the Pre-Final DALT Report data can commence.

3.3.6 Quality Assurance - COTR DALT Field Acceptance Testing

In the presence of the COTR and TAB team field leader, verify for accuracy Pre-final DALT Report data selected by the COTR. For each duct system, this acceptance testing shall be conducted on a maximum of 50 percent of the duct sections DALT'd.

Further, if any data on the Pre-final DALT report form for a given duct section is out-of-tolerance, then field acceptance testing shall be conducted on data for one additional duct section, preferably in the same duct system, in the presence of the COTR.

3.3.7 Additional COTR Field Acceptance Testing

If any of the duct sections checked for a given system are determined to have a leakage rate measured that exceeds the leakage rate allowed by SMACNA Leak Test Manual for an indicated duct construction class and sealant class, terminate data checking for that section. The associated Pre-final DALT Report data for the given duct system will be disapproved. Make the necessary corrections and prepare a revised Pre-final DALT Report. Reschedule a field check of the revised report data with the COTR.

3.3.8 Certified Final DALT Report

On successful completion of all field checks of the Pre-Final DALT Report data for all systems, the TAB Supervisor shall assemble, review, approve, sign and submit the Final DALT Report in compliance with Appendix B REPORTS - DALT and TAB to the Contracting Officer for approval.

3.3.9 Prerequisite for TAB Field Work

Do not commence TAB field work prior to the completion and approval, for

all systems, of the Final DALT Report.

3.4 TAB PROCEDURES

3.4.1 TAB Field Work

Test, adjust, and balance the HVAC systems until measured flow rates (air and water flow) are within plus or minus 5 percent of the design flow rates as specified or indicated on the contract documents.

That is, comply with the the requirements of AABC MN-1 , or SMACNA 1780 (TABB) and SMACNA 1858 (TABB),except as supplemented and modified by this section.

Provide instruments and consumables required to accomplish the TAB work. Calibrate and maintain instruments in accordance with manufacturer's written procedures.

Test, adjust, and balance the HVAC systems until measured flow rates (air and water flow) are within plus or minus 5 percent of the design flow rates as specified or indicated on the contract documents. Conduct TAB work, including measurement accuracy, and sound measurement work in conformance with the AABC MN-1 and AABC MN-4, or NEBB TABES and NEBB MASV, or SMACNA 1780 (used by TABB) and SMACNA 1858 sound measurement procedures, except as supplemented and modified by this section. The only water flow and air flow reporting which can be deferred until the Season 2 is that data which would be affected in terms of accuracy due to outside ambient conditions.

3.4.2 Preliminary Procedures

Use the approved pre-field engineering report as instructions and procedures for accomplishing TAB field work. TAB engineer is to locate, in the field, test ports required for testing. It is the responsibility of the sheet metal contractor to provide and install test ports as required by the TAB engineer.

3.4.3 TAB Air Distribution Systems

3.4.3.1 Air Handling Units

Air handling unit systems including fans (air handling unit fans, exhaust fans and winter ventilation fans), coils, ducts, plenums, mixing boxes, terminal units, variable air volume boxes, and air distribution devices for supply air, return air, outside air, mixed air relief air, and makeup air.

3.4.3.2 Fan Coils

Fan coil unit systems including fans, coils, ducts, plenums, and air distribution devices for supply air, return air, and outside air.

3.4.3.3 Exhaust Fans

Exhaust fan systems including fans, ducts, plenums, grilles, and hoods for exhaust air.

3.4.4 TAB Water Distribution Systems

3.4.4.1 Heating Hot Water

Heating hot water systems including boilers, hot water converters (e.g., heat exchangers), pumps, coils, system balancing valves and flow measuring devices.

3.4.5 TAB Work on Performance Tests Without Seasonal Limitations

3.4.5.1 Performance Tests

In addition to the TAB proportionate balancing work on the air distribution systems and the water distribution systems, accomplish TAB work on the HVAC systems which directly transfer thermal energy. TAB the operational performance of the cooling systems.

3.4.5.2 Ambient Temperatures

On each tab report form used for recording data, record the outdoor and indoor ambient dry bulb temperature range and the outdoor and indoor ambient wet bulb temperature range within which the report form's data was recorded. Record these temperatures at beginning and at the end of data taking.

3.4.5.3 Sound Measurements

Comply with paragraph entitled "Sound Measurement Work," specifically, the requirement that a room must be operating in its noisiest mode at the time of sound measurements in the room. The maximum noise level measurements could depend on seasonally related heat or cooling transfer equipment.

3.4.6 TAB Work on Performance Tests With Seasonal Limitations

3.4.6.1 Performance Tests

Accomplish proportionate balancing TAB work on the air distribution systems and water distribution systems, in other words, accomplish adjusting and balancing of the air flows and water flows, any time during the duration of this contract, subject to the limitations specified elsewhere in this section. However, accomplish, within the following seasonal limitations, TAB work on HVAC systems which directly transfer thermal energy.

3.4.6.2 Season Of Maximum Load

Visit the contract site for at least two TAB work sessions for TAB field measurements. visit the contract site during the season of maximum cooling load, the goal being to TAB the operational performance of the cooling systems under their respective maximum outdoor environment-caused loading. During the seasonal limitations, TAB the operational performance of the cooling systems.

3.4.6.3 Ambient Temperatures

On each tab report form used for recording data, record the outdoor and indoor ambient dry bulb temperature range and the outdoor and indoor ambient wet bulb temperature range within which the report form's data was recorded. Record these temperatures at beginning and at the end of data

taking.

3.4.6.4 Sound Measurements

Comply with paragraph entitled "Sound Measurement Work," specifically, the requirement that a room must be operating in its noisiest mode at the time of sound measurements in the room. The maximum noise level measurements could depend on seasonally related heat or cooling transfer equipment.

3.4.7 Workmanship

Conduct TAB work on the HVAC systems until measured flow rates are within plus or minus 5 percent of the design flow rates as specified or indicated on the contract documents. This TAB work includes adjustment of balancing valves, balancing dampers, and sheaves. Further, this TAB work includes changing out fan sheaves and pump impellers if required to obtain air and water flow rates specified or indicated. If, with these adjustments and equipment changes, the specified or indicated design flow rates cannot be attained, contact the Contracting Officer for direction.

3.4.8 Deficiencies

Strive to meet the intent of this section to maximize the performance of the equipment as designed and installed. However, if deficiencies in equipment design or installation prevent TAB work from being accomplished within the range of design values specified in the paragraph entitled "Workmanship," provide written notice as soon as possible to the Contractor and the Contracting Officer describing the deficiency and recommended correction.

Responsibility for correction of installation deficiencies is the Contractor's. If a deficiency is in equipment design, call the TAB team supervisor for technical assistance. Responsibility for reporting design deficiencies to Contractor is the TAB team supervisor's.

3.4.9 TAB Reports

Additional requirements for TAB Reports are specified in Appendix B REPORTS - DALT and TAB

3.4.10 Quality Assurance - COTR TAB Field Acceptance Testing

3.4.10.1 TAB Field Acceptance Testing

During the field acceptance testing, verify, in the presence of the COTR, random selections of data (water, air quantities, air motion,) recorded in the TAB Report. Points and areas for field acceptance testing are to be selected by the COTR. Measurement and test procedures are the same as approved for TAB work for the TAB Report.

Field acceptance testing includes verification of TAB Report data recorded for the following equipment groups:

Group 1: All chillers, boilers, return fans, computer room units, and air handling units (rooftop and central stations).

Group 2: 25 percent of the VAV terminal boxes and associated diffusers and registers.

Group 3: 25 percent of the supply diffusers, registers, grilles associated with constant volume air handling units.

Group 4: 25 percent of the return grilles, return registers, exhaust grilles and exhaust registers.

Group 5: 25 percent of the supply fans, exhaust fans, and pumps.

Further, if any data on the TAB Report for Groups 2 through 5 is found not to fall within the range of plus 5 to minus 5 percent of the TAB Report data, additional group data verification is required in the presence of the COTR. Verify TAB Report data for one additional piece of equipment in that group. Continue this additional group data verification until out-of-tolerance data ceases to be found.

3.4.10.2 Additional COTR TAB Field Acceptance Testing

If any of the acceptance testing measurements for a given equipment group is found not to fall within the range of plus 5 to minus 5 percent of the TAB Report data, terminate data verification for all affected data for that group. The affected data for the given group will be disapproved. Make the necessary corrections and prepare a revised TAB Report. Reschedule acceptance testing of the revised report data with the COTR.

3.4.10.3 Prerequisite for Approval

Compliance with the field acceptance testing requirements of this section is a prerequisite for the final Contracting Officer approval of the TAB Report submitted.

3.5 MARKING OF SETTINGS

Upon the final TAB work approval, permanently mark the settings of HVAC adjustment devices including valves, gauges, splitters, and dampers so that adjustment can be restored if disturbed at any time. Provide permanent markings clearly indicating the settings on the adjustment devices which result in the data reported on the submitted TAB report.

3.6 MARKING OF TEST PORTS

The TAB team is to permanently and legibly mark and identify the location points of the duct test ports. If the ducts have exterior insulation, make these markings on the exterior side of the duct insulation. Show the location of test ports on the as-built mechanical drawings with dimensions given where the test port is covered by exterior insulation.

3.7 APPENDICES

Appendix A WORK DESCRIPTIONS OF PARTICIPANTS
Appendix B REPORTS - DALT and TAB
Appendix C DALT AND TAB SUBMITTAL AND WORK SCHEDULE
Appendix D REQUIREMENTS FOR DUCT AIR LEAK TESTING

Appendix A

WORK DESCRIPTIONS OF PARTICIPANTS

The Contractor is responsible for ensuring compliance with all requirements of this specification section. However, the following delineation of specific work items is provided to facilitate and co-ordinate execution of the various work efforts by personnel from separate organizations.

1. Contractor

a. HVAC documentation: Provide pertinent contract documentation to the TAB Firm, to include the following: the contract drawings and specifications; copies of the approved submittal data for all HVAC equipment, air distribution devices, and air/water measuring/balancing devices; the construction work schedule; and other applicable documents requested by the TAB Firm. Provide the TAB Firm copies of contract revisions and modifications as they occur.

b. Schedules: Ensure the requirements specified under the paragraph "DALT and TAB Schedule" are met.

c. Pre-DALT and TAB meeting: Arrange and conduct the Pre-DALT and TAB meeting. Ensure that a representative is present for the sheet metal contractor, the mechanical contractor, the electrical contractor, and the automatic temperature controls contractor.

d. Coordinate Support: Provide and coordinate support personnel required by the TAB Firm in order to accomplish the DALT and TAB field work. Support personnel may include factory representatives, HVAC controls installers, HVAC equipment mechanics, sheet metal workers, pipe fitters, and insulators. Ensure support personnel are present at the work site at the times required.

e. Correct Deficiencies: Ensure the notifications of Construction Deficiencies are provided as specified herein. Refer to the paragraph entitled "Construction Deficiencies." Correct each deficiency as soon as practical with the Contracting Officer, and submit revised schedules and other required documentation.

f. Pre-TAB Work Checklists: Complete check out and debugging of HVAC equipment, ducts, and controls prior to the TAB engineer arriving at the project site to begin the TAB work. Debugging includes searching for and eliminating malfunctioning elements in the HVAC system installations, and verifying all adjustable devices are functioning as designed. Include as pre-TAB work checklist items, the deficiencies pointed out by the TAB team supervisor in the design review report.

Prior to the TAB field team's arrival, ensure completion of the applicable inspections and work items listed in the TAB team supervisor's DALT and TAB Work Procedures Summary. Do not allow the TAB team to commence TAB field work until all of the following are completed.

g. Give Notice of Testing: Submit advance notice of TAB field work accompanied by completed prerequisite HVAC Work List

h. Insulation work: Ensure that no insulation is shall not be installed

on ducts to be DALT'd until DALT work on the subject ducts is complete.

Ensure the duct and piping systems are properly insulated and vapor sealed upon the successful completion and acceptance of the DALT and TAB work.

2. TAB Team Supervisor

a. Overall management: Supervise and manage the overall TAB team work effort, including preliminary and technical DALT and TAB procedures and TAB team field work.

b. Schedule: Ensure the requirements specified under the paragraph "DALT and TAB Schedule" are met.

c. Submittals: Provide the submittals specified herein.

d. Pre-DALT/TAB meeting: Attend meeting with Contractor. Ensure TAB personnel that will be involved in the TAB work under this contract attend the meeting.

e. Design Review Report: Submit typed report describing omissions and deficiencies in the HVAC system's design that would preclude the TAB team from accomplishing the duct leakage testing work and the TAB work requirements of this section. Provide a complete explanation including supporting documentation detailing the design deficiency. State that no deficiencies are evident if that is the case.

f. Support required: Specify the technical support personnel required from the Contractor other than the TAB agency; such as factory representatives for temperature controls or for complex equipment. Inform the Contractor in writing of the support personnel needed and when they are needed. Furnish the notice as soon as the need is anticipated, either with the design review report, or the DALT and TAB Procedures Summary, the during the DALT or TAB field work.

Ensure the Contractor is properly notified and aware of all support personnel needed to perform the TAB work. Maintain communication with the Contractor regarding support personnel throughout the duration of the TAB field work, including the TAB field acceptance testing checking.

Ensure all inspections and verifications for the Pre-Final DALT and Pre-TAB Checklists are completely and successfully conducted before DALT and TAB field work is performed.

g. Advance Notice: Monitor the completion of the duct system installations and provide the Advance Notice for Pre-Final DALT field work as specified herein.

h. Technical Assistance: Provide technical assistance to the DALT and TAB field work.

i. Deficiencies Notification: Ensure the notifications of Construction Deficiencies are provided as specified herein. Comply with requirements of the paragraph entitled "Construction Deficiencies." Resolve each deficiency as soon as practical and submit revised schedules and other required documentation.

j. Procedures: Develop the required TAB procedures for systems or system components not covered in the TAB Standard.

3. TAB Team Field Leader

a. Field manager: Manage, in the field, the accomplishment of the work specified in Part 3, "Execution."

b. Full time: Be present at the contract site when DALT field work or TAB field work is being performed by the TAB team; ensure day-to-day TAB team work accomplishments are in compliance with this section.

c. Prerequisite HVAC work: Do not bring the TAB team to the contract site until a copy of the prerequisite HVAC work list, with all work items certified by the Contractor to be working as designed, reaches the office of the TAB Agency.

Appendix B

REPORTS - DALT and TAB

All submitted documentation must be typed, neat, and organized. All reports must have a waterproof front and back cover, a title page, a certification page, sequentially numbered pages throughout, and a table of contents. Tables, lists, and diagrams must be titled. Generate and submit for approval the following documentation:

1. DALT and TAB Work Execution Schedule

Submit a detailed schedule indicating the anticipated calendar date for each submittal and each portion of work required under this section. For each work entry, indicate the support personnel (such as controls provider, HVAC mechanic, etc.) that are needed to accomplish the work. Arrange schedule entries chronologically.

2. DALT and TAB Procedures Summary

Submit a detailed narrative describing all aspects of the DALT and TAB field work to be performed. Clearly distinguish between DALT information and TAB information. Include the following:

a. A list of the intended procedural steps for the DALT and TAB field work from start to finish. Indicate how each type of data measurement will be obtained. Include what Contractor support personnel are required for each step, and the tasks they need to perform.

b. A list of the project's submittals that are needed by the TAB Firm in order to meet this Contract's requirements.

c. The schematic drawings to be used in the required reports, which may include building floor plans, mechanical room plans, duct system plans, and equipment elevations. Indicate intended TAB measurement locations, including where test ports need to be provided by the Contractor.

d. The data presentation forms to be used in the report, with the preliminary information and initial design values filled in.

e. A list of DALT and TAB instruments to be used, edited for this project, to include the instrument name and description, manufacturer, model number, scale range, published accuracy, most recent calibration date, and what the instrument will be used for on this project.

f. A thorough checklist of the work items and inspections that need to be accomplished before DALT field work can be performed. The Contractor must complete, submit, and receive approval of the Completed Pre-Final DALT Work Checklist before DALT field work can be accomplished.

g. A thorough checklist of the work items and inspections that need to be accomplished before the Season 1 TAB field work can be performed. The Contractor must complete, submit, and receive approval of the Completed Season 1 Pre-TAB Work Checklist before the Season 1 TAB field work can be accomplished.

i. The checklists specified above shall be individually developed and tailored specifically for the work under this contract. Refer to NEBB PROCEDURAL STANDARDS, Section III, "Preliminary TAB Procedures" under the paragraphs titled, "Air Distribution System Inspection" and "Hydronic Distribution System Inspection" for examples of items to include in the checklists.

3. Design Review Report

Submit report containing the following information:

a. Review the contract specifications and drawings to verify that the TAB work can be successfully accomplished in compliance with the requirements of this section. Verify the presence and location of permanently installed test ports and other devices needed, including gauge cocks, thermometer wells, flow control devices, circuit setters, balancing valves, and manual volume dampers.

b. Submit a typed report describing omissions and deficiencies in the HVAC system's design that would preclude the TAB team from accomplishing the DALT work and the TAB work requirements of this section. Provide a complete explanation including supporting documentation detailing the design deficiency. If no deficiencies are evident, state so in the report.

4. Pre-Final DALT Report for COTR DALT Field Checks

Report the data for the Pre-Final DALT Report meeting the following requirements:

a. Submit a copy of the approved DALT and TAB Procedures Summary: Provide notations describing how actual field procedures differed from the procedures listed.

b. Report format: Submit a comprehensive report for the DALT field work data using data presentation forms equivalent to the "Air Duct Leakage Test Summary Report Forms" located in the SMACNA 1972 CD. In addition, submit in the report, a marked duct shop drawing which identifies each section of duct tested with assigned node numbers for each section. Node numbers shall be included in the completed report forms to identify each duct section.

c. Calculations: Include a copy of all calculations prepared in determining the duct surface area of each duct test section. Include in the DALT reports copy(s) of the calibration curve for each of the DALT test orifices used for testing.

d. Instruments: List the types of instruments actually used to measure the data. Include in the listing each instrument's unique identification number, calibration date, and calibration expiration date. Instruments are to be calibrated within one year of the date of use in the field; instrument calibration is to be traceable to the measuring standards of the National Institute of Standards and Technology.

e. TAB Supervisor Approval: Include on the submitted report the typed name of the TAB supervisor and the dated signature of the TAB supervisor.

5. Final DALT Report

On successful completion of all COTR field checks of the Pre-final DALT Report data for all systems, the TABS Supervisor shall assemble, review, sign and submit the Final DALT Report to the Contracting Officer for approval.

6. TAB Reports: Submit TAB Report for Season 1 and TAB Report for Season 2 in the following manner:

a. Procedure Summary: Submit a copy of the approved DALT and TAB Procedures Summary. When applicable, provide notations describing how actual field procedures differed from the procedures listed.

b. Report format: Submit the completed data forms approved in the pre-field TAB Engineering Report completed by TAB field team, reviewed, approved and signed by the TAB supervisor. Bind the report with a waterproof front and back cover. Include a table of contents identifying by page number the location of each report. Report forms and report data shall be typewritten. Handwritten report forms or report data are not acceptable.

c. Temperatures: On each TAB report form reporting TAB work accomplished on HVAC thermal energy transfer equipment, include the indoor and outdoor dry bulb temperature range and indoor and outdoor wet bulb temperature range within which the TAB data was recorded. Include in the TAB report continuous time versus temperature recording data of wet and dry bulb temperatures for the rooms, or zones, as designated in the following list:

(1) Data shall be measured and compiled on a continuous basis for the period in which TAB work affecting those rooms is being done.

(2) Data shall be measured/recorded only after the HVAC systems installations are complete, the systems fully balanced and the HVAC systems controls operating in fully automatic mode. Provide a detailed explanation wherever a final measurement did not achieve the required value.

(3) Data may be compiled using direct digital controls trend logging where available. Otherwise, the Contractor shall temporarily install calibrated time versus temperature/humidity recorders for this purpose. The HVAC systems and controls shall have been fully operational a minimum of 24 hours in advance of commencing data compilation. The specified data shall be included in the TAB Report.

d. Air System Diagrams: Provided updated diagrams with final installed locations of all terminals and devices, any numbering changes, and actual test locations.

e. Air Static Pressure Profiles: Report static pressure profiles for air duct systems including: AHU-1RTAC-1MUA-1__etc___. Report static pressure data for all supply, return, relief, exhaust and outside air ducts for the systems listed. The static pressure report data shall include, in addition to AABC or NEBB or TABB required data, the following:

(1) Report supply fan, return fan, relief fan, and exhaust fan inlet and discharge static pressures.

(2) Report static pressure drop across chilled water coils, DX coils, hot water coils, steam coils, electric resistance heating coils and heat reclaim devices installed in unit cabinetry or the system ductwork.

(3) Report static pressure drop across outside air, return air, and supply air automatic control dampers, both proportional and two-position, installed in unit cabinetry.

(4) Report static pressure drop across air filters, acoustic silencers, moisture eliminators, air flow straighteners, air flow measuring stations or other pressure drop producing specialty items installed in unit cabinetry, or in the system ductwork. Examples of these specialty items are smoke detectors, white sound generators, RF shielding, wave guides, security bars, blast valves, small pipes passing through ductwork, and duct mounted humidifiers.

Do not report static pressure drop across duct fittings provided for the sole purpose of conveying air, such as elbows, transitions, offsets, plenums, manual dampers, and branch takes-offs.

(5) Report static pressure drop across outside air and relief/exhaust air louvers.

(6) Report static pressure readings of supply air, return air, exhaust/relief air, and outside air in duct at the point where these ducts connect to each air moving unit.

f. Duct Transverses: Report duct traverses for main and branch main supply, return, exhaust, relief and outside air ducts. The TAB Agency shall evaluate and report findings on the duct traverses taken. Evaluate the suitability of the duct traverse measurement based on satisfying the qualifications for a pitot traverse plane as defined by AMCA 203, "Field Measurements", Section 8, paragraph 8.3, "Location of Traverse Plane".

g. Instruments: List the types of instruments actually used to measure the tab data. Include in the listing each instrument's unique identification number, calibration date, and calibration expiration date.

Instrumentation, used for taking wet bulb temperature readings shall provide accuracy of plus or minus 5 percent at the measured face velocities. Submit instrument manufacturer's literature to document instrument accuracy performance is in compliance with that specified.

h. Performance Curves: The TAB Supervisor shall include, in the TAB Reports, factory pump curves and fan curves for pumps and fans TAB'd on the job.

i. Calibration Curves: The TAB Supervisor shall include, in the TAB Reports, a factory calibration curve for installed flow control balancing valves, flow venturis and flow orifices TAB'd on the job.

j. Data From TAB Field Work: After completion of the TAB field work,

prepare the TAB field data for TAB supervisor's review and approval signature, using the reporting forms approved in the pre-field engineering report. Data required by those approved data report forms shall be furnished by the TAB team. Except as approved otherwise in writing by the Contracting Officer, the TAB work and thereby the TAB report shall be considered incomplete until the TAB work is accomplished to within the accuracy range specified in the paragraph entitled "Workmanship."

Appendix C

DALT AND TAB SUBMITTAL AND WORK SCHEDULE

Perform the following items of work in the order listed adhering to the dates schedule specified below. Include the major items listed in this schedule in the project network analysis schedule required by Section 01 32 17.00 20 NETWORK ANALYSIS SCHEDULES (NAS).

Submit TAB Agency and TAB Personnel Qualifications: Within 42 calendar days after date of contract award.

Submit the DALT and TAB Work Execution Schedule: within 14 days after receipt of the TAB agency and TAB personnel qualifications approval. Revise and re-submit this schedule 28 days prior to commencement of DALT work and 28 days prior to the commencement of TAB Season 1 work and TAB Season 2 work.

Submit the DALT and TAB Work Procedures Summary: within 14 days after receipt of the initial approved DALT and TAB Work Execution Schedule.

Meet with the COTR at the Pre-DALT/TAB Meeting: Within 28 calendar days after receipt of the approved initial DALT/TAB Execution Schedule.

Submit Design Review Report: Within 56 calendar days after the receipt of the approved initial DALT and TAB Work Execution Schedule.

Conduct measurements and submit the Record of Existing Facility Conditions: within 28 days after receipt of approved DALT and TAB Work Procedures Summary.

Advance Notice of Pre-Final DALT Field Work: After the completed installation of the HVAC duct system to be DALT'd, submit to the Contracting Officer an Advance Notice of Pre-Final DALT Field Work accompanied by the completed Pre-Final DALT Work Checklistchecklist for the subject duct system.

Ductwork Selected for DALT: Within 14 calendar days after receiving an acceptable completed Pre-Final DALT Work Checklist, the Contracting Officer's technical representative (COTR) will select the project ductwork sections to be DALT'd.

DALT Field Work: Within 48 hours of COTR's selection, complete DALT field work on selected project ductwork.

Submit Pre-Final DALT Report: Within two working days after completion of DALT field work, submit Pre-final DALT Report. Separate Pre-final DALT reports may be submitted to allow phased testing from system to system.

Quality Assurance - COTR DALT Field Checks: Upon approval of the Pre-final DALT Report, the COTR's DALT field check work shall be scheduled with the Contracting Officer.

Submit Final DALT Report: Within 14 calendar days after completion of successful DALT Work Field Check, submit TAB report.

Advance Notice of TAB Field Work: At a minimum of 14 calendar days prior to TAB Field Work, submit advance notice of TAB field work accompanied

by completed
Pre-TAB Work Checklist.

TAB Field Work: At a minimum of 84 calendar days prior to CCD, accomplish TAB field work.

Submit TAB Report: Within 14 calendar days after completion of TAB field work, submit initial TAB report.

Quality Assurance - COTR TAB Field Check: 30 calendar days after initial TAB report is approved by the Contracting Officer, conduct field check.

Complete TAB Work: Prior to CCD, complete all TAB work and submit final.

Receive the approved TAB report: Within 21 calendar days, receive the report from Contracting Officer approved TAB report.

Advance Notice of Season 2 TAB Field Work: At a minimum of 126 calendar days after CCD, submit advance notice of Season 2 TAB field work accompanied by completed Season 2 Pre-TAB Work Checklist.

Receive the approved TAB report: Within calendar 21 days, receive the report from Contracting Officer.

Appendix D			
REQUIREMENTS FOR DUCT AIR LEAK TESTING			
		SYSTEMS	
		Package Rooftop w/VAV Unit	Package Rooftop w/CV Unit
Duct System Static Pressure, in inches W.C.	for Supply	4	2
	for Return	2	1
	for Exhaust	2	1
	for Outside Air	2	1

Appendix D			
REQUIREMENTS FOR DUCT AIR LEAK TESTING			
		SYSTEMS	
		Package Rooftop w/VAV Unit	Package Rooftop w/CV Unit
System Rectangular Duct SMACNA Leak Class	for Supply	6	12
	for Return	12	24
	for Exhaust	12	24
	for Outside Air	12	24
Duct Test Pressure, in inches W.C.	for Supply	4	50
	for Return	2	1
	for Exhaust	2	1
	for Outside Air	2	1

-- End of Section --

SECTION 23 07 00

THERMAL INSULATION FOR MECHANICAL SYSTEMS
02/13

PART 1 GENERAL

1.1 REFERENCES

The publications listed below form a part of this specification to the extent referenced. The publications are referred to within the text by the basic designation only. At the discretion of the Government, the manufacturer of any material supplied will be required to furnish test reports pertaining to any of the tests necessary to assure compliance with the standard or standards referenced in this specification.

AMERICAN SOCIETY OF HEATING, REFRIGERATING AND AIR-CONDITIONING ENGINEERS (ASHRAE)

ASHRAE 90.1 - IP	(2010; ERTA 2011-2013) Energy Standard for Buildings Except Low-Rise Residential Buildings

ASTM INTERNATIONAL (ASTM)

ASTM A167	(1999; R 2009) Standard Specification for Stainless and Heat-Resisting Chromium-Nickel Steel Plate, Sheet, and Strip
ASTM A240/A240M	(2014) Standard Specification for Chromium and Chromium-Nickel Stainless Steel Plate, Sheet, and Strip for Pressure Vessels and for General Applications
ASTM A580/A580M	(2013b) Standard Specification for Stainless Steel Wire
ASTM B209	(2010) Standard Specification for Aluminum and Aluminum-Alloy Sheet and Plate
ASTM C1126	(2014) Standard Specification for Faced or Unfaced Rigid Cellular Phenolic Thermal Insulation
ASTM C1136	(2012) Standard Specification for Flexible, Low Permeance Vapor Retarders for Thermal Insulation
ASTM C1290	(2011) Standard Specification for Flexible Fibrous Glass Blanket Insulation Used to Externally Insulate HVAC Ducts
ASTM C1710	(2011) Standard Guide for Installation of Flexible Closed Cell Preformed Insulation in Tube and Sheet Form

ASTM C195	(2007; R 2013) Standard Specification for Mineral Fiber Thermal Insulating Cement
ASTM C450	(2008) Standard Practice for Fabrication of Thermal Insulating Fitting Covers for NPS Piping, and Vessel Lagging
ASTM C533	(2013) Standard Specification for Calcium Silicate Block and Pipe Thermal Insulation
ASTM C534/C534M	(2014) Standard Specification for Preformed Flexible Elastomeric Cellular Thermal Insulation in Sheet and Tubular Form
ASTM C547	(2012) Standard Specification for Mineral Fiber Pipe Insulation
ASTM C552	(2013) Standard Specification for Cellular Glass Thermal Insulation
ASTM C585	(2010) Standard Practice for Inner and Outer Diameters of Thermal Insulation for Nominal Sizes of Pipe and Tubing
ASTM C610	(2011) Standard Specification for Molded Expanded Perlite Block and Pipe Thermal Insulation
ASTM C612	(2014) Mineral Fiber Block and Board Thermal Insulation
ASTM C647	(2008; R 2013) Properties and Tests of Mastics and Coating Finishes for Thermal Insulation
ASTM C795	(2008; R 2013) Standard Specification for Thermal Insulation for Use in Contact with Austenitic Stainless Steel
ASTM C916	(1985; R 2007) Standard Specification for Adhesives for Duct Thermal Insulation
ASTM C920	(2014a) Standard Specification for Elastomeric Joint Sealants
ASTM C921	(2010) Standard Practice for Determining the Properties of Jacketing Materials for Thermal Insulation
ASTM D2863	(2013) Measuring the Minimum Oxygen Concentration to Support Candle-Like Combustion of Plastics (Oxygen Index)
ASTM D5590	(2000; R 2010; E 2012) Standard Test Method for Determining the Resistance of Paint Films and Related Coatings to Fungal Defacement by Accelerated Four-Week Agar Plate Assay

ASTM D882	(2012) Tensile Properties of Thin Plastic Sheeting
ASTM E2231	(2014) Specimen Preparation and Mounting of Pipe and Duct Insulation Materials to Assess Surface Burning Characteristics
ASTM E84	(2014) Standard Test Method for Surface Burning Characteristics of Building Materials
ASTM E96/E96M	(2013) Standard Test Methods for Water Vapor Transmission of Materials

FM GLOBAL (FM)

FM APP GUIDE	(updated on-line) Approval Guide http://www.approvalguide.com/

INTERNATIONAL ORGANIZATION FOR STANDARDIZATION (ISO)

ISO 2758	(2014) Paper - Determination of Bursting Strength

MANUFACTURERS STANDARDIZATION SOCIETY OF THE VALVE AND FITTINGS INDUSTRY (MSS)

MSS SP-69	(2003; Notice 2012) Pipe Hangers and Supports - Selection and Application (ANSI Approved American National Standard)

MIDWEST INSULATION CONTRACTORS ASSOCIATION (MICA)

MICA Insulation Stds	(1999) National Commercial & Industrial Insulation Standards

NATIONAL FIRE PROTECTION ASSOCIATION (NFPA)

NFPA 90A	(2015) Standard for the Installation of Air Conditioning and Ventilating Systems
NFPA 90B	(2015) Standard for the Installation of Warm Air Heating and Air Conditioning Systems

U.S. DEPARTMENT OF DEFENSE (DOD)

MIL-A-24179	(1969; Rev A; Am 2 1980; Notice 1 1987) Adhesive, Flexible Unicellular-Plastic Thermal Insulation
MIL-A-3316	(1987; Rev C; Am 2 1990) Adhesives, Fire-Resistant, Thermal Insulation
MIL-PRF-19565	(1988; Rev C) Coating Compounds, Thermal Insulation, Fire- and Water-Resistant, Vapor-Barrier

UNDERWRITERS LABORATORIES (UL)

UL 723	(2008; Reprint Aug 2013) Test for Surface Burning Characteristics of Building Materials
UL 94	(2013; Reprint Jul 2014) Standard for Tests for Flammability of Plastic Materials for Parts in Devices and Appliances

1.2 SYSTEM DESCRIPTION

1.2.1 General

Provide field-applied insulation and accessories on mechanical systems as specified herein; factory-applied insulation is specified under the piping, duct or equipment to be insulated. I Field applied insulation materials required for use on Government-furnished items as listed in the SPECIAL CONTRACT REQUIREMENTS shall be furnished and installed by the Contractor.

1.2.2 Recycled Materials

Provide thermal insulation containing recycled materials to the extent practicable, provided that the materials meet all other requirements of this section. The minimum recycled material content of the following insulation are:

Rock Wool	75 percent slag of weight
Fiberglass	20-25 percent glass cullet by weight
Rigid Foam	9 percent recovered material

1.3 SUBMITTALS

Government approval is required for submittals with a "G" designation; submittals not having a "G" designation are for Contractor Quality Control approval. SUBMITTAL PROCEDURES:

Submit the three SD types, SD-02 Shop Drawings, SD-03 Product Data, and SD-08 Manufacturer's Instructions at the same time for each system.

SD-02 Shop Drawings

Pipe Insulation Systems and Associated Accessories
Duct Insulation Systems and Associated Accessories
Equipment Insulation Systems and Associated Accessories

SD-03 Product Data

Pipe Insulation Systems
Duct Insulation Systems
Equipment Insulation Systems

SD-04 Samples

Thermal Insulation
Display Samples

SD-08 Manufacturer's Instructions

Pipe Insulation Systems
Duct Insulation Systems
Equipment Insulation Systems

1.4 QUALITY ASSURANCE

1.4.1 Installer Qualification

Qualified installers shall have successfully completed three or more similar type jobs within the last 5 years.

1.5 DELIVERY, STORAGE, AND HANDLING

Materials shall be delivered in the manufacturer's unopened containers. Materials delivered and placed in storage shall be provided with protection from weather, humidity, dirt, dust and other contaminants. The Contracting Officer may reject insulation material and supplies that become dirty, dusty, wet, or contaminated by some other means. Packages or standard containers of insulation, jacket material, cements, adhesives, and coatings delivered for use, and samples required for approval shall have manufacturer's stamp or label attached giving the name of the manufacturer and brand, and a description of the material, date codes, and approximate shelf life (if applicable). Insulation packages and containers shall be asbestos free.

PART 2 PRODUCTS

2.1 STANDARD PRODUCTS

Provide materials which are the standard products of manufacturers regularly engaged in the manufacture of such products and that essentially duplicate items that have been in satisfactory use for at least 2 years prior to bid opening. Submit a complete list of materials, including manufacturer's descriptive technical literature, performance data, catalog cuts, and installation instructions. The product number, k-value, thickness and furnished accessories including adhesives, sealants and jackets for each mechanical system requiring insulation shall be included. The product data must be copyrighted, have an identifying or publication number, and shall have been published prior to the issuance date of this solicitation. Materials furnished under this section shall be submitted together in a booklet.

2.1.1 Insulation System

Provide insulation systems in accordance with the approved MICA National Insulation Standards plates as supplemented by this specification. Provide field-applied insulation for heating, ventilating, and cooling (HVAC) air distribution systems and piping systems that are located within, on, under, and adjacent to buildings; and for plumbing systems. Insulation shall be CFC and HCFC free.

2.1.2 Surface Burning Characteristics

Unless otherwise specified, insulation shall have a maximum flame spread

index of 25 and a maximum smoke developed index of 50 when tested in accordance with ASTM E84. Flame spread, and smoke developed indexes, shall be determined by ASTM E84 or UL 723. Insulation shall be tested in the same density and installed thickness as the material to be used in the actual construction. Test specimens shall be prepared and mounted according to ASTM E2231.

2.2 MATERIALS

Provide insulation that meets or exceed the requirements of ASHRAE 90.1 - IP. Insulation exterior shall be cleanable, grease resistant, non-flaking and non-peeling. Materials shall be compatible and shall not contribute to corrosion, soften, or otherwise attack surfaces to which applied in either wet or dry state. Materials to be used on stainless steel surfaces shall meet ASTM C795 requirements. Calcium silicate shall not be used on chilled or cold water systems. Materials shall be asbestos free. Provide product recognized under UL 94 (if containing plastic) and listed in FM APP GUIDE.

2.2.1 Adhesives

2.2.1.1 Acoustical Lining Insulation Adhesive

Adhesive shall be a nonflammable, fire-resistant adhesive conforming to ASTM C916, Type I.

2.2.1.2 Mineral Fiber Insulation Cement

Cement shall be in accordance with ASTM C195.

2.2.1.3 Lagging Adhesive

Lagging is the material used for thermal insulation, especially around a cylindrical object. This may include the insulation as well as the cloth/material covering the insulation. To resist mold/mildew, lagging adhesive shall meet ASTM D5590 with 0 growth rating. Lagging adhesives shall be nonflammable and fire-resistant and shall have a maximum flame spread index of 25 and a maximum smoke developed index of 50 when tested in accordance with ASTM E84. Adhesive shall be MIL-A-3316, Class 1, pigmented white red and be suitable for bonding fibrous glass cloth to faced and unfaced fibrous glass insulation board; for bonding cotton brattice cloth to faced and unfaced fibrous glass insulation board; for sealing edges of and bonding glass tape to joints of fibrous glass board; for bonding lagging cloth to thermal insulation; or Class 2 for attaching fibrous glass insulation to metal surfaces. Lagging adhesives shall be applied in strict accordance with the manufacturer's recommendations for pipe and duct insulation.

2.2.1.4 Contact Adhesive

Adhesives may be any of, but not limited to, the neoprene based, rubber based, or elastomeric type that have a maximum flame spread index of 25 and a maximum smoke developed index of 50 when tested in accordance with ASTM E84. The adhesive shall not adversely affect, initially or in service, the insulation to which it is applied, nor shall it cause any corrosive effect on metal to which it is applied. Any solvent dispersing medium or volatile component of the adhesive shall have no objectionable odor and shall not contain any benzene or carbon tetrachloride. The dried adhesive shall not emit nauseous, irritating, or toxic volatile matters or

aerosols when the adhesive is heated to any temperature up to 212 degrees F. The dried adhesive shall be nonflammable and fire resistant. Flexible Elastomeric Adhesive: Comply with MIL-A-24179, Type II, Class I. Provide product listed in FM APP GUIDE.

2.2.2 Caulking

ASTM C920, Type S, Grade NS, Class 25, Use A.

2.2.3 Corner Angles

Nominal 0.016 inch aluminum 1 by 1 inch with factory applied kraft backing. Aluminum shall be ASTM B209, Alloy 3003, 3105, or 5005.

2.2.4 Fittings

Fabricated Fittings are the prefabricated fittings for flexible elastomeric pipe insulation systems in accordance with ASTM C1710. Together with the flexible elastomeric tubes, they provide complete system integrity for retarding heat gain and controlling condensation drip from chilled-water and refrigeration systems. Flexible elastomeric, fabricated fittings provide thermal protection (0.25 k) and condensation resistance (0.05 Water Vapor Transmission factor). For satisfactory performance, properly installed protective vapor retarder/barriers and vapor stops shall be used on high relative humidity and below ambient temperature applications to reduce movement of moisture through or around the insulation to the colder interior surface.

2.2.5 Finishing Cement

ASTM C450: Mineral fiber hydraulic-setting thermal insulating and finishing cement. All cements that may come in contact with Austenitic stainless steel must comply with ASTM C795.

2.2.6 Fibrous Glass Cloth and Glass Tape

Fibrous glass cloth, with 20X20 maximum mesh size, and glass tape shall have maximum flame spread index of 25 and a maximum smoke developed index of 50 when tested in accordance with ASTM E84. Tape shall be 4 inch wide rolls. Class 3 tape shall be 4.5 ounces/square yard. Elastomeric Foam Tape: Black vapor-retarder foam tape with acrylic adhesive containing an anti-microbial additive.

2.2.7 Staples

Outward clinching type ASTM A167, Type 304 or 316 stainless steel.

2.2.8 Jackets

2.2.8.1 Aluminum Jackets

Aluminum jackets shall be corrugated, embossed or smooth sheet, 0.016 inch nominal thickness; ASTM B209, Temper H14, Temper H16, Alloy 3003, 5005, or 3105. Corrugated aluminum jacket shall not be used outdoors. Aluminum jacket securing bands shall be Type 304 stainless steel, 0.015 inch thick, 1/2 inch wide for pipe under 12 inch diameter and 3/4 inch wide for pipe over 12 inch and larger diameter. Aluminum jacket circumferential seam bands shall be 2 by 0.016 inch aluminum matching jacket material. Bands for insulation below ground shall be 3/4 by 0.020

inch thick stainless steel, or fiberglass reinforced tape. The jacket may, at the option of the Contractor, be provided with a factory fabricated Pittsburgh or "Z" type longitudinal joint. When the "Z" joint is used, the bands at the circumferential joints shall be designed by the manufacturer to seal the joints and hold the jacket in place.

2.2.8.2 Polyvinyl Chloride (PVC) Jackets

Polyvinyl chloride (PVC) jacket and fitting covers shall have high impact strength, ultraviolet (UV) resistant rating or treatment and moderate chemical resistance with minimum thickness 0.030 inch.

2.2.8.3 Vapor Barrier/Weatherproofing Jacket

Vapor barrier/weatherproofing jacket shall be laminated self-adhesive, greater than 3 plies standard grade, silver, white, black and embossed or greater than 8 ply (minimum 2.9 mils adhesive); with 0.0000 permeability when tested in accordance with ASTM E96/E96M, using the water transmission rate test method; heavy duty, white or natural; and UV resistant. Flexible Elastomeric exterior foam with factory applied, UV Jacket made with a cold weather acrylic adhesive. Construction of laminate designed to provide UV resistance, high puncture, tear resistance and excellent Water Vapor Transmission (WVT) rate.

2.2.8.4 Vapor Barrier/Vapor Retarder

Apply the following criteria to determine which system is required.

a. On ducts, piping and equipment operating below 60 degrees F or located outside shall be equipped with a vapor barrier.

2.2.9 Vapor Retarder Required

ASTM C921, Type I, minimum puncture resistance 50 Beach units on all surfaces except concealed ductwork, where a minimum puncture resistance of 25 Beach units is acceptable. Minimum tensile strength, 35 pounds/inch width. ASTM C921, Type II, minimum puncture resistance 25 Beach units, tensile strength minimum 20 pounds/inch width. Jackets used on insulation exposed in finished areas shall have white finish suitable for painting without sizing. Based on the application, insulation materials that require manufacturer or fabricator applied pipe insulation jackets are cellular glass, when all joints are sealed with a vapor barrier mastic, and mineral fiber. All non-metallic jackets shall have a maximum flame spread index of 25 and a maximum smoke developed index of 50 when tested in accordance with ASTM E84. Flexible elastomerics require (in addition to vapor barrier skin) vapor retarder jacketing for high relative humidity and below ambient temperature applications.

2.2.9.1 White Vapor Retarder All Service Jacket (ASJ)

ASJ is for use on hot/cold pipes, ducts, or equipment indoors or outdoors if covered by a suitable protective jacket. The product shall meet all physical property and performance requirements of ASTM C1136, Type I, except the burst strength shall be a minimum of 85 psi. ASTM D2863 Limited Oxygen Index (LOI) shall be a minimum of 31.

In addition, neither the outer exposed surface nor the inner-most surface contacting the insulation shall be paper or other moisture-sensitive material. The outer exposed surface shall be white and have an emittance

of not less than 0.80. The outer exposed surface shall be paintable.

2.2.9.2 Vapor Retarder/Vapor Barrier Mastic Coatings

2.2.9.2.1 Vapor Barrier

The vapor barrier shall be self adhesive (minimum 2 mils adhesive, 3 mils embossed) greater than 3 plies standard grade, silver, white, black and embossed white jacket for use on hot/cold pipes. Permeability shall be less than 0.02 when tested in accordance with ASTM E96/E96M. Products shall meet UL 723 or ASTM E84 flame and smoke requirements and shall be UV resistant.

2.2.9.2.2 Vapor Retarder

The vapor retarder coating shall be fire and water resistant and appropriately selected for either outdoor or indoor service. Color shall be white. The water vapor permeance of the compound shall be 0.013 perms or less at 43 mils dry film thickness as determined according to procedure B of ASTM E96/E96M utilizing apparatus described in ASTM E96/E96M. The coating shall be nonflammable, fire resistant type. To resist mold/mildew, coating shall meet ASTM D5590 with 0 growth rating. Coating shall meet MIL-PRF-19565 Type II (if selected for indoor service) and be Qualified Products Database listed. All other application and service properties shall be in accordance with ASTM C647.

2.2.9.3 Laminated Film Vapor Retarder

ASTM C1136, Type I, maximum moisture vapor transmission 0.02 perms, minimum puncture resistance 50 Beach units on all surfaces except concealed ductwork; where Type II, maximum moisture vapor transmission 0.02 perms, a minimum puncture resistance of 25 Beach units is acceptable. Vapor retarder shall have a maximum flame spread index of 25 and a maximum smoke developed index of 50 when tested in accordance with ASTM E84. Flexible Elastomeric exterior foam with factory applied UV Jacket. Construction of laminate designed to provide UV resistance, high puncture, tear resistance and an excellent WVT rate.

2.2.9.4 Polyvinylidene Chloride (PVDC) Film Vapor Retarder

The PVDC film vapor retarder shall have a maximum moisture vapor transmission of 0.02 perms, minimum puncture resistance of 150 Beach units, a minimum tensile strength in any direction of 30 lb/inch when tested in accordance with ASTM D882, and a maximum flame spread index of 25 and a maximum smoke developed index of 50 when tested in accordance with ASTM E84.

2.2.9.5 Polyvinylidene Chloride Vapor Retarder Adhesive Tape

Requirements must meet the same as specified for Laminated Film Vapor Retarder above.

2.2.9.6 Vapor Barrier/Weather Barrier

The vapor barrier shall be greater than 3 ply self adhesive laminate -white vapor barrier jacket- superior performance (less than 0.0000 permeability when tested in accordance with ASTM E96/E96M). Vapor barrier shall meet UL 723 or ASTM E84 25 flame and 50 smoke requirements; and UV resistant. Minimum burst strength 185 psi in accordance with ISO 2758.

Tensile strength 68 lb/inch width (PSTC-1000). Tape shall be as specified for laminated film vapor barrier above.

2.2.10 Vapor Retarder Not Required

ASTM C921, Type II, Class D, minimum puncture resistance 50 Beach units on all surfaces except ductwork, where Type IV, maximum moisture vapor transmission 0.10, a minimum puncture resistance of 25 Beach units is acceptable. Jacket shall have a maximum flame spread index of 25 and a maximum smoke developed index of 50 when tested in accordance with ASTM E84.

2.2.11 Wire

Soft annealed ASTM A580/A580M Type 302, 304 or 316 stainless steel, 16 or 18 gauge.

2.2.12 Insulation Bands

Insulation bands shall be 1/2 inch wide; 26 gauge stainless steel.

2.2.13 Sealants

Sealants shall be chosen from the butyl polymer type, the styrene-butadiene rubber type, or the butyl type of sealants. Sealants shall have a maximum permeance of 0.02 perms based on Procedure B for ASTM E96/E96M, and a maximum flame spread index of 25 and a maximum smoke developed index of 50 when tested in accordance with ASTM E84.

2.3 PIPE INSULATION SYSTEMS

Insulation materials shall conform to Table 1. Insulation thickness shall be as listed in Table 2 and meet or exceed the requirements of ASHRAE 90.1 - IP. Insulation thickness shall be 1inch. Comply with EPA requirements in accordance with Section 01 62 35 RECYCLED/RECOVERED/BIOBASED MATERIALS. Pipe insulation materials shall be limited to those listed herein and shall meet the following requirements:

2.3.1 Aboveground Cold Pipeline (-30 to 60 deg. F)

Insulation for outdoor, indoor, exposed or concealed applications, shall be as follows:

2.3.1.1 Cellular Glass

ASTM C552, Type II, and Type III. Supply the insulation from the fabricator with (paragraph WHITE VAPOR RETARDER ALL SERVICE JACKET (ASJ)) ASJ vapor retarder and installed with all longitudinal overlaps sealed and all circumferential joints ASJ taped or supply the insulation unfaced from the fabricator and install with all longitudinal and circumferential joints sealed with vapor barrier mastic.

2.3.1.2 Flexible Elastomeric Cellular Insulation

Closed-cell, foam- or expanded-rubber materials containing anti-microbial additive, complying with ASTM C534/C534M, Grade 1, Type I or II. Type I, Grade 1 for tubular materials. Type II, Grade 1, for sheet materials. Type I and II shall have vapor retarder/vapor barrier skin on one or both sides of the insulation, and require an additional exterior vapor retarder covering for high relative humidity and below ambient temperature

applications.

2.3.1.3 Mineral Fiber Insulation with Integral Wicking Material (MFIWM)

ASTM C547. Install in accordance with manufacturer's instructions. Do not use in applications exposed to outdoor ambient conditions in climatic zones 1 through 4.

2.3.2 Aboveground Hot Pipeline (Above 60 deg. F)

Insulation for outdoor, indoor, exposed or concealed applications shall meet the following requirements. Supply the insulation with manufacturer's recommended factory-applied jacket/vapor barrier.

2.3.2.1 Mineral Fiber

ASTM C547, Types I, II or III, supply the insulation with manufacturer's recommended factory-applied jacket.

2.3.2.2 Calcium Silicate

ASTM C533, Type I indoor only, or outdoors above 250 degrees F pipe temperature. Supply insulation with the manufacturer's recommended factory-applied jacket/vapor barrier.

2.3.2.3 Cellular Glass

ASTM C552, Type II and Type III. Supply the insulation with manufacturer's recommended factory-applied jacket.

2.3.2.4 Flexible Elastomeric Cellular Insulation

Closed-cell, foam- or expanded-rubber materials containing anti-microbial additive, complying with ASTM C534/C534M, Grade 1, Type I or II to 220 degrees F service. Type I for tubular materials. Type II for sheet materials.

2.3.2.5 Phenolic Insulation

ASTM C1126 Type III to 250 degrees F service shall comply with ASTM C795. Supply the insulation with manufacturer's recommended factory-applied jacket/vapor barrier.

2.3.2.6 Perlite Insulation

ASTM C610

2.4 DUCT INSULATION SYSTEMS

2.4.1 Factory Applied Insulation

Provide factory-applied ASTM C552, cellular glass thermal insulation according to manufacturer's recommendations for insulation with insulation manufacturer's standard reinforced fire-retardant vapor barrier, with identification of installed thermal resistance (R) value and out-of-package R value.

2.4.1.1 Rigid Insulation

Rigid mineral fiber in accordance with ASTM C612, Class 2 (maximum surface temperature 400 degrees F), 3 pcf average, 1-1/2 inch thick, Type IA, IB, II, III, and IV. Alternately, minimum thickness may be calculated in accordance with ASHRAE 90.1 - IP.

2.4.1.2 Blanket Insulation

Blanket flexible mineral fiber insulation conforming to ASTM C585, Type 1, Class B-3, 3/4 pcf nominal, 2.0 inches thick or Type II up to 250 degrees F. Also ASTM C1290 Type III may be used. Alternately, minimum thickness may be calculated in accordance with ASHRAE 90.1 - IP.

2.4.2 Acoustical Duct Lining

2.4.2.1 General

For ductwork indicated or specified in Section 23 00 00 AIR SUPPLY, DISTRIBUTION, VENTILATION, AND EXHAUST SYSTEM to be acoustically lined, provide external insulation in accordance with this specification section and in addition to the acoustical duct lining. Do not use acoustical lining in place of duct wrap or rigid board insulation (insulation on the exterior of the duct).

2.4.2.2 Duct Liner

Flexible Elastomeric Acoustical and Conformable Duct Liner Materials: Flexible Elastomeric Thermal, Acoustical and Conformable Insulation Compliance with ASTM C534/C534M Grade 1, Type II; and NFPA 90A or NFPA 90B as applicable.

2.4.3 Duct Insulation Jackets

2.4.3.1 All-Purpose Jacket

Provide insulation with insulation manufacturer's standard reinforced fire-retardant jacket with or without integral vapor barrier as required by the service. In exposed locations, provide jacket with a white surface suitable for field painting.

2.4.3.2 Metal Jackets

2.4.3.2.1 Aluminum Jackets

ASTM B209, Temper H14, minimum thickness of 27 gauge (0.016 inch), with factory-applied polyethylene and kraft paper moisture barrier on inside surface. Provide smooth surface jackets for jacket outside dimension 8 inches and larger. Provide corrugated surface jackets for jacket outside dimension 8 inches and larger. Provide stainless steel bands, minimum width of 1/2 inch.

2.4.3.2.2 Stainless Steel Jackets

ASTM A167 or ASTM A240/A240M; Type 304, minimum thickness of 33 gauge (0.010 inch), smooth surface with factory-applied polyethylene and kraft paper moisture barrier on inside surface. Provide stainless steel bands, minimum width of 1/2 inch.

2.4.3.3 Vapor Barrier/Weatherproofing Jacket

Vapor barrier/weatherproofing jacket shall be laminated self-adhesive (minimum 2 mils adhesive, 3 mils embossed) less than 0.0000 permeability, (greater than 3 ply, standard grade, silver, white, black and embossed or greater than 8 ply (minimum 2.9 mils adhesive), heavy duty white or natural).

2.4.4 Weatherproof Duct Insulation

Provide ASTM C552, cellular glass thermal insulation , and weatherproofing as specified in manufacturer's instruction. Multi-ply, Polymeric Blend Laminate Jacketing: Construction of laminate designed to provide UV resistance, high puncture, tear resistance and an excellent WVT rate.

2.5 EQUIPMENT INSULATION SYSTEMS

Insulate equipment and accessories as specified in Tables 5 and 6. In outside locations, provide insulation 1/2 inch thicker than specified. Increase the specified insulation thickness for equipment where necessary to equal the thickness of angles or other structural members to make a smooth, exterior surface. Submit a booklet containing manufacturer's published installation instructions for the insulation systems. The instructions must be copyrighted, have an identifying or publication number, and shall have been published prior to the issuance date of this solicitation. A booklet is also required by paragraphs titled: Pipe Insulation Systems and Duct Insulation Systems.

PART 3 EXECUTION

3.1 APPLICATION - GENERAL

Insulation shall only be applied to unheated and uncooled piping and equipment. Flexible elastomeric cellular insulation shall not be compressed at joists, studs, columns, ducts, hangers, etc. The insulation shall not pull apart after a one hour period; any insulation found to pull apart after one hour, shall be replaced.

3.1.1 Display Samples

Submit and display, after approval of materials, actual sections of installed systems, properly insulated in accordance with the specification requirements. Such actual sections must remain accessible to inspection throughout the job and will be reviewed from time to time for controlling the quality of the work throughout the construction site. Each material used shall be identified, by indicating on an attached sheet the specification requirement for the material and the material by each manufacturer intended to meet the requirement. The Contracting Officer will inspect display sample sections at the jobsite. Approved display sample sections shall remain on display at the jobsite during the construction period. Upon completion of construction, the display sample sections will be closed and sealed.

3.1.1.1 Pipe Insulation Display Sections

Display sample sections shall include as a minimum an elbow or tee, a valve, dielectric waterways and flanges, a hanger with protection shield and insulation insert, or dowel as required, at support point, method of fastening and sealing insulation at longitudinal lap, circumferential lap,

butt joints at fittings and on pipe runs, and terminating points for each type of pipe insulation used on the job, and for hot pipelines and cold pipelines, both interior and exterior, even when the same type of insulation is used for these services.

3.1.1.2 Duct Insulation Display Sections

Display sample sections for rigid and flexible duct insulation used on the job. Use a temporary covering to enclose and protect display sections for duct insulation exposed to weather

3.1.2 Installation

Except as otherwise specified, material shall be installed in accordance with the manufacturer's written instructions. Insulation materials shall not be applied until tests specified in other sections of this specification are completed. Material such as rust, scale, dirt and moisture shall be removed from surfaces to receive insulation. Insulation shall be kept clean and dry. Insulation shall not be removed from its shipping containers until the day it is ready to use and shall be returned to like containers or equally protected from dirt and moisture at the end of each workday. Insulation that becomes dirty shall be thoroughly cleaned prior to use. If insulation becomes wet or if cleaning does not restore the surfaces to like new condition, the insulation will be rejected, and shall be immediately removed from the jobsite. Joints shall be staggered on multi layer insulation. Mineral fiber thermal insulating cement shall be mixed with demineralized water when used on stainless steel surfaces. Insulation, jacketing and accessories shall be installed in accordance with MICA Insulation Stds plates except where modified herein or on the drawings.

3.1.3 Painting and Finishing

Painting shall be as specified in Section 09 90 00 PAINTS AND COATINGS.

3.1.4 Installation of Flexible Elastomeric Cellular Insulation

Install flexible elastomeric cellular insulation with seams and joints sealed with rubberized contact adhesive. Flexible elastomeric cellular insulation shall not be used on surfaces greater than 220 degrees F. Stagger seams when applying multiple layers of insulation. Protect insulation exposed to weather and not shown to have vapor barrier weatherproof jacketing with two coats of UV resistant finish or PVC or metal jacketing as recommended by the manufacturer after the adhesive is dry and cured.

3.1.4.1 Adhesive Application

Apply a brush coating of adhesive to both butt ends to be joined and to both slit surfaces to be sealed. Allow the adhesive to set until dry to touch but tacky under slight pressure before joining the surfaces. Insulation seals at seams and joints shall not be capable of being pulled apart one hour after application. Insulation that can be pulled apart one hour after installation shall be replaced.

3.1.4.2 Adhesive Safety Precautions

Use natural cross-ventilation, local (mechanical) pickup, and/or general area (mechanical) ventilation to prevent an accumulation of solvent

vapors, keeping in mind the ventilation pattern must remove any heavier-than-air solvent vapors from lower levels of the workspaces. Gloves and spectacle-type safety glasses are recommended in accordance with safe installation practices.

3.1.5 Welding

No welding shall be done on piping, duct or equipment without written approval of the Contracting Officer. The capacitor discharge welding process may be used for securing metal fasteners to duct.

3.1.6 Pipes/Ducts/Equipment That Require Insulation

Insulation is required on all pipes, ducts, or equipment, except for omitted items as specified.

3.2 PIPE INSULATION SYSTEMS INSTALLATION

3.2.1 Pipe Insulation

3.2.1.1 General

Pipe insulation shall be installed on aboveground hot and cold pipeline systems as specified below to form a continuous thermal retarder/barrier, including straight runs, fittings and appurtenances unless specified otherwise. Installation shall be with full length units of insulation and using a single cut piece to complete a run. Cut pieces or scraps abutting each other shall not be used. Pipe insulation shall be omitted on the following:

a. Pipe used solely for fire protection.

b. Chromium plated pipe to plumbing fixtures. However, fixtures for use by the physically handicapped shall have the hot water supply and drain, including the trap, insulated where exposed.

c. Sanitary drain lines.

d. Air chambers.

e. Adjacent insulation.

f. ASME stamps.

g. Access plates of fan housings.

h. Cleanouts or handholes.

3.2.1.2 Pipes Passing Through Walls, Roofs, and Floors

Pipe insulation shall be continuous through the sleeve.

An aAluminum jacket or vapor barrier/weatherproofingJacket or Vapor Barrier/Weatherproofing - self adhesive jacket (minimum 2 mils adhesive, 3 mils embossed) less than 0.0000 permeability, greater than 3 ply standard grade, silver, white, black and embossed with factory applied moisture retarder shall be provided over the insulation wherever penetrations require sealing.

3.2.1.2.1 Penetrate Interior Walls

The aluminum jacket or vapor barrier/weatherproofing - self adhesive jacket (minimum 2 mils adhesive, 3 mils embossed) less than 0.0000 permeability, greater than 3 plies standard grade, silver, white, black and embossed shall extend 2 inches beyond either side of the wall and shall be secured on each end with a band.

3.2.1.2.2 Penetrating Floors

Extend the aluminum jacket from a point below the backup material to a point 10 inches above the floor with one band at the floor and one not more than 1 inch from the end of the aluminum jacket.

3.2.1.2.3 Penetrating Exterior Walls

Continue the aluminum jacket required for pipe exposed to weather through the sleeve to a point 2 inches beyond the interior surface of the wall.

3.2.1.3 Pipes Passing Through Hangers

Insulation, whether hot or cold application, shall be continuous through hangers. All horizontal pipes 2 inches and smaller shall be supported on hangers with the addition of a Type 40 protection shield to protect the insulation in accordance with MSS SP-69. Whenever insulation shows signs of being compressed, or when the insulation or jacket shows visible signs of distortion at or near the support shield, insulation inserts as specified below for piping larger than 2 inches shall be installed, or factory insulated hangers (designed with a load bearing core) can be used.

3.2.1.3.1 Vertical Pipes

Supported with either Type 8 or Type 42 riser clamps with the addition of two Type 40 protection shields in accordance with MSS SP-69 covering the 360-degree arc of the insulation. An insulation insert of cellular glass or calcium silicate shall be installed between each shield and the pipe. The insert shall cover the 360-degree arc of the pipe. Inserts shall be the same thickness as the insulation, and shall extend 2 inches on each end beyond the protection shield. When insulation inserts are required in accordance with the above, and the insulation thickness is less than 1 inch, wooden or cork dowels or blocks may be installed between the pipe and the shield to prevent the hanger from crushing the insulation, as an option instead of installing insulation inserts. The insulation jacket shall be continuous over the wooden dowel, wooden block, or insulation insert. The vertical weight of the pipe shall be supported with hangers located in a horizontal section of the pipe. When the pipe riser is longer than 30 feet, the weight of the pipe shall be additionally supported with hangers in the vertical run of the pipe that are directly clamped to the pipe, penetrating the pipe insulation. These hangers shall be insulated and the insulation jacket sealed as indicated herein for anchors in a similar service.

3.2.1.3.2 Inserts

Covered with a jacket material of the same appearance and quality as the adjoining pipe insulation jacket, overlap the adjoining pipe jacket 1-1/2 inches, and seal as required for the pipe jacket. The jacket material used to cover inserts in flexible elastomeric cellular insulation shall

conform to ASTM C1136, Type 1, and is allowed to be of a different material than the adjoining insulation material.

3.2.1.4 Flexible Elastomeric Cellular Pipe Insulation

Flexible elastomeric cellular pipe insulation shall be tubular form for pipe sizes 6 inches and less. Grade 1, Type II sheet insulation used on pipes larger than 6 inches shall not be stretched around the pipe. On pipes larger than 12 inches, the insulation shall be adhered directly to the pipe on the lower 1/3 of the pipe. Seams shall be staggered when applying multiple layers of insulation. Sweat fittings shall be insulated with miter-cut pieces the same size as on adjacent piping. Screwed fittings shall be insulated with sleeved fitting covers fabricated from miter-cut pieces and shall be overlapped and sealed to the adjacent pipe insulation. Type II requires an additional exterior vapor retarder/barrier covering for high relative humidity and below ambient temperature applications.

3.2.1.5 Pipe Insulation Material and Thickness

TABLE 1					
Insulation Material for Piping					
Service					
	Material	Specification	Type	Class	VR/VB Req'd
	Faced Phenolic	ASTM C1126	III		Yes
	Perlite	ASTM C610			No
	Flexible Elastomeric Cellular	ASTM C534/C534M	I	2	No
Refrigerant Suction Piping (35 degrees F nominal)					
	Flexible Elastomeric Cellular	ASTM C534/C534M	I		No
	Cellular Glass	ASTM C552	II	1	Yes
Condensate Drain Located Inside Building					
	Cellular	ASTM C552	II	2	No
	Flexible Elastomeric Cellular	ASTM C534/C534M	I		No

TABLE 2						
Piping Insulation Thickness (inch) Do not use integral wicking material in Chilled water applications exposed to outdoor ambient conditions in climatic zones 1 through 4.						
Service						
	Material	Tube And Pipe Size (inch)				
		<1	1-<1.5	1.5-<4	4-<8	> or = >8
Heating Hot Water Supply & Return, Heated Oil (Max 250 F)						
	Mineral Fiber	1.5	1.5	2	2	2
	Calcium Silicate	2.5	2.5	3	3	3
	Cellular Glass	2	2.5	3	3	3
	Perlite	2.5	2.5	3	3	3
	Flexible Elastomeric Cellular	1	1	1	N/A	N/A
Refrigerant Suction Piping (35 degrees F nominal)						
	Flexible Elastomeric Cellular	1	1	1	N/A	N/A
	Cellular Glass	1.5	1.5	1.5	1.5	1.5
Condensate Drain Located Inside Building						
	Cellular Glass	1.5	1.5	1.5	1.5	1.5
	Flexible Elastomeric Cellular	1	1	1	N/A	N/A

3.2.2 Aboveground Hot Pipelines

3.2.2.1 General Requirements

All hot pipe lines above 60 degrees F, except those piping listed in subparagraph Pipe Insulation in PART 3 as to be omitted, shall be insulated in accordance with Table 2. This includes but is not limited to the following:

b. Steam.

d. Hot water heating.

Insulation shall be covered, in accordance with manufacturer's recommendations, with a factory applied Type I jacket or field applied aluminum where required or seal welded PVC.

3.2.2.2 Insulation for Fittings and Accessories

Pipe insulation shall be tightly butted to the insulation of the fittings and accessories. The butted joints and ends shall be sealed with joint sealant. Insulation shall be marked showing the location of unions, strainers, check valves and other components that would otherwise be hidden from view by the insulation.

3.2.2.2.1 Precut or Preformed

Place precut or preformed insulation around all fittings and accessories. Insulation shall be the same insulation as the pipe insulation, including same density, thickness, and thermal conductivity.

3.2.2.2.2 Rigid Preformed

Where precut/preformed is unavailable, rigid preformed pipe insulation sections may be segmented into the shape required. Insulation of the same thickness and conductivity as the adjoining pipe insulation shall be used. If nesting size insulation is used, the insulation shall be overlapped 2 inches or one pipe diameter. Elbows insulated using segments shall conform to MICA Tables 12.20 "Mitered Insulation Elbow".

3.2.3 Piping Exposed to Weather

Piping exposed to weather shall be insulated and jacketed as specified for the applicable service inside the building. After this procedure, a laminated self-adhesive (minimum 2 mils adhesive, 3 mils embossed) vapor barrier/weatherproofing jacket - less than 0.0000 permeability (greater than 3 ply, standard grade, silver, white, black and embossed aluminum jacket or PVC jacket shall be applied. PVC jacketing requires no factory-applied jacket beneath it, however an all service jacket shall be applied if factory applied jacketing is not furnished. Flexible elastomeric cellular insulation exposed to weather shall be treated in accordance with paragraph INSTALLATION OF FLEXIBLE ELASTOMERIC CELLULAR INSULATION in PART 3.

3.2.3.1 Aluminum Jacket

The jacket for hot piping may be factory applied. The jacket shall overlap not less than 2 inches at longitudinal and circumferential joints and shall be secured with bands at not more than 12 inch centers. Longitudinal joints shall be overlapped down to shed water and located at 4 or 8 o'clock positions. Joints on piping 60 degrees F and below shall be sealed with metal jacketing/flashing sealant while overlapping to prevent moisture penetration. Where jacketing on piping 60 degrees F and below abuts an un-insulated surface, joints shall be caulked to prevent moisture penetration. Joints on piping above 60 degrees F shall be sealed with a moisture retarder.

3.2.3.2 Insulation for Fittings

Flanges, unions, valves, fittings, and accessories shall be insulated and finished as specified for the applicable service. Two coats of breather emulsion type weatherproof mastic (impermeable to water, permeable to air) recommended by the insulation manufacturer shall be applied with glass tape embedded between coats. Tape overlaps shall be not less than 1 inch and the adjoining aluminum jacket not less than 2 inches. Factory preformed aluminum jackets may be used in lieu of the above. Molded PVC fitting covers shall be provided when PVC jackets are used for straight runs of pipe. PVC fitting covers shall have adhesive welded joints and shall be weatherproof laminated self-adhesive (minimum 2 mils adhesive, 3 mils embossed) vapor barrier/weatherproofing jacket - less than 0.0000 permeability, (greater than 3 ply, standard grade, silver, white, black and embossed, and UV resistant.

3.2.3.3 PVC Jacket

PVC jacket shall be ultraviolet resistant and adhesive welded weather tight with manufacturer's recommended adhesive. Installation shall include provision for thermal expansion.

3.3 DUCT INSULATION SYSTEMS INSTALLATION

Except for oven hood exhaust duct insulation, corner angles shall be installed on external corners of insulation on ductwork in exposed finished spaces before covering with jacket. Duct insulation shall be omitted on exposed supply and return ducts in air conditioned spaces where the difference between supply air temperature and room air temperature is less than 15 degrees F unless otherwise shown. Air conditioned spaces shall be defined as those spaces directly supplied with cooled conditioned air (or provided with a cooling device such as a fan-coil unit) and heated conditioned air (or provided with a heating device such as a unit heater, radiator or convector).

3.3.1 Duct Insulation Thickness

Duct insulation thickness shall be in accordance with Table 4.

Table 4 - Minimum Duct Insulation (inches)	
Cold Air Ducts	2.0
Relief Ducts	1.5
Fresh Air Intake Ducts	1.5
Warm Air Ducts	2.0
Relief Ducts	1.5
Fresh Air Intake Ducts	1.5

3.3.2 Insulation and Vapor Retarder/Vapor Barrier for Cold Air Duct

Insulation and vapor retarder/vapor barrier shall be provided for the

following cold air ducts and associated equipment.

a. Supply ducts.

b. Return air ducts.

c. Relief ducts.

d. Flexible run-outs (field-insulated).

e. Plenums.

f. Duct-mounted coil casings.

h. Coil casings.

i. Fresh air intake ducts.

j. Filter boxes.

k. Mixing boxes (field-insulated).

l. Supply fans (field-insulated).

Insulation for rectangular ducts shall be flexible type where concealed, minimum density 3/4 pcf, and rigid type where exposed, minimum density 3 pcf. Insulation for both concealed or exposed round/oval ducts shall be flexible type, minimum density 3/4 pcf or a semi rigid board, minimum density 3 pcf, formed or fabricated to a tight fit, edges beveled and joints tightly butted and staggered. Insulation for all exposed ducts shall be provided with either a white, paint-able, factory-applied Type I jacket or a field applied vapor retarder/vapor barrier jacket coating finish as specified, the total field applied dry film thickness shall be approximately 1/16 inch. Insulation on all concealed duct shall be provided with a factory-applied Type I or II vapor retarder/vapor barrier jacket. Duct insulation shall be continuous through sleeves and prepared openings except firewall penetrations. Duct insulation terminating at fire dampers, shall be continuous over the damper collar and retaining angle of fire dampers, which are exposed to unconditioned air and which may be prone to condensate formation. Duct insulation and vapor retarder/vapor barrier shall cover the collar, neck, and any un-insulated surfaces of diffusers, registers and grills. Vapor retarder/vapor barrier materials shall be applied to form a complete unbroken vapor seal over the insulation. Sheet Metal Duct shall be sealed in accordance with Section 23 00 00 AIR SUPPLY, DISTRIBUTION, VENTILATION, AND EXHAUST SYSTEM.

3.3.2.1 Installation on Concealed Duct

a. For rectangular, oval or round ducts, flexible insulation shall be attached by applying adhesive around the entire perimeter of the duct in 6 inch wide strips on 12 inch centers.

b. For rectangular and oval ducts, 24 inches and larger insulation shall

be additionally secured to bottom of ducts by the use of mechanical fasteners. Fasteners shall be spaced on 16 inch centers and not more than 16 inches from duct corners.

c. For rectangular, oval and round ducts, mechanical fasteners shall be provided on sides of duct risers for all duct sizes. Fasteners shall be spaced on 16 inch centers and not more than 16 inches from duct corners.

d. Insulation shall be impaled on the mechanical fasteners (self stick pins) where used and shall be pressed thoroughly into the adhesive. Care shall be taken to ensure vapor retarder/vapor barrier jacket joints overlap 2 inches. The insulation shall not be compressed to a thickness less than that specified. Insulation shall be carried over standing seams and trapeze-type duct hangers.

e. Where mechanical fasteners are used, self-locking washers shall be installed and the pin trimmed and bent over.

f. Jacket overlaps shall be secured with staples and tape as necessary to ensure a secure seal. Staples, tape and seams shall be coated with a brush coat of vapor retarder coating or PVDC adhesive tape or greater than 3 ply laminate (minimum 2 mils adhesive, 3 mils embossed) - less than 0.0000 perm adhesive tape.

g. Breaks in the jacket material shall be covered with patches of the same material as the vapor retarder jacket. The patches shall extend not less than 2 inches beyond the break or penetration in all directions and shall be secured with tape and staples. Staples and tape joints shall be sealed with a brush coat of vapor retarder coating or PVDC adhesive tape or greater than 3 ply laminate (minimum 2 mils adhesive, 3 mils embossed) - less than 0.0000 perm adhesive tape.

h. At jacket penetrations such as hangers, thermometers, and damper operating rods, voids in the insulation shall be filled and the penetration sealed with a brush coat of vapor retarder coating or PVDC adhesive tape greater than 3 ply laminate (minimum 2 mils adhesive, 3 mils embossed) - less than 0.0000 perm adhesive tape.

i. Insulation terminations and pin punctures shall be sealed and flashed with a reinforced vapor retarder coating finish or tape with a brush coat of vapor retarder coating.. The coating shall overlap the adjoining insulation and un-insulated surface 2 inches. Pin puncture coatings shall extend 2 inches from the puncture in all directions.

j. Where insulation standoff brackets occur, insulation shall be extended under the bracket and the jacket terminated at the bracket.

3.3.2.2 Installation on Exposed Duct Work

a. For rectangular ducts, rigid insulation shall be secured to the duct by mechanical fasteners on all four sides of the duct, spaced not more than 12 inches apart and not more than 3 inches from the edges of the insulation joints. A minimum of two rows of fasteners shall be provided for each side of duct 12 inches and larger. One row shall be provided for each side of duct less than 12 inches. Mechanical fasteners shall be as corrosion resistant as G60 coated galvanized steel, and shall indefinitely sustain a 50 lb tensile dead load test

perpendicular to the duct wall.

b. Form duct insulation with minimum jacket seams. Fasten each piece of rigid insulation to the duct using mechanical fasteners. When the height of projections is less than the insulation thickness, insulation shall be brought up to standing seams, reinforcing, and other vertical projections and shall not be carried over. Vapor retarder/barrier jacket shall be continuous across seams, reinforcing, and projections. When height of projections is greater than the insulation thickness, insulation and jacket shall be carried over. Apply insulation with joints tightly butted. Neatly bevel insulation around name plates and access plates and doors.

c. Impale insulation on the fasteners; self-locking washers shall be installed and the pin trimmed and bent over.

d. Seal joints in the insulation jacket with a 4 inch wide strip of tape. Seal taped seams with a brush coat of vapor retarder coating.

e. Breaks and ribs or standing seam penetrations in the jacket material shall be covered with a patch of the same material as the jacket. Patches shall extend not less than 2 inches beyond the break or penetration and shall be secured with tape and stapled. Staples and joints shall be sealed with a brush coat of vapor retarder coating.

f. At jacket penetrations such as hangers, thermometers, and damper operating rods, the voids in the insulation shall be filled and the penetrations sealed with a flashing sealant.

g. Insulation terminations and pin punctures shall be sealed and flashed with a reinforced vapor retarder coating finish. The coating shall overlap the adjoining insulation and un-insulated surface 2 inches. Pin puncture coatings shall extend 2 inches from the puncture in all directions.

h. Oval and round ducts, flexible type, shall be insulated with factory Type I jacket insulation with minimum density of 3/4 pcf, attached as in accordance with MICA standards.

3.3.3 Insulation for Warm Air Duct

Insulation and vapor barrier shall be provided for the following warm air ducts and associated equipment:.

a. Supply ducts.

b. Return air ducts.

c. Relief air ducts

d. Flexible run-outs (field insulated).

e. Plenums.

f. Duct-mounted coil casings.

h. Coil casings.

i. Fresh air intake ducts.

j. Filter boxes.

k. Mixing boxes.

l. Supply fans.

Insulation for rectangular ducts shall be flexible type where concealed, and rigid type where exposed. Insulation on exposed ducts shall be provided with a white, paint-able, factory-applied Type II jacket, or finished with adhesive finish. Flexible type insulation shall be used for round ducts, with a factory-applied Type II jacket. Insulation on concealed duct shall be provided with a factory-applied Type II jacket. Adhesive finish where indicated to be used shall be accomplished by applying two coats of adhesive with a layer of glass cloth embedded between the coats. The total dry film thickness shall be approximately 1/16 inch. Duct insulation shall be continuous through sleeves and prepared openings. Duct insulation shall terminate at fire dampers and flexible connections.

3.3.3.1 Installation on Concealed Duct

a. For rectangular, oval and round ducts, insulation shall be attached by applying adhesive around the entire perimeter of the duct in 6 inch wide strips on 12 inch centers.

b. For rectangular and oval ducts 24 inches and larger, insulation shall be secured to the bottom of ducts by the use of mechanical fasteners. Fasteners shall be spaced on 18 inch centers and not more than 18 inches from duct corner.

c. For rectangular, oval and round ducts, mechanical fasteners shall be provided on sides of duct risers for all duct sizes. Fasteners shall be spaced on 18 inch centers and not more than 18 inches from duct corners.

d. The insulation shall be impaled on the mechanical fasteners where used. The insulation shall not be compressed to a thickness less than that specified. Insulation shall be carried over standing seams and trapeze-type hangers.

e. Self-locking washers shall be installed where mechanical fasteners are used and the pin trimmed and bent over.

f. Insulation jacket shall overlap not less than 2 inches at joints and the lap shall be secured and stapled on 4 inch centers.

3.3.3.2 Installation on Exposed Duct

a. For rectangular ducts, the rigid insulation shall be secured to the duct by the use of mechanical fasteners on all four sides of the duct, spaced not more than 16 inches apart and not more than 6 inches from the edges of the insulation joints. A minimum of two rows of fasteners shall be provided for each side of duct 12 inches and larger and a minimum of one row for each side of duct less than 12 inches.

b. Duct insulation with factory-applied jacket shall be formed with minimum jacket seams, and each piece of rigid insulation shall be fastened to the duct using mechanical fasteners. When the height of projection is less than the insulation thickness, insulation shall be brought up to standing seams, reinforcing, and other vertical projections and shall not be carried over the projection. Jacket shall be continuous across seams, reinforcing, and projections. Where the height of projections is greater than the insulation thickness, insulation and jacket shall be carried over the projection.

c. Insulation shall be impaled on the fasteners; self-locking washers shall be installed and pin trimmed and bent over.

d. Joints on jacketed insulation shall be sealed with a 4 inch wide strip of tape and brushed with vapor retarder coating.

e. Breaks and penetrations in the jacket material shall be covered with a patch of the same material as the jacket. Patches shall extend not less than 2 inches beyond the break or penetration and shall be secured with adhesive and stapled.

f. Insulation terminations and pin punctures shall be sealed with tape and brushed with vapor retarder coating.

g. Oval and round ducts, flexible type, shall be insulated with factory Type I jacket insulation, minimum density of 3/4 pcf attached by staples spaced not more than 16 inches and not more than 6 inches from the degrees of joints. Joints shall be sealed in accordance with item "d." above.

3.3.4 Duct Test Holes

After duct systems have been tested, adjusted, and balanced, breaks in the insulation and jacket shall be repaired in accordance with the applicable section of this specification for the type of duct insulation to be repaired.

3.3.5 Duct Exposed to Weather

3.3.5.1 Installation

Ducts exposed to weather shall be insulated and finished as specified for the applicable service for exposed duct inside the building. After the above is accomplished, the insulation shall then be further finished as detailed in the following subparagraphs.

3.3.5.2 Round Duct

Laminated self-adhesive (minimum 2 mils adhesive, 3 mils embossed) vapor barrier/weatherproofing jacket - Less than 0.0000 permeability, (greater than 3 ply, standard grade, silver, white, black and embossed or greater than 8 ply, heavy duty, white and natural) membrane shall be applied overlapping material by 3 inches no bands or caulking needed - see manufacturer's recommended installation instructions. Aluminum jacket with factory applied moisture retarder shall be applied with the joints lapped not less than 3 inches and secured with bands located at circumferential laps and at not more than 12 inch intervals throughout. Horizontal joints shall lap down to shed water and located at 4 or 8

o'clock position. Joints shall be sealed with metal jacketing sealant to prevent moisture penetration. Where jacketing abuts an un-insulated surface, joints shall be sealed with metal jacketing sealant.

3.3.5.3 Fittings

Fittings and other irregular shapes shall be finished as specified for rectangular ducts.

3.3.5.4 Rectangular Ducts

Two coats of weather barrier mastic reinforced with fabric or mesh for outdoor application shall be applied to the entire surface. Each coat of weatherproof mastic shall be 1/16 inch minimum thickness. The exterior shall be a metal jacketing applied for mechanical abuse and weather protection, and secured with screws or vapor barrier/weatherproofing jacket less than 0.0000 permeability greater than 3 ply, standard grade, silver, white, black, and embossed or greater than 8 ply, heavy duty white and natural. Membrane shall be applied overlapping material by 3 inches. No bands or caulking needed-see manufacturing recommend installation instructions.

3.4 EQUIPMENT INSULATION SYSTEMS INSTALLATION

3.4.1 General

Removable insulation sections shall be provided to cover parts of equipment that must be opened periodically for maintenance including vessel covers, fasteners, flanges and accessories. Equipment insulation shall be omitted on the following:

Cleanouts.

ASME stamps.

e. Manufacturer's nameplates.

f. Duct Test/Balance Test Holes.

3.4.2 Insulation for Cold Equipment

Cold equipment below 60 degrees F: Insulation shall be furnished on equipment handling media below 60 degrees F including the following:

a. Pumps.

b. Refrigeration equipment parts that are not factory insulated.

c. Drip pans under chilled equipment.

g. Cold and chilled water pumps.

j. Air handling equipment parts that are not factory insulated.

k. Expansion and air separation tanks.

3.4.2.1 Insulation Type

Insulation shall be suitable for the temperature encountered. Material and thicknesses shall be as shown in Table 5:

TABLE 5		
Insulation Thickness for Cold Equipment (inches)		
Equipment handling media at indicated temperature		
	Material	Thickness (inches)
35 to 60 degrees F		
	Cellular Glass	1.5
	Flexible Elastomeric Cellular	1
1 to 34 degrees F		
	Cellular Glass	3
	Flexible Elastomeric Cellular	1.5
Minus 30 to 0 degrees F		
	Cellular Glass	3.5
	Flexible Elastomeric Cellular	1.75

3.4.2.2 Other Equipment

a. Insulation shall be formed or fabricated to fit the equipment. To ensure a tight fit on round equipment, edges shall be beveled and joints shall be tightly butted and staggered.

b. Insulation shall be secured in place with bands or wires at intervals as recommended by the manufacturer but not more than 12 inch centers except flexible elastomeric cellular which shall be adhered with contact adhesive. Insulation corners shall be protected under wires and bands with suitable corner angles.

c. Cellular glass shall be installed in accordance with manufacturer's instructions. Joints and ends shall be sealed with joint sealant, and sealed with a vapor retarder coating.

d. Insulation on heads of heat exchangers shall be removable. Removable section joints shall be fabricated using a male-female shiplap type joint. The entire surface of the removable section shall be finished by applying two coats of vapor retarder coating with a layer of glass cloth embedded between the coats. The total dry thickness of the finish shall be 1/16 inch.

e. Exposed insulation corners shall be protected with corner angles.

f. Insulation on equipment with ribs shall be applied over 6 by 6 inches by 12 gauge welded wire fabric which has been cinched in place, or if approved by the Contracting Officer, spot welded to the equipment over the ribs. Insulation shall be secured to the fabric with J-hooks and 2 by 2 inches washers or shall be securely banded or wired in place on 12 inch centers.

3.4.2.3 Vapor Retarder/Vapor Barrier

Upon completion of installation of insulation, penetrations shall be caulked. Two coats of vapor retarder coating or vapor barrier jacket shall be applied over insulation, including removable sections, with a layer of open mesh synthetic fabric embedded between the coats. The total dry thickness of the finish shall be 1/16 inch. Flashing sealant or vapor barrier tape shall be applied to parting line between equipment and removable section insulation.

3.4.3 Insulation for Hot Equipment

Insulation shall be furnished on equipment handling media above 60 degrees F including the following:

e. Pumps handling media above 130 degrees F.

3.4.3.1 Insulation

Insulation shall be suitable for the temperature encountered. Shell and tube-type heat exchangers shall be insulated for the temperature of the shell medium.

Insulation thickness for hot equipment shall be determined using Table 6:

TABLE 6		
Insulation Thickness for Hot Equipment (inches)		
Equipment handling steam or media at indicated pressure or temperature limit		
	Material	Thickness (inches)
15 psig or 250 degrees F		
	Rigid Mineral Fiber	2
	Flexible Mineral Fiber	2
	Calcium Silicate/Perlite	4
	Cellular Glass	3
	Faced Phenolic Foam	1.5
	Flexible Elastomeric Cellular (<200 F)	1
600 degrees F: Thickness necessary to limit the external temperature of the insulation to 120 F. Heat transfer calculations shall be submitted to substantiate insulation and thickness selection.		

3.4.3.2 Other Equipment

a. Insulation shall be formed or fabricated to fit the equipment. To ensure a tight fit on round equipment, edges shall be beveled and joints shall be tightly butted and staggered.

b. Insulation shall be secured in place with bands or wires at intervals as recommended by the manufacturer but not greater than 12 inch centers except flexible elastomeric cellular which shall be adhered. Insulation corners shall be protected under wires and bands with suitable corner angles.

c. On high vibration equipment, cellular glass insulation shall be set in a coating of bedding compound as recommended by the manufacturer, and joints shall be sealed with bedding compound. Mineral fiber joints shall be filled with finishing cement.

d. Insulation on heads of heat exchangers shall be removable. The removable section joint shall be fabricated using a male-female shiplap type joint. Entire surface of the removable section shall be finished as specified.

e. Exposed insulation corners shall be protected with corner angles.

f. On equipment with ribs, such as boiler flue gas connection, draft fans, and fly ash or soot collectors, insulation shall be applied over 6 by 6 inch by 12 gauge welded wire fabric which has been cinched in place, or if approved by the Contracting Officer, spot welded to the equipment over the ribs. Insulation shall be secured to the fabric

with J-hooks and 2 by 2 inch washers or shall be securely banded or wired in place on 12 inch (maximum) centers.

g. On equipment handling media above 600 degrees F, insulation shall be applied in two or more layers with joints staggered.

h. Upon completion of installation of insulation, penetrations shall be caulked. Two coats of adhesive shall be applied over insulation, including removable sections, with a layer of glass cloth embedded between the coats. The total dry thickness of the finish shall be 1/16 inch. Caulking shall be applied to parting line between equipment and removable section insulation.

3.4.4 Equipment Exposed to Weather

3.4.4.1 Installation

Equipment exposed to weather shall be insulated and finished in accordance with the requirements for ducts exposed to weather in paragraph DUCT INSULATION INSTALLATION.

3.4.4.2 Optional Panels

At the option of the Contractor, prefabricated metal insulation panels may be used in lieu of the insulation and finish previously specified. Thermal performance shall be equal to or better than that specified for field applied insulation. Panels shall be the standard catalog product of a manufacturer of metal insulation panels. Fastenings, flashing, and support system shall conform to published recommendations of the manufacturer for weatherproof installation and shall prevent moisture from entering the insulation. Panels shall be designed to accommodate thermal expansion and to support a 250 pound walking load without permanent deformation or permanent damage to the insulation. Exterior metal cover sheet shall be aluminum and exposed fastenings shall be stainless steel or aluminum.

-- End of Section --

SECTION 23 23 00

REFRIGERANT PIPING
10/07

PART 1 GENERAL

1.1 REFERENCES

The publications listed below form a part of this specification to the extent referenced. The publications are referred to within the text by the basic designation only.

AIR-CONDITIONING, HEATING AND REFRIGERATION INSTITUTE (AHRI)

AHRI 710 I-P	(2009) Performance Rating of Liquid-Line Driers
AHRI 720	(2002) Refrigerant Access Valves and Hose Connectors
ANSI/AHRI 750	(2007) Thermostatic Refrigerant Expansion Valves
ANSI/AHRI 760	(2007) Performance Rating of Solenoid Valves for Use With Volatile Refrigerants

AMERICAN SOCIETY OF HEATING, REFRIGERATING AND AIR-CONDITIONING ENGINEERS (ASHRAE)

ANSI/ASHRAE 15 & 34	(2013; Addenda A 2014; ERTA 2014) ANSI/ASHRAE Standard 15-Safety Standard for Refrigeration Systems and ANSI/ASHRAE Standard 34-Designation and Safety Classification of Refrigerants
ASHRAE 17	(2008) Method of Testing Capacity of Thermostatic Refrigerant Expansion Valves

AMERICAN WELDING SOCIETY (AWS)

AWS A5.8/A5.8M	(2011; Amendment 2012) Specification for Filler Metals for Brazing and Braze Welding
AWS BRH	(2007; 5th Ed) Brazing Handbook
AWS D1.1/D1.1M	(2010; Errata 2011) Structural Welding Code - Steel
AWS Z49.1	(2012) Safety in Welding and Cutting and Allied Processes

ASME INTERNATIONAL (ASME)

ASME B1.20.1	(2013) Pipe Threads, General Purpose (Inch)
ASME B16.11	(2011) Forged Fittings, Socket-Welding and

	Threaded
ASME B16.21	(2011) Nonmetallic Flat Gaskets for Pipe Flanges
ASME B16.22	(2013) Standard for Wrought Copper and Copper Alloy Solder Joint Pressure Fittings
ASME B16.26	(2013) Standard for Cast Copper Alloy Fittings for Flared Copper Tubes
ASME B16.3	(2011) Malleable Iron Threaded Fittings, Classes 150 and 300
ASME B16.5	(2013) Pipe Flanges and Flanged Fittings: NPS 1/2 Through NPS 24 Metric/Inch Standard
ASME B16.9	(2012) Standard for Factory-Made Wrought Steel Buttwelding Fittings
ASME B31.1	(2014; INT 1-47) Power Piping
ASME B31.5	(2013) Refrigeration Piping and Heat Transfer Components
ASME B31.9	(2014) Building Services Piping
ASME B40.100	(2013) Pressure Gauges and Gauge Attachments
ASME BPVC SEC IX	(2010) BPVC Section IX-Welding and Brazing Qualifications

ASTM INTERNATIONAL (ASTM)

ASTM A193/A193M	(2014) Standard Specification for Alloy-Steel and Stainless Steel Bolting Materials for High-Temperature Service and Other Special Purpose Applications
ASTM A334/A334M	(2004a; R 2010) Standard Specification for Seamless and Welded Carbon and Alloy-Steel Tubes for Low-Temperature Service
ASTM A53/A53M	(2012) Standard Specification for Pipe, Steel, Black and Hot-Dipped, Zinc-Coated, Welded and Seamless
ASTM A653/A653M	(2013) Standard Specification for Steel Sheet, Zinc-Coated (Galvanized) or Zinc-Iron Alloy-Coated (Galvannealed) by the Hot-Dip Process
ASTM B117	(2011) Standard Practice for Operating Salt Spray (Fog) Apparatus
ASTM B280	(2013) Standard Specification for Seamless Copper Tube for Air Conditioning and Refrigeration Field Service

ASTM B32	(2008) Standard Specification for Solder Metal
ASTM B62	(2009) Standard Specification for Composition Bronze or Ounce Metal Castings
ASTM B75/B75M	(2011) Standard Specification for Seamless Copper Tube
ASTM B813	(2010) Standard Specification for Liquid and Paste Fluxes for Soldering of Copper and Copper Alloy Tube
ASTM D3308	(2012) PTFE Resin Skived Tape
ASTM D520	(2000; R 2011) Zinc Dust Pigment
ASTM E84	(2014) Standard Test Method for Surface Burning Characteristics of Building Materials

MANUFACTURERS STANDARDIZATION SOCIETY OF THE VALVE AND FITTINGS INDUSTRY (MSS)

MSS SP-58	(2009) Pipe Hangers and Supports - Materials, Design and Manufacture, Selection, Application, and Installation
MSS SP-69	(2003; Notice 2012) Pipe Hangers and Supports - Selection and Application (ANSI Approved American National Standard)

U.S. DEPARTMENT OF DEFENSE (DOD)

UFC 3-310-04	(2013) Seismic Design for Buildings

1.2 SUBMITTALS

Government approval is required for submittals with a "G" designation; submittals not having a "G" designation are for Contractor Quality Control approval. Submit the following in accordance with Section 01 33 00 SUBMITTAL PROCEDURES:

SD-02 Shop Drawings

Refrigerant Piping System

SD-03 Product Data

Refrigerant Piping System
Spare Parts
Qualifications
Refrigerant Piping Tests
Demonstrations
Verification of Dimensions

SD-06 Test Reports

Refrigerant Piping Tests

SD-07 Certificates

Service Organization

SD-10 Operation and Maintenance Data

Maintenance
Operation and Maintenance Manuals

1.3 QUALITY ASSURANCE

1.3.1 Qualifications

Submit 6 copies of qualified procedures, and list of names and identification symbols of qualified welders and welding operators, prior to non-factory welding operations. Piping shall be welded in accordance with the qualified procedures using performance qualified welders and welding operators. Procedures and welders shall be qualified in accordance with ASME BPVC SEC IX. Welding procedures qualified by others, and welders and welding operators qualified by another employer may be accepted as permitted by ASME B31.1. Notify the Contracting Officer 24 hours in advance of tests to be performed at the work site, if practical. The welder or welding operator shall apply the personally assigned symbol near each weld made, as a permanent record. .

1.3.2 Contract Drawings

Because of the small scale of the drawings, it is not possible to indicate all offsets, fittings, and accessories that may be required. Carefully investigate the plumbing, fire protection, electrical, structural and finish conditions that would affect the work to be performed and arrange such work accordingly, furnishing required offsets, fittings, and accessories to meet such conditions.

1.4 DELIVERY, STORAGE, AND HANDLING

Protect stored items from the weather, humidity and temperature variations, dirt and dust, or other contaminants. Proper protection and care of all material both before and during installation is the Contractor's responsibility. Replace any materials found to be damaged at the Contractor's expense. During installation, cap piping and similar openings to keep out dirt and other foreign matter.

1.5 MAINTENANCE

1.5.1 General

Submit Data Package 2 plus operation and maintenance data complying with the requirements of Section 01 78 23 OPERATION AND MAINTENANCE DATA and as specified herein.

1.5.2 Extra Materials

Submit spare parts data for each different item of equipment specified, after approval of detail drawings and not later than 1 months prior to the date of beneficial occupancy. The data shall include a complete list of parts and supplies, with current unit prices and source of supply, a

recommended spare parts list for 1 year of operation, and a list of the parts recommended by the manufacturer to be replaced on a routine basis.

PART 2 PRODUCTS

2.1 STANDARD COMMERCIAL PRODUCTS

a. Provide materials and equipment which are standard products of a manufacturer regularly engaged in the manufacturing of such products, that are of a similar material, design and workmanship and that have been in satisfactory commercial or industrial use for 2 years prior to bid opening.

b. The 2 year use shall include applications of equipment and materials under similar circumstances and of similar size. The 2 years experience shall be satisfactorily completed by a product which has been sold or is offered for sale on the commercial market through advertisements, manufacturer's catalogs, or brochures. Products having less than a 2 year field service record will be acceptable if a certified record of satisfactory field operation, for not less than 6000 hours exclusive of the manufacturer's factory tests, can be shown.

c. Products shall be supported by a service organization. System components shall be environmentally suitable for the indicated locations. Submit a certified list of qualified permanent service organizations for support of the equipment which includes their addresses and qualifications. The service organizations shall be reasonably convenient to the equipment installation and be able to render satisfactory service to the equipment on a regular and emergency basis during the warranty period of the contract.

d. Exposed equipment moving parts, parts that produce high operating temperature, parts which may be electrically energized, and parts that may be a hazard to operating personnel shall be insulated, fully enclosed, guarded, or fitted with other types of safety devices. Install safety devices so that proper operation of equipment is not impaired. Welding and cutting safety requirements shall be in accordance with AWS Z49.1.

e. Manufacturer's standard catalog data, at least 5 weeks prior to the purchase or installation of a particular component, highlighted to show material, size, options, performance charts and curves, etc. in adequate detail to demonstrate compliance with contract requirements. Include in the data manufacturer's recommended installation instructions and procedures. Provide data for the following components as a minimum:

   (1) Piping and Fittings
   (2) Valves
   (3) Piping Accessories
   (4) Pipe Hangers, Inserts, and Supports

2.2 ELECTRICAL WORK

Electrical equipment and wiring shall be in accordance with Section 26 20 00 INTERIOR DISTRIBUTION SYSTEM. Field wiring shall be in accordance with manufacturer's instructions. Manual or automatic control and protective or signal devices required for the operation specified and any control wiring required for controls and devices specified, but not

shown, shall be provided.

2.3 REFRIGERANT PIPING SYSTEM

Refrigerant piping, valves, fittings, and accessories shall be in accordance with ANSI/ASHRAE 15 & 34 and ASME B31.5, except as specified herein. Refrigerant piping, valves, fittings, and accessories shall be compatible with the fluids used and capable of withstanding the pressures and temperatures of the service. Refrigerant piping, valves, and accessories used for refrigerant service shall be cleaned, dehydrated, and sealed (capped or plugged) prior to shipment from the manufacturer's plant. Submit drawings, at least 5 weeks prior to beginning construction, provided in adequate detail to demonstrate compliance with contract requirements. Drawings shall consist of:

a. Piping layouts which identify all valves and fittings.

b. Plans and elevations which identify clearances required for maintenance and operation.

2.4 PIPE, FITTINGS AND END CONNECTIONS (JOINTS)

2.4.1 Steel Pipe

Steel pipe for refrigerant service shall conform to ASTM A53/A53M, Schedule 40, Type E or S, Grades A or B. Type F pipe shall not be used.

2.4.1.1 Welded Fittings and Connections

Butt-welded fittings shall conform to ASME B16.9. Socket-welded fittings shall conform to ASME B16.11. Welded fittings shall be identified with the appropriate grade and marking symbol. Welded valves and pipe connections (both butt-welds and socket-welds types) shall conform to ASME B31.9.

2.4.1.2 Threaded Fittings and Connections

Threaded fitting shall conform to ASME B16.3. Threaded valves and pipe connections shall conform to ASME B1.20.1.

2.4.1.3 Flanged Fittings and Connections

Flanges shall conform to ASME B16.5, Class 150. Gaskets shall be nonasbestos compressed material in accordance with ASME B16.21, 1/16 inch thickness, full face or self-centering flat ring type. This gaskets shall contain aramid fibers bonded with styrene butadeine rubber (SBR) or nitrile butadeine rubber (NBR). Bolts, nuts, and bolt patterns shall conform to ASME B16.5. Bolts shall be high or intermediate strength material conforming to ASTM A193/A193M.

2.4.2 Steel Tubing

Tubing shall be cold-rolled, electric-forged, welded-steel in accordance with ASTM A334/A334M, Grade 1. Joints and fittings shall be socket type provided by the steel tubing manufacturer.

2.4.3 Copper Tubing

Copper tubing shall conform to ASTM B280 annealed or hard drawn as

required. Copper tubing shall be soft annealed where bending is required and hard drawn where no bending is required. Soft annealed copper tubing shall not be used in sizes larger than 1-3/8 inches. Joints shall be brazed except that joints on lines 7/8 inchand smaller may be flared. Cast copper alloy fittings for flared copper tube shall conform to ASME B16.26 and ASTM B62. Wrought copper and bronze solder-joint pressure fittings shall conform to ASME B16.22 and ASTM B75/B75M. Joints and fittings for brazed joint shall be wrought-copper or forged-brass sweat fittings. Cast sweat-type joints and fittings shall not be allowed for brazed joints. Brass or bronze adapters for brazed tubing may be used for connecting tubing to flanges and to threaded ends of valves and equipment.

2.4.4 Solder

Solder shall conform to ASTM B32, grade Sb5, tin-antimony alloy for service pressures up to 150 psig. Solder flux shall be liquid or paste form, non-corrosive and conform to ASTM B813.

2.4.5 Brazing Filler Metal

Filler metal shall conform to AWS A5.8/A5.8M, Type BAg-5 with AWS Type 3 flux, except Type BCuP-5 or BCuP-6 may be used for brazing copper-to-copper joints.

2.5 VALVES

Valves shall be designed, manufactured, and tested specifically for refrigerant service. Valve bodies shall be of brass, bronze, steel, or ductile iron construction. Valves 1 inch and smaller shall have brazed or socket welded connections. Valves larger than 1 inch shall have tongue-and-groove flanged end connections. Threaded end connections shall not be used, except in pilot pressure or gauge lines where maintenance disassembly is required and welded flanges cannot be used. Internal parts shall be removable for inspection or replacement without applying heat or breaking pipe connections. Valve stems exposed to the atmosphere shall be stainless steel or corrosion resistant metal plated carbon steel. Direction of flow shall be legibly and permanently indicated on the valve body. Control valve inlets shall be fitted with integral or adapted strainer or filter where recommended or required by the manufacturer. Purge, charge and receiver valves shall be of manufacturer's standard configuration.

2.5.1 Refrigerant Stop Valves

Valve shall be the globe or full-port ball type with a back-seating stem especially packed for refrigerant service. Valve packing shall be replaceable under line pressure. Valve shall be provided with a wrench operator and a seal cap. Valve shall be the straight or angle pattern design as indicated.

2.5.2 Check Valves

Valve shall be the swing or lift type as required to provide positive shutoff at the differential pressure indicated. Valve shall be provide with resilient seat.

2.5.3 Liquid Solenoid Valves

Valves shall comply with ANSI/AHRI 760 and be suitable for continuous duty

with applied voltages 15 percent under and 5 percent over nominal rated voltage at maximum and minimum encountered pressure and temperature service conditions. Valves shall be direct-acting or pilot-operating type, packless, except that packed stem, seal capped, manual lifting provisions shall be furnished. Solenoid coils shall be moisture-proof, UL approved, totally encapsulated or encapsulated and metal jacketed as required. Valves shall have safe working pressure of 400 psi and a maximum operating pressure differential of at least 200 psi at 85 percent rated voltage. Valves shall have an operating pressure differential suitable for the refrigerant used.

2.5.4 Expansion Valves

Valve shall conform to ANSI/AHRI 750 and ASHRAE 17. Valve shall be the diaphragm and spring-loaded type with internal or external equalizers, and bulb and capillary tubing. Valve shall be provided with an external superheat adjustment along with a seal cap. Internal equalizers may be utilized where flowing refrigerant pressure drop between outlet of the valve and inlet to the evaporator coil is negligible and pressure drop across the evaporator is less than the pressure difference corresponding to 2 degrees F of saturated suction temperature at evaporator conditions. Bulb charge shall be determined by the manufacturer for the application and such that liquid will remain in the bulb at all operating conditions. Gas limited liquid charged valves and other valve devices for limiting evaporator pressure shall not be used without a distributor or discharge tube or effective means to prevent loss of control when bulb becomes warmer than valve body. Pilot-operated valves shall have a characterized plug to provide required modulating control. A de-energized solenoid valve may be used in the pilot line to close the main valve in lieu of a solenoid valve in the main liquid line. An isolatable pressure gauge shall be provided in the pilot line, at the main valve. Automatic pressure reducing or constant pressure regulating expansion valves may be used only where indicted or for constant evaporator loads.

2.5.5 Safety Relief Valves

Valve shall be the two-way type, unless indicated otherwise. Valve shall bear the ASME code symbol. Valve capacity shall be certified by the National Board of Boiler and Pressure Vessel Inspectors. Valve shall be of an automatically reseating design after activation.

2.5.6 Evaporator Pressure Regulators, Direct-Acting

Valve shall include a diaphragm/spring assembly, external pressure adjustment with seal cap, and pressure gauge port. Valve shall maintain a constant inlet pressure by balancing inlet pressure on diaphragm against an adjustable spring load. Pressure drop at system design load shall not exceed the pressure difference corresponding to a 2 degrees F change in saturated refrigerant temperature at evaporator operating suction temperature. Spring shall be selected for indicated maximum allowable suction pressure range.

2.5.7 Refrigerant Access Valves

Refrigerant access valves and hose connections shall be in accordance with AHRI 720.

2.6 PIPING ACCESSORIES

2.6.1 Filter Driers

Driers shall conform to AHRI 710 I-P. Sizes 5/8 inch and larger shall be the full flow, replaceable core type. Sizes 1/2 inch and smaller shall be the sealed type. Cores shall be of suitable desiccant that will not plug, cake, dust, channel, or break down, and shall remove water, acid, and foreign material from the refrigerant. Filter driers shall be constructed so that none of the desiccant will pass into the refrigerant lines. Minimum bursting pressure shall be 1,500 psi.

2.6.2 Sight Glass and Liquid Level Indicator

2.6.2.1 Assembly and Components

Assembly shall be pressure- and temperature-rated and constructed of materials suitable for the service. Glass shall be borosilicate type. Ferrous components subject to condensation shall be electro-galvanized.

2.6.2.2 Gauge Glass

Gauge glass shall include top and bottom isolation valves fitted with automatic checks, and packing followers; red-line or green-line gauge glass; elastomer or polymer packing to suit the service; and gauge glass guard.

2.6.2.3 Bull's-Eye and Inline Sight Glass Reflex Lens

Bull's-eye and inline sight glass reflex lens shall be provided for dead-end liquid service. For pipe line mounting, two plain lenses in one body suitable for backlighted viewing shall be provided.

2.6.2.4 Moisture Indicator

Indicator shall be a self-reversible action, moisture reactive, color changing media. Indicator shall be furnished with full-color-printing tag containing color, moisture and temperature criteria. Unless otherwise indicated, the moisture indicator shall be an integral part of each corresponding sight glass.

2.6.3 Vibration Dampeners

Dampeners shall be of the all-metallic bellows and woven-wire type.

2.6.4 Flexible Pipe Connectors

Connector shall be a composite of interior corrugated phosphor bronze or Type 300 Series stainless steel, as required for fluid service, with exterior reinforcement of bronze, stainless steel or monel wire braid. Assembly shall be constructed with a safety factor of not less than 4 at 300 degrees F. Unless otherwise indicated, the length of a flexible connector shall be as recommended by the manufacturer for the service intended.

2.6.5 Strainers

Strainers used in refrigerant service shall have brass or cast iron body, Y-or angle-pattern, cleanable, not less than 60-mesh noncorroding screen

of an area to provide net free area not less than ten times the pipe diameter with pressure rating compatible with the refrigerant service. Screens shall be stainless steel or monel and reinforced spring-loaded where necessary for bypass-proof construction.

2.6.6 Pressure and Vacuum Gauges

Gauges shall conform to ASME B40.100 and shall be provided with throttling type needle valve or a pulsation dampener and shut-off valve. Gauge shall be a minimum of 3-1/2 inches in diameter with a range from 0 psig to approximately 1.5 times the maximum system working pressure. Each gauge range shall be selected so that at normal operating pressure, the needle is within the middle-third of the range.

2.6.7 Temperature Gauges

Temperature gauges shall be the industrial duty type and be provided for the required temperature range. Gauges shall have Fahrenheit scale in 2 degrees graduations scale (black numbers) on a white face. The pointer shall be adjustable. Rigid stem type temperature gauges shall be provided in thermal wells located within 5 feet of the finished floor. Universal adjustable angle type or remote element type temperature gauges shall be provided in thermal wells located 5 to 7 feet above the finished floor. Remote element type temperature gauges shall be provided in thermal wells located 7 feet above the finished floor.

2.6.7.1 Stem Cased-Glass

Stem cased-glass case shall be polished stainless steel or cast aluminum, 9 inches long, with clear acrylic lens, and non-mercury filled glass tube with indicating-fluid column.

2.6.7.2 Bimetallic Dial

Bimetallic dial type case shall be not less than 3-1/2 inches, stainless steel, and shall be hermetically sealed with clear acrylic lens. Bimetallic element shall be silicone dampened and unit fitted with external calibrator adjustment. Accuracy shall be one percent of dial range.

2.6.7.3 Liquid-, Solid-, and Vapor-Filled Dial

Liquid-, solid-, and vapor-filled dial type cases shall be not less than 3-1/2 inches, stainless steel or cast aluminum with clear acrylic lens. Fill shall be nonmercury, suitable for encountered cross-ambients, and connecting capillary tubing shall be double-braided bronze.

2.6.7.4 Thermal Well

Thermal well shall be identical size, 1/2 or 3/4 inch NPT connection, brass or stainless steel. Where test wells are indicated, provide captive plug-fitted type 1/2 inch NPT connection suitable for use with either engraved stem or standard separable socket thermometer or thermostat. Mercury shall not be used in thermometers. Extended neck thermal wells shall be of sufficient length to clear insulation thickness by 1 inch.

2.6.8 Pipe Hangers, Inserts, and Supports

Pipe hangers, inserts, guides, and supports shall conform to MSS SP-58 and

MSS SP-69.

2.6.9 Escutcheons

Escutcheons shall be chromium-plated iron or chromium-plated brass, either one piece or split pattern, held in place by internal spring tension or set screws.

2.7 FABRICATION

2.7.1 Factory Coating

Unless otherwise specified, equipment and component items, when fabricated from ferrous metal, shall be factory finished with the manufacturer's standard finish, except that items located outside of buildings shall have weather resistant finishes that will withstand 125 hours exposure to the salt spray test specified in ASTM B117 using a 5 percent sodium chloride solution. Immediately after completion of the test, the specimen shall show no signs of blistering, wrinkling, cracking, or loss of adhesion and no sign of rust creepage beyond 1/8 inch on either side of the scratch mark. Cut edges of galvanized surfaces where hot-dip galvanized sheet steel is used shall be coated with a zinc-rich coating conforming to ASTM D520, Type I.

2.7.2 Factory Applied Insulation

Refrigerant suction lines between the cooler and each compressor and cold gas inlet connections to gas cooled motors Refrigerant pumps and exposed chilled water lines on absorption chillers shall be insulated with not less than 3/4 inch thick unicellular plastic foam. Factory insulated items installed outdoors are not required to be fire-rated. As a minimum, factory insulated items installed indoors shall have a flame spread index no higher than 75 and a smoke developed index no higher than 150. Factory insulated items (no jacket) installed indoors and which are located in air plenums, in ceiling spaces, and in attic spaces shall have a flame spread index no higher than 25 and a smoke developed index no higher than 50. Flame spread and smoke developed indexes shall be determined by ASTM E84. Insulation shall be tested in the same density and installed thickness as the material to be used in the actual construction. Material supplied by a manufacturer with a jacket shall be tested as a composite material. Jackets, facings, and adhesives shall have a flame spread index no higher than 25 and a smoke developed index no higher than 50 when tested in accordance with ASTM E84.

PART 3 EXECUTION

3.1 EXAMINATION

After becoming familiar with all details of the work, perform a verification of dimensions in the field. Submit a letter, at least 2 weeks prior to beginning construction, including the date the site was visited, conformation of existing conditions, and any discrepancies found before performing any work.

3.2 INSTALLATION

Pipe and fitting installation shall conform to the requirements of ASME B31.1. Cut pipe accurately to measurements established at the jobsite, and work into place without springing or forcing, completely

clearing all windows, doors, and other openings. Cutting or other weakening of the building structure to facilitate piping installation are not permitted without written approval. Cut pipe or tubing square, removeremoved by reaming, and permit free expansion and contraction without causing damage to the building structure, pipe, joints, or hangers.

3.2.1 Directional Changes

Make changes in direction with fittings, except that bending of pipe 4 inches and smalleris permitted, provided a pipe bender is used and wide weep bends are formed. Mitering or notching pipe or other similar construction to form elbows or tees is not permitted. The centerline radius of bends shall not be less than 6 diameters of the pipe. Bent pipe showing kinks, wrinkles, flattening, or other malformations will not be accepted.

3.2.2 Functional Requirements

Piping shall be installed 1/2 inch/10 feet of pipe in the direction of flow to ensure adequate oil drainage. Open ends of refrigerant lines or equipment shall be properly capped or plugged during installation to keep moisture, dirt, or other foreign material out of the system. Piping shall remain capped until installation. Equipment piping shall be in accordance with the equipment manufacturer's recommendations and the contract drawings. Equipment and piping arrangements shall fit into space allotted and allow adequate acceptable clearances for installation, replacement, entry, servicing, and maintenance.

3.2.3 Fittings and End Connections

3.2.3.1 Threaded Connections

Make threaded connections with tapered threads and make tight with PTFE tape complying with ASTM D3308 or equivalent thread-joint compound applied to the male threads only. Show not more than three threads after the joint is made.

3.2.3.2 Brazed Connections

Perform brazing in accordance with AWS BRH, except as modified herein. During brazing, fill the pipe and fittings with a pressure regulated inert gas, such as nitrogen, to prevent the formation of scale. Before brazing copper joints, clean both the outside of the tube and the inside of the fitting with a wire fitting brush until the entire joint surface is bright and clean. Do not use brazing flux. Remove surplus brazing material at all joints. Make steel tubing joints in accordance with the manufacturer's recommendations. Paint joints in steel tubing with the same material as the baked-on coating within 8 hours after joints are made. Protect tubing against oxidation during brazing by continuous purging of the inside of the piping using nitrogen. Support piping prior to brazing and do not spring or force.

3.2.3.3 Welded Connections

Welded joints in steel refrigerant piping shall be fusion-welded. Branch connections shall be made with welding tees or forged welding branch outlets. Pipe shall be thoroughly cleaned of all scale and foreign matter before the piping is assembled. During welding the pipe and fittings shall be filled with an inert gas, such as nitrogen, to prevent the

formation of scale. Beveling, alignment, heat treatment, and inspection of weld shall conform to ASME B31.1. Weld defects shall be removed and rewelded at no additional cost to the Government. Electrodes shall be stored and dried in accordance with AWS D1.1/D1.1M or as recommended by the manufacturer. Electrodes that have been wetted or that have lost any of their coating shall not be used.

3.2.3.4 Flared Connections

When flared connections are used, a suitable lubricant shall be used between the back of the flare and the nut in order to avoid tearing the flare while tightening the nut.

3.2.3.5 Flanged Connections

When steel refrigerant piping is used, union or flange joints shall be provided in each line immediately preceding the connection to each piece of equipment requiring maintenance, such as compressors, coils, chillers, control valves, and other similar items. Flanged joints shall be assembled square end tight with matched flanges, gaskets, and bolts. Gaskets shall be suitable for use with the refrigerants to be handled.

3.2.4 Valves

3.2.4.1 General

Refrigerant stop valves shall be installed on each side of each piece of equipment such as compressors condensers, evaporators, receivers, and other similar items in multiple-unit installation, to provide partial system isolation as required for maintenance or repair. Stop valves shall be installed with stems horizontal unless otherwise indicated. Ball valves shall be installed with stems positioned to facilitate operation and maintenance. Isolating valves for pressure gauges and switches shall be external to thermal insulation. Safety switches shall not be fitted with isolation valves. Filter dryers having access ports may be considered a point of isolation. Purge valves shall be provided at all points of systems where accumulated noncondensable gases would prevent proper system operation. Valves shall be furnished to match line size, unless otherwise indicated or approved.

3.2.4.2 Expansion Valves

Expansion valves shall be installed with the thermostatic expansion valve bulb located on top of the suction line when the suction line is less than 2-1/8 inches in diameter and at the 4 o'clock or 8 o'clock position on lines larger than 2-1/8 inches. The bulb shall be securely fastened with two clamps. The bulb shall be insulated. The bulb shall installed in a horizontal portion of the suction line, if possible, with the pigtail on the bottom. If the bulb must be installed in a vertical line, the bulb tubing shall be facing up.

3.2.4.3 Valve Identification

Each system valve, including those which are part of a factory assembly, shall be tagged. Tags shall be in alphanumeric sequence, progressing in direction of fluid flow. Tags shall be embossed, engraved, or stamped plastic or nonferrous metal of various shapes, sized approximately 1-3/8 inch diameter, or equivalent dimension, substantially attached to a component or immediately adjacent thereto. Tags shall be attached with

nonferrous, heavy duty, bead or link chain, 14 gauge annealed wire, nylon cable bands or as approved. Tag numbers shall be referenced in Operation and Maintenance Manuals and system diagrams.

3.2.5 Vibration Dampers

Vibration damper shall be provided in the suction and discharge lines on spring mounted compressors. Vibration dampers shall be installed parallel with the shaft of the compressor and shall be anchored firmly at the upstream end on the suction line and the downstream end in the discharge line.

3.2.6 Strainers

Strainers shall be provided immediately ahead of solenoid valves and expansion devices. Strainers may be an integral part of an expansion valve.

3.2.7 Filter Dryer

A liquid line filter dryer shall be provided on each refrigerant circuit located such that all liquid refrigerant passes through a filter dryer. Dryers shall be sized in accordance with the manufacturer's recommendations for the system in which it is installed. Dryers shall be installed such that it can be isolated from the system, the isolated portion of the system evacuated, and the filter dryer replaced. Dryers shall be installed in the horizontal position except replaceable core filter dryers may be installed in the vertical position with the access flange on the bottom.

3.2.8 Sight Glass

A moisture indicating sight glass shall be installed in all refrigerant circuits down stream of all filter dryers and where indicated. Site glasses shall be full line size.

3.2.9 Discharge Line Oil Separator

Discharge line oil separator shall be provided in the discharge line from each compressor. Oil return line shall be connected to the compressor as recommended by the compressor manufacturer.

3.2.10 Accumulator

Accumulators shall be provided in the suction line to each compressor.

3.2.11 Flexible Pipe Connectors

Connectors shall be installed perpendicular to line of motion being isolated. Piping for equipment with bidirectional motion shall be fitted with two flexible connectors, in perpendicular planes. Reinforced elastomer flexible connectors shall be installed in accordance with manufacturer's instructions. Piping guides and restraints related to flexible connectors shall be provided as required.

3.2.12 Temperature Gauges

Temperature gauges shall be located specifically on, but not limited to the following: the sensing element of each automatic temperature control

device where a thermometer is not an integral part thereof the liquid line leaving a receiver and the suction line at each evaporator or liquid cooler. Thermal wells for insertion thermometers and thermostats shall extend beyond thermal insulation surface not less than 1 inch.

3.2.13 Pipe Hangers, Inserts, and Supports

Pipe hangers, inserts, and supports shall conform to MSS SP-58 and MSS SP-69, except as modified herein. Pipe hanger types 5, 12, and 26 shall not be used. Hangers used to support piping 2 inches and larger shall be fabricated to permit adequate adjustment after erection while still supporting the load. Piping subjected to vertical movement, when operating temperatures exceed ambient temperatures, shall be supported by variable spring hangers and supports or by constant support hangers.

3.2.13.1 Hangers

Do not use Type 3 on insulated piping. Type 24 may be used only on trapeze hanger systems or on fabricated frames.

3.2.13.2 Inserts

Secure Type 18 inserts to concrete forms before concrete is placed. Continuous inserts which allow more adjustments may be used if they otherwise meet the requirements for Type 18 inserts.

3.2.13.3 C-Clamps

Torque Type 19 and 23 C-clamps in accordance with MSS SP-69 and have both locknuts and retaining devices, furnished by the manufacturer. Field-fabricated C-clamp bodies or retaining devices are not acceptable.

3.2.13.4 Angle Attachments

Type 20 attachments used on angles and channels shall be furnished with an added malleable-iron heel plate or adapter.

3.2.13.5 Saddles and Shields

Where Type 39 saddle or Type 40 shield are permitted for a particular pipe attachment application, the Type 39 saddle, connected to the pipe, shall be used on all pipe 4 inches and larger when the temperature of the medium is 60 degrees F or higher. Type 40 shields shall be used on all piping less than 4 inches and all piping 4 inches and larger carrying medium less than 60 degrees F. A high density insulation insert of cellular glass shall be used under the Type 40 shield for piping 2 inches and larger.

3.2.13.6 Horizontal Pipe Supports

Horizontal pipe supports shall be spaced as specified in MSS SP-69 and a support shall be installed not over 1 foot from the pipe fitting joint at each change in direction of the piping. Pipe supports shall be spaced not over 5 feet apart at valves. Pipe hanger loads suspended from steel joist with hanger loads between panel points in excess of 50 pounds shall have the excess hanger loads suspended from panel points.

3.2.13.7 Vertical Pipe Supports

Vertical pipe shall be supported at each floor, except at slab-on-grade,

and at intervals of not more than 15 feet not more than 8 feet from end of risers, and at vent terminations.

3.2.13.8 Pipe Guides

Type 35 guides using, steel, reinforced polytetrafluoroethylene (PTFE) or graphite slides shall be provided where required to allow longitudinal pipe movement. Lateral restraints shall be provided as required. Slide materials shall be suitable for the system operating temperatures, atmospheric conditions, and bearing loads encountered.

3.2.13.9 Steel Slides

Where steel slides do not require provisions for restraint of lateral movement, an alternate guide method may be used. On piping 4 inches and larger, a Type 39 saddle shall be used. On piping under 4 inches, a Type 40 protection shield may be attached to the pipe or insulation and freely rest on a steel slide plate.

3.2.13.10 High Temperature Guides with Cradles

Where there are high system temperatures and welding to piping is not desirable, then the Type 35 guide shall include a pipe cradle, welded to the guide structure and strapped securely to the pipe. The pipe shall be separated from the slide material by at least 4 inches, or by an amount adequate for the insulation, whichever is greater.

3.2.13.11 Multiple Pipe Runs

In the support of multiple pipe runs on a common base member, a clip or clamp shall be used where each pipe crosses the base support member. Spacing of the base support members shall not exceed the hanger and support spacing required for an individual pipe in the multiple pipe run.

3.2.13.12 Seismic Requirements

Piping and attached valves shall be supported and braced to resist seismic loads as specified under UFC 3-310-04 as shown on the drawings. Structural steel required for reinforcement to properly support piping, headers, and equipment but not shown shall be provided under this section.

3.2.13.13 Structural Attachments

Attachment to building structure concrete and masonry shall be by cast-in concrete inserts, built-in anchors, or masonry anchor devices. Inserts and anchors shall be applied with a safety factor not less than 5. Supports shall not be attached to metal decking. Masonry anchors for overhead applications shall be constructed of ferrous materials only. Structural steel brackets required to support piping, headers, and equipment, but not shown, shall be provided under this section.

3.2.14 Pipe Alignment Guides

Pipe alignment guides shall be provided where indicated for expansion loops, offsets, and bends and as recommended by the manufacturer for expansion joints, not to exceed 5 feet on each side of each expansion joint, and in lines 4 inches or smaller not more than 2 feet on each side of the joint.

3.2.15 Pipe Anchors

Anchors shall be provided wherever necessary or indicated to localize expansion or to prevent undue strain on piping. Anchors shall consist of heavy steel collars with lugs and bolts for clamping and attaching anchor braces, unless otherwise indicated. Anchor braces shall be installed in the most effective manner to secure the desired results using turnbuckles where required. Supports, anchors, or stays shall not be attached where they will injure the structure or adjacent construction during installation or by the weight of expansion of the pipeline. Where pipe and conduit penetrations of vapor barrier sealed surfaces occur, these items shall be anchored immediately adjacent to each penetrated surface, to provide essentially zero movement within penetration seal. Detailed drawings of pipe anchors shall be submitted for approval before installation.

3.2.16 Building Surface Penetrations

Sleeves shall not be installed in structural members except where indicated or approved. Sleeves in nonload bearing surfaces shall be galvanized sheet metal, conforming to ASTM A653/A653M, Coating Class G-90, 20 gauge. Sleeves in load bearing surfaces shall be uncoated carbon steel pipe, conforming to ASTM A53/A53M, Standard weight. Sealants shall be applied to moisture and oil-free surfaces and elastomers to not less than 1/2 inch depth. Sleeves shall not be installed in structural members.

3.2.16.1 Refrigerated Space

Refrigerated space building surface penetrations shall be fitted with sleeves fabricated from hand-lay-up or helically wound, fibrous glass reinforced polyester or epoxy resin with a minimum thickness equal to equivalent size Schedule 40 steel pipe. Sleeves shall be constructed with integral collar or cold side shall be fitted with a bonded slip-on flange or extended collar. In the case of masonry penetrations where sleeve is not cast-in, voids shall be filled with latex mixed mortar cast to shape of sleeve and flange/external collar type sleeve shall be assembled with butyl elastomer vapor barrier sealant through penetration to cold side surface vapor barrier overlap and fastened to surface with masonry anchors. Integral cast-in collar type sleeve shall be flashed with not less than 4 inches of cold side vapor barrier overlap of sleeve surface. Normally noninsulated penetrating round surfaces shall be sealed to sleeve bore with mechanically expandable seals in vapor tight manner and remaining warm and cold side sleeve depth shall be insulated with not less than 4 inches of foamed-in-place rigid polyurethane or foamed-in-place silicone elastomer. Vapor barrier sealant shall be applied to finish warm side insulation surface. Warm side of penetrating surface shall be insulated beyond vapor barrier sealed sleeve insulation for a distance which prevents condensation. Wires in refrigerated space surface penetrating conduit shall be sealed with vapor barrier plugs or compound to prevent moisture migration through conduit and condensation therein.

3.2.16.2 General Service Areas

Each sleeve shall extend through its respective wall, floor, or roof, and shall be cut flush with each surface. Pipes passing through concrete or masonry wall or concrete floors or roofs shall be provided with pipe sleeves fitted into place at the time of construction. Sleeves shall be of such size as to provide a minimum of 1/4 inch all-around clearance between bare pipe and sleeves or between jacketed-insulation and sleeves.

Except in pipe chases or interior walls, the annular space between pipe and sleeve or between jacket over-insulation and sleeve shall be sealed in accordance with Section 07 92 00 JOINT SEALANTS.

3.2.16.3 Waterproof Penetrations

Pipes passing through roof or floor waterproofing membrane shall be installed through a 17 ounce copper sleeve, or a 0.032 inch thick aluminum sleeve, each within an integral skirt or flange. Flashing sleeve shall be suitably formed, and skirt or flange shall extend not less than 8 inches from the pipe and be set over the roof or floor membrane in a troweled coating of bituminous cement. The flashing sleeve shall extend up the pipe a minimum of 2 inches above the roof or floor penetration. The annular space between the flashing sleeve and the bare pipe or between the flashing sleeve and the metal-jacket-covered insulation shall be sealed as indicated. Penetrations shall be sealed by either one of the following methods.

3.2.16.3.1 Waterproofing Clamping Flange

Pipes up to and including 10 inches in diameter passing through roof or floor waterproofing membrane may be installed through a cast iron sleeve with caulking recess, anchor lugs, flashing clamp device, and pressure ring with brass bolts. Waterproofing membrane shall be clamped into place and sealant shall be placed in the caulking recess.

3.2.16.3.2 Modular Mechanical Type Sealing Assembly

In lieu of a waterproofing clamping flange and caulking and sealing of annular space between pipe and sleeve or conduit and sleeve, a modular mechanical type sealing assembly may be installed. Seals shall consist of interlocking synthetic rubber links shaped to continuously fill the annular space between the pipe/conduit and sleeve with corrosion protected carbon steel bolts, nuts, and pressure plates. Links shall be loosely assembled with bolts to form a continuous rubber belt around the pipe with a pressure plate under each bolt head and each nut. After the seal assembly is properly positioned in the sleeve, tightening of the bolt shall cause the rubber sealing elements to expand and provide a watertight seal rubber sealing elements to expand and provide a watertight seal between the pipe/conduit seal between the pipe/conduit and the sleeve. Each seal assembly shall be sized as recommended by the manufacturer to fit the pipe/conduit and sleeve involved. The Contractor electing to use the modular mechanical type seals shall provide sleeves of the proper diameters.

3.2.16.4 Fire-Rated Penetrations

Penetration of fire-rated walls, partitions, and floors shall be sealed as specified in Section 07 84 00 FIRESTOPPING.

3.2.16.5 Escutcheons

Finished surfaces where exposed piping, bare or insulated, pass through floors, walls, or ceilings, except in boiler, utility, or equipment rooms, shall be provided with escutcheons. Where sleeves project slightly from floors, special deep-type escutcheons shall be used. Escutcheon shall be secured to pipe or pipe covering.

3.2.17 Access Panels

Access panels shall be provided for all concealed valves, vents, controls, and items requiring inspection or maintenance. Access panels shall be of sufficient size and located so that the concealed items may be serviced and maintained or completely removed and replaced. Access panels shall be as specified in Section 05 50 13 MISCELLANEOUS METAL FABRICATIONS.

3.2.18 Field Applied Insulation

Field installed insulation shall be as specified in Section 23 07 00 THERMAL INSULATION FOR MECHANICAL SYSTEMS, except as defined differently herein.

3.2.19 Field Painting

Painting required for surfaces not otherwise specified, and finish painting of items only primed at the factory are specified in Section 09 90 00 PAINTS AND COATINGS.

3.2.19.1 Color Coding

Color coding for piping identification is specified in Section 09 90 00 PAINTS AND COATINGS.

3.2.20 Identification Tags

Provide identification tags made of brass, engraved laminated plastic or engraved anodized aluminum indicating service and item number on all valves and dampers. Tags shall be 1-3/8 inch minimum diameter and marking shall be stamped or engraved. Indentations shall be black for reading clarity. Tags shall be attached to valves with No. 12 AWG copper wire, chrome-plated beaded chain or plastic straps designed for that purpose.

3.3 CLEANING AND ADJUSTING

Clean uncontaminated system(s) by evacuation and purging procedures currently recommended by refrigerant and refrigerant equipment manufacturers, and as specified herein, to remove small amounts of air and moisture. Systems containing moderate amounts of air, moisture, contaminated refrigerant, or any foreign matter shall be considered contaminated systems. Restoring contaminated systems to clean condition including disassembly, component replacement, evacuation, flushing, purging, and re-charging, shall be performed using currently approved refrigerant and refrigeration manufacturer's procedures. Restoring contaminated systems shall be at no additional cost to the Government as determined by the Contracting Officer. Water shall not be used in any procedure or test.

3.4 TRAINING COURSE

a. Submit a schedule, at least 2 weeks prior to the date of the proposed training course, which identifies the date, time, and location for the training. Conduct a training course for 2 members of the operating staff as designated by the Contracting Officer. The training period shall consist of a total 40 hours of normal working time and start after the system is functionally completed but prior to final acceptance tests.

b. The field posted instructions shall cover all of the items contained in the approved operation and maintenance manuals as well as demonstrations of routine maintenance operations.

c. Submit 6 complete copies of an operation manual in bound 8 1/2 by 11 inch booklets listing step-by-step procedures required for system startup, operation, abnormal shutdown, emergency shutdown, and normal shutdown at least 4 weeks prior to the first training course. The booklets shall include the manufacturer's name, model number, and parts list. The manuals shall include the manufacturer's name, model number, service manual, and a brief description of all equipment and their basic operating features.

d. Submit 6 complete copies of maintenance manual in bound 8 1/2 x 11 inch booklets listing routine maintenance procedures, possible breakdowns and repairs, and a trouble shooting guide. The manuals shall include piping layouts and simplified wiring and control diagrams of the system as installed.

3.5 REFRIGERANT PIPING TESTS

After all components of the refrigerant system have been installed and connected, subject the entire refrigeration system to pneumatic, evacuation, and startup tests as described herein. Submit a schedule, at least 2 weeks prior to the start of related testing, for each test. Identify the proposed date, time, and location for each test. Conduct tests in the presence of the Contracting Officer. Water and electricity required for the tests will be furnished by the Government. Provide all material, equipment, instruments, and personnel required for the test. Provide the services of a qualified technician, as required, to perform all tests and procedures indicated herein. Field tests shall be coordinated with Section 23 05 93 TESTING, ADJUSTING, AND BALANCING OF HVAC SYSTEMS. Submit 6 copies of the tests report in bound 8 1/2 by 11 inch booklets documenting all phases of the tests performed. The report shall include initial test summaries, all repairs/adjustments made, and the final test results.

3.5.1 Preliminary Procedures

Prior to pneumatic testing, equipment which has been factory tested and refrigerant charged as well as equipment which could be damaged or cause personnel injury by imposed test pressure, positive or negative, shall be isolated from the test pressure or removed from the system. Safety relief valves and rupture discs, where not part of factory sealed systems, shall be removed and openings capped or plugged.

3.5.2 Pneumatic Test

Pressure control and excess pressure protection shall be provided at the source of test pressure. Valves shall be wide open, except those leading to the atmosphere. Test gas shall be dry nitrogen, with minus 70 degree F dewpoint and less than 5 ppm oil. Test pressure shall be applied in two stages before any refrigerant pipe is insulated or covered. First stage test shall be at 10 psi with every joint being tested with a thick soap or color indicating solution. Second stage tests shall raise the system to the minimum refrigerant leakage test pressure specified in ANSI/ASHRAE 15 & 34 with a maximum test pressure 25 percent greater. Pressure above 100 psig shall be raised in 10 percent increments with a pressure acclimatizing period between increments. The initial test

pressure shall be recorded along with the ambient temperature to which the system is exposed. Final test pressures of the second stage shall be maintained on the system for a minimum of 24 hours. At the end of the 24 hour period, the system pressure will be recorded along with the ambient temperature to which the system is exposed. A correction factor of 0.3 psi will be allowed for each degree F change between test space initial and final ambient temperature, plus for increase and minus for a decrease. If the corrected system pressure is not exactly equal to the initial system test pressure, then the system shall be investigated for leaking joints. To repair leaks, the joint shall be taken apart, thoroughly cleaned, and reconstructed as a new joint. Joints repaired by caulking, remelting, or back-welding/brazing shall not be acceptable. Following repair, the entire system shall be retested using the pneumatic tests described above. The entire system shall be reassembled once the pneumatic tests are satisfactorily completed.

3.5.3 Evacuation Test

Following satisfactory completion of the pneumatic tests, the pressure shall be relieved and the entire system shall be evacuated to an absolute pressure of 300 micrometers. During evacuation of the system, the ambient temperature shall be higher than 35 degrees F. No more than one system shall be evacuated at one time by one vacuum pump. Once the desired vacuum has been reached, the vacuum line shall be closed and the system shall stand for 1 hour. If the pressure rises over 500 micrometers after the 1 hour period, then the system shall be evacuated again down to 300 micrometers and let set for another 1 hour period. The system shall not be charged until a vacuum of at least 500 micrometers is maintained for a period of 1 hour without the assistance of a vacuum line. If during the testing the pressure continues to rise, check the system for leaks, repair as required, and repeat the evacuation procedure. During evacuation, pressures shall be recorded by a thermocouple-type, electronic-type, or a calibrated-micrometer type gauge.

3.5.4 System Charging and Startup Test

Following satisfactory completion of the evacuation tests, the system shall be charged with the required amount of refrigerant by raising pressure to normal operating pressure and in accordance with manufacturer's procedures. Following charging, the system shall operate with high-side and low-side pressures and corresponding refrigerant temperatures, at design or improved values. The entire system shall be tested for leaks. Fluorocarbon systems shall be tested with halide torch or electronic leak detectors.

3.5.5 Refrigerant Leakage

If a refrigerant leak is discovered after the system has been charged, the leaking portion of the system shall immediately be isolated from the remainder of the system and the refrigerant pumped into the system receiver or other suitable container. Under no circumstances shall the refrigerant be discharged into the atmosphere.

3.5.6 Contractor's Responsibility

At all times during the installation and testing of the refrigeration system, take steps to prevent the release of refrigerants into the atmosphere. The steps shall include, but not be limited to, procedures which will minimize the release of refrigerants to the atmosphere and the

use of refrigerant recovery devices to remove refrigerant from the system and store the refrigerant for reuse or reclaim. At no time shall more than 3 ounces of refrigerant be released to the atmosphere in any one occurrence. Any system leaks within the first year shall be repaired in accordance with the requirements herein at no cost to the Government including material, labor, and refrigerant if the leak is the result of defective equipment, material, or installation.

-- End of Section --

SECTION 23 64 26

CHILLED, CHILLED-HOT, AND CONDENSER WATER PIPING SYSTEMS
08/09

PART 1 GENERAL

1.1 REFERENCES

The publications listed below form a part of this specification to the extent referenced. The publications are referred to within the text by the basic designation only.

AMERICAN NATIONAL STANDARDS INSTITUTE (ANSI)

ANSI Z21.22/CSA 4.4	(1999; Addenda A 2000, Addenda B 2001; R 2004) Relief Valves for Hot Water Supply Systems

AMERICAN SOCIETY OF SANITARY ENGINEERING (ASSE)

ASSE 1003	(2009) Performance Requirements for Water Pressure Reducing Valves for Domestic Water Distribution Systems - (ANSI approved 2010)

AMERICAN WELDING SOCIETY (AWS)

AWS A5.8/A5.8M	(2011; Amendment 2012) Specification for Filler Metals for Brazing and Braze Welding
AWS BRH	(2007; 5th Ed) Brazing Handbook
AWS D1.1/D1.1M	(2010; Errata 2011) Structural Welding Code - Steel
AWS Z49.1	(2012) Safety in Welding and Cutting and Allied Processes

ASME INTERNATIONAL (ASME)

ASME B1.20.1	(2013) Pipe Threads, General Purpose (Inch)
ASME B16.1	(2010) Gray Iron Pipe Flanges and Flanged Fittings Classes 25, 125, and 250
ASME B16.11	(2011) Forged Fittings, Socket-Welding and Threaded
ASME B16.18	(2012) Cast Copper Alloy Solder Joint Pressure Fittings
ASME B16.21	(2011) Nonmetallic Flat Gaskets for Pipe Flanges
ASME B16.22	(2013) Standard for Wrought Copper and Copper Alloy Solder Joint Pressure Fittings

ASME B16.26	(2013) Standard for Cast Copper Alloy Fittings for Flared Copper Tubes
ASME B16.3	(2011) Malleable Iron Threaded Fittings, Classes 150 and 300
ASME B16.39	(2009) Standard for Malleable Iron Threaded Pipe Unions; Classes 150, 250, and 300
ASME B16.9	(2012) Standard for Factory-Made Wrought Steel Buttwelding Fittings
ASME B31.9	(2014) Building Services Piping
ASME B40.100	(2013) Pressure Gauges and Gauge Attachments
ASME BPVC SEC IX	(2010) BPVC Section IX-Welding and Brazing Qualifications

ASTM INTERNATIONAL (ASTM)

ASTM A53/A53M	(2012) Standard Specification for Pipe, Steel, Black and Hot-Dipped, Zinc-Coated, Welded and Seamless
ASTM A653/A653M	(2013) Standard Specification for Steel Sheet, Zinc-Coated (Galvanized) or Zinc-Iron Alloy-Coated (Galvannealed) by the Hot-Dip Process
ASTM A733	(2003; E 2009; R 2009) Standard Specification for Welded and Seamless Carbon Steel and Austenitic Stainless Steel Pipe Nipples
ASTM B117	(2011) Standard Practice for Operating Salt Spray (Fog) Apparatus
ASTM B32	(2008) Standard Specification for Solder Metal
ASTM B42	(2010) Standard Specification for Seamless Copper Pipe, Standard Sizes
ASTM B62	(2009) Standard Specification for Composition Bronze or Ounce Metal Castings
ASTM B75/B75M	(2011) Standard Specification for Seamless Copper Tube
ASTM B813	(2010) Standard Specification for Liquid and Paste Fluxes for Soldering of Copper and Copper Alloy Tube
ASTM B88	(2009) Standard Specification for Seamless Copper Water Tube

ASTM D3308	(2012) PTFE Resin Skived Tape
ASTM D520	(2000; R 2011) Zinc Dust Pigment
ASTM E84	(2014) Standard Test Method for Surface Burning Characteristics of Building Materials
ASTM F1199	(1988; R 2010) Cast (All Temperatures and Pressures) and Welded Pipe Line Strainers (150 psig and 150 degrees F Maximum)

MANUFACTURERS STANDARDIZATION SOCIETY OF THE VALVE AND FITTINGS INDUSTRY (MSS)

MSS SP-110	(2010) Ball Valves Threaded, Socket-Welding, Solder Joint, Grooved and Flared Ends
MSS SP-25	(2013) Standard Marking System for Valves, Fittings, Flanges and Unions
MSS SP-58	(2009) Pipe Hangers and Supports - Materials, Design and Manufacture, Selection, Application, and Installation
MSS SP-67	(2011) Butterfly Valves
MSS SP-69	(2003; Notice 2012) Pipe Hangers and Supports - Selection and Application (ANSI Approved American National Standard)
MSS SP-71	(2011; Errata 2013) Gray Iron Swing Check Valves, Flanged and Threaded Ends
MSS SP-72	(2010a) Ball Valves with Flanged or Butt-Welding Ends for General Service
MSS SP-78	(2011) Cast Iron Plug Valves, Flanged and Threaded Ends
MSS SP-80	(2013) Bronze Gate, Globe, Angle and Check Valves

NATIONAL ELECTRICAL MANUFACTURERS ASSOCIATION (NEMA)

NEMA MG 1	(2011; Errata 2012) Motors and Generators
NEMA MG 11	(1977; R 2012) Energy Management Guide for Selection and Use of Single Phase Motors

NATIONAL FIRE PROTECTION ASSOCIATION (NFPA)

NFPA 90A	(2015) Standard for the Installation of Air Conditioning and Ventilating Systems

1.2 SYSTEM DESCRIPTION

Provide the water systems having the minimum service (design)

temperature-pressure rating indicated. Provision of the piping systems, including materials, installation, workmanship, fabrication, assembly, erection, examination, inspection, and testing shall be in accordance with the required and advisory provisions of ASME B31.9 except as modified or supplemented by this specification section or design drawings. This specification section covers the water systems piping which is located within, on, and adjacent to building(s) within the building(s) 5 foot line.

1.3 SUBMITTALS

Government approval is required for submittals with a "G" designation; submittals not having a "G" designation are for Contractor Quality Control approval. S Submit the following in accordance with Section 01 33 00.

SD-03 Product Data

Calibrated Balancing Valves

Automatic Flow Control Valves

Water Pressure Reducing Valve

Pressure Relief Valve

Combination Pressure and Temperature Relief Valves

SD-06 Test Reports

Piping welds NDE report

Pressure tests reports

Report shall be provided in bound 8-1/2 by 11 inch booklets. In the reports, document all phases of the tests performed. Include initial test summaries, all repairs/adjustments made, and the final test results.

SD-07 Certificates

Employer's Record Documents (For Welding)

Welding Procedures and Qualifications

Certificates shall be submitted showing conformance with the referenced standards contained in this section.

SD-08 Manufacturer's Instructions

Lesson plan for the Instruction Course

SD-10 Operation and Maintenance Data

Requirements for data packages are specified Section 01 78 23 OPERATION AND MAINTENANCE DATA, except as supplemented and modified by this specification section.

Submit spare parts data for each different item of equipment specified, with operation and maintenance data packages. Include a complete list of parts and supplies, with current unit prices

and source of supply, a recommended spare parts list for 1 year of operation, and a list of the parts recommended by the manufacturer to be replaced on a routine basis.

Submit a list of qualified permanent service organizations with operation and maintenance data packages. Include service organization addresses and service area or expertise. The service organizations shall be reasonably convenient to the equipment installation and be able to render satisfactory service to the equipment on a regular and emergency basis during the warranty period of the contract.

Calibrated Balancing Valves, Data Package 3

Automatic Flow Control Valves, Data Package 3

Water Pressure Reducing Valve, Data Package 3

Pressure Relief Valve, Data Package 2

Combination Pressure and Temperature Relief Valves, Data Package 2

1.4 MODIFICATIONS TO REFERENCES

In each of the publications referred to herein, consider the advisory provisions to be mandatory, as though the word, "shall" had been substituted for "should" wherever it appears. Interpret references in these publications to the "authority having jurisdiction", or words of similar meaning, to mean the Contracting Officer.

1.4.1 Definitions

For the International Code Council (ICC) Codes referenced in the contract documents, advisory provisions shall be considered mandatory, the word "should" shall be interpreted as "shall." Reference to the "code official" shall be interpreted to mean the "Contracting Officer." For Navy owned property, references to the "owner" shall be interpreted to mean the "Contracting Officer." For leased facilities, references to the "owner" shall be interpreted to mean the "lessor." References to the "permit holder" shall be interpreted to mean the "Contractor."

1.4.2 Administrative Interpretations

For ICC Codes referenced in the contract documents, the provisions of Chapter 1, "Administrator," do not apply. These administrative requirements are covered by the applicable Federal Acquisition Regulations (FAR) included in this contract and by the authority granted to the Officer in Charge of Construction to administer the construction of this project. References in the ICC Codes to sections of Chapter 1, shall be applied appropriately by the Contracting Officer as authorized by his administrative cognizance and the FAR.

1.5 SAFETY REQUIREMENTS

Exposed moving parts, parts that produce high operating temperature, parts which may be electrically energized, and parts that may be a hazard to operating personnel shall be insulated, fully enclosed, guarded, or fitted with other types of safety devices. Safety devices shall be installed so that proper operation of equipment is not impaired.

1.6 DELIVERY, STORAGE, AND HANDLING

Protect stored items from the weather, humidity and temperature variations, dirt and dust, or other contaminants. Proper protection and care of all material both before and during installation shall be the Contractor's responsibility. Any materials found to be damaged shall be replaced at the Contractor's expense. During installation, cap piping and similar openings to keep out dirt and other foreign matter. Any porous materials found to be contaminated with mold or mildew will be replaced at the Contractor's expense. Non-porous materials found to be contaminated with mold or mildew will be disinfected and cleaned prior to installation.

1.7 PROJECT/SITE CONDITIONS

1.7.1 Verification of Dimensions

The Contractor shall become familiar with all details of the work, verify all dimensions in the field, and advise the Contracting Officer of any discrepancy before performing any work.

1.7.2 Drawings

Because of the small scale of the drawings, it is not possible to indicate all offsets, fittings, and accessories that may be required. The Contractor shall carefully investigate the plumbing, fire protection, electrical, structural and finish conditions that would affect the work to be performed and shall arrange such work accordingly, furnishing required offsets, fittings, and accessories to meet such conditions.

1.7.3 Accessibility

Install all work so that parts requiring periodic inspection, operation, maintenance, and repair are readily accessible. Install concealed valves, expansion joints, controls, dampers, and equipment requiring access, in locations freely accessible through access doors.

PART 2 PRODUCTS

2.1 STANDARD COMMERCIAL PRODUCTS

Materials and equipment shall be standard products of a manufacturer regularly engaged in the manufacturing of such products, which are of a similar material, design and workmanship. The standard products shall have been in satisfactory commercial or industrial use for 2 years prior to bid opening.

The two year use shall include applications of equipment and materials under similar circumstances and of similar size. The 2 years experience shall be satisfactorily completed by a product which has been sold or is offered for sale on the commercial market through advertisements, manufacturer's catalogs, or brochures.

Products having less than a 2 year field service record shall be acceptable if a certified record of satisfactory field operation, for not less than 6000 hours exclusive of the manufacturer's factory tests, can be shown. System components shall be environmentally suitable for the indicated locations.

The equipment items shall be supported by service organizations. These service organizations shall be reasonably convenient to the equipment installation and able to render satisfactory service to the equipment on a regular and emergency basis during the warranty period of the contract.

2.2 STEEL PIPING

Water piping shall be steel pipe or copper tubing. Provide steel piping with a ANSI/ASME Class 125 service rating, which for 150 degrees F, the pressure rating is 175 psig.

2.2.1 Pipe

Steel pipe, conform to ASTM A53/A53M, Schedule 40, Type E or S, Grades A or B. Do not use Type F pipe.

2.2.2 Fittings and End Connections (Joints)

Piping and fittings 1 inch and smaller shall have threaded connections. Piping and fittings larger than 1 inch and smaller than 3 inches shall have either threaded, grooved, or welded connections. Piping and fittings 3 inches and larger shall have grooved, welded, or flanged connections. The manufacturer of each fitting shall be permanently identified on the body of the fitting in accordance with MSS SP-25.

2.2.2.1 Threaded Connections

Use threaded valves and pipe connections conforming to ASME B1.20.1. Used threaded fitting conforming to ASME B16.3. Use threaded unions conforming to ASME B16.39. Use threaded pipe nipples conforming to ASTM A733.

2.2.2.2 Flanged Connections

Flanges shall conform to ASME B16.1, Class 125. Gaskets shall be nonasbestos compressed material in accordance with ASME B16.21, 1/16 inch thickness, full face or self-centering flat ring type. These gaskets shall contain aramid fibers bonded with styrene butadeine rubber (SBR) or nitrile butadeine rubber (NBR). Bolts, nuts, and bolt patterns shall conform to ASME B16.1.

2.2.2.3 Welded Connections

Welded valves and pipe connections (both butt-welds and socket-welds types) shall conform to ASME B31.9. Butt-welded fittings shall conform to ASME B16.9. Socket-welded fittings shall conform to ASME B16.11. Welded fittings shall be identified with the appropriate grade and marking symbol.

2.2.2.4 Dielectric Waterways and Flanges

Provide dielectric waterways with a water impervious insulation barrier capable of limiting galvanic current to 1 percent of short circuit current in a corresponding bimetallic joint. When dry, insulation barrier shall be able to withstand a 600-volt breakdown test. Provide dielectric waterways constructed of galvanized steel and have threaded end connections to match connecting piping. Dielectric waterways shall be suitable for the required operating pressures and temperatures. Provide dielectric flanges with the same pressure ratings as standard flanges and provide complete electrical isolation between connecting pipe and/or

equipment as described herein for dielectric waterways.

2.3 COPPER TUBING

Provide copper tubing and fittings with a ANSI/ASME Class 125 service rating, which for 150 degrees F., the pressure rating is 175 psig.

2.3.1 Tube

Use copper tube conforming to ASTM B88, Type L or M for aboveground tubing, and Type K for buried tubing.

2.3.2 Fittings and End Connections (Solder and Flared Joints)

Wrought copper and bronze solder joint pressure fittings, including unions ands flanges, shall conform to ASME B16.22 and ASTM B75/B75M. Provide adapters as required. Cast copper alloy solder-joint pressure fittings , including unions and flanges, shall conform to ASME B16.18. Cast copper alloy fittings for flared copper tube shall conform to ASME B16.26 and ASTM B62. ASTM B42 copper pipe nipples with threaded end connections shall conform to ASTM B42.

Copper tubing of sizes larger than 4 inches shall have brazed joints.Brass or bronze adapters for brazed tubing may be used for connecting tubing to flanges and to threaded ends of valves and equipment.

Extracted brazed tee joints may be used if produced with an acceptable tool and installed in accordance with tool manufacturer's written procedures.

2.3.3 Solder

Provide solder in conformance with ASTM B32, grade Sb5, tin-antimony alloy. Solder flux shall be liquid or paste form, non-corrosive and conform to ASTM B813.

2.3.4 Brazing Filler Metal

Filler metal shall conform to AWS A5.8/A5.8M, Type BAg-5 with AWS Type 3 flux, except Type BCuP-5 or BCuP-6 may be used for brazing copper-to-copper joints.

2.4 VALVES

Provide valves with a ANSI/ASME Class 125 service rating, which for 150 degrees F, the pressure rating is 175 psig.

Valves in sizes larger than 1 inch and used on steel pipe systems, may be provided with rigid grooved mechanical joint ends. Such grooved end valves shall be subject to the same requirements as rigid grooved mechanical joints and fittings and, shall be furnished by the same manufacturer as the grooved pipe joint and fitting system.

2.4.1 Check Valve

Check valves 2-1/2 inches and smaller shall conform to MSS SP-80. Check valves 3 inches and larger shall conform to MSS SP-71, Class 125.

2.4.2 Butterfly Valve

Butterfly valves shall conform to MSS SP-67, Type 1 and shall be either the wafer or lug type. Valves smaller than 8 inches shall have throttling handles with a minimum of seven locking positions. Valves 8 inches and larger shall have totally enclosed manual gear operators with adjustable balance return stops and position indicators.

2.4.3 Plug Valve

Plug valves 2 inches and larger shall conform to MSS SP-78, have flanged or threaded ends, and have cast iron bodies with bronze trim. Valves 2 inches and smaller shall be bronze with NPT connections for black steel pipe and brazed connections for copper tubing. Valve shall be lubricated, non-lubricated, or tetrafluoroethylene resin-coated type. Valve shall be resilient, double seated, trunnion mounted with tapered lift plug capable of 2-way shutoff. Valve shall operate from fully open to fully closed by rotation of the handwheel to lift and turn the plug. Valve shall a weatherproof operators with mechanical position indicators. Valves 8 inches or larger shall be provided with manual gear operators with position indicators.

2.4.4 Ball Valve

Full port design. Ball valves 1/2 inch and larger shall conform to MSS SP-72 or MSS SP-110 and shall be cast iron or bronze with threaded, soldered, or flanged ends. Valves 8 inches or larger shall be provided with manual gear operators with position indicators. Ball valves may be provided in lieu of gate valves.

2.4.5 Square Head Cocks

Provide copper alloy or cast-iron body with copper alloy plugs, suitable for 125 psig water working pressure.

2.4.6 Calibrated Balancing Valves

Copper alloy or cast iron body, copper alloy or stainless internal working parts. Provide valve calibrated so that flow can be determined when the temperature and pressure differential across valve is known. Valve shall have an integral pointer which registers the degree of valve opening. Valve shall function as a service valve when in fully closed position. Valve shall be constructed with internal seals to prevent leakage and shall be supplied with preformed insulation.

Provide valve bodies with tapped openings and pipe extensions with positive shutoff valves outside of pipe insulation. The pipe extensions shall be provided with quick connecting hose fittings for a portable differential pressure meter connections to verify the pressure differential. Provide metal tag on each valve showing the gallons per minute flow for each differential pressure reading.

2.4.7 Automatic Flow Control Valves

Valve shall automatically maintain the constant flow indicated on the design drawings. Valve shall modulate by sensing the pressure differential across the valve body. Valve shall be selected for the flow required and provided with a permanent nameplate or tag carrying a permanent record of the factory-determined flow rate and flow control

pressure levels. Provide valve that controls the flow within 5 percent of the tag rating. Valve materials shall be the same as specified for the ball or plug valves.

Provide valve that are pneumatic type as indicated. Valve shall be capable of positive shutoff against the system pump head, valve bodies shall be provided with tapped openings and pipe extensions with shutoff valves outside of pipe insulation. The pipe extensions shall be provided with quick connecting hose fittings and differential meter, suitable for the operating pressure specified. Provide the meter complete with hoses, vent, integral metering connections, and carrying case as recommended by the valve manufacturer.

2.4.8 Water Pressure Reducing Valve

Valve, ASSE 1003 for water service, copper alloy body.

2.4.9 Pressure Relief Valve

Valve shall prevent excessive pressure in the piping system when the piping system reaches its maximum heat buildup. Valve, ANSI Z21.22/CSA 4.4 and shall have cast iron bodies with corrosion resistant internal working parts. The discharge pipe from the relief valve shall be the size of the valve outlet unless otherwise indicated.

2.4.10 Combination Pressure and Temperature Relief Valves

ANSI Z21.22/CSA 4.4, copper alloy body, automatic re-seating, test lever, and discharge capacity based on AGA temperature steam rating.

2.4.11 Float Valve

Angle patternor Globe pattern. Valve bodies 3 inches nominal pipe size and smaller shall be bronze. Valve bodies larger than 3 inches shall be cast iron or bronze. Steel parts shall be corrosion resistant. Where float rods are extended for tank applications, extension shall be properly supported and guided to avoid bending of float rod or stressing of valve pilot linkage.

2.4.12 Drain Valves

Valves, MSS SP-80 gate valves. Valve shall be manually-operated, 3/4 inch pipe size and above with a threaded end connection. Provide valve with a water hose nipple adapter. Freeze-proof type valves shall be provided in installations exposed to freezing temperatures.

2.4.13 Air Venting Valves

Manually-operated general service type air venting valves, brass or bronze valves that are furnished with threaded plugs or caps. Automatic type air venting shall be the ball-float type with brass/bronze or brass bodies, 300 series corrosion-resistant steel float, linkage and removable seat. Air venting valves on water coils shall have not less than 1/8 inch threaded end connections. Air venting valves on water mains shall have not less than 3/4 inch threaded end connections. Air venting valves on all other applications shall have not less than 1/2 inch threaded end connections.

2.4.14 Vacuum Relief Valves

ANSI Z21.22/CSA 4.4

2.5 PIPING ACCESSORIES

2.5.1 Strainer

Strainer, ASTM F1199, except as modified and supplemented in this specification. Strainer shall be the cleanable, basket or "Y" type, the same size as the pipeline. Strainer bodies shall be fabricated of cast iron with bottoms drilled, and tapped. Provide blowoff outlet with pipe nipple, gate valve, and discharge pipe nipple. The bodies shall have arrows clearly cast on the sides indicating the direction of flow.

Provide strainer with removable cover and sediment screen. The screen shall be made of minimum 22 gauge corrosion-resistant steel, with small perforations numbering not less than 400 per square inch to provide a net free area through the basket of at least 3.30 times that of the entering pipe. The flow shall be into the screen and out through the perforations.

2.5.2 Cyclonic Separator

Metal- bodied, with removal capability of removing solids 45 microns/325 mesh in size and heavier than 1.20 specific gravity, maximum pressure drop of 5 psid, with cleanout connection.

2.5.3 Flexible Pipe Connectors

Provide flexible bronze or stainless steel piping connectors with single braid. Equip flanged assemblies with limit bolts to restrict maximum travel to the manufacturer's standard limits. Unless otherwise indicated, the length of the flexible connectors shall be as recommended by the manufacturer for the service intended. Internal sleeves or liners, compatible with circulating medium, shall be provided when recommended by the manufacturer. Provide covers to protect the bellows where indicated.

2.5.4 Pressure and Vacuum Gauges

Gauges, ASME B40.100 with throttling type needle valve or a pulsation dampener and shut-off valve. Provide gauges with 4.5 inch dial, brass or aluminum case, bronze tube, and siphon. Gauge shall have a range from 0 psig to approximately 1.5 times the maximum system working pressure. Each gauge range shall be selected so that at normal operating pressure, the needle is within the middle-third of the range.

2.5.5 Temperature Gauges

Temperature gauges, shall be the industrial duty type and be provided for the required temperature range. Provide gauges with fixed thread connection, dial face gasketed within the case; and an accuracy within 2 percent of scale range. Gauges shall have Fahrenheit scale in 2 degree graduations scale (black numbers) on a white face. The pointer shall be adjustable. Rigid stem type temperature gauges shall be provided in thermal wells located within 5 feet of the finished floor. Universal adjustable angle type or remote element type temperature gauges shall be provided in thermal wells located 5 to 7 feet above the finished floor or in locations indicated. Remote element type temperature gauges shall be provided in thermal wells located 7 feet above the finished floor or in

locations indicated.

2.5.5.1 Stem Cased-Glass

Stem cased-glass case shall be polished stainless steel or cast aluminum, 9 inches long, with clear acrylic lens, and non-mercury filled glass tube with indicating-fluid column.

2.5.5.2 Bimetallic Dial

Bimetallic dial type case shall be not less than 3-1/2 inches, stainless steel, and shall be hermetically sealed with clear acrylic lens. Bimetallic element shall be silicone dampened and unit fitted with external calibrator adjustment.

2.5.5.3 Liquid-, Solid-, and Vapor-Filled Dial

Liquid-, solid-, and vapor-filled dial type cases shall be not less than 3-1/2 inches, stainless steel or cast aluminum with clear acrylic lens. Fill shall be nonmercury, suitable for encountered cross-ambients, and connecting capillary tubing shall be double-braided bronze.

2.5.5.4 Thermal Well

Thermal well shall be identical size, 1/2 or 3/4 inch NPT connection, brass or stainless steel. Where test wells are indicated, provide captive plug-fitted type 1/2 inch NPT connection suitable for use with either engraved stem or standard separable socket thermometer or thermostat. Mercury shall not be used in thermometers. Extended neck thermal wells shall be of sufficient length to clear insulation thickness by 1 inch.

2.5.6 Pipe Hangers, Inserts, and Supports

Pipe hangers, inserts, guides, and supports: to MSS SP-58 and MSS SP-69.

2.5.7 Escutcheons

Provide one piece or split hinge metal plates for piping entering floors, walls, and ceilings in exposed spaces. Secure plates in place by internal spring tension or set screws. Provide polished stainless steel plates or chromium-plated finish on copper alloy plates in finished spaces. Provide paint finish on metal plates in unfinished spaces.

2.6 ELECTRICAL WORK

Provide motors, controllers, integral disconnects, contactors, and controls with their respective pieces of equipment, except controllers indicated as part of motor control centers. Provide electrical equipment, including motors and wiring, as specified in Section 26 20 00 INTERIOR DISTRIBUTION SYSTEM. Manual or automatic control and protective or signal devices required for the operation specified and control wiring required for controls and devices specified, but not shown, shall be provided. For packaged equipment, the manufacturer shall provide controllers including the required monitors and timed restart.

Provide high efficiency type, single-phase, fractional-horsepower alternating-current motors, including motors that are part of a system, in accordance with NEMA MG 11.

Provide polyphase, squirrel-cage medium induction motors, including motors that are part of a system, that meet the efficiency ratings for premium efficiency motors in accordance with NEMA MG 1. Provide motors in accordance with NEMA MG 1 and of sufficient size to drive the load at the specified capacity without exceeding the nameplate rating of the motor.

Motors shall be rated for continuous duty with the enclosure specified. Motor duty requirements shall allow for maximum frequency start-stop operation and minimum encountered interval between start and stop. Motor torque shall be capable of accelerating the connected load within 20 seconds with 80 percent of the rated voltage maintained at motor terminals during one starting period. Provide motor starters complete with thermal overload protection and other necessary appurtenances. Motor bearings shall be fitted with grease supply fittings and grease relief to outside of the enclosure.

2.7 PAINTING OF NEW EQUIPMENT

New equipment painting shall be factory applied or shop applied, and shall be as specified herein, and provided under each individual section.

2.7.1 Factory Painting Systems

Manufacturer's standard factory painting systems may be provided. The factory painting system applied will withstand 125 hours in a salt-spray fog test, except that equipment located outdoors shall withstand 500 hours in a salt-spray fog test.

Salt-spray fog test shall be in accordance with ASTM B117, and for that test, the acceptance criteria shall be as follows: immediately after completion of the test, the paint shall show no signs of blistering, wrinkling, or cracking, and no loss of 0.125 inch on either side of the scratch mark. The film thickness of the factory painting system applied on the equipment shall not be less than the film thickness used on the test specimen.

If manufacturer's standard factory painting system is being proposed for use on surfaces subject to temperatures above 120 degrees F, the factory painting system shall be designed for the temperature service.

2.7.2 Shop Painting Systems for Metal Surfaces

Clean, retreat, prime and paint metal surfaces; except aluminum surfaces need not be painted. Apply coatings to clean dry surfaces. Clean the surfaces to remove dust, dirt, rust, oil and grease by wire brushing and solvent degreasing prior to application of paint, except metal surfaces subject to temperatures in excess of 120 degrees F shall be cleaned to bare metal.

Where hot-dip galvanized steel has been cut, resulting surfaces with no galvanizing shall be coated with a zinc-rich coating conforming to ASTM D520, Type I.

Where more than one coat of paint is specified, apply the second coat after the preceding coat is thoroughly dry. Lightly sand damaged painting and retouch before applying the succeeding coat. Color of finish coat shall be aluminum or light gray.

a. Temperatures Less Than 120 Degrees F: Immediately after cleaning, the

metal surfaces subject to temperatures less than 120 degrees F shall receive one coat of pretreatment primer applied to a minimum dry film thickness of 0.3 mil, one coat of primer applied to a minimum dry film thickness of one mil; and two coats of enamel applied to a minimum dry film thickness of one mil per coat.

b. Temperatures Between 120 and 400 degrees F: Metal surfaces subject to temperatures between 120 and 400 degrees F shall receive two coats of 400 degrees F heat-resisting enamel applied to a total minimum thickness of 2 mils.

c. Temperatures Greater Than 400 degrees F: Metal surfaces subject to temperatures greater than 400 degrees F shall receive two coats of 600 degrees F heat-resisting paint applied to a total minimum dry film thickness of 2 mils.

2.8 FACTORY APPLIED INSULATION

Factory insulated items installed outdoors are not required to be fire-rated. As a minimum, factory insulated items installed indoors shall have a flame spread index no higher than 75 and a smoke developed index no higher than 150. Factory insulated items (no jacket) installed indoors and which are located in air plenums, in ceiling spaces, and in attic spaces shall have a flame spread index no higher than 25 and a smoke developed index no higher than 50. Flame spread and smoke developed indexes shall be determined by ASTM E84.

Insulation shall be tested in the same density and installed thickness as the material to be used in the actual construction. Material supplied by a manufacturer with a jacket shall be tested as a composite material. Jackets, facings, and adhesives shall have a flame spread index no higher than 25 and a smoke developed index no higher than 50 when tested in accordance with ASTM E84.

2.9 NAMEPLATES

Major equipment including pumps, pump motors, expansion tanks, and air separator tanks shall have the manufacturer's name, type or style, model or serial number on a plate secured to the item of equipment. The nameplate of the distributing agent will not be acceptable. Plates shall be durable and legible throughout equipment life and made of stainless steel. Plates shall be fixed in prominent locations with nonferrous screws or bolts.

2.10 RELATED COMPONENTS/SERVICES

2.10.1 Field Applied Insulation

Requirements for field applied insulation is specified in Section 23 07 00 THERMAL INSULATION FOR MECHANICAL SYSTEMS.

2.10.2 Field Applied Insulation

Requirements for field installed insulation is specified in Section 23 07 00 THERMAL INSULATION FOR MECHANICAL SYSTEMS, except as supplemented and modified by this specification section.

2.10.3 Field Painting

Requirements for painting of surfaces not otherwise specified, and finish painting of items only primed at the factory, are specified in Section 09 90 00PAINTS AND COATINGS.

PART 3 EXECUTION

3.1 INSTALLATION

Cut pipe accurately to measurements established at the jobsite, and work into place without springing or forcing, completely clearing all windows, doors, and other openings. Cutting or other weakening of the building structure to facilitate piping installation is not permitted without written approval. Cut pipe or tubing square, remove burrs by reaming, and fashion to permit free expansion and contraction without causing damage to the building structure, pipe, joints, or hangers.

Notify the Contracting Officer in writing at least 15 calendar days prior to the date the connections are required. Obtain approval before interrupting service. Furnish materials required to make connections into existing systems and perform excavating, backfilling, compacting, and other incidental labor as required. Furnish labor and tools for making actual connections to existing systems.

3.1.1 Welding

Provide welding work specified this section for piping systems in conformance with ASME B31.9, as modified and supplemented by this specification section and the accompanying drawings. The welding work includes: qualification of welding procedures, welders, welding operators, brazers, brazing operators, and nondestructive examination personnel; maintenance of welding records, and examination methods for welds.

3.1.1.1 Employer's Record Documents (For Welding)

Submit for review and approval the following documentation. This documentation and the subject qualifications shall be in compliance with ASME B31.9.

a. List of qualified welding procedures that is proposed to be used to provide the work specified in this specification section.

b. List of qualified welders, brazers, welding operators, and brazing operators that are proposed to be used to provide the work specified in this specification section.

c. List of qualified weld examination personnel that are proposed to be used to provide the work specified in this specification section.

3.1.1.2 Welding Procedures and Qualifications

a. Specifications and Test Results: Submit copies of the welding procedures specifications and procedure qualification test results for each type of welding required. Approval of any procedure does not relieve the Contractor of the responsibility for producing acceptable welds. Submit this information on the forms printed in ASME BPVC SEC IX or their equivalent.

b. Certification: Before assigning welders or welding operators to the work, submit a list of qualified welders, together with data and certification that each individual is performance qualified as specified. Do not start welding work prior to submitting welder, and welding operator qualifications. The certification shall state the type of welding and positions for which each is qualified, the code and procedure under which each is qualified, date qualified, and the firm and individual certifying the qualification tests.

3.1.1.3 Examination of Piping Welds

Conduct non-destructive examinations (NDE) on piping welds and brazing and verify the work meets the acceptance criteria specified in ASME B31.9. NDE on piping welds covered by ASME B31.9 is visual inspection only. Submit a piping welds NDE report meeting the requirements specified in ASME B31.9.

3.1.1.4 Welding Safety

Welding and cutting safety requirements shall be in accordance with AWS Z49.1.

3.1.2 Directional Changes

Make changes in direction with fittings, except that bending of pipe 4 inches and smaller is permitted, provided a pipe bender is used and wide weep bends are formed. Mitering or notching pipe or other similar construction to form elbows or tees is not permitted. The centerline radius of bends shall not be less than 6 diameters of the pipe. Bent pipe showing kinks, wrinkles, flattening, or other malformations is not acceptable.

3.1.3 Functional Requirements

Pitch horizontal supply mains down in the direction of flow as indicated. The grade shall not be less than 1 inch in 40 feet. Reducing fittings shall be used for changes in pipe sizes. Cap or plug open ends of pipelines and equipment during installation to keep dirt or other foreign materials out of the system.

Pipe not otherwise specified shall be uncoated. Connections to appliances shall be made with malleable iron unions for steel pipe 2-1/2 inches or less in diameter, and with flanges for pipe 3 inches and above in diameter. Connections between ferrous and copper piping shall be electrically isolated from each other with dielectric waterways or flanges.

Piping located in air plenums shall conform to NFPA 90A requirements. Pipe and fittings installed in inaccessible conduits or trenches under concrete floor slabs shall be welded. Equipment and piping arrangements shall fit into space allotted and allow adequate acceptable clearances for installation, replacement, entry, servicing, and maintenance. Electric isolation fittings shall be provided between dissimilar metals.

3.1.4 Fittings and End Connections

3.1.4.1 Threaded Connections

Threaded connections shall be made with tapered threads and made tight

with PTFE tape complying with ASTM D3308 or equivalent thread-joint compound applied to the male threads only. Not more than three threads shall show after the joint is made.

3.1.4.2 Brazed Connections

Brazing, AWS BRH, except as modified herein. During brazing, the pipe and fittings shall be filled with a pressure regulated inert gas, such as nitrogen, to prevent the formation of scale. Before brazing copper joints, both the outside of the tube and the inside of the fitting shall be cleaned with a wire fitting brush until the entire joint surface is bright and clean. Do not use brazing flux. Surplus brazing material shall be removed at all joints. Steel tubing joints shall be made in accordance with the manufacturer's recommendations. Piping shall be supported prior to brazing and not be sprung or forced.

3.1.4.3 Welded Connections

Branch connections shall be made with welding tees or forged welding branch outlets. Pipe shall be thoroughly cleaned of all scale and foreign matter before the piping is assembled. During welding, the pipe and fittings shall be filled with an inert gas, such as nitrogen, to prevent the formation of scale. Beveling, alignment, heat treatment, and inspection of weld shall conform to ASME B31.9. Weld defects shall be removed and rewelded at no additional cost to the Government. Electrodes shall be stored and dried in accordance with AWS D1.1/D1.1M or as recommended by the manufacturer. Electrodes that have been wetted or that have lost any of their coating shall not be used.

3.1.4.4 Flared Connections

When flared connections are used, a suitable lubricant shall be used between the back of the flare and the nut in order to avoid tearing the flare while tightening the nut.

3.1.4.5 Flanges and Unions

Except where copper tubing is used, union or flanged joints shall be provided in each line immediately preceding the connection to each piece of equipment or material requiring maintenance such as coils, pumps, control valves, and other similar items. Flanged joints shall be assembled square end tight with matched flanges, gaskets, and bolts. Gaskets shall be suitable for the intended application.

3.1.5 Valves

Isolation gate or ball valves shall be installed on each side of each piece of equipment, at the midpoint of all looped mains, and at any other points indicated or required for draining, isolating, or sectionalizing purpose. Isolation valves may be omitted where balancing cocks are installed to provide both balancing and isolation functions. Each valve except check valves shall be identified. Valves in horizontal lines shall be installed with stems horizontal or above.

3.1.6 Air Vents

Air vents shall be provided at all high points, on all water coils, and where indicated to ensure adequate venting of the piping system.

3.1.7 Drains

Drains shall be provided at all low points and where indicated to ensure complete drainage of the piping. Drains shall be accessible, and shall consist of nipples and caps or plugged tees unless otherwise indicated.

3.1.8 Flexible Pipe Connectors

Connectors shall be attached to components in strict accordance with the latest printed instructions of the manufacturer to ensure a vapor tight joint. Hangers, when required to suspend the connectors, shall be of the type recommended by the flexible pipe connector manufacturer and shall be provided at the intervals recommended.

3.1.9 Temperature Gauges

Temperature gauges shall be located on coolant supply and return piping at each heat exchanger, on condenser water piping entering and leaving a condenser, at each automatic temperature control device without an integral thermometer, and where indicated or required for proper operation of equipment. Thermal wells for insertion thermometers and thermostats shall extend beyond thermal insulation surface not less than 1 inch.

3.1.10 Pipe Hangers, Inserts, and Supports

Pipe hangers, inserts, and supports shall conform to MSS SP-58 and MSS SP-69, except as supplemented and modified in this specification section. Pipe hanger types 5, 12, and 26 shall not be used. Hangers used to support piping 2 inches and larger shall be fabricated to permit adequate adjustment after erection while still supporting the load. Piping subjected to vertical movement, when operating temperatures exceed ambient temperatures, shall be supported by variable spring hangers and supports or by constant support hangers.

3.1.10.1 Hangers

Type 3 shall not be used on insulated piping. Type 24 may be used only on trapeze hanger systems or on fabricated frames.

3.1.10.2 Inserts

Type 18 inserts shall be secured to concrete forms before concrete is placed. Continuous inserts which allow more adjustments may be used if they otherwise meet the requirements for Type 18 inserts.

3.1.10.3 C-Clamps

Type 19 and 23 C-clamps shall be torqued per MSS SP-69 and have both locknuts and retaining devices, furnished by the manufacturer. Field-fabricated C-clamp bodies or retaining devices are not acceptable.

3.1.10.4 Angle Attachments

Type 20 attachments used on angles and channels shall be furnished with an added malleable-iron heel plate or adapter.

3.1.10.5 Saddles and Shields

Where Type 39 saddle or Type 40 shield are permitted for a particular pipe

attachment application, the Type 39 saddle, connected to the pipe, shall be used on all pipe 4 inches and larger when the temperature of the medium is 60 degrees F or higher. Type 40 shields shall be used on all piping less than 4 inches and all piping 4 inches and larger carrying medium less than 60 degrees F. A high density insulation insert of cellular glass shall be used under the Type 40 shield for piping 2 inches and larger.

3.1.10.6 Horizontal Pipe Supports

Horizontal pipe supports shall be spaced as specified in MSS SP-69 and a support shall be installed not over 1 foot from the pipe fitting joint at each change in direction of the piping. Pipe supports shall be spaced not over 5 feet apart at valves. Pipe hanger loads suspended from steel joist with hanger loads between panel points in excess of 50 pounds shall have the excess hanger loads suspended from panel points.

3.1.10.7 Vertical Pipe Supports

Vertical pipe shall be supported at each floor, except at slab-on-grade, and at intervals of not more than 15 feet, not more than 8 feet from end of risers, and at vent terminations.

3.1.10.8 Pipe Guides

Type 35 guides using, steel, reinforced polytetrafluoroethylene (PTFE) or graphite slides shall be provided where required to allow longitudinal pipe movement. Lateral restraints shall be provided as required. Slide materials shall be suitable for the system operating temperatures, atmospheric conditions, and bearing loads encountered.

3.1.10.9 Steel Slides

Where steel slides do not require provisions for restraint of lateral movement, an alternate guide method may be used. On piping 4 inches and larger, a Type 39 saddle shall be used. On piping under 4 inches, a Type 40 protection shield may be attached to the pipe or insulation and freely rest on a steel slide plate.

3.1.10.10 Multiple Pipe Runs

In the support of multiple pipe runs on a common base member, a clip or clamp shall be used where each pipe crosses the base support member. Spacing of the base support members shall not exceed the hanger and support spacing required for an individual pipe in the multiple pipe run.

3.1.10.11 Seismic Requirements

. Structural steel required for reinforcement to properly support piping, headers, and equipment but not shown shall be provided under this section.

3.1.10.12 Structural Attachments

Attachment to building structure concrete and masonry shall be by cast-in concrete inserts, built-in anchors, or masonry anchor devices. Inserts and anchors shall be applied with a safety factor not less than 5. Supports shall not be attached to metal decking. Supports shall not be attached to the underside of concrete filled floors or concrete roof decks unless approved by the Contracting Officer. Masonry anchors for overhead

applications shall be constructed of ferrous materials only. Structural steel brackets required to support piping, headers, and equipment, but not shown, shall be provided under this section.

3.1.11 Pipe Alignment Guides

Pipe alignment guides shall be provided where indicated for expansion loops, offsets, and bends and as recommended by the manufacturer for expansion joints, not to exceed 5 feet on each side of each expansion joint, and in lines 4 inches or smaller not more than 2 feet on each side of the joint.

3.1.12 Pipe Anchors

Anchors shall be provided where indicated. Unless indicated otherwise, anchors shall comply with the requirements specified. Anchors shall consist of heavy steel collars with lugs and bolts for clamping and attaching anchor braces, unless otherwise indicated. Anchor braces shall be installed in the most effective manner to secure the desired results using turnbuckles where required.

Supports, anchors, or stays shall not be attached where they will injure the structure or adjacent construction during installation or by the weight of expansion of the pipeline. Where pipe and conduit penetrations of vapor barrier sealed surfaces occur, these items shall be anchored immediately adjacent to each penetrated surface, to provide essentially zero movement within penetration seal.

3.1.13 Building Surface Penetrations

Sleeves shall not be installed in structural members except where indicated or approved. Except as indicated otherwise piping sleeves shall comply with requirements specified. Sleeves in nonload bearing surfaces shall be galvanized sheet metal, conforming to ASTM A653/A653M, Coating Class G-90, 20 gauge. Sleeves in load bearing surfaces shall be uncoated carbon steel pipe, conforming to ASTM A53/A53M, Standard weight. Sealants shall be applied to moisture and oil-free surfaces and elastomers to not less than 1/2 inch depth. Sleeves shall not be installed in structural members.

3.1.13.1 Refrigerated Space

Refrigerated space building surface penetrations shall be fitted with sleeves fabricated from hand-lay-up or helically wound, fibrous glass reinforced polyester or epoxy resin with a minimum thickness equal to equivalent size Schedule 40 steel pipe. Sleeves shall be constructed with integral collar or cold side shall be fitted with a bonded slip-on flange or extended collar.

In the case of masonry penetrations where sleeve is not cast-in, voids shall be filled with latex mixed mortar cast to shape of sleeve and flange/external collar type sleeve shall be assembled with butyl elastomer vapor barrier sealant through penetration to cold side surface vapor barrier overlap and fastened to surface with masonry anchors.

Integral cast-in collar type sleeve shall be flashed with not less than 4 inches of cold side vapor barrier overlap of sleeve surface. Normally noninsulated penetrating round surfaces shall be sealed to sleeve bore with mechanically expandable seals in vapor tight manner and remaining

warm and cold side sleeve depth shall be insulated with not less than 4 inches of foamed-in-place rigid polyurethane or foamed-in-place silicone elastomer.

Vapor barrier sealant shall be applied to finish warm side insulation surface. Warm side of penetrating surface shall be insulated beyond vapor barrier sealed sleeve insulation for a distance which prevents condensation. Wires in refrigerated space surface penetrating conduit shall be sealed with vapor barrier plugs or compound to prevent moisture migration through conduit and condensation therein.

3.1.13.2 Waterproof Penetrations

Pipes passing through roof or floor waterproofing membrane shall be installed through a .17 ounce copper sleeve, or a 0.032 inch thick aluminum sleeve, each within an integral skirt or flange.

Flashing sleeve shall be suitably formed, and skirt or flange shall extend not less than 8 inches from the pipe and be set over the roof or floor membrane in a troweled coating of bituminous cement. The flashing sleeve shall extend up the pipe a minimum of 2 inches above the roof or floor penetration. The annular space between the flashing sleeve and the bare pipe or between the flashing sleeve and the metal-jacket-covered insulation shall be sealed as indicated. Penetrations shall be sealed by either one of the following methods.

a. Waterproofing Clamping Flange: Pipes up to and including 10 inches in diameter passing through roof or floor waterproofing membrane may be installed through a cast iron sleeve with caulking recess, anchor lugs, flashing clamp device, and pressure ring with brass bolts. Waterproofing membrane shall be clamped into place and sealant shall be placed in the caulking recess.

b. Modular Mechanical Type Sealing Assembly: In lieu of a waterproofing clamping flange, a modular mechanical type sealing assembly may be installed. Seals shall consist of interlocking synthetic rubber links shaped to continuously fill the annular space between the pipe/conduit and sleeve with corrosion protected carbon steel bolts, nuts, and pressure plates. Links shall be loosely assembled with bolts to form a continuous rubber belt around the pipe with a pressure plate under each bolt head and each nut.

   After the seal assembly is properly positioned in the sleeve, tightening of the bolt shall cause the rubber sealing elements to expand and provide a watertight seal rubber sealing elements to expand and provide a watertight seal between the pipe/conduit seal between the pipe/conduit and the sleeve. Each seal assembly shall be sized as recommended by the manufacturer to fit the pipe/conduit and sleeve involved. The Contractor electing to use the modular mechanical type seals shall provide sleeves of the proper diameters.

3.1.13.3 Escutcheons

Finished surfaces where exposed piping, bare or insulated, pass through floors, walls, or ceilings, except in boiler, utility, or equipment rooms, shall be provided with escutcheons. Where sleeves project slightly from floors, special deep-type escutcheons shall be used. Escutcheon shall be secured to pipe or pipe covering.

3.1.14 Access Panels

Access panels shall be provided where indicated for all concealed valves, vents, controls, and additionally for items requiring inspection or maintenance. Access panels shall be of sufficient size and located so that the concealed items may be serviced and maintained or completely removed and replaced. Access panels shall be as specified in.

3.2 ELECTRICAL INSTALLATION

Install electrical equipment in accordance with NFPA 70 and manufacturers instructions.

3.3 CLEANING AND ADJUSTING

Pipes shall be cleaned free of scale and thoroughly flushed of all foreign matter. A temporary bypass shall be provided for all water coils to prevent flushing water from passing through coils. Strainers and valves shall be thoroughly cleaned. Prior to testing and balancing, air shall be removed from all water systems by operating the air vents. Temporary measures, such as piping the overflow from vents to a collecting vessel shall be taken to avoid water damage during the venting process. Air vents shall be plugged or capped after the system has been vented. Control valves and other miscellaneous equipment requiring adjustment shall be adjusted to setting indicated or directed.

3.4 FIELD TESTS

Field tests shall be conducted in the presence of the QC Manager or his designated representative to verify systems compliance with specifications. Any material, equipment, instruments, and personnel required for the test shall be provided by the Contractor.

3.4.1 Equipment and Component Isolation

Prior to testing, equipment and components that cannot withstand the tests shall be properly isolated.

3.4.2 Pressure Tests

Each piping system , except for polypropylene piping, shall be hydrostatically tested at a pressure not less than 150% working pressure for period of time sufficient to inspect every joint in the system and in no case less than 2 hours. Test pressure shall be monitored by a currently calibrated test pressure gauge. Leaks shall be repaired and piping retested until test requirements are met. No leakage or reduction in gage pressure shall be allowed.

Leaks shall be repaired by rewelding or replacing pipe or fittings. Caulking of joints will not be permitted. Concealed and insulated piping shall be tested in place before concealing.

Submit for approval pressure tests reports covering the above specified piping pressure tests; describe the systems tested, test results, defects found and repaired, and signature of the pressure tests' director. Obtain approval from the QC Manager before concealing piping or applying insulation to tested and accepted piping.

3.4.3 Related Field Inspections and Testing

3.4.3.1 Piping Welds

Examination of Piping Welds is specified in the paragraph above entitled "Examination of Piping Welds".

3.4.3.2 HVAC TAB

Requirements for testing, adjusting, and balancing (TAB) of HVAC water piping, and associated equipment is specified in Section 23 05 93 TESTING,ADJUSTING, AND BALANCING FOR HVAC. Coordinate with the TAB team, and provide support personnel and equipment as specified in Section 23 05 93 TESTING, ADJUSTING AND BALANCING FOR HVAC to assist TAB team to meet the TAB work requirements.

3.5 INSTRUCTION TO GOVERNMENT PERSONNEL

Furnish the services of competent instructors to give full instruction to the designated Government personnel in the adjustment, operation, and maintenance, including pertinent safety requirements, of the chilled water, . Instructors shall be thoroughly familiar with all parts of the installation and shall be instructed in operating theory as well as practical operation and maintenance work. Submit a lesson plan for the instruction course for approval. The lesson plan and instruction course shall be based on the approved operation and maintenance data and maintenance manuals.

Conduct a training course for the operating staff and maintenance staff selected by the Contracting Officer. Give the instruction during the first regular work week after the equipment or system has been accepted and turned over to the Government for regular operation. The number of man-days (8 hours per day) of instruction furnished shall be one man-day.. Use approximately half of the time for classroom instruction and the other time for instruction at the location of equipment or system.

When significant changes or modifications in the equipment or system are made under the terms of the contract, provide additional instruction to acquaint the operating personnel with the changes or modifications.

-- End of Section --

SECTION 23 81 00.00 20

UNITARY AIR CONDITIONING EQUIPMENT
11/09

PART 1 GENERAL

1.1 REFERENCES

The publications listed below form a part of this specification to the extent referenced. The publications are referred to within the text by the basic designation only.

AIR-CONDITIONING, HEATING AND REFRIGERATION INSTITUTE (AHRI)

AHRI 350	(2008) Sound Rating of Non-Ducted Indoor Air-Conditioning Equipment
AHRI DCAACP	(Online) Directory of Certified Applied Air-Conditioning Products
AHRI DCUP	(Online) Directory of Certified Unitary Products
ANSI/AHRI 210/240	(2008; Add 1 2011; Add 2 2012) Performance Rating of Unitary Air-Conditioning & Air-Source Heat Pump Equipment
ANSI/AHRI 340/360	(2007) Performance Rating of Commercial and Industrial Unitary Air-Conditioning and Heat Pump Equipment
ANSI/AHRI/CSA 310/380	(2004) Standard for Packaged Terminal Air-Conditioners and Heat Pumps

AMERICAN SOCIETY OF HEATING, REFRIGERATING AND AIR-CONDITIONING ENGINEERS (ASHRAE)

ANSI/ASHRAE 15 & 34	(2013; Addenda A 2014; ERTA 2014) ANSI/ASHRAE Standard 15-Safety Standard for Refrigeration Systems and ANSI/ASHRAE Standard 34-Designation and Safety Classification of Refrigerants
ASHRAE 52.2	(2012; Errata 2013) Method of Testing General Ventilation Air-Cleaning Devices for Removal Efficiency by Particle Size
ASHRAE 55	(2013; ERTA 2014) Thermal Environmental Conditions for Human Occupancy
ASHRAE 62.1	(2010; Errata 2011; INT 3 2012; INT 4 2012; INT 5 2013) Ventilation for Acceptable Indoor Air Quality
ASHRAE 90.1 - IP	(2010; ERTA 2011-2013) Energy Standard for Buildings Except Low-Rise Residential Buildings

AMERICAN WELDING SOCIETY (AWS)

AWS A5.8/A5.8M	(2011; Amendment 2012) Specification for Filler Metals for Brazing and Braze Welding

ASME INTERNATIONAL (ASME)

ASME B16.22	(2013) Standard for Wrought Copper and Copper Alloy Solder Joint Pressure Fittings
ASME B31.5	(2013) Refrigeration Piping and Heat Transfer Components

ASTM INTERNATIONAL (ASTM)

ASTM A123/A123M	(2013) Standard Specification for Zinc (Hot-Dip Galvanized) Coatings on Iron and Steel Products
ASTM B117	(2011) Standard Practice for Operating Salt Spray (Fog) Apparatus
ASTM B280	(2013) Standard Specification for Seamless Copper Tube for Air Conditioning and Refrigeration Field Service
ASTM B88	(2009) Standard Specification for Seamless Copper Water Tube
ASTM C534/C534M	(2014) Standard Specification for Preformed Flexible Elastomeric Cellular Thermal Insulation in Sheet and Tubular Form
ASTM D1654	(2008) Evaluation of Painted or Coated Specimens Subjected to Corrosive Environments

MANUFACTURERS STANDARDIZATION SOCIETY OF THE VALVE AND FITTINGS INDUSTRY (MSS)

MSS SP-58	(2009) Pipe Hangers and Supports - Materials, Design and Manufacture, Selection, Application, and Installation
MSS SP-69	(2003; Notice 2012) Pipe Hangers and Supports - Selection and Application (ANSI Approved American National Standard)

NATIONAL ELECTRICAL MANUFACTURERS ASSOCIATION (NEMA)

NEMA ICS 1	(2000; R 2008; E 2010) Standard for Industrial Control and Systems: General Requirements
NEMA ICS 2	(2000; R 2005; Errata 2008) Standard for Controllers, Contactors, and Overload Relays Rated 600 V

NEMA ICS 6 (1993; R 2011) Enclosures

NEMA MG 1 (2011; Errata 2012) Motors and Generators

U.S. DEPARTMENT OF DEFENSE (DOD)

MIL-DTL-5541 (2006; Rev F) Chemical Conversion Coatings on Aluminum and Aluminum Alloys

U.S. ENVIRONMENTAL PROTECTION AGENCY (EPA)

Energy Star (1992; R 2006) Energy Star Energy Efficiency Labeling System (FEMP)

U.S. GENERAL SERVICES ADMINISTRATION (GSA)

CID A-A-50502 (Basic) Air Conditioners, (Unitary Heat Pump), Air to Air (3,000 to 300,000 BTU)

UNDERWRITERS LABORATORIES (UL)

UL 109 (1997; Reprint Aug 2013) Tube Fittings for Flammable and Combustible Fluids, Refrigeration Service, and Marine Use

UL 484 (2014; Reprint Mar 2014) Standard for Room Air Conditioners

UL 873 (2007; Reprint Aug 2013) Standard for Temperature-Indicating and -Regulating Equipment

UL 900 (2004; Reprint Feb 2012) Standard for Air Filter Units

1.2 RELATED REQUIREMENTS

Section 23 03 00.00 20 BASIC MECHANICAL MATERIALS AND METHODS, applies to this section with the additions and modifications specified herein.

1.3 SUBMITTALS

Government approval is required for submittals with a "G" designation; submittals not having a "G" designation are for Contractor Quality Control approval. Submit the following in accordance with Section 01 33 00 SUBMITTAL PROCEDURES:

SD-02 Shop Drawings

Field-assembled refrigerant piping

Control system wiring diagrams

SD-03 Product Data

Packaged terminal units

Heat pumps, air to air

Air conditioners

Submit documentation for Energy Star qualifications or meeting FEMP requirements. Indicate Energy Efficiency Rating.

Filters;

Submit documentation indicating type of biobased material in product and biobased content. Indicate relative dollar value of biobased content products to total dollar value of products included in project. Submit documentation indicating relative dollar value of rapidly renewable materials to total dollar value of products included in project.

Thermostats

Refrigerant piping and accessories

Coatings for finned tube coils

For packaged terminal units, include indoor noise rating.

Local/Regional Materials

Submit documentation indicating distance between manufacturing facility and the project site. Indicate distance of raw material origin from the project site. Indicate relative dollar value of local/regional materials to total dollar value of products included in project.

Environmental Data

SD-06 Test Reports

Salt-spray tests

Start-up and initial operational tests

SD-08 Manufacturer's Instructions

Packaged terminal units

Heat pumps, air to air

Air conditioners

Filters

Thermostats

Refrigerant piping and accessories

SD-10 Operation and Maintenance Data

Packaged terminal units, Data Package 3

Heat pumps, air to air, Data Package 3

Air conditioners, Data Package 3

Filters, Data Package 2

Thermostats, Data Package 2

Submit in accordance with Section 01 78 23 OPERATION AND MAINTENANCE DATA.

SD-11 Closeout Submittals

Posted operating instructions

1.4 QUALITY ASSURANCE

1.4.1 Modification of References

Accomplish work in accordance with the referenced publications, except as modified by this section. Consider the advisory or recommended provisions to be mandatory, as though the word "shall" had been substituted for the words "should" or "could" or "may," wherever they appear. Interpret reference to "the Authority having jurisdiction," "the Administrative Authority," "the Owner," or "the Design Engineer" to mean the Contracting Officer.

1.4.2 Detail Drawing

For refrigerant piping, submit piping, including pipe sizes. Submit control system wiring diagrams.

1.4.3 Safety

Design, manufacture, and installation of unitary air conditioning equipment shall conform to ANSI/ASHRAE 15 & 34.

1.4.4 Posted Operating Instructions

Submit posted operating instructions for each packaged air conditioning unit.

1.4.5 Sizing

Size equipment based on Design Manual CS from the Air Conditioning Contractors of America; do not oversize.

1.5 REFRIGERANTS

Refrigerants shall have an Ozone Depletion Factor (ODF) of 0.05 or less. The ODF shall be in accordance with the "Montreal Protocol On Substances That Deplete The Ozone Layer," September 1987, sponsored by the United Nations Environment Programme. CFCs and HCFCs shall not be permitted. Refrigerant shall be an approved alternative refrigerant per EPA's Significant New Alternative Policy (SNAP) listing.

1.6 ENVIRONMENTAL REQUIREMENTS

For proper Indoor Environmental Quality, maintain positive pressure within the building. Ventilation shall meet or exceed ASHRAE 62.1 and all published addenda. Meet or exceed filter media efficiency as tested in

accordance with ASHRAE 52.2. Thermal comfort shall meet or exceed ASHRAE 55.

1.7 SUSTAINABLE DESIGN REQUIREMENTS

1.7.1 Local/Regional Materials

Use materials or products extracted, harvested, or recovered, as well as manufactured, within a 500 mileradius from the project site, if available from a minimum of three sources.

1.7.2 Environmental Data

PART 2 PRODUCTS

2.1 PACKAGED TERMINAL UNITS

2.1.1 Air Conditioners

ANSI/AHRI/CSA 310/380, UL 484, air-cooled, thru-wall type, AHRI certified, and UL listed. Provide units with combination heating and cooling section with indicated capacity. Minimum energy efficiency ratio (EER) shall be in accordance with ASHRAE 90.1 - IP, at a minimum. 9.3EER. Provide units listed in AHRI DCAACP.

2.1.2 Indoor Noise Rating

Rate in accordance with AHRI 350. Indoor rating shall not exceed bels while entire unit is operating at any fan or compressor speed.

2.1.3 Refrigeration Sections

Completely self-contained, slide-in assembly or removable chassis with welded, hermetically sealed, air-cooled refrigeration system, outdoor fan, indoor fan, control box, and ventilation damper. Provide refrigeration sections capable of installation or removal without the use of tools. Refrigeration sections shall include refrigeration circuit tubing, wiring, and safety controls, and shall operate down to 35 degrees F outdoor temperature and 70 degrees F indoor temperature, without compressor short cycling while delivering not less than 100 percent of rated cooling capacity. Units shall have drains to the building exterior to eliminate excess driving rain. Condensate shall not drain onto building exterior or interior.

a. Compressors: Hermetic type with vibration isolation devices.

b. Coils: Constructed of seamless copper or aluminum tubing with copper or aluminum fins bonded to tubes. Coat outdoor air coils with factory applied corrosion resistant treatment. Coils to be coated shall be part of manufacturer's standard product for capacities and ratings indicated and specified. Provide plate type fins.

c. Outdoor Fans: Direct connected centrifugal type with aluminum or plastic wheel and forward curved blades or direct connected aluminum propeller type. Design fans so that condensate will evaporate without drip, splash, or spray on building exterior.

d. Indoor Fans: Direct connected centrifugal type with aluminum, galvanized steel, or plastic wheel and forward curved blades. Provide

minimum two-speed motor with built-in overload protection.

2.1.4 Ventilation Damper Assembly

Operated by automatic actuator. Dampers shall close on unit shutdown or loss of power and shall open on heating or cooling start-up.

2.1.5 Air Filters

Removable without use of tools, and shall filter both recirculated and ventilating air.

2.1.6 Controls

Provide controls including, an adjustable thermostat, and switches, to regulate room air temperature through control of refrigerant compressors or heating elements. Controls shall at least have positions for off, high or low fan speed for heating and cooling, and fan only operation. Provide remote mounted night set-back thermostat.

2.2 HEAT PUMPS, AIR TO AIR

List units with capacities smaller than 135,000 Btu/hr in the AHRI DCUP; in lieu of listing in the AHRI Directory, a letter of certification from AHRI that the units have been certified and will be listed in the next Directory will be acceptable. Provide factory assembled units complete with accessories, wiring, piping, and controls. Provide units with air filters as specified in the paragraph entitled "Filters."

2.2.1 Energy Performance

Energy performance shall be in accordance with CID A-A-50502. Minimum energy efficiency shall be in accordance with ASHRAE 90.1 - IP.Heat pumps shall have a minimum energy efficiency ratio (EER) of 12.5, and a minimum COP of 3.97.

2.2.2 Air Coils

Extended-surface fin and tube type with seamless copper or aluminum tubes with copper or aluminum fins securely bonded to the tubes. On coils with all-aluminum construction, provide tubes of aluminum alloy 1100, 1200, or 3102; provide fins of aluminum alloy 7072; and provide tube sheets of aluminum alloy 7072 or 5052. Provide a coating on outdoor air coils as specified in the paragraph entitled "Coatings for Finned Tube Coils." Coils to be coated shall be part of manufacturer's standard product for capacities and ratings indicated and specified. Provide plate type fins.

2.2.3 Supplemental Electric Heaters

Provide electrical resistance heaters integral with the unit . Heaters shall have a total capacity as indicated. Provide internal fusing for heaters.

2.2.4 Compressors

For compressors above 20 tons, compressor speed shall not exceed 3450 rpm. For equipment over 10 tons, provide automatic capacity reduction of at least 50 percent of rated capacity. Capacity reduction may be accomplished by cylinder unloading, use of multiple, but not more than

four compressors, or a combination of the two methods. Units with cylinder unloading shall start with capacity reduction devices in the unloaded position. Units with multiple compressors shall have a means to sequence starting of compressors. Provide compressors with devices to prevent short cycling when shutdown by safety controls. Provide reciprocating compressors with crankcase heaters, and vibration isolators.

2.2.5 Mounting Provisions

Provide units that permit mounting as indicated. Provide suitable lifting attachment plates to enable equipment to be lifted to normal position.

2.2.6 Temperature Controls

Provide controls as specified in CID A-A-50502 and as modified herein. Provide indoor thermostats of the adjustable type that conform to applicable requirements of UL 873. Provide manual means for temperature set-back. Provide thermostats capable of controlling supplemental heat as specified in CID A-A-50502. Provide a manual selector switch or other means to permit the supplementary heater to be energized when the heat pump compressor and associated equipment are inoperative. Control supplementary heater with the room thermostat while bypassing the outdoor thermostat. Locate switch adjacent to or as an integral part of the room thermostat. An indicator light on the room thermostat or manual heat switch shall indicate when supplementary heaters are operating.

2.2.7 Accessories

In addition to accessories specified in CID A-A-50502, provide the following accessories for heat pump units.

a. Protective grille around outside unit coils

2.3 AIR CONDITIONERS

2.3.1 Single Package Type

Provide factory packaged cooling combination heating and cooling units. Provide units suitable for roof top installation. Provide units with suitable lifting attachments, remote control panel , . Minimum energy efficiency shall be in accordance with ASHRAE 90.1 - IP, at a minimum. Units shall have a minimum EER of 12.2 when tested in accordance with ANSI/AHRI 210/240 or ANSI/AHRI 340/360 as applicable. List units with capacities smaller than 135,000 Btu/hr in the AHRI DCUP; in lieu of listing in the AHRI Directory, a letter of certification from AHRI that the units have been certified and will be listed in the next Directory will be acceptable. Provide capacity, electrical characteristics, and operating conditions as indicated. Condensers shall provide not less than 10 degrees F liquid subcooling at standard ratings.

2.3.2 Split-System Type

Provide separate assemblies designed to be used together. Base ratings on the use of matched assemblies. Provide performance diagrams for units with capacities not certified by AHRI to verify that components of the air conditioning system furnished will satisfy the capacity requirement specified or indicated. Minimum energy efficiency shall be in accordance with ASHRAE 90.1 - IP, at a minimum. Units shall have a minimum EER of 10.2 when tested in accordance with ANSI/AHRI 210/240 or ANSI/AHRI 340/360

as applicable. List units with capacities smaller than 135,000 Btu/hr in the AHRI DCUP; in lieu of listing in the AHRI Directory, a letter of certification from AHRI that units have been certified and will be listed in the next Directory will be acceptable. Provide capacity, electrical characteristics and operating conditions as indicated. Condensers shall provide not less than 10 degrees F liquid subcooling at standard ratings.

2.3.3 Single Zone Units

Provide single zone type units arranged to draw or blow through coil sections. Air may be blown or drawn through heating section.

2.3.4 Multizone Units

Provide multizone type units arranged to blow through the individual cooling and heating coils of each zone.

2.3.5 Compressors

For compressors over 20 tons, compressor speed shall not exceed 3450 rpm. For systems over 10 tons provide automatic capacity reduction of at least 50 percent of rated capacity. Capacity reduction may be accomplished by cylinder unloading, use of multi- or variable speed compressors, use of multiple, but not more than four compressors, or a combination of the two methods. Units with cylinder unloading shall start with capacity reduction devices in the unloaded position. Units with multiple compressors shall have means to sequence starting of compressors. Provide compressors with devices to prevent short cycling when shut down by safety controls. Device shall delay operation of compressor motor for at least 3 minutes but not more than 6 minutes. Provide a pumpdown cycle for units 20 tons and over. Provide reciprocating compressors with crankcase heaters in accordance with the manufacturer's recommendations. If compressors are paralleled, provide not less than two independent circuits.

2.3.6 Coils

On coils with all-aluminum construction, provide tubes of aluminum alloy 1100, 1200, or 3102; provide fins of aluminum alloy 7072; and provide tube sheets of aluminum alloy 7072 or 5052. Provide a separate air cooled condenser circuit for each compressor or parallel compressor installation. Provide a coating on condenser coils and fins as specified in the paragraph entitled "Coatings for Finned Tube Coils." Coils to be coated shall be part of manufacturer's standard product for capacities and ratings indicated and specified. Provide plate type fins.

2.3.7 Condenser Controls

Provide start-up and head pressure controls to allow for system operation at ambient temperatures down to 0 degrees F.

2.3.8 Fans

Provide belt-driven evaporator fans with adjustable pitch pulleys; except for units less than 5 ton capacity, direct drive with at least two speed taps may be used. Select pulleys at approximately midpoint of the adjustable range.

2.3.9 Filters

Provide filters of the type specified in this section.

2.3.10 Filter Boxes

Provide when filters are not included integral with air conditioning units. Construct of not less than No. 20 US gage steel with track, hinged access doors with latches, and gaskets between frame and filters. Arrange filters to filter outside and return air. Provide removable filter assemblies, replaceable without the use of tools.

2.3.11 Mixing Boxes

Provide of the physical size to match the basic unit and include equal sized flanged openings, sized to individually handle full air flow. Arrange openings as indicated. Provide openings with dampers of parallel or opposed blade type. Provide opposed blade type for modulating dampers and parallel type for two-position dampers. Connect damper shafts together by one continuous linkage bar. Arrange dampers for automatic operation so that when one starts to close from its opened position, the other starts to open from its closed position.

2.3.12 Thermostats

Provide adjustable type that conforms to applicable requirements of UL 873. Provide combination heating-cooling type with contacts hermetically sealed against moisture, corrosion, lint, dust, and foreign material. Design to operate on not more than 1.5 degrees Fdifferential and of suitable range calibrated in degrees F. Provide adjustable heat anticipation and fixed cooling anticipation. Provide two independent temperature sensing elements electrically connected to control the compressor and heating equipment, respectively. Accomplish manual switching for system changeover from heating to cooling or cooling to heating and fan operation through the use of a thermostat subbase. Provide system selector switches to provide "COOL" and "OFF" and "HEAT" and fan selector switches to provide "AUTOMATIC" and "ON." Provide relays, contactors, and transformers located in a panel or panels for replacement and service.

2.3.12.1 Cooling

a. When thermostat is in "COOL" position with fan selector switch in "AUTO" position, compressor, evaporator fan, and condenser fan shall cycle together.

b. When thermostat is in "COOL" position with fan selector switch in "ON" position, compressor, and condenser fan shall cycle together and evaporator fan shall run continuously.

2.3.12.2 Heating

a. When thermostat is in "HEAT" position with fan selector switch in "AUTO" position, heater and supply air fan shall cycle together. Provide a separate thermostat to keep the fan running until the heater cools.

b. When thermostat is in "HEAT" position with fan selector switch in "ON" position, heater shall cycle and supply air fan shall run continuously.

2.3.12.3 Supply Air Fan

a. When fan selector switch is in "AUTO" position with thermostat in "OFF" position, fan shall not run.

b. When fan selector switch is in "ON" position, fan shall run continuously.

2.4 FILTERS

Provide filters to filter outside air and return air and locate as indicated . Provide replaceable (throw-away) type. Filters shall conform to UL 900, Class 1 . Polyurethane filters shall not be used on units with multiframe filters. Filters shall contain a minimum of 85 percent biobased material like cotton.

2.4.1 Replaceable Type Filters

Throw-away frames and media, standard dust holding capacity, 350 fpm maximum face velocity, and one inch thick. Filters shall have a minimum efficiency reporting value (MERV) of 8 when tested in accordance with ASHRAE 52.2.

2.4.2 Cleanable Type Filters

Provide sufficient oil to coat filters six times based on one pint of oil per each 10 square feet of filter area. Provide washing and charging tanks for cleaning and coating filters. Filters shall have a MERV of 8 when tested in accordance with ASHRAE 52.2.

2.5 COATINGS FOR FINNED TUBE COILS

Where stipulated in equipment specifications of this section, coat finned tube coils of the affected equipment as specified below. Apply coating at the premises of a company specializing in such work. Degrease and prepare for coating in accordance with the coating applicator's procedures for the type of metals involved. Completed coating shall show no evidence of softening, blistering, cracking, crazing, flaking, loss of adhesion, or "bridging" between the fins.

2.5.1 Phenolic Coating

Provide a resin base thermosetting phenolic coating. Apply coating by immersion dipping of the entire coil. Provide a minimum of two coats. Bake or heat dry coils following immersions. After final immersion and prior to final baking, spray entire coil with particular emphasis given to building up coating on sheared edges. Total dry film thickness shall be 2.5 to 3.0 mils.

2.5.2 Chemical Conversion Coating with Polyelastomer Finish Coat

Dip coils in a chemical conversion solution to molecularly deposit a corrosion resistant coating by electrolysis action. Chemical conversion coatings shall conform to MIL-DTL-5541, Class 1A. Cure conversion coating at a temperature of 110 to 140 degrees F for a minimum of 3 hours. Coat coil surfaces with a complex polymer primer with a dry film thickness of 1 mil. Cure primer coat for a minimum of 1 hour. Using dip tank method, provide three coats of a complex polyelastomer finish coat. After each of the first two finish coats, cure the coils for 1 hour. Following the

third coat, spray a fog coat of an inert sealer on the coil surfaces. Total dry film thickness shall be 2.5 to 3.0 mils. Cure finish coat for a minimum of 3 hours. Coating materials shall have 300 percent flexibility, operate in temperatures of minus 50 to plus 220 degrees F, and protect against atmospheres of a pH range of 1 to 14.

2.5.3 Vinyl Coating

Apply coating using an airless fog nozzle. For each coat, make at least two passes with the nozzle. Materials to be applied are as follows:

Total dry film thickness, 6.5 mils maximum.

Vinyl Primer, 24 percent solids by volume: One coat 2 mils thick

Vinyl Copolymer, 30 percent solids by volume: One coat 4.5 mils thick.

2.6 MOTORS AND STARTERS

NEMA MG 1, NEMA ICS 1, and NEMA ICS 2. Variable speed. Motors less than 1 hp shall meet NEMA High Efficiency requirements. Motors 1 hp and larger shall meet NEMA Premium Efficiency requirements. Determine specific motor characteristics to ensure provision of correctly sized starters and overload heaters. Provide motors to operate at full capacity with a voltage variation of plus or minus 10 percent of the motor voltage rating. Motor size shall be sufficient for the duty to be performed and shall not exceed its full load nameplate current rating when driven equipment is operated at specified capacity under the most severe conditions likely to be encountered. When motor size provided differs from size indicated or specified, the Contractor shall make the necessary adjustments to the wiring, disconnect devices, and branch circuit protection to accommodate equipment actually provided. Provide weather-resistant type starter enclosures in accordance with NEMA ICS 6.

2.7 REFRIGERANT PIPING AND ACCESSORIES

Provide accessories as specified in this section. Provide suction line accumulators as recommended by equipment manufacturer's installation instructions. Provide a filter-drier in the liquid line.

2.7.1 Factory Charged Tubing

Provide extra soft, deoxidized, bright annealed copper tubing conforming to ASTM B280, factory dehydrated and furnished with a balanced charge of refrigerant recommended by manufacturer of equipment being connected. Factory insulate suction line tubing with 3/8 inchminimum thickness of closed cell, foamed plastic conforming to ASTM C534/C534M with a permeance rating not to exceed 1.0. Provide quick-connectors with caps or plugs to protect couplings. Include couplings for suction and liquid line connections of the indoor and outdoor sections.

2.7.2 Field-Assembled Refrigerant Piping

Material and dimensional requirements for field-assembled refrigerant piping, valves, fittings, and accessories shall conform to ANSI/ASHRAE 15 & 34 and ASME B31.5, except as herein specified. Factory clean, dehydrate, and seal piping before delivery to the project location. Provide seamless copper tubing, hard drawn, Type K or L, conforming to ASTM B88, except that tubing with outside diameters of 1/4

inch and 3/8 inch shall have nominal wall thickness of not less than 0.030 inch and 0.032 inch, respectively. Soft annealed copper tubing conforming to ASTM B280 may be used where flare connections to equipment are required only in nominal sizes less than one inch outside diameter.

2.7.3 Fittings

ASME B16.22 for solder-joint fittings. UL 109 for flared tube fittings.

2.7.4 Brazing Filler Material

AWS A5.8/A5.8M.

2.7.5 Pipe Hangers and Supports

MSS SP-69 and MSS SP-58, Type A, except as indicated otherwise.

2.7.6 Pipe Sleeves

Provide sleeves where piping passes through walls, floors, roofs, and partitions. Secure sleeves in proper position and location during construction. Provide sleeves of sufficient length to pass through entire thickness of walls, floors, roofs, and partitions. Provide not less than 0.25 inch space between exterior of piping or pipe insulation and interior of sleeve. Firmly pack space with insulation and caulk at both ends of the sleeve with plastic waterproof cement which will dry to a firm but pliable mass, or provide a segmented elastomeric seal.

2.7.6.1 Sleeves in Masonry and Concrete Walls, Floors, and Roofs

Provide Schedule 40 or Standard Weight zinc-coated steel pipe sleeves. Extend sleeves in floor slabs 3 inches above finished floor.

2.7.6.2 Sleeves in Partitions and Non-Masonry Structures

Provide zinc-coated steel sheet sleeves having a nominal weight of not less than 0.90 pound per square foot, in partitions and other than masonry and concrete walls, floors, and roofs.

2.8 FINISHES

Provide steel surfaces of equipment including packaged terminal units, heat pumps, and air conditioners, that do not have a zinc coating conforming to \&ASTM A123/A123M &\, or a duplex coating of zinc and paint, with a factory applied coating or paint system. Provide a coating or paint system on actual equipment identical to that on salt-spray test specimens with respect to materials, conditions of application, and dry-film thickness.

2.9 SOURCE QUALITY CONTROL

2.9.1 Salt-Spray Tests

Salt-spray test the factory-applied coating or paint system of equipment including packaged terminal units, heat pumps, and air conditioners in accordance with ASTM B117. Conduct test for 500 hours for equipment installed outdoors, or 125 hours for equipment installed indoors. Test specimens shall have a standard scribe mark as defined in ASTM D1654. Upon completion of exposure, evaluate and rate the coating or paint system

in accordance with procedures A and B of ASTM D1654. Rating of failure at the scribe mark shall not be less than six, average creepage not greater than 1/8 inch. Rating of the unscribed area shall not be less than 10, no failure.

PART 3 EXECUTION

3.1 EQUIPMENT INSTALLATION

Install equipment and components in a manner to ensure proper and sequential operation of equipment and equipment controls. Install equipment not covered in this section, or in manufacturer's instructions, as recommended by manufacturer's representative. Provide proper foundations for mounting of equipment, accessories, appurtenances, piping and controls including, but not limited to, supports, vibration isolators, stands, guides, anchors, clamps and brackets. Foundations for equipment shall conform to equipment manufacturer's recommendation, unless otherwise indicated. Set anchor bolts and sleeves using templates. Provide anchor bolts of adequate length, and provide with welded-on plates on the head end embedded in the concrete. Level equipment bases, using jacks or steel wedges, and neatly grout-in with a nonshrinking type of grouting mortar. Locate equipment to allow working space for servicing including shaft removal, disassembling compressor cylinders and pistons, replacing or adjusting drives, motors, or shaft seals, access to water heads and valves of shell and tube equipment, tube cleaning or replacement, access to automatic controls, refrigerant charging, lubrication, oil draining and working clearance under overhead lines. Provide electric isolation between dissimilar metals for the purpose of minimizing galvanic corrosion.

3.1.1 Packaged Terminal Air Conditioners and Heat Pumps

Wall sleeve installation shall provide a positive weathertight and airtight seal.

3.1.2 Unitary Air Conditioning System

Install as indicated, in accordance with requirements of ANSI/ASHRAE 15 & 34, and the manufacturer's installation and operational instructions.

3.1.3 Room Air Conditioners

Install units in accordance with manufacturer's instructions. Provide structural mountings, closures, and seals for weathertight assembly. Pitch unit as recommended by manufacturer to ensure condensate drain to drain pan without overflow.

3.2 PIPING

Brazing, bending, forming and assembly of refrigerant piping shall conform to ASME B31.5.

3.2.1 Pipe Hangers and Supports

Design and fabrication of pipe hangers, supports, and welding attachments shall conform to MSS SP-58. Installation of hanger types and supports for bare and covered pipes shall conform to MSS SP-69 for the system temperature range. Unless otherwise indicated, horizontal and vertical piping attachments shall conform to MSS SP-58.

3.2.2 Refrigerant Piping

Cut pipe to measurements established at the site and work into place without springing or forcing. Install piping with sufficient flexibility to provide for expansion and contraction due to temperature fluctuation. Where pipe passes through building structure pipe joints shall not be concealed, but shall be located where they may be readily inspected. Install piping to be insulated with sufficient clearance to permit application of insulation. Install piping as indicated and detailed, to avoid interference with other piping, conduit, or equipment. Except where specifically indicated otherwise, run piping plumb and straight and parallel to walls and ceilings. Trapping of lines will not be permitted except where indicated. Provide sleeves of suitable size for lines passing through building structure. Braze refrigerant piping with silver solder complying with AWS A5.8/A5.8M. Inside of tubing and fittings shall be free of flux. Clean parts to be jointed with emery cloth and keep hot until solder has penetrated full depth of fitting and extra flux has been expelled. Cool joints in air and remove flame marks and traces of flux. During brazing operation, prevent oxide film from forming on inside of tubing by slowly flowing dry nitrogen through tubing to expel air. Make provisions to automatically return oil on halocarbon systems. Installation of piping shall comply with ASME B31.5.

3.2.3 Returning Oil From Refrigerant System

Install refrigerant lines so that gas velocity in the evaporator suction line is sufficient to move oil along with gas to the compressor. Where equipment location requires vertical risers, line shall be sized to maintain sufficient velocity to lift oil at minimum system loading and corresponding reduction of gas volume. Install a double riser when excess velocity and pressure drop would result from full system loading. Larger riser shall have a trap, of minimum volume, obtained by use of 90- and 45-degree ells. Arrange small riser with inlet close to bottom of horizontal line, and connect to top of upper horizontal line. Do not install valves in risers.

3.2.4 Refrigerant Driers, Sight Glass Indicators, and Strainers

Provide refrigerant driers, sight glass liquid indicators, and strainers in refrigerant piping in accordance with and this section when not furnished by the manufacturer as part of the equipment. Install driers in liquid line with service valves and valved bypass line the same size as liquid line in which dryer is installed. Size of driers shall be determined by piping and installation of the unit on location. Install dryers of 50 cubic inches and larger vertically with the cover for removing cartridge at the bottom. Install moisture indicators in the liquid line downstream of the drier. Indicator connections shall be the same size as the liquid line in which it is installed.

3.2.5 Strainer Locations and Installation

Locate strainers close to equipment they are to protect. Provide a strainer in common refrigerant liquid supply to two or more thermal valves in parallel when each thermal valve has a built-in strainer. Install strainers with screen down and in direction of flow as indicated on strainer's body.

3.2.6 Solenoid Valve Installation

Install solenoid valves in horizontal lines with stem vertical and with flow in direction indicated on valve. If not incorporated as integral part of the valve, provide a strainer upstream of the solenoid valve. Provide service valves upstream of the solenoid valve, upstream of the strainer, and downstream of the solenoid valve. Remove the internal parts of the solenoid valve when brazing the valve.

3.3 ACCESS PANELS

Provide access panels for concealed valves, controls, dampers, and other fittings requiring inspection and maintenance.

3.4 AIR FILTERS

Allow access space for servicing filters. Install filters with suitable sealing to prevent bypassing of air.

3.5 FLASHING AND PITCH POCKETS

Provide flashing and pitch pockets for equipment supports and roof penetrations and flashing where piping or ductwork passes through exterior walls in accordance with Section 07 60 00 FLASHING AND SHEET METAL.

3.6 IDENTIFICATION TAGS AND PLATES

Provide equipment, gages, thermometers, valves, and controllers with tags numbered and stamped for their use. Provide plates and tags of brass or suitable nonferrous material, securely mounted or attached. Provide minimum letter and numeral size of 1/8 inch high.

3.7 FIELD QUALITY CONTROL

3.7.1 Leak Testing

Upon completion of installation of air conditioning equipment, test factory- and field-installed refrigerant piping with an electronic-type leak detector. Use same type of refrigerant to be provided in the system for leak testing. When nitrogen is used to boost system pressure for testing, ensure that it is eliminated from the system before charging. Minimum refrigerant leak field test pressure shall be as specified in ANSI/ASHRAE 15 & 34, except that test pressure shall not exceed 150 psig on hermetic compressors unless otherwise specified as a low side test pressure on the equipment nameplate. If leaks are detected at time of installation or during warranty period, remove the entire refrigerant charge from the system, correct leaks, and retest system.

3.7.2 Evacuation, Dehydration, and Charging

After field charged refrigerant system is found to be without leaks or after leaks have been repaired on field-charged and factory-charged systems, evacuate the system using a reliable gage and a vacuum pump capable of pulling a vacuum of at least one mm Hg absolute. Evacuate system in accordance with the triple-evacuation and blotter method or in accordance with equipment manufacturer's printed instructions and recharge system.

3.7.3 Start-Up and Initial Operational Tests

Test the air conditioning systems and systems components for proper operation. Adjust safety and automatic control instruments as necessary to ensure proper operation and sequence. Conduct operational tests for not less than 8 hours.

3.7.4 Performance Tests

Upon completion of evacuation, charging, startup, final leak testing, and proper adjustment of controls, test the systems to demonstrate compliance with performance and capacity requirements. Test systems for not less than 8 hours, record readings hourly. At the end of the test period, average the readings, and the average shall be considered to be the system performance. Record the following readings:

3.8 WASTE MANAGEMENT

Separate waste in accordance with the Waste Management Plan, placing copper materials in designated areas for reuse. Close and seal tightly all partly used adhesives and solvents; store protected in a well-ventilated, fire-safe area at moderate temperature.

-- End of Section --

SECTION 23 81 23.00 20

COMPUTER ROOM AIR CONDITIONING UNITS
02/10

PART 1 GENERAL

1.1 REFERENCES

The publications listed below form a part of this specification to the extent referenced. The publications are referred to within the text by the basic designation only.

AIR-CONDITIONING, HEATING AND REFRIGERATION INSTITUTE (AHRI)

AHRI 410	(2001; Addendum 1 2002; Addendum 2 2005; Addendum 3 2011) Forced-Circulation Air-Cooling and Air-Heating Coils

AMERICAN SOCIETY OF HEATING, REFRIGERATING AND AIR-CONDITIONING ENGINEERS (ASHRAE)

ANSI/ASHRAE 15 & 34	(2013; Addenda A 2014; ERTA 2014) ANSI/ASHRAE Standard 15-Safety Standard for Refrigeration Systems and ANSI/ASHRAE Standard 34-Designation and Safety Classification of Refrigerants
ASHRAE 52.2	(2012; Errata 2013) Method of Testing General Ventilation Air-Cleaning Devices for Removal Efficiency by Particle Size
ASHRAE 55	(2013; ERTA 2014) Thermal Environmental Conditions for Human Occupancy
ASHRAE 62.1	(2010; Errata 2011; INT 3 2012; INT 4 2012; INT 5 2013) Ventilation for Acceptable Indoor Air Quality
ASHRAE 90.1 - IP	(2010; ERTA 2011-2013) Energy Standard for Buildings Except Low-Rise Residential Buildings

ASME INTERNATIONAL (ASME)

ASME B16.22	(2013) Standard for Wrought Copper and Copper Alloy Solder Joint Pressure Fittings
ASME B16.26	(2013) Standard for Cast Copper Alloy Fittings for Flared Copper Tubes
ASME B31.1	(2014; INT 1-47) Power Piping
ASME B31.5	(2013) Refrigeration Piping and Heat Transfer Components

ASTM INTERNATIONAL (ASTM)

ASTM B280	(2013) Standard Specification for Seamless Copper Tube for Air Conditioning and Refrigeration Field Service
ASTM D5864	(2011) Standard Test Method for Determining Aerobic Aquatic Biodegradation of Lubricants or Their Components
ASTM D6081	(1998; R 2009) Aquatic Toxicity Testing of Lubricants: Sample Preparation and Results Interpretation

ETL TESTING LABORATORIES (ETL)

ETL DLP	(updated continuously) ETL Listed Mark Directory

NATIONAL FIRE PROTECTION ASSOCIATION (NFPA)

NFPA 70	(2014; AMD 1 2013; Errata 1 2013; AMD 2 2013; Errata 2 2013; AMD 3 2014; Errata 3 2014) National Electrical Code
NFPA 90A	(2015) Standard for the Installation of Air Conditioning and Ventilating Systems

U.S. ARMY CORPS OF ENGINEERS (USACE)

EM 1110-2-1424	(1999; Change 1-2006; Change 2-2007) Engineering and Design -- Lubricants and Hydraulic Fluids

U.S. ENVIRONMENTAL PROTECTION AGENCY (EPA)

Energy Star	(1992; R 2006) Energy Star Energy Efficiency Labeling System (FEMP)

UNDERWRITERS LABORATORIES (UL)

UL Elec Equip Dir	(2011) Electrical Appliance and Utilization Equipment Directory

1.2 SYSTEM DESCRIPTION

Provide newand modify existing computer room air conditioning units (CRACU) complete and ready for operation. Size equipment based on Design Manual CS from the Air Conditioning Contractors of America; do not oversize.

1.3 SUBMITTALS

Government approval is required for submittals with a "G" designation; submittals not having a "G" designation are for Contractor Quality Control approval. Submit the following in accordance with Section 01 33 00 SUBMITTAL PROCEDURES:

SD-03 Product Data

Computer room air conditioning units

Submit documentation for Energy Star qualifications or meeting FEMP requirements. Indicate Energy Efficiency Rating.

Space temperature control system drawings

Filters;

Submit documentation indicating type of biobased material in product and biobased content. Indicate relative dollar value of biobased content products to total dollar value of products included in project. Submit documentation indicating relative dollar value of rapidly renewable materials to total dollar value of products included in project.

Local/Regional Materials

Submit documentation indicating distance between manufacturing facility and the project site. Indicate distance of raw material origin from the project site. Indicate relative dollar value of local/regional materials to total dollar value of products included in project.

SD-06 Test Reports

CRACU production schedule and factory test schedule

Manufacturer's factory test plans

Factory test reports

Field test schedule

Manufacturer's field test plans

Field test reports

Aquatic toxicity

SD-07 Certificates

Certificate of Specification Compliance

Credentials of the manufacturer's field test representative

SD-08 Manufacturer's Instructions

Installation manual for each type of CRACU

SD-10 Operation and Maintenance Data

Submit in accordance with Section 01 78 23 OPERATION AND MAINTENANCE DATA.

Computer room air conditioning units, Data Package 4

1.4 OZONE DEPLETION FACTOR

Equipment using refrigerants R-11, R-12, R-113, R-114, R-115, R-500, or refrigerants with ozone depletion factor (ODF) greater than 0.05, or refrigerants containing CFCs shall not be permitted. Refrigerant shall be an approved alternative refrigerant per EPA's Significant New Alternative Policy (SNAP) listing.

1.5 ENVIRONMENTAL REQUIREMENTS

For proper Indoor Environmental Quality, maintain positive pressure within the building. Ventilation shall meet or exceed ASHRAE 62.1 and all published addenda. Meet or exceed filter media efficiency as tested in accordance with ASHRAE 52.2. Thermal comfort shall meet or exceed ASHRAE 55.

1.6 SUSTAINABLE DESIGN REQUIREMENTS

1.6.1 Local/Regional Materials

Use materials or products extracted, harvested, or recovered, as well as manufactured, within a 500 mile radius from the project site, if available from a minimum of three sources.

PART 2 PRODUCTS

2.1 COMPUTER ROOM AIR CONDITIONING UNITS (CRACU)

ANSI/ASHRAE 15 & 34. Provide self-contained units, designed, factory assembled, and factory tested. Unit shall be listed in UL Elec Equip Dir or ETL DLPfor computer room application. Equipment shall be in accordance with ASHRAE 90.1 - IP, at a minimumhave a minimum Seasonal Energy Efficiency Ratio (SEER) of 12.0. Unit shall include room cabinet and frame, floor stand, fan section, filter section, cooling coil, reheat coil, humidifier, compressors, condensers, controls, and, interconnecting piping internal to the CRACU.

2.1.1 Cabinet and Frame

2.1.1.1 Unit Cabinet

Unit frame shall be minimum 14 gage welded steel tubes or steel angles and shall be mill-galvanized or coated with an epoxy finish, or an approved manufacturer's standard finish, if equivalent.

Exterior panels shall be furniture grade steel sheet, minimum of 20 gage, mill-galvanized or coated with a corrosion-inhibiting epoxy finish, or an approved equivalent finish. Mill galvanized sheet metal shall be coated with not less than 1.25 ounces of zinc per square foot of two-sided surface. Mill rolled structural steel shall be hot-dip galvanized or primed and painted. Cut edges, burns and scratches in hot-dip galvanized surfaces shall be coated with galvanizing repair coating.

Provide removable panel for access to controls without interrupting airflow. Panels shall be gasketed to prevent air leakage under system operating pressure and shall be removable for service access without the use of special tools. Condensate pans shall be minimum 22 gage Type 304 stainless steel, non-corroding, double-sloped, and shall be piped to drain.

Exterior surfaces of cabinets constructed of mill-galvanized steel shall be finished by the manufacturer's standard enamel finish in the indicated color.

CRACU manufacturer's standard cabinet materials and finishes will be acceptable if considered equivalent to the above requirements by the Contracting Officer.

2.1.1.2 Cabinet Interiors Sound Attenuation

Provide a factory-installed sound attenuation system in the interior of the CRACU cabinet.

CRACU cabinet panels interior shall be provided with one inch of 1 1/2 pound per cubic foot neoprene-coated fiber glass insulation on interior of cabinet panels. Insulation shall be applied to the cabinet panels with 100 percent adhesive coverage and both the insulation and the adhesive shall conform to NFPA 90A.

.

Fans and compressors located in the CRACU interior cabinet shall be provided with vibration isolators between their respective support frames and the cabinet framing.

CRACU manufacturer's standard interior cabinet sound attenuation materials and finishes will be acceptable if considered equivalent to the above requirements by the Contracting Officer.

2.1.2 Fan Section

Fans which force air through coils into computer rooms shall have belt drives and adjustable sheaves sized to ensure achievement of design air flow by field adjustments. Fan system design shall be such that design air flow shall be achieved at the midpoint of sheave adjustment.

The supply air fan shall be AMCA certified, double-inlet/double-width, and equipped with forward-curved blades wheel. The supply air fan shall be statically and dynamically balanced and equipped with V-belt drive. The fan shall have self-aligning, permanently lubricated ball bearings with a minimum life span of 100,000 hours. Assess potential effects of lubricant on aquatic organisms in accordance with ASTM D6081 and submit aquatic toxicity reports. Assess biodegradation in accordance with ASTM D5864. In accordance with EM 1110-2-1424 Chapter 8, aquatic toxicity shall exceed 1,000 ppm at LL50 and biodegradation shall exceed 60 percent conversion of carbon to carbon dioxide in 28 days.

Provide V-belt drive sized for 200 percent of the motor nameplate rating. Fan speed shall be adjustable with cast iron variable pitch pulleys. Sheaves shall be within the middle one third of the sheave adjustment range.

The fan motor shall be drip-proof with NEMA rated frame, inherent overload protection, and sliding adjustable motor base. The maximum vibrations shall not exceed 2 mils (0.05 mm) in any plane.

2.1.3 Cooling Coil

Provide AHRI 410 coils and slope for drainage. Coil shall be constructed

of seamless copper tubes with plate aluminum fins. Indoor and outdoor coils shall be matched and from same manufacturer. Use a low sensible heat ratio for more moisture removal. Each coil, in the production process, shall be individually tested at 320 psi with compressed air under water and verified to be air tight. Provide DX coil complete with a distributor and thermostatic expansion valve with external equalizer. Provide condensate drain pan of stainless steel construction with nonferrous connections and internal trap, and a condensate pump system complete with integral pump discharge check valve, integral float switch, reservoir, and pump and motor assembly.

2.1.4 Filters

Provide UL listed2 inches thick deep pleated fiberglass throwaway type filters. Provide filtration media with a Minimum Efficiency Reporting Value (MERV) of 8 as determined by ASHRAE 52.2. Provide one complete spare filter bank set for installation prior to final acceptance testing covered in Part 3 of this section.

2.1.5 Reheat Coil

Provide AHRI 410 reheat coils and slope for drainage. Provide coil constructed of seamless copper tubes with plate aluminum fins. Each coil, in the production process, shall be individually tested at 320 psi with compressed air under water and verified to be air tight.

Provide electric reheat coils with low watts density. The electric reheat coils shall be enclosed in 304 stainless steel tubes and 304 stainless steel fins. Provide modulating control of the electric reheat coils by Silicon Controlled Rectifier (SCR). Provide UL or ETL listed safety switches to protect system from overheating.

2.1.6 Humidifier

Humidifier section shall include liquid-level control, emergency overflow and automatic water supply system factory pre-piped for final connection. Provide stainless steel evaporator pan with water high level and low level alarms. Arrange system to be cleanable and serviceable.

Provide steam generator type humidifier. Provide steam generator humidifier cutout. Controls shall include steam generation, and flush cycle. Furnish two extra canisters.

2.1.7 Refrigeration System

Provide compressors complete with vibration isolation, suction and discharge service valves, high and low pressure safety switches, and built-in overload protection. Provide refrigeration circuits including hot gas mufflers, liquid-line filter-drier, refrigerant sight glass and moisture indicator, externally equalized expansion valve, and liquid-line solenoid valve factory connected with refrigeration copper tubing. Provide hot gas bypass.

2.1.7.1 Compressors

Provide single or dual, hermetic or semi-hermetic or scroll compressors.

2.1.7.2 Refrigerant Tubing

Field-installed refrigerant tubing for split systems shall be ASTM B280, cleaned, dehydrated, and sealed. Further, provide ASME B16.22 solder joint refrigerant fittings and adapters with silver brazing alloy solder and silver brazing alloy flux. During brazing operations bleed a small amount of dry oil-free nitrogen continuously through the refrigerant tubing. If required for connections to equipment, provide ASME B16.26 flared fittings.

2.1.8 Condenser

Provide condenser circuit pre-piped with start-up and head pressure controls to maintain system operation at ambient temperatures down to 20 degrees F degrees F.

2.1.8.1 Air-cooled Condenser

Provide remote air-cooled condenser arranged for vertical air discharge. The direct-driven propeller fans shall have factory balanced aluminum blades and shall be equipped with fan guards. The coils shall be constructed from seamless copper tubes with plate type aluminum fins. The coils, in the production process, shall be pressure tested with compressed air 300 psig under water and verified to be leak-free. The air-cooled condensers casings and other components shall be suitable for outdoor location and constructed from aluminum with manufacturer's standard corrosion-resistant finish,or galvanized steel. An integral factory wired and tested control panel shall be provided for the condenser.

2.1.9 Space Temperature Control System

Provide microprocessor control system integral with unit including electronic control center, control valves, sensors, wiring, and other appurtenances for workable system. Provide access panel or door in front of unit.

Isolate electronic control center from conditioned airstream to allow service while system is in operation. Provide control sensors in unit for cooling, dehumidifying, and humidifying. High-voltage circuits in system shall have individual leg overload protection. Starters, contactors, and relays shall be controlled by 24 volt control circuit.

High-voltage circuit components shall be protected by safety lock, dead-front panel. Mount nonautomatic, molded-case circuit breaker in high-voltage section of electrical panel. Operating mechanism shall prevent access to high-voltage electrical components until switched to "OFF" position.

Include the following control capabilities:

a. Capable of changing the set points and sensitivity of the space and humidity along with their low and high alarm points.

b. Logging capability of the last 10 alarms and run time.

c. Diagnostics

d. Refrigerant compressor sequencing

Provide controls under Section 25 10 10.00 24. Provide a controls interface on CRACU to enable the DDC system to monitor the following operating parameters and alarm conditions: high and low computer room temperature, relative humidity, CRACU status, .

2.1.10 Alarm Panel System

Provide unit with cabinet-mounted alarm panel which shall monitor high and low space temperature, high and low space humidity, dirty filters, loss of airflow, compressor high head pressure, and humidifier problems. Provide underfloor water detector. Provide field accessible local audible alarm with silence pushbutton. Provide push-to-test lamps or all-lamp test pushbutton.

2.1.11 Air Return and Delivery Orientation

Computer room air conditioning units shall be downflow discharge, top return, draw-thru cooling coil, and shall discharge air with through an acoustically-lined sweep or acoustically-lined multiple turning vane elbows provided to direct the flow of air away from the back of the unit. Provide acoustical lining on the interior of in compliance with with requirements specified hereinafter in paragraph "Cabinet Interiors Sound Attenuation".

Computer room air conditioning units shall be upflow discharge, draw-thru cooling coil, and shall be fitted with collars for top supply duct connections. Upflow discharge shall discharge air with a acoustical lined sweep or acoustically-lined multiple turning vane elbows provided to direct the flow of air away from the back of the unit. Supply (discharge air) ducting from the upflow units shall be off of each blower discharge outlet, that is, one duct and duct collar per blower. Provide acoustical lining on the interior of in compliance with with requirements specified hereinafter in paragraph "Cabinet Interiors Sound Attenuation".

2.1.12 Floorstand

Unit shall be provided with elevating floorstand or jacks for freestanding installation on the main building floor. Floorstand or jacks shall elevate the unit to the height of the raised computer floor and shall allow for leveling and locking at the desired height. Floorstand or jacks shall be retractable, or removable, for installing the unit directly on the raised floor. Unit shall be fully gasketed (rubber or neoprene) to prevent air leakage at the raised floor penetration.

2.2 Corrosion Protection For Coastal Installations

Provide either the polyelastomer finish coating system or the phenolic finish coating system on the interior and the exterior surfaces of HVAC heat exchanging equipment, The coating system shall not reduce the HVAC equipment's performance rating.

Finish coating shall be applied at the premises of the HVAC equipment manufacturer or at the premises of the coating manufacturer or his authorized applicator. Provide finish coating in colors gray, or aluminum, or ivory. All components of the special finish coating systems, including primers and intermediate coats, shall be applied by immersion dip-coating or spray-coating in accordance with coating manufacturer's written procedures.

If special finish coatings are applied at the finish coating manufacturer's (or his authorized applicator's) premises, the equipment to be finish coated shall be transported to and from the finish coating manufacturer's premises by the Contractor. The finish-coating manufacturer shall be responsible for necessary disassembly of the HVAC equipment and re-assembly of final finish coated equipment.

Submit for approval a Certificate of Specification Compliance furnished by the finish coating system manufacturer. Requirements for certificate include:

a. Name of firm that provided the finish coating system.

b. Project title and Navy construction contract number.

c. Listing of the pieces of equipment that were finish coated by this firm.

d. Certificate shall certify that the finish coating materials and application procedures employed conform to the contract specifications.

e. Date of final inspection by this firm and printed name and signature of the inspector.

f. Printed name and signature of the officer of the firm that is responsible for firm's certification program .

2.2.1 Polyelastomer Finish Coating System

2.2.1.1 Heat Exchanger Coil (Including Evaporator Coil) Surfaces

a. Acrylic polymer resin primer: 0.025 mm (1 mil) minimum dry film thickness.

b. Polyelastomer resin top coating: 3 coats, 0.038 mm (1.5 mils) minimum total dry film thickness.

c. In lieu of coating, provide copper tubes and copper fins

2.2.1.2 Uninsulated Interior Surfaces and Exterior Surfaces

Polyelastomer resin: 3 coats, 0.100 to 0.150 mm (4 to 6 mils) minimum total dry film thickness.

2.2.1.3 Insulated Interior Surfaces

Vinyl: 0.050 to 0.250 mm (2 to 10 mils) minimum dry film thickness

2.2.2 Phenolic Finish Coating System

Provide a resin base thermosetting phenolic finish.

2.2.2.1 Heat Exchanger Coil (Including Evaporator Coil) Surfaces

a. Apply phenolic finish to the entire coil. Provide a minimum of two coats. Total minimum dry film thickness shall be 0.075 mm (3 mils).

b. In lieu of coating, provide coil of copper tubes and copper fins

2.2.2.2 Uninsulated Interior Surfaces and Exterior Surfaces

Amine cured epoxy phenolic finish: 0.150 to 0.175 mm (6 to 7 mils) minimum total dry film thickness.

2.2.2.3 Insulated Interior Surfaces

Polyester or Vinyl Ester finish: 0.050 to 0.250 mm (2 to 10 mils) minimum dry film thickness.

2.3 ELECTRICAL

2.3.1 Electrical Motors, Controllers, Contactors, and Disconnects

Furnish with respective pieces of equipment. Motors, controllers, contactors, and disconnects shall conform to Section 26 20 00 INTERIOR DISTRIBUTION SYSTEM, as modified and supplemented by this section. Provide electrical connections under Section 26 20 00 INTERIOR DISTRIBUTION SYSTEM. Provide controllers and contactors with maximum of 120-volt control circuits, and auxiliary contacts for use with controls furnished. Motors shall be variable-speed. When motors and equipment furnished are larger than sizes indicated, the cost of providing additional electrical service and related work shall be included under this section.

2.3.2 Electrical Control Wiring

Provide control wiring under this section in accordance with NFPA 70 and Section 26 20 00 INTERIOR DISTRIBUTION SYSTEM. Provide Space temperature control system drawings which include point-to-point electrical wiring diagrams.

2.4 METAL DUCTWORK

Requirements for HVAC water piping and metal ductwork is specified in Section 23 64 26 CHILLED, CHILLED-HOT AND CONDENSER WATER PIPING AND ACCESSORIES and Section 23 00 00 AIR SUPPLY, DISTRIBUTION, VENTILATION, AND EXHAUST SYSTEMS.

2.5 FIRE PROTECTION DEVICES

The requirements for duct smoke detectors are specified in Section 25 00 00.

2.6 SOURCE QUALITY CONTROL

Provide factory test plans, factory test schedules, factory tests and factory test reports on each of the CRACUs; .

2.6.1 Manufacturer's Factory Test Plans

For each CRACU, submit a factory test plan which when followed during factory testing shall verify that the performance scheduled on the drawings is met by the produced CRACU models.

The manufacturer shall perform factory tests on the actual CRACUs produced for this project. The test reports shall document the performance tests conducted on the factory assembled computer room air conditioning units.

Performance testing on the individual computer room air conditioning unit components, not factory assembled, is not acceptable.

Submit the required test plans for review and approval to the Contracting Officer at least 90 calendar days before scheduled factory test date.

2.6.1.1 Test Procedure

Indicate in each test plan the factory acceptance test procedures. Procedures shall be structured to test all modes of operation to confirm that the controls through all modes of control to confirm that the controls are performing in accordance with the intended sequence of control.

Controllers shall be verified to be properly calibrated and have the proper set point to provide stable control of their respective equipment.

Include in each test plan a detailed step-by-step procedure for testing automatic controls provided by the manufacturer.

2.6.1.2 Performance Variables

Each test plan shall list performance variables that are required to be measured or tested as part of the field test. Include in the listed performance indicated on the equipment schedules on the contract design drawings.

Manufacturer shall furnish with each test procedure a description of acceptable performance results that shall be verified. Manufacturer shall identify the acceptable limits or tolerances within which each tested performance variable shall acceptably operate.

2.6.1.3 Test Configuration

Plans shall indicate that tests are to be performed for a minimum of four continuous hours in a wet coil condition. If test period is interrupted, the four hour test period shall be started over. Each test plan shall be job specific and shall address the particular CRACUs and particular conditions which exist with this contract. Generic or general preprinted test procedures are not acceptable.

2.6.1.4 Tested Variables

Plans shall provide for air side testing which includes verification of the airflow, total static pressure; fan drive motor KW, amperage and RPM; and fan RPM. Provide entering air temperatures equal to those indicated on the CRACU schedules.

2.6.1.5 Thermal Testing

Plans shall provide thermal testing utilizing with temperatures equal to those indicated on the CRACU schedules. Thermal testing shall verify CRACU heating, sensible cooling, total cooling, and humidifying performance scheduled on the contract drawings.

2.6.1.6 Specialized Components

Include procedures for field testing and field adjusting specialized components, such as hot gas bypass control valves, or pressure valves.

2.6.1.7 Factory Test For Sound Pressure Level

Determine the A-weighted sound pressure level for the indoor portion of each of the CRACU's; .

Each unit shall be mounted on a raised floor duplicating of the installation configuration indicated on the contract drawings. Unit shall be located at least 5 feet 6 inches from test room walls. No other equipment shall be operating in the test room during sound level testing of subject unit. Background sound levels shall be at least 10 dB below lowest sound pressure level measured on subject unit. Testing shall be conducted by using an ANSI Type 1 or 2 sound level meter located 3.3 feet from the unit under test and 3.3 feet above raised floor. Measure and record A-weighted sound pressure level on all four sides of unit.

2.6.1.8 Factory Tests Reporting Forms

Each test plan shall include the required test reporting forms to be completed by the Contractor's testing representatives. Submit factory test reports, referencing each tested CRACU serial number, and receive approval before delivery of CRACU to the project site.

2.6.2 CRACU Production Schedule and Factory Test Schedule

The Government reserves the right to witness factory tests for all CRACU units.

Provide the CRACU production schedule and factory test schedule for tests to be performed at the manufacturer's test facility. Submit planned production schedule, and factory test schedule and test location, to the Contracting Officer as soon as it is scheduled but not less than 60 calendar days prior to the scheduled factory test date. Track this schedule through the production phases and if a scheduled factory test date changes, give advanced notice to Contracting Officer as soon as possible but at least 15 calendar days in advance of the scheduled test dates.

2.6.3 Factory Tests

Conduct the factory testing in compliance with the Contracting Officer approved manufacturer's field test plan, and in accordance with additional field testing requirements specified herein. Record the required data using the test reporting forms approved of the approved field test plan. Conduct the test for each CRACU for the continuous test period in the approved test plan. A CRACU shutdown before the continuous test period is completed shall result in the test period being started again and run for the required duration.

2.6.4 Deficiency Resolution

The test requirements shall be acceptably met; deficiencies identified during the tests shall be corrected in compliance with the manufacturer's recommendations and corrections tested as specified in the paragraph "Factory Test Plans".

2.6.5 Factory Test Reports

Use the test reporting forms approved in the factory test plan. Final

test report forms shall be typed including data entries and remarks. Completed test report forms for each CRACU shall be reviewed, approved, and signed by the Manufacturer's test director.

PART 3 EXECUTION

3.1 INSTALLATION

3.1.1 CRACU System

Installation of each CRACU system including equipment, materials, installation, workmanship, fabrication, assembly, erection, examination, inspection, and testing, shall be in accordance with ASME B31.1, ASME B31.5, NFPA 70, as modified and supplemented by the requirements of this section and the CRACU manufacturer's recommendations.

3.1.2 Installation Instructions

Provide a manufacturer's installation manual for each type of CRACU.

3.1.3 Connections to Existing Systems

Notify the Contracting Officer in writing at least 15 calendar days prior to the date the connections are required. Obtain approval before interrupting service. Furnish materials required to make connections into existing systems and perform excavating, backfilling, compacting, and other incidental labor as required. Furnish labor and tools for making actual connections to existing systems.

3.2 FIELD QUALITY CONTROL

Upon completion and before final acceptance of work, test each CRACU subsystem in service to demonstrate compliance with the contract requirements, including field testing specified below. Adjust controls and balance systems prior to final acceptance of completed systems. Test controls through every cycle of operation. Test safety controls to demonstrate performance of required function. Correct defects in work provided by Contractor and repeat tests. Furnish steam, fuel, water, electricity, instruments, connecting devices, and personnel for tests. Flush and clean piping before placing in operation. Clean equipment, piping, strainers, and ducts. Prior to commencement of field testing, remove all filters and provide new filters.

3.3 FIELD TESTING

Provide field test plans, field test schedules, field tests and field test reports on each of the CRACUs. Field test each CRACU for Contracting Officer acceptance in accordance with the CRACU manufacturer's approved field test plan.

3.3.1 Manufacturer's Field Test Plans

Submit field test plans developed by the manufacturer for each CRACU; submit the field test plans at least 90 calendar days prior to planned date of the field test. Field test plans developed by the installing Contractor, or the equipment sales agency furnishing the CRACU, will not be acceptable.

The Contracting Officer will review and approve the field test plan for

each of the listed CRACU's prior to commencement of field testing of the equipment. The approved field test plans shall be followed for the field tests of the CRACU and test reporting.

3.3.1.1 Coordinated Testing

Indicate in each field test plan when work required by this section requires coordination with test work required by other specification sections. Furnish test procedures for the simultaneous or integrated testing of: CRACU controls which interlock and interface with controls factory prewired.

3.3.1.2 Prerequisite Testing

Each CRACU for which performance testing is dependent upon the completion of the work covered by Section 23 05 93 TESTING, ADJUSTING AND BALANCING FOR HVAC must have that work completed as a prerequisite to testing work under this section. Indicate in each field test plan when such prerequisite work is required.

3.3.1.3 Test Procedure

Indicate in each field test plan the CRACU manufacturer's published start-up, and field acceptance test procedures. Include in each test plan a detailed step-by-step procedure for testing automatic controls provided by the manufacturer.

Procedures shall be structured to test the controls through all modes of control to confirm that the controls are performing with the intended sequence of control.

Controllers shall be verified to be properly calibrated and have the proper set point to provide stable control of their respective equipment.

3.3.1.4 Performance Variables

Each test plan shall list performance variables that are required to be measured or tested as part of the field test.

Include, in the listed performance variables, requirements indicated on the CRACU schedules on the design drawings. Manufacturer shall furnish, with each test procedure, a description of acceptable results that have been verified.

Manufacturer shall identify the acceptable limits or tolerances within which each tested performance variable shall acceptably operate.

3.3.1.5 Test Configuration

Plans shall indicate that tests are to be performed for a minimum of four continuous hours in a wet coil condition. If test period is interrupted, the four hour test period shall be started over. Each test plan shall be job specific and shall address the particular CRACUs and particular conditions which exist with this contract. Generic or general preprinted test procedures are not acceptable. Tests shall include with or without the air discharge elbows; or a top air discharge configuration and corrosion protection.

3.3.1.6 Tested Variables

Plans shall provide for air side testing which includes verification of the airflow, total static pressure; fan drive motor KW, amperage and RPM; and fan RPM. Provide entering air temperatures equal to those indicated on the CRACU schedules.

3.3.1.7 Thermal Testing

Plans shall provide thermal testing utilizing 40 percent ethylene glycol and 60 percent water solution with temperatures equal to those indicated on the CRACU schedules. Thermal testing shall verify CRACU heating, sensible cooling, total cooling, and humidifying performance scheduled on the contract drawings.

3.3.1.8 Specialized Components

Include procedures for field testing and field adjusting specialized components, such as hot gas bypass control valves, or pressure valves.

3.3.1.9 Field Test Reporting Forms

Each test plan shall include the required test reporting forms to be completed by the Contractor's testing representatives.

3.3.2 Field Test Schedule

Notify the Contracting Officer in writing at least 30 calendar days prior to the testing. Within 30 calendar days after acceptable completion of testing, submit each test report for the review and approval of the Contracting Officer.

3.3.3 Manufacturer's Test Representative

Furnish a factory trained field test representative authorized by the CRACU manufacturer to oversee the complete execution of the field testing. This test representative shall also review, approve, and sign the completed field test report. Signatures shall be accompanied by the person's name typed.

Submit credentials of the manufacturer's field test representative proposed, including current telephone number, to the Contracting Officer for review and approval. Submit these credentials with the written advance notice of the field tests

3.3.4 Field Tests

Conduct the field testing in compliance with the Contracting Officer approved manufacturer's field test plan, and in accordance with additional field testing requirements specified herein. Record the required data using the test reporting forms approved of the approved field test plan. Conduct the test for each CRACU for a continuous 24-hour test period. A CRACU shutdown before the continuous 24-hour test period is completed shall result in the 24-hour test period being started again and run for the required duration.

3.3.5 Deficiency Resolution

The test requirements shall be acceptably met; deficiencies identified

during the tests shall be corrected in compliance with the manufacturer's recommendations. Corrections shall be tested again in compliance with the requirements specified in the paragraph "Field Test Plans".

3.3.6 Field Test Reports

Use the test reporting forms approved in the field test plan. Final test report forms shall be typed, including data entries and remarks. Completed test report forms for each CRACU shall be reviewed, approved, and signed by the Contractor's test director and the QC manager.

3.4 WASTE MANAGEMENT

Separate waste in accordance with the Waste Management Plan, placing copper materials, ferrous materials, and galvanized sheet metal in designated areas for reuse. Close and seal tightly all partly used adhesives and solvents; store protected in a well-ventilated, fire-safe area at moderate temperature.

-- End of Section --

SECTION 25 10 10.00 24

ICS FRONT END INTEGRATION (NAVFAC PWD)
05/13

PART 1 GENERAL

1.1 SUMMARY

The Industrial Control System (ICS) shall perform supervisory monitoring and supervisory control of base-wide building control systems and utility control systems using the Niagara Framework with Fox protocol as specified.

NOTE: Appendices B - F referenced throughout this UFGS can be accessed from the UFGS Graphics Table of Contents. TO DOWNLOAD UFGS GRAPHICS Go to http://www.wbdg.org/ccb/NAVGRAPH/graphtoc.pdf.

This project requires the installation of a new Integrated Automation System (IAS) constructed using a Tridium Niagara N4 Framework with BACnet, MODBUS, and existing legacy field level devices. The new IAS shall utilize multiple Open Niagara N4 JACE 8000 controller(s), and BACnet control devices, networked with a Niagara N4 Supervisor.

The Contractor will be required to perform the following:

a. Furnish, install, configure and commission a new Tridium Niagara N4 Framework with BACnet, MODBUS, and existing legacy devices (if identified in the project scope), integrate existing legacy DDC controllers and/or provide new BACnet DDC controllers for the equipment identified in the IAS drawings, including all components, software and applications required to meet the sequence of operation and the design/performance intent of the systems; Air Handling Units (AHUs), Roof Top Units (RTUs), Exhaust Fans (EXs), Cabinet Unit Heaters (CUHs), Variable Air Volume Boxes (VAVs), Heat Pump Units (HPUs), Fan Coil Units (FCUs), Boiler and Chiller Plants, Electric sub-meters and all other equipment indicated on plans and drawings.

b. Provide Application Specific Controllers (ASCs) and BACnet Programmable Control Units (PCUs) as specified herein and as indicated on the IAS drawings. Provide I/O and ancillary devices as specified herein, as indicated on the IAS drawings, and as necessary to perform the sequences of operation. Provide BACnet BTL certified products that communicate on EIA-485 BACnet MS/TP bus topology to meet the functional specifications.

1.1.1 System Requirements

Provide an ICS as specified and shown, and in accordance with the following characteristics:

The Industrial Control System consists of a high-speed, peer-to-peer network of workstations, servers, routers, network switches and stand-alone supervisory controllers. This network provides the capability to integrate BACnet, LonWorks, MODBUS, OPC and other open and proprietary communication protocols into one open, interoperable system.

A web based controller and server with a network interface card gathers data from this system and generates web pages accessible through an Internet Explorer™ web browser on each workstation connected to the network. Operators are able to perform normal and expanded operator functions through this web browser interface.

The system installed in this project including all associated equipment and accessories, shall tie into the existing Niagara-based Industrial Control System. Each SC shall communicate to other open and legacy protocol systems/devices installed in the facility.

The ICS is comprised of supervisory controllers which are based on a hierarchical architecture incorporating Niagara N4 Framework™. All new and replacement equipment shall be compliant with the Niagara N4 Framework.

1.1.1.1 General System Requirements

a. The system shall perform supervisory monitoring and control functions including but not limited to Scheduling, Alarm Handling, Trending, Overrides, Report Generation, and Electrical Demand Limiting as specified.

b. The system shall include a Graphical User Interface which shall allow for graphical navigation between systems, graphical representations of systems, access to real-time data for systems, ability to override points in a system, and access to all supervisory monitoring and control functions. See Appendices A and B for additional information..

c. All software used by the ICS and all software used to install and configure the ICS shall be licensed to and delivered to NAVFAC PWD CIO..

d. All necessary documentation, configuration information, configuration tools, programs, drivers, and other software shall be licensed to and otherwise remain with the Government such that the Government or their agents are able to repair, replace, upgrade, and expand the system without subsequent or future dependence on the Contractor. Software licenses shall not require periodic fees and shall be valid in perpetuity.

e. Provide sufficient documentation and data, including rights to documentation and data, such that the Government or their agents can execute work to repair, replace, upgrade, and expand the system without subsequent or future dependence on the Contractor.

f. The ICS shall interface directly to ASHRAE 135 (BACnet), CEA-709.1-C, Modbus, OPC DA, and Niagara Framework field control systems as specified and may interface to field control systems using other protocols via an M&C Software protocol driver or a Gateway.

g. For ICS systems with Monitoring and Control Software functionality implemented in Monitoring and Control (M&C) Controller Hardware, provide sufficient additional controller hardware to support the full capacity requirements as specified.

h. All Niagara Framework components shall have an unrestricted interoperability license with a Niagara Compatability Statement (NiCS) following the Tridium Open NiCS Specification and shall have a value

of "ALL" for "Station Compatibility In", "Station Compatability Out", "Tool Compatability In" and "Tool Compatability Out". Note that this will result in the following entries in the license.dat file:
"accept.station.in=*"
"accept.station.out=*"
"accept.wb.in=*"
"accept.wb.out=*"

i. The intent of this specification is to provide an open source Industrial Control System (ICS) based on the Tridium Niagara Platform. All controllers shall be fully programmable via the embedded Niagara Workbench tool requiring only a web browser. Products requiring a licensed, off site, non-embedded programming tool are not acceptable

1.1.1.2 Common Installed Equipment in NAVFAC ICS Operations Centers

The following computer equipment and software exist at NAVFAC PWD ICS Operations Centers, and shall be directly supported as part of this project:

a. The Niagara N4 front-end system is composed of virtualized Windows fail-over clusters, with each cluster composed of two or more virtualized computers running the latest version of Windows Server software and the Microsoft Hypervisor.

b. Niagara Servers:
One serves to provide the situation screen wall displays.
One serves the operator stations.
One SQL Server: Stores all trending data in the ICS system.
All data for the above servers and clusters is stored on a Storage Area Network (SAN) accessed via iSCSI.

1.1.1.3 Supervisory Controller Communication

All SC's shall be able to communicate to each of the following languages/protocols: DNP, IEC-61850/MMS, Lon, BACnet, or Modbus. Communications between SC's, and between SC's and Niagara servers, shall be by Fox or other Niagara-compatible protocol, communications between SC's/Servers and workstations shall be by HTTP or HTTPS. Sub-networks to other devices via alternative protocols are strictly prohibited.

1.1.1.4 Niagara Framework Requirements

The ICS shall use the Niagara Framework and shall communicate with Niagara Framework field control systems using the Fox protocoland HTTP over the Government furnished IP network as indicated and specified.

1.1.2 Information Assurance Requirements

Information Assurance for the system shall be addressed in accordance with the following requirements:

1.1.2.1 Cyber Security

Prior to initiating any work on site pertaining to the ICS each contractor employee who will work on programming or existing ICS infrastructure shall:

a. Complete the SAAR-N form (provided by NAVFAC PWD) and provide to

Contracting Officer;

b. Complete the annual Department of Defense Information Assurance Awareness training at http://iase.disa.mil/eta/iaav9/iaa_v9/index.htm;
c. Have proof of a clean background investigation with a least a Facility Access Determination (FAD)

Contractor should plan on the clearance activities listed above taking 12 weeks for personnel not already holding a Government security clearance. Clearance activities can take longer than 12 weeks for individuals found to have clearance issues during their background check.

Admin Rights: Contractors will not be granted full admin rights to any government-owned computer. Local accounts on government computers are not allowed; contractors whose personnel who have submitted their forms and have a proper background check or clearance will be granted NAVFAC PWD Domain accounts for their access needs for the duration of the project. In order to receive the domain accounts for the Contractor's employees, the Contractor shall complete one copy of the Contractor Domain Account Request form (provided by NAVFAC PWD).

USB 'thumb' drives are prohibited on Government equipment. Government-supplied USB hard drives are acceptable and can be checked out from CIO.

The Contractor shall not connect contractor owned computer equipment to the Industrial Controls System, nor leave behind any telecommunication infrastructure (i.e., cellular modems) that allows remote access into installed equipment.

The Contractor will be allowed to check out ICS laptops for field use. Laptops for field use while on-site may be checked out from the ICS laptop pool managed by NAVFAC PWD CIO at NBK-Bangor, WA. Laptop check-out reservations should be scheduled at least one week in advance of need to assure availability.

Provide secure password protection for each device/system; provide all integration necessary to incorporate centralized authentication with the NAVFAC PWD Windows Domain Controllers. Password information shall be need-to-know, and the Contractor shall not disclose it to others. Password information shall be submitted via hard copy correspondence or CD to the Contracting Officer. Passwords shall not be conveyed by e-mail or 3rd party means.

If at any of the above security requirements are violated, the individual(s) will have (at a minimum) their Government computer access privileges revoked. All IT related possessions may be confiscated pending an investigation.

1.1.2.2 ICS Network

Upon request by the Contractor, the Government will provide IP addresses for each Ethernet-addressable device. The Contractor shall first provide a spreadsheet with the MAC address, serial number, device nomenclature, firmware revision, planned port on switch to which it is connected, system function being served by each device installed, and a blank field for the IP address. NAVFAC PWD CIO will provide a blank template spreadsheet for completion by the Contractor. The government will return the spreadsheet to the Contractor with IP addresses filled in. IP addresses will not be provided electronically.

All devices installed by this project shall have Ethernet interfaces capable of functioning normally during heavy network traffic situations without failing or requiring manual reset.

The Contractor shall provide and program initial usernames and passwords for Ethernet switches, and submit this information to the Contracting Officer as part of the request to have the device(s) connected to the network.

1.1.3 ICS Programming Software

For software used for controllers below the supervisory controller and is not already existing on site, the Contractor shall provide 6 copies of the software. For a list of software currently installed on Government workstations and laptops see Appendix F.

For software used to program and create graphical content on the supervisory controller and is not already existing on site, the Contractor shall provide 3 copies of the software.

The installed version of the programming software for each device shall be licensed to NAVFAC PWD CIO. Software shall be submitted on CD-ROM, and one hard copy and one electronic copy of the software user manual shall be submitted for each piece of software provided.

1.1.4 Symbols, Definition and Abbreviations

Symbols, definitions, and engineering unit abbreviations used in displays, submittals and reports shall be as currently used in the existing ICS graphical user interface unless noted otherwise. See Appendix B for more information.

1.1.5 System Units and Accuracy

Displays, print-outs and calculations shall be performed in English (inch-pound)units. Calculations shall have accuracy equal to sensor accuracy. Displays and printouts shall present values to at least one significant figure.

1.1.6 Data Packages/Submitals Requirements

Technical data packages consisting of computer software and technical data (meaning technical data which relates to computer software) which are specifically identified in this project and which may be defined/required in other specifications shall be delivered strictly in accordance with the CONTRACT CLAUSES and in accordance with the Contract Data Requirements List, DD Form 1423. Data delivered shall be identified by reference to the particular specification paragraph against which it is furnished. All submittals not specified as technical data packages are considered shop drawings under the Federal Acquisition Regulation Supplement (FARS) and shall contain no proprietary information and shall be delivered with unrestricted rights.

1.2 REFERENCES

The publications listed below form a part of this specification to the extent referenced. The publications are referred to within the text by

the basic designation only.

AMERICAN SOCIETY OF HEATING, REFRIGERATING AND AIR-CONDITIONING ENGINEERS (ASHRAE)

ASHRAE 135	(2010; INT 1-3 2011; Addenda AD & AE 2011; Errata 2012; INT 5 2012) BACnet—A Data Communication Protocol for Building Automation and Control Networks

CONSUMER ELECTRONICS ASSOCIATION (CEA)

CEA-709.1-C	(2010) Control Network Protocol Specification
CEA-709.3	(1999; R 2004) Free-Topology Twisted-Pair Channel Specification
CEA-852-B	(2010) Tunneling Component Network Protocols Over Internet Protocol Channels

INSTITUTE OF ELECTRICAL AND ELECTRONICS ENGINEERS (IEEE)

IEEE 1815	(2012) Electric Power Systems Communications-Distributed Network Protocol (DNP3)
IEEE C62.41	(1991; R 1995) Recommended Practice on Surge Voltages in Low-Voltage AC Power Circuits

LONMARK INTERNATIONAL (LonMark)

LonMark Interoperability Guide	(2005) LonMark Application-Layer Interoperability Guide and LonMark Layer 1-6 Interoperability Guide; Version 3.4
LonMark SNVT List	(2003) LonMark SNVT Master List; Version 113
LonMark XIF Guide	(2001) LonMark External Interface File Reference Guide; Revision 4.402

MODBUS ORGANIZATION, INC (MODBUS)

Modbus	(2006) Modbus Application Protocol Specification; Version 1.1b and Modbus Messaging on TCP/IP Implementation Guide; Version V1.0b

NATIONAL FIRE PROTECTION ASSOCIATION (NFPA)

NFPA 262	(2011) Standard method of Test for Flame Travel and Smoke of Wires and Cables for Use in Air-Handling Spaces
NFPA 70	(2011; Errata 2 2012) National Electrical Code

OPC FOUNDATION (OPC)

OPC DA	(2002) OPC Data Access (DA) Specification; Version 2.05a

TELECOMMUNICATIONS INDUSTRY ASSOCIATION (TIA)

TIA J-STD-607	(2002a) Commercial Building Grounding (Earthing) and Bonding Requirements for Telecommunications
TIA-568-C.1	(2009; Add 2 2011; Add 1 2012) Commercial Building Telecommunications Cabling Standard
TIA/EIA-606	(2002a; Errata 2007; R 2007; Adm 1 2008) Administration Standard for the Telecommunications Infrastructure

TRIDIUM, INC (TRIDIUM)

Niagara Framework	(2012) NiagaraAX User's Guide
Tridium Open NiCS	(2005) Understanding the NiagaraAX Compatibility Statement (NiCS)

U.S. FEDERAL COMMUNICATIONS COMMISSION (FCC)

FCC EMC	(2002) FCC Electromagnetic Compliance Requirements
FCC Part 15	Radio Frequency Devices (47 CFR 15)

UNDERWRITERS LABORATORIES (UL)

UL 60950	(2000; Reprint Oct 2007) Safety of Information Technology Equipment

1.3 DEFINITIONS

The following list of definitions may contain terms not found elsewhere in this Section but are included here for completeness. Some terms are followed with a protocol reference in parenthesis (for example: (BACnet)) indicating to which protocol the term and definition applies.

1.3.1 Alarm Generation

The process of comparing a point value (the point being alarmed) with a pre-defined alarm condition (e.g. a High Limit) and performing some action based on the result of the comparison.

1.3.2 Advanced Metering Infrastructure (AMI)

AMI is the monitoring of utility metering for both billing and operations functions. AMI Meters (electricity, gas, steam, and water) installed in the NAVFAC PWD in 2014 under the ARRA funded regional project all report their data over a separate wireless (AMI) network and not over the ICS network. The two networks are distinct and are not currently interconnected.

1.3.3 Alarm Handling

see Alarm Routing

1.3.4 Alarm Routing

Alarm routing is M&C software functionality that starts with a notification that an alarm exists (typically as the output of an Alarm Generation process) and sends a specific message to a specific alarm recipient or device.

1.3.5 BACnet

The term BACnet is used in two ways. First meaning the BACnet Protocol Standard - the communication requirements as defined by ASHRAE 135 including all annexes and addenda. The second to refer to the overall technology related to the ASHRAE 135 protocol.

1.3.6 BACnet Interoperability Building Blocks (BIBBs) (BACnet)

A BIBB is a collection of one or more BACnet services intended to define a higher level of interoperability. BIBBs are combined to build the BACnet functional requirements for a device in a specification. Some BIBBs define additional requirements (beyond requiring support for specific services) in order to achieve a level of interoperability. For example, the BIBB DS-V-A (Data Sharing-View-A), which would typically be used by an M&C client, not only requires the client to support the ReadProperty Service, but also provides a list of data types (Object / Properties) which the client must be able to interpret and display for the user.

1.3.7 BACnet Testing Laboratories (BTL)(BACnet)

Established by BACnet International to support compliance testing and interoperability testing activities and consists of BTL Manager and the BTL Working Group (BTL-WG). BTL also publishes Implementation Guidelines.

1.3.8 BACnet Testing Laboratories (BTL) Listed (BACnet)

A device that has been certified by BACnet® Testing Laboratory. Devices may be certified to a specific device profile, in which case the certification indicates that the device supports the required capabilities for that profile, or may be certified as "other".

1.3.9 Binary

A two-state system or signal; for example one where an "ON" condition is represented by a high signal level and an "OFF" condition is represented by a low signal level. 'Digital' is sometimes used interchangeably with 'binary'.

1.3.10 Binding (LonWorks)

The act of establishing communications between CEA-709.1-C devices by associating the output of a device to the input of another so that information is automatically (and regularly) sent without being requested by the recipient.

1.3.11 Broadcast

Unlike most messages, which are intended for a specific recipient device, a broadcast message is intended for all devices on the network.

1.3.12 Building Control Network (BCN)

The network used by the Building Control System. Typically the BCN is a BACnet ASHRAE 135 or LonWorks CEA-709.1-C network installed by the building control system contractor.

1.3.13 Building Control System (BCS)

One type of Field Control System. A control system for building electrical and mechanical systems, typically HVAC (including central plants) and lighting. A BCS generally uses Direct Digital Control (DDC) Hardware.

1.3.14 Building Point of Connection (BPOC)

A FPOC for a Building Control System. (This term is being phased out of use in preference for FPOC but is still used in some specifications and criteria.)

1.3.15 Clearance

Security Clearance

1.3.16 Control Logic Diagram

A graphical representation of control logic for multiple processes that make up a system.

1.3.17 Facility Point Of Connection (FPOC)

The FPOC is the point of connection between the ICS IP Network and the field control network (either an IP network, a non-IP network, or both). The hardware at this location which provides the connection is generally one of a control protocol router, a control protocol gateway, or an IT device such as a switch, IP router, or firewall.

In general, the term "FPOC Location" means the place where this connection occurs, and "FPOC Hardware" means the device that provides the connection. Sometimes the term "FPOC" is used to mean either and its actual meaning (i.e. location or hardware) is determined by the context in which it is used.

1.3.18 Field Control Network

The network used by a field control system.

1.3.19 Field Control System (FCS)

A building control system or utility control system.

1.3.20 Fox Protocol (Niagara Framework)

The protocol used for communication between components in the Niagara Framework. By default, Fox uses TCP port 1911

1.3.21 Gateway

A device that translates from one protocol to another. Devices that change only the transport mechanism of the protocol - "translating" from LonWorks over TP/FT-10 to LonWorks over IP for example - are not gateways as the underlying protocol (data format) does not change. Gateways are also called Communications Bridges or Protocol Translators.

1.3.22 Industrial Control System (ICS)

The NAVFAC PWD Industrial Control System is an integration of SCADA (Supervisory Control And Data Acquisition - for Utility System control) and DDC (Direct Digital Control - for Facility mechanical and electrical control) devices and the individual control systems, networks, field equipment, sensors and actuators that provide monitoring and control function for mechanical and electrical systems. All control systems are part of the ICS, whether part of a utility or a facility. AMI is part of the ICS program, but is not part of this guide specification.

1.3.23 Information Assurance (IA)

Information assurance is the practice of assessing and managing risks related to the use, processing, storage, and transmission of information or data and the systems and processes used for those purposes.

1.3.24 iSCSI

Internet Small Computer System Interface is an Internet Protocol (IP)-based storage networking standard for linking data storage facilities.

1.3.25 JACE (Niagara Framework)

Java Application Control Engine. Note: The Niagara Framework parent corporation Tridium's product line of supervisory controllers are called "JACE" so the term "JACE" should be avoided when discussing supervisory controllers/gateways generally.

1.3.26 LDAP

Lightweight Directory Access Protocol. LDAP is used to authenticate supervisory controllers and computers to the NAVFAC ICS Windows Domain.

1.3.27 LonMark International (LonWorks)

Standards committee consisting of independent product developers, system integrators and end users dedicated to determining and maintaining the interoperability guidelines for LonWorks. Maintains guidelines for the interoperability of CEA-709.1-C devices and issues the LonMark Certification for CEA-709.1-C devices.

1.3.28 LonWorks (LonWorks)

The term used to refer to the overall technology related to the CEA-709.1-C protocol (sometimes called "LonTalk"), including the protocol itself, network management, interoperability guidelines and products.

1.3.29 Modbus

A basic protocol for control network communications generally used in utility control systems. The Modbus protocol standard is maintained by The Modbus Organization.

1.3.30 Master-Slave/Token Passing (MS/TP)(BACnet)

Data link protocol as defined by the BACnet standard. Multiple speeds (data rates) are permitted by the BACnet MS/TP standard.

1.3.31 Monitoring and Control (M&C) Software

The ICS 'front end' software which performs supervisory functions such as alarm handling, scheduling and data logging and provides a user interface for monitoring the system and configuring these functions.

1.3.32 NAVFAC PWD CIO (CIO)

NAVFAC PWD CIO (CIO) is the authority having jurisdiction over all ICS IT (Information Technology) and OT (Operational Technology).

1.3.33 Network

The ICS is composed of Ethernet TCP/IP router-switch-and-cable network running over copper and fiber media, and serial networks running over a variety of media.

1.3.34 Network Variable (LonWorks)

See 'Standard Network Variable Type (SNVT)'.

1.3.35 Niagara N4 (Niagara Framework)

The current version (release) of the Niagara Framework. While it is often used to refer to just the front end, it includes all components of the Niagara Framework. (Note: The previous version of the Niagara Framework is "AX".)

1.3.36 Niagara Framework (Also called "Niagara")

A set of hardware and software specifications for building and utility control owned by Tridium Inc. and licensed to multiple vendors. The Framework consists of front end (M&C) software, web based clients, field level control hardware, and engineering tools. While the Niagara Framework is not adopted by a recognized standards body and does not use an open licensing model, it is sufficiently well-supported by multiple HVAC vendors to be considered a de-facto Open Standard.

1.3.37 Override

To change the value of a point outside of the normal sequence of operation where this change has priority over the sequence. An override can be accomplished in one of two ways: the point itself may be Commandable and written to with a priority or there may be a separate point on the controller for the express purpose of implementing the override.

Typically this override is from the Industrial Control System (ICS) Monitoring and Control (M&C) Software. Note that this definition is not

standard throughout industry.

1.3.38 Point, Calculated

A value within the M&C Software that is not a network point but has been calculated by logic within the software based on the value of network points or other calculated points. Calculated points are sometimes called virtual points or internal points.

1.3.39 Point, Network

A value that the M&C Software reads from or writes to a field control network.

1.3.40 Polling

A requested transmission of data between devices, rather than an unrequested transmission such as Change-Of-Value (COV) or Binding where data is automatically transmitted under certain conditions.

1.3.41 Property (BACnet)

A BACnet Property - a data element associated with an Object. Different Objects have different Properties, for example an Analog Input Object has a Present_Value Property (which provides the value of the underlying hardware analog input), a High_Limit Property (which contains a high limit for alarming), as well as other properties.

1.3.42 Protocol Implementation Conformance Statement (PICS)(BACnet)

A document, created by the manufacturer of a device, which describes which potions of the BACnet standard are implemented by a given device.

1.3.43 Repeater

A device that connects two control network segments and retransmits all information received on one side onto the other.

1.3.44 Router(LonWorks)

A device that connects two channels and controls traffic between the channels by retransmitting signals received from one subnet onto the other based on the signal destination. Routers are used to subdivide a control network and to control bandwidth usage.

1.3.45 Router (BACnet)

A device that connects two or more BACnet networks and controls traffic between the networks by retransmitting signals received from one network onto another based on the signal destination. Routers are used to subdivide an internetwork and to control bandwidth usage.

1.3.46 SAAR-N Form (SAAR)

A System Authorization Access Request - Navy form and any required addendums. These forms are used to request ICS access and validate that an individual has the appropriate security clearance in place prior to performing any work related to the ICS. A SAAR form is also used to request a domain account for a new user.

1.3.47 Segment

A 'single' section of a control network that contains no repeaters or routers. There is generally a limit on the number of devices on a segment, and this limit is dependent on the topology/media and device type. For example, a TP/FT-10 segment with locally powered devices is limited to 64 devices, and a BACnet MS/TP segment is limited to 32 devices.

1.3.48 Service (BACnet)

A BACnet Service. A defined method for sending a specific type of data between devices. Services are always defined in a Client-Server manner, with a Client initiating a Service request and a Server Executing the Service. Some examples are ReadProperty (a client requests a data value from a server), WriteProperty (a client writes a data value to a server), and CreateObject (a client requests that a server create a new object within the server device).

1.3.49 Service Pin (LonWorks)

A hardware push-button on a device which causes the device to broadcast a message containing its Node ID and Program ID. This broadcast can also be initiated via software.

1.3.50 Standard BACnet Object/Property/Service (BACnet)

BACnet Objects, Properties, or Services that are standard Objects, Properties, or Services enumerated and defined in ASHRAE 135. Clause 23 of ASHRAE 135 defines methods to extend ASHRAE 135 to non-standard or proprietary information. Standard BACnet Objects/Properties/Services specifically exclude any vendor specific extensions.

1.3.51 Standard Network Variable Type (SNVT) (LonWorks)

Pronounced 'snivet'. A standard format type (maintained by LonMark International) used to define data information transmitted and received by the individual nodes. The term SNVT is used in two ways. Technically it is the acronym for Standard Network Variable Type, and is sometimes used in this manner. However, it is often used to indicate the network variable itself (i.e. it can mean "a network variable of a standard network variable type"). In general, the intended meaning should be clear from the context.

1.3.52 Supervisory Controller (Also called "SC")

A controller implementing a combination of supervisory logic (global control strategies or optimization strategies), scheduling, alarming, event management, trending, web services or network management. Note this is defined by use; many supervisory controllers have the capability to also directly control equipment. Supervisory controllers can also be gateways and typically are in a Niagara Framework-based ICS.

1.3.53 TP/FT-10 (LonWorks)

A Free Topology Twisted Pair network (at 78 kbps) defined by CEA-709.3. This is the most common media type for a CEA-709.1-C control network.

1.3.54 TP/XF-1250 (LonWorks)

A high speed (1.25 Mbps) twisted pair, doubly-terminated bus network defined by the LonMark Interoperability Guidelines. This media is typically used only as a backbone media to connect multiple TP/FT-10 networks.

1.3.55 VLAN

A virtual LAN is a group of hosts with a common set of requirements that communicate as if they were attached to the same broadcast domain, regardless of their physical location. A VLAN has the same attributes as a physical LAN, but it allows for end stations to be grouped together even if they are not located on the same network switch. The ICS network is divided into multiple VLANs, which include Administration, Utility systems, Facility systems and metering systems, printers, each type of server, workstations internal to the Operations Center, workstation external to Operations Center and more. Multiple VLANs are in use, and are subject to change by CIO.

1.4 SUBMITTALS

Government approval is required for submittals with a "G" designation; submittals not having a "G" designation are for information only. Submit the following in accordance with Section 01 33 00 SUBMITTAL PROCEDURES and TABLE 1: PROJECT SEQUENCING

Provide one copy of required paper and electronic submittals.

Drawings:
Provide drawings as PDF compatible files by e-mail and optical disk and each drawing on 11" x 17" paper. Provide navigational outline submittals in Microsoft Excel or Word format and graphic submittals in full pixel-for-pixel lossless resolution in a standard format such as .bmp, .psd, or .gif as appropriate for the specific graphic being submitted.

Where existing systems are being modified, shop drawings shall consist of edits to existing record drawings.

SD-02 Shop Drawings

ICS Contractor Design Drawings; G

Draft As-Built Drawings; G

Final As-Built Drawings; G

Final As-Built Drawings in hard copy and on CD-ROM in PDF and AutoCAD format.

Graphics, G

Provide graphics pages for the project at actual graphics resolution and format, including all common pieces of equipment, page backgrounds, and menu structures.

Also provide the entire station copy (including images, px pages, and the *.bog file) of the graphical user interface along with the administrative credentials.

SD-03 Product Data

Computer Software; G

The most recent versions of all computer software provided under this specification delivered as a Technical Data Package. The user manuals for all software delivered for this project shall be submitted with the software.

SD-06 Test Reports

Start-Up and Start-Up Testing Report;G

The Start-Up and Testing report may be submitted as a Technical Data Package.

PVT Phase I Report; G

Pre-Construction QC Checklist

Post-Construction QC Checklist; G

SD-10 Operation and Maintenance Data

Operation and Maintenance (O&M) Instructions; G

Two bound O&M Instructions and one copy of the Instructions in PDF format on CD-ROM. Bound Instructions shall be indexed and tabbed. Instructions in PDF form shall be a single PDF file, or multiple PDF files with a PDF file table of contents containing links to the other files O&M Instructions may be submitted as a Technical Data Package.

SD-11 Closeout Submittals

Closeout QC Checklist; G

1.5 PROJECT SEQUENCING

TABLE I: PROJECT SEQUENCING specifies the sequencing of submittals as specified in paragraph SUBMITTALS (denoted by an 'S' in the 'TYPE' column) and activities as specified in PART 3: EXECUTION (denoted by an 'E' in the 'TYPE' column).

a. Sequencing for submittals: The sequencing specified for submittals is the deadline by which the submittal must be initially submitted to the Government. Following submission there will be a Government review

period as specified in Section 01 33 00 SUBMITTAL PROCEDURES. If the submittal is not accepted by the Government, revise the submittal and resubmit it to the Government within 14 days of notification that the submittal has been rejected. Upon re-submittal there will be an additional Government review period. If the submittal is not accepted the process repeats until the submittal is accepted by the Government.

b. Sequencing for Activities: The sequencing specified for activities indicates the earliest the activity may begin.

c. Abbreviations: In TABLE I the abbreviation AAO is used for 'after approval of' and 'ACO' is used for 'after completion of'.

TABLE I. PROJECT SEQUENCING

ITEM	TYPE	DESCRIPTION	SEQUENCING (START OF ACTIVITY or DEADLINE FOR SUBMITTAL)
1	S	Design Drawings	
2	S	Product Data Sheets	
3	S	ICS IP Network Bandwidth Usage Estimate	
4	S	Pre-construction QC Checklist	
5	E	Install ICS	AAO #1 thru #4
6	E	Start-Up and Start-Up Testing	ACO #5
7	S	Post-Construction QC Checklist	
8	S	Computer Software	
9	S	Start-Up and Start-Up Testing Report	
10	S	Draft As-Built Drawings	
11	S	PVT Phase I Procedures	14 days before scheduled start of #12 and AAO #9
12	E	PVT Phase I	AAO #11 and #10
13	S	PVT Phase I Report	7 days ACO #12
14	S	O&M Instructions	AAO #9
15	S	Final As-Built Drawings	21 days AAO #13
16	S	Closeout QC Checklist	ACO #14

1.6 QUALITY CONTROL (QC) CHECKLISTS

The Contractor's Chief Quality Control (QC) Representative shall complete the QC Checklist in Appendix A, and shall submit the Pre-Construction QC Checklist, Post-Construction QC Checklist and Closeout QC Checklist as specified. The QC Representative shall verify each item in the Checklist and initial in the provided area to indicate that the requirement has been met. The QC Representative shall sign and date the Checklist prior to submission to the Government.

1.6.1 Standard Products

Provide material and equipment that are standard products of manufacturers regularly engaged in the manufacturing of such product, using similar materials, design and workmanship. The standard products (excluding software) shall have been in commercial or industrial use for 1 year prior to bid opening, unless otherwise approved by the Government. The 1-year use shall include applications of similarly sized equipment and materials used under similar circumstances. The 2-year experience must be satisfactorily completed by a product that has been sold on the commercial market through advertisements, manufacturers' catalogs, or brochures.

Provide materials and equipment that are manufacturer's products currently in production, and supported by a local service organization. Contractor supplied units of the same type of equipment shall be products of a single manufacturer. Each major component of equipment shall have the manufacturer's name and the model and serial number in a conspicuous place. Materials and equipment shall be new standard unmodified products of a manufacturer regularly engaged in the manufacturing of such products.

1.6.2 Contractor's Qualifications

The Contractor or subcontractor that will perform the work shall have completed at least three systems installations of the same type and design specified, that have successfully operated the required sequence of operation for at least one year. The installer shall represent a non territorially restricted Niagara channel. The successful bidder shall demonstrate to the owner via a product website dealer/contractor locator, that there are multiple contractors and vendors in the project geographic area to choose from. No exceptions to this requirement will be allowed.

The programmer responsible for programming the SC's shall have a minimum of 2 years experience in programming SC's for similar systems of the same manufacturer. Programmer shall have successfully completed the Niagara N4 Certification Training Course and be certified.

1.6.3 Support

Certified local technical support shall exist within 50 miles of the site.

1.6.4 Commissioning

The Contractor shall provide **third-party** commissioning of the Industrial Control System (ICS) installed by this project and the **third-party** Commissioning Agent shall create testing requirements as necessary to verify the installed ICS system meets the contract requirements.

1.7 SEQUENCES OF OPERATION

Program each NiagaraAX JACE server/controller/s, and ASC, PCU, device, etc., to perform the sequences of operation provided on the construction documents. Provide all necessary hardware on each piece of equipment in order for the equipment to perform the specified sequence and to meet the requirements of the point lists.

The Contractor shall be responsible for all control wiring connections, auxiliary devices and control wiring diagrams to complete the control system and attain the described sequence of operation.

1.8 DELIVERY, STORAGE, AND HANDLING

Stored products shall be protected from the weather, humidity and temperature variations, dirt and dust, and other contaminants, within the storage condition limits published by the equipment manufacturer.

1.9 OPERATION AND MAINTENANCE (O&M) INSTRUCTIONS

The ICS Operation and Maintenance Instructions shall include:

a. Procedures for the ICS system start-up, operation and shut-down.

b. Final As-Built drawings.

Qualified service organization list including points of contact with phone numbers.

e. Start-Up and Start-Up Testing Report.

f. Performance Verification Test (PVT) Procedures and Reports.

1.10 WARRANTY

The entire IAS and all ancillary equipment required for its operation shall be free from defects in workmanship and material under normal use and service. If within 12 months from the date of substantial completion the installed equipment is found to be defective in operation, workmanship or materials, the Contractor shall replace, repair or adjust the defect at no cost to the Owner.

The warranty period for work and systems of this project shall commence after written notification of Owner s final acceptance.

Corrective software modifications made during warranty service periods shall be updated on all user documentation and on user and manufacturer archived software disks.

The Owner reserves the right to make changes to the IAS during the Warranty Period. Such changes do not constitute a waiver of warranty. Contractor shall warrant parts and installation work regardless of any such changes made by Owner, unless the Contractor provides clear and convincing evidence that a specific problem is the result of such changes to the IAS.

At no cost to the Owner, during the Warranty Period, Contractor shall provide maintenance services for software including all current software updates, firmware and hardware products. Prior to the closeout of the warranty period, the IAS contractor shall meet with the owner s representative to address any questions or concerns and offer ongoing Software Maintenance Services to the owner.

1.11 RECOMMENDED DIVISION OF WORK

The Division 23, 26, and 33 contractors (when separate from the ICS contractor) shall be responsible for all controllers, control devices, control panels, controller programming, controller programming software, controller input/output and power wiring and controller network wiring. The design and installation of these systems are covered in Parts 3 and 4

of this RFPDivision 23, 26 and 33 UFGS'.

The ICS contractor shall be responsible for the SC, software and programming of the SC, the graphical user interface, development of all graphical screens, Web browser pages, setup of schedules, alarms, LonWorks network management and connection of the SC into the ICS network. The ICS contractor shall integrate all data, monitoring and control provided by the Division 23, 26 and 33 contractor devices and make it available onto the ICS network.

1.12 QUALITY ASSURANCE

Provide a Honeywell WEBs-Open or Tridium Vykon NiagaraAX Framework as the basis of the new IAS. The Contractor shall be fully certified in the development and customization of the NiagaraAX software.

All microprocessor based ASCs/PCUs control products used shall conform to BTL Certified Standards, and/or MODBUS communication standards.

The IAS and components shall be listed by Underwriters Laboratories (UL 916) as an Energy Management System.

Functionality and Completeness: Contractor shall furnish and install all hardware, software and programming necessary to provide a complete and functioning system as specified. Contractor shall include all hardware, software and programming not specifically itemized in these Specifications, which is necessary to implement, maintain, operate, and diagnose the system in compliance with these Specifications.

1.13 INSTALLER'S QUALIFICATIONS

Installer's Qualifications: The Contractor shall have a successful history in the design and installation of NiagaraAX based Integrated Automation Systems to provide web browser monitoring and control of BACnet, MODBUS and legacy field level devices. Contractor must demonstrate experience in IAS installations for not less than 5 years and in DDC installation projects with point counts equal to this Project and systems of the same character as this Project.

Installer's Experience with Proposed Product Line: Firms shall have specialized in and be experienced with the installation of the proposed product line for not less than one year from date of final completion on at least three (3) projects of similar size and complexity. Submittals shall document this experience with references. Provide evidence of Niagara TCP certification as part of the submittal process.

PART 2 PRODUCTS

2.1 MATERIALS

Use new products the manufacturer is currently manufacturing and selling for use in new installations. Do not use this installation as a product test site unless explicitly approved in writing by the Government.

The Contractor shall select software, materials and equipment that are compatible with the existing ICS system. If the Contractor incorporates equipment or devices which require software and programming tools different than those currently in use, the Contractor shall provide compatible software for every server, laptop and desktop workstation in

the existing ICS, any specialized training, and all ICS modifications or specialized programming needed to support the unique equipment.

Contractor shall utilize as few unique pieces of equipment as possible. Wherever possible, the Contractor shall utilize a typical piece of equipment in numerous locations.

2.1.1 Product Certifications

Computing devices, as defined in FCC Part 15, supplied as part of the ICS shall be certified to comply with the requirements of Class B computing devices.

2.1.2 Ownership of Proprietary Material

Project-specific software and documentation shall become the Government's property. This includes, but is not limited to: graphics, record drawings, database(s), application of programming code, and documentation.

2.1.3 General Requirements

Provide components that meet the following requirements:

a. Portions of the data communications equipment system installed in unconditioned spaces shall operate properly in an environment with ambient temperatures between +32 and 120 degrees F and ambient relative humidity between 10 percent and 90 percent noncondensing.

b. Components shall accept 100 to 125 volts AC (Vac), 60 Hz, single phase, three wire with a three-pronged, dedicated circuit outlet or be provided with a transformer to meet the component's power requirements.

c. The equipment shall meet the requirements of NFPA 70, UL 60950, NFPA 262, FCC EMC, and FCC Part 15.

2.1.4 Nameplates

Nameplates shall be laminated plastic and shall identify the function, network address, if applicable, and identifier of the device. Laminated plastic shall be at least 0.125 inch thick, white with black center core. Nameplates shall be a minimum of 1 by 3 inch with minimum 0.25 inch high engraved block lettering.

2.2 MANAGED ICS ETHERNET SWITCH

2.2.1 General

Provide with configurable session timeouts for each service such as SSH, Telnet, and TFTP; multi-level user passwords; support authentication for console access; SSH version2/SSL (128-bit encryption); support SNMPv3 with SHA Authentication Protocol and AES Privacy; enable/disable ports, MAC based port security, VLAN (802.1Q) to segregate and secure network traffic, RADIUS centralized password management, console timeout must be configurabel; FIPS 140-2 compliant; support multiple NTP server to synchronize time; compatible with Solar Winds Orion network performance monitoring (SolarWinds Network Configuration Manager SNMPv3), a login banner, and 56-bit encryption.

Provide two year manufacturer's warranty.

2.2.2 Software

Operating System Software shall allow plug and play operation and have automatic learning, negotiation and crossover detection and shall support MSTP 902.1Q-2005, RSTP (802.1w) and Enhanced Rapid Spanning Tree network fault recover (<5ms), SNMPv3 SHA Authentication Protocol, AES Privacy Protocol, Quality of Service (802.1p) for real time traffic, VLAN (802.1Q) with double tagging and GVRP support, Link aggregation (802.3ad), IGMP Snooping for multicast filtering, and provide port configuration, status, statistics, mirroring, and security.

Provide a switch which uses programming software provided by Cisco, GarrettCom, or RuggedCom.

2.2.3 Ports

Ports shall be non-blocking, store and forward switching, with long haul optics allow Gigabit distance up to 70km and multiple connector types. Gigabit fiber ports (ICS Fiber Switch only) shall be configured for SFP, and the Contractor shall provide an SFP transceiver for each SFP port.

All ports on each switch shall be fully populated with ports and/or transceivers in the switch configuration prior to commissioning. Provide a minimum of one spare ports of each type (fiber, copper) on each installed switch.

2.2.4 Types of Managed ICS Switches

2.2.4.1 Switches serving a Substation

Switch shall be ruggedized to support immunity to EMI and heavy electrical surges and the temperature and humidity environment commonly found in substation installations. Specifically switches shall comply with the following industry standards: IEEE 1613 Class 2 (electric utility substations) and IEC 61850-3 (electric utility substations).

2.2.4.2 Switches Located in Unconditioned Enclosures in Ambient Conditions

Switch shall be ruggedized to withstand minus 40 degrees Celsius to 85 degrees Celsius operating temperatures.

2.2.4.3 ICS Fiber Optics Switch

Switch shall have 24 SFP port capable of supporting 1000BASE-T, 1000BASE-SX, or 1000BASELX/LH Small-Form Factor Pluggable (SFP) optics.

Provide minimal of ICS Fiber Optics Switch with 6 SFP included. The SFP should be 1000BASE-LX (single mode), unless otherwise noted.

2.2.4.4 ICS DDC Switch

Switch shall have minimum of six (6) 10/100/100 Ethernet ports.

2.3 SUPERVISORY CONTROLLER AND GATEWAY (SC)

The SC shall provide the interface between the ICS network and the field control devices, and provide global supervisory control functions over the control devices connected to the SC.

2.3.1 Communication/Ports

All controllers shall have the appropriate RS485, RS232, FTT-10 and/or Ethernet ports as needed for the project scope. If only one Ethernet port is provided on the SC, provide an extra Ethernet port on the network switch.

2.3.2 Features

Use of a computer or a device with a non-embedded operating system is prohibited.

2.3.3 Required Functionality:

a. Sequencing and complex programming between the various device-level controllers and the head-end server
b. Real-time control of devices
c. Communicate directly in a peer-to-peer fashion with other SC's in the same or other buildings. "Polling" by a host to pass data is unacceptable.
d. Store data at 15 minute intervals for all hardware, software, calculated, command (trend only change in command) and proof points in the system for a minimum of 14 days.
e. All stored data shall be automatically submitted to the head-end server each day at a set time.
f. Function as the web server for the graphical user interface for that building.
g. Time synchronization
h. Integration of data from connected devices using Modbus, BACnet, LonWorks technology, or other technology through installed software driver(s).

2.3.4 Hardware Minimum Requirements:

a. 128MB of RAM
b. 250 MHz processor
c. Capacity: Controllers shall be sized to accommodate an additional 20% of the number of sub-level controllers and points identified in Part 3 of this RFP.
d. One port compatible with the field level control system to be integrated using this product.
e. Embedded operating system
f. Two Ethernet ports

2.3.5 Software, Protocols, and Drivers:

All software used to access the programming of managed devices shall have open licensing and not be restricted to only the installing vendor or manufacturer.

All SC's are required to have both Niagara and an embedded operating system.

Software included on the SC may include any of the following:

LonWorks
BACnet
Modbus

Other protocol drivers as needed
oBix
Fox
Java Virtual Machine
Tunnel service to allow programming of device level controllers by a person on a remote computer on the Ethernet network using the appropriate programming tool.
LDAP Support shall be integrated
Web services
Database services

2.3.6 Control Protocol Gateways

The Control Protocol Gateway shall perform bi-directional protocol translation between Niagara Framework and one of the following protocols: CEA-709.1-C, ASHRAE 135, Modbus, Fox protocol, and OPC DA.

All software required for gateway configuration shall be provided and licensed to the Government.

b. Gateways shall retain their configuration after a power loss of an indefinite time, and shall automatically return to their pre-power loss state once power is restored.

Gateways shall, in addition, meet all requirements specified (in the following subparagraphs) for each of the two protocols it translates.

2.3.6.1 Gateway for CEA-709.1

In addition to the requirements for all gateways, Gateways that use CEA-709.1-C shall meet the following requirements:

a. It shall allow bi-directional mapping of data in the Gateway to Standard Network Variable Types (SNVTs) according to the LonMark SNVT List.

b. Gateways communicating CEA-709.1-C over an IP network shall communicate in accordance with CEA-852-B.

c. It shall allow of its standard network variables (SNVTs) and support transmitting data using the "min, max, and delta" (throttling and heartbeat) methodology.

d. It shall provide the ability to label SNVTs.

e. It shall supply a LonMark external interface file (XIF) as defined in the LonMark XIF Guide for use with LNS tools and utilities.

f. It shall have a "service pin" which, when pressed, will cause the Gateway to broadcast its 48-bit NodeID and ProgramID over the network.

g. It shall provide a configurable self-documenting string.

2.3.6.2 Gateway for ASHRAE 135

In addition to the requirements for all gateways, Gateways that use ASHRAE 135 shall meet the following requirements:

a. It shall allow bi-directional mapping of data in the Gateway to

Standard Objects as defined in ASHRAE 135.

b. All ASHRAE 135 Objects shall have a configurable Object_Name Property.

c. It shall be BTL Listed.

d. Gateways communicating ASHRAE 135 over an IP network shall communicate in accordance with ASHRAE 135 Annex J.

e. Gateways communicating ASHRAE 135 to a field control systems shall support the DS-RP-A (Data Sharing–Read Property–A) BIBB and the DS-WP-A (Data Sharing–Write Property–A) BIBB.

f. Gateways communicating ASHRAE 135 to the M&C Software or to a BACnet Supervisory Controller shall support the DS-RP-B (Data Sharing–Read Property–B) BIBB for Objects requiring read access from the M&C Software and the DS-WP-B (Data Sharing–Write Property–B) BIBB for Objects requiring write access from the M&C Software

2.3.6.3 Gateway for Modbus

In addition to the requirements for all gateways, Gateways that use Modbus shall allow bi-directional mapping of data in the Gateway to Modbus registers using the four standard Modbus register types (Discrete Input, Coil, Input Register,and Holding Register). Gateways communicating Modbus to the M&C Software shall communicate via Modbus over TCP/IP.

2.3.6.4 Gateway for OPC

In addition to the requirements for all gateways, Gateways that use OPC DA shall allow bi-directional mapping of data in the Gateway using OPC DA tags and shall communicate over an IP network in accordance with OPC DA.

2.3.6.5 Gateway for DNP3

In addition to the requirements for all gateways, Gateways that use DNP3 shall allow bi-directional mapping of data in the Gateway to DNP3 object groups and variations as defined by IEEE 1815. Gateways communicating DNP3 over an IP network shall communicate in accordance with the LAN/WAN Networking volume of IEEE 1815.

2.3.6.6 Niagara Framework Gateway

Niagara Framework Gateway Hardware shall:

a. be direct digital control hardware.

b. have an unrestricted interoperability license and its Niagara Compatability Statement (NiCS) shall follow the Tridium Open NiCS Specification.

c. manage communications between a field control network and the Niagara Framework Monitoring and Control Software and between itself and other Niagara Framework Supervisory Controllers. Niagara Framework Supervisory Controller Hardware shall use Fox protocol for communication with other Niagara Framework Components.

d. be fully programmable using the Niagara Framework Engineering Tool and shall support the following:

(1) Time synchronization, Calendar, and Scheduling using Niagara Scheduling Objects

(2) Alarm generation and routing using the Niagara Alarm Service

(3) Trending using the Niagara History Service and Niagara Trend Log Objects

(4) Integration of field control networks using the Niagara Framework Engineering Tool

(5) Configuration of integrated field control system using the Niagara Framework Engineering Tool when supported by the field control system

provide access to field control network data and supervisory functions via web interface and support a minimum of 16 simultaneous users.

2.4 SOFTWARE

2.4.1 Niagara Framework Engineering Tool

The Niagara Framework Engineering Tool shall be Niagara Workbench or an equivalent Niagara Framework engineering tool software and shall:

a. have an unrestricted interoperability license and its Niagara Compatability Statement (NiCS) shall follow the Tridium Open NiCS Specification.

b. be capable of performing network configuration for Niagara Framework Supervisory Controllers and Niagara Framework Monitoring and Control Software.

c. be capable of programming and configuring for Niagara Framework Supervisory Controllers and Niagara Framework Monitoring and Control Software.

d. be capable of discovery of Niagara Framework Supervisory Controllers and all points mapped into each Niagara Framework Supervisory Controller and making these points accessible to Niagara Framework Monitoring and Control Software.

2.4.2 Monitoring and Control (M&C) Software

The Software shall be Niagara Framework N4 Web Supervisor and shall communicate with Niagara Framework field control systems using the Fox protocol. The M&C Software may support other field control protocols.

2.4.2.1 M&C Software License

The M&C Software shall be licensed as specified.

Web Clients: It shall support no less than 15 simultaneous web clients with no limit on the total number of web clients. It shall be capable of expansion to support no less than 25 simultaneous web clients.

c. Calculations: It shall support no less than one calculated point for every ten network points.

Alarming: It shall support the handling (routing) of alarms for no less than 10,000 points.

e. Trending: It shall support a minimum of 8,000 simultaneous trends.

f. Niagara Framework Open License: It shall have an unrestricted interoperability license and its Niagara Compatability Statement (NiCS) shall follow the Tridium Open NiCS Specification.

2.4.2.2 Supported Field Control Protocols

The M&C Software shall support field control protocols as follows:

a. The Software shall use the Niagara Framework and shall communicate with Niagara Framework Supervisory Controllers using the Fox protocol.

b. The M&C Software may, in addition, include drivers to other protocols.

2.4.2.3 Point Information

Every point, both network and internal, in the M&C Software shall contain the following fields:

a. Name: A configurable name used for identification of the point within the M&C Software. Refer to Appendix D for more information on NAVFAC PWD ICS Point Naming Conventions.

b. Description: A configurable description of no less than 80 alpha-numeric characters.

c. Value: A field containing the current point value.

d. Units: A field containing the engineering units.

e. Source: A field identifying the source of the point. For network points, this is generally the address or identification of the field device (for example, the Domain-Subnet-Node address for LonWorks field control devices or the DeviceID for BACnet devices).

2.4.2.4 Point Calculations

M&C software shall have capability of performing calculations and computing the value of a calculated point based on the values of two or more network points and calculated points. Mathematical operators shall include: addition, subtraction, multiplication, division, exponentiation (y^x, power), square root, reciprocal, natural logarithm, sin, cos, tan, arcsin, arccos, arctan, and parenthesis. Pi and e shall be available as constants for use in calculations.

2.4.2.5 Passwords

The M&C software shall provide user-based access control to M&C functionality. The M&C Software shall recognize at least 1,000 separate users and have at least 4 levels of user permissions covering a minimum of 20 permission groups.

Passwords shall not be displayed and shall not be logged. The system shall maintain a disk file on the server hardware logging all activity of

the system. This file shall maintain, as a minimum, a record of all operators logged onto the system, alarm acknowledgments, commands issued and all database modifications. If the file format is not plain ASCII text, provide a means to export or convert the file to plain ASCII text. The system shall provide a mechanism for archiving the log files for long term record storage.

2.4.2.6 Scheduling

a. The M&C software shall be capable of performing time synchronization and configuring Niagara Framework Schedule Objects in Niagara Framework Supervisory Controllers.

2.4.2.7 Alarms

a. The M&C software shall be capable of configuring alarms in Niagara Framework Supervisory Controllers using the Niagara Alarm Service.

b. The M&C software shall be capable of handling (routing) alarms received from a Niagara Framework Supervisory Controller.

c. The M&C software shall support Niagara Framework Alarm Classes.

The creation, modification, and handling (routing) of alarms shall be fully accessible and fully adjustable from the graphical user interface.

f. Alarm Data. Alarm data to be displayed and stored shall include:

(1) Identification of alarm including building, system (or sub-system), and device name.

(2) Date and time to the nearest second of occurrence.

(3) Alarm type:

(a) Unreliable: Indicates that the source device has failed due to the sensing device or alarm parameter being out-of-range or bad data.

(b) High Alarm.

(c) Low Alarm.

(4) Current value or status of the alarm point, including engineering units

(5) Alarm limits, including engineering units.

(6) Alarm priority.

(7) Alarm Message: A unique message with a field of at least 60 characters. Assignment of messages to an alarm shall be an operator editable function.

(8)Acknowledgement status of the alarm including the time, date and user of acknowledgement.

2.4.2.8 Trending

The M&C software shall be capable of using the Niagara history service to create, modify, upload and archive trend log objects in Niagara Framework Supervisory Controllers.

The M&C Software shall include a graphical display for trend configuration, creation and deletion accessible through the graphical user interface. Each trend shall be user-configurable for:

a. Point to trend.

b. Sampling interval shall be adjustable between 1 second and 1 hour.

c. Start and Stop Time of Trend: Start and stop times shall be determined by one or more of the following methods:

(1) Start time and stop time

(2) Start time and duration

(3) Start time and number of samples

The M&C software shall be capable of displaying and printing a graphical representation of each trend, and of multiple trended points on the same graph. The software shall be capable of saving trend logs to a file. If the file format is not plain ASCII text in a Comma-Separated-Value (CSV) format, provide a means to export or convert the file to plain ASCII text in a CSV format.

2.5 UNINTERRUPTIBLE POWER SUPPLY (UPS)

A UPS is an IA requirement.

Equipment connected to the UPS shall not be affected in any manner by a power outage of a duration less than the rated capacity of the UPS. UPS shall be complete with all necessary power supplies, transformers, batteries, and accessories and shall include visual indication of normal power operation, UPS operation, abnormal operation and visual and audible indication of AC input loss and low battery power.

a. UPS shall support the connected load for at least a minimum runtime of 20 minutes.
b. UPS shall have 445 Joules of surge protection.
c. UPS shall be default to a power-on mode following each power outage.
d. UPS status shall be integrated into the SC.
e. UPS shall support the SC, Ethernet switchh(es), and other system components as feasible.

2.6 LOCKED RACKS AND ENCLOSURES

A locked enclosure or rack is an IA requirement.

The enclosure shall be securely attached, and keying of the lock shall match that currently in use at the installation. The door of the enclosure shall have an intrusion detection sensor, and this sensor shall be integrated into the control system, and shall report alarms on open, and change of state. This point status shall be tracked in a Base-level Unit Summary screen.

Enclosures supplied as an integral (pre-packaged) part of another product are acceptable. Keys for lockable enclosures shall be furnished.

2.6.1 Locking Cabinet Rack

Nineteen inch (19") 6U wall-mount rack enclosure, lockable, with passive venting to house each installed switch and other Ethernet-connected equipment impacted by the project.

Passive venting shall provide adequate cooling to maintain the manufacturer's maximum thermal limitations for all installed equipment in the cabinet based on calculated total wattages and adequate convective cooling. Top mounted louvers without allowing for a bottom ventilation air circulation path are not allowed.

Racks shall be either aluminum or steel with bolted or welded construction. Steel equipment racks shall be painted with a flame-retardant paint. Guard rails shall be included with each equipment rack and have a copper grounding bar installed and grounded to the earth.

2.6.2 Locking Enclosure

Device enclosures located outdoors or in wet ambient conditions shall be mounted in rainproof (NEMA 3R) enclosures. Device enclosures located outdoors or in wet ambient conditions AND within 100 feet of waterfront shall be mounted in rain-tight corrosion-resistant (NEMA 4X) enclosures. Device enclosures used in conditioned space can be mounted in dust-protective (NEMA 1) enclosures.

2.7 ICS NETWORK

Cabling between the network transport point of presence and the facility shall be single mode fiber consisting of 24 pairs terminated in a patch panel using an LC connector, unless an LC connector is unavailable on the existing switch.

Cabling between the network switch and all IP-addressable devices shall have the following minimum physical and media access requirements:

Ethernet; IEEE standard 802.3
Cable: 100 Base-T, UTP-8 wire, category 6
Minimum throughput; 100 Mbps

2.8 PROGRAMMING SOFTWARE

For software used for controllers below the supervisory controller in the Building Control System and is not already existing on site, the Contractor shall provide 18736 copies of the software.

For software used to program and create graphical content on the supervisory controller and is not already existing on site, the Contractor shall provide 3 copies of the software to be installed on the ICS laptop pool at

The installed version of the programming software for each device shall be licensed to NAVFAC PWD CIO. Software shall be submitted on CD-ROM, and one hard copy and one electronic copy of the software user manual shall be submitted for each piece of software provided.

PART 3 EXECUTION

3.1 EXAMINATION

The Contractor shall become familiar with all details of the work, shall verify all dimensions in the field, and shall advise the Contracting Officer of any discrepancy before performing the work.

The Contractor shall carefully investigate the mechanical, electrical, and finish conditions that could affect the work to be performed, and shall furnish all work necessary to meet such conditions.

3.1.1 Existing Conditions Survey

Perform a field survey, including but not limited to testing and inspection of equipment to be part of the ICS and notify the Government if conditions at the project site are not as represented.. For field control systems to be integrated to the ICS which are not already connected to the ICS IP network, verify the availability of the building network backbone at the FPOC location, and verify that FPOCs shown as existing are installed at the FPOC location.

3.2 DRAWINGS AND CALCULATIONS

3.2.1 ICS Contractor Design Drawings

Revise and update the Contract Drawings to include details of the system design and all hardware components, including contractor provided and Government furnished components. Drawings shall be on ANSI B (11 by 17 inches) sheets. Details to be shown on the Design Drawing include:

a. The logical structure of the network, including but not limited to the location of all Control Hardware (including but not limited to each Control Protocol Gateway, Control Protocol Router, Niagara Framework Supervisory Controller and Monitoring and Control (M&C) Controller).

b. Manufacturer and model number for each piece of Computer Hardware and Control Hardware.

c. Physical location for each piece of Computer Hardware and Control Hardware.

d. Version and service pack number for all software and for all Control Hardware firmware.

3.2.2 As-Built Drawings

Prepare draft as-built drawings consisting of Points Schedule drawings for the entire ICS, including Points Schedules for each Gateway, and an updated Design Drawing including details of the actual installed system as it is at the conclusion of Start-Up and Start-Up Testing. As-Built Drawings shall include details of all hardware components, including contractor provided and Government furnished components. In addition to the details shown in the design drawings, the as-built drawing shall include:

a. Niagara Framework Station ID for all Niagara Framework components including but not limited to Niagara Framework Supervisory Controllers

and the N4 Web Supervisor.

Prepare Draft As-Built Drawings upon the completion of Start-Up and Start-Up Testing and Final As-Built Drawings upon completion of PVT Phase II.

3.3 INSTALLATION REQUIREMENTS

3.3.1 General

Install system components as shown and specified and in accordance with the manufacturer's instructions and provide necessary interconnections, services, and adjustments required for a complete and operable system. Communication equipment and cable grounding shall be installed as necessary to preclude ground loops, noise, and surges from adversely affecting system operation. Fiber Optic cables and wiring in exposed areas, including low voltage wiring but not including network cable in telecommunication closets, shall be installed in metallic raceways or EMT conduit as specified in Section 26 20 00 INTERIOR DISTRIBUTION SYSTEM. Do not install equipment in any space which experiences temperatures or humidity outside of the rated operating range of the equipment.

3.3.2 Isolation, Building Penetrations and Equipment Clearance

The ICS shall be completely installed and ready for operation, as specified and shown. Dielectric isolation shall be provided where dissimilar metals are used for connection and support. Penetrations through and mounting holes in the building exteriors shall be made watertight. Holes in concrete, brick, steel and wood walls shall be drilled or core drilled with proper equipment; conduits installed through openings shall be sealed with materials which are compatible with existing materials. Openings shall be sealed with materials which meet the requirements of NFPA 70 and SECTION 07 84 00 FIRESTOPPING.

3.3.3 Nameplates

Provide Nameplates for all Control Hardware and all Computer Hardware. Attach Nameplates to the device in a conspicuous location.

3.3.4 ICS Network Connection

The Contractor shall provide all equipment and materials needed to complete the connection to the NAVFAC ICS network, however only authorized Government or BOSC service contractor personnel are allowed to complete the actual physical connection between the Contractor's installation and the government network. Provide two weeks' notice to the Contracting Officer when scheduling this connection and include it in the project's schedule.
NAVFAC PWD will identify to the Contractor the specific spare port they will be using on existing ICS network switches.

3.3.5 Installation Of Equipment

3.3.5.1 Wire and Cable Installation

System components and appurtenances shall be installed in accordance with NFPA 70, manufacturer's instructions and as shown. Necessary interconnections, services, and adjustments required for a complete and operable signal distribution system shall be provided. Components shall

be labeled in accordance with TIA/EIA-606. Penetrations in fire-rated construction shall be firestopped in accordance with Section 07 84 00 FIRESTOPPING. Conduits, outlets and raceways shall be installed in accordance with Section 26 20 00 INTERIOR DISTRIBUTION SYSTEM. Wiring shall be installed in accordance with TIA-568-C.1 and as specified in Section 26 20 00 INTERIOR DISTRIBUTION SYSTEM. Wiring, and terminal blocks and outlets shall be marked in accordance with TIA/EIA-606. Non fiber-optic cables shall not be installed in the same cable tray, utility pole compartment, or floor trench compartment with power cables. Cables not installed in conduit or raceways shall be properly secured and neat in appearance.

3.3.5.2 Grounding

Signal distribution system ground shall be installed in accordance with TIA J-STD-607 and Section 26 20 00 INTERIOR DISTRIBUTION SYSTEM. Equipment racks shall be connected to the electrical safety ground.

3.3.5.3 Power-Line Surge Protection

Equipment connected to ac circuits shall be protected against or withstand power-line surges. Equipment protection shall meet the requirements of IEEE C62.41. Fuses shall not be used for surge protection.

3.3.5.4 IP Addresses

For all Control Hardware requiring an IP address on the ICS IP Network, coordinate with the NAVFAC PWD CIO to obtain IP addresses. Requirements for this coordination are found in the Information Assurance portion of this UFGS.

3.3.5.5 Ethernet Switches

If more than one switch will be installed in the same location, each switch shall be linked by two 1,000 Mb connections utilizing link aggregation. Switches linking substations or to the Operations Centers shall be configured with dedicated dual 10 GB fiber connections utilizing link aggregation on two separate fiber paths into and out of each of the primary substations, capable of and configured to provide 20 GB service and automatic failover.

Ethernet switches located in Substations and water system buildings shall be tiered so that in the event one switch fails, the system will still share data through an alternate switch and data path, and connections shall be fault tolerant with dual path to each device including switches, relays and similar equipment that are available with 2 Ethernet ports.

3.3.5.6 Supervisory Controller(SC)

Provide one or more SC's as part of this contract. Number of controllers required is dependent on the type and quantity of devices installed.

Power supply shall be fused or current limiting and shall be rated at a minimum of 125% of SC power consumption.

Do not divide control of a single mechanical system such as an air handling unit, boiler, chiller, pump system, or terminal equipment between two or more controllers. A single controller shall manage control functions for a single mechanical system. It is permissible, however, to

manage more than one mechanical system with a single controller.

Multiplexing of points is not allowed.

3.3.5.7 Software Installation

3.3.5.7.1 Engineering Tool

Install the Niagara Framework Engineering Tool on the N4 Web Supervisor Server. The Niagara Framework Engineering Tool shall be installed on workstation hardware.

3.3.5.7.2 Monitoring and Control (M&C) Software Configuration

Configure the Monitoring and Control (M&C) Software as specified, as shown and as follows:

a. Set up M&C Software user accounts and passwords. Coordinate user accounts, passwords and permissions with the installation's BOSC or shop ICS supervisor.

b. Change the default password on all accounts.

c. Disable all ports, protocols, and network services other than those required or specifically permitted by this Section.

3.4 COORDINATION

Contractor shall keep Operations Center ICS personnel apprised of on-going activities and any expected impacts to normal operation. Impacts to normal operation are required to be requested and coordinated in advance.

3.4.1 Coordination With Division 23, 26 And 33 Contractors

Coordinate with Division 23, 26, and 33 Contractors (when separate from ICS contractor) supplying products or systems in order to integrate their work into the ICS. Specifically:

+ Coordinate type and quantity of SC's required for a complete installation.
+ Coordinate all ICS network schematic diagrams that include Division 23 or 26 work.
+ Coordinate all monitoring and control functions including scheduling, alarms, and the level of device/equipment controllability.
+ Coordinate and integrate all factory-installed controllers furnished with equipment (e.g., boiler control panels, chillers, packaged air-handling units) into the ICS communication architecture.
+ Coordinate compatibility of factory-installed controllers prior to shipment.
+ Coordinate specific maintenance timeframes and alarms for all new equipment requiring maintenance.

3.5 INTEGRATION

Install, initialize, start up, and troubleshoot operator interface software and functions (including operating system software, operator interface database, and third-party software installation and integration required for successful operator interface operation).

Contractor to integrate all control points including those associated with the sequence of operation, alarms and other data generated by field devices (whether controlling or reporting) that were specifically listed or named in the final approved shop drawings so that it is available on the ICS network.

Fully integrate the field control systems in accordance with the following three step sequence and as specified and shown.

STEP 1: Install and configure Control Hardware as necessary to provide a Field Point of Connection to connect the field control system to the ICS IP network and, when necessary, to provide control protocol translation and supervisory functionality.

STEP 2: Add Field Control System to M&C Software: Perform system discovery, system database merges, or any other actions necessary to allow M&C Software access to the field control system.

STEP 3: Configure M&C Software to provide monitoring and control of the field control system, including but not limited to the creation of system displays and the configuration of scheduling, alarming, and trending.

3.5.1 Integration Step 1: Install Control Hardware

Install Control Hardware as specified at the FPOC location to connect the field control system to the ICS IP network and, if necessary, to provide control protocol translation and supervisory functionality. Depending on the field control system media and protocol this shall be accomplished through one of the following:

a. Connect the field control network FPOC to the ICS IP network.

b. Install a Niagara Framework Supervisory Controller connected to both the field control network and the ICS IP network.

3.5.1.1 Installation of Niagara Framework Supervisory Controller

Install Niagara Framework Supervisory Controller hardware to connect the field control network to the ICS IP network. Install additional field control system network media and hardware as needed to connect the Niagara Framework Supervisory Controller to the field control system.

3.5.2 Integration Step 2: Add Field Control System to M&C Software

Perform system discovery, system database merges, or any other actions necessary to allow M&C Software access to points and data in the field control system.

3.5.2.1 Integration of Field Control Systems Via Niagara Framework

For each Niagara Framework Supervisory Controller installed in integration step 1 for this project do both of the following:

a. Use the Niagara Framework Engineering Tool to fully discover the field control system and make all field control system information available to the Niagara Framework Supervisory Controller.

b. Create and configure points and establish network communication between the Niagara Framework Supervisory Controller and the field control system to provide points from the field control system to the M&C software and to provide support for supervisory functions, including but not limited to schedule objects, trend logs and alarming.

For each Niagara Framework Supervisory Controller to be integrated as part of this project, make all information in the Niagara Framework Supervisory Controller available to the M&C Software.

3.5.3 Integration Step 3: Configure M&C Software

Configure M&C Software to provide monitoring and control of the field control system, including but not limited to the creation of system displays and the configuration of scheduling, alarming, and trending.

3.5.3.1 Configure M&C Software Communication

Create and configure points and establish network communication between M&C Software and Field Control Systems as specified to support M&C Software functionality:

a. Points on currently active displays shall be updated via polling as necessary to meet M&C Software display refresh requirements.

b. Points used for overrides shall be sent to the device receiving the override as shown on the Points Schedule.

3.5.3.2 Configure M&C Software Functionality

Configure M&C Software functionality as specified:

a. Create System Displays using the standardized displays in Appendices B and C. Label all points on displays with full English language descriptions. Configure user permissions for access to and executions of action using graphic pages. Coordinate user permissions with the BOSC or shop ICS supervisor.

b. Configure alarm handling.

c. Configure all field devices to routinely send their data to the SQL server via the historical data archiving server.

3.6 PROGRAMMING

Provide graphics as specified in Appendix B and Appendix C. Display on each equipment's graphic page all of the associated input and output points and relevant calculated points. Point information on graphics shall dynamically update.

In addition to providing a graphical user interface specific to this project installation, update the existing ICS graphical user interface pages to incorporate the new work associated with this project. This shall include: 1-line diagrams corresponding to those already in the system, updating the values on graphical screens where there is now new data (or improved data), show amps/watts/kVA and other relevant data into and out of each substation or utility site, control of devices previously just monitored, and update data to be added to unit summary screens, utility screens, and all other aspects of the ICS system that are impacted by this

project. See Appendix C for examples of existing screens.

System shall generate maintenance alarms when equipment exceeds adjustable runtime, equipment starts, or performance limits.

3.6.1 Supervisory Controller

Synchronize controller time clocks daily from the Windows domain servers where capable or from the Niagara servers in the Operations Center.

Monitor controller and I/O point operation. System shall annunciate controller failure and I/O point locking (manual overriding to a fixed value).

3.6.2 Generators

Design an appropriate graphical user interface in the Operations Center graphical user interface to support quickly and easily selecting which generator systems to bring online during an outage, and automatically select which circuit breakers or sectionalizing switches to open or close to best support the customers.

3.7 FIELD QUALITY CONTROL

Demonstrate compliance of the installed ICS components with the contract documents. Furnish personnel, equipment, instrumentation, and supplies necessary to perform testing. Ensure that tests are performed by competent employees of the system installer or the system manufacturer regularly employed in the testing and calibration of Industrial Control Systems.

All points shall work end-to-end. The Government may choose to witness the working of any and all points.

3.8 START-UP AND START-UP TESTING

Test all equipment and perform all other tests necessary to ensure the system is installed and functioning as specified. Prepare a Start-Up and Start-Up Testing Report documenting all tests performed and their results and certifying that the system meets the requirements specified in the contract documents.

3.9 PERFORMANCE VERIFICATION TEST (PVT)

3.9.1 PVT Procedures

Demonstrate compliance of the control system with the contract documents. Using test plans and procedures previously approved by the Government, demonstrate all physical and functional requirements of the project. Upon completion of PVT Phase I and as specified, prepare and submit the PVT Phase I Report documenting all tests performed during the PVT and their results. The PVT report shall include all tests in the PVT Procedures and any other testing performed during the PVT. Failures and repairs shall be documented with test results.

Where practical, create the field conditions for change of state for digital inputs and verify proper reporting at the control system interface.

The Contractor shall verify operation of systems in the specified failure

modes upon system failure or loss of power, and verify that systems return to ICS control automatically upon a resumption of ICS operation or return of power.

The Contractor shall verify that each graphical page implemented or modified in the project conforms to the graphical standards in this document, and that graphic page content (the controlled equipment/systems and their related values) correctly reflects the actual look, feel and operation of the equipment/systems, and that all content matches that approved by the Government during submittal review.

Application Software Operation Test: Test compliance of the application software for:

a. The ability to demonstrate seamless communications with the existing ICS servers at the Operations Center as well as direct connect via the Supervisory controller in the facility where the work is being accomplished.
b. Editing Control programs: Demonstrate the ability to edit the control program off line.
c. Reporting of alarm conditions: Cause alarm conditions for each alarm, and ensure that workstations receive the alarms.
d. Reporting trend and status reports: Demonstrate ability of software to receive and save trend and status reports.

3.9.2 Work Coordination

Schedule and arrange work to cause the least interference with the normal Government business and mission. In those cases where some interference may be essentially unavoidable, coordinate with the Government to minimize the impact of the interference, inconvenience, equipment downtime, interrupted service and personnel discomfort.

3.10 TRAINING

Provide training on any programming or configuration software provided as part of this project that is NOT already in use by Government or BOSC personnel..

Provide a training course schedule, syllabus, and training materials 14 days prior to the start of training for a designated staff of Government and maintenance contractor personnel. Furnish a qualified instructor who is factory-trained and experienced in presenting this material to conduct training courses for designated personnel in the maintenance and operation of the installed system.

Do not commence training until the software licensed to the Government has been installed and is operating on all the available installation ICS laptops.

APPENDICES	
A	QC Checklist
B	Graphical User Interface Standard Requirements
C	Graphical Page Content Examples
D	Point, Server & Rack Naming Conventions

APPENDICES	
E	Example Navigational Outline
F	Existing Installed Government Software

NOTE: Appendices B - F referenced can be accessed from the UFGS Graphics Table of Contents. TO DOWNLOAD UFGS GRAPHICS Go to http://www.wbdg.org/ccb/NAVGRAPH/graphtoc.pdf.

APPENDIX A

QC CHECKLIST		
This checklist is not all-inclusive of the requirements of this specification and should not be interpreted as such.		
This checklist is for (check one:)		
	Pre-Construction QC Checklist Submittal (Items 1-2)	( )
	Post-Construction QC Checklist Submittal (Items 1-6)	( )
	Close-out QC Checklist Submittal (Items 1-14)	( )
Instructions: Initial each item in the space provided (|____|) verifying that the requirement has been met.		
The following items shall be verified for Pre-Construction, Post-Construction and Closeout QC Checklist Submittals:		
1	Contractor Design Drawing Riser Diagram includes location and types of all Control Hardware and Computer Hardware.	|____|
2	M&C Software supports the Niagara Framework .	|____|
The following items shall be verified for Post-Construction and Closeout QC Checklist Submittal:		
3	Communication between the M&C Software and Niagara Framework field control systems uses only Fox protocol.	|____|
4	Connections to field control systems are via Niagara Framework Supervisory Controllers.	|____|
5	Computer workstations and servers are installed as shown on the ICS Riser Diagram.	|____|
6	(Only on software NOT previously used:))Training schedule and course attendee lists have been developed and coordinated with shops and submitted.	|____|
The following items shall be verified for Closeout QC Checklists Submittal:		
7	All points in field control systems have been discovered using the Niagara Framework Engineering Tool and are available at the M&C Software.	|____|
8	All software has been licensed to the Government.	|____|
9	M&C software monitoring displays have been created for all building systems, including all override and display points indicated on Points Schedule drawings.	|____|

QC CHECKLIST		
10	Final As-built Drawings accurately represent the final installed system.	|____|
11	Default trends have been set up (per Points Schedule drawings).	|____|
12	Scheduling has been configured at the M&C Software.	|____|
13	O&M Instructions have been completed and submitted.	|____|
14	(if providing:) Training courses have been completed.	|____|
_____	_____	
	(QC Representative Signature) (Date)	

3.11 SEQUENCES OF OPERATION

3.11.1 CONSTANT VOLUME AHU/RTU STAGED HEAT/COOL WITH ECONOMIZER

a. Constant Volume Air Handling Unit, 2-Stage Cooling, 2-Stage Heating, with Economizer Enabled from Outside Air Dry Bulb Temperature or Enthalpy

b. Constant Volume HVAC Unit Controller Software. The constant volume unit controller shall be configurable for air handlers with staged or analog heating and cooling, minimum or modulating economizer outside or mixing dampers, and enthalpy or dry bulb economizer changeover.

See Exhibit A and B

3.11.2 CONSTANT VOLUME AHU/RTU MODULATING HEAT/COOL WITH ECONOMIZER

a. Constant Volume Air Handling Unit, Chilled Water Cooling, Hot Water Heating, with Economizer Enabled from Outside Air Dry Bulb Temperature or Enthalpy.

b. Constant Volume HVAC Unit Controller Software. The constant volume unit controller shall be configurable for air handlers with staged or analog heating and cooling, minimum or modulating economizer outside or mixing damper dampers, and enthalpy or dry bulb economizer changeover.

See Exhibit C and D

3.11.3 UNIT VENTILATOR STAGED COOL MODULATING HEAT

a. Unit Ventilator, One Stage DX, Hot Water Heating, Single Speed Fan, with Economizer.

b. Unit Ventilator Controllers. The unit ventilator controllers shall be configurable for ASHRAE Cycles I, II, and III; chilled water or DX cooling; hot water, steam or electric heating; economizer or fixed minimum outside air.

See Exhibit E and F

3.11.4 FCU WITH STAGED OR MODULATING HEAT/COOL

a. Fan Coil Unit, Chilled Water Cooling, Hot Water Heating, with Wall Module

See Exhibit G and H

3.11.5 CHILLED CEILING WITH MODULATING HEATe

a. Chilled Ceiling Unit with Hot Water Radiation

b. Chilled Ceiling/Hot Water Radiation Controllers. The room temperature controller suitable for chilled water cooling and hot water, steam or electric heating.

See Exhibit I and J

3.11.6 COOLING ONLY VAV BOX

a. VAV Box, Cooling Only, Pressure Independent

See Exhibit K and L

3.11.7 VAV WITH STAGED REHEAT

a. VAV Box, Cooling & 2-Stage Electric Heat, Pressure Independent

See Exhibit M and N

3.11.8 VAV WITH MODULATING REHEAT

a. VAV Box, Cooling & Hot Water Heat, Pressure Independent

See Exhibit O and P

3.11.9 VAV PARALLEL FAN WITH MODULATING REHEAT

a. VAV Box, Cooling and Hot Water Heat, Parallel Fan, & Pressure Independent

See Exhibit Q and R

3.11.10 VAV SERIES FAN WITH MODULATING REHEAT

a. VAV Box, Cooling, Hot Water Heat, Series Fan, Pressure Independent

See Exhibit S and T

3.11.11 VARIABLE AIR VOLUME AHU/RTU MODULATING HEAT/COOL WITH ECONOMIZER

a. Variable Air Volume VAV Air Handling Unit, Chilled Water Cooling, Hot Water Heating, with Economizer Enabled from Outside Air Dry Bulb Temperature or Enthalpy.

b. Variable Air Volume HVAC Unit Controller Software. The variable air volume unit controller shall be configurable for air handlers with staged or analog heating and cooling, minimum or modulating economizer outside or mixing damper dampers, and enthalpy or dry bulb economizer

changeover.

See Exhibit U and V

-- End of Section --

EXHIBIT A

Drawing

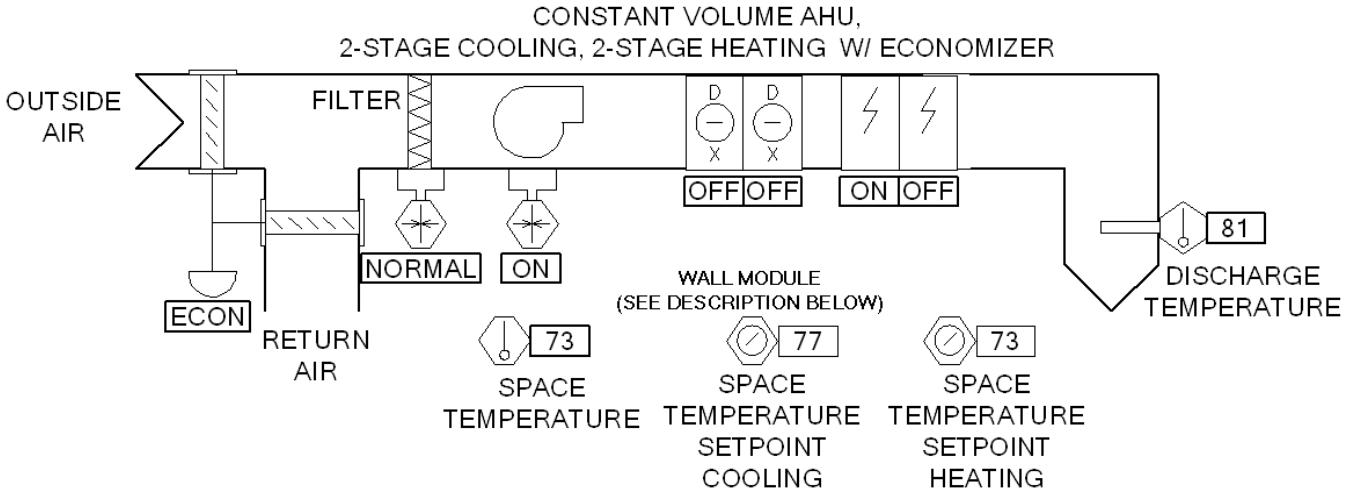

Fan Off.
Anytime the fan is off, all system heating and cooling shall be off, and the mixing dampers shall be positioned closed to the outside air. Mixing dampers shall spring-return closed to the outside air on power failure.

Fan and Mode Control.
System heating/cooling temperature set points shall be placed in the occupied, standby, or unoccupied mode of operation and controlled via an optimal start/stop system scheduler resident in the JACE controller. Prior to scheduled occupied periods, the equipment shall precondition the space to ensure occupied set point is achieved at the scheduled occupied time. The optimal start / stop schedule shall auto compensate for outdoor and indoor space temperature variations. When occupied the supply fan shall start and run continuously. (adjustable) During unoccupied and standby periods, the fan shall cycle on with heating or cooling demands accordingly to satisfy the unoccupied and standby temperature set points. The standby mode of operation is for periods of temporary vacancy and shall use owner determined standby temperature set points and can be triggered by local hardwired occupancy motion sensor or via network motion detection command from smart lighting control systems, communicating motion sensors, card access systems global load shed command or other EMS command.

System shall automatically revert to the proper mode of operation after restoration of power after a power failure.

Occupant Schedule Override Control.
During the unoccupied mode, each room temperature sensor wall module override button shall provide the room occupant with ability to place the system in the occupied mode of operation for 60 (adjustable) minutes. The occupant shall also have the ability to cancel the override command. The occupancy status shall be indicated on the wall module.

The fan shall be shut down anytime an unsafe condition exists at a manual reset hard-wired smoke detector located as required by codes.

Fan Fail Alarm.
Any time the fan is commanded on and the fan status current transducer does not detect fan operation during a 60 seconds alarm delay period, a fan

failure alarm shall be generated and sent to the operator station. All heating and cooling shall be locked out until fan operation status is proved.

Minimum Ventilation Control.
Anytime the fan runs in the occupied mode, the outside & return air mixing dampers shall modulate to outside air minimum position set point (3%) to introduce the minimum outside air required for building pressurization and minimum air changes.

Demand Controlled Ventilation.
When occupied, a local wall mounted C02 sensor shall reset the outdoor air minimum position from the minimum position toward the maximum ventilation position upon a rise of measured C02 concentration above the adjustable C02 set point. The inverse shall occur on a drop of measured Co2 concentration.

Temperature Control, Occupied Periods.
Subject to the fan status proof, heating and cooling control shall be staged and shall operate with minimum on and minimum off times to prevent short cycling and shall be subject to minimum and maximum discharge air temperature limit set points. If the scheduler commands the fan to stop during periods of heating, the heating stages shall be de-energized and the fan shall continue to run for 60 seconds to dissipate the residual heat prior to stopping air flow. A staging PID algorithm with heating and cooling anticipation features shall be employed for all staging control. Upon a drop in space temperature below the heating set point, the first heating stage shall be energized, the on-time proportional to the heating demand. After the first heating stage operates for a minimum inter-stage time, and upon a further increase in the heating demand, the next heating stage shall be cycled on, the on time proportional to the increasing demand. The inverse shall occur on a decrease in heating demand.
Upon a rise in space temperature above the cooling set point, the first cooling stage shall be energized, the on-time proportional to the cooling demand. After the first cooling stage operates for a minimum inter-stage time, and upon a further increase in the cooling demand, the next cooling stage shall be cycled on, the on time proportional to the increasing demand. The inverse shall occur on a decrease in cooling demand.

Mechanical cooling and heating are subject to the outdoor air heating and cooling lockout set points.

Anytime there is a cooling demand and the outside air temperature is suitable for economizing, the mixing dampers shall be modulated as the first cooling stage and shall maintain a 55F deg discharge air set point. Staged mechanical cooling and simultaneous economizer operation can occur to satisfy the cooling load.

If the space temperature drops or rises to either the heating or cooling unoccupied or standby temperature set points, the system shall start and operate in the heating or cooling mode accordingly until the heating or cooling demand has been satisfied. Outdoor fresh air minimum position shall be held to zero during these periods.

Discharge High, Low Limit.
If at any time during the heating or cooling operations the discharge air rises above or drops below the user defined discharge air temperature high or low limit set points, the corresponding heating or cooling stage(s) shall be cycled off to maintain safe operating parameters of the equipment.

Miscellaneous.
Anytime the pressure drop exceeds the clean setting as measured by a differential pressure switch piped across each unit’s filter, an alarm shall be generated and sent to the operator station.

Wall Sensor Module.
Wall temperature sensor module shall be located where shown on the plans, and shall include the temperature sensor, the occupied/unoccupied override selection push button with override status (where specified). The system owner determines the normal heating and cooling room temperature set point adjustment limits for all wall module sensors (such as 68F & 76F) as well as the maximum heating set point and minimum cooling set point (such as 70F & 72F). The local wall module set point adjustment shall give room occupants the ability to vary the local heating and cooling set points within these owner determined limits. Set points in use when the room is unoccupied or in standby modes shall not be affected the local user’s adjustments.

EXHIBIT B

System: AHU/RTU Staged HT/CL

EMS Point Name	Writable	Read Only	Alarm	Trend	Schedule	Global Control
User Defined Label	X					
SpaceTemp		X	X	X		
SupplyTemp		X	X	X		
C02_Sensor		X	X	X		
EffSetpoint		X				
EffOcc		X				
Status_mode		X				
Bypass	X					
FanCommand	X					
FanStatus		X		X		
FanFailureAlarm		X	X			
InManualState		X	X			
FrzStatAlarm		X	X			
SmokeDetAlarm		X	X			
HeatStage1	X					
HeatStage2	X					
CoolStage1	X					
CoolStage2	X					
HtStagesOn		X		X		
ClStagesOn		X		X		
Economizer	X			X		
OccCommand	X				X	
RecoveryActive	X				X	
TerminalLoad		X				
OccupiedCool	X					
StandbyCool	X					
UnoccupiedCool	X					
OccupiedHeat	X					
StandbyHeat	X					
UnoccupiedHeat	X					
MinimumCoolSp	X					
MaximumHeatSp	X					
MaxWallModSp	X					
MinWallModSp	X					
HeatLckOutSp	X					
CoolLckOutSp	X					
EconMinPosSp	X					
C02_Sp	X					
OaTempIn	X					X
EconEnableIn	X					X
ContinuousFanMode	X					

EXHIBIT C

Drawing

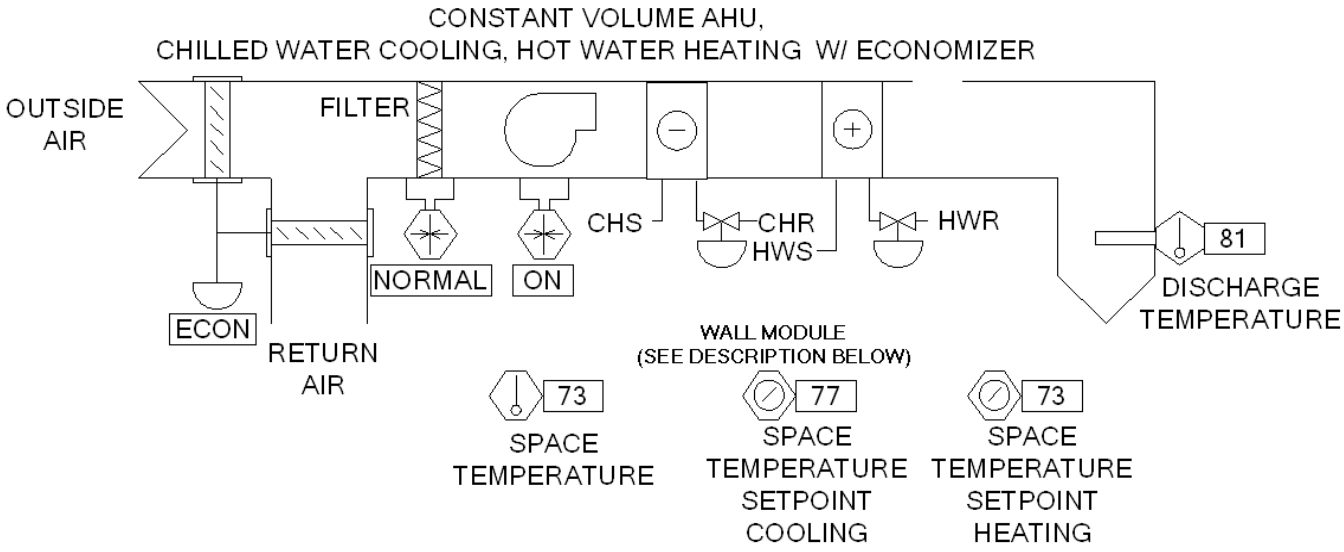

Fan Off.
Anytime the fan is off, all system heating and cooling shall be off, and the mixing dampers shall be positioned closed to the outside air. Mixing dampers shall spring-return closed to the outside air on power failure. The hot water valve shall maintain an adjustable off cycle minimum position (8%) when the outdoor temperature drops below 40F.
A manual reset serpentine freeze stat located on the hot water coil shall upon activating shall stop the fan, close the outdoor dampers and override the heating and cooling valves to full open position and an alarm shall be generated and sent to the operator station.

Fan and Mode Control.
System heating/cooling temperature set points shall be placed in the occupied, standby, or unoccupied mode of operation and controlled via an optimal start/stop system scheduler resident in the JACE controller. Prior to scheduled occupied periods, the equipment shall precondition the space to ensure occupied set point is achieved at the scheduled occupied time. The optimal start / stop schedule shall auto compensate for outdoor and indoor space temperature variations. When occupied the supply fan shall start and run continuously. (adjustable) During unoccupied and standby periods, the fan shall cycle on with heating or cooling demands accordingly to satisfy the unoccupied and standby temperature set points. The standby mode of operation is for periods of temporary vacancy and shall use owner determined standby temperature set points and can be triggered by local hardwired occupancy motion sensor or via network motion detection command from smart lighting control systems, communicating motion sensors, card access systems global load shed command or other EMS command.

System shall automatically revert to the proper mode of operation after restoration of power after a power failure.

Occupant Schedule Override Control.
During the unoccupied mode, each room temperature sensor wall module override button shall provide the room occupant with ability to place the system in the occupied mode of operation for 60 (adjustable) minutes. The occupant

shall also have the ability to cancel the override command. The occupancy status shall be indicated on the wall module.

The fan shall be shut down anytime an unsafe condition exists at a manual reset hard-wired smoke detector located as required by codes.

Fan Fail Alarm.
Any time the fan is commanded on and the fan status current transducer does not detect fan operation during a 60 seconds alarm delay period, a fan failure alarm shall be generated and sent to the operator station. All heating and cooling shall be locked out until fan operation status is proved.

Minimum Ventilation Control.
Anytime the fan runs in the occupied mode, the outside & return air mixing dampers shall modulate to outside air minimum position set point (3%) to introduce the minimum outside air required for building pressurization and minimum air changes.

Demand Controlled Ventilation.
When occupied, a local wall mounted C02 sensor shall reset the outdoor air minimum position from the minimum position toward the maximum C02 ventilation position upon a rise of measured C02 concentration above the adjustable C02 set point. The inverse shall occur on a drop of measured Co2 concentration.

Temperature Control, Occupied Periods.
Subject to the fan status proof, heating and cooling valves shall be modulated to satisfy the heating and cooling demands. When not heating or cooling, and central plant hot water is available, the hot water valve shall be modulated to maintain a discharge air tempering set point. A PID algorithm with heating and cooling anticipation features shall be employed for all modulating control. Upon a drop in space temperature below the heating set point, the heating valve shall be modulated in response to the increasing heating demand. The inverse shall occur on a decrease in heating demand. Upon a rise in space temperature above the cooling set point, the cooling valve shall be modulated in response to the increasing cooling demand. The inverse shall occur on a decrease in cooling demand.

Cooling and heating are subject to the central plant outdoor air heating and cooling lockout set points.

Anytime there is a cooling demand and the outside air temperature is suitable for economizing, the mixing dampers shall be modulated as the first cooling stage and shall maintain a 55F deg discharge air set point. Chilled water and simultaneous economizer operation can occur to satisfy the cooling load.

If the space temperature drops or rises to either the heating or cooling unoccupied or standby temperature set points, the system shall start and operate in the heating or cooling mode accordingly until the heating or cooling demand has been satisfied. Outdoor fresh air minimum position shall be held to zero during these periods.

Discharge Low Limit.
If at any time during the ventilation/circulation operations the discharge air drops below the user defined discharge air temperature low limit set point, the heating valve shall be modulated to maintain safe operating parameters of the equipment.

Miscellaneous.
Anytime the pressure drop exceeds the clean setting as measured by a differential pressure switch piped across each unit’s filter, an alarm shall be generated and sent to the operator station.

Wall Sensor Module.
Wall temperature sensor module shall be located where shown on the plans, and shall include the temperature sensor, the occupied/unoccupied override selection push button with override status (where specified). The system owner determines the normal heating and cooling room temperature set point adjustment limits for all wall module sensors (such as 68F & 76F) as well as the maximum heating set point and minimum cooling set point (such as 70F & 72F). The local wall module set point adjustment shall give room occupants the ability to vary the local heating and cooling set points within these owner determined limits. Set points in use when the room is unoccupied or in standby modes shall not be affected the local user’s adjustments.

EXHIBIT D

System: AHU-HW/CW

EMS Point Name	Writable	Read Only	Alarm	Trend	Schedule	Global Control
User Defined Label	X					
SpaceTemp		X	X	X		
SupplyTemp		X	X	X		
C02_Sensor		X	X	X		
EffSetpoint		X				
EffOcc		X				
Status_mode		X				
Bypass	X					
FanCommand	X					
FanStatus		X		X		
FanFailureAlarm		X	X			
InManualState		X	X			
FrzStatAlarm		X	X			
SmokeDetAlarm		X	X			
Economizer	X			X		
HotWaterValve	X			X		
ChilledWaterValve	X			X		
OccCommand	X				X	
RecoveryActive	X				X	
TerminalLoad		X				
OccupiedCool	X					
StandbyCool	X					
UnoccupiedCool	X					
OccupiedHeat	X					
StandbyHeat	X					
UnoccupiedHeat	X					
MinimumCoolSp	X					
MaximumHeatSp	X					
MaxWallModSp	X					
MinWallModSp	X					
HeatLckOutSp	X					
CoolLckOutSp	X					
EconMinPosSp	X					
C02_Sp	X					
SupplyAirTemperingSp	X					
OaTempIn	X					X
EconEnableIn	X					X
ContinuousFanMode	X					

EXHIBIT E

Drawing

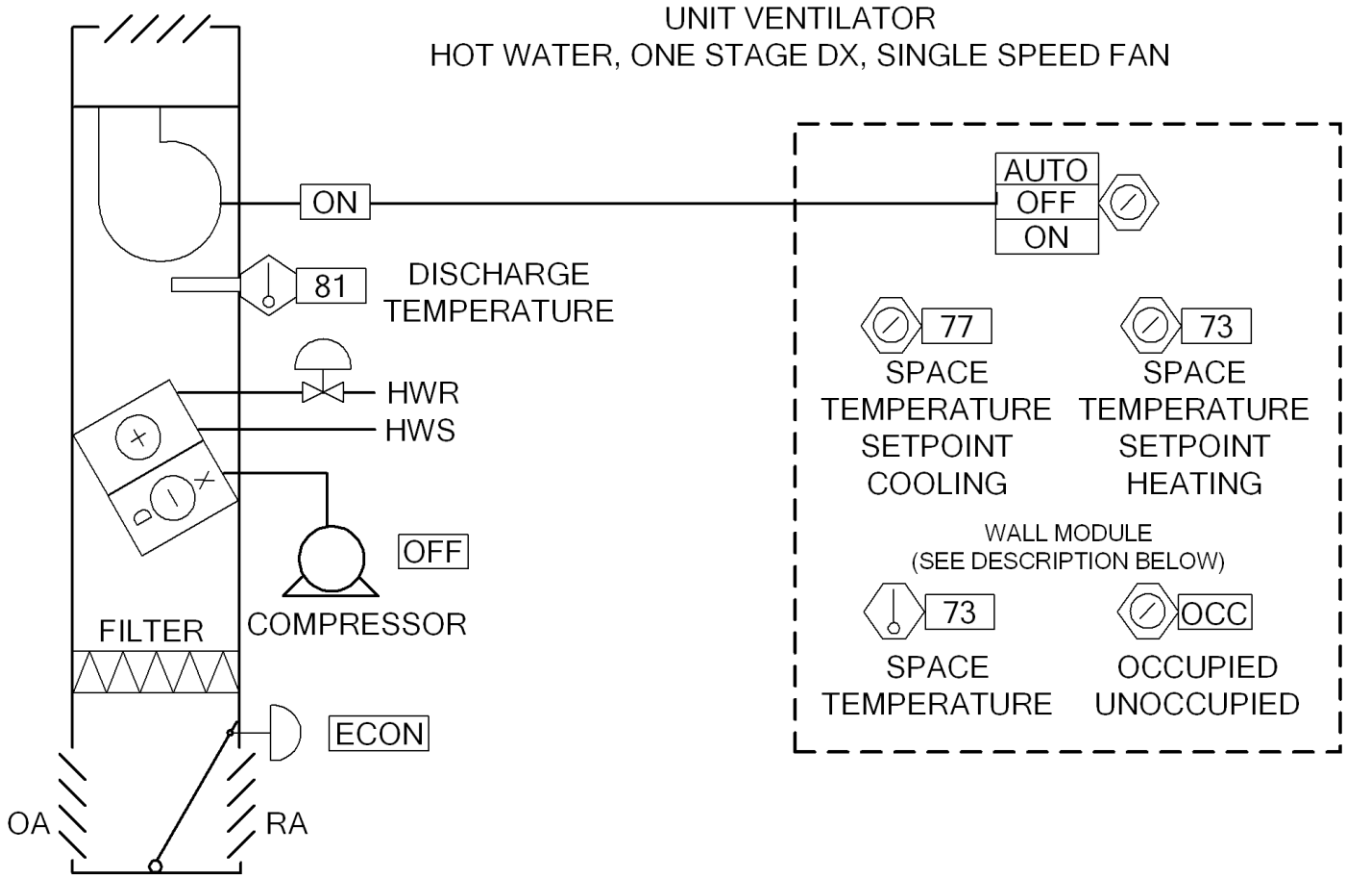

Fan Off.
Anytime the fan is off, all system heating and cooling shall be off, and the mixing dampers shall be positioned closed to the outside air. Mixing dampers shall spring-return closed to the outside air on power failure. The hot water valve shall maintain an adjustable off cycle minimum position (8%) when the outdoor temperature drops below 40F.
A manual reset serpentine freeze stat located on the hot water coil shall upon activating shall stop the fan, close the outdoor dampers and override the heating valve to full open position and an alarm shall be generated and sent to the operator station.

Fan and Mode Control.
System heating/cooling temperature set points shall be placed in the occupied, standby, or unoccupied mode of operation and controlled via an optimal start/stop system scheduler resident in the JACE controller. Prior to scheduled occupied periods, the equipment shall precondition the space to ensure occupied set point is achieved at the scheduled occupied time. The optimal start / stop schedule shall auto compensate for outdoor and indoor space temperature variations. When occupied the supply fan shall start and run continuously. (adjustable) During unoccupied and standby periods, the fan shall cycle on with heating or cooling demands accordingly to satisfy the unoccupied and standby temperature set points. The standby mode of operation

is for periods of temporary vacancy and shall use owner determined standby temperature set points and can be triggered by local hardwired occupancy motion sensor or via network motion detection command from smart lighting control systems, communicating motion sensors, card access systems global load shed command or other EMS command.

System shall automatically revert to the proper mode of operation after restoration of power after a power failure.

Occupant Schedule Override Control.
During the unoccupied mode, each room temperature sensor wall module override button shall provide the room occupant with ability to place the system in the occupied mode of operation for 60 (adjustable) minutes. The occupant shall also have the ability to cancel the override command. The occupancy status shall be indicated on the wall module.

Fan Fail Alarm.
Any time the fan is commanded on and the fan status current transducer does not detect fan operation during a 60 seconds alarm delay period, a fan failure alarm shall be generated and sent to the operator station. All heating and cooling shall be locked out until fan operation status is proved.

Minimum Ventilation Control.
Anytime the fan runs in the occupied mode, the outside & return air mixing dampers shall modulate to outside air minimum position set point (3%) to introduce the minimum outside air required for building pressurization and minimum air changes.

Demand Controlled Ventilation.
When occupied, a local wall mounted C02 sensor shall reset the outdoor air minimum position from the minimum position toward the maximum C02 ventilation position upon a rise of measured C02 concentration above the adjustable C02 set point. The inverse shall occur on a drop of measured Co2 concentration.

Temperature Control, Occupied Periods.
Subject to the fan status proof, heating valve and mechanical DX cooling shall be modulated and staged accordingly to satisfy the heating and cooling demands. The hot water valve shall be modulated to maintain a discharge air temperature tempering set point when not heating or cooling and central plant hot water is available. A PID algorithm with heating and cooling anticipation features shall be employed for all modulating and staged control. Upon a drop in space temperature below the heating set point, the heating valve shall be modulated in response to the increasing heating demand. The inverse shall occur on a decrease in heating demand.
Upon a rise in space temperature above the cooling set point, the mechanical DX cooling, subject to minimum on and off times, shall be staged in response to the increasing cooling demand. The inverse shall occur on a decrease in cooling demand.

Cooling and heating are subject to the outdoor air heating and cooling lockout set points.

Anytime there is a cooling demand and the outside air temperature is suitable for economizing, the mixing dampers shall be modulated as the first cooling stage and shall maintain a 55F deg discharge air set point. Mechanical DX cooling and simultaneous economizer operation can occur to satisfy the cooling load.

If the space temperature drops or rises to either the heating or cooling unoccupied or standby temperature set points, the system shall start and operate in the heating or cooling mode accordingly until the heating or cooling demand has been satisfied. Outdoor fresh air minimum position shall be held to zero during these periods.

Discharge Low Limit.
If at any time during the mechanical DX cooling operations the discharge air drops below the user defined DX discharge air temperature low limit set point, the cooling stage(s) shall be cycled off to maintain safe operating parameters of the equipment.
If at any time during the ventilation/circulation operations the discharge air drops below the user defined discharge air temperature low limit set point, the heating valve shall be modulated to maintain safe operating parameters of the equipment.

Miscellaneous.
Anytime the pressure drop exceeds the clean setting as measured by a differential pressure switch piped across each unit’s filter, an alarm shall be generated and sent to the operator station.

Wall Sensor Module.
Wall temperature sensor module shall be located where shown on the plans, and shall include the temperature sensor, the occupied/unoccupied override selection push button with override status (where specified). The system owner determines the normal heating and cooling room temperature set point adjustment limits for all wall module sensors (such as 68F & 76F) as well as the maximum heating set point and minimum cooling set point (such as 70F & 72F). The local wall module set point adjustment shall give room occupants the ability to vary the local heating and cooling set points within these owner determined limits. Set points in use when the room is unoccupied or in standby modes shall not be affected the local user’s adjustments.

EXHIBIT F

System: UV-HW/DX

EMS Point Name	Writable	Read Only	Alarm	Trend	Schedule	Global Control
User Defined Label	X					
SpaceTemp		X	X	X		
SupplyTemp		X	X	X		
C02_Sensor		X	X	X		
EffSetpoint		X				
EffOcc		X				
Status_mode		X				
Bypass	X					
FanCommand	X					
FanStatus		X		X		
FanFailureAlarm		X	X			
InManualState		X	X			
FrzStatAlarm		X	X			
Economizer	X			X		
HotWaterValve	X			X		
CoolStage1	X			X		
OccCommand	X				X	
RecoveryActive	X				X	
TerminalLoad		X				
OccupiedCool	X					
StandbyCool	X					
UnoccupiedCool	X					
OccupiedHeat	X					
StandbyHeat	X					
UnoccupiedHeat	X					
MinimumCoolSp	X					
MaximumHeatSp	X					
MaxWallModSp	X					
MinWallModSp	X					
HeatLckOutSp	X					
CoolLckOutSp	X					
EconMinPosSp	X					
C02_Sp	X					
SupplyAirTemperingSp	X					
OaTempIn	X					X
EconEnableIn	X					X
ContinuousFanMode	X					

EXHIBIT G

Drawing

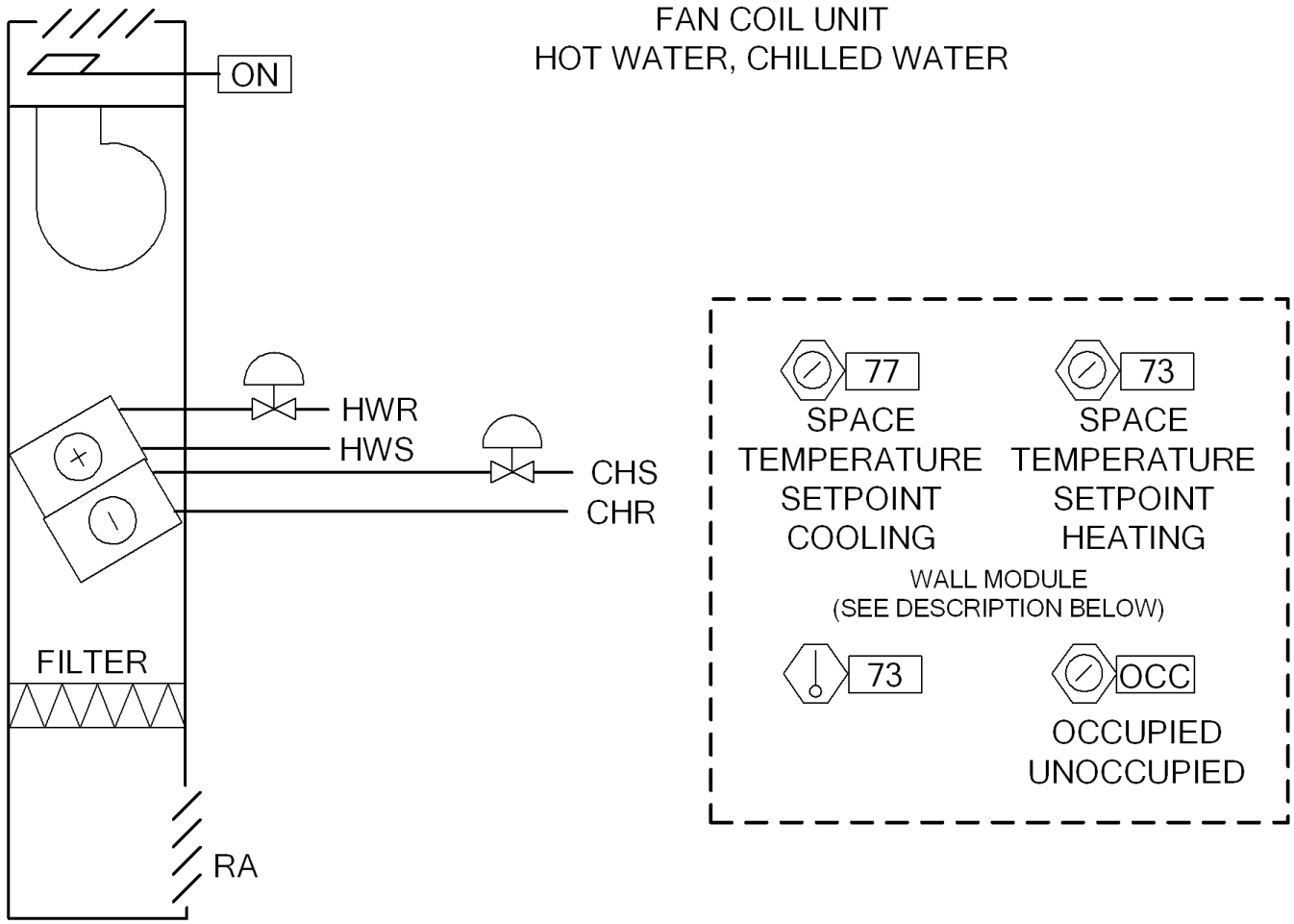

Fan Off.
Anytime the fan is off, all system heating and cooling shall be off.

Fan and Mode Control.
System heating/cooling temperature set points shall be placed in the occupied, standby, or unoccupied mode of operation and controlled via an optimal start/stop system scheduler resident in the JACE controller. Prior to scheduled occupied periods, the equipment shall precondition the space to ensure occupied set point is achieved at the scheduled occupied time. The optimal start / stop schedule shall auto compensate for outdoor and indoor space temperature variations. When occupied, unoccupied or in standby modes, the fan shall cycle on with heating or cooling demands accordingly to satisfy the unoccupied and standby temperature set points. The standby mode of operation is for periods of temporary vacancy and shall use owner determined standby temperature set points and can be triggered by local hardwired occupancy motion sensor or via network motion detection command from smart lighting control systems, communicating motion sensors, card access systems global load shed command or other EMS command.

System shall automatically revert to the proper mode of operation after restoration of power after a power failure.

Occupant Schedule Override Control.
During the unoccupied mode, each room temperature sensor wall module override button shall provide the room occupant with ability to place the system in the occupied mode of operation for 60 (adjustable) minutes. The occupant shall also have the ability to cancel the override command. The occupancy status shall be indicated on the wall module.

Temperature Control, Occupied Periods.
Heating and cooling valves shall be modulated or cycled in a two position manner to satisfy the heating and cooling demands. A PID algorithm with heating and cooling anticipation features shall be employed for all control. Upon a drop in space temperature below the heating set point, the heating valve shall be controlled in response to the increasing heating demand. The inverse shall occur on a decrease in heating demand.
Upon a rise in space temperature above the cooling set point, the cooling valve shall be controlled in response to the increasing cooling demand. The inverse shall occur on a decrease in cooling demand.

Cooling and heating are subject to the central plant outdoor air heating and cooling lockout set points.

If the space temperature drops or rises to either the heating or cooling unoccupied or standby temperature set points, the system shall start and operate in the heating or cooling mode accordingly until the heating or cooling demand has been satisfied.

Demand Controlled Ventilation.
When occupied, a local wall mounted C02 sensor shall be monitored by the associated zones dedicated Make Up Air Unit. Upon a rise of measured C02 concentration above the adjustable C02 set point, the central MAU shall increase VFD speed and the percentage of MAU supplied outdoor air accordingly in response to Co2 concentrations. The inverse shall occur on a drop of measured Co2 concentration.

Wall Sensor Module.
Wall temperature sensor module shall be located where shown on the plans, and shall include the temperature sensor, the occupied/unoccupied override selection push button with override status (where specified). The system owner determines the normal heating and cooling room temperature set point adjustment limits for all wall module sensors (such as 68F & 76F) as well as the maximum heating set point and minimum cooling set point (such as 70F & 72F). The local wall module set point adjustment shall give room occupants the ability to vary the local heating and cooling set points within these owner determined limits. Set points in use when the room is unoccupied or in standby modes shall not be affected the local user’s adjustments.

EXHIBIT H

System: FCU

EMS Point Name	Writable	Read Only	Alarm	Trend	Schedule	Global Control
User Defined Label	X					
SpaceTemp		X	X	X		
SupplyTemp		X	X	X		
C02_Sensor		X	X	X		
EffSetpoint		X				
EffOcc		X				
Status_mode		X				
Bypass	X					
FanCommand	X					
InManualState		X	X			
HotWaterValve	X			X		
ChilledWaterValve	X			X		
OccCommand	X				X	
TerminalLoad		X				
OccupiedCool	X					
StandbyCool	X					
UnoccupiedCool	X					
OccupiedHeat	X					
StandbyHeat	X					
UnoccupiedHeat	X					
MinimumCoolSp	X					
MaximumHeatSp	X					
MaxWallModSp	X					
MinWallModSp	X					
HeatLckOutSp	X					
CoolLckOutSp	X					
OaTempIn	X					X
ContinuousFanMode	X					

EXHIBIT I

Drawing

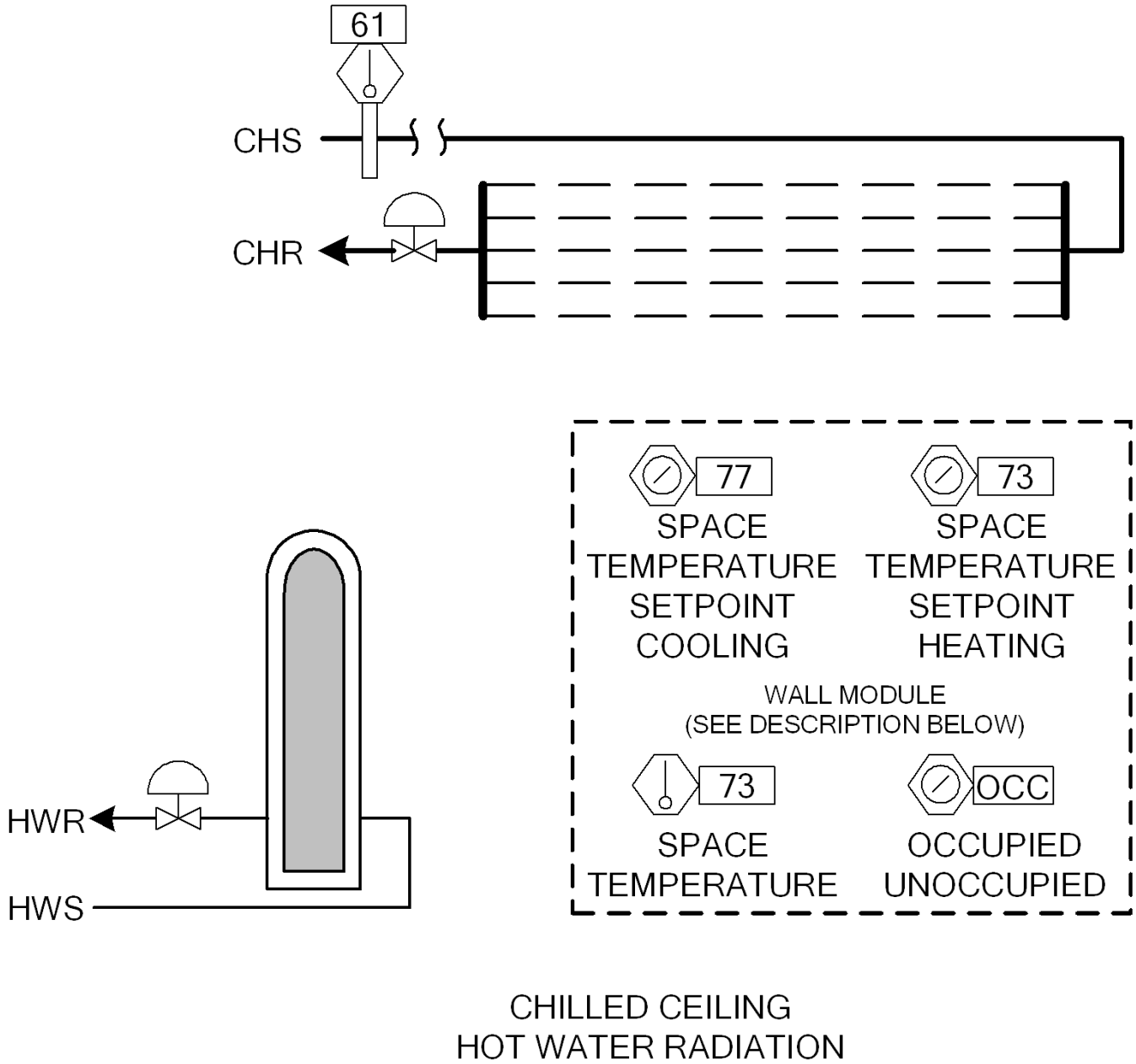

CHILLED CEILING
HOT WATER RADIATION

Mode Control.
System heating/cooling temperature set points shall be placed in the occupied, standby, or unoccupied mode of operation and controlled via an optimal start/stop system scheduler resident in the JACE controller. Prior to scheduled occupied periods, the equipment shall precondition the space to ensure occupied set point is achieved at the scheduled occupied time. The optimal start / stop schedule shall auto compensate for outdoor and indoor space temperature variations. When occupied, unoccupied or in standby modes, the heating or cooling shall modulate accordingly to satisfy the unoccupied and standby temperature set points. The standby mode of operation is for periods of temporary vacancy and shall use owner determined standby temperature set points and can be triggered by local hardwired occupancy motion sensor or via network motion detection command from smart lighting

control systems, communicating motion sensors, card access systems global load shed command or other EMS command.

System shall automatically revert to the proper mode of operation after restoration of power after a power failure.

Occupant Schedule Override Control.
During the unoccupied mode, each room temperature sensor wall module override button shall provide the room occupant with ability to place the system in the occupied mode of operation for 60 (adjustable) minutes. The occupant shall also have the ability to cancel the override command. The occupancy status shall be indicated on the wall module.

Temperature Control, Occupied Periods.
Heating and cooling valves shall be modulated to satisfy the heating and cooling demands. A PID algorithm with heating and cooling anticipation features shall be employed for all control. Upon a drop in space temperature below the heating set point, the heating valve shall be controlled in response to the increasing heating demand. The inverse shall occur on a decrease in heating demand.
Upon a rise in space temperature above the cooling set point, subject to the chilled beam dew point sensor, the cooling valve shall be controlled in response to the increasing cooling demand. The inverse shall occur on a decrease in cooling demand.
Dew point Control. If at any time the ceiling panel chilled water temperature drops below the owner determined panel dew point temperature, an alarm shall be generated and sent to the operator station and all ceiling panel valves shall close until the chilled water temperature recovers.

Cooling and heating are subject to the central plant outdoor air heating and cooling lockout set points.

If the space temperature drops or rises to either the heating or cooling unoccupied or standby temperature set points, the system shall operate in the heating or cooling mode accordingly until the heating or cooling demand has been satisfied.

Demand Controlled Ventilation.
When occupied, a local wall mounted C02 sensor shall be monitored by the associated zones dedicated Make Up Air Unit. Upon a rise of measured C02 concentration above the adjustable C02 set point, the central MAU shall increase VFD speed and the percentage of MAU supplied outdoor air accordingly in response to Co2 concentrations. The inverse shall occur on a drop of measured Co2 concentration.

Wall Sensor Module.
Wall temperature sensor module shall be located where shown on the plans, and shall include the temperature sensor, the occupied/unoccupied override selection push button with override status (where specified). The system owner determines the normal heating and cooling room temperature set point adjustment limits for all wall module sensors (such as 68F & 76F) as well as the maximum heating set point and minimum cooling set point (such as 70F & 72F). The local wall module set point adjustment shall give room occupants the ability to vary the local heating and cooling set points within these owner determined limits. Set points in use when the room is unoccupied or in standby modes shall not be affected the local user’s adjustments.

EXHIBIT J

System: Chilled Ceiling

EMS Point Name	Writable	Read Only	Alarm	Trend	Schedule	Global Control
User Defined Label	X					
SpaceTemp		X	X	X		
SpaceHumidity		X	X	X		
DewPoint		X	X	X		
PanelTemp		X	X	X		
C02_Sensor		X	X	X		
EffSetpoint		X				
EffOcc		X				
Status_mode		X				
Bypass	X					
InManualState		X	X			
HotWaterValve	X			X		
ChilledWaterValve	X			X		
OccCommand	X				X	
TerminalLoad		X				
OccupiedCool	X					
StandbyCool	X					
UnoccupiedCool	X					
OccupiedHeat	X					
StandbyHeat	X					
UnoccupiedHeat	X					
MinimumCoolSp	X					
MaximumHeatSp	X					
MaxWallModSp	X					
MinWallModSp	X					
HeatLckOutSp	X					
CoolLckOutSp	X					
OaTempIn	X					X
DewPointSp	X					
DewPointAlarm		X	X			

EXHIBIT K

Drawing

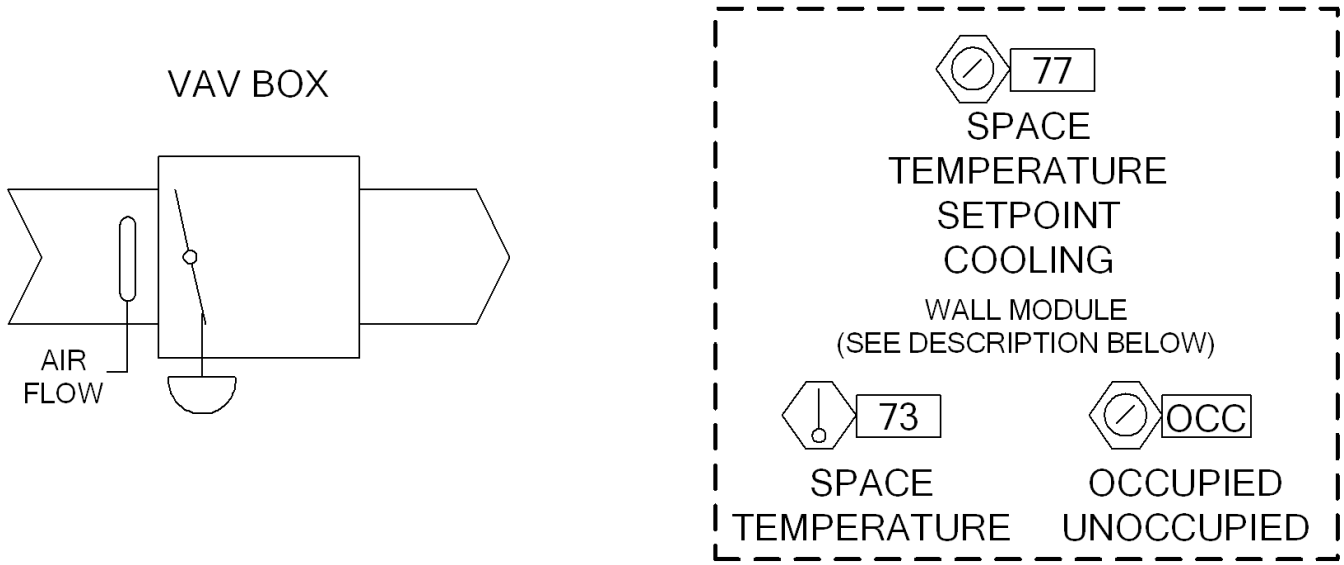

Mode Control.
System cooling temperature set points shall be placed in the occupied, standby, or unoccupied mode of operation and controlled via an optimal start/stop system scheduler resident in the JACE controller. Prior to scheduled occupied periods, the central VAV AHU equipment shall start and allow the VAVs to precondition the space to ensure occupied set point is achieved at the scheduled occupied time. The optimal start / stop schedule shall auto compensate for outdoor and indoor space temperature variations. A morning warm up command from the central VAV AHU shall force the VAV to maximum position and allow the central VAV AHU to precondition the space when heating is required.
During unoccupied periods, the central VAV AHU shall cycle on with heating or cooling demands accordingly to allow the VAVs to satisfy the unoccupied temperature set points. During unoccupied and standby periods, the VAV shall modulate in response to cooling demands accordingly to satisfy the unoccupied and standby temperature set points. The standby mode of operation is for periods of temporary vacancy and shall use owner determined standby temperature set points and can be triggered by local hardwired occupancy motion sensor or via network motion detection command from smart lighting control systems, communicating motion sensors, card access systems global load shed command or other EMS command.

System shall automatically revert to the proper mode of operation after restoration of power after a power failure.

Occupant Schedule Override Control.
During the unoccupied mode, each room temperature sensor wall module override button shall provide the room occupant with ability to place the system in the occupied mode of operation for 60 (adjustable) minutes. The occupant shall also have the ability to cancel the override command. The occupancy status shall be indicated on the wall module. The central VAV AHU shall monitor the VAVs and shall return to the occupied mode of operation anytime a VAV is placed in the override mode.

Temperature Control, Occupied Periods.

A PID algorithm shall be employed for all modulating control. The VAV primary air flow CFM set point shall be at the minimum air flow set point when occupied and there is no cooling or C02 ventilation demand. Upon a rise in space temperature above the cooling set point, the primary air flow set point shall be reset from minimum air flow set point to maximum air flow set point in response to the increasing cooling demand. The inverse shall occur on a decrease in cooling demand.

Central VAV AHU morning warm up mode is subject to the global outdoor air heating lockout.

If the space temperature rises to either the cooling unoccupied or standby temperature set points, the system shall operate in the cooling mode accordingly until the cooling demand has been satisfied.
Cooling mode is subject to conditioned primary air availability from the central VAV AHU.

Demand Controlled Ventilation.
When occupied, a local wall mounted C02 sensor shall reset the primary air flow set point from the minimum air flow set point toward the maximum air flow set point on a rise of measured C02 concentration above the adjustable C02 set point. The central VAV AHU shall monitor the associated VAVs and shall increase the percentage of AHU supplied outdoor air in response to VAV Co2 concentrations. The inverse shall occur on a drop of measured Co2 concentration.

Wall Sensor Module.
Wall temperature sensor module shall be located where shown on the plans, and shall include the temperature sensor, the occupied/unoccupied override selection push button with override status (where specified). The system owner determines the normal heating and cooling room temperature set point adjustment limits for all wall module sensors (such as 68F & 76F) as well as the maximum heating set point and minimum cooling set point (such as 70F & 72F). The local wall module set point adjustment shall give room occupants the ability to vary the local heating and cooling set points within these owner determined limits. Set points in use when the room is unoccupied or in standby modes shall not be affected the local user’s adjustments.

EXHIBIT L

System: VAV Cool Only

EMS Point Name	Writable	Read Only	Alarm	Trend	Schedule	Global Control
User Defined Label	X					
SpaceTemp		X	X	X		
C02_Sensor		X	X	X		
EffSetpoint		X				
EffOcc		X				
Status_mode		X				
Bypass	X					
InManualState		X	X			
BoxFlow		X		X		
EffBoxFlowSp		X				
DamperPosition		X		X		
OccCommand	X				X	
TerminalLoad		X				
OccupiedCool	X					
StandbyCool	X					
UnoccupiedCool	X					
OccupiedHeat	X					
StandbyHeat	X					
UnoccupiedHeat	X					
MinimumCoolSp	X					
MaximumHeatSp	X					
MaxWallModSp	X					
MinWallModSp	X					
C02_Sp	X					
BoxSizeSqFt	X					
Box_Kfactor	X					
MaxFlowSp	X					
MaxHeatFlowSp	X					
MinFlowSp	X					
BalancersCommand	X					
DmprRevRot	X					

EXHIBIT M

Drawing

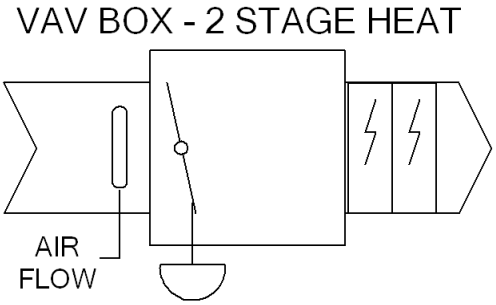

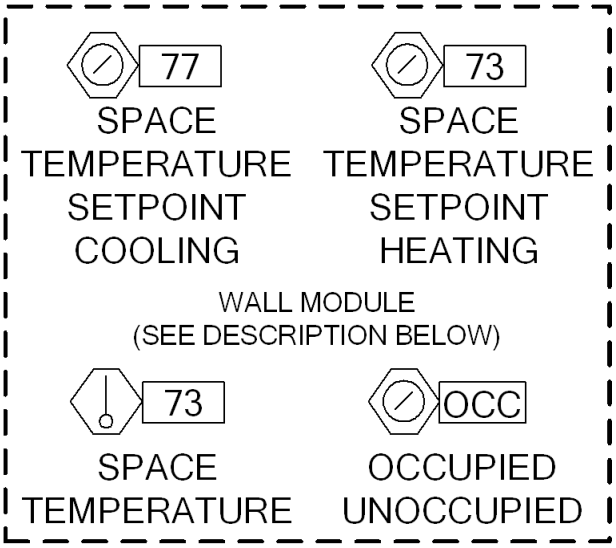

Mode Control.
System heating/cooling temperature set points shall be placed in the occupied, standby, or unoccupied mode of operation and controlled via an optimal start/stop system scheduler resident in the JACE controller. Prior to scheduled occupied periods, the central VAV AHU equipment shall start and allow the VAVs to precondition the space to ensure occupied set point is achieved at the scheduled occupied time. The optimal start / stop schedule shall auto compensate for outdoor and indoor space temperature variations. During unoccupied periods, the central VAV AHU shall cycle on with heating or cooling demands accordingly to allow the VAVs to satisfy the unoccupied temperature set points. During unoccupied and standby periods, the VAV shall modulate and stage in response to heating or cooling demands accordingly to satisfy the unoccupied and standby temperature set points. The standby mode of operation is for periods of temporary vacancy and shall use owner determined standby temperature set points and can be triggered by local hardwired occupancy motion sensor or via network motion detection command from smart lighting control systems, communicating motion sensors, card access systems global load shed command or other EMS command.

System shall automatically revert to the proper mode of operation after restoration of power after a power failure.

Occupant Schedule Override Control.
During the unoccupied mode, each room temperature sensor wall module override button shall provide the room occupant with ability to place the system in the occupied mode of operation for 60 (adjustable) minutes. The occupant shall also have the ability to cancel the override command. The occupancy status shall be indicated on the wall module. The central VAV AHU shall monitor the VAVs and shall return to the occupied mode of operation anytime a VAV is placed in the override mode.

Temperature Control, Occupied Periods.
A PID algorithm shall be employed for all modulating and staged control. The VAV primary air flow CFM set point shall be at the minimum air flow set point when occupied and there is no cooling, heating or C02 ventilation demand. Upon a drop in space temperature below the heating set point and when not locked out by a global heating outdoor air lockout command, the primary air

flow set point shall be reset toward the reheat air flow set point and the reheat shall be staged in response to the increasing heating demand, subject to the adjustable VAV box leaving air temperature high limit set point. The inverse shall occur on a decrease in heating demand. A factory provided, wired and installed air flow safety switch shall not permit electric heat operation without central AHU VAV primary air flow.
Upon a rise in space temperature above the cooling set point, the primary air flow set point shall be reset from minimum air flow set point to maximum air flow set point in response to the increasing cooling demand. The inverse shall occur on a decrease in cooling demand.

Heating mode is subject to the global outdoor air heating lockout.

If the space temperature drops or rises to either the heating or cooling unoccupied or standby temperature set points, the system shall operate in the heating or cooling mode accordingly until the heating or cooling demand has been satisfied. Cooling mode is subject to conditioned primary air availability from the central VAV AHU and heating mode is subject to global outdoor heating lock out set point and VAV AHU primary air flow.

Demand Controlled Ventilation.
When occupied, a local wall mounted C02 sensor shall reset the primary air flow set point from the minimum air flow set point toward the maximum air flow set point on a rise of measured C02 concentration above the adjustable C02 set point. The central VAV AHU shall monitor the associated VAVs and shall increase the percentage of AHU supplied outdoor air in response to VAV Co2 concentrations. The inverse shall occur on a drop of measured Co2 concentration.

Wall Sensor Module.
Wall temperature sensor module shall be located where shown on the plans, and shall include the temperature sensor, the occupied/unoccupied override selection push button with override status (where specified). The system owner determines the normal heating and cooling room temperature set point adjustment limits for all wall module sensors (such as 68F & 76F) as well as the maximum heating set point and minimum cooling set point (such as 70F & 72F). The local wall module set point adjustment shall give room occupants the ability to vary the local heating and cooling set points within these owner determined limits. Set points in use when the room is unoccupied or in standby modes shall not be affected the local user’s adjustments.

EXHIBIT N

System: VAV Staged-Reheat

EMS Point Name	Writable	Read Only	Alarm	Trend	Schedule	Global Control
User Defined Label	X					
SpaceTemp		X	X	X		
SupplyTemp		X	X	X		
C02_Sensor		X	X	X		
EffSetpoint		X				
EffOcc		X				
Status_mode		X				
Bypass	X					
InManualState		X	X			
ReHeatStage1	X			X		
ReHeatStage2	X			X		
BoxFlow		X		X		
EffBoxFlowSp		X				
DamperPosition		X		X		
OccCommand	X				X	
TerminalLoad		X				
OccupiedCool	X					
StandbyCool	X					
UnoccupiedCool	X					
OccupiedHeat	X					
StandbyHeat	X					
UnoccupiedHeat	X					
MinimumCoolSp	X					
MaximumHeatSp	X					
MaxWallModSp	X					
MinWallModSp	X					
C02_Sp	X					
BoxSizeSqFt	X					
Box_Kfactor	X					
MaxFlowSp	X					
MaxHeatFlowSp	X					
MinFlowSp	X					
BalancersCommand	X					
DmprRevRot	X					

EXHIBIT O

Drawing

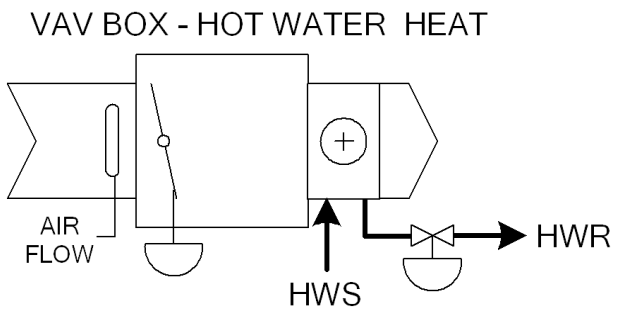

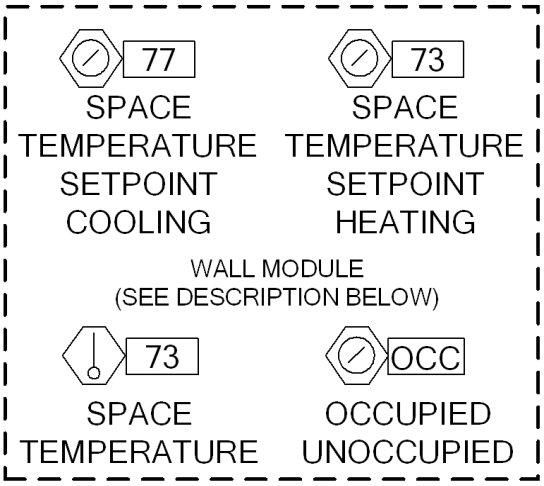

Mode Control.
System heating/cooling temperature set points shall be placed in the occupied, standby, or unoccupied mode of operation and controlled via an optimal start/stop system scheduler resident in the JACE controller. Prior to scheduled occupied periods, the central VAV AHU equipment shall start and allow the VAVs to precondition the space to ensure occupied set point is achieved at the scheduled occupied time. The optimal start / stop schedule shall auto compensate for outdoor and indoor space temperature variations. During unoccupied periods, the central VAV AHU shall cycle on with heating or cooling demands accordingly to allow the VAVs to satisfy the unoccupied temperature set points. During unoccupied and standby periods, the VAV shall modulate in response to heating or cooling demands accordingly to satisfy the unoccupied and standby temperature set points. The standby mode of operation is for periods of temporary vacancy and shall use owner determined standby temperature set points and can be triggered by local hardwired occupancy motion sensor or via network motion detection command from smart lighting control systems, communicating motion sensors, card access systems global load shed command or other EMS command.

System shall automatically revert to the proper mode of operation after restoration of power after a power failure.

Occupant Schedule Override Control.
During the unoccupied mode, each room temperature sensor wall module override button shall provide the room occupant with ability to place the system in the occupied mode of operation for 60 (adjustable) minutes. The occupant shall also have the ability to cancel the override command. The occupancy status shall be indicated on the wall module. The central VAV AHU shall monitor the VAVs and shall return to the occupied mode of operation anytime a VAV is placed in the override mode.

Temperature Control, Occupied Periods.
A PID algorithm shall be employed for all modulating control. The VAV primary air flow CFM set point shall be at the minimum air flow set point when occupied and there is no cooling, heating or C02 ventilation demand. Upon a drop in space temperature below the heating set point and when central plant hot water is available, the primary air flow set point shall be reset toward

the reheat air flow set point and the hot water reheat valve shall be modulated in response to the increasing heating demand. The inverse shall occur on a decrease in heating demand.
Upon a rise in space temperature above the cooling set point, the primary air flow set point shall be reset from minimum air flow set point to maximum air flow set point in response to the increasing cooling demand. The inverse shall occur on a decrease in cooling demand.

Heating mode is subject to the central plant outdoor air heating lockout.

If the space temperature drops or rises to either the heating or cooling unoccupied or standby temperature set points, the system shall operate in the heating or cooling mode accordingly until the heating or cooling demand has been satisfied. Cooling mode is subject to conditioned primary air availability from the central VAV AHU and heating mode is subject to central plant hot water availability.

Demand Controlled Ventilation.
When occupied, a local wall mounted C02 sensor shall reset the primary air flow set point from the minimum air flow set point toward the maximum air flow set point on a rise of measured C02 concentration above the adjustable C02 set point. The central VAV AHU shall monitor the associated VAVs and shall increase the percentage of AHU supplied outdoor air in response to VAV Co2 concentrations. The inverse shall occur on a drop of measured Co2 concentration.

Wall Sensor Module.
Wall temperature sensor module shall be located where shown on the plans, and shall include the temperature sensor, the occupied/unoccupied override selection push button with override status (where specified). The system owner determines the normal heating and cooling room temperature set point adjustment limits for all wall module sensors (such as 68F & 76F) as well as the maximum heating set point and minimum cooling set point (such as 70F & 72F). The local wall module set point adjustment shall give room occupants the ability to vary the local heating and cooling set points within these owner determined limits. Set points in use when the room is unoccupied or in standby modes shall not be affected the local user’s adjustments.

EXHIBIT P

System: VAV HW-Reheat

EMS Point Name	Writable	Read Only	Alarm	Trend	Schedule	Global Control
User Defined Label	X					
SpaceTemp		X	X	X		
SupplyTemp		X	X	X		
C02_Sensor		X	X	X		
EffSetpoint		X				
EffOcc		X				
Status_mode		X				
Bypass	X					
InManualState		X	X			
HotWaterValve	X			X		
BoxFlow		X		X		
EffBoxFlowSp		X				
DamperPosition		X		X		
OccCommand	X				X	
TerminalLoad		X				
OccupiedCool	X					
StandbyCool	X					
UnoccupiedCool	X					
OccupiedHeat	X					
StandbyHeat	X					
UnoccupiedHeat	X					
MinimumCoolSp	X					
MaximumHeatSp	X					
MaxWallModSp	X					
MinWallModSp	X					
C02_Sp	X					
BoxSizeSqFt	X					
Box_Kfactor	X					
MaxFlowSp	X					
MaxHeatFlowSp	X					
MinFlowSp	X					
BalancersCommand	X					
DmprRevRot	X					

EXHIBIT Q

Drawing

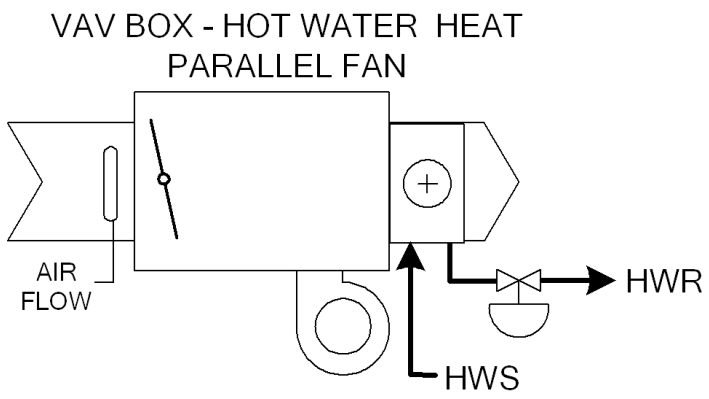

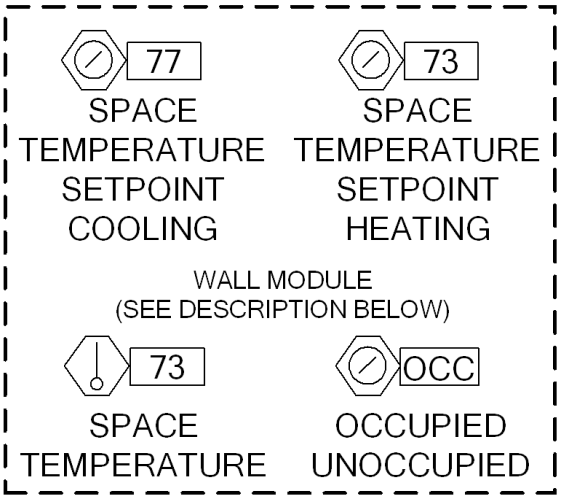

Mode Control.
System heating/cooling temperature set points shall be placed in the occupied, standby, or unoccupied mode of operation and controlled via an optimal start/stop system scheduler resident in the JACE controller. Prior to scheduled occupied periods, the equipment shall precondition the space to ensure occupied set point is achieved at the scheduled occupied time. The optimal start / stop schedule shall auto compensate for outdoor and indoor space temperature variations. During unoccupied and standby periods, the fan shall cycle on with heating or cooling demands accordingly to satisfy the unoccupied and standby temperature set points. The standby mode of operation is for periods of temporary vacancy and shall use owner determined standby temperature set points and can be triggered by local hardwired occupancy motion sensor or via network motion detection command from smart lighting control systems, communicating motion sensors, card access systems global load shed command or other EMS command.

System shall automatically revert to the proper mode of operation after restoration of power after a power failure.

Occupant Schedule Override Control.
During the unoccupied mode, each room temperature sensor wall module override button shall provide the room occupant with ability to place the system in the occupied mode of operation for 60 (adjustable) minutes. The occupant shall also have the ability to cancel the override command. The occupancy status shall be indicated on the wall module. The central VAV AHU shall monitor the VAVs and shall return to the occupied mode of operation anytime a VAV is placed in the override mode.

Temperature Control, Occupied Periods.
A PID algorithm shall be employed for all modulating control. The VAV primary air flow CFM set point shall be at the minimum air flow set point when occupied and there is no cooling or C02 ventilation demand. Upon a drop in space temperature below the heating set point and when central plant hot water is available, the VAV parallel fan shall start and the hot water reheat valve shall be modulated in response to the increasing heating demand. The inverse shall occur on a decrease in heating demand. Upon a rise in space temperature above the cooling set point, the primary air flow set point shall

be reset from minimum air flow set point to maximum air flow set point in response to the increasing cooling demand. The inverse shall occur on a decrease in cooling demand.

Heating mode is subject to the central plant outdoor air heating lockout.

If the space temperature drops or rises to either the heating or cooling unoccupied or standby temperature set points, the system shall operate in the heating or cooling mode accordingly until the heating or cooling demand has been satisfied. Cooling mode is subject to conditioned primary air availability from the central VAV AHU and heating mode is subject to central plant hot water availability.

Demand Controlled Ventilation.
When occupied, a local wall mounted C02 sensor shall reset the primary air flow set point from the minimum air flow set point toward the maximum air flow set point on a rise of measured C02 concentration above the adjustable C02 set point. The central VAV AHU shall monitor the associated VAVs and shall increase the percentage of AHU supplied outdoor air in response to VAV Co2 concentrations. The inverse shall occur on a drop of measured Co2 concentration.

Wall Sensor Module.
Wall temperature sensor module shall be located where shown on the plans, and shall include the temperature sensor, the occupied/unoccupied override selection push button with override status (where specified). The system owner determines the normal heating and cooling room temperature set point adjustment limits for all wall module sensors (such as 68F & 76F) as well as the maximum heating set point and minimum cooling set point (such as 70F & 72F). The local wall module set point adjustment shall give room occupants the ability to vary the local heating and cooling set points within these owner determined limits. Set points in use when the room is unoccupied or in standby modes shall not be affected the local user’s adjustments.

EXHIBIT R

System: VAV Parallel Fan HW-Reheat

EMS Point Name	Writable	Read Only	Alarm	Trend	Schedule	Global Control
User Defined Label	X					
SpaceTemp		X	X	X		
SupplyTemp		X	X	X		
C02_Sensor		X	X	X		
EffSetpoint		X				
EffOcc		X				
Status_mode		X				
Bypass	X					
FanCommand	X					
InManualState		X	X			
HotWaterValve	X			X		
BoxFlow		X		X		
EffBoxFlowSp		X				
DamperPosition		X		X		
OccCommand	X				X	
TerminalLoad		X				
OccupiedCool	X					
StandbyCool	X					
UnoccupiedCool	X					
OccupiedHeat	X					
StandbyHeat	X					
UnoccupiedHeat	X					
MinimumCoolSp	X					
MaximumHeatSp	X					
MaxWallModSp	X					
MinWallModSp	X					
C02_Sp	X					
BoxSizeSqFt	X					
Box_Kfactor	X					
MaxFlowSp	X					
MaxHeatFlowSp	X					
MinFlowSp	X					
BalancersCommand	X					
DmprRevRot	X					

EXHIBIT S

Drawing

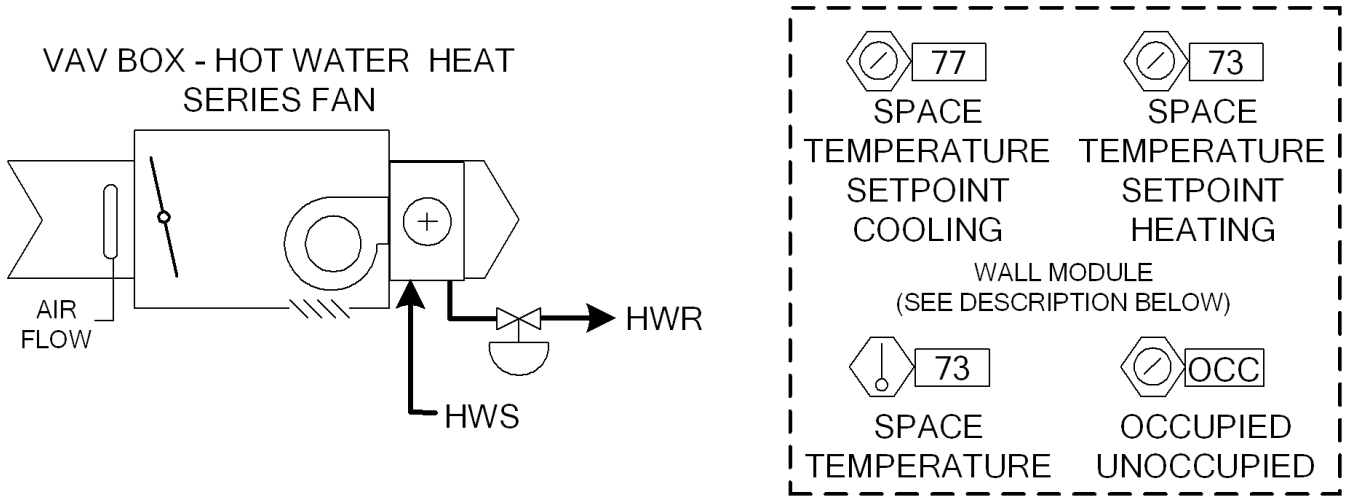

Mode Control.
System heating/cooling temperature set points shall be placed in the occupied, standby, or unoccupied mode of operation and controlled via an optimal start/stop system scheduler resident in the JACE controller. Prior to scheduled occupied periods, the equipment shall precondition the space to ensure occupied set point is achieved at the scheduled occupied time. The optimal start / stop schedule shall auto compensate for outdoor and indoor space temperature variations. During unoccupied and standby periods, the fan shall cycle on with heating or cooling demands accordingly to satisfy the unoccupied and standby temperature set points. The standby mode of operation is for periods of temporary vacancy and shall use owner determined standby temperature set points and can be triggered by local hardwired occupancy motion sensor or via network motion detection command from smart lighting control systems, communicating motion sensors, card access systems global load shed command or other EMS command.

System shall automatically revert to the proper mode of operation after restoration of power after a power failure.

Occupant Schedule Override Control.
During the unoccupied mode, each room temperature sensor wall module override button shall provide the room occupant with ability to place the system in the occupied mode of operation for 60 (adjustable) minutes. The occupant shall also have the ability to cancel the override command. The occupancy status shall be indicated on the wall module. The central VAV AHU shall monitor the VAVs and shall return to the occupied mode of operation anytime a VAV is placed in the override mode.

Temperature Control, Occupied Periods.
A PID algorithm shall be employed for all modulating control. During the occupied mode the VAV series fan shall start and run continuously and shall be cycled with unoccupied or standby heating and cooling demands. The VAV primary air flow CFM set point shall be at the minimum air flow set point when occupied and there is no cooling, heating or C02 ventilation demand. Upon a drop in space temperature below the heating set point and when central plant hot water is available, the primary air flow set point shall be reset toward the reheat air flow set point and the hot water reheat valve shall be modulated in response to the increasing heating demand. The inverse shall occur on a decrease in heating demand.

Upon a rise in space temperature above the cooling set point, the primary air flow set point shall be reset from minimum air flow set point to maximum air flow set point in response to the increasing cooling demand. The inverse shall occur on a decrease in cooling demand.

Heating mode is subject to the central plant outdoor air heating lockout.

If the space temperature drops or rises to either the heating or cooling unoccupied or standby temperature set points, the system shall operate in the heating or cooling mode accordingly until the heating or cooling demand has been satisfied. Cooling mode is subject to conditioned primary air availability from the central VAV AHU and heating mode is subject to central plant hot water availability.

Demand Controlled Ventilation.
When occupied, a local wall mounted C02 sensor shall reset the primary air flow set point from the minimum air flow set point toward the maximum air flow set point on a rise of measured C02 concentration above the adjustable C02 set point. The central VAV AHU shall monitor the associated VAVs and shall increase the percentage of AHU supplied outdoor air in response to VAV Co2 concentrations. The inverse shall occur on a drop of measured Co2 concentration.

Wall Sensor Module.
Wall temperature sensor module shall be located where shown on the plans, and shall include the temperature sensor, the occupied/unoccupied override selection push button with override status (where specified). The system owner determines the normal heating and cooling room temperature set point adjustment limits for all wall module sensors (such as 68F & 76F) as well as the maximum heating set point and minimum cooling set point (such as 70F & 72F). The local wall module set point adjustment shall give room occupants the ability to vary the local heating and cooling set points within these owner determined limits. Set points in use when the room is unoccupied or in standby modes shall not be affected the local user’s adjustments.

EXHIBIT T

System: VAV Series Fan HW-Reheat

EMS Point Name	Writable	Read Only	Alarm	Trend	Schedule	Global Control
User Defined Label	X					
SpaceTemp		X	X	X		
SupplyTemp		X	X	X		
C02_Sensor		X	X	X		
EffSetpoint		X				
EffOcc		X				
Status_mode		X				
Bypass	X					
FanCommand	X					
InManualState		X	X			
HotWaterValve	X			X		
BoxFlow		X		X		
EffBoxFlowSp		X				
DamperPosition		X		X		
OccCommand	X				X	
TerminalLoad		X				
OccupiedCool	X					
StandbyCool	X					
UnoccupiedCool	X					
OccupiedHeat	X					
StandbyHeat	X					
UnoccupiedHeat	X					
MinimumCoolSp	X					
MaximumHeatSp	X					
MaxWallModSp	X					
MinWallModSp	X					
C02_Sp	X					
BoxSizeSqFt	X					
Box_Kfactor	X					
MaxFlowSp	X					
MaxHeatFlowSp	X					
MinFlowSp	X					
BalancersCommand	X					
DmprRevRot	X					

EXHIBIT U

Drawing

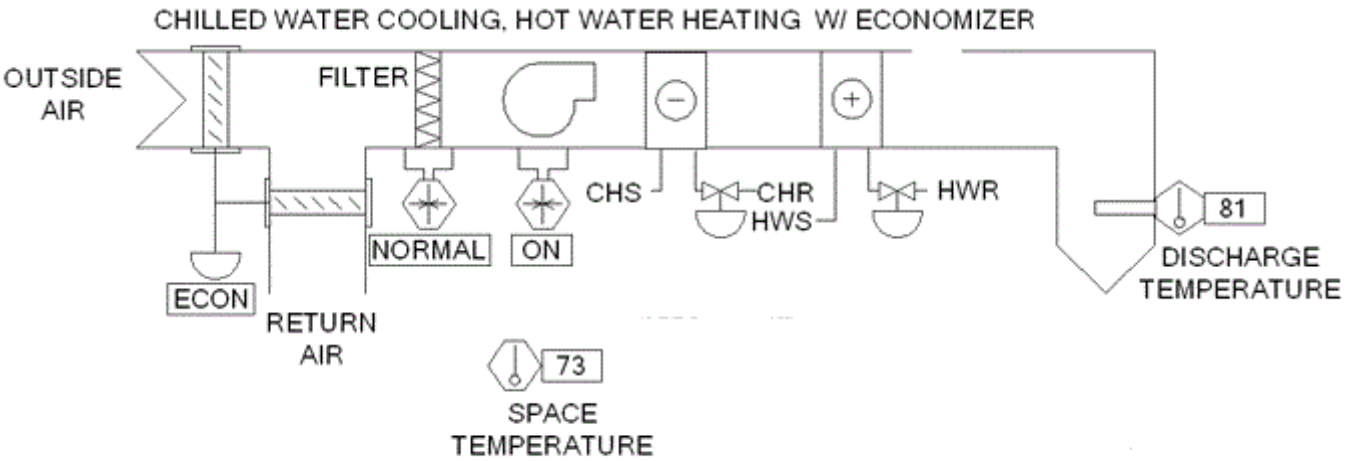

Fan Off.
Anytime the fan is off, all system heating and cooling shall be off, and the mixing dampers shall be positioned closed to the outside air. Mixing dampers shall spring-return closed to the outside air on power failure. The hot water valve shall maintain an adjustable off cycle minimum position (8%) when the outdoor temperature drops below 40F.
A manual reset serpentine freeze stat located on the hot water coil shall upon activating shall stop the fan, close the outdoor dampers and override the heating and cooling valves to full open position and an alarm shall be generated and sent to the operator station.

Fan and Mode Control.
Occupied mode of operation shall be controlled via an optimal start/stop system scheduler resident in the JACE controller. Prior to scheduled occupied periods, the equipment shall precondition the space to ensure occupied set point is achieved at the scheduled occupied time. The optimal start / stop schedule shall auto compensate for outdoor and indoor space temperature variations. When occupied the supply fan shall start and run continuously. During unoccupied the VAV AHU shall monitor the associated VAV average space temperature and the fan shall cycle on with heating or cooling demands accordingly to satisfy the unoccupied heating and cooling temperature set points. During the optimal start/stop recovery period the outdoor fresh air minimum position shall be held to zero.
When the supply fan is operational, the duct static pressure control PID algorithm shall modulate the supply fan VFD to maintain the adjustable duct static pressure set point as determined by the balancing contractor minus (20%).

System shall automatically revert to the proper mode of operation after restoration of power after a power failure.

Occupant Schedule Override Control.
During the unoccupied mode, the VAV AHU shall monitor the associated VAVs for occupancy bypass and shall return the VAV AHU to the occupancy mode during a VAV bypass condition.

The fan shall be shut down anytime an unsafe condition exists at a manual reset hard-wired smoke detector located as required by codes.

Fan Fail Alarm.
Any time the fan is commanded on and the fan status current transducer does not detect fan operation during a 60 seconds alarm delay period, a fan failure alarm shall be generated and sent to the operator station. All heating and cooling shall be locked out until fan operation status is proved.

Minimum Ventilation Control.
Anytime the fan runs in the occupied mode, the outside & return air mixing dampers shall modulate to outside air minimum position set point (3%) to introduce the minimum outside air required for building pressurization and minimum air changes.

Demand Controlled Ventilation.
When occupied, the VAV AHU shall monitor the associated VAV average C02 concentration and shall reset the outdoor air minimum position from the minimum position toward the maximum C02 ventilation position upon a rise of measured C02 concentration above the adjustable C02 set point. The inverse shall occur on a drop of measured Co2 concentration.

Temperature Control, Occupied Periods.
Subject to the fan status proof, heating, economizer and cooling valves shall be modulated to satisfy the VAV AHU supply air temperature set point. The VAV AHU supply air temperature set point shall be reset between the minimum and maximum supply air reset set points based on the associated VAV average terminal loads. (Ex. 55F deg / 68F deg) A PID algorithm shall be employed for all modulating control.

Cooling and heating are subject to the central plant outdoor air heating and cooling lockout set points.

Anytime there is a cooling demand and the outside air temperature is suitable for economizing, the mixing dampers shall be modulated as the first cooling stage and shall maintain the calculated target discharge air set point. Chilled water and simultaneous economizer operation can occur to satisfy the cooling load.

During unoccupied, If the associated VAV box average space temperature drops or rises to either the heating or cooling unoccupied temperature set points, the system shall start and operate in the heating or cooling mode accordingly until the heating or cooling demand has been satisfied. Outdoor fresh air minimum position shall be held to zero during these periods.

Discharge Low Limit.
If at any time during the ventilation/circulation operations the discharge air drops below the user defined discharge air temperature low limit set point, the heating valve shall be modulated to maintain safe operating parameters of the equipment.

Miscellaneous.
Anytime the pressure drop exceeds the clean setting as measured by a differential pressure switch piped across each unit’s filter, an alarm shall be generated and sent to the operator station.

EXHIBIT V

System: VAV AHU-HW/CW

EMS Point Name	Writable	Read Only	Alarm	Trend	Schedule	Global Control
User Defined Label	X					
SpaceTempAverage		X	X	X		
SupplyTemp		X	X	X		
C02_SensorAverage		X	X	X		
CalcSupplyAirSetpoint		X				
EffOcc		X				
FanCommand	X					
FanStatus		X		X		
DuctStatic		X	X	X		
SupplyFanVFD	X			X		
FanFailureAlarm		X	X			
FrzStatAlarm		X	X			
SmokeDetAlarm		X	X			
Economizer	X			X		
HotWaterValve	X			X		
ChilledWaterValve	X			X		
OccCommand	X				X	
RecoveryActive	X				X	
TerminalLoadAverage		X				
UnoccupiedCool	X					
UnoccupiedHeat	X					
MaxResetSupplyAirSp	X					
MinResetSupplyAirSp	X					
HeatLckOutSp	X					
CoolLckOutSp	X					
EconMinPosSp	X					
C02_Sp	X					
SupplyAirTemperingSp	X					
OaTempIn	X					X
EconEnableIn	X					X

SECTION 25 13 00

UTILITY MONITORING AND CONTROL SYSTEM (UMCS) HARDWARE AND SOFTWARE
11/12

PART 1 GENERAL

1.1 SUMMARY

The Utility Monitoring and Control System (UMCS) shall perform supervisory monitoring and supervisory control of base-wide building control systems and utility control systems using one or more of: CEA-709.1-D (LonWorks) with LonWorks Network Services (LNS), ASHRAE 135 (BACnet), Modbus, OPC DA, or the Niagara Framework with Fox protocol as specified and shown.

1.1.1 System Requirements

Provide a UMCS as specified and shown, and in accordance with the following characteristics:

1.1.1.1 General System Requirements

a. The system shall perform supervisory monitoring and control functions including but not limited to Scheduling, Alarm Handling, Trending, Overrides, Report Generation, and Electrical Demand Limiting as specified.

b. The system shall include a Graphical User Interface which shall allow for graphical navigation between systems, graphical representations of systems, access to real-time data for systems, ability to override points in a system, and access to all supervisory monitoring and control functions.

c. All software used by the UMCS and all software used to install and configure the UMCS shall be licensed to and delivered to the installation.

d. All necessary documentation, configuration information, configuration tools, programs, drivers, and other software shall be licensed to and otherwise remain with the Government such that the Government or their agents are able to repair, replace, upgrade, and expand the system without subsequent or future dependence on the Contractor. Software licenses shall not require periodic fees and shall be valid in perpetuity.

e. Provide sufficient documentation and data, including rights to documentation and data, such that the Government or their agents can execute work to repair, replace, upgrade, and expand the system without subsequent or future dependence on the Contractor or Software Provider.

f. For UMCS systems with Monitoring and Control Software functionality implemented in Monitoring and Control (M&C) Controller Hardware, provide sufficient additional controller hardware to support the full

capacity requirements as specified.

1.1.1.2 Installed Equipment in NAVFAC Operations Center

The Niagara AX (Niagara 4, upon availability) front-end system is composed of virtualized Windows, operating on a dedicated ICS server running the latest version of Windows Server software and the Microsoft Hypervisor.

Niagara Servers:
One serves the operator stations.
One SQL Server: Stores all trending data in the ICS System

The operations center will consist of four workstations:
Two workstations operating the Niagara based DDC system.
One workstation operating as an access point to the PNSY AMI system.
One workstation operating as an access point to available SCADA networks.
Large-screen wall-mounted situation displays controlled from the ICS workstations.

1.1.1.3 Niagara Framework Requirements

The UMCS shall use the Niagara Framework and shall communicate with Niagara Framework field control systems using the Fox protocol as indicated and specified.

1.1.2 General Information Assurance Requirements

Information Assurance for the system shall be addressed in accordance with the following requirements.

1.1.2.1 Cyber Security

Prior to initiating any work on site pertaining to the ICS each contractor employee who will work on programming or existing ICS infrastructure shall:

a. Complete the SAAR-N form (provided by NAVFAC) and provide to Contracting Officer, or their representative;

b. Complete the annual Department of Defense Information Assurance Awareness training at http://iase.disa.mil/eta/iaav9/iaa_v9/index.htm;

c. Have proof of a clean background investigation with a least a Facility Access Determination (FAD)

Contractor should plan substantial time to complete the clearance activities listed above.

Admin Rights: Contractors will not be granted full admin rights to any government-owned computer. Local accounts on government computers are not allowed; contractors whose personnel who have submitted their forms and have a proper background check or clearance will be granted NAVFAC Domain accounts for their access needs for the duration of the project. In order to receive the domain accounts for the Contractor's employees, the Contractor shall complete one copy of the Contractor Domain Account Request form (provided by NAVFAC).

USB 'thumb' drives are prohibited on Government equipment. Government-supplied USB hard drives are acceptable and can be checked out from CIO.

The Contractor shall not leave behind any telecommunication infrastructure (i.e., cellular modems) that allows remote access into installed equipment.

Provide secure password protection for each device/system; provide all integration necessary to incorporate centralized authentication with the NAVFAC Windows Domain Controllers. Password information shall be need-to-know, and the Contractor shall not disclose it to others. Password information shall be submitted via hard copy correspondence or CD to the Contracting Officer. Passwords shall not be conveyed by e-mail or 3rd party means.

If any of the above security requirements are violated, the individual(s) will have (at a minimum) their Government computer access privileges revoked. All IT related possessions may be confiscated pending an investigation.

1.1.2.2 ICS Network

Upon request by the Contractor, the Government will provide IP addresses for each Ethernet-addressable device. The Contractor shall first provide a spreadsheet with the MAC address, serial number, device nomenclature, firmware revision, planned port on switch to which it is connected, system function being served by each device installed, and a blank field for the IP address. The government will return the spreadsheet to the Contractor with IP addresses filled in. IP addresses will not be provided electronically.

All devices installed by this project shall have Ethernet interfaces capable of functioning normally during heavy network traffic situations without failing or requiring manual reset.

The Contractor shall provide and program initial usernames and passwords for Ethernet switches, and submit this information to the Contracting Officer as part of the request to have the device(s) connected to the network.

1.1.3 ICS Programming Software

For software used to program and create graphical content on the supervisory controller and is not already existing on site, the Contractor shall provide 3 copies of the software.

The installed version of the programming software for each device shall be licensed to NAVFAC CIO. Software shall be submitted on CD-ROM, and one hard copy and one electronic copy of the software user manual shall be submitted for each piece of software provided.

1.1.4 Symbols, Definition and Abbreviations

Symbols, definitions, and engineering unit abbreviations used in displays, submittals and reports shall be as shown in the contract drawings. Symbols, definitions and abbreviations not in the contract drawings shall conform at a minimum to IEEE Stds Dictionary and the ASHRAE FUN IP, as

applicable.

1.1.5 System Units and Accuracy

Displays, print-outs and calculations shall be performed in English (inch-pound) units. Calculations shall have accuracy equal to or exceeding sensor accuracy. Displays and printouts shall present values to at least three significant figures.

1.1.6 Data Packages/Submitals Requirements

Technical data packages consisting of computer software and technical data (meaning technical data which relates to computer software) which are specifically identified in this project and which may be defined/required in other specifications shall be delivered strictly in accordance with the CONTRACT CLAUSES and in accordance with the Contract Data Requirements List, DD Form 1423. Data delivered shall be identified by reference to the particular specification paragraph against which it is furnished. All submittals not specified as technical data packages are considered shop drawings under the Federal Acquisition Regulation Supplement (FARS) and shall contain no proprietary information and shall be delivered with unrestricted rights.

1.2 REFERENCES

The publications listed below form a part of this specification to the extent referenced. The publications are referred to within the text by the basic designation only.

AMERICAN NATIONAL STANDARDS INSTITUTE (ANSI)

ANSI INCITS 154	(1988; R 2004) Office Machines and Supplies - Alphanumeric Machines - Keyboard Arrangement

AMERICAN SOCIETY OF HEATING, REFRIGERATING AND AIR-CONDITIONING ENGINEERS (ASHRAE)

ASHRAE 135	(Errata 1 2013; INT 1-9 2013; Errata 2 2013; INT 10-12 2014; Errata 3-4 2014; Addenda AI-AY 2014; Addenda O 2014) BACnet—A Data Communication Protocol for Building Automation and Control Networks
ASHRAE FUN IP	(2013; Addenda and Corrigendum 2013) Fundamentals Handbook, I-P Edition

CONSUMER ELECTRONICS ASSOCIATION (CEA)

CEA-709.1-D	(2014) Control Network Protocol Specification
CEA-852-C	(2014) Tunneling Component Network Protocols Over Internet Protocol Channels

INSTITUTE OF ELECTRICAL AND ELECTRONICS ENGINEERS (IEEE)

IEEE C62.41	(1991; R 1995) Recommended Practice on Surge Voltages in Low-Voltage AC Power

Circuits

IEEE Stds Dictionary (2009) IEEE Standards Dictionary: Glossary of Terms & Definitions

INTERNET ENGINEERING TASK FORCE (IETF)

IETF RFC 5246 (2008) The Transport Layer Security (TLS) Protocol Version 1.2

MODBUS ORGANIZATION, INC (MODBUS)

Modbus (2006) Modbus Application Protocol Specification; Version 1.1b and Modbus Messaging on TCP/IP Implementation Guide; Version V1.0b

NATIONAL ELECTRICAL MANUFACTURERS ASSOCIATION (NEMA)

NEMA 250 (2014) Enclosures for Electrical Equipment (1000 Volts Maximum)

NATIONAL FIRE PROTECTION ASSOCIATION (NFPA)

NFPA 262 (2015) Standard method of Test for Flame Travel and Smoke of Wires and Cables for Use in Air-Handling Spaces

NFPA 70 (2014; AMD 1 2013; Errata 1 2013; AMD 2 2013; Errata 2 2013; AMD 3 2014; Errata 3-4 2014; AMD 4-6 2014) National Electrical Code

OPC FOUNDATION (OPC)

OPC DA (2002) OPC Data Access (DA) Specification; Version 2.05a

TELECOMMUNICATIONS INDUSTRY ASSOCIATION (TIA)

TIA-568-C.1 (2009; Add 2 2011; Add 1 2012) Commercial Building Telecommunications Cabling Standard

TIA-606 (2012b) Administration Standard for the Telecommunications Infrastructure

TIA-607 (2011b) Generic Telecommunications Bonding and Grounding (Earthing) for Customer Premises

TRIDIUM, INC (TRIDIUM)

Niagara Framework (2012) NiagaraAX User's Guide

Tridium Open NiCS (2005) Understanding the NiagaraAX Compatibility Statement (NiCS)

U.S. FEDERAL COMMUNICATIONS COMMISSION (FCC)

FCC EMC	(2002) FCC Electromagnetic Compliance Requirements
FCC Part 15	Radio Frequency Devices (47 CFR 15)

UNDERWRITERS LABORATORIES (UL)

UL 60950	(2000; Reprint Oct 2007) Safety of Information Technology Equipment

1.3 DEFINITIONS

The following list of definitions may contain terms not found elsewhere in this Section but are included here for completeness. Some terms are followed with a protocol reference in parenthesis (for example: (BACnet)) indicating to which protocol the term and definition applies.

1.3.1 Alarm Generation

The process of comparing a point value (the point being alarmed) with a pre-defined alarm condition (e.g. a High Limit) and performing some action based on the result of the comparison.

1.3.2 Alarm Handling

see Alarm Routing

1.3.3 Alarm Routing

Alarm routing is M&C software functionality that starts with a notification that an alarm exists (typically as the output of an Alarm Generation process) and sends a specific message to a specific alarm recipient or device.

1.3.4 BACnet (BACnet)

The term BACnet is used in two ways. First meaning the BACnet Protocol Standard - the communication requirements as defined by ASHRAE 135 including all annexes and addenda. The second to refer to the overall technology related to the ASHRAE 135 protocol.

1.3.5 Binary

A two-state system or signal; for example one where an "ON" condition is represented by a high signal level and an "OFF" condition is represented by a low signal level. 'Digital' is sometimes used interchangeably with 'binary'.

1.3.6 Broadcast

Unlike most messages, which are intended for a specific recipient device, a broadcast message is intended for all devices on the network.

1.3.7 Building Control Network (BCN)

The network used by the Building Control System. Typically the BCN is a

BACnet ASHRAE 135 or LonWorks CEA-709.1-D network installed by the building control system contractor.

1.3.8 Building Control System (BCS)

One type of Field Control System. A control system for building electrical and mechanical systems, typically HVAC (including central plants) and lighting. A BCS generally uses Direct Digital Control (DDC) Hardware and generally does NOT include its own local front end.

1.3.9 Building Point of Connection (BPOC)

A FPOC for a Building Control System. (This term is being phased out of use in preference for FPOC but is still used in some specifications and criteria.)

1.3.10 Control Logic Diagram

A graphical representation of control logic for multiple processes that make up a system.

1.3.11 Facility Point Of Connection (FPOC)

The FPOC is the point of connection between the UMCS IP Network and the field control network (either an IP network, a non-IP network, or both). The hardware at this location which provides the connection is generally one of a control protocol router, a control protocol gateway, or an IT device such as a switch, IP router, or firewall.

In general, the term "FPOC Location" means the place where this connection occurs, and "FPOC Hardware" means the device that provides the connection. Sometimes the term "FPOC" is used to mean either and its actual meaning (i.e. location or hardware) is determined by the context in which it is used.

1.3.12 Field Control Network

The network used by a field control system.

1.3.13 Field Control System (FCS)

A building control system or utility control system.

1.3.14 Fox Protocol (Niagara Framework)

The protocol used for communication between components in the Niagara Framework. By default, Fox uses TCP port 1911

1.3.15 Gateway

A device that translates from one protocol to another. Devices that change only the transport mechanism of the protocol - "translating" from LonWorks over TP/FT-10 to LonWorks over IP for example - are not gateways as the underlying protocol (data format) does not change. Gateways are also called Communications Bridges or Protocol Translators.

1.3.16 JACE (Niagara Framework)

Java Application Control Engine. See Niagara Framework Supervisory Gateway

1.3.17 LonWorks (LonWorks)

The term used to refer to the overall technology related to the CEA-709.1-D protocol (sometimes called "LonTalk"), including the protocol itself, network management, interoperability guidelines and products.

1.3.18 Modbus

A basic protocol for control network communications generally used in utility control systems. The Modbus protocol standard is maintained by The Modbus Organization.

1.3.19 Monitoring and Control (M&C) Software

The UMCS 'front end' software which performs supervisory functions such as alarm handling, scheduling and data logging and provides a user interface for monitoring the system and configuring these functions.

1.3.20 Niagara AX (Niagara Framework)

The current version (release) of the Niagara Framework. While it is often used to refer to just the front end, it includes all components of the Niagara Framework. (Note: The previous version of the Niagara Framework is "R2".)

1.3.21 Niagara Framework (Niagara Framework)

A set of hardware and software specifications for building and utility control owned by Tridium Inc. and licensed to multiple vendors. The Framework consists of front end (M&C) software, web based clients, field level control hardware, and engineering tools. While the Niagara Framework is not adopted by a recognized standards body and does not use an open licensing model, it is sufficiently well-supported by multiple HVAC vendors to be considered a de-facto Open Standard.

1.3.22 Niagara Framework Supervisory Gateway (Niagara Framework)

DDC Hardware component of the Niagara Framework. A typical Niagara architecture has Niagara specific supervisory gateways at the IP level and other (non-Niagara specific) controllers on field networks (TP/FT-10, MS/TP, etc.) beneath the Niagara supervisory gateways. The Niagara specific controllers function as a gateway between the Niagara framework protocol (Fox) and the field network beneath. These supervisory gateways may also be used as general purpose controllers and also have the capability to provide a web-based user interface.

Note that different vendors refer to this component by different names. The most common name is "JACE"; other names include "EC-BOS", "FX-40", and "UNC".

1.3.23 Override

To change the value of a point outside of the normal sequence of operation where this change has priority over the sequence. An override can be accomplished in one of two ways: the point itself may be Commandable and written to with a priority or there may be a separate point on the controller for the express purpose of implementing the override.

Typically this override is from the Utility Monitoring and Control System (UMCS) Monitoring and Control (M&C) Software. Note that this definition is not standard throughout industry.

1.3.24 Point, Calculated

A value within the M&C Software that is not a network point but has been calculated by logic within the software based on the value of network points or other calculated points. Calculated points are sometimes called virtual points or internal points.

1.3.25 Point, Network

A value that the M&C Software reads from or writes to a field control network.

1.3.26 Polling

A requested transmission of data between devices, rather than an unrequested transmission such as Change-Of-Value (COV) or Binding where data is automatically transmitted under certain conditions.

1.3.27 Property (BACnet)

A BACnet Property - a data element associated with an Object. Different Objects have different Properties, for example an Analog Input Object has a Present_Value Property (which provides the value of the underlying hardware analog input), a High_Limit Property (which contains a high limit for alarming), as well as other properties.

1.3.28 Protocol Implementation Conformance Statement (PICS)(BACnet)

A document, created by the manufacturer of a device, which describes which potions of the BACnet standard are implemented by a given device.

1.3.29 Repeater

A device that connects two control network segments and retransmits all information received on one side onto the other.

1.3.30 Segment

A 'single' section of a control network that contains no repeaters or routers. There is generally a limit on the number of devices on a segment, and this limit is dependent on the topology/media and device type. For example, a TP/FT-10 segment with locally powered devices is limited to 64 devices, and a BACnet MS/TP segment is limited to 32 devices.

1.3.31 Supervisory Controller

A controller implementing a combination of supervisory logic (global control strategies or optimization strategies), scheduling, alarming, event management, trending, web services or network management. Note this is defined by use; many supervisory controllers have the capability to also directly control equipment.

1.3.32 Supervisory Gateway

A device that is both a supervisory controller and a gateway, such as a

Niagara Framework Supervisory Gateway.

1.3.33 UMCS Network

An IP network connecting multiple field control systems to the Monitoring and Control Software using one or more of: LonWorks (CEA-709.1-D and CEA-852-C), BACnet (ASHRAE 135 Annex J), Modbus or OPC DA.

1.3.34 Utility Control System (UCS)

One type of field control system. Used for control of utility systems such as an electrical substation, sanitary sewer lift station, water pump station, etc. Building controls are excluded from a UCS, however it is possible to have a Utility Control System and a Building Control System in the same facility, and for those systems to share components such as the FPOC. A UCS may include its own local front-end.

1.4 SUBMITTALS

Government approval is required for submittals with a "G" designation; submittals not having a "G" designation are for information only. Submit the following in accordance with Section 01 33 00 SUBMITTAL PROCEDURES and TABLE 1: PROJECT SEQUENCING

SD-02 Shop Drawings

UMCS Contractor Design Drawings; G

Draft As-Built Drawings; G

Final As-Built Drawings; G

Final As-Built Drawings in hard copy and on optical disk in PDF and AutoCAD 2010 format.

Navigational Outline; G

Provide the complete graphic Navigational Outline for the project, including all pages created by the project, and all existing pages that will be modified or deleted.

Graphics; G

Provide graphics pages for the project at actual graphics resolution and format, including all common pieces of equipment, page backgrounds, and menu structures. Additionally, provide the entire station copy (including images, px pages, and the *.bog file) of the graphical user interface along with the administrative credentials.

Component Wiring Diagram; G

Provide wiring diagrams and layouts for each control panel. Show termination numbers
Provide riser diagrams showing control network layout, communication protocol, and wire types.

Provide network diagrams of wiring between an existing ICS network drop and the one proposed for this project. Edit an existing riser diagram to show overall network connectivity and routing. Network diagram edit can be done manually, but shall be done clearly enough to be used for record drawing(s) by the BOSC or shop.
Riser diagrams showing control network layout, communication protocol, and wire types.

SD-03 Product Data

Product Data Sheets; G

Copies of all manufacturer catalog cuts and specification sheets for all products (equipment) specified in PART 2 and supplied under this contract.

Computer Software; G

The most recent versions of all computer software provided under this specification delivered as a Technical Data Package. The user manuals for all software delivered for this project shall be submitted with the software.

SD-05 Design Data

UMCS IP Network Bandwidth Usage Estimate; G

Two copies of the UMCS IP Network Bandwidth Usage Estimate.

SD-06 Test Reports

Existing Conditions Report; G

Two copies of the Existing Conditions Report.

Factory Test Procedures; G

Two copies of the Factory Test Procedures. The Factory Test Procedures may be submitted as a Technical Data Package.

Factory Test Report; G

Two copies of the Factory Test Report. The Factory Test Report may be submitted as a Technical Data Package.

Start-Up and Start-Up Testing Report; G

The Start-Up and Testing report may be submitted as a Technical Data Package.

PVT Procedures; G

PVT Phase I Report; G

Pre-Construction QC Checklist; G

Post-Construction QC Checklist; G

SD-10 Operation and Maintenance Data

Preventive Maintenance Work Plan; G

Two copies of the Preventive Maintenance Work Plan. The Preventive Maintenance Work Plan may be submitted as a Technical Data Package.

Basic Training Documentation; G

Training manuals for Basic Training delivered for each trainee on the Course Attendance List with two additional copies delivered for archival at the project site. Two copies of the Course Attendance List shall be delivered with the archival copies. The Basic Training Documentation may be submitted as a Technical Data Package.

Advanced Training Documentation; G

One set of training manuals delivered for each trainee on the Course Attendance List with two additional copies delivered for archival at the project site. Two copies of the Course Attendance List shall be delivered with the archival copies. The Advanced Training Documentation may be submitted as a Technical Data Package.

Refresher Training Documentation; G

One set of training manuals delivered for each trainee on the Course Attendance List with two additional copies delivered for archival at the project site. Two copies of the Course Attendance List shall be delivered with the archival copies. The Refresher Training Documentation may be submitted as a Technical Data Package.

Operation and Maintenance (O&M) Instructions; G

Two bound O&M Instructions and two copies of the Instructions in PDF format on optical disk. Bound Instructions shall be indexed and tabbed. Instructions in PDF form shall be a single PDF file, or multiple PDF files with a PDF file table of contents containing links to the other files. O&M Instructions may be submitted as a Technical Data Package.

eOMSI requires, at minimum:

Start-up and Shutdown Procedures
Normal Operating Instructions
Operator Service Requirements
Cleaning Recommendations
Lubrication Recommendations
Troubleshooting guides and Diagnostic Techniques
Repair Procedures

Removal and Replacement Instructions
Warranty Information

SD-11 Closeout Submittals

Closeout QC Checklist; G

Two copies of the Closeout QC Checklist.

1.5 QUALITY CONTROL (QC) CHECKLISTS

The Contractor's Chief Quality Control (QC) Representative shall complete the QC Checklist in APPENDIX A, and shall submit the Pre-Construction QC Checklist, Post-Construction QC Checklist and Closeout QC Checklist as specified. The QC Representative shall verify each item in the Checklist and initial in the provided area to indicate that the requirement has been met. The QC Representative shall sign and date the Checklist prior to submission to the Government.

1.5.1 Standard Products

Provide material and equipment that are standard products of manufacturers regularly engaged in the manufacturing of such product, using similar materials, design and workmanship. The standard products (excluding software) shall have been in commercial or industrial use for 1 year prior to bid opening, unless otherwise approved by the Government. The 1-year use shall include applications of similarly sized equipment and materials used under similar circumstances. The 2-year experience must be satisfactorily completed by a product that has been sold on the commercial market through advertisements, manufacturers' catalogs, or brochures.
Provide materials and equipment that are manufacturer's products currently in production, and supported by a local service organization. Contractor supplied units of the same type of equipment shall be products of a single manufacturer. Each major component of equipment shall have the manufacturer's name and the model and serial number in a conspicuous place. Materials and equipment shall be new standard unmodified products of a manufacturer regularly engaged in the manufacturing of such products.

1.5.2 Contractor's Qualifications

The Contractor or subcontractor that will perform the work shall have completed at least three systems installations of the same type and design specified, that have successfully operated the required sequence of operation for at least one year. The installer shall be a Honeywell Niagara AX Contractor-Partner.
The programmer responsible for programming the SC's shall have a minimum of 2 years experience in programming SC's for similar systems of the same manufacturer. Programmer shall have successfully completed the Niagara AX Certification Training Course and be certified.

1.5.3 Commissioning

The Contractor shall provide commissioning of the Industrial Control System (ICS) installed by this project and the Commissioning Agent shall create testing requirements as necessary to verify the installed ICS system meets the contract requirements.

1.6 DELIVERY, STORAGE, AND HANDLING

Stored products shall be protected from the weather, humidity and temperature variations, dirt and dust, and other contaminants, within the storage condition limits published by the equipment manufacturer.

1.7 OPERATION AND MAINTENANCE (O&M) INSTRUCTIONS

The UMCS Operation and Maintenance Instructions shall include:

a. Procedures for the UMCS system start-up, operation and shut-down.

b. Final As-Built drawings.

c. Routine maintenance checklist. The routine maintenance checklist shall be arranged in a columnar format. The first column shall list all installed devices, the second column shall state the maintenance activity or state no maintenance required, the third column shall state the frequency of the maintenance activity, and the fourth column for additional comments or reference.

d. Qualified service organization list including points of contact with phone numbers.

e. Start-Up and Start-Up Testing Report.

f. Performance Verification Test (PVT) Procedures and Reports.

g. eOMSI requirements as listed 01 78 24.00 20 Facility Electronic Operation and Maintenance Support Information

1.8 WARRANTY

The Warranty shall be for no less than a period of twelve months following the completion of the project.

PART 2 PRODUCTS

2.1 EQUIPMENT REQUIREMENTS

2.1.1 Product Certifications

Computing devices, as defined in FCC Part 15, supplied as part of the UMCS shall be certified to comply with the requirements of Class B computing devices.

2.1.2 Product Sourcing

Contractor supplied units of the same type of equipment shall be products of a single manufacturer. Each major component of equipment shall have the manufacturer's name and the model and serial number in a conspicuous place. Materials and equipment shall be new standard unmodified products of a manufacturer regularly engaged in the manufacturing of such products.

Use new products the manufacturer is currently manufacturing and selling for use in new installations. Do not use this installation as a product test site unless explicitly approved in writing by the Government.

The Contractor shall select software, materials and equipment that are

compatible with the existing ICS system. If the Contractor incorporates equipment or devices which require software and programming tools different than those currently in use, the Contractor shall provide compatible software for every server, laptop and desktop workstation in the existing ICS, any specialized training, and all ICS modifications or specialized programming needed to support the unique equipment.

Contractor shall use as practicable, the same manufacturer for each installed component of the same function.

2.1.3 General Requirements

Provide components that meet the following requirements:

a. Portions of the data communications equipment system installed in unconditioned spaces shall operate properly in an environment with ambient temperatures between +32 and 120 degrees F and ambient relative humidity between 10 percent and 90 percent noncondensing.

b. Components shall accept 100 to 125 volts AC (Vac), 60 Hz, single phase, three wire with a three-pronged, dedicated circuit outlet or be provided with a transformer to meet the component's power requirements.

c. The equipment shall meet the requirements of NFPA 70, UL 60950, NFPA 262, FCC EMC, and FCC Part 15.

2.1.4 Nameplates

Nameplates shall be laminated plastic and shall identify the function, network address, if applicable, and identifier of the device. Laminated plastic shall be at least 0.125 inch thick, white with black center core. Nameplates shall be a minimum of 1 by 3 inch with minimum 0.25 inch high engraved block lettering.

2.1.5 Product Data Sheets

For all products (equipment) specified in PART 2 and supplied under this contract, submit copies of all manufacturer catalog cuts and specification sheets to indicate conformance to product requirements.

2.2 COMPUTER HARDWARE

All computer hardware furnished under this specification shall be standard products of a single manufacturer which advertises service in all 48 contiguous states, and shall be a model currently in production. Except for PCI-E cards installed into expansion slots provided in a desktop or server computer in order to meet the requirements of this specification, computer hardware shall not be modified from the manufacturer configuration.

2.2.1 Server Hardware

Computer Server Hardware (server) shall be a server computer meeting the following minimum requirements:

2.2.1.1 Processor

Multi-core (with a core-count no less than 10) processor designed for server applications. Processor speed shall be at least 50 percent of the

speed of the fastest Intel server processor commercially available.

2.2.1.2 Random Access Memory (RAM)

300 percent of the recommended requirements of the software to be installed on the serverand no less than 64GB.

2.2.1.3 Communications Ports

Four USB ports.

2.2.1.4 Hard Drives

2.2.1.4.1 Internal Hard Drives

Hard drives with SATA-3 Controller providing at least 150 percent expected archival storage capacity through the supportable life of the server or at least five years, andat least 3TB usable disk space. Hard drives shall use RAID (Redundant Array of Inexpensive Disks) at levels 1 or 5 (RAID-1 or RAID-5).

2.2.1.4.2 External Hard Drive

An external hard drive shall be provided, and shall be sized appropriately to store weekly back-up disk images through the warranty of the server.

2.2.1.5 Optical Drive

One DVD-RW Drive.

2.2.1.6 Video Output

32-bit color at a minimum resolution of 1920 by 1080 at a minimum refresh rate of 70 Hz and a DVI output.

2.2.1.7 Network Interface

Two integrated 1000Base-T Ethernet with RJ45 connector.

2.2.1.8 Monitor

Widescreen flat panel monitor no less than 24 inches nominal, with a minimum resolution of 1920 by 1080 pixels, and a minimum refresh rate of 70Hz.

2.2.1.9 Keyboard

101 key wired USB keyboard having a minimum 64 character standard ASCII character set based on ANSI INCITS 154 and an integral smart card reader compatible with a Department of Defense Common Access Card (CAC).

2.2.1.10 Mouse

2-button wired USB optical scroll mouse with a minimum resolution of 400 dots per inch.

2.2.1.11 Power Supplies

Hot-swappable redundant power supplies.

Install dual, hot-plug redundant power supplies, sized accordingly to installed server hardware.

2.2.2 Workstation Hardware (Desktop)

Computer Workstation Hardware (workstation) shall be a standard desktop computer as indicated. Workstations shall meet the following minimum requirements.

2.2.2.1 Processor

Quad-core processor designed for desktop applications. Processor speed shall be at least 75 percent of the speed of the fastest Intel desktop processor commercially available.

2.2.2.2 Random Access Memory (RAM)

300 percent of the recommended requirements of the software to be installed on the server and no less than 8GB.

2.2.2.3 Communications Ports

Six USB ports.

2.2.2.4 Hard Drive and Controller

1TB or larger with a SATA-3 controller.

2.2.2.5 Optical Drive

8X DVD-RW drive

2.2.2.6 Video Output

32-bit color with dual monitor support minimum resolutions of 1920 by 1080 at minimum refresh rates of 70 Hz and supporting at minimum three DVI outputs and one large screen television display, using one or more graphic cards.

2.2.2.7 Network Interface

Integrated 1000Base-T Ethernet with RJ45 connector.

2.2.2.8 Monitor

Workstation displays will consist of a triple monitor configuration using widescreen flat panel LCD monitors no less than 24 inch nominal with minimum resolutions of 1920 by 1080 pixels and a minimum refresh rate of 70Hz. Additionally, wall mounted situation screens will be installed and controlled by each workstation.

2.2.2.9 Keyboard and Smart Card Reader

101 key wired USB keyboard having a minimum 64 character standard ASCII character set based on ANSI INCITS 154 and an integral smart card reader compatible with a Department of Defense Common Access Card (CAC).

2.2.2.10 Mouse

2-button wired USB optical scroll mouse with a minimum resolution of 400 dots per inch.

2.2.3 Printers

Printers shall be local or network printers. Local printers shall have a USB interface. Network printers shall have a 100Base-T or faster interface with an RJ45 connection and shall have a firmware print spooler compatible with the Operating System print spooler.

2.2.3.1 Laser Printer

Laser printers shall be black and white or color as shown and shall meet the following minimum requirements:

a. Resolution: 1200 by 1200 dots per inch.

b. Printing Time: 20 pages per minute.

c. Data Buffer Size: 256 Megabytes.

d. Media Type: Paper and transparency film.

e. Media Size: ANSI A (8.5 by 11 inches) and other sizes as shown.

f. Paper Cassette: 250 sheet capacity.

g. Automatic two-sided printing

2.3 COMPUTER SOFTWARE

2.3.1 Operating System (OS)

The contractor shall contact NAVFAC for the the applicable version of Microsoft Windows operating system that will be install on each workstation. The server operating system will be a Windows Server operating system both compatible with the installed Niagara service and that which is accepted by NAVFAC. The Operating System media will be furnished by the Government. Provide the Operating System license.

2.3.2 Office Automation Software

Office Automation Software shall consist of the e-mail, spreadsheet and word processing portions of the project site's standard office automation software.

2.3.3 Virus Protection Software

Virus Protection Software shall consist of the project site's standard virus protection software complete with a virus definition update subscription .

2.3.4 Disk Imaging (Backup) Software

Disk imaging (backup) software shall be capable of performing a bare-metal restore (imaging and restoring to a new blank hard drive such that restoration of the image is sufficient to restore system operation to the

imaged state without the need for re-installation of software)

2.3.5 Monitoring and Control (M&C) Controller Hardware Configuration Software

M&C Controller Hardware Configuration Software shall be the software required to configure, program, or configure and program each M&C Controller Hardware provided for the functions it performs.

2.3.6 Niagara Framework Engineering Tool

The Niagara Framework Engineering Tool shall be Niagara Workbench or an equivalent Niagara Framework engineering tool software and shall:

a. have an unrestricted interoperability license and its Niagara Compatability Statement (NiCS) shall follow the Tridium Open NiCS Specification.

b. be capable of performing network configuration for Niagara Framework Supervisory Gateways and Niagara Framework Monitoring and Control Software.

c. be capable of programming and configuring for Niagara Framework Supervisory Gateways and Niagara Framework Monitoring and Control Software.

d. be capable of discovery of Niagara Framework Supervisory Gateways and all points mapped into each Niagara Framework Supervisory Gateway and making these points accessible to Niagara Framework Monitoring and Control Software.

2.3.7 Monitoring and Control (M&C) Software

The monitoring and control (M&C) software shall be a client-server software package with a graphical user interface (GUI) using web-browser based clients. The Software shall be Niagara Framework AX Web Supervisor or equivalent Niagara Framework monitoring and control software and shall communicate with Niagara Framework field control systems using the Fox protocol. The M&C Software may support other field control protocols.

The Scheduling, Alarming, Trending, Graphical System Display, and System Display Editor functionality shall be implemented in a single software package. Other specified M&C functionality may be implemented in the same software package or in additional software packages. As specified in PART 3 EXECUTION, the M&C Software shall operate on Server hardware, except that software for Point Calculations and Demand Limiting may operate on M&C Controller Hardware.

2.3.7.1 Browser-Based Graphical User Interface (GUI)
The M&C Software shall include a web-browser based (client-server) graphical user interface. All M&C Software functionality, except for the Graphics Editor, System Display Editor, report configuration, point calculation configuration, and enterprise protocol configuration, shall be accessible through this graphical user interface.

Graphical user interface web server and web clients shall meet the following requirements:

a. The web server shall use HTTPS based on the Transport Layer Security

(TLS) Protocol in accordance with IETF RFC 5246 using a Government-furnished certificate.

b. The graphical user interface shall be Common Access Card (CAC) enabled: It shall support web client authentication using certificates obtained from a Department of Defense Common Access Card (CAC) Smart Card.

c. The web client shall operate on the Windows operating system version XP SP2 and on later Windows operating system versions.

d. The web client shall function in the most recent three version of Internet Explorer, Firefox, and Chrome.

e. The web client shall not require a connection to any server other than the M&C Server.

f. The web client shall function in a browser with Java, Shockwave, Silverlight, and Flash installed. The client may require a download of mobile code from the M&C Server, but shall not require the download of additional browser plug-ins or add-ins and there shall be no limit on the number of downloads. The client shall not require ActiveX.

2.3.7.2 Passwords

The M&C software shall provide user-based access control to M&C functionality. The M&C Software shall recognize at least 100 separate users and have at least 4 levels of user permissions. User permission levels (from most restrictive to most permissive) shall include:

a. Permission Level 1: View-only access to the graphical user interface.

b. Permission Level 2: Permission Level 1 plus acknowledge alarms and set up (configure) trends and reports.

c. Permission Level 3: Permission Level 2 plus override points and set up (configure) alarms, schedules and demand limiting.

d. Permission Level 4: Permission Level 3 plus create and modify Graphical System Displays using the System Display Editor.

Passwords shall not be displayed and shall not be logged. The system shall maintain a disk file on the server hardware logging all activity of the system. This file shall maintain, as a minimum, a record of all operators logged onto the system, alarm acknowledgments, commands issued and all database modifications. If the file format is not plain ASCII text, provide a means to export or convert the file to plain ASCII text. The system shall provide a mechanism for archiving the log files for long term record storage.

2.3.7.3 Graphical System Displays

The graphical displays shall consist of building system (air handler units, VAV boxes, chillers, cooling towers, boilers, etc.) graphic displays. Data associated with an active display shall be updated at least once every 5 seconds.

a. Navigation Scheme: System graphic displays of building systems and points shall be hierarchical displays using a building-to-equipment point-and-click navigation scheme which allows navigation from a

shipyard-wide display, through a building-wide display to the individual units. Each display shall show the building name and number. Each display shall show system wide data such as outside air temperature and humidity in the case of an HVAC system application.

(1) The shipyard-wide display will be presented as a base-wide map, with each networked facility highlighted and selectable, as well as containing a scrollable facility list. Each Building or Building Sub-Area display shall show the building foot print and basic floor plan, and shall clearly show and distinguish between the individual zones and the equipment serving each zone and space. The building display shall also show all space sensor and status readings, as applicable, for the individual zones such as space temperature, humidity, occupancy status, etc. The building display shall show the locations of individual pieces of monitored and controlled equipment.

(2) Each equipment display shall show a 3-dimensional representation of the individual pieces of equipment using the symbols and M&C point data types as specified. Different colors and textures shall be used to indicate various components and real time data. Color and texture meanings shall be consistent across all displays.

(3) Each display shall clearly distinguish between the following point data types and information:

(a) Real-time data.

(b) Other user-entered data.

(c) Devices in alarm (unacknowledged).

(d) Out-of-range, bad, or missing data.

b. Navigation Commands: The system displays shall support English language operator commands via point-and-click mouse or keyboard entry for defining and selecting points, parameters, graphics, report generation, and all other functions associated with operation. The operator commands shall be usable from any operator workstation with individual operator passwords as specified.

2.3.7.4 Graphic Editor

The graphic editor shall be a fully featured graphics editor and shall be capable of creating custom graphics and graphic symbols for use by the System Display Editor.

2.3.7.5 System Display Editor

The system display editor shall enable the user to create, modify, and delete graphic displays. The display editor may have a separate user interface and is not required to be accessible via the web browser interface. The display editor shall include the following functions:

a. Create and save displays. Save an existing or modified display as a new display (i.e. "save as")

b. Group and ungroup graphics, where graphics include both alphanumerics and graphic symbols. The grouped graphic shall be manipulated as a

single graphic.

c. Place, locate, resize, move, remove, reposition, rotate and mirror a graphic on a display.

d. Overlay graphics over other graphics and assign depths such that when there are coincident graphics the one on top is visible.

e. Modify graphic properties based on the value of network points and create conditions governing the display of a graphics such that different graphics are visible based on the value of network points or calculated points

f. Integrate real-time data with the display.

g. Establish connecting lines.

h. Establish sources of latest data and location of readouts.

i. Display analog values as specified.

j. Assign conditions which automatically initiate a system display.

k. Include a Symbols Library: The M&C Software shall include a library of display symbols which shall include: Pump, Motor, Two- and Three-way Valves, Flow Sensing Element, Point and Averaging Temperature Sensors, Pressure Sensor, Humidity Sensor, Single and Double Deck Air Handling Unit, Fan, Chiller, Boiler, Air Compressor, Chilled Water Piping, Steam Piping, Hot Water Piping, Ductwork, Unit Heater, Pressure Reducing Valve, Damper, Electric Meter, Limit Switch, Flow Switch, High- and Low- Point and Averaging Temperature Switches, High- and Low- Pressure Switches, Coil, Solenoid Valve, Filter, Condensing Unit, Cooling Tower, Variable Frequency Drive (VFD), Heat Exchanger, Current Sensing Relays, Generator, Circuit Breaker, Transformer, Tank, occupancy sensor, lighting density sensor, carbond dioxide sensor. Symbols shall at a minimum conform to ASHRAE FUN IP where applicable.

2.3.7.6 Scheduling

a. The M&C software shall be capable of performing time synchronization and configuring Niagara Framework Schedule Objects in Niagara Framework Supervisory Gateways.

b. The M&C Software shall include a scheduling graphic display, accessible via the graphical user interface, with the following fields and functions:

(1) Current date and time.

(2). System identifier(s) and name(s), including location information such as Building name(s) and number(s).

(3) System group. Systems shall be capable of being grouped by the user to perform according to a common schedule.

(4) Weekly schedules. Each system shall have a weekly schedule based on a seven day per week schedule with independent schedules for each day of the week including no less than 6 value changes per

day.

(5) Holiday and special event schedules. System scheduling shall support holiday and special event calendar schedules independent of the daily schedule. Special event schedules shall include one-time events and recurring events. Scheduling of one-time events shall include the beginning and ending dates and times of the event. Holiday and special event schedules shall have precedence over device weekly schedules.

2.3.7.7 Alarms

a. The M&C software shall be capable of configuring alarms in Niagara Framework Supervisory Gateways using the Niagara Alarm Service.

b. The M&C software shall be capable of handling (routing) alarms received from a Niagara Framework Supervisory Gateway.

c. The M&C software shall support Niagara Framework Alarm Classes.

d. The M&C software shall support at least two alarm priority levels: critical and informational. Critical alarms shall remain in alarm until acknowledged by an operator and the alarm condition no longer exists; informational alarms shall remain in alarm until the alarm condition no longer exists or until the alarm is acknowledged.

e. The creation, modification, and handling (routing) of alarms shall be fully accessible and fully adjustable from the graphical user interface.

f. Alarm Data. Alarm data to be displayed and stored shall include:

(1) Identification of alarm including building, system (or sub-system), and device name.

(2) Date and time to the nearest second of occurrence.

(3) Alarm type:

(a) Unreliable: Indicates that the source device has failed due to the sensing device or alarm parameter being out-of-range or bad data.

(b) High Alarm.

(c) Low Alarm.

(4) Current value or status of the alarm point, including engineering units

(5) Alarm limits, including engineering units.

(6) Alarm priority.

(7) Alarm Message: A unique message with a field of at least 60 characters. Assignment of messages to an alarm shall be an operator editable function.

(8)Acknowledgement status of the alarm including the time, date and

user of acknowledgement.

g. Alarm Notification and Routing: The M&C software shall be capable of performing alarm notification and routing functions. Upon receipt of the M&C software shall immediately perform alarm notification and routing according to an assigned routing for that alarm. The M&C software shall support at least 100 alarm routes; an alarm route shall be a unique combination of any of the following activities:

   (1) Generate a pop-up up active clients. The pop-up display shall include the Alarm Data. Alarms shall be capable of being acknowledged from the pop-up display by operators with sufficient permissions. Pop-up displays shall be displayed until acknowledged.

h. Alarm Display and Acknowledgement. The M&C software shall include an alarm display. Alarms shall be available for display at each workstation as shown, along with all associated alarm data. Alarms shall be capable of being acknowledged from this display. Multiple alarms shall be capable of being acknowledged using a single command. Operator acknowledgment of one alarm shall not automatically be considered as acknowledgment of any other alarm nor shall it inhibit reporting of subsequent alarms.

i. Alarm Storage and Reports: The M&C software shall store each alarm and its associated alarm data to hard disk and shall retain this information after the alarm no longer exists. The stored data shall be sortable, searchable, and printable.

2.3.7.8 Trending

The M&C software shall be capable of using the Niagara history service to create, modify, upload and archive trend log objects in Niagara Framework Supervisory Gateways.

The M&C Software shall include a graphical display for trend configuration, creation and deletion accessible through the graphical user interface. Each trend shall be user-configurable for:

a. Point to trend.

b. Sampling interval shall be adjustable between 1 second and 1 hour.

c. Start and Stop Time of Trend: Start and stop times shall be determined by one or more of the following methods:

   (1) Start time and stop time

   (2) Start time and duration

   (3) Start time and number of samples

The M&C software shall be capable of displaying and printing a graphical representation of each trend, and of multiple trended points on the same graph. The software shall be capable of saving trend logs to a file. If the file format is not plain ASCII text in a Comma-Separated-Value (CSV) format, provide a means to export or convert the file to plain ASCII text in a CSV format.

2.3.7.9 Report Generation

M&C Software shall be capable of generating, saving and printing reports. Dynamic operation of the system shall not be interrupted to generate a report. The report shall contain the time and date when the samples were taken, and the time and date when the report was generated. The software shall be capable of saving reports to a PDF file and to a file compatible with the provided Office Automation Software.

The software shall allow for automatic and manual generation of reports. For automatic reports an operator shall be able to specify the time the initial report is to be generated, the time interval between reports, end of period, and the output format for the report. Manual report generation shall allow for the operator to request at any time the output of any report. Reports shall include both tabular and graphical data presentation

The M&C software shall be capable of generating custom reports, including but not limited to the the following standard reports:

a. Energy usage Report: An energy usage summary, operator selectable, for a unit, building, area, installation, and the entire UMCS. The report shall be divided by utility, and shall be capable of reporting on at least four separate utilities. The report shall include the following information:

(1) Beginning and ending dates and times.

(2) Total energy usage and performance datafor each system or piece of equipment for the current and previous day.

(3) Total energy usage and performance datafor each system or piece of equipment for the current and previous month.

(4) Maximum 15-minute interval average rate of consumption and performance data for each system or piece of equipment for the current and previous day and current and previous month.

(5) Outside air (OA) temperature and OA humidity for current and previous month and current and previous day:

(a) Average temperature and humidity.

(b) Temperature and humidity at maximum and minimum OA temperature with time and date of occurrence.

(c) Temperature and humidity at maximum and minimum humidity with time and date of occurrence.

(d) Temperature and humidity at the installation's peak demand interval with the time and date of occurrence

(6) Calculated degree days. Reports which include humidity shall be configurable to report either dewpoint or relative humidity.

b. Alarm Report: Outstanding alarms by building or unit, including time of occurrence.

c. M&C Software Override Report: Points overridden by the M&C Software,

including time overridden, and identification of operator overriding the point.

d. Run Time Reports: A report totalizing the accumulated run time of individual pieces of equipment. The operator shall be able define equipment groupings and shall be able to generate reports based on these groupings.

e. Chiller usage Report: A report of the operation of each chiller as shown on a daily and monthly basis, for each of at least 10 discrete loading levels. The report shall include:

(1) Average power for the month at each level in kW

(2) Total monthly energy use in kWh at each level

(3) Total monthly energy use in kWh for the chiller (all levels)

(4) Total daily run hours at each level

(5) Total Monthly run hours at each level

f. Device Offline Report: A report listing all offline Niagara Framework Supervisory Gateways.

g. Interior Conditions Report: A report detailing interior facility conditions. The report shall include:

(1) Average and peak interior temperature by zone

(2) Average and peak interior relative humidity by zone

(3) Average and peak interior CO2 levels by zone

2.4 RACKS AND ENCLOSURES

2.4.1 Enclosures

Enclosures for installed equipment shall meet the following minimum requirements:

a. Outdoors: Enclosures located outdoors shall meet NEMA 250 Type 3, and where appropriate Type 4 requirements.

b. Mechanical and Electrical Rooms: Enclosures located in mechanical or electrical rooms shall meet NEMA 250 Type 4 requirements.

c. Other Locations: Enclosures in other locations including but not limited to occupied spaces, above ceilings, and plenum returns shall meet NEMA 250 Type 1 requirements.

Enclosures supplied as an integral (pre-packaged) part of another product are acceptable. Keys for lockable enclosures shall be furnished.

2.4.2 Equipment Racks

Equipment racks shall be standard 19 inch racks compatible with the electronic equipment provided. Racks shall be either aluminum or steel with bolted or welded construction. Steel equipment racks shall be painted with a flame-retardant paint. Guard rails shall be included with

each equipment rack and have a copper grounding bar installed and grounded to the earth.

Server racks in the telecommunications room shall be accessible from all sides.

PART 3 EXECUTION

3.1 FACTORY TEST

Perform factory testing of the UMCS as specified. The Contractor is responsible for providing personnel, equipment, instrumentation, and supplies necessary to perform required testing. Written notification of planned testing shall be given to the Government at least 21 days prior to testing, and in no case shall notice be given until after the Contractor has received written Government approval of the specific Factory Test Procedures. The Factory Test Procedures shall define the tests required to ensure that the system meets technical, operational, and performance specifications. The Procedures shall define location of tests, milestones for the tests, and identify simulation programs, equipment, personnel, facilities, and supplies required. The test procedures shall provide for testing all capabilities and functions specified and shown. The Procedures shall be developed from the design documentation. The Factory Test shall be performed using equipment and software of the same manufacturer, model and revision as will be used by the Contractor for the specified project. Procedures shall consist of detailed instructions for test setup, execution, and evaluation of test results. Upon completion of the test, prepare a Factory Test Report, documenting the results of the Test, and submit it as specified.

The Factory Test shall be performed and Factory Test Submittals shall be submitted as shown in TABLE II. FACTORY TEST SEQUENCING.

TABLE II. FACTORY TEST SEQUENCING

ITEM #	DESCRIPTION	SEQUENCING (START OF ACTIVITY or DEADLINE FOR SUBMITTAL)
1	Submit Factory Test Procedures	14 days after notice to proceed
2	Perform Factory Test	After Approval Of #1
3	Submit Factory Test Report	14 days After Completion Of #2

3.2 EXISTING CONDITIONS SURVEY

Perform a field survey, including but not limited to testing and inspection of equipment to be part of the UMCS, and submit an Existing Conditions Report documenting the current status and its impact on the Contractor's ability to meet this specification. For field control systems to be integrated to the UMCS which are not already connected to the UMCS IP network, verify the availability of the building network backbone at the FPOC location, and verify that FPOCs shown as existing are installed at the FPOC location.

3.3 DRAWINGS AND CALCULATIONS

3.3.1 UMCS IP Network Bandwidth Usage Estimate

Provide a UMCS IP Network Bandwidth Usage Estimate for a small, medium or large systems. In this estimate account for field control systems using all M&C required protocols and the integration of field control system via gateways. Define all assumptions used to create the estimate, including but not limited to: trending, fast trends for commissioning, schedules, alarms, display of system graphics and load shedding.

3.3.2 UMCS Contractor Design Drawings

Revise and update the Contract Drawings to include details of the system design and all hardware components, including contractor provided and Government furnished components. Drawings shall be provided on both ANSI B (11 by 17 inches) and ANSI D (22 by 34 inches) sheets. Details to be shown on the Design Drawing include:

a. The logical structure of the network, including but not limited to the location of all Control Hardware (including but not limited to each Control Protocol Gateway, Control Protocol Router, Niagara Framework Supervisory Gateway and Monitoring and Control (M&C) Controller).

b. Manufacturer and model number for each piece of Computer Hardware and Control Hardware.

c. Physical location for each piece of Computer Hardware and Control Hardware.

d. Version and service pack number for all software and for all Control Hardware firmware.

3.3.3 As-Built Drawings

Prepare draft as-built drawings consisting of Points Schedule drawings for the entire UMCS, including Points Schedules for each Gateway, and an updated Design Drawing including details of the actual installed system as it is at the conclusion of Start-Up and Start-Up Testing. As-Built Drawings shall include details of all hardware components, including contractor provided and Government furnished components. In addition to the details shown in the design drawings, the as-built drawing shall include:

a. IP address(es) and Ethernet MAC address(es) as applicable for each piece of Control Hardware (including but not limited to each Niagara Framework Supervisory Gateway, Control Protocol Gateway, Control Protocol Router, and Monitoring and Control (M&C) Controller).

b. IP address and Ethernet MAC address for each computer server, workstation, and networked printer.

c. Network identifier (name) for each printer, computer server and computer workstation.

d. List of ports, protocols and network services for each device connected to an IP network.

e. CEA-709.1-D address (domain, subnet, node address) for all Control Hardware using CEA-709.1-D.

f. ASHRAE 135 address and Object_ID of the Device Object for all Control Hardware using ASHRAE 135.

g. Modbus address for all Control Hardware using Modbus.

h. Niagara Framework Station ID for all Niagara Framework components including but not limited to Niagara Framework Supervisory Gateways and the AX Web Supervisor.

Prepare Draft As-Built Drawings upon the completion of Start-Up and Start-Up Testing and Final As-Built Drawings upon completion of PVT Phase II.

3.4 INSTALLATION REQUIREMENTS

3.4.1 General

Install system components as shown and specified and in accordance with the manufacturer's instructions and provide necessary interconnections, services, and adjustments required for a complete and operable system. Communication equipment and cable grounding shall be installed as necessary to preclude ground loops, noise, and surges from adversely affecting system operation. Fiber Optic cables and wiring in exposed areas, including low voltage wiring but not including network cable in telecommunication closets, shall be installed in metallic raceways or EMT conduit as specified in Section 26 20 00 INTERIOR DISTRIBUTION SYSTEM. Do not install equipment in any space which experiences temperatures or humidity outside of the rated operating range of the equipment.

3.4.2 Isolation, Building Penetrations and Equipment Clearance

The UMCS shall be completely installed and ready for operation, as specified and shown. Dielectric isolation shall be provided where dissimilar metals are used for connection and support. Penetrations through and mounting holes in the building exteriors shall be made watertight. Holes in concrete, brick, steel and wood walls shall be drilled or core drilled with proper equipment; conduits installed through openings shall be sealed with materials which are compatible with existing materials. Openings shall be sealed with materials which meet the requirements of NFPA 70 and SECTION 07 84 00 FIRESTOPPING.

3.4.3 Nameplates

Provide Nameplates for all Control Hardware and all Computer Hardware. Attach Nameplates to the device in a conspicuous location.

3.5 INSTALLATION OF EQUIPMENT

3.5.1 Wire and Cable Installation

System components and appurtenances shall be installed in accordance with NFPA 70, manufacturer's instructions and as shown. Necessary interconnections, services, and adjustments required for a complete and operable signal distribution system shall be provided. Components shall be labeled in accordance with TIA-606. Penetrations in fire-rated construction shall be firestopped in accordance with Section 07 84 00

FIRESTOPPING. Conduits, outlets and raceways shall be installed in accordance with Section 26 20 00 INTERIOR DISTRIBUTION SYSTEM. Wiring shall be installed in accordance with TIA-568-C.1 and as specified in Section 26 20 00 INTERIOR DISTRIBUTION SYSTEM. Wiring, and terminal blocks and outlets shall be marked in accordance with TIA-606. Non fiber-optic cables shall not be installed in the same cable tray, utility pole compartment, or floor trench compartment with power cables. Cables not installed in conduit or raceways shall be properly secured and neat in appearance.

3.5.2 Grounding

Signal distribution system ground shall be installed in accordance with TIA-607 and Section 26 20 00 INTERIOR DISTRIBUTION SYSTEM. Equipment racks shall be connected to the electrical safety ground.

3.5.3 Power-Line Surge Protection

Equipment connected to ac circuits shall be protected against or withstand power-line surges. Equipment protection shall meet the requirements of IEEE C62.41. Fuses shall not be used for surge protection.

3.5.4 IP Addresses

For all Control Hardware requiring an IP address on the UMCS IP Network, coordinate with the Base Communication Officer to obtain IP addresses .

3.5.5 Computer Hardware and Software

3.5.5.1 Hardware Installation

Computer Hardware shall be installed as shown. Computer Servers shall be powered through a UPS, and shall be installed and configured such that the server will automatically undergo a clean shutdown upon low battery signal from the UPS.

3.5.5.2 Software Installation

Install software as follows:

a. Niagara Framework Engineering Tool: Install the Niagara Framework Engineering Tool on the AX Web Supervisor Server. The Niagara Framework Engineering Tool shall be installed on workstation hardware.

b. Monitoring and Control Software: Install the monitoring and control (M&C)software as shown. Except for M&C Software performing Point Calculations or Electrical Peak Demand Limiting, install M&C Software on server hardware. Install M&C Software performing Point Calculations or Electrical Peak Demand Limiting on either server hardware or Monitoring and Control (M&C) Controller Hardware.

   Provide sufficient computer hardware and M&C Controller Hardware and install M&C Software to support the number of points required in PART 2 (PRODUCTS), regardless of the number of points integrated under this project specification. Note that meeting this requirement may entail the installation of unused hardware or spare point licenses to accommodate the full number of required points in order to allow for integration of future field control systems.

c. M&C Controller Hardware Configuration Software: Install the M&C Controller Hardware Configuration Software software on server hardware.

d. Operating system: Install the OS on each Server and Workstation and configure user names and passwords. Coordinate with PWD Shop Supervisor for user names and passwords.

e. Office Automation Software: Install the office automation software on each server and workstation.

f. Virus Protection software: Install the virus protection software on each server and workstation and configure weekly virus scans. Configure the virus protection software to update virus definitions automatically . Coordinate with appointed network supervisor to obtain update server information.

g. Disk Imaging (Backup) Software : Install the disk imaging (backup) software on each server and configure for imaging the internal hard drive to external hard drive.

Where software requires connection to an IP device outside of the UMCS, coordinate with NAVFAC to obtain access to a Government-furnished server to provide the needed functionality. No connection with a device outside of the UMCS shall be established without explicit permission from NAVFAC.

3.5.5.3 Monitoring and Control (M&C) Software Configuration

Configure the Monitoring and Control (M&C) Software as specified, as shown and as follows:

a. Set up M&C Software user accounts and passwords. Coordinate user accounts, passwords and permissions with the PWD shop supervisor.

b. Change the default password on all accounts. Remove or disable any accounts which do not require authentication (such as guest accounts).

d. Disable all ports, protocols, and network services other than those required or specifically permitted by this Section. Services to be disabled include but are not limited to: FTP, Telnet and SSH.

e. Install web server certificate. Obtain certificate from NAVFAC CIO.

3.5.5.4 Control Hardware Installation

Control Hardware shall be installed in a lockable enclosure and as specified. Configure Control Hardware as specified, as required to meet the functions for which the hardware used and as follows:

a. Disable all ports, protocols, and network services other than those required or specifically permitted by this Section. Services to be disabled include but are not limited to: FTP, Telnet, SSH, and HTTP. HTTP may be enabled for Niagara Framework Supervisory Gateways. When disabling of ports, protocols and services is not supported by a product, obtain an exception from this requirement prior to using the product and document non-compliance on the Product Data Sheets and

As-Built drawings.

b. Change the default passwords in all Control Hardware which have passwords. Coordinate new passwords with NAVFAC.

3.6 INTEGRATION OF FIELD CONTROL SYSTEMS

Install, initialize, start up, and troubleshoot operator interface software and functions (including operating system software, operator interface database, and third-party software installation and integration required for successful operator interface operation).

Contractor to integrate all control points including those associated with the sequence of operation, alarms and other data generated by field devices (whether controlling or reporting) that were specifically listed or named in the final approved shop drawings so that it is available on the ICS network.

Fully integrate the field control systems in accordance with the following three step sequence and as specified and shown.

STEP 1: Install and configure Control Hardware as necessary to provide a Field Point of Connection to connect the field control system to the UMCS IP network and, when necessary, to provide control protocol translation and supervisory functionality.

STEP 2: Add Field Control System to M&C Software: Perform system discovery, system database merges, or any other actions necessary to allow M&C Software access to the field control system.

STEP 3: Configure M&C Software to provide monitoring and control of the field control system, including but not limited to the creation of system displays and the configuration of scheduling, alarming, and trending.

3.6.1 Integration Step 1: Install Control Hardware

Install Control Hardware as specified at the FPOC location to connect the field control system to the UMCS IP network and, if necessary, to provide control protocol translation and supervisory functionality. Depending on the field control system media and protocol this shall be accomplished through one of the following:

a. Connect the existing field control network FPOC to the UMCS IP network. (Note: The existing FPOC will generally be a Niagara Framework Supervisory Gateway)

b. Install a Niagara Framework Supervisory Gateway connected to both the field control network and the UMCS IP network.

3.6.1.1 Installation of Niagara Framework Supervisory Gateway

Install Niagara Framework Supervisory Gateway hardware to connect the field control network to the UMCS IP network. Install additional field control system network media and hardware as needed to connect the Niagara Framework Supervisory Gateway to the field control system. The Niagara Framework Supervisory Gateway is the FPOC.

3.6.2 Integration Step 2: Add Field Control System to M&C Software

Perform system discovery, system database merges, or any other actions necessary to allow M&C Software access to points and data in the field control system.

3.6.2.1 Integration of Field Control Systems Via Niagara Framework

For each Niagara Framework Supervisory Gateway installed in integration step 1 for this project do both of the following:

a. Use the Niagara Framework Engineering Tool to fully discover the field control system and make all field control system information available to the Niagara Framework Supervisory Gateway.

b. Create and configure points and establish network communication between the Niagara Framework Supervisory Gateway and the field control system to provide points from the field control system to the M&C software and to provide support for supervisory functions, including but not limited to schedule objects, trend logs and alarming.

For each Niagara Framework Supervisory Gateway to be integrated as part of this project, make all information in the Niagara Framework Supervisory Gateway available to the M&C Software.

3.6.2.2 Integration of Field Control Systems Via Other (non-Niagara Framework (Fox Protocol)) Protocols

Perform all actions necessary to make all points as shown on the Points Schedule from the field control system available in the M&C Software.

3.6.3 Integration Step 3: Configure M&C Software

Configure M&C Software to provide monitoring and control of the field control system, including but not limited to the creation of system displays and the configuration of scheduling, alarming, and trending.

3.6.3.1 Configure M&C Software Communication

Create and configure points and establish network communication between M&C Software and Field Control Systems as specified to support M&C Software functionality:

a. Points on currently active displays shall be updated via polling as necessary to meet M&C Software display refresh requirements.

b. Points used for overrides shall be sent to the device receiving the override as shown on the Points Schedule.

c. Coordinate with NAVFAC to address requirements regarding the inclusion of Real Property Unique IDs (RPUID) in the description field of software points. If required, edit the Description field of each point to include the RPUID associated with that point as shown on the Points Schedule

Edit the Description field of each point to include the Real Property Unique IDs (RPUID) associated with that point as shown on the Points Schedule

3.6.3.2 Configure M&C Software Functionality

Configure M&C Software functionality as specified:

a. Create System Displays including overrides, as shown on the Points Schedule and as specified. Label all points on displays with the point description as shown on the Points Schedule. Configure user permissions for access to and executions of action using graphic pages. Coordinate user permissions with the ICS shop supervisor

b. Configure alarm handling.

c. Create and configure displays for configuration of M&C Software Schedule Objects. Label schedules and scheduled points with full English-language descriptors.

d. Trend points at 15 minute intervals.

   Create and configure displays for creation and configuration of trends and for display of all trended points.

e. Configure all field devices to routinely send their data to the SQL server via the historical data archiving server.

f. Configure M&C Software standard reports.

3.7 Programming

Provide graphics as specified. Display on each equipment's graphic page all of the associated input and output points and relevant calculated points. Point information on graphics shall dynamically update.

In addition to providing a graphical user interface specific to this project installation, update the existing ICS graphical user interface pages to incorporate the new work associated with this project. This shall include: 1-line diagrams corresponding to those already in the system, updating the values on graphical screens where there is now new data (or improved data), control of devices previously just monitored, and update data to be added to unit summary screens, utility screens, and all other aspects of the ICS system that are impacted by this project.

System shall generate maintenance alarms when equipment exceeds adjustable runtime, equipment starts, or performance limits.

3.7.1 Supervisory Controller

Synchronize controller time clocks daily from the Windows domain servers where capable or from the Niagara servers in the Operations Center.

Monitor controller and I/O point operation. System shall annunciate controller failure and I/O point locking (manual overriding to a fixed value).

3.8 Field Quality Control

Demonstrate compliance of the installed ICS components with the contract

documents. Furnish personnel, equipment, instrumentation, and supplies necessary to perform testing. Ensure that tests are performed by competent employees of the system installer or the system manufacturer regularly employed in the testing and calibration of Industrial Control Systems.

All points shall work end-to-end. The Government may choose to witness the working of any and all points.

3.9 START-UP AND START-UP TESTING

Test all equipment and perform all other tests necessary to ensure the system is installed and functioning as specified. Prepare a Start-Up and Start-Up Testing Report documenting all tests performed and their results and certifying that the system meets the requirements specified in the contract documents.

3.10 PERFORMANCE VERIFICATION TEST (PVT)

3.10.1 PVT Procedures

Demonstrate compliance of the control system with the contract documents. Using test plans and procedures previously approved by the Government, demonstrate all physical and functional requirements of the project. Upon completion of PVT Phase I and as specified, prepare and submit the PVT Phase I Report documenting all tests performed during the PVT and their results. The PVT report shall include all tests in the PVT Procedures and any other testing performed during the PVT. Failures and repairs shall be documented with test results.

Where practical, create the field conditions for change of state for digital inputs and verify proper reporting at the control system interface. The Contractor shall verify operation of systems in the specified failure modes upon system failure or loss of power, and verify that systems return to ICS control automatically upon a resumption of ICS operation or return of power.

The Contractor shall verify that graphic page content (the controlled equipment/systems
and their related values) correctly reflects the actual look, feel and operation of the equipment/systems, and that all content matches that approved by the Government during submittal review.

Application Software Operation Test: Test compliance of the application software for:

a. Editing Control programs: Demonstrate the ability to edit the control program off line.

b. Reporting of alarm conditions: Cause alarm conditions for each alarm, and ensure that workstations receive the alarms.

c. Reporting trend and status reports: Demonstrate ability of software to receive and save trend and status reports.

d. Network bandwidth usage and available bandwidth (throughput) measurements. Network bandwidth usage shall reference the normal usage network Bandwidth Calculations.

e. Test System Reaction during PVT: The total system response time from

initiation of a control action command from the workstation, to display of the resulting status change on the workstation shall not exceed 20 seconds under system normal heavy load conditions assuming a zero response time for operation of the node's control device.

f. Verification of IP Connectivity.

g. Verification of configuration of M&C Software functionality.

3.11 MAINTENANCE AND SERVICE

Perform inspection, testing, cleaning, and part or component replacement as specified and as required to maintain the warranty. Work includes providing necessary preventive and unscheduled maintenance and repairs to keep the UMCS operating as specified, and accepted by the Government, and other services as specified. Work shall comply with manufacturer's recommendations and industry standards. Provide technical support via telephone during regular working hours.

3.11.1 Work Coordination

Schedule and arrange work to cause the least interference with the normal Government business and mission. In those cases where some interference may be essentially unavoidable, coordinate with the Government to minimize the impact of the interference, inconvenience, equipment downtime, interrupted service and personnel discomfort.

3.11.2 Work Control

When the Contractor completes work on a system or piece of equipment, that system or piece of equipment shall be free of missing components or defects which would prevent it from functioning as originally intended and designed. Replacements shall conform to the same specifications as the original equipment. During and at completion of work, debris shall not be allowed to spread unnecessarily into adjacent areas nor accumulate in the work area itself.

3.11.3 Working Hours

Working hours are from 7:30 A.M. to 4:00 P.M. local time Mondays through Fridays except Federal holidays.

3.11.4 Equipment Repairs

Equipment repairs shall be initiated and completed within the following time periods. Time periods shall be measured as actual elapsed time from first notification, including working and non-working hours:

a. for non-redundant computer server hardware, initiate within 4 hours and complete within 8 hours.

b. for non-redundant computer workstation hardware, initiate within 4 hours and complete within 8 hours.

c. for redundant computer server hardware, initiate within 36 hours and complete within 5 days.

d. for redundant computer workstation hardware, initiate within 2 days and complete within 5 days.

e. for active (powered) control hardware, initiate within 4 hours and complete within 6 hours.

f. for cabling and other passive network hardware, initiate within 16 hours and complete within 5 days.

Repair is the restoration of a piece of equipment, a system, or a facility to such condition that it may be effectively used for its designated purposes. Repair may be overhaul, reprocessing, or replacement of nonfunctional parts or materials or replacement of the entire unit or system.

3.11.5 Replacement, Modernization, Renovation

The Government may replace, renovate, or install new equipment as part of the UMCS at Government expense and by means not associated with this contract without voiding the system warranty. Replaced, improved, updated, modernized, or renovated systems and equipment interfaced to the system may be added to the Contractor's maintenance and service effort as a modification.

3.11.6 Access To UMCS Equipment

Access shall be in accordance with the following:

a. Coordinate access to facilities and arrange that they be opened and closed during and after the accomplishment of the work effort. For access to a controlled facility contact the Government for assistance.

b. The Government may provide keys for access to UMCS equipment where the Government determines such key issuance is appropriate. Establish and implement methods of ensuring that keys issued by the Government are not lost or misplaced, are not used by unauthorized persons, and are not duplicated.

c. The Government may provide passwords or issue Common Access Cards (CAC) for access to UMCS computer equipment where the Government determines such issuance is appropriate. Establish and implement methods of ensuring that passwords and Common Access Cards issued by the Government are not used by unauthorized persons.

3.11.7 Records, Logs, and Progress Reports

Keep records and logs of each task, and organize cumulative chronological records for each major component, and for the complete system. Maintain a continuous log for the UMCS. Keep complete logs and be available for inspection on site, demonstrating that planned and systematic adjustments and repairs have been accomplished for the UMCS.

3.11.8 Preventive Maintenance Requirements

Prepare a Preventive Maintenance Work Plan as specified.

3.11.8.1 Preventive Maintenance Work Plan

Prepare a Preventive Maintenance Work Plan detailing all required preventive maintenance. Government approval of the Work Plan shall be obtained as specified in paragraph PROJECT SEQUENCING.

3.11.8.2 Maintenance Procedures

a. Maintenance Coordination: Any scheduled maintenance event that may result in component downtime shall be coordinated with the Government as follows. Time periods shall be measured as actual elapsed time from beginning of equipment off-line period, including working and non-working hours.

   (1) For non-redundant computer server hardware, provide 14 days notice, components shall be off-line for no more than 8 hours.

   (2) For non-redundant computer workstation hardware, provide 7 days notice, components shall be off-line for no more than 8 hours.

   (3) for redundant computer server hardware, provide 7 days notice, components shall be off-line for no more than 36 hours.

   (4) For redundant computer workstation hardware, provide 4 days notice, components shall be off-line for no more than 48 hours.

   (5) For active (powered) control hardware, provide 14 days notice, components shall be off-line for no more than 6 hours.

   (6) For cabling and other passive network hardware, provide 21 days notice, components shall be off-line for no more than 12 hours.

b. Software/Firmware: Software/firmware maintenance shall include operating systems, application programs, and files required for the proper operation of the UMCS regardless of storage medium. User (project site) developed software is not covered by this contract, except that the UMCS software/firmware shall be maintained to allow user creation, modification, deletion, and proper execution of such user-developed software as specified. Perform diagnostics and corrective reprogramming as required to maintain total UMCS operations as specified. Back up software before performing any computer hardware and software maintenance. Do not modify any parameters without approval from the Government. Properly document any approved changes and additions, and update the appropriate manuals.

c. Network: Network maintenance shall include testing transmission media and equipment to verify signal levels, system data rates, errors and overall system performance.

3.11.9 Service Call Reception

a. A Government representative will advise the Contractor by phone or in person of all maintenance and service requests, as well as the classification of each based on the definitions specified. A description of the problem or requested work, date and time notified, location, classification, and other appropriate information will be placed on a Service Call Work Authorization Form by the Government.

b. Submit procedures for receiving and responding to service calls 24 hours per day, seven days a week, including weekends and holidays . A single telephone number shall be provided by the Contractor for receipt of service calls during regular working hours. Service calls shall be considered received by the Contractor at the time and date

the telephone call is placed by the authorized Government representative.

c. Separately record each service call request, as received on the Service Call Work Authorization form and complete the Service Call Work Authorization form for each service call. The completed form shall include the serial number identifying the component involved, its location, date and time the call was received, nature of trouble, names of the service personnel assigned to the task, instructions describing what has to be done, the amount and nature of the materials to be used, the time and date work started, and the time and date of completion.

d. Respond to each service call request within two working hours. The status of any item of work must be provided within four hours of the inquiry during regular working hours, and within 16 hours after regular working hours or as needed to meet the Equipment Repair requirements as specified.

3.11.10 Service Call Work Warranty

Provide a 1 year unconditional warranty on service call work. The warranty shall include labor and material necessary to restore the equipment involved in the initial service call to a fully operable condition. In the event that Contractor service call work causes damage to additional equipment, the Contractor is liable for labor and material to restore the system to full operation. Contractor response to service call warranty work shall be the same as required by the initial service call.

3.11.11 System Modifications

Make recommendations for system modification in writing to the Government. No system modifications shall be made without prior approval of the Government. Any modifications made to the system shall be incorporated into the Operations and Maintenance Instructions, and other documentation affected. Make available to the Government software updates for all software furnished under this specification during the life of this contract. There shall be at least one scheduled update near the end of the contract period, at which time make available the latest released version of all software provided under this specification, and install and validate it upon approval by the Government.

3.12 TRAINING

Conduct training courses for designated personnel in the maintenance, service, and operation of the system as specified, including specified hardware and software. The training shall be oriented to the specific system provided under this contract. The Contractor is responsible for providing audiovisual equipment and other training material and supplies. When training is conducted at Government facilities, the Government reserves the right to record the training sessions for later use. A training day is defined as 8 hours of classroom instruction, excluding lunchtime, Monday through Friday, during the daytime shift in effect at the training facility. For guidance in planning the required instruction, the Contractor should assume that attendees will be tradesmen such as electricians or boiler operators. Approval of the Contractor's training schedule shall be obtained from the Government at least 30 days prior to the first day of training.

3.12.1 Training Documentation

Prepare and submit one set of Training manuals for each of Basic Training Documentation, Advanced Training Documentation, and Refresher Training Documentation. Documentation shall each consist of:

a. Course attendance list: A list of course attendees shall be developed in coordination with and signed by the ICSshop supervisor.

b. Training Manuals: Training manuals shall include an agenda, defined objectives for each lesson, and a detailed description of the subject matter for each lesson. Where the Contractor presents portions of the course material by audiovisuals, copies of those audiovisuals shall be delivered to the Government as a part of the printed training manuals.

3.12.2 Basic Training

The Basic Training course shall be taught at the project site on the installed system for a period of no less than 5 training days during Phase 2 of the PVT. A maximum of ten personnel will attend this course. This training shall be targeted towards training personnel in the day-to-day operation and basic maintenance of the system. Upon completion of this course, each student, using appropriate documentation, should be able to start the system, operate the system, recover the system after a failure, perform routine maintenance and describe the specific hardware architecture and operation of the system. This course shall at a minimum include:

a. General system architecture.

b. Functional operation of the system, including workstations and system navigation.

c. System start-up procedures.

d. Failure recovery procedures.

e. Schedule configuration.

f. Trend configuration.

g. Perform point overrides and override release.

h. Reports generation.

i. Alarm reporting and acknowledgements.

j. Diagnostics.

k. Historical files.

l. Maintenance procedures:

    (1) Physical layout of each piece of hardware.

    (2) Troubleshooting and diagnostic procedures.

    (3) Preventive maintenance procedures and schedules.

3.12.3 Advanced Training

The advanced operator course shall be taught off-site or at the project site for a period of not less then five days. A maximum of ten personnel will attend this course. The course shall consist of "hands-on" training under the constant monitoring of the instructor. Advanced Training shall include training on the M&C Software, and the Niagara Framework Engineering Tool. Upon completion of this course, the students should be fully proficient in the operation and management of all system operations and shall be able to perform all tasks required to integrate a field control system into the UMCS. Report the skill level of each student at the end of this course. This course shall at minimum include:

a. A review of all topics in Basic Training

b. Using the

c. M&C Software configuration, including but not limited to: creating and editing system displays, alarms, schedules, trends, demand limiting and calculations.

3.12.4 Refresher Training

The refresher course shall be taught at the project site for a period of two training days when approved by the Government and as specified in paragraph PROJECT SEQUENCING. A maximum of ten personnel will attend the course. The course shall be structured to address specific topics that the students need to discuss and to answer questions concerning the operation of the system. Upon completion of the course, the students should be fully proficient in system operation and have no unanswered questions regarding operation of the installed UMCS. Any system failures discovered during the Refresher Training shall be corrected by the Contractor at no cost to the Government.

APPENDIX A

QC CHECKLIST			
This checklist is not all-inclusive of the requirements of this specification and should not be interpreted as such.			
This checklist is for (check one:)			
	Pre-Construction QC Checklist Submittal (Items 1-2)		( )
	Post-Construction QC Checklist Submittal (Items 1-6)		( )
	Close-out QC Checklist Submittal (Items 1-14)		( )
Instructions: Initial each item in the space provided (|____|) verifying that the requirement has been met.			
The following items shall be verified for Pre-Construction, Post-Construction and Closeout QC Checklist Submittals:			
1	Contractor Design Drawing Riser Diagram includes location and types of all Control Hardware and Computer Hardware.		|____|
2	M&C Software supports the Niagara Framework .		|____|
The following items shall be verified for Post-Construction and Closeout QC Checklist Submittal:			
3	Communication between the M&C Software and Niagara Framework field control systems uses only Fox protocol.		|____|

	QC CHECKLIST		
4	Connections to field control systems are via Niagara Framework Supervisory Gateways.		|_____|
5	Computer workstations and servers are installed as shown on the UMCS Riser Diagram.		|_____|
6	Training schedule and course attendee lists have been developed and coordinated with shops and submitted.		|_____|
The following items shall be verified for Closeout QC Checklists Submittal:			
7	All points in field control systems have been discovered using the Niagara Framework Engineering Tool and are available at the M&C Software.		|_____|
8	All software has been licensed to the Government.		|_____|
9	M&C software monitoring displays have been created for all building systems, including all override and display points indicated on Points Schedule drawings.		|_____|
10	Final As-built Drawings accurately represent the final installed system.		|_____|
11	Default trends have been set up (per Points Schedule drawings).		|_____|
12	Scheduling has been configured at the M&C Software (per Occupancy Schedule drawing).		|_____|
13	O&M Instructions have been completed and submitted.		|_____|
14	Basic Operator and Advanced Training courses have been completed.		|_____|
	_____ _____		
	(QC Representative Signature) (Date)		

-- End of Section --

SECTION 26 00 00.00 20

BASIC ELECTRICAL MATERIALS AND METHODS
07/06

PART 1 GENERAL

1.1 REFERENCES

The publications listed below form a part of this specification to the extent referenced. The publications are referred to in the text by the basic designation only.

ASTM INTERNATIONAL (ASTM)

ASTM D709	(2013) Laminated Thermosetting Materials

INSTITUTE OF ELECTRICAL AND ELECTRONICS ENGINEERS (IEEE)

IEEE 100	(2000; Archived) The Authoritative Dictionary of IEEE Standards Terms
IEEE C2	(2012; Errata 2012; INT 1-4 2012; INT 5-7 2013) National Electrical Safety Code

NATIONAL ELECTRICAL MANUFACTURERS ASSOCIATION (NEMA)

NEMA 250	(2008) Enclosures for Electrical Equipment (1000 Volts Maximum)

NATIONAL FIRE PROTECTION ASSOCIATION (NFPA)

NFPA 70	(2014; AMD 1 2013; Errata 1 2013; AMD 2 2013; Errata 2 2013; AMD 3 2014; Errata 3 2014) National Electrical Code

1.2 RELATED REQUIREMENTS

This section applies to certain sections of Division 02, EXISTING CONDITIONS Division23, HEATING VENTILATING AND AIR CONDITIONING. This section applies to all sections of Division 26 and 33, ELECTRICAL and UTILITIES, of this project specification unless specified otherwise in the individual sections. This section has been incorporated into, and thus, does not apply to, and is not referenced in the following sections.

Section 26 20 00 INTERIOR DISTRIBUTION SYSTEM

1.3 DEFINITIONS

a. Unless otherwise specified or indicated, electrical and electronics terms used in these specifications, and on the drawings, shall be as defined in IEEE 100.

b. The technical sections referred to herein are those specification sections that describe products, installation procedures, and equipment operations and that refer to this section for detailed description of submittal types.

c. The technical paragraphs referred to herein are those paragraphs in PART 2 - PRODUCTS and PART 3 - EXECUTION of the technical sections that describe products, systems, installation procedures, equipment, and test methods.

1.4 ADDITIONAL SUBMITTALS INFORMATION

Submittals required in other sections that refer to this section must conform to the following additional requirements as applicable.

1.4.1 Shop Drawings (SD-02)

Include wiring diagrams and installation details of equipment indicating proposed location, layout and arrangement, control panels, accessories, piping, ductwork, and other items that must be shown to ensure a coordinated installation. Wiring diagrams shall identify circuit terminals and indicate the internal wiring for each item of equipment and the interconnection between each item of equipment. Drawings shall indicate adequate clearance for operation, maintenance, and replacement of operating equipment devices.

1.4.2 Product Data (SD-03)

Submittal shall include performance and characteristic curves.

1.5 QUALITY ASSURANCE

1.5.1 Regulatory Requirements

In each of the publications referred to herein, consider the advisory provisions to be mandatory, as though the word, "shall" had been substituted for "should" wherever it appears. Interpret references in these publications to the "authority having jurisdiction," or words of similar meaning, to mean the Contracting Officer. Equipment, materials, installation, and workmanship shall be in accordance with the mandatory and advisory provisions of NFPA 70 unless more stringent requirements are specified or indicated.

1.5.2 Standard Products

Provide materials and equipment that are products of manufacturers regularly engaged in the production of such products which are of equal material, design and workmanship. Products shall have been in satisfactory commercial or industrial use for 2 years prior to bid opening. The 2-year period shall include applications of equipment and materials under similar circumstances and of similar size. The product shall have been on sale on the commercial market through advertisements, manufacturers' catalogs, or brochures during the 2-year period. Where two or more items of the same class of equipment are required, these items shall be products of a single manufacturer; however, the component parts of the item need not be the products of the same manufacturer unless stated in the technical section.

1.5.2.1 Alternative Qualifications

Products having less than a 2-year field service record will be acceptable if a certified record of satisfactory field operation for not less than 6000 hours, exclusive of the manufacturers' factory or laboratory tests, is furnished.

1.5.2.2 Material and Equipment Manufacturing Date

Products manufactured more than 3 years prior to date of delivery to site shall not be used, unless specified otherwise.

1.6 WARRANTY

The equipment items shall be supported by service organizations which are reasonably convenient to the equipment installation in order to render satisfactory service to the equipment on a regular and emergency basis during the warranty period of the contract.

1.7 POSTED OPERATING INSTRUCTIONS

Provide for each system and principal item of equipment as specified in the technical sections for use by operation and maintenance personnel. The operating instructions shall include the following:

a. Wiring diagrams, control diagrams, and control sequence for each principal system and item of equipment.

b. Start up, proper adjustment, operating, lubrication, and shutdown procedures.

c. Safety precautions.

d. The procedure in the event of equipment failure.

e. Other items of instruction as recommended by the manufacturer of each system or item of equipment.

Print or engrave operating instructions and frame under glass or in approved laminated plastic. Post instructions where directed. For operating instructions exposed to the weather, provide weather-resistant materials or weatherproof enclosures. Operating instructions shall not fade when exposed to sunlight and shall be secured to prevent easy removal or peeling.

1.8 MANUFACTURER'S NAMEPLATE

Each item of equipment shall have a nameplate bearing the manufacturer's name, address, model number, and serial number securely affixed in a conspicuous place; the nameplate of the distributing agent will not be acceptable.

1.9 FIELD FABRICATED NAMEPLATES

ASTM D709. Provide laminated plastic nameplates for each equipment enclosure, relay, switch, and device; as specified in the technical sections or as indicated on the drawings. Each nameplate inscription shall identify the function and, when applicable, the position. Nameplates shall be melamine plastic, 0.125 inch thick, white with black

center core. Surface shall be matte finish. Corners shall be square. Accurately align lettering and engrave into the core. Minimum size of nameplates shall be one by 2.5 inches. Lettering shall be a minimum of 0.25 inch high normal block style.

1.10 ELECTRICAL REQUIREMENTS

Electrical installations shall conform to IEEE C2, NFPA 70, and requirements specified herein.

1.11 INSTRUCTION TO GOVERNMENT PERSONNEL

Where specified in the technical sections, furnish the services of competent instructors to give full instruction to designated Government personnel in the adjustment, operation, and maintenance of the specified systems and equipment, including pertinent safety requirements as required. Instructors shall be thoroughly familiar with all parts of the installation and shall be trained in operating theory as well as practical operation and maintenance work. Instruction shall be given during the first regular work week after the equipment or system has been accepted and turned over to the Government for regular operation. The number of man-days (8 hours per day) of instruction furnished shall be as specified in the individual section. When more than 4 man-days of instruction are specified, use approximately half of the time for classroom instruction. Use other time for instruction with equipment or system. When significant changes or modifications in the equipment or system are made under the terms of the contract, provide additional instructions to acquaint the operating personnel with the changes or modifications.

PART 2 PRODUCTS

2.1 FACTORY APPLIED FINISH

Electrical equipment shall have factory-applied painting systems which shall, as a minimum, meet the requirements of NEMA 250 corrosion-resistance test.

PART 3 EXECUTION

3.1 FIELD APPLIED PAINTING

Paint electrical equipment as required to match finish of adjacent surfaces or to meet the indicated or specified safety criteria. Painting shall be as specified in the section specifying the associated electrical equipment.

3.2 FIELD FABRICATED NAMEPLATE MOUNTING

Provide number, location, and letter designation of nameplates as indicated. Fasten nameplates to the device with a minimum of two sheet-metal screws or two rivets.

3.3 WARNING SIGN MOUNTING

Provide the number of signs required to be readable from each accessible side, but space the signs a maximum of 30 feet apart.

-- End of Section --

SECTION 26 20 00

INTERIOR DISTRIBUTION SYSTEM
02/14

PART 1 GENERAL

1.1 REFERENCES

The publications listed below form a part of this specification to the extent referenced. The publications are referred to in the text by the basic designation only.

ASTM INTERNATIONAL (ASTM)

ASTM B1	(2013) Standard Specification for Hard-Drawn Copper Wire
ASTM B8	(2011) Standard Specification for Concentric-Lay-Stranded Copper Conductors, Hard, Medium-Hard, or Soft
ASTM D709	(2013) Laminated Thermosetting Materials

INSTITUTE OF ELECTRICAL AND ELECTRONICS ENGINEERS (IEEE)

IEEE 100	(2000; Archived) The Authoritative Dictionary of IEEE Standards Terms
IEEE C2	(2012; Errata 2012; INT 1-4 2012; INT 5-7 2013) National Electrical Safety Code

INTERNATIONAL ELECTRICAL TESTING ASSOCIATION (NETA)

NETA ATS	(2013) Standard for Acceptance Testing Specifications for Electrical Power Equipment and Systems

NATIONAL ELECTRICAL MANUFACTURERS ASSOCIATION (NEMA)

ANSI C80.1	(2005) American National Standard for Electrical Rigid Steel Conduit (ERSC)
ANSI C80.3	(2005) American National Standard for Electrical Metallic Tubing (EMT)
NEMA FU 1	(2012) Low Voltage Cartridge Fuses
NEMA ICS 1	(2000; R 2008; E 2010) Standard for Industrial Control and Systems: General Requirements
NEMA ICS 6	(1993; R 2011) Enclosures
NEMA KS 1	(2013) Enclosed and Miscellaneous Distribution Equipment Switches (600 V Maximum)

NEMA ST 20	(1992; R 1997) Standard for Dry-Type Transformers for General Applications
NEMA TP 1	(2002) Guide for Determining Energy Efficiency for Distribution Transformers
NEMA WD 1	(1999; R 2005; R 2010) Standard for General Color Requirements for Wiring Devices
NEMA WD 6	(2012) Wiring Devices Dimensions Specifications
NEMA Z535.4	(2011) American National Standard for Product Safety Signs and Labels

NATIONAL FIRE PROTECTION ASSOCIATION (NFPA)

NFPA 70	(2014; AMD 1 2013; Errata 1 2013; AMD 2 2013; Errata 2 2013; AMD 3 2014; Errata 3 2014) National Electrical Code
NFPA 70E	(2012; Errata 2012) Standard for Electrical Safety in the Workplace

TELECOMMUNICATIONS INDUSTRY ASSOCIATION (TIA)

TIA-568-C.1	(2009; Add 2 2011; Add 1 2012) Commercial Building Telecommunications Cabling Standard
TIA-569	(2012c; Addendum 1 2013; Errata 2013) Commercial Building Standard for Telecommunications Pathways and Spaces
TIA-607	(2011b) Generic Telecommunications Bonding and Grounding (Earthing) for Customer Premises

U.S. DEPARTMENT OF DEFENSE (DOD)

UFC 3-310-04	(2013) Seismic Design for Buildings

UNDERWRITERS LABORATORIES (UL)

UL 1	(2005; Reprint Jul 2012) Standard for Flexible Metal Conduit
UL 1242	(2006; Reprint Mar 2014) Standard for Electrical Intermediate Metal Conduit -- Steel
UL 1561	(2011; Reprint Sep 2012) Dry-Type General Purpose and Power Transformers
UL 1569	(1999; Reprint Jan 2012) Standard for Metal-Clad Cables
UL 20	(2010; Reprint Feb 2012) General-Use Snap

	Switches
UL 2043	(2013) Fire Test for Heat and Visible Smoke Release for Discrete Products and Their Accessories Installed in Air-Handling Spaces
UL 360	(2013; Reprint Aug 2014) Liquid-Tight Flexible Steel Conduit
UL 4248-1	(2007; Reprint Oct 2013) UL Standard for Safety Fuseholders - Part 1: General Requirements
UL 4248-12	(2007; Reprint Dec 2012) UL Standard for Safety Fuseholders - Part 12: Class R
UL 486A-486B	(2013; Reprint Feb 2014) Wire Connectors
UL 486C	(2013; Reprint Feb 2014) Splicing Wire Connectors
UL 489	(2013; Reprint Mar 2014) Molded-Case Circuit Breakers, Molded-Case Switches, and Circuit-Breaker Enclosures
UL 498	(2012; Reprint Feb 2014) Attachment Plugs and Receptacles
UL 50	(2007; Reprint Apr 2012) Enclosures for Electrical Equipment, Non-environmental Considerations
UL 508	(1999; Reprint Oct 2013) Industrial Control Equipment
UL 510	(2005; Reprint Jul 2013) Polyvinyl Chloride, Polyethylene and Rubber Insulating Tape
UL 514A	(2013) Metallic Outlet Boxes
UL 514B	(2012; Reprint Jun 2014) Conduit, Tubing and Cable Fittings
UL 514C	(2014) Nonmetallic Outlet Boxes, Flush-Device Boxes, and Covers
UL 6	(2007; reprint Nov 2010) Electrical Rigid Metal Conduit-Steel
UL 67	(2009; Reprint Jan 2013) Standard for Panelboards
UL 797	(2007; Reprint Dec 2012) Electrical Metallic Tubing -- Steel
UL 83	(2014) Thermoplastic-Insulated Wires and Cables

UL 870	(2008; Reprint Feb 2013) Standard for Wireways, Auxiliary Gutters, and Associated Fittings
UL 943	(2006; Reprint Jun 2012) Ground-Fault Circuit-Interrupters

1.2 DEFINITIONS

Unless otherwise specified or indicated, electrical and electronics terms used in these specifications, and on the drawings, are as defined in IEEE 100.

1.3 SUBMITTALS

Government approval is required for submittals with a "G" designation; submittals not having a "G" designation are for Contractor Quality Control approval. Submit the following in accordance with Section 01 33 00.

SD-02 Shop Drawings

Panelboards

Transformers

Include wiring diagrams and installation details of equipment indicating proposed location, layout and arrangement, control panels, accessories, piping, ductwork, and other items that must be shown to ensure a coordinated installation. Identify circuit terminals on wiring diagrams and indicate the internal wiring for each item of equipment and the interconnection between each item of equipment. Indicate on the drawings adequate clearance for operation, maintenance, and replacement of operating equipment devices.

Wireways

Marking strips drawings

SD-03 Product Data

Receptacles

Circuit breakers

Switches

Enclosed circuit breakers

Manual motor starters

Include performance and characteristic curves.

SD-06 Test Reports

600-volt wiring test

Grounding system test

Ground-fault receptacle test

SD-07 Certificates

Fuses

SD-10 Operation and Maintenance Data

Electrical Systems, Data Package 5

Submit operation and maintenance data in accordance with Section 01 78 23, OPERATION AND MAINTENANCE DATA and as specified herein.

1.4 QUALITY ASSURANCE

1.4.1 Fuses

Submit coordination data as specified in paragraph, FUSES of this section.

1.4.2 Regulatory Requirements

In each of the publications referred to herein, consider the advisory provisions to be mandatory, as though the word, "shall" or "must" had been substituted for "should" wherever it appears. Interpret references in these publications to the "authority having jurisdiction," or words of similar meaning, to mean the Contracting Officer. Provide equipment, materials, installation, and workmanship in accordance with the mandatory and advisory provisions of NFPA 70 unless more stringent requirements are specified or indicated.

1.4.3 Standard Products

Provide materials and equipment that are products of manufacturers regularly engaged in the production of such products which are of equal material, design and workmanship and:

a. Have been in satisfactory commercial or industrial use for 2 years prior to bid opening including applications of equipment and materials under similar circumstances and of similar size.

b. Have been on sale on the commercial market through advertisements, manufacturers' catalogs, or brochures during the 2-year period.

c. Where two or more items of the same class of equipment are required, provide products of a single manufacturer; however, the component parts of the item need not be the products of the same manufacturer unless stated in this section.

1.4.3.1 Alternative Qualifications

Products having less than a 2-year field service record will be acceptable if a certified record of satisfactory field operation for not less than 6000 hours, exclusive of the manufacturers' factory or laboratory tests, is furnished.

1.4.3.2 Material and Equipment Manufacturing Date

Products manufactured more than 3 years prior to date of delivery to site

are not acceptable.

1.5 MAINTENANCE

1.5.1 Electrical Systems

Submit operation and maintenance manuals for electrical systems that provide basic data relating to the design, operation, and maintenance of the electrical distribution system for the building. Include the following:

a. Single line diagram of the "as-built" building electrical system.

b. Schematic diagram of electrical control system (other than HVAC, covered elsewhere).

c. Manufacturers' operating and maintenance manuals on active electrical equipment.

1.6 WARRANTY

Provide equipment items supported by service organizations that are reasonably convenient to the equipment installation in order to render satisfactory service to the equipment on a regular and emergency basis during the warranty period of the contract.

1.7 SEISMIC REQUIREMENTS

Provide seismic details as specified under UFC 3-310-04.

PART 2 PRODUCTS

2.1 MATERIALS AND EQUIPMENT

As a minimum, meet requirements of UL, where UL standards are established for those items, and requirements of NFPA 70 for all materials, equipment, and devices.

2.2 CONDUIT AND FITTINGS

Conform to the following:

2.2.1 Rigid Metallic Conduit

2.2.1.1 Rigid, Threaded Zinc-Coated Steel Conduit

ANSI C80.1, UL 6.

2.2.2 Intermediate Metal Conduit (IMC)

UL 1242, zinc-coated steel only.

2.2.3 Electrical, Zinc-Coated Steel Metallic Tubing (EMT)

UL 797, ANSI C80.3.

2.2.4 Flexible Metal Conduit

UL 1.

2.2.4.1 Liquid-Tight Flexible Metal Conduit, Steel

UL 360.

2.2.5 Fittings for Metal Conduit, EMT, and Flexible Metal Conduit

UL 514B. Ferrous fittings: cadmium- or zinc-coated in accordance with UL 514B.

2.2.5.1 Fittings for Rigid Metal Conduit and IMC

Threaded-type. Split couplings unacceptable.

2.2.5.2 Fittings for EMT

Steelcompression type.

2.3 SURFACE RACEWAY

2.4 OPEN TELECOMMUNICATIONS CABLE SUPPORT

2.4.1 Closed Ring Cable Supports

Provide closed ring cable supports in accordance with UL 2043. Provide galvanized steelclosed ring cable supports.

2.5 OUTLET BOXES AND COVERS

UL 514A, cadmium- or zinc-coated, if ferrous metal. UL 514C, if nonmetallic.

2.5.1 Outlet Boxes for Telecommunications System

Provide the following:

a. Standard type 4 inches square by 2 1/8 inches deep

b. Outlet boxes for wall-mounted telecommunications outlets: 4 by 2 1/8 by 2 1/8 inches deep.

c. Depth of boxes: large enough to allow manufacturers' recommended conductor bend radii.

d. Outlet boxes for fiber optic telecommunication outlets: include a minimum 3/8 inch deep single or two gang plaster ring as shown and installed using a minimum 1 inch conduit system.

e. Outlet boxes for handicapped telecommunications station: 4 by 2 1/8 by 2 1/8 inches deep.

2.6 CABINETS, JUNCTION BOXES, AND PULL BOXES

Volume greater than 100 cubic inches, UL 50, hot-dip, zinc-coated, if sheet steel.

2.7 WIRES AND CABLES

Provide wires and cables in accordance applicable requirements of NFPA 70 and UL for type of insulation, jacket, and conductor specified or

indicated. Do not use wires and cables manufactured more than 12 months prior to date of delivery to site.

2.7.1 Conductors

Provide the following:

a. Conductor sizes and capacities shown are based on copper, unless indicated otherwise.

b. Conductors No. 8 AWG and larger diameter: stranded.

c. Conductors No. 10 AWG and smaller diameter: solid.

d. Conductors for remote control, alarm, and signal circuits, classes 1, 2, and 3: stranded unless specifically indicated otherwise.

e. All conductors: copper. Conductors indicated to be No. 6 AWG or smaller diameter: copper. Conductors indicated to be No. 4 AWG and larger diameter: copper , unless type of conductor material is specifically indicated, or specified, or required by equipment manufacturer.

2.7.1.1 Equipment Manufacturer Requirements

When manufacturer's equipment requires copper conductors at the terminations or requires copper conductors to be provided between components of equipment, provide copper conductors or splices, splice boxes, and other work required to satisfy manufacturer's requirements.

2.7.1.2 Minimum Conductor Sizes

Provide minimum conductor size in accordance with the following:

a. Branch circuits: No. 12 AWG.

b. Class 1 remote-control and signal circuits: No. 14 AWG.

c. Class 2 low-energy, remote-control and signal circuits: No. 16 AWG.

d. Class 3 low-energy, remote-control, alarm and signal circuits: No. 22 AWG.

2.7.2 Color Coding

Provide color coding for service, feeder, branch, control, and signaling circuit conductors.

2.7.2.1 Ground and Neutral Conductors

Provide color coding of ground and neutral conductors as follows:

a. Grounding conductors: Green.

b. Neutral conductors: White.

c. Exception, where neutrals of more than one system are installed in same raceway or box, other neutrals color coding: white with a different colored (not green) stripe for each.

2.7.2.2 Ungrounded Conductors

Provide color coding of ungrounded conductors in different voltage systems as follows:

a. 208/120 volt, three-phase

(1) Phase A - black

(2) Phase B - red

(3) Phase C - blue

b. 480/277 volt, three-phase

(1) Phase A - brown

(2) Phase B - orange

(3) Phase C - yellow

c. 120/240 volt, single phase: Black and red

2.7.3 Insulation

Unless specified or indicated otherwise or required by NFPA 70, provide power and lighting wires rated for 600-volts, Type THWN/THHN conforming to UL 83, except that grounding wire may be type TW conforming to UL 83; remote-control and signal circuits: Type TW or TF, conforming to UL 83. Where lighting fixtures require 90-degree Centigrade (C) conductors, provide only conductors with 90-degree C insulation or better.

2.7.4 Bonding Conductors

ASTM B1, solid bare copper wire for sizes No. 8 AWG and smaller diameter; ASTM B8, Class B, stranded bare copper wire for sizes No. 6 AWG and larger diameter.

2.7.4.1 Telecommunications Bonding Backbone (TBB)

Provide a copper conductor TBB in accordance with TIA-607 with No. 6 AWG minimum size, and sized at 2 kcmil per linear foot of conductor length up to a maximum size of 3/0 AWG. Provide insulated TBB with insulation as specified in the paragraph INSULATION and meeting the fire ratings of its pathway.

2.7.4.2 Bonding Conductor for Telecommunications

Provide a copper conductor Bonding Conductor for Telecommunications between the telecommunications main grounding busbar (TMGB) and the electrical service ground in accordance with TIA-607. Size the bonding conductor for telecommunications the same as the TBB.

2.7.5 Metal-Clad Cable

UL 1569; NFPA 70, Type MC cable.

2.8 SPLICES AND TERMINATION COMPONENTS

UL 486A-486B for wire connectors and UL 510 for insulating tapes. Connectors for No. 10 AWG and smaller diameter wires: insulated, pressure-type in accordance with UL 486A-486B or UL 486C (twist-on splicing connector). Provide solderless terminal lugs on stranded conductors.

2.9 DEVICE PLATES

Provide the following:

a. UL listed, one-piece device plates for outlets to suit the devices installed.

b. For metal outlet boxes, plates on unfinished walls: zinc-coated sheet steel or cast metal having round or beveled edges.

c. For nonmetallic boxes and fittings, other suitable plates may be provided.

d. Plates on finished walls: nylon or lexan, minimum 0.03 inch wall thickness and same color as receptacle or toggle switch with which they are mounted.Finish shall be coordinated with architect prior to purchase.

e. Plates on finished walls: satin finish stainless steel or brushed-finish aluminum, minimum 0.03 inch thick.Finish shall be coordinated with architect prior to purchase.

f. Screws: machine-type with countersunk heads in color to match finish of plate.

g. Sectional type device plates are not be permitted.

h. Plates installed in wet locations: gasketed and UL listed for "wet locations."

2.10 SWITCHES

2.10.1 Toggle Switches

NEMA WD 1, UL 20, single pole, double pole, three-way, and four-way, totally enclosed with bodies of thermoplastic or thermoset plastic and mounting strap with grounding screw. Include the following:

a. Handles: white, ivoryor brown thermoplastic.Colors to math existing coordinate with architect prior to purchase.

b. Wiring terminals: screw-type, side-wired or of the solderless pressure type having suitable conductor-release arrangement.

c. Contacts: silver-cadmium and contact arm - one-piece copper alloy.

d. Switches: rated quiet-type ac only, 120/277 volts, with current rating and number of poles indicated.

2.10.2 Disconnect Switches

NEMA KS 1. Provide heavy duty-type switches where indicated, where switches are rated higher than 240 volts, and for double-throw switches. Utilize Class R fuseholders and fuses for fused switches, unless indicated otherwise. Provide horsepower rated for switches serving as the motor-disconnect means. Provide switches in NEMA,, _or specific NEMA configuration to meet environmental conditions_, as indicated per NEMA ICS 6.

2.11 FUSES

NEMA FU 1. Provide complete set of fuses for each fusible switch. Coordinate time-current characteristics curves of fuses serving motors or connected in series with circuit breakers or other circuit protective devices for proper operation. Submit coordination data for approval. Provide fuses with a voltage rating not less than circuit voltage.

2.11.1 Fuseholders

Provide in accordance with UL 4248-1.

2.11.2 Cartridge Fuses, Current Limiting Type (Class R)

Class RK-5. Provide only Class R associated fuseholders in accordance with UL 4248-12.

2.11.3 Cartridge Fuses, High-Interrupting Capacity, Current Limiting Type (Classes J, L, and CC)

Class J for zero to 600 amperes, Class L for 601 to 6,000 amperes, and Class CC for zero to 30 amperes.

2.12 RECEPTACLES

Provide the following:

a. UL 498, hard use (also designated heavy-duty), grounding-type.

b. Ratings and configurations: as indicated.

c. Bodies: white ivoryor brown as per NEMA WD 1.Coordinate color with architects prior to installation.

d. Face and body: thermoplastic supported on a metal mounting strap.

e. Dimensional requirements: per NEMA WD 6.

f. Screw-type, side-wired wiring terminals or of the solderless pressure type having suitable conductor-release arrangement.

g. Grounding pole connected to mounting strap.

h. The receptacle: containing triple-wipe power contacts and double or triple-wipe ground contacts.

2.12.1 Weatherproof Receptacles

Provide receptacles, UL listed for use in "wet locations". Include cast

metal box with gasketed, hinged, lockable and weatherproof while-in-use, polycarbonate, UV resistant/stabilized cover plate.

2.12.2 Ground-Fault Circuit Interrupter Receptacles

UL 943, duplex type for mounting in standard outlet box. Provide device capable of detecting current leak of 6 milliamperes or greater and tripping per requirements of UL 943 for Class A ground-fault circuit interrupter devices. Provide screw-type, side-wired wiring terminals or pre-wired (pigtail) leads.

2.12.3 Special Purpose Receptacles

Receptacles serving certain equipment are special purpose. Provide in ratings indicated.

2.13 PANELBOARDS

Provide panelboards in accordance with the following:

a. UL 67 and UL 50 having a short-circuit current rating of 10,000 amperes symmetrical minimum. Match ATC of existing panels.

b. Panelboards: circuit breaker-equipped.

c. Designed such that individual breakers can be removed without disturbing adjacent units or without loosening or removing supplemental insulation supplied as means of obtaining clearances as required by UL.

d. "Specific breaker placement" is required in panelboards to match the breaker placement indicated in the panelboard schedule on the drawings.

e. Use of "Subfeed Breakers" is not acceptable unless specifically indicated otherwise.

f. Main breaker: "separately" mounted "above" or "below" branch breakers, to accomodate specific conditions encountered.

g. Where "space only" is indicated, make provisions for future installation of breakers.

h. Directories: indicate load served by each circuit in panelboard.

i. Directories: indicate source of service to panelboard (e.g., Panel PA served from Panel MDP).

j. Provide new directories for existing panels modified by this project as indicated.

k. Type directories and mount in holder behind transparent protective covering.

l. Panelboards: listed and labeled for their intended use.

m. Panelboard nameplates: provided in accordance with paragraph FIELD FABRICATED NAMEPLATES.

2.13.1 Enclosure

Provide panelboard enclosure in accordance with the following:

a. UL 50.

b. Cabinets mounted outdoors or flush-mounted: hot-dipped galvanized after fabrication.

c. Cabinets: painted in accordance with paragraph PAINTING.

d. Outdoor cabinets: NEMA 3R raintight with conduit hubs welded to the cabinet.

e. Front edges of cabinets: form-flanged or fitted with structural shapes welded or riveted to the sheet steel, for supporting the panelboard front.

f. All cabinets: fabricated such that no part of any surface on the finished cabinet deviates from a true plane by more than 1/8 inch.

g. Holes: provided in the back of indoor surface-mounted cabinets, with outside spacers and inside stiffeners, for mounting the cabinets with a 1/2 inch clear space between the back of the cabinet and the wall surface.

h. Flush doors: mounted on hinges that expose only the hinge roll to view when the door is closed.

i. Each door: fitted with a combined catch and lock, except that doors over 24 inches long provided with a three-point latch having a knob with a T-handle, and a cylinder lock.

j. Keys: two provided with each lock, with all locks keyed alike.

k. Finished-head cap screws: provided for mounting the panelboard fronts on the cabinets.

2.13.2 Panelboard Buses

Support bus bars on bases independent of circuit breakers. Design main buses and back pans so that breakers may be changed without machining, drilling, or tapping. Provide isolated neutral bus in each panel for connection of circuit neutral conductors. Provide separate ground bus identified as equipment grounding bus per UL 67 for connecting grounding conductors; bond to steel cabinet. In addition to equipment grounding bus, provide second "isolated" ground bus, where indicated.

2.13.2.1 Panelboard Neutrals for Non-Linear Loads

Provide in accordance with the following:.

a. UL listed, with panelboard type specifically UL heat rise tested for use on non-linear loads.

b. Panelboard: heat rise tested in accordance with UL 67, except with the neutral assembly installed and carrying 200 percent of the phase bus current during testing.

c. Verification of the testing procedure: provided upon request.

d. Two neutral assemblies paralleled together with cable is not acceptable.

e. Nameplates for panelboard rated for use on non-linear loads: marked "SUITABLE FOR NON-LINEAR LOADS" and in accordance with paragraph FIELD FABRICATED NAMEPLATES.

f. Provide a neutral label with instructions for wiring the neutral of panelboards rated for use on non-linear loads.

2.13.3 Circuit Breakers

UL 489, thermal magnetic-type having a minimum short-circuit current rating equal to the short-circuit current rating of the panelboard in which the circuit breaker will be mounted. Breaker terminals: UL listed as suitable for type of conductor provided. Where indicated on the drawings, provide circuit breakers with shunt trip devices. Series rated circuit breakers and plug-in circuit breakers are unacceptable.

2.13.3.1 Multipole Breakers

Provide common trip-type with single operating handle. Design breaker such that overload in one pole automatically causes all poles to open. Maintain phase sequence throughout each panel so that any three adjacent breaker poles are connected to Phases A, B, and C, respectively.

2.13.3.2 Circuit Breaker With Ground-Fault Circuit Interrupter

UL 943 and NFPA 70. Provide with "push-to-test" button, visible indication of tripped condition, and ability to detect and trip on current imbalance of 6 milliamperes or greater per requirements of UL 943 for Class A ground-fault circuit interrupter.

2.13.3.3 Circuit Breakers for HVAC Equipment

Provide circuit breakers for HVAC equipment having motors (group or individual) marked for use with HACR type and UL listed as HACR type.

2.14 ENCLOSED CIRCUIT BREAKERS

UL 489. Individual molded case circuit breakers with voltage and continuous current ratings, number of poles, overload trip setting, and short circuit current interrupting rating as indicated. Enclosure type as indicated. Provide solid neutral.

2.15 MOTOR SHORT-CIRCUIT PROTECTOR (MSCP)

Motor short-circuit protectors, also called motor circuit protectors (MCPs): UL 508 and UL 489, and provided as shown. Provide MSCPs that consist of an adjustable instantaneous trip circuit breaker used only in conjunction with a combination motor controller which provides coordinated motor branch-circuit overload and short-circuit protection. Rate MSCPs in accordance with the requirements of NFPA 70.

2.16 TRANSFORMERS

Provide transformers in accordance with the following:

a. NEMA ST 20, general purpose, dry-type, self-cooled, ventilated.

b. Provide transformers in NEMA 1 or 3R or other NEMA enclosure. Enclosure shall be suitable for environment where unit is installed.

c. Transformer insulation system:

(1) 220 degrees C insulation system for transformers 15 kVA and greater, with temperature rise not exceeding 150 degrees C under full-rated load in maximum ambient of 40 degrees C.

(2) 180 degrees C insulation for transformers rated 10 kVA and less, with temperature rise not exceeding 115 degrees C under full-rated load in maximum ambient of 40 degrees C.

e. Transformer of 115 degrees C temperature rise: capable of carrying continuously 115 percent of nameplate kVA without exceeding insulation rating.

2.16.1 Specified Transformer Efficiency

Transformers, indicated and specified with: 480V primary, 80 degrees C or 115 degrees C temperature rise, kVA ratings of 37.5 to 100 for single phase or 30 to 500 for three phase, energy efficient type. Minimum efficiency, based on factory test results: not be less than NEMA Class 1 efficiency as defined by NEMA TP 1.

2.16.2 Transformers With Non-Linear Loads

Provide transformers for non-linear loads in accordance with the following:

a. Transformer insulation: UL recognized 220 degrees C system. Neither the primary nor the secondary temperature is allowed to exceed 220 degrees C at any point in the coils while carrying their full rating of non-sinusoidal load.

b. Transformers are to be UL listed and labeled for K-13 in accordance with UL 1561.

c. Transformers evaluated by the UL K-Factor evaluation: listed for 115 degrees C average temperature rise only.

d. Transformers with K-Factor ratings with temperature rise of 150 degrees C rise are not acceptable.

e. K-Factor rated transformers impedance: allowed range of 3 percent to 5 percent, with a minimum reactance of 2 percent to prevent excessive neutral current when supplying loads with large amounts of third harmonic.

2.17 MANUAL MOTOR STARTERS (MOTOR RATED SWITCHES)

SingleDoubleorThree pole designed for surface mounting with overload protection.

2.18 TELECOMMUNICATIONS SYSTEM

Provide system of telecommunications wire-supporting structures (pathway),

including: outlet boxes, conduits with pull wires wireways, and other accessories for telecommunications outlets and pathway in accordance with TIA-569 and as specified herein.

2.19 BACKBOARDS

Provide void-free, fire rated interior grade plywood, 3/4 inch thick, 4 by 8 feet. Do not cover the fire stamp on the backboard.

2.20 MANUFACTURER'S NAMEPLATE

Provide on each item of equipment a nameplate bearing the manufacturer's name, address, model number, and serial number securely affixed in a conspicuous place; the nameplate of the distributing agent will not be acceptable.

2.21 FIELD FABRICATED NAMEPLATES

Provide field fabricated nameplates in accordance with the following:

a. ASTM D709.

b. Provide laminated plastic nameplates for each equipment enclosure, relay, switch, and device; as specified or as indicated on the drawings.

c. Each nameplate inscription: identify the function and, when applicable, the position.

d. Nameplates: melamine plastic, 0.125 inch thick, white with black center core.

e. Provide red laminated plastic label with white center core where indicatedfor fire alarm equipment.

f. Surface: matte finish. Corners: square. Accurately align lettering and engrave into the core.

g. Minimum size of nameplates: one by 2.5 inches.

h. Lettering size and style: a minimum of 0.25 inch high normal block style.

2.22 WARNING SIGNS

Provide warning signs for flash protection in accordance with NFPA 70E and NEMA Z535.4 for switchboards, panelboards, industrial control panels, and motor control centers that are in other than dwelling occupancies and are likely to require examination, adjustment, servicing, or maintenance while energized. Provide field installed signs to warn qualified persons of potential electric arc flash hazards when warning signs are not provided by the manufacturer. Provide marking that is clearly visible to qualified persons before examination, adjustment, servicing, or maintenance of the equipment.

2.23 FIRESTOPPING MATERIALS

Provide firestopping around electrical penetrations in accordance with Section 07 84 00, FIRESTOPPING .

2.24 WIREWAYS

UL 870. Material: steel epoxy painted 16 gauge for heights and depths up to 6 by 6 inches, and 14 gauge for heights and depths up to 12 by 12 inches. Provide in length required for the application with screw- cover NEMA 1or 3R enclosure per NEMA ICS 6.

2.25 SOURCE QUALITY CONTROL

2.25.1 Transformer Factory Tests

Submittal: include routine NEMA ST 20 transformer test results on each transformer and also provide the results of NEMA "design" and "prototype" tests that were made on transformers electrically and mechanically equal to those specified.

PART 3 EXECUTION

3.1 INSTALLATION

Electrical installations, including weatherproof and hazardous locations and ducts, plenums and other air-handling spaces: conform to requirements of NFPA 70 and IEEE C2 and to requirements specified herein.

3.1.1 Wiring Methods

Provide insulated conductors installed in rigid steel conduit, IMC, rigid nonmetallic conduit, or EMT, except where specifically indicated or specified otherwise or required by NFPA 70 to be installed otherwise. Grounding conductor: separate from electrical system neutral conductor. Provide insulated green equipment grounding conductor for circuit(s) installed in conduit and raceways. Minimum conduit size: 1/2 inch in diameter for low voltage lighting and power circuits. Vertical distribution in multiple story buildings: made with metal conduit in fire-rated shafts, with metal conduit extending through shafts for minimum distance of 6 inches. Firestop conduit which penetrates fire-rated walls, fire-rated partitions, or fire-rated floors in accordance with Section 07 84 00, FIRESTOPPING.

3.1.1.1 Metal Clad Cable

Install in accordance with NFPA 70, Type MC cable.

3.1.2 Conduit Installation

Unless indicated otherwise, conceal conduit under floor slabs and within finished walls, ceilings, and floors. Keep conduit minimum 6 inches away from parallel runs of flues and steam or hot water pipes. Install conduit parallel with or at right angles to ceilings, walls, and structural members where located above accessible ceilings and where conduit will be visible after completion of project. Run conduits as if exposed.

3.1.2.1 Restrictions Applicable to EMT

a. Do not install underground.

b. Do not encase in concrete, mortar, grout, or other cementitious materials.

c. Do not use in areas subject to severe physical damage including but not limited to equipment rooms where moving or replacing equipment could physically damage the EMT.

d. Do not use in hazardous areas.

e. Do not use outdoors.

f. Do not use in fire pump rooms.

g. Do not use when the enclosed conductors must be shielded from the effects of High-altitude Electromagnetic Pulse (HEMP).

3.1.2.2 Restrictions Applicable to Flexible Conduit

Use only as specified in paragraph FLEXIBLE CONNECTIONS. Do not use when the enclosed conductors must be shielded from the effects of High-altitude Electromagnetic Pulse (HEMP).

3.1.2.3 Conduit Support

Support conduit by pipe straps, wall brackets, threaded rod conduit hangers, or ceiling trapeze. Fasten by wood screws to wood; by toggle bolts on hollow masonry units; by concrete inserts or expansion bolts on concrete or brick; and by machine screws, welded threaded studs, or spring-tension clamps on steel work. Threaded C-clamps may be used on rigid steel conduit only. Do not weld conduits or pipe straps to steel structures. Do not exceed one-fourth proof test load for load applied to fasteners. Provide vibration resistant and shock-resistant fasteners attached to concrete ceiling. Do not cut main reinforcing bars for any holes cut to depth of more than 1 1/2 inches in reinforced concrete beams or to depth of more than 3/4 inch in concrete joints. Fill unused holes. In partitions of light steel construction, use sheet metal screws. In suspended-ceiling construction, run conduit above ceiling. Do not support conduit by ceiling support system. Conduit and box systems: supported independently of both (a) tie wires supporting ceiling grid system, and (b) ceiling grid system into which ceiling panels are placed. Do not share supporting means between electrical raceways and mechanical piping or ducts. Coordinate installationwith above-ceiling mechanical systems to assure maximum accessibility to all systems. Spring-steel fasteners may be used for lighting branch circuit conduit supports in suspended ceilings in dry locations. Support exposed risers in wire shafts of multistory buildings by U-clamp hangers at each floor level and at 10 foot maximum intervals. Where conduit crosses building expansion joints, provide suitable expansion fitting that maintains conduit electrical continuity by bonding jumpers or other means. For conduits greater than 2 1/2 inches inside diameter, provide supports to resist forces of 0.5 times the equipment weight in any direction and 1.5 times the equipment weight in the downward direction.

3.1.2.4 Directional Changes in Conduit Runs

Make changes in direction of runs with symmetrical bends or cast-metal fittings. Make field-made bends and offsets with hickey or conduit-bending machine. Do not install crushed or deformed conduits. Avoid trapped conduits. Prevent plaster, dirt, or trash from lodging in conduits, boxes, fittings, and equipment during construction. Free clogged conduits of obstructions.

3.1.2.5 Locknuts and Bushings

Fasten conduits to sheet metal boxes and cabinets with two locknuts where required by NFPA 70, where insulated bushings are used, and where bushings cannot be brought into firm contact with the box; otherwise, use at least minimum single locknut and bushing. Provide locknuts with sharp edges for digging into wall of metal enclosures. Install bushings on ends of conduits, and provide insulating type where required by NFPA 70.

3.1.2.6 Flexible Connections

Provide flexible steel conduit between 3 and 6 feet in length for recessed and semirecessed lighting fixtures; for equipment subject to vibration, noise transmission, or movement; and for motors. Install flexible conduit to allow 20 percent slack. Minimum flexible steel conduit size: 1/2 inch diameter. Provide liquidtight flexible conduit in wet and damp locations for equipment subject to vibration, noise transmission, movement or motors. Provide separate ground conductor across flexible connections.

3.1.2.7 Telecommunications and Signal System Pathway

Install telecommunications pathway in accordance with TIA-569.

a. Horizontal Pathway: Telecommunications pathways from the work area to the telecommunications room: installed and cabling length requirements in accordance with TIA-568-C.1. Size conduits&, wireways in accordance with TIA-569.

b. Backbone Pathway: Telecommunication pathways from the telecommunications entrance facility to telecommunications rooms, and, telecommunications equipment rooms : installed in accordance with TIA-569. Size conduits for telecommunications risers in accordance with TIA-569.

3.1.3 Telecommunications Cable Support Installation

Install open top and closed ring cable supports on 4 ft to 5 ft centers to adequately support and distribute the cable’s weight. Use these types of supports to support a maximum of 50 0.25 in diameter cables. Install suspended cables with at least 3 in of clear vertical space above the ceiling tiles and support channels (T-bars). Open top and closed ring cable supports: suspended from or attached to the structural ceiling or walls with hardware or other installation aids specifically designed to support their weight.

3.1.4 Boxes, Outlets, and Supports

Provide boxes in wiring and raceway systems wherever required for pulling of wires, making connections, and mounting of devices or fixtures. Boxes for metallic raceways: cast-metal, hub-type when located in wet locations, when surface mounted on outside of exterior surfaces, and when specifically indicated. Boxes in other locations: sheet steel, except that aluminum boxes may be used with aluminum conduit. Provide each box with volume required by NFPA 70 for number of conductors enclosed in box. Boxes for mounting lighting fixtures: minimum 4 inches square, or octagonal, except that smaller boxes may be installed as required by fixture configurations, as approved. Boxes for use in masonry-block or tile walls: square-cornered, tile-type, or standard boxes having

square-cornered, tile-type covers. Provide gaskets for cast-metal boxes installed in wet locations and boxes installed flush with outside of exterior surfaces. Provide separate boxes for flush or recessed fixtures when required by fixture terminal operating temperature; provide readily removable fixturesfor access to boxes unless ceiling access panels are provided. Support boxes and pendants for surface-mounted fixtures on suspended ceilings independently of ceiling supports. Fasten boxes and supports with wood screws on wood, with bolts and expansion shields on concrete or brick, with toggle bolts on hollow masonry units, and with machine screws or welded studs on steel. In open overhead spaces, cast boxes threaded to raceways need not be separately supported except where used for fixture support; support sheet metal boxes directly from building structure or by bar hangers. Where bar hangers are used, attach bar to raceways on opposite sides of box, and support raceway with approved-type fastener maximum 24 inches from box. When penetrating reinforced concrete members, avoid cutting reinforcing steel.

3.1.4.1 Boxes

Boxes for use with raceway systems: minimum 1 1/2 inches deep, except where shallower boxes required by structural conditions are approved. Boxes for other than lighting fixture outlets: minimum 4 inches square, except that 4 by 2 inch boxes may be used where only one raceway enters outlet. Telecommunications outlets: a minimum of 4 11/16 inches square by 2 1/8 inches deep, except for wall mounted telephones and outlet boxes for handicap telephone stations. Mount outlet boxes flush in finished walls.

3.1.4.2 Pull Boxes

Construct of at least minimum size required by NFPA 70 of code-gauge aluminum or galvanized sheet steel, except where cast-metal boxes are required in locations specified herein. Provide boxes with screw-fastened covers. Where several feeders pass through common pull box, tag feeders to indicate clearly electrical characteristics, circuit number, and panel designation.

3.1.4.3 Extension Rings

Extension rings are not permitted for new construction. Use only on existing boxes in concealed conduit systems where wall is furred out for new finish.

3.1.5 Mounting Heights

Mount panelboards, circuit breakers, and disconnecting switches so height of operating handle at its highest position is maximum 78 inches above floor. Mount lighting switches and handicapped telecommunications stations 48 inches above finished floor. Mount receptacles and telecommunications outlets 18 inches above finished floor, unless otherwise indicated. Mount other devices as indicated. Measure mounting heights of wiring devices and outletsto center of device or outlet.

3.1.6 Conductor Identification

Provide conductor identification within each enclosure where tap, splice, or termination is made. For conductors No. 6 AWG and smaller diameter, provide color coding by factory-applied, color-impregnated insulation. For conductors No. 4 AWG and larger diameter, provide color coding by

plastic-coated, self-sticking markers; colored nylon cable ties and plates; or heat shrink-type sleeves.

3.1.6.1 Marking Strips

Provide marking strips in accordance with the following:

a. Provide white or other light-colored plastic marking strips, fastened by screws to each terminal block, for wire designations.

b. Use permanent ink for the wire numbers

c. Provide reversible marking strips to permit marking both sides, or provide two marking strips with each block.

d. Size marking strips to accommodate the two sets of wire numbers.

e. Assign a device designation in accordance with NEMA ICS 1 to each device to which a connection is made. Mark each device terminal to which a connection is made with a distinct terminal marking corresponding to the wire designation used on the Contractor's schematic and connection diagrams.

f. The wire (terminal point) designations used on the Contractor's wiring diagrams and printed on terminal block marking strips may be according to the Contractor's standard practice; however, provide additional wire and cable designations for identification of remote (external) circuits for the Government's wire designations.

g. Prints of the marking strips drawings submitted for approval will be so marked and returned to the Contractor for addition of the designations to the terminal strips and tracings, along with any rearrangement of points required.

3.1.7 Splices

Make splices in accessible locations. Make splices in conductors No. 10 AWG and smaller diameter with insulated, pressure-type connector. Make splices in conductors No. 8 AWG and larger diameter with solderless connector, and cover with insulation material equivalent to conductor insulation.

3.1.8 Covers and Device Plates

Install with edges in continuous contact with finished wall surfaces without use of mats or similar devices. Plaster fillings are not permitted. Install plates with alignment tolerance of 1/16 inch. Use of sectional-type device plates are not permitted. Provide gasket for plates installed in wet locations.

3.1.9 Electrical Penetrations

Seal openings around electrical penetrations through fire resistance-rated walls, partitions, floors, or ceilings in accordance with Section 07 84 00 FIRESTOPPING.

3.1.10 Grounding and Bonding

Provide in accordance with NFPA 70. Ground exposed, non-current-carrying

metallic parts of electrical equipment, access flooring support system, metallic raceway systems, grounding conductor in metallic and nonmetallic raceways, telecommunications system grounds, and neutral conductor of wiring systems. In addition to the requirements specified herein, provide telecommunications grounding in accordance with TIA-607. Where ground fault protection is employed, ensure that connection of ground and neutral does not interfere with correct operation of fault protection.

3.1.10.1 Telecommunications System

Provide telecommunications grounding in accordance with the following:

a. Telecommunications Grounding Busbars: Provide a telecommunications main grounding busbar (TMGB) in the telecommunications entrance facility. Install the TMGB as close to the electrical service entrance grounding connection as practicable. Provide a telecommunications grounding busbar (TGB) in all other telecommunications rooms and telecommunications equipment rooms. Install the TGB as close to the telecommunications room panelboard as practicable, when equipped. Where a panelboard for telecommunications equipment is not installed in the telecommunications room, locate the TGB near the backbone cabling and associated terminations. In addition, locate the TGB to provide for the shortest and straightest routing of the grounding conductors. Where a panelboard for telecommunications equipment is located within the same room or space as a TGB, bond that panelboard's alternating current equipment ground (ACEG) bus (when equipped) or the panelboard enclosure to the TGB. Install telecommunications grounding busbars to maintain clearances as required by NFPA 70 and insulated from its support. A minimum of 2 inches separation from the wall is recommended to allow access to the rear of the busbar and adjust the mounting height to accommodate overhead or underfloor cable routing.

c. Telecommunications Grounding Connections: Telecommunications grounding connections to the TGB: utilize listed compression two-hole lugs, exothermic welding, suitable and equivalent one hole non-twisting lugs, or other irreversible compression type connections. Bond all metallic pathways, cabinets, and racks for telecommunications cabling and interconnecting hardware located within the same room or space as the TGB . In a metal frame (structural steel) building, where the steel framework is readily accessible within the room; bond each TGB to the vertical steel metal frame using a minimum No. 6 AWG conductor. Where the metal frame is external to the room and readily accessible, bond the metal frame to the TGB or TMGB with a minimum No. 6 AWG conductor. When practicable because of shorter distances and, where horizontal steel members are permanently electrically bonded to vertical column members, the TGB may be bonded to these horizontal members in lieu of the vertical column members. All connectors used for bonding to the metal frame of a building must be listed for the intended purpose.

3.1.11 Equipment Connections

Provide power wiring for the connection of motors and control equipment under this section of the specification. Except as otherwise specifically noted or specified, automatic control wiring, control devices, and protective devices within the control circuitry are not included in this

section of the specifications and are provided under the section specifying the associated equipment.

3.1.12 Repair of Existing Work

Perform repair of existing work, demolition, and modification of existing electrical distribution systems as follows:

3.1.12.1 Workmanship

Lay out work in advance. Exercise care where cutting, channeling, chasing, or drilling of floors, walls, partitions, ceilings, or other surfaces is necessary for proper installation, support, or anchorage of conduit, raceways, or other electrical work. Repair damage to buildings, piping, and equipment using skilled craftsmen of trades involved.

3.1.12.2 Existing Concealed Wiring to be Removed

Disconnect existing concealed wiring to be removed from its source. Remove conductors; cut conduit flush with floor, underside of floor, and through walls; and seal openings.

3.1.12.3 Removal of Existing Electrical Distribution System

Removal of existing electrical distribution system equipment includes equipment's associated wiring, including conductors, cables, exposed conduit, surface metal raceways, boxes, and fittings, back to equipment's power source as indicated.

3.1.12.4 Continuation of Service

Maintain continuity of existing circuits of equipment to remain. Maintain existing circuits of equipment energized. Restore circuits wiring and power which are to remain but were disturbed during demolition back to original condition.

3.1.13 Surge Protective Devices

Connect the surge protective devices in parallel to the power source, keeping the conductors as short and straight as practically possible. Maximum allowed lead length is 3 feet.

3.2 FIELD FABRICATED NAMEPLATE MOUNTING

Provide number, location, and letter designation of nameplates as indicated. Fasten nameplates to the device with a minimum of two sheet-metal screws or two rivets.

3.3 WARNING SIGN MOUNTING

Provide the number of signs required to be readable from each accessible side. Space the signs in accordance with NFPA 70E.

3.4 FIELD APPLIED PAINTING

Paint electrical equipment as required to match finish of adjacent surfaces or to meet the indicated or specified safety criteria. Where field painting of enclosures for panelboards, load centers or the like is specified to match adjacent surfaces, to correct damage to the

manufacturer's factory applied coatings, or to meet the indicated or specified safety criteria, provide manufacturer's recommended coatings and apply in accordance to manufacturer's instructions.

3.5 FIELD QUALITY CONTROL

Furnish test equipment and personnel and submit written copies of test results. Give Contracting Officer 5 working days notice prior to each test.

3.5.1 Devices Subject to Manual Operation

Operate each device subject to manual operation at least five times, demonstrating satisfactory operation each time.

3.5.2 600-Volt Wiring Test

Test wiring rated 600 volt and less to verify that no short circuits or accidental grounds exist. Perform insulation resistance tests on wiring No. 6 AWG and larger diameter using instrument which applies voltage of approximately 500 volts to provide direct reading of resistance. Minimum resistance: 250,000 ohms.

3.5.3 Transformer Tests

Perform the standard, not optional, tests in accordance with the Inspection and Test Procedures for transformers, dry type, air-cooled, 600 volt and below; as specified in NETA ATS. Measure primary and secondary voltages for proper tap settings. Tests need not be performed by a recognized independent testing firm or independent electrical consulting firm.

3.5.4 Ground-Fault Receptacle Test

Test ground-fault receptacles with a "load" (such as a plug in light) to verify that the "line" and "load" leads are not reversed.

3.5.5 Grounding System Test

Test grounding system to ensure continuity, and that resistance to ground is not excessive. Test each ground rod for resistance to ground before making connections to rod; tie grounding system together and test for resistance to ground. Make resistance measurements in dry weather, not earlier than 48 hours after rainfall. Submit written results of each test to Contracting Officer, and indicate location of rods as well as resistance and soil conditions at time measurements were made.

-- End of Section --

SECTION 26 33 53.00 20

UNINTERRUPTIBLE POWER SUPPLY (UPS)
04/08

PART 1 GENERAL

1.1 REFERENCES

The publications listed below form a part of this specification to the extent referenced. The publications are referred to within the text by the basic designation only.

ACOUSTICAL SOCIETY OF AMERICA (ASA)

ASA S1.4	(1983; Amendment 1985; R 2006) Specification for Sound Level Meters (ASA 47)

ASTM INTERNATIONAL (ASTM)

ASTM D709	(2013) Laminated Thermosetting Materials

INSTITUTE OF ELECTRICAL AND ELECTRONICS ENGINEERS (IEEE)

IEEE 100	(2000; Archived) The Authoritative Dictionary of IEEE Standards Terms
IEEE 450	(2010) Recommended Practice for Maintenance, Testing, and Replacement of Vented Lead-Acid Batteries for Stationary Applications
IEEE C2	(2012; Errata 2012; INT 1-4 2012; INT 5-7 2013) National Electrical Safety Code
IEEE C57.110	(2008) Recommended Practice for Establishing Liquid-Filled and Dry-Type Power and Distribution Transformer Capability When Supplying Nonsinusoidal Load Currents
IEEE C62.41.1	(2002; R 2008) Guide on the Surges Environment in Low-Voltage (1000 V and Less) AC Power Circuits
IEEE C62.41.2	(2002) Recommended Practice on Characterization of Surges in Low-Voltage (1000 V and Less) AC Power Circuits

INTERNATIONAL ELECTRICAL TESTING ASSOCIATION (NETA)

NETA ATS	(2013) Standard for Acceptance Testing Specifications for Electrical Power Equipment and Systems

INTERNATIONAL ORGANIZATION FOR STANDARDIZATION (ISO)

ISO 9001	(2008; Corr 1 2009) Quality Management Systems- Requirements

NATIONAL ELECTRICAL MANUFACTURERS ASSOCIATION (NEMA)

NEMA 250	(2008) Enclosures for Electrical Equipment (1000 Volts Maximum)
NEMA PE 1	(2003) Uninterruptible Power Systems (UPS) Specification and Performance Verification

NATIONAL FIRE PROTECTION ASSOCIATION (NFPA)

NFPA 70	(2014; AMD 1 2013; Errata 1 2013; AMD 2 2013; Errata 2 2013; AMD 3 2014; Errata 3 2014) National Electrical Code

U.S. DEPARTMENT OF DEFENSE (DOD)

UFC 3-310-04	(2013) Seismic Design for Buildings

UNDERWRITERS LABORATORIES (UL)

UL 1449	(2014) Surge Protective Devices
UL 1778	(2014) Uninterruptible Power Systems

1.2 DEFINITIONS

Unless otherwise specified or indicated, electrical and electronics terms used in these specifications, and on the drawings, shall be as defined in IEEE 100.

1.3 SUBMITTALS

Government approval is required for submittals with a "G" designation; submittals not having a "G" designation are for Contractor Quality Control approval. Submit the following in accordance with Section 01 33 00 SUBMITTAL PROCEDURES:

SD-02 Shop Drawings

UPS Drawings

UPS Installation

SD-03 Product Data

UPS Module

Submittal shall include manufacturer's information for each component, device, and accessory provided with the transformer.

Factory Testing

UPS System

UPS Spare Parts

SD-06 Test Reports

Work Plan

Factory Test Plan

Performance Test Plan

Factory Tests

Performance Tests Report

Factory Tests Report

SD-09 Manufacturer's Field Reports

Initial Inspection and Tests

Performance Tests

SD-10 Operation and Maintenance Data

UPS Operation and Maintenance, Data Package 5

Submit operation and maintenance data in accordance with Section 01 78 23 OPERATION AND MAINTENANCE DATA and as specified herein.

SD-11 Closeout Submittals

Installation

1.4 PERFORMANCE REQUIREMENTS

1.4.1 Normal Operation

The UPS module rectifier/charger shall convert the incoming ac input power to dc power for the inverter and for float charging the battery. The inverter shall supply ac power to the critical load continuously. Inverter output shall be synchronized with the bypass ac power source, provided that the bypass ac power source is within the specified voltage and frequency range.

1.4.2 Emergency Operation (Loss or deviation of AC Input Power)

Whenever the ac input power source deviates from the specified tolerances or fails completely, the inverter shall draw its power from the battery system and shall supply AC power to the critical load without any interruption or switching. The battery shall continue to supply power to the inverter for the specified protection time or until return of ac input source. At the same time, an alarm shall sound to alert operating personnel and a trouble signal shall be sent over the communication network, allowing startup of a secondary power source or orderly shutdown of the critical load.

1.4.3 Return of AC Input Power Source

When stable ac input power source returns the rectifier/charger shall

resume operation and shall simultaneously supply the inverter with dc power and recharge the battery. This shall be an automatic function and shall cause no disturbance to the critical load.

1.4.4 Failure of AC Input Power to Return

Should the ac input power fail to return before the battery voltage reaches the discharge limit, the UPS system shall disconnect from the critical load to safeguard the battery.

1.4.5 Transfer to Bypass AC Power Source

When the UPS controller senses an overload or degradation of the inverter output, the bypass switch shall automatically transfer the critical load from the inverter output to the bypass ac power source without an interruption of power. If the bypass ac power source is outside of specified tolerance limits, the UPS and the critical load shall shut down.

1.4.6 Retransfer to Inverter

The static bypass switch shall be capable of automatically retransferring the load back to the inverter output after the inverter output has returned to normal conditions. Retransfer shall only occur if the two sources are synchronized.

1.4.7 UPS Bypass Maintenance

Manual closure of the maintenance bypass switch shall transfer the critical load from the inverter output to the bypass ac power source without disturbing the critical load bus. UPS module shall be capable of manual return to normal operation after completion of maintenance.

1.4.8 Battery Maintenance

The battery protective device shall provide the means of disconnecting the battery from the rectifier/charger and inverter for maintenance. The UPS module shall continue to function and meet the performance criteria specified except for the battery back-up time function.

1.5 QUALITY ASSURANCE

The manufacturer shall have a documented quality assurance program including:

a. Inspections of incoming parts, modular assemblies and final product.

b. Final test procedure for the product including proof of performance specifications.

c. On-site test procedure shall include an inspection of controls and indicators after installation of the equipment.

d. ISO 9001 quality certification.

1.5.1 UPS Drawings

Detail drawings consisting of a complete list of equipment and materials, manufacturer's descriptive and technical literature, battery sizing calculations per IEEE 485, installation instructions, single-line

diagrams, ladder-type schematic diagrams, elevations, layout drawings, and details required to demonstrate that the system has been coordinated and will function properly as a unit.

1.5.2 UPS Installation

Include wiring diagrams and installation details of equipment indicating proposed location, layout and arrangement, control panels, accessories, piping, ductwork, and other items that must be shown to ensure a coordinated installation. Wiring diagrams shall identify circuit terminals and indicate the internal wiring for each item of equipment and the interconnection between each item of equipment. Drawings shall indicate adequate clearance for operation, maintenance, and replacement of operating equipment devices. Submittals shall include the nameplate data, size, and capacity. Submittals shall also include applicable federal, military, industry, and technical society publication references.

1.5.3 Work Plan

Submit 6 copies of schedules of dates for factory tests, installation, field tests, and operator training for the UPS system. Furnish a list of instrumentation equipment for factory and field test reports.

1.5.4 Factory Test Plan

Submit 6 copies of factory test plans and procedures at least 21 calendar days prior to the tests being conducted. Provide detailed description of test procedures, including test equipment and setups, to be used to ensure the UPS meets the performance specification and explain the test methods to be used. As a minimum, the test procedures shall include the test required under the paragraph entitled "Factory Testing."

1.5.5 Performance Test Plan

Submit 6 copies of test plans and procedures at least 15 calendar days prior to the start of field tests. Provide detailed description and dates and times scheduled for performance of tests, and detailed description of test procedures, including test equipment (list make and model and provide functional description of the test instruments and accessories) and setups of the tests to be conducted to ensure the UPS meets the performance specification. Explain the test methods to be used. As a minimum, the test procedures shall include the tests required under the paragraph entitled "Performance Tests."

1.5.6 Factory Tests Report

Submit 6 copies of factory test report within 45 calendar days after completion of tests. Receive approval of test prior to shipping unit. Factory test reports shall be signed by an official authorized to certify on behalf of the UPS manufacturer of that the system meets specified requirements in accordance with the requirements set forth in paragraph entitled "Factory Testing". Test reports in shall be in booklet form tabulating factory tests and measurements performed, upon completion and testing of the installed system. Reports shall state the Contractor's name and address, the name of the project and location, and list the specific requirements which are being certified.

1.5.7 Performance Tests Report

Submit report of test results as specified by paragraph entitled "Performance Tests" within 15 calendar days after completion of tests. Field test reports shall be signed by an official authorized to certify on behalf of the UPS manufacturer that the system meets specified requirements in accordance with the requirements set forth in paragraph entitled "Performance Tests". Test reports in shall be in booklet form tabulating factory tests and measurements performed, upon completion and testing of the installed system. Reports shall state the Contractor's name and address, the name of the project and location, and list the specific requirements which are being certified.

1.5.8 Regulatory Requirements

In each of the publications referred to herein, consider the advisory provisions to be mandatory, as though the word, "shall" had been substituted for "should" wherever it appears. Interpret references in these publications to the "authority having jurisdiction," or words of similar meaning, to mean the Contracting Officer. Equipment, materials, installation, and workmanship shall be in accordance with the mandatory and advisory provisions of NFPA 70 unless more stringent requirements are specified or indicated.

1.5.8.1 Reference Standard Compliance

Where equipment or materials are specified to conform to industry and technical society reference standards of the organizations such as American National Standards Institute (ANSI), American Society for Testing and Materials (ASTM), National Electrical Manufacturers Association (NEMA), Underwriters Laboratories (UL), and Association of Edison Illuminating Companies (AEIC), submit proof of such compliance. The label or listing by the specified organization will be acceptable evidence of compliance.

1.5.8.2 Independent Testing Organization Certificate

In lieu of the label or listing, submit a certificate from an independent testing organization, competent to perform testing, and approved by the Contracting Officer. The certificate shall state that the item has been tested in accordance with the specified organization's test methods and that the item complies with the specified organization's reference standard.

1.5.9 Standard Products

Provide materials and equipment that are products of manufacturers regularly engaged in the production of such products which are of equal material, design and workmanship. Products shall have been in satisfactory commercial or industrial use for 2 years prior to bid opening. The 2-year period shall include applications of equipment and materials under similar circumstances and of similar size. The product shall have been on sale on the commercial market through advertisements, manufacturers' catalogs, or brochures during the 2-year period. Where two or more items of the same class of equipment are required, these items shall be products of a single manufacturer; however, the component parts of the item need not be the products of the same manufacturer unless stated in this section. Equipment shall be supported by a service organization that is, in the opinion of the Contracting Officer,

reasonably convenient to the site.

1.5.9.1 Alternative Qualifications

Products having less than a 2-year field service record will be acceptable if a certified record of satisfactory field operation for not less than 6000 hours, exclusive of the manufacturers' factory or laboratory tests, is furnished.

1.5.9.2 Material and Equipment Manufacturing Date

Products manufactured more than 2 years prior to date of delivery to site shall not be used, unless specified otherwise.

1.6 DELIVERY AND STORAGE

Equipment placed in storage shall be protected from humidity and temperature variations, moisture, water intrusion, dirt, dust, or other contaminants. In harsh environments where temperatures exceed non-operational parameters established within this specification, the equipment storage facility shall be environmentally controlled to ensure temperature parameters are within equipment specification. Documentation of same shall be provided to the Government when storage is implemented.

1.7 PROJECT/SITE CONDITIONS

1.7.1 Environmental Conditions

The UPS and battery system shall be capable of withstanding any combination of the following external environmental conditions without mechanical or electrical damage or degradation of operating characteristics.

a. Operating altitude: Sea level to 3,300 ft. (Systems applied at higher altitudes shall be derated in accordance with the manufacturer's instructions).

b. Non-operating altitude: Sea level to 36,000 ft.

c. Operating ambient temperature range: 32 to 104 degrees F. Range for batteries is 50 to 86 degrees F.

d. Non-operating and storage ambient temperature range: Minus 4 to plus 122 degrees F.

e. Operating relative humidity: 0 to 95 percent, without condensation.

1.7.2 Sound Pressure Levels

Sound pressure levels produced by the UPS, when operating under full rated load, at a distance of 5 feet in any direction from the perimeter of the unit, shall not exceed 75 dB as measured on the A scale of a Type 1 sound level meter at slow response conforming to ASA S1.4.

1.7.3 Verification of Dimensions

The Contractor shall become familiar with details of the work, verify dimensions in the field, and shall advise the Contracting Officer of any discrepancy before performing the work.

1.8 SPECIAL TOOLS

Provide one set of special tools, calibration devices, and instruments required for operation, calibration, and maintenance of the equipment.

1.9 OPERATION AND MAINTENANCE MANUALS

1.9.1 Additions to UPS Operation and Maintenance Manuals

In addition to requirements of Data Package 5, include the followings on the actual UPS system provided:

a. An outline drawing, front, top, and side views.

b. Prices for spare parts and supply list.

c. Routine and field acceptance test reports.

d. Date of Purchase.

e. Corrective maintenance procedures.

f. Test measurement levels with specific test points.

1.9.2 Spare Parts

Furnish the following spare parts, of the same material and workmanship, meeting the same requirements, and interchangeable with the corresponding original parts.

a. Fuses: Two of each type and rating.

b. Circuit boards: One circuit board for each critical circuit.

c. Air Filters: One set of filters.

1.10 WARRANTY

The equipment items shall be supported by service organizations which are reasonably convenient to the equipment installation in order to render satisfactory service to the equipment on a regular and emergency basis during the warranty period of the contract.

PART 2 PRODUCTS

2.1 UPS SYSTEM DESCRIPTION

The UPS system shall conform to UL 1778 and shall consist of UPS module, battery system, battery protective device, static bypass transfer switch, controls and monitoring. Input ac power shall be connected to the normal source ac input of the UPS module. The battery shall be connected to the dc input of the UPS module through the battery protective device. The ac output of the UPS system shall be connected to the critical loads.

2.1.1 Semiconductor Fusing

Power semiconductors shall be fused with fast-acting fuses to prevent cascaded or sequential semiconductor failures. Indicator lamp or display

panel denoting blown fuse conditions shall be readily observable by the operator without removing panels or opening cabinet doors.

2.1.2 Control Power

Provide dual control power supplies. Control power shall be derived from two sources, input and output, with automatic selective control. The control power circuit shall have suitable protection, appropriately marked and located in the immediate vicinity of the input protective device.

2.1.3 EMI/RFI Protection

The components and the system shall be designed to minimize the emission of electromagnetic waves that may cause interference with other equipment.

2.1.4 Internal Wiring

Wiring practices, materials, and coding shall be in accordance with the requirements of NFPA 70, OSHA, and other applicable standards. Wire runs shall be protected in a manner which separates power and control wiring. Control wiring shall be minimum No. 16 AWG extra-flexible stranded copper. Logic-circuit wiring may be smaller. Ribbon cables shall be minimum No. 22 AWG. Control wiring shall have permanently attached wire numbers.

2.1.5 Internal Assembly

The printed circuit board (PCB) subassemblies shall be mounted in pull-out and/or swing-out trays where feasible. Cable connections to the trays shall be sufficiently long to allow easy access to all components. Where not feasible to mount PCB subassemblies in pull-out or swing-out trays, they shall be firmly mounted inside the enclosure. Every PCB subassembly shall be monitored. Self-test and diagnostic circuitry shall be included in the logic circuits such that a fault can be isolated down to the PCB subassembly level.

2.1.6 Cabinets

UPS system shall be installed in cabinets of heavy-duty structure meeting the NEMA PE 1 standards for floor mounting. UPS module cabinet shall be structurally adequate for forklift handling or lifting. Removable lifting eyes shall be provided on top of each cabinet. UPS module cabinet shall have hinged and lockable doors on the front only, with assemblies and components accessible from the front. Doors shall be lockable. Operating controls shall be located outside the locked doors. Input, output, and battery cables shall be installed through the top or bottom of the cabinet.

2.1.6.1 Cabinet Finish

Equipment cabinet shall be cleaned, primed and painted in the manufacturer's standard colors, in accordance with accepted industry standards. Cabinets shall be labeled in accordance with NFPA 70 for arc flash hazard with warning sign reading: "Warning-Potential Arc Flash Hazard. Appropriate PPE and Tools Required when working on this equipment" or similar wording.

2.1.6.2 Live Parts (300 Volts and Above)

Live parts (300 volts and above) that are exposed when front access doors are open shall be adequately protected or covered to minimize the chance

of accidental contact.

2.1.6.3 Drawout Assemblies

Drawout assemblies weighing 50 lbsor more shall be provided with a means of lifting, either an overhead device or a hoisting device.

2.1.7 Safety

UPS shall be equipped with instruction plates including warnings and cautions, suitably located, and describing any special or important procedures to be followed in operating and servicing the equipment. The control panel display shall also provide warning messages prior to performing a critical function.

2.1.8 UPS System Load Profile

The UPS system shall be compatible with the load characteristics defined in the LOAD PROFILE below and load configuration. Compensation for UPS/load interaction problems resulting from nonlinear loads or transformer and motor inrush shall be provided.

LOAD PROFILE

Type of load: data processing equipment.

Size of load: 60kVAkW, horsepower, 208voltage, 225amperage.

Switching pattern: .

Transient characteristics: inrush current magnitude of 100% times steady state rms current for duration of 1 cycle; range of power factor variation of 0.9 to 0.95 lagging; voltage dip of 5% percent.

Steady-state characteristics: 0.9 lagging power factor.

Special factors: harmonic characteristics - Total Harmonic Distortion _30____ percent.

2.2 UPS SYSTEM RATINGS

Unless stated otherwise, the parameters listed are under full output load at 0.9 power factor, with batteries fully charged and floating on the dc bus and with nominal input voltage.

2.2.1 System Capacity

60 kVA, 54 kW.

2.2.2 Battery Capacity

Discharge time to end voltage: 15 minutes, at 77 degrees F. End voltage at full discharge shall be 1.67 volts per cell. Battery shall be capable of delivering 150 percent of full rated UPS load at initial start-up.

2.2.3 Static Switch

225 amperes symmetrical interrupting capacity.

2.2.4 Module Bus Bracing

Braced for 225 amperes symmetrical interrupting capacity.

2.2.5 AC Input

a. Voltage 480 volts line-to-line.

b. Number of phases: 3-phase, 3 4-wire, plus ground.

c. Voltage Range: Plus 10 percent, minus 20 percent, without affecting battery float voltage or output voltage.

d. Frequency: 60 Hz, plus or minus 5 percent.

e. Power walk-in: 20 percent to 100 percent over 10 to 20 seconds.

f. Total harmonic current distortion (THD) reflected into the primary line: 5 percent maximum.

g. Transformer sub-cycle inrush: 4 to 8 times full load rating.

h. Input surge protection: per IEEE C62.41.1 and IEEE C62.41.2.

i. Input power factor: Lagging from 1-100 percent load.

2.2.6 AC Output

a. Voltage 208 volts line-to-line, 120 volts line-to-neutral.

b. Number of phases: 3-phase, 4-wire, plus ground.

c. Voltage regulation:

(1) Balanced load: Plus or minus 1.0 percent.

(2) 50 percent load imbalance, phase-to-phase: Plus or minus 2 percent.

(3) No-load voltage modulation: Plus or minus 1 percent.

(4) Voltage drift: Plus or minus 1 percent over any 30 day interval (or length of test) at stated ambient conditions.

d. Voltage adjustment: Plus or minus 5 percent manually.

e. Frequency: 60 Hz.

f. Frequency regulation: Plus or minus 0.1 percent.

g. Frequency drift: Plus or minus 0.1 percent over any 24 hour interval (or length of test) at stated ambient conditions when on internal oscillator.

h. Harmonic content (RMS voltage): Voltage THD shall be a maximum of 2 percent with 100 percent linear load and 5 percent with 100 percent nonlinear load and a crest factor of less than 3 to 1.

i. Load power factor operating range: 1.0 to 0.8 lagging.

j. Phase displacement:

(1) Balanced load: Plus or minus 1 degree of bypass input.

(2) 50 percent load imbalance phase-to-phase: Plus or minus 3 degrees of bypass input.

k. Wave-form deviation factor: 5 percent at no load.

l. Overload capability (at full voltage) (excluding battery):

(1) 125 percent load for 10 minutes.

(2) 150 percent load for 60 seconds.

(3) 300 percent load for one cycle after which it shall be current limited to 150 percent until fault is cleared or UPS goes to bypass.

2.2.7 Transient Response

2.2.7.1 Voltage Transients

a. 100 percent load step: Plus or minus 5 percent.

b. Loss or return of ac input: Plus or minus 1 percent.

c. Automatic transfer of load from UPS to bypass: Plus or minus 4 percent.

d. Manual retransfer of load from bypass to UPS: Plus or minus 4 percent.

e. Response time: Recovery to 99 percent steady-state condition within 20 milliseconds after any of the above transients.

2.2.7.2 Frequency

a. Transients: Plus or minus 0.6 Hz maximum.

b. Slew Rate: 1.0 Hz maximum per second.

2.2.8 Efficiency

Minimum Efficiency: 90 percent at full load kW and 90 percent at 50 percent load.

2.3 UPS MODULE

2.3.1 General Description

UPS module shall consist of a rectifier/charger unit and a 3-phase inverter unit with their associated transformers, synchronizing equipment, protective devices, surge suppression, input isolation transformer, and accessories as required for operation.

2.3.1.1 Interchangeability

The subassemblies in one UPS module shall be interchangeable with the

corresponding modules within the same UPS, and from one UPS system to another of identical systems.

2.3.2 Rectifier/Charger Unit

Rectifier/charger unit shall be solid state and shall provide regulated direct current to the dc bus, supplying power to the inverter and charging the battery plant.

2.3.2.1 Input Protective Device

Rectifier/charger unit shall be provided with an input protective device. The protective device shall be sized to accept simultaneously the full-rated load and the battery recharge current. The protective device shall be capable of shunt tripping and shall have 250 amperes symmetrical interrupting rating. The protective device shall have provision for locking in the "off" position.

2.3.2.2 Surge Protection

A surge suppression device shall be installed at the UPS input to protect against lightning and switching surges. Internal components shall be protected from surges that enter at each ac input connection including main input, static bypass transfer switch, and maintenance bypass/isolation switch. Surge suppressors shall protect internal components according to IEEE C62.41.1 and IEEE C62.41.2, Category B. Surge suppressors shall be UL 1449 approved to fail in "safe" mode.

2.3.2.3 Input Isolation Transformer

A dry-type, isolated-winding power transformer shall be used for the rectifier unit. The transformer's hottest spot winding temperature shall not exceed the temperature limit of the transformer insulation material when operating at full load. The transformer insulation shall be Class H, 150 degrees C rise. Transformer connections shall be accessible from the front. Transformer cabinet, if required, shall match the UPS cabinet and attach to it.

2.3.2.4 Power Walk-In

Rectifier/charger unit shall be protected by a power walk-in feature such that when ac power is returned to the ac input bus, the total initial power requirement will not exceed 20 percent of the rated full load current. This demand shall increase gradually to 100 percent of the rated full load current plus the battery charging current over the specified time interval.

2.3.2.5 Sizing

Rectifier/charger unit shall be sized for the following two simultaneous operating conditions:

a. Supplying the full rated load current to the inverter.

b. Recharging a fully-discharged battery to 95 percent of rated ampere-hour capacity within ten times the discharge time after normal ac power is restored.

2.3.2.6 Battery Charging Current

a. Primary current limiting: Battery-charging current shall be voltage regulated and current limited. The battery-charging current limit shall be separately adjustable from 2 percent to 25 percent of the maximum discharge current. After the battery is recharged, the rectifier/charger unit shall maintain the battery at full float charge until the next operation under input power failure. Battery charger shall be capable of providing equalizing charge to the battery.

2.3.2.7 DC Ripple

Rectifier/charger unit shall minimize ripple current and voltage supplied to the battery; the ripple current into the battery shall not exceed 3 percent RMS of the inverter input rated current; the ripple voltage into the battery shall not exceed 2 percent RMS of the float voltage.

2.3.2.8 DC Voltage Adjustment

Rectifier/charger unit shall have manual means for adjusting dc voltage for battery equalization, to provide voltage within plus 10 percent of nominal float voltage.

2.3.2.9 Battery Isolation Protective Device

Module shall have a dc protective device to isolate the module from the battery system. The protective device size and interrupting rating shall be as required by system capacity and shall incorporate a shunt trip as required by circuit design. The protective device shall have provision for locking in the "off" position.

2.3.3 Inverter Unit

Inverter unit shall be a solid-state device deriving its power from the dc bus (rectifier or battery source) and providing ac power within specified limits to the critical load. Inverter shall utilize microprocessor controlled solid state Pulse Width Modulation (PWM) controlled IGBT power transistor technology to shape the ac output.

2.3.3.1 Output Overload

The inverter shall be able to sustain an overload as specified across its output terminals. The inverter shall not shut off, but shall continue to operate within rated parameters, with inverse-time overload shutdown protection. If the overload condition persists beyond the rated parameters of the inverter, the inverter shall current limit, load shall be transferred to the bypass source, and the inverter shall disconnect automatically from the critical load bus.

If the bypass source is not available and the overload/fault condition continues, the inverter shall current limit for a limited time as determined by the manufacturer and shall shut down to protect the internal components.

2.3.3.2 Output Frequency Control

The inverter shall normally operate in phase-lock and synchronism with the bypass source. When the bypass source frequency deviates by more than ±0.5 Hz, the internal frequency oscillator shall automatically take control and

become the new frequency reference. Upon restoration of the bypass source within the required tolerance, the inverter shall synchronize back with that source at a slew rate not exceeding the specified rate. The oscillator shall be temperature compensated and shall be manually adjustable.

2.3.3.3 Output Protective Device

The output protective device shall be capable of shunt tripping or opening on an applied control signal and shall have the proper frame size and trip rating to supply overload current as specified. External output protective device shall have provision for locking in the "off" position. The inverter output protective device shall work in conjunction with the bypass protective device for both manual and automatic load transfers to and from bypass power.

2.3.3.4 Output Transformer

The inverter output transformer shall be similar to the input transformer and shall be capable of handling up to K-13 nonlinear loads as described in IEEE C57.110.

2.3.4 External Protection

UPS module shall have built-in self-protection against undervoltage, overvoltage, overcurrent and surges introduced on the ac input source and/or the bypass source. The UPS shall also have built-in self-protection against overvoltage and voltage surges introduced at the output terminals by paralleled sources, load switching, or circuit breaker operation in the critical load distribution system.

2.3.5 Internal Protection

UPS module shall be self-protected against overcurrent, sudden changes in output load and short circuits at the output terminals. UPS module shall be provided with output reverse power detection which shall cause the module to be disconnected from the critical load bus when output reverse power is present. UPS module shall have built-in protection against permanent damage to itself and the connected load for predictable types of failure within itself and the connected load. At the end of battery discharge limit, the module shall shut down without damage to internal components.

2.4 STATIC BYPASS TRANSFER CIRCUIT

A static bypass transfer circuit shall be provided as an integral part of the UPS and shall consist of a static switch, made up of two reverse-paralleled SCRs (silicon-controlled rectifiers) per phase conductor, and a bypass protective device or bypass switch, made up of a contactor or motor operated circuit breaker. The bypass protective device shall be in parallel with the static switch. The inverter output protective device shall disconnect and isolate the inverter from the bypass transfer circuit.

The control logic shall contain an automatic transfer circuit that senses the status of the inverter logic signals and alarm conditions and provides an uninterrupted transfer of the load to the bypass ac power source, without exceeding the transient limits specified herein, when a malfunction occurs in the UPS or when an external overload condition

occurs. The power section of the static bypass transfer circuit shall be provided as a plug-in type assembly to facilitate maintenance. The static bypass transfer circuit shall be used to connect the input bypass ac power source to the critical load when required, and shall have the following features:

2.4.1 Uninterrupted Transfer

The static bypass transfer switch shall automatically cause the bypass ac power source to assume the critical load without interruption when the bypass control logic senses one of the following conditions and the UPS inverter output is synchronized to the bypass ac power source:

a. Inverter overload exceeds unit's rating.

b. Battery protection period is expired and bypass is available.

c. System failure.

d. Inverter output undervoltage or overvoltage.

2.4.2 Interrupted Transfer

If an overload occurs and the UPS inverter output is not synchronized to the bypass ac power source, the UPS inverter output shall current-limit for 200 milliseconds minimum. The inverter shall then turn off and an interrupted transfer to the bypass ac power source shall be made.

If the bypass ac power source is beyond the conditions stated below, an interrupted transfer shall be made upon detection of a fault condition:

a. Bypass voltage greater than plus or minus 10 percent from the UPS rated output voltage.

b. Bypass frequency greater than plus or minus 0.5 Hz from the UPS rated output frequency.

c. Phase differential of ac bypass voltage to UPS output voltage greater than plus or minus 3 degrees.

2.4.3 Manual Transfer

It shall be possible to make a manually-initiated static transfer from the system status and control panel. The transfer shall be make-before-break utilizing the bypass switch.

2.4.4 Automatic Uninterrupted Forward Transfer

The static bypass transfer switch shall automatically forward transfer, without interruption after the UPS inverter is turned "on", or after an instantaneous overload-induced reverse transfer has occurred and the load current has returned to less than the unit's 100 percent rating.

2.4.5 Forced Transfer

The control logic circuitry shall provide the means of making a forced or reverse transfer of the static bypass transfer circuit on an interrupted basis. Minimum interruption shall be 200 milliseconds when the UPS inverter is not synchronized to the bypass ac power source.

2.4.6 Overload Ratings

The static bypass transfer switch shall withstand the following overload conditions:

a. 1000 percent of UPS output rating for one cycle.

b. 150 percent of UPS output rating for one minute.

c. 125 percent of UPS output rating for 10 minutes.

2.4.7 Static Switch Disconnect

A static switch disconnect shall be incorporated to isolate the static bypass transfer switch assembly so it can be removed for servicing. The switch shall be equipped with auxiliary contacts.

2.5 MAINTENANCE BYPASS SWITCH

2.5.1 General

A maintenance bypass switch shall be provided in a free-standing floor-mounted enclosure. The maintenance bypass switch shall provide the capability to continuously support the critical load from the bypass AC power source while the UPS is isolated for maintenance. The maintenance bypass switch shall be housed in a separate cabinet or enclosure in such a way that service personnel will not be exposed to electrically live parts while maintaining the equipment. Switch shall contain a maintenance bypass protective device and a module isolation protective device.

2.5.2 Load Transfer

The maintenance bypass switch shall provide the capability of transferring the critical load from the UPS static bypass transfer switch to maintenance bypass and then back to the UPS static bypass transfer switch with no interruption to the critical load.

2.5.3 Load Bank Protection Device

A load bank protective device shall be provided to allow the UPS system to be tested using a portable load bank. The load bank protective device shall be connected on the line side of the maintenance bypass switch isolation protective device.

2.5.4 Isolation Transformer

The maintenance bypass cabinet shall contain an isolation transformer as required to match the output voltage requirements.

2.6 MODULE CONTROL PANEL

The UPS module shall be provided with a control/indicator display panel. The display panel shall be on the front of the UPS module. Controls, meters, alarms and indicators for operation of the UPS module shall be on this panel. The display panel shall be menu driven for browsing all the screens.

2.6.1 Module Meters

2.6.1.1 Monitored Functions

The following functions shall be monitored and displayed:

a. Input voltage, phase-to-phase (all three phases).

b. Input current, all three phases.

c. Input frequency.

d. Battery voltage.

e. Battery current (charge/discharge).

f. Output voltage, phase-to-phase and phase-to-neutral (all three phases).

g. Output current, all three phases.

h. Output frequency.

i. Output kilowatts.

j. Elapsed time meter to indicate hours of operation, 6 digits.

k. Bypass voltage, phase-to-phase and phase-to-neutral (all three phases).

l. Output kilovars.

m. Output kilowatt hours, with 15-minute demand attachment.

n. Battery temperature.

o. Output Percentage load.

p. Remaining battery time.

2.6.1.2 Meter Construction

The display panel shall display alphanumeric parameters based on true RMS metering with 1 percent accuracy (minimum 4 significant digits).

2.6.2 Module Controls

Module shall have the following controls:

a. Lamp test/reset pushbutton.

b. Alarm test/reset pushbutton.

c. Module input protective device trip pushbutton, with guard.

d. Module output protective device trip pushbutton, with guard.

e. Battery protective device trip pushbutton, with guard.

f. Emergency off pushbutton, with guard.

g. DC voltage adjustment potentiometer, with locking guard.

h. Control power off switch.

i. UPS/bypass transfer selector switch.

j. Static bypass transfer switch enable/disable selector switch.

2.6.3 Module Alarm Indicators

Module shall have indicators for the following alarm items. Any one of these conditions shall turn on an audible alarm and the appropriate summary indicator. Each new alarm shall register without affecting any previous alarm.

a. Input ac power source failure.

b. Input protective device open.

c. Input power out of tolerance.

d. Overload.

e. Overload shutdown.

f. DC overvoltage/shutdown.

g. DC ground fault.

h. Low battery.

i. Battery discharged.

j. Battery protective device open.

k. Blower fan failure.

l. Input transformer overtemperature.

m. Low battery shutdown.

n. UPS on battery.

o. Equipment overtemperature.

p. Fuse blown (with indication where).

q. Control power failure.

r. Charger off/problem.

s. Inverter fault/off.

t. Emergency power off.

u. External shutdown (remote EPO activated).

v. Critical load on static bypass.

w. Static bypass transfer switch disabled/failure.

x. Inverter output overvoltage.

y. Inverter output undervoltage.

z. Inverter output overfrequency.

aa. Inverter output underfrequency.

bb. Bypass source voltage outside limits.

cc. Bypass frequency out of range.

dd. Bypass source to inverter out of synchronization.

ee. Overtemperature shutdown.

ff. Hardware shutdown.

2.6.4 Module Emergency OFF Button

Pressing the emergency off button shall cause the module to be disconnected from the system, via its input protective device, output protective device, and battery protective device. The button shall include a protective cover to prevent unintentional activation.

2.7 SELF-DIAGNOSTIC CIRCUITS

The control logic shall include status indicators for trouble-shooting the control circuits. These indicators shall be mounted on the circuit card edge or face such that they will be visible without repositioning the card, and shall be labeled with the function name.

2.8 COMMUNICATIONS AND DATA ACQUISITION

An RS 232 communications and data acquisition port shall be provided. This port shall allow the system parameters, status, alarm indication and control panel functions specified to be remotely monitored and controlled.

Additionally, a second communication port shall be provided for use with the following:

a. A set of eight Form C remote alarm contacts rated at 120V, 0.5A, shall be provided for remote alarm monitoring.

b. Auto-dial modem communication shall be provided to communicate with a remote modem in case an alarm function is active.

c. A SNMP (Simple Network Management Protocol) adapter shall be provided to communicate UPS monitoring via a network or direct connection to a PC.

d. A standard Web Browser adapter shall be provided to remotely view and monitor UPS functions over the Internet.

All the communication ports and contacts shall be capable of simultaneous communication.

2.8.1 Emergency Control Contacts

Provide normally open contacts to signal when power is supplied to the UPS from emergency engine generators or alternate source.

2.9 TEMPERATURE CONTROL

2.9.1 General

Cabinet and enclosure ventilation shall be adequate to ensure that components are operated within their ratings. Forced-air cooled rectifier, inverter, and control unit will be acceptable. The cooling fans shall continue operation if UPS input power is lost. Redundancy shall be provided so that failure of one fan or associated circuit breaker will not cause an overheat condition. Cooling air shall enter the lower front of the cabinets and exhaust at the top. Blower power failure shall be indicated as a visual and audible alarm on the control panel. Air inlets shall have replaceable filters that may be located on the inside of the cabinet doors and shall be easily accessible for replacement.

2.9.2 Blower Power Source

Blower power source shall be internally derived from the output side of UPS module, with automatic transfer arrangement.

2.9.3 Temperature Sensors

Temperature sensors shall be provided to monitor the air temperature. Separate sensors shall monitor the temperature of rectifier and inverter heat sinks. Separate sensors shall also monitor the transformer temperature. Critical equipment over-temperature indication shall start a timer that shall shut down the UPS system if the temperature does not return below the setpoint level recommended by the UPS manufacturer.

2.10 BATTERY SYSTEM

2.10.1 General

Battery system shall contain the battery cells, racks, battery disconnect, battery monitor and cabinet, if required. A storage battery with sufficient ampere-hour rating to maintain UPS output at full capacity for the specified duration shall be provided for each UPS module. The battery shall be of heavy-duty, industrial design suitable for UPS service. The cells shall be provided with flame arrestor vents, intercell connectors and cables, cell-lifting straps, cell-numbering sets, and terminal grease. Intercell connectors shall be sized to maintain terminal voltage within voltage window limits when supplying full load under power failure conditions. Cell and connector hardware shall be stainless steel of a type capable of resisting corrosion from the electrolyte used.

2.10.2 Battery Ratings

a. Type: lead calcium.

b. Specific gravity when fully charged: 1.215.

c. End voltage 1.67 volts per cell.

d. Float voltage: 2.17 to 2.26 volts per cell.

e. Equalizing voltage: 2.33 to 2.38 volts per cell.

2.10.3 Battery Construction

The battery shall be of the valve-regulated, sealed, non-gassing, recombinant type.

2.10.4 Battery Cabinet

The battery pack assembly shall be furnished in a battery cabinet matching the UPS cabinet. The battery cabinet shall be designed to allow for checking the torque on the connections in the battery system and to provide adequate access for annual housekeeping chores. External wiring interface shall be through the bottom or top of the assembly. A smoke and high temperature alarm shall annunciate detection of either smoke or high temperature within the battery cabinet.

2.10.5 Cell-Terminal Covers

Acid-resistant transparent cell-terminal covers not exceeding 6 feet in length and with vent holes drilled on top where needed shall be provided.

2.10.6 Battery Disconnect

Each battery pack assembly shall have a fused disconnect switch provided in a NEMA 1 enclosure, finished with acid-resistant paint and located in line with the assembly. Switch shall be complete with line side and load side bus bars for connection to battery cells. Switch shall be rated 208 V dc, 225 amperes, 3-pole with interrupting rating as required by system capacity, and shall have an external operator that is lockable in the "off" position.

2.10.7 Battery Monitor

A battery monitor shall be provided for each battery pack assembly. At a minimum, this device shall monitor the following parameters:

a. Total system voltage.

b. Ambient room temperature.

c. Total battery discharge cycles with a duration of 30 seconds or less.

The monitor shall also record the total accumulated discharge minutes and accumulated battery system discharge kW hours.

2.11 FACTORY TESTING

The UPS system shall be factory tested to meet the requirements specified using a test battery (not the battery to be supplied with the system). UPS module shall be factory load tested as an independent assembly with 3-phase ac input power and with battery power for a minimum of 8 hours, with meter readings taken every 30 minutes. Load shall be balanced at rated kVA and rated power factor. Factory tests for the UPS module shall be run under full load, and will be witnessed by the Government. Should a malfunction occur, the problem shall be corrected and the test shall be repeated. As a

minimum, the factory tests shall include the parameters described in paragraphs ac Input, ac Output, Transient Response and Efficiency. The tests shall encompass all aspects of operation, such as module failure, static bypass operation, battery failure, input power failure and overload ratings. The Contracting Officer shall be notified in writing at least 2 weeks before testing. Factory-test time shall not be used for system debugging and/or checkout. Such work shall be done prior to notifying the Government that the system is ready for testing. Factory tests shall be performed during normal business hours. The system shall be interconnected and tested for an additional 8 hours to ensure proper wiring and performance.

2.11.1 Transient Tests

Transient tests shall be conducted using high-speed oscillograph type recorders to demonstrate the operation of the components to the satisfaction of the Government. These tests shall include 50 percent to 100 percent load changes, manual transfer, manual retransfer, low dc bus initiated transfer and low ac output bus transfer. A recording instrument equipped with an event marker shall be used.

2.11.2 Efficiency Tests

Testing for efficiency shall be performed at zero output up to 100 percent of stated kVA output in 25 percent steps, 0.8 power factor, with battery fully charged and floating on the dc bus, with nominal input voltage, and with module connected to represent actual operating conditions.

2.12 CABLE LUGS AND TERMINATIONS

2.12.1 Cable Lugs

Provide appropriate compression type lugs on all ac and dc power connections to the UPS system and battery as required. Aluminum or bare copper cable lugs are not suitable.

2.12.2 Terminations

Terminals shall be supplied for making power and control connections. Terminal blocks shall be provided for field wiring terminals. Terminal blocks shall be heavy-duty, strap-screw type. Terminal blocks for field wiring shall be located in one place in each module. Control wiring shall be extended to the terminal block location. No more than two wires shall land on any terminal point. Where control wiring is attached to the same point as power wiring, a separate terminal shall be provided. If bus duct is used, bus stubs shall be provided where bus duct enters cabinets.

2.13 INSPECTION

Inspection before shipment is required. The manufacturer shall notify the Government at least 2 weeks before shipping date so that an inspection can be made.

2.14 FIELD FABRICATED NAMEPLATES

ASTM D709. Provide laminated plastic nameplates for each equipment enclosure, relay, switch, and device; as specified or as indicated on the drawings. Each nameplate inscription shall identify the function and, when applicable, the position. Nameplates shall be melamine plastic,

0.125 inch thick, white with black center core. Surface shall be matte finish. Corners shall be square. Accurately align lettering and engrave into the core. Minimum size of nameplates shall be 1.0 by 2.5 inches. Lettering shall be a minimum of 0.25 inch high normal block style.

2.15 MANUFACTURER'S NAMEPLATES

Each item of equipment shall have a nameplate bearing the manufacturer's name, address, model number, and serial number securely affixed in a conspicuous place; the nameplate of the distributing agent will not be acceptable.

2.16 FACTORY APPLIED FINISH

Electrical equipment shall have factory-applied painting systems which shall, as a minimum, meet the requirements of NEMA 250 corrosion-resistance test.

PART 3 EXECUTION

3.1 INSTALLATION

Electrical installations shall conform to IEEE C2, NFPA 70, and to requirements specified herein. Provide new equipment and materials unless indicated or specified otherwise.

3.1.1 Control Cable

UPS control wiring shall be installed in individual separate rigid steel conduits, unless connections are made between side by side matching cabinets of UPS. Tag control wires with numeric identification tags corresponding to the terminal strip location to where the wires are connected. In addition to manufacturer's requirements, provide four additional spare conductors between UPS module and remote alarm panel in same conduit. When routing control cables inside UPS module, maintain a minimum 6 inches separation from power cables.

3.1.2 Grounding Conductor

Provide an insulated equipment grounding conductor in feeder and branch circuits. Conductor shall be separate from the electrical system neutral conductor. Ground battery racks and battery breaker cabinets with a separate equipment grounding conductor to the UPS cabinet.

3.1.3 UPS Output Conductors

Isolate the UPS output conductors from the UPS cabinet to the critical load panels and from other conductors by installing in separate conduit. Isolation shall prevent inductive coupling from other conductors.

3.1.4 DC Power Conductors

When installed in conduits, place dc power conductors from the UPS cabinet to the battery circuit breaker such that each conduit contains an equal number of positive and negative conductors, for example, two positive and two negative conductors in each conduit.

3.1.5 Seismic Protection

The UPS enclosure shall be designed to resist seismic loading as specified under UFC 3-310-04.

3.1.6 Conduit Entries

Conduit entries shall use the available conduit areas shown on manufacturer's installation drawings. Conduit entries shall not be made through the front, side or rear panels of the UPS or Maintenance Bypass Cabinet.

3.1.7 Battery Cabinet Assembly

Battery cabinets are typically factory assembled for up to 100 KVA UPS systems. Battery cabinets for larger units typically require assembly at the site. Installation of battery cabinets shall conform to the manufacturer's instructions.

3.1.8 Battery Installation

Installation of batteries shall conform to the manufacturer's instructions.

3.2 FIELD QUALITY CONTROL

Contractor shall notify Contracting Officer in writing at least 45 calendar days prior to completion of the UPS system installation. At this time the Contractor, will schedule the UPS manufacturer's technical representative to inspect the completed installation. The UPS technical representative shall provide instruction for activity personnel as specified in paragraph titled "DEMONSTRATION".

3.2.1 Installation Preparation

The following items shall be completely installed by the Contractor and be operational prior to the arrival of the UPS representative for inspection, unit start-up and testing:

a. Ventilation equipment in the UPS and battery rooms.

b. Battery cabinets and cells. This is not applicable for maintenance-free battery.

c. Battery connections including cell-to-cell, tier-to-tier, and rack-to-rack connections, with correct polarity;

d. DC power and control connections between UPS and battery circuit breaker, with correct polarity;

e. DC power connection between battery circuit breaker and battery, with correct polarity;

f. Clockwise phase rotation of ac power connections;

g. AC power to rectifier input bus;

h. AC power to UPS bypass input bus;

i. AC power to UPS maintenance bypass circuit breaker;

j. AC power from UPS output to UPS maintenance bypass output circuit breaker;

k. Remote monitors and control wiring;

l. UPS system and battery system properly grounded;

m. Emergency shower and eye wash;

o. Control connections between UPS module and UPS maintenance bypass cabinet;

p. Clean and vacuum UPS and battery room floors, battery cells, and UPS equipment, both inside and outside.

q. Ensure that shipping members have been removed.

r. Provide IEEE 450 battery installation certification.

3.2.2 Initial Inspection and Tests

The UPS technical representative and the Contracting Officer, in the presence of the Contractor, will inspect the completed installation. The Contractor shall correct construction or installation deficiencies as directed. Perform acceptance checks in accordance with the manufacturer's recommendations and include the following visual and mechanical inspections, performed in accordance with NETA ATS.

a. Visual and mechanical inspection

(1) Compare equipment nameplate data with drawings, specifications and approved shop drawings.

(2) Inspect physical and mechanical condition. Inspect doors, panels, and sections for paint, dents, scratches, fit, and missing hardware. Inspect the displays for scratches, dark pixels or uneven brightness.

(3) Inspect anchorage, alignment, grounding, and required clearances.

(4) Verify that fuse sizes and types correspond to drawings.

(5) Verify the unit is clean inside and out.

(6) Test all electrical and mechanical interlock systems for correct operation and sequencing.

(7) Inspect bolted electrical connections for high resistance using one of the following methods:

(a) Use a low-resistance ohmmeter.

(b) Verify tightness of accessible bolted electrical connections by calibrated torque-wrench method.

(c) Perform thermographic survey.

(8) Verify operation of forced ventilation.

(9) Verify that vents are clear and new clean filters are installed.

3.2.3 Performance Tests

Provide equipment, test instruments, power, load bank, materials and labor required for tests. Contracting Officer will witness all tests and the tests shall be subject to his approval. Perform tests in accordance with the manufacturer's recommendations and include the following electrical tests.

3.2.3.1 UPS Unit Performance Tests

Upon completion of battery activation procedures, Contractor shall connect load bank to UPS output. Load bank required shall be determined by the following:

UPS KVA RATING X 0.8 = KW of LOAD BANK

Performance test is to be run under the supervision of the UPS technical representative. UPS unit shall be operated under full load for a minimum of one hour. Contractor shall be required to operate feeder and bypass power feeder breakers during testing of the UPS.

a. Electrical Tests

(1) Perform resistance measurements through bolted connections with a low-resistance ohmmeter.

(2) Test static transfer from inverter to bypass and back. Use normal load, if possible.

(3) Set free running frequency of oscillator.

(4) Test dc undervoltage trip level on inverter input breaker. Set according to manufacturer's published data.

(5) Test alarm circuits.

(6) Verify synchronizing indicators for static switch and bypass switches.

(7) Perform electrical tests for UPS system breakers.

(8) Perform electrical tests for UPS system batteries.

b. Test Values

(1) Compare bolted connection resistances to values of similar connections.

(2) Verify bolt-torque levels.

(3) Micro-ohm or millivolt drop values shall not exceed the high levels of the normal range as indicated in the manufacturer's published data. If manufacturer's data is not available, investigate any values which deviate from similar connections by more than 50 percent of the lowest value.

c. Load Test

The installed system shall be load tested for a continuous 24 hour period by means of resistive load banks. The system shall be continuously tested at 1/2 load for 8 hours, 3/4 load for 8 hours and full load for 8 hours. Provide resistive load banks of total kW load of equipment to facilitate startup under load conditions, and to conduct load tests described above. Instrument readings shall be recorded every half hour for the following:

(1) Input voltage (all three phases).

(2) Input current (all three phases).

(3) Input frequency.

(4) Battery voltage.

(5) Output voltage (all three phases).

(6) Output current (all three phases).

(7) Output kilowatts.

(8) Output frequency.

d. Full Load Burn In Test

The installed system shall undergo an additional full load burn-in period of 24 continuous hours. If a failure occurs during the burn-in period, the tests shall be repeated. Instrument readings shall be recorded every half hour as above. During the burn-in period, the following tests shall be performed:

(1) With the UPS carrying maximum continuous design load and supplied from the normal source, switch 100 percent load on and off a minimum of five times within the burn-in period .

(3) With the UPS carrying maximum continuous design load and operating on battery power, repeat the switching operations described in step a above.

(4) Continue operation on battery power for 1 minute, then restore normal power.

The Contractor shall furnish a high-speed dual trace oscillograph to monitor ten or more cycles of the above tests at the ON and OFF transitions and two typical steady-state periods, one shortly after the load is
energized (at 30 to 60 seconds) and one after operation has stabilized (at 8 to 10 minutes). Four copies of the traces shall be delivered to the Contracting Officer.

e. Battery Discharge Test

With the battery fully charged, the system shall undergo a complete battery discharge test to full depletion and a recharge to nominal conditions.
Instrument readings shall be recorded every minute during discharge for the following:

(1) Battery voltage.

(2) Battery current.

(3) Output voltage (all three phases).

(4) Output current (all three phases).

(5) Output kilowatts.

(6) Output frequency.

3.2.3.2 Battery Performance Test (Constant KW)

Furnish all labor, material and test equipment necessary to conduct performance test under the direction of UPS technical representative. The following shall be accomplished:

a. Install a calibrated voltmeter across the battery terminals to measure voltage, and install a calibrated voltmeter across the UPS dc shunt to read charging current. UPS technical representative will advise connection to dc shunt.

b. Record temperature of pilot cells in battery immediately prior to start of discharge performance test.

c. Read and record total battery voltage and battery current at start of discharge and every minute during discharge test.

d. Record minutes and seconds when battery voltage drops below minimum discharge voltage of 291 volts dc. On initial discharge test, a battery may be expected to deliver 95 percent of its rated capacity. This will increase to 100 percent after several complete discharge cycles or after 12 months of float charge service.

e. Should battery fail to meet the requirements of the first discharge performance test, open the inverted output breaker. Then put battery on equalizing charge, with rectifier adjusted to normal equalizing voltage of 424 volts dc. Equalize for a minimum of 100 hours. Measure and record time and battery voltage. Run a second discharge performance test.

3.3 DEMONSTRATION

3.3.1 Instructing Government Personnel

Furnish the services of competent instructors to give full instruction to designated Government personnel in the adjustment, operation, and maintenance of the specified systems and equipment, including pertinent safety requirements as required. Instructors shall be thoroughly familiar with all parts of the installation and shall be trained in operating theory as well as practical operation and maintenance work. Instruction shall be given during the first regular work week after the equipment or system has been accepted and turned over to the Government for regular operation. Provide 8 hours of instruction for personnel. When more than 4 man-days of instruction are specified, use approximately half of the time for classroom instruction. Use other time for instruction with equipment or system. When significant changes or modifications in the

equipment or system are made under the terms of the contract, provide additional instructions to acquaint the operating personnel with the changes or modifications.

3.4 FINAL ADJUSTMENTS

a. Remove load bank and reconnect system for normal operation.

b. Equalize battery at 424 volts for a period of 72 hours.

d. Resume charging battery at normal float voltage of 411 volts dc.

e. Check battery connections are properly torqued to manufacturer's specifications. Take and record, for cell-to-cell and terminal connections, detailed micro-ohm resistance readings. Remake connections having a resistance of more than 10 percent above the average.

f. All manufacturer's data and operation manuals, which are an integral part of, and shipped with UPS, shall be delivered to Contracting Officer.

3.5 NAMEPLATE MOUNTING

Provide number, location, and letter designation of nameplates as indicated. Fasten nameplates to the device with a minimum of two sheet-metal screws or two rivets.

3.6 DISPOSAL

Upon completion of UPS installation and testing, Contractor shall remove and dispose of empty, partially full and excess acid drums, including shipping containers, obsolete batteries, and obsolete UPS modules. Removal shall be accomplished off-base and in conformance with local laws and regulations regarding disposal of hazardous material.

-- End of Section --

SECTION 28 31 63.00 20

ANALOG/ADDRESSABLE INTERIOR FIRE ALARM SYSTEM
10/07

PART 1 GENERAL

1.1 REFERENCES

The publications listed below form a part of this specification to the extent referenced. The publications are referred to within the text by the basic designation only.

FM GLOBAL (FM)

FM APP GUIDE	(updated on-line) Approval Guide http://www.approvalguide.com/

NATIONAL FIRE PROTECTION ASSOCIATION (NFPA)

NFPA 241	(2013) Standard for Safeguarding Construction,Alteration, and Demolition Operations
NFPA 72	(2013) National Fire Alarm and Signaling Code
NFPA 90A	(2015) Standard for the Installation of Air Conditioning and Ventilating Systems

UNDERWRITERS LABORATORIES (UL)

UL 1971	(2002; Reprint Oct 2008) Signaling Devices for the Hearing Impaired
UL 268	(2009) Smoke Detectors for Fire Alarm Systems
UL 464	(2009; Reprint Apr 2012) Standard for Audible Signal Appliances
UL Electrical Constructn	(2012) Electrical Construction Equipment Directory
UL Fire Prot Dir	(2012) Fire Protection Equipment Directory

1.2 RELATED REQUIREMENTS

Section 26 00 00.00 20 BASIC ELECTRICAL MATERIALS AND METHODS, applies to this section, with the additions and modifications specified herein.

1.3 DESCRIPTION OF WORK

1.3.1 Scope

This work includes designing and providing modifying the existing analog/addressable fire alarm system as described herein and on the contract drawings for the multiple buildings. The system shall include

wiring, raceways, pull boxes, terminal cabinets, outlet and mounting boxes, control equipment, alarm, and supervisory signal initiating devices, alarm notification appliances, supervising station fire alarm system transmitter, and other accessories and miscellaneous items required for a complete operating modifcation to existing system even though each item is not specifically mentioned or described. Provide system complete and ready for operation. Equipment, materials, installation, workmanship, inspection, and testing shall be in strict accordance with the required and advisory provisions of NFPA 72 except as modified herein. The system layout on the drawings show the intent of coverage and are shown in suggested locations. Final quantity, layout, and coordination is the responsibility of the Contractor.

1.4 SUBMITTALS

Government approval is required for submittals with a "G" designation; submittals not having a "G" designation are for information only. When used, a designation following the "G" designation identifies the office that will review the submittal for the Government. Submit the following in accordance with Section 01 33 00 SUBMITTAL PROCEDURES:

Provide six complete sets of submittals. Partial submittals will not be acceptable and will be returned without review.

SD-02 Shop Drawings

Provide point-to-point wiring diagrams showing the points of connection and terminals used for electrical field connections in the system, including interconnections between the equipment or systems which are supervised or controlled by the system. Diagrams shall show connections from field devices to the FACP and remote fire alarm control units, initiating circuits, switches, relays and terminals.

Provide plan view drawing showing device locations, terminal cabinet locations, junction boxes, other related equipment, conduit routing, wire counts, circuit identification in each conduit, and circuit layouts for all floors.

Provide a complete description of the system operation in matrix format on the drawings.

Provide a complete list of device addresses and corresponding messages.

Provide detailed drawings of the graphic annunciator.

Include annotated catalog data, in table format on the drawings, showing manufacturer's name, model, voltage, and catalog numbers for equipment and components.

Provide complete riser diagrams indicating the wiring sequence of devices and their connections to the control equipment. Include a color code schedule for the wiring. Include floor plans showing the locations of devices and equipment.

Battery power calculations

Submit shop drawings not smaller than 24 by 36 inches. As a

minimum, the shop drawing submittal shall include the items listed above.

SD-03 Product Data

Wiring and cable

Notification appliances

Smoke sensor testing procedures

Submit data on proposed equipment, including, but not limited to the items listed above. Include UL or FM listing cards for equipment provided.

SD-06 Test Reports

Furnish preliminary test results to the Contracting Officer. Include the control panel and initiating and indicating devices, a unique identifier for each device with an indication of test results, and signature of the factory-trained technician of the control panel manufacturer and equipment installer. With reports on preliminary tests, include printer information.

SD-07 Certificates

Qualifications of installer

SD-10 Operation and Maintenance Data

INTERIOR FIRE ALARM SYSTEM

Submit in accordance with Section 01 78 23 OPERATION AND MAINTENANCE DATA.

Record drawing software

SD-11 Closeout Submittals

Prepare and submit to the Contracting Officer six sets of detailed as-built drawings. The drawings shall include complete wiring diagrams showing connections between devices and equipment, both factory and field wired. Include a riser diagram and drawings showing the as-built location of devices and equipment. The drawings shall show the system as installed, including deviations from both the project drawings and the approved shop drawings. The drawings shall be prepared on uniform sized mylar sheets not less than 30 by 42 inches with 8 by 4 inch title block similar to contract drawings. These drawings shall be submitted within 2 weeks after the final acceptance test of the system. At least one set of as-built (marked-up) drawings shall be provided at the time of, or prior to the final acceptance test.

Submit the installer’s training history for the employees involved with this contract.

1.5 ADDITIONAL SUBMITTAL REQUIREMENTS

1.5.1 Battery Power Calculations

Verify that battery capacity exceeds supervisory and alarm power

requirements.

a. Provide complete battery calculations for both the alarm and supervisory power requirements. Ampere hour requirements for each system component shall be submitted with the calculations.

b. Provide data on each circuit to indicate that there is at least 25 percent spare capacity for notification appliances, 25 percent spare capacity for initiating devices. Annotate data for each circuit on the drawings.

1.5.2 Qualifications of Installer

Installer shall have an office, which has been in existence for at least 3 years, within a 30 mile radius of the job site. Installation shall be accomplished by an electrical contractor with a minimum of 5 years' experience in the installation of fire alarm systems. The Contracting Officer may reject any proposed installer who cannot show evidence of such qualifications. The services of a technician provided by the control equipment manufacturer shall be provided to supervise installation, adjustments, and tests of the system. The Contractor shall furnish evidence that the fire alarm equipment supplier has an experienced and effective service organization which carries a stock of repair parts for the system to be furnished. The Contractor shall guarantee labor, materials, and equipment provided under this contract against defects for a period of one year after the date of final acceptance of this work by the Contracting Officer and the receipt of as-built drawings and schematics of all equipment. Prior to installation, submit data for approval by the , Naval Facilities Engineering Command, Fire Protection Engineer, showing that the Contractor has successfully installed addressable, analog intelligent interior fire alarm systems of the same type as specified herein, or that the Contractor has a firm contractual agreement with a subcontractor having such required experience. Include the names and locations of at least three installations where the Contractor, or the subcontractor referred to above, has installed such systems. Indicate the type and design of each system and certify that each system has performed satisfactorily in the manner intended for a period of not less than 18 months. Submit names and phone numbers of points of contact at each site.

1.5.3 Record Drawing Software

Furnish one set of floppy diskettes containing CAD based drawings in DXF format of as-built drawings and schematics.

1.6 QUALITY ASSURANCE

Equipment and devices shall be compatible and operable with existing station fire alarm system and shall not impair reliability or operational functions of existing supervising station fire alarm system.

1.6.1 Regulatory Requirements

Devices and equipment for fire alarm service shall be listed by UL Fire Prot Dir or approved by FM APP GUIDE.

1.6.1.1 Requirements for Fire Protection Service

Equipment and material shall have been tested by UL and listed in

UL Fire Prot Dir or approved by FM and listed in FM APP GUIDE. Where the terms "listed" or "approved" appear in this specification, they shall mean listed in UL Fire Prot Dir or FM APP GUIDE. The omission of these terms under the description of any item of equipment described shall not be construed as waiving this requirement.

1.6.1.2 Testing Services or Laboratories

Fire alarm and fire detection equipment shall be constructed in accordance with UL Fire Prot Dir, UL Electrical Constructn, or FM APP GUIDE.

1.6.2 Standard Products

Provide materials, equipment, and devices that have been tested by a nationally recognized testing laboratory, such as UL or FM, and listed or approved for fire protection service when so required by NFPA 72 or this specification. Select material from one manufacturer, where possible, and not a combination of manufacturers, for any particular classification of materials.

1.6.3 Modification of References

a. In NFPA publications referred to herein, consider advisory provisions to be mandatory, as though the word "shall" had been substituted for "should" wherever it appears; interpret reference to "authority having jurisdiction" to mean the , Naval Facilities Engineering Command, Fire Protection Engineer.

1.7 DELIVERY, STORAGE, AND HANDLING

Protect equipment delivered and placed in storage from the weather, humidity, and temperature variation, dirt and dust, and other contaminants.

1.8 SPARE PARTS AND TOOLS

1.8.1 Interchangeable Parts

Spare parts furnished shall be directly interchangeable with the corresponding components of the installed system. Spare parts shall be suitably packaged and identified by nameplate, tagging, or stamping. Spare parts shall be delivered to the Contracting Officer at the time of the final acceptance testing.

1.8.2 Spare Parts

Furnish the following spare parts and accessories:

a. 2 smoke sensors and base of each type installed

1.8.3 Parts List

Furnish a list, in duplicate, of all other parts and accessories which the manufacturer of the system recommends to be stocked for maintenance.

PART 2 PRODUCTS

2.1 FIRE ALARM SYSTEM

Provide the illustrated changes to the existing addressable fire

detection, alarm and control system with horn/strobe and speaker/strobe signaling devices in compliance with all applicable codes and authorities having jurisdiction.

The system design and installation shall conform to the following standards:

a. All new equipment shall be UL listed for its intended purpose and cross listed for addition to the existing system.

b. All new equipment shall be UL listed for its intended purpose and cross listed for addition to the existing system.

c. BOCA Basic Building Code

d. State Building Code.

e. The Americans with Disabilities Act (ADA)

f. All requirements of the Authority Having Jurisdiction (AHJ)

All requirements of the Authority Having Jurisdiction (AHJ)

Equipment shall be by electrical contractor

2.2 EXISTING FIRE ALARM EQUIPMENT

Existing fire alarm equipment shall be maintained fully operational until the new equipment has been tested and accepted by the Contracting Officer. As new equipment is installed, it shall be labeled "NOT IN SERVICE" until the new equipment is accepted. Once the new system is completed, tested, and accepted by the Government, it shall be placed in service and connected to the station fire alarm system. New equipment shall have tags removed and the existing equipment shall be tagged "NOT IN SERVICE" until removed from the building.

2.2.1 Equipment Removal

After acceptance of the new system by the Contracting Officer, existing equipment not connected to the new system shall be removed, unused exposed conduit shall be removed, and damaged surfaces shall be restored. The material shall be removed from the site and disposed of by the Contractor.

2.2.2 Repair Service/Replacement Parts

Repair services and replacement parts for the system furnished under this contract shall be be available for a period of 10 years after the date of final acceptance of this work by the Contracting Officer. On-site service during the guarantee period shall be provided within 24 hours after notification. All repairs shall be completed within 48 hours after notification.

2.2.3 Manufacturer Qualifications

Components shall be of current design and shall be in regular and recurrent production at the time of installation. Provide design, materials, and devices for a protected premises fire alarm system, complete, conforming to NFPA 72, except as otherwise or additionally

specified herein.

2.3 INTERIOR FIRE ALARM SYSTEM DESIGN

2.3.1 Definitions

Wherever mentioned in this specification or on the drawings, the equipment, devices, and functions shall be defined as follows:

a. Analog/Addressable System: A system in which multiple signals are transmitted via the same conduction path to a remote fire alarm control unit and fire alarm control panel, decoded and separated so that each signal will initiate the specified response.

b. Hard Wired System: A system in which alarm and supervisory initiating devices are directly connected, through individual dedicated conductors, to a central control panel without the use of analog/addressable circuits or devices.

c. Interface Device: An addressable device which interconnects hard wired systems or devices to an analog/addressable system.

d. Fire Alarm Control Unit: A control panel, remote from the fire alarm control panel, that receives inputs from automatic and manual fire alarm devices; may supply power to detection devices and interface devices; may provide transfer of power to the notification appliances; may provide transfer of condition to relays or devices connected to the control unit; and reports to and receives signals from the fire alarm control panel.

e. Fire Alarm Control Panel (FACP): A master control panel having the features of a fire alarm control unit and to which fire alarm control units are interconnected. The panel has central processing, memory, input and output terminals.

f. Terminal Cabinet: A steel cabinet with locking, hinge-mounted door in which terminal strips are securely mounted.

2.3.2 Sequence of Operation

The operation of a manual station or activation of any automatic alarm initiating device (smoke, heat, waterflow, sprinkler preaction or deluge water flow, kitchen hood fire suppression initiation) shall automatically:

a. Sound all audible devices throughout the building in a synchronized code 3 temporal pattern, except in designated areas of assembly. In areas of assembly, sound 3 repetitions of synchronized code 3 temporal pattern followed by an approved pre-recorded voice evacuation message. Provide for manual voice messaging from the microphones located at the remote annunciator.

b. Flash all visual signals throughout the building in a synchronized fashion.

c. Flash an alarm LED and sound an audible signal at the FACP. Upon Acknowledgment, the alarm LED shall light steadily and the audible shall silence. Subsequent alarms shall re-initiate this sequence.

d. Initiate the transmission of an alarm to the Municipal Fire Station

via the master box or auto dialer.

e. Visually indicate the alarm initiating device type and location via the LCD display located at the FACP.

f. Visually annunciate on all system annunciators the initiating device type and location.

g. Activate the outside weatherproof beacon.

h. Record the alarm in the event history log, and print a record of the alarm on the system printer where applicable.

i. Alarm by an elevator lobby smoke detector shall recall all elevators that serve the lobby to the ground floor. If the alarm initiates on the ground floor, return the elevator to the floor above or as directed by the local authority having jurisdiction.

j. Shunt trip hydraulic elevator power supply where associated with initiating device is mounted adjacent to sprinkler head.

k. Activate prioritized output relays to shut down affected supply and return air handlers, and initiate stairwell and elevator pressurization or smoke exhaust fans as required.

l. Operate prioritized outputs to release all magnetically held smoke doors and magnetically locked doors throughout the building.

The operation of a sprinkler tamper, a duct smoke detector, sprinkler preaction or deluge system trouble, kitchen fire suppression panel trouble, operating power failure, ground faults or open circuits shall automatically:

a. Flash a trouble LED and sound an audible signal at the FACP. Upon Acknowledgment, the trouble LED shall light steadily and the audible shall silence. Subsequent trouble shall re-initiate this sequence.

b. Visually indicate the trouble initiating device type and location via the LCD display located at the FACP.

c. Activation of single station smoke detector shall sound integral alarm signal only and shall not be connected to control panel.

2.3.3 Control

General Requirements

a. Addressable loop wiring (Signaling Line Circuits - SLC) shall be wired in a Class B, Style 4 OR Class A, Style 7 method. Each circuit shall allow for a minimum of 25% additional devices.

b. Non-addressable loop wiring (Initiating Device Circuits - IDC) shall be wired in a Class B, Style B OR Class A, Style D method.

c. Audible and visual circuits (Notification Appliance Circuits - NAC) shall be wired in a Class B, Style Y OR Class A, Style Z method. Each circuit shall allow for a minimum of 25% additional devices. Provide a minimum of two (2) circuits per floor or area, alternately wiring adjacent notification appliances between circuits.

Remote Cabinets

a. Provide distributed intelligent power supplies to accommodate the power requirements of NAC circuits. Power supplies shall communicate with the FACP via data communications, whereby each power supply shall report a loss of AC power, battery fail or ground fault, and each notification appliance circuit served shall be individually monitored for wiring integrity.

b. Standby batteries shall support the system in the event of a loss of primary power for 60 hours of full supervisory operation followed by 10 minutes of alarm. Batteries shall be mounted integral to the FACP.

c. Provide fire alarm terminal cabinets where necessary. The cabinets shall have a removable hinged cover with lock and high barrier terminal strips with 64 or 128 point capacity mounted to a plywood backboard. Terminal cabinets shall be red and labeled with permanent white lettering.

2.3.4 Initiating Devices and Accessories

Provide addressable detectors as shown on the drawings. Detectors shall be connected to the addressable loop with two wires. All detectors shall incorporate built-in identification for the system to automatically identify various types of sensors. Detectors shall utilize a flashing LED which denotes normal operation, and latched LED which indicates an alarm condition. All common types of analog detectors shall be interchangeable with common twist-lock bases. The standard base shall have a supervised LED output, and optional relay and isolator bases shall be available.

Analog sensors shall provide indication to the control panel that a detector requires maintenance, and shall operate in stand-alone mode in the event of an addressable loop communications failure.

Analog Photoelectric Smoke Detectors shall be continually monitored to measure any change in their sensitivity because of the environment (dirt, air temperature, humidity, etc.), and shall allow changes in sensitivity levels within the UL approved sensor's range. the photoelectric detector shall consist of a dust resistant, field cleanable photo chamber with microprocessor based solid state electronics.

a. Provide analog/addressable photoelectric smoke sensors utilizing the photoelectric light scattering principle for operation in accordance with UL 268. Smoke sensors shall be listed for use with the fire alarm control panel.

b. Provide self-restoring type sensors which do not require any readjustment after actuation at the FACP to restore them to normal operation. Sensors shall be UL listed as smoke-automatic fire sensors.

c. Components shall be rust and corrosion resistant. Vibration shall have no effect on the sensor's operation. Protect the detection chamber with a fine mesh metallic screen which prevents the entrance of insects or airborne materials. The screen shall not inhibit the movement of smoke particles into the chamber.

d. Provide twist lock bases for the sensors. The sensors shall maintain contact with their bases without the use of springs. Provide

companion mounting base with screw terminals for each conductor. Terminate field wiring on the screw terminals. The sensor shall have a visual indicator to show actuation.

e. The sensor address shall identify the particular unit, its location within the system, and its sensitivity setting. Sensors shall be of the low voltage type rated for use on a 24 VDC system.

f. An operator at the control panel, having a proper access level, shall have the capability to manually access the following information for each initiating device.

(1) Primary status
(2) Device type
(3) Present average value
(4) Present sensitivity selected
(5) Sensor range (normal, dirty, etc.)

g. Smoke sensors shall be tested in accordance with manufacturer's recommended calibrated test method. Submit smoke sensor testing procedures for approval.

Analog Duct Smoke Detectors shall be continually monitored to measure any change in their sensitivity because of the environment (dirt, air temperature, humidity, etc.), and shall allow changes in sensitivity levels within the UL approved sensor's range. Detector shall be photoelectric OR ionization in accordance with the ceiling mounted device specified above. Duct detectors shall be supplied with a housing, remote indicator and sampling tubes sized according to duct width. Two programmable form C contact outputs will be provided with each device to provide the required HVAC control interface functions.

a. Duct smoke sensors shall be analog/addressable photoelectric type as described in paragraph entitled "Photoelectric Smoke Sensors," and shall be provided in ductwork in accordance with NFPA 90A and in accordance with manufacturer’s recommendations.

Furnish each duct smoke detector with alarm and remote test control station. Test control shall be key actuated two position Test-Normal.

Analog Multi-Sensing Detectors shall employ photoelectric, ionization and thermal sensing principles. Sensors shall allow changes in sensitivity levels within the UL approved sensor's range.

Monitor Modules shall be provided to monitor and connect conventional initiating devices onto the addressable loop.

2.3.5 Notification Devices and Accessories

Primary Notification Appliances shall be flush mounted combination horn/strobe units. Assembly shall be mounted on red lexan frame, on surface or flush wall box. Where box is surface mounted, it shall be red cast aluminum.

Visual signal shall be self-synchronizing xenon strobes rated by UL 1971 test criteria and in accordance with the Americans with Disabilities Act and NFPA 72. Visual signals shall have a minimum effective intensity rating of 15 candela(cd) or as otherwise specified on the drawings. Devices specified as 15cd shall be 15/75cd dual rated.

Horn Audible Signals shall produce a minimum reverberant sound level of 85dB, or 15dB above ambient at 10ft., whichever is greater.

Remote Alarm Indicators shall be LED indicators on single gang plastic plates for smoke detectors as indicated on the plans.

2.3.6 System Field Wiring

2.3.6.1 Alarm Wiring

Signaling line circuits and initiating device circuit field wiring shall be copper, No. 16 AWG size conductors at a minimum. Notification appliance circuit conductors, that contain audible alarm devices, shall be solid copper No. 14 AWG size conductors at a minimum. Wire size shall be sufficient to prevent voltage drop problems. Circuits operating at 24 VDC shall not operate at less than 21.6 volts. Circuits operating at any other voltage shall not have a voltage drop exceeding 10 percent of nominal voltage. Power wiring, operating at 120 VAC minimum, shall be No. 12 AWG solid copper having similar insulation. Provide all wiring in rigid metal conduit or intermediate metal conduit. Electrical metallic tubing conduit is acceptable in dry locations not enclosed in concrete or where not subject to mechanical damage. Conceal conduit in finished areas of new construction and wherever practicable in existing construction. The use of flexible conduit not exceeding a 6 foot length shall be permitted in initiating device circuits. Run conduit or tubing concealed unless specifically shown otherwise on the drawings. Shielded wiring shall be utilized where recommended by the manufacturer. For shielded wiring, the shield shall be grounded at only one point, which shall be in or adjacent to the FACP. T-taps are permitted in Style 4 circuits with interconnections occurring on terminal strips. Color coding is required for circuits and shall be maintained throughout the circuit.

2.3.6.2 Conductor Terminations

Labeling of conductors at terminal blocks in terminal cabinets, FACP, and remote fire alarm control units shall be provided at each conductor connection. Each conductor or cable shall have a shrink-wrap label to provide a unique and specific designation. Each terminal cabinet, FACP, and fire alarm control unit shall contain a laminated drawing which indicates each conductor, its label, circuit, and terminal. The laminated drawing shall be neat, using 12 point lettering minimum size, and mounted within each cabinet, panel, or unit so that it does not interfere with the wiring or terminals. Maintain existing color code scheme where connecting to existing equipment.

2.3.7 Notification Appliances

2.3.7.1 Visual Alarm Signals

Provide strobe light visual alarm signals which operate on a supervised 24 volt DC circuit. The strobe lens shall comply with UL 1971 and conform to the Americans With Disabilities Act. The light pattern shall be disbursed so that it is visible above and below the strobe and from a 90 degree angle on both sides of the strobe. The strobe flash output shall be a minimum of 75 candela based on the UL 1971 test. The strobe shall have a xenon flash tube. Visible appliances may be part of an audio-visual assembly. Where more than two appliances are located in the same room or corridor, provide synchronized operation.

2.3.7.2 Fire Alarm Horns

Provide surface mounted electronic multi-tone horns that produce a minimum of four distinct sounds, suitable for use in an electrically supervised circuit. Horns shall have a rating of 90 dBA at 10 feet when tested in accordance with UL 464 while emitting a slow whoop tone. Output from the horn shall be three-pulse temporal pattern. Where horns and strobes are provided in the same location, they may be combined into a single unit.

2.3.7.3 Connections

Provide screw terminals for each notification appliance. Terminals shall be designed to accept the size conductors used in this project without modification.

2.4 WIRING

Provide wiring materials under this section as specified in Section 26 20 00 INTERIOR DISTRIBUTION SYSTEM with the additions and modifications specified herein.

PART 3 EXECUTION

3.1 INSTALLATION OF FIRE ALARM INITIATING AND INDICATING DEVICES

a. Notification Appliance Devices: Locate notification appliance devices where shown on the drawings. Mount assemblies on walls 80 inches above the finished floor or 6 inches below the ceiling whichever is lower. Ceiling mounted speakers shall conform to NFPA 72.

b. Smoke and Heat Sensors: Locate sensors as shown on the drawings on a 4 inch mounting box. Sensors located on the ceiling shall be installed not less than 4 inches from a side wall to the near edge. Those located on the wall shall have the top of the sensor at least 4 inches below the ceiling, but not more than 12 inches below the ceiling. In raised floor spaces, the smoke sensors shall be installed to protect 225 square feet per sensor. Install smoke sensors no closer than 5 feet from air handling supply outlets.

c. The modification of any fire alarm system and the procedures shall comply with the requirements of NFPA 241.

3.2 DISCONNECTION AND REMOVAL OF EXISTING SYSTEM

Fire alarm control panels and fire alarm devices disconnected and removed shall be turned over to the Contracting Officer.

a. The existing fire alarm and smoke detection system shall remain in operation at all times during the installation and commissioning of the new system. Once this new system is on-line and accepted by the Government, remove the old system. As new equipment is installed, label it "NOT IN SERVICE." Upon acceptance, remove labels.

b. Disconnect and remove the existing fire alarm and smoke detection systems where indicated and elsewhere in the specification.

c. Properly dispose of fire alarm outlet and junction boxes, wiring, conduit, supports, and other such items.

3.3 FIELD QUALITY CONTROL

3.3.1 Tests

a. Megger Tests: After wiring has been installed, and prior to making any connections to panels or devices, wiring shall be megger tested for insulation resistance, grounds, and/or shorts. Conductors with 300 volt rated insulation shall be tested at a minimum of 250 VDC. Conductors with 600 volt rated insulation shall be tested at a minimum of 500 VDC. The tests shall be witnessed by the Contracting Officer and test results recorded for use at the final acceptance test.

b. Loop Resistance Tests: Measure and record the resistance of each circuit with each pair of conductors in the circuit short-circuited at the farthest point from the circuit origin. The tests shall be witnessed by the Contracting Officer and test results recorded for use at the final acceptance test.

c. Preliminary Testing: Conduct preliminary tests to ensure that devices and circuits are functioning properly. Tests shall meet the requirements of paragraph entitled "Minimum System Tests." After preliminary testing is complete, provide a letter certifying that the installation is complete and fully operable. The letter shall state that each initiating and indicating device was tested in place and functioned properly. The letter shall also state that panel functions were tested and operated properly. The letter shall include the names and titles of the witnesses to the preliminary tests. The Contractor and an authorized representative from each supplier of equipment shall be in attendance at the preliminary testing to make necessary adjustments.

d. Request for Formal Inspection and Tests: When tests have been completed and corrections made, submit a signed, dated certificate with a request for formal inspection and tests to the Contracting Officer.

e. Final Testing: Notify the Contracting Officer in writing when the system is ready for final acceptance testing. Submit request for test at least 15 calendar days prior to the test date. A final acceptance test will not be scheduled until the operation and maintenance (O&M) manuals are furnished to the Contracting Officer and the following are provided at the job site:

   (1) The systems manufacturer's technical representative

   (2) Marked-up red line drawings of the system as actually installed

   (3) Megger test results

   (4) Loop resistance test results

   (5) Complete program printout including input/output addresses

The final tests shall be witnessed by the Naval Facilities Engineering Command, Fire Protection Engineer. At this time, any and all required tests shall be repeated at their discretion. Following acceptance of the system, as-built drawings and O&M manuals shall be delivered to the Contracting Officer for review and acceptance. In existing buildings, the

transfer of devices from the existing system to the new system and the permission to begin demolition of the old fire alarm system will not be permitted until the as-built drawings and O&M manuals are received.

3.3.2 Minimum System Tests

Test the system in accordance with the procedures outlined in NFPA 72. The required tests are as follows:

a. Verify the absence of unwanted voltages between circuit conductors and ground. The tests shall be accomplished at the preliminary test with results available at the final system test.

b. Verify that the control unit is in the normal condition as detailed in the manufacturer's O&M manual.

c. Test each initiating and indicating device and circuit for proper operation and response at the control unit. Smoke sensors shall be tested in accordance with manufacturer's recommended calibrated test method. Testing of duct smoke detectors shall comply with the requirements of NFPA 72.

d. Test the system for specified functions in accordance with the contract drawings and specifications and the manufacturer's O&M manual.

e. Test both primary power and secondary power. Verify, by test, the secondary power system is capable of operating the system for the time period and in the manner specified.

f. Determine that the system is operable under trouble conditions as specified.

g. Visually inspect wiring.

h. Test the battery charger and batteries.

i. Verify that software control and data files have been entered or programmed into the FACP. Hard copy records of the software shall be provided to the Contracting Officer.

j. Verify that red-line drawings are accurate.

k. Measure the current in circuits to ensure there is the calculated spare capacity for the circuits.

l. Measure voltage readings for circuits to ensure that voltage drop is not excessive.

m. Disconnect the verification feature for smoke sensors during tests to minimize the amount of smoke needed to activate the sensor. Testing of smoke sensors shall be conducted using real smoke. The use of canned smoke is prohibited.

n. Measure the voltage drop at the most remote appliance on each notification appliance circuit.

-- End of Section --

SECTION 31 23 00.00 22

EXCAVATION AND FILL (PWD ME)
06/14

PART 1 GENERAL

1.1 REFERENCES

The publications listed below form a part of this specification to the extent referenced. The publications are referred to in the text by the basic designation only.

ASTM INTERNATIONAL (ASTM)

ASTM C 136	(2006) Standard Test Method for Sieve Analysis of Fine and Coarse Aggregates
ASTM C 33	(2007) Standard Specification for Concrete Aggregates
ASTM D 1140	(2000; R 2006) Amount of Material in Soils Finer than the No. 200 (75-micrometer) Sieve
ASTM D 1556	(2007) Density and Unit Weight of Soil in Place by the Sand-Cone Method
ASTM D 1557	(2007) Standard Test Methods for Laboratory Compaction Characteristics of Soil Using Modified Effort (56,000 ft-lbf/ft3) (2700 kN-m/m3)
ASTM D 2487	(2010) Soils for Engineering Purposes (Unified Soil Classification System)
ASTM D 4318	(2005) Liquid Limit, Plastic Limit, and Plasticity Index of Soils
ASTM D 698	(2007e1) Laboratory Compaction Characteristics of Soil Using Standard Effort (12,400 ft-lbf/cu. ft. (600 kN-m/cu. m.))

U.S. ARMY CORPS OF ENGINEERS (USACE)

EM 385-1-1	(2008) Safety and Health Requirements Manual

STATE OF MAINE (SHS)

SHS MEDOT	(2002) State of Maine Department of Transportation Standard Specifications, including revisions through award of this contract (See http://www.state.me.us/mdot/contractor-consultant-information/ss_standard_specification_2002.php)

1.2 DEFINITIONS

1.2.1 Underdrain Backfill

A layer of clean, poorly graded crushed rock, stone, or natural sand or gravel having a high porosity which is placed beneath a building slab with or without a vapor barrier to cut off the capillary flow of pore water to the area immediately below a slab.

1.2.2 Degree of Compaction

Degree of compaction is expressed as a percentage of the maximum density obtained by the test procedure presented in ASTM D 1557, for general soil types, abbreviated as percent laboratory maximum density.

1.2.3 Hard Materials

Weathered rock, dense consolidated deposits, or conglomerate materials which are not included in the definition of "rock" but which usually require the use of heavy excavation equipment, ripper teeth, or jack hammers for removal.

1.2.4 Rock

Solid homogeneous interlocking crystalline material with firmly cemented, laminated, or foliated masses or conglomerate deposits, neither of which can be removed without systematic drilling and blasting, drilling and the use of expansion jacks or feather wedges, or the use of backhoe-mounted pneumatic hole punchers or rock breakers; also large boulders, buried masonry, or concrete other than pavement exceeding 1 cubic yard in volume. Removal of hard material will not be considered rock excavation because of intermittent drilling that is performed merely to increase production. **SPECIAL NOTE: BLASTING IS NOT PERMITTED ON PORTSMOUTH NAVAL SHIPYARD**.

1.2.5 Non-Hazardous Soils

Non-hazardous soils shall include all soils which, upon generation, do not meet the definition of a hazardous waste as defined by the EPA Hazardous Waste Regulations 40 CFR 260 through 40 CFR 268, 40 CFR 273, and 40 CFR 279 and the State of Maine DEP Hazardous Waste Regulations Chapter 850-855.

1.2.6 Hazardous Soils

Hazardous soils shall include all soils which, upon generation, do meet the definition of a hazardous waste as defined by the EPA Hazardous Waste Regulations 40 CFR 260, 40 CFR 268, 40 CFR 273, and 40 CFR 279 and the State of Maine DEP Hazardous Waste Regulations Chapter 850-855.

1.3 SUBMITTALS

Government approval is required for submittals with a "G" designation; submittals not having a "G" designation are for Contractor Quality Control approval. The following shall be submitted in accordance with Section 01 33 00 SUBMITTAL PROCEDURES:

Submit 15 days prior to starting work.

SD-06 Test Reports

Fill and Backfill Material Testing; G

Submit copies of all laboratory and field test reports within 24 hours of the completion of the test. If applicable, submit unit price item rock quantity surveys at least 24 hours in advance of removal.

1.4 DELIVERY, STORAGE, AND HANDLING

Perform in a manner to prevent contamination or segregation of materials.

1.5 CRITERIA FOR BIDDING

Base bids on the following criteria:

a. Surface elevations shown on drawings are approximate. Contractor shall confirm grades and inverts prior to start of work and ordering of materials.

b. Ground water elevation is estimated to be at or near mean high water level of the Piscataqua River. The Contractor shall include all costs associated with all dewatering efforts. Failure by the Contractor to plan for groundwater conditions shall not be the basis for any claim nor equitable price or contract time adjustments.

c. Borrow material, suitable backfill and bedding material in the quantities required are not available at the project site.

d. Removal of soils and rock beyond the lines and grades indicated will not be grounds for claims for additional payment.

e. Blasting will not be permitted on the Shipyard. Contractors means and methods may include hoe ramming. Provide protection of adjacent facilities as necessary during prosecution of work.

f. Excavation, handling and disposal requirements for excavated non-hazardous soils shall be in accordance with the requirements specified below.

g. Suitable, non-hazardous soils excavated may be reused in earthwork operations, if the material meets the physical soil properties specified for backfill material.

h. Any stockpiling of non-hazardous soils shall comply with the current MEDEP Erosion and Sediment Control Best Management Practices (BMPs) and other applicable requirements.

i. Any suspect soils encountered within the limits of work shall be classified by the Contracting Officer and PWD-ME Environmental personnel by visual means. The Government may perform laboratory testing to confirm soils classification as hazardous or non-hazardous.

j. All excess soils shall be transported directly to Building 357 for Government disposal of the soils. Under no circumstances shall any excavated soils leave the Shipyard.

k. For purpose of bidding, assume the soils within the limits of work are Non-Hazardous.

1.6 REQUIREMENTS FOR OFF SITE SOIL

Borrow Site Testing: Soils brought in from off site shall be tested for the following contaminants:

a. Total Petroleum Hydrocarbons (TPH) using the GC/FID Method;
b. Benzene, Toluene, Ethyl Benzene, and Xylene (BTEX);
c. Full RCRA 8 Metals;
d. Toxicity Characteristic Leaching Procedure (TCLP) RCRA 8 Metals;
e. Polychlorinated Biphenyls (PCBs);
f. Polycyclic Aromatic Hydrocarbons (PAHs); and
g. Pesticides and Herbicides

Soil shall not contain any contaminant concentration which exceeds the current Residential Scenario values listed in Appendix 1 of the Remedial Action Guidelines (RAGs), as established by the Maine Department of Environmental Protection (MEDEP) Bureau of Remediation and Waste Management. Backfill shall not contain any TCLP concentration which exceeds the current Environmental Protection Agency (EPA) values listed in 40 CFR §261.24, Table 1 Maximum Concentration of Contaminants for Toxicity Characteristic EPA limits. TPH CONCENTRATIONS SHALL NOT EXCEED 100 Mg/Kg. Representative sampling and testing of the backfill shall be conducted at a rate of 1 sample for every 1,000 tons, with a minimum of 1 sample per borrow source. Chemical analysis of the samples shall be performed by a certified laboratory using the most current Environmental Protection Agency (EPA) approved methods. Backfill shall not be brought on site until all laboratory test results have been approved by the Contracting Officer. Aggregates containing less than 10% fines (material passing the number 4 sieve) shall not require testing. Borrow pits shall meet all appropriate state certification guidelines. Written confirmation that the purchased backfill material did not come from a chemically impacted area shall be provided by borrow pit supplier. Proof of certification and written confirmation shall be provided to the Contracting Officer prior to backfill being brought on site.

1.7 QUALITY ASSURANCE

1.7.1 Utilities

Movement of construction machinery and equipment over pipes and utilities during construction shall be at the Contractor's risk. Perform work adjacent to non-Government utilities as indicated in accordance with procedures outlined by utility company. Excavation made with power-driven equipment is not permitted within two feet of known Government-owned utility or subsurface construction. For work immediately adjacent to or for excavations exposing a utility or other buried obstruction, excavate by hand. Start hand excavation on each side of the indicated obstruction and continue until the obstruction is uncovered or until clearance for the new grade is assured. Support uncovered lines or other existing work affected by the contract excavation until approval for backfill is granted by the Contracting Officer. Report damage to utility lines or subsurface construction immediately to the Contracting Officer.

PART 2 PRODUCTS

2.1 SOIL MATERIALS

2.1.1 Satisfactory Materials

Any materials classified by ASTM D 2487 as GW, GP, GM, GP-GM, GW-GM, GC, GP-GC, GM-GC, SW, SP free of debris, roots, wood, scrap material, vegetation, refuse, soft unsound particles, and frozen, deleterious, or objectionable materials. Unless specified otherwise, the maximum particle diameter shall be one-half the lift thickness at the intended location.

2.1.2 Unsatisfactory Materials

Materials which do not comply with the requirements for satisfactory materials. Unsatisfactory materials also include man-made fills, trash, refuse, or backfills from previous construction. Unsatisfactory material also includes material classified as satisfactory which contains root and other organic matter, frozen material, and stones larger than 3 inches. The Contracting Officer shall be notified of any contaminated materials.

2.1.3 Cohesionless and Cohesive Materials

Cohesionless materials include materials classified in ASTM D 2487 as GW, GP, SW, and SP. Cohesive materials include materials classified as GC, SC, ML, CL, MH, and CH. Materials classified as GM, GP-GM, GW-GM, SW-SM, SP-SM, and SM shall be identified as cohesionless only when the fines are nonplastic (plasticity index equals zero). Materials classified as GM and SM will be identified as cohesive only when the fines have a plasticity index greater than zero.2.1.4 Backfill and Fill Material

ASTM D 2487, classification GW, GP, GM, SW, SP, SM, with a maximum ASTM D 4318 liquid limit of 35, maximum ASTM D 4318 plasticity index of 12, and a maximum of 25 percent by weight passing ASTM D 1140, No. 200 sieve or meet the SHS MEDOT, Section 703.19 Granular Borrow specification.

2.1.5 Topsoil

Natural, friable soil representative of productive, well-drained soils in the area, free of subsoil, stumps, rocks larger than 1 inch diameter, brush, weeds, toxic substances, and other material detrimental to plant growth. Amend topsoil pH range to obtain a pH of 5.5 to 7.

2.2 BORROW

Obtain borrow materials required in excess of those furnished from excavations from sources outside of Government property.

PART 3 EXECUTION

3.1 PROTECTION

3.1.1 Underground Utilities

The location of the existing utilities shown on the plans are approximate. The Contractor shall physically field verify the location and elevation of the existing utilities indicated prior to starting construction. The Contractor shall submit a PWD Maine Dig Safe Utility Request Form and contact Dig Safe (1-888-344-7233). The Contractor shall confirm the

location of all existing underground utilities prior to commencing any excavation work.

3.1.2 Machinery and Equipment

Movement of construction machinery and equipment over pipes during construction shall be at the Contractor's risk. Repair, or remove and provide new pipe for existing or newly installed pipe that has been displaced or damaged.

3.2 EXCAVATION

3.2.1 General

Excavate to contours, elevations to complete the work indicated on the drawings.

Keep excavations free from water. Excavate soil disturbed or weakened by Contractor's operations, soils softened or made unsuitable for subsequent construction due to exposure to weather. Excavations below indicated depths and/or limits identified in SHS Section 203, Excavation and Embankment and SHS Section 206, Structural Excavation will not be permitted except to remove unsatisfactory material. Unsatisfactory material encountered below the grades shown shall be classified by Contracting Officer and removed as directed. Refill with backfill or structural fill material, depending on location with respect to structures and compact as required in herein. Unless specified otherwise, refill excavations cut below indicated depth with backfill and compact to minimum 95 percent of ASTM D 1557 maximum density. Satisfactory material removed below the depths indicated, without specific direction of the Contracting Officer, shall be replaced with satisfactory materials to the indicated excavation grade; except as specified for spread footings. Determination of elevations and measurements of approved over depth excavation of unsatisfactory material below grades indicated shall be done under the direction of the Contracting Officer. No extra payment will be made for removal of unsuitable soils and replacement with satisfactory material or select fills as may be directed by the Contracting Officer.

3.2.2 Hard Material and Rock Excavation

Remove hard material and rock to elevations indicated in a manner that will leave foundation material in an unshattered and solid condition. Blasting is not allowed. Roughen level surfaces and cut sloped surfaces into benches for bond with concrete. Protect shale from conditions causing decomposition along joints or cleavage planes and other types of erosion.

3.2.3 Excavated Materials

Satisfactory excavated material required for fill or backfill shall be placed in the proper section of the permanent work required or shall be separately stockpiled if it cannot be readily placed. Satisfactory material in excess of that required for the permanent work and all unsatisfactory material shall be disposed of as specified in the paragraph entitled "DISPOSITION OF SURPLUS MATERIAL" herein.

3.2.3.1 Zone 1 Soils

Special attention shall be given by the Contractor to segregate soils

within Zone 1 based on visual observation. Soils suspect of contamination (e.g. - Presence of staining, odor, debris/waste) shall be stockpiled separately from all the materials excavated. All soils, suspect and non-suspect, shall remain stockpiled onsite for a period of time determined by the Contracting Officer to allow for Government coordination of soils sampling, laboratory testing, transport, and disposal. All stockpiled soils shall be placed upon and covered with a minimum of 6 millimeter plastic sheeting. Stockpiles shall remain covered when not being actively worked (e.g. overnight, off-work hours.) All soils excavated from Zone 1 shall ultimately be loaded by the Contractor into Government furnished containers or Government furnished trucks for transport and disposal (per coordination and authorization from PWD-ME Environmental and Code 106.3).

Any excavated bedrock, asphalt, or concrete materials encountered within Zone 1 sitework shall not be considered hazardous and may be transported offsite. Provide proof of certification and written confirmation to the Contracting Officer demonstating conformance within the testing required for off site as discribed herein under Requirements for Off Site Soil prior to transporting materials off site. These materials shall be reasonably free of soil (field determination by Contracting Officer) prior to being loaded and transported offsite. Information regarding the destination of these materials and copies of all required permits shall be submitted to the Contracting Officer. A PNSY "Removal Pass" shall be prepared and shall be signed by an authorized representative of the Contractor. This form shall accompany the materials during transit on the base and shall be turned over to the gate sentry prior to exit. (A copy of the Form can be obtained from the Contracting Officer.) Under no circumstances shall any excavated soils leave the base without proper testing, paperwork, and Government authorization.

3.3 CONTROL OF EXCAVATIONS AND EXCAVATED MATERIALS

All Excavation work shall conform with all applicable OSHA and EM 385-1-1 requirements. All excavation activities shall conform with Shipyard requirements. All excavations shall be closed as soon as work within the excavation is complete. Excavated materials shall not be allowed to spread in an uncontrolled manner nor become contaminated with other debris. All excavations shall be properly barricaded with barricades and suitable warning devices in a good state of repair. The Government will not provide barricades for Contractor use. The following controls also apply:

3.3.1 Unnatural Fill Materials/Industrial Debris

Unnatural fill materials/industrial debris is soil containing buried debris from industrial operations. Materials include, but are not limited to, metal, plastic, brick, concrete, wood, containers, glass, and materials with unusual color or odor. Upon discovery of such materials, notify the Contracting Officer, who will arrange for the PWD ME Environmental Division to inspect the materials.

3.3.2 Hazardous Excavated Materials

If any Hazardous soils are encountered, the excavated materials shall be placed in Government-furnished roll-off type containers or trucks for removal and disposal by the Government. Containers containing such materials must be covered with six (6) mil plastic sheeting, except when placing additional material within. While uncovered, the container must be physically attended by a qualified handler.

3.3.3 Excavated Materials to be Reused as Backfill

a. Excavated non-hazardous soil materials from excavations which will remain open for LESS THAN TWO WEEKS may remain at the site of excavation.

b. Excavated non-hazardous soil materials from excavations which will remain open for MORE THAN TWO WEEKS shall be removed from the site or covered with six (6) mil plastic sheeting and surrounded by erosion/sediment control measures as specified on the drawings, permit requirements and/or State of Maine regulatory requirements.

c. Non-hazardous soils meeting the requirements for backfill material as defined in the project specifications, may be reused in earthwork operations.

d. Any suspect soils encountered during the remainder of the earthwork operations within the limits of work shall be classified by the Contracting Officer and PWD ME Environmental personnel by visual means and/or laboratory testing.

3.3.4 Excavated Materials Unsuitable for Backfill

Upon completion of analytic testing, excavated non-hazardous soil materials unsuitable for backfill, or surplus non-hazardous materials, shall be transported to an appropriate Government approved licensed disposal facility by the Contractor.

To classify the disposal requirements for excess soils, the Contractor shall excavate test pits in the excavation areas collect representative soil and send the samples to a ME-CERT and DOD-ELAP certified, licensed laboratory for testing. The quantity of test pits/soil samples and laboratory tests shall be based on the disposal facility's requirements. Please check with B-357 (HWSF) to detemine what tests need to be performed.

The Contractor shall be responsible for all costs associated with any test pits or stockpiling, including soils excavation, handling, sampling, and laboratory testing as required by the Contractor's disposal facility.

A copy of the test pit logs and laboratory test results shall be provided to the Contracting Officer, PNSY PWD-ME Environmental, and PNSY Code 106.3 at HWSF, B-357 for review. Under no circumstances shall any excavated soils leave the Shipyard without proper testing, paperwork, and the approval of the Contracting Officer.

The excess soils shall be transported directly to Building 357 from the project site to be inspected and weighed by the Government prior to leaving the Shipyard.

The licensed facility must be approved by PWD ME Environmental & PNSY Code 106.3 prior to the any soil leaving the Shipyard. A partial list of approved disposal facilities has been provided below. For a complete listing contact the Contracting Officer.

Aggregate Recycling Corporation (ARC)
Eliot, ME (207)439-5584

Waste Management New Hampshire Turnkey Recycling & Environmental Enterprises Rochester, NH (800)847-5303

Environmental Soil Management, Inc. (ESMI) of New Hampshire Loudon, NH (800)950-7645

MTS Environmental, Inc. Chichester, NH (603)749-4557

Commercial Paving & Recycling Company (CPRC) Scarborough, ME (207)833-3325

The Contractor shall provide documentation to the Contracting Officer that soil removed from the Shipyard was disposed of at the approved disposal facility. Information regarding the destination of these materials and copies of all required permits shall be submitted to the Contracting Officer. A PNSY "Removal Pass" shall be prepared and shall be signed by an authorized representative of the Contractor. This form shall accompany the materials during transit on the base and shall be turned over to the gate sentry prior to exit. (A copy of the Form can be obtained from the Contracting Officer.) Under no circumstances shall any excavated soils leave the base without proper testing, paperwork, and Government authorization.

All excess soils shall be transported directly to Building 357 for Government disposal of the soils. Under no circumstances shall any excavated soils leave the Shipyard.

3.4 SUBGRADE PREPARATION

Unsatisfactory material in surfaces to receive fill or in excavated areas shall be removed and replaced with satisfactory materials as directed by the Contracting Officer. The surface shall be scarified to a depth of 6 inches before the fill is started. Sloped surfaces steeper than 1 vertical to 4 horizontal shall be plowed, stepped, benched, or broken up so that the fill material will bond with the existing material. When subgrades are less than the specified density, the ground surface shall be broken up to a minimum depth of 6 inches, pulverized, and compacted to the specified density. When the subgrade is part fill and part excavation or natural ground, the excavated or natural ground portion shall be scarified to a depth of 12 inches and compacted as specified for the adjacent fill. Material shall not be placed on surfaces that are muddy, frozen, or contain frost. Compaction shall be accomplished by sheepsfoot rollers, pneumatic-tired rollers, steel-wheeled rollers, or other approved equipment well suited to the soil being compacted. Material shall be moistened or aerated as necessary to provide the moisture content that will readily facilitate obtaining the specified compaction with the equipment used. Minimum subgrade density shall be as specified herein.

3.5 FILLING AND BACKFILLING

Fill and backfill to contours, elevations required to complete the work. Compact each lift before placing overlaying lift as specified below.

3.5.1 Backfill and Fill Material Placement

Provide for paved areas and under concrete slabs and tunnels, except where structural fill is provided. Place in 6 inch lifts. Do not place over wet or frozen areas. Place backfill material adjacent to structures as the structural elements are completed and accepted. Place and compact

material to avoid loading upon or against adjacent structures.

3.5.2 Structural Fill Placement

Provide under structures not pile supported. Place in 6 inch lifts. Do not place over wet or frozen areas. Backfill adjacent to structures shall be placed as structural elements are completed and accepted. Place and compact material to avoid loading upon or against adjacent structures.

3.5.3 Backfill and Fill Material Placement Over Pipes and at Walls

Backfilling shall not begin until underground utilities systems have been inspected, tested and approved, and the excavation cleaned of trash and debris. Backfill shall be brought to indicated finish grade. Where pipe is coated or wrapped for protection against corrosion, the backfill material up to an elevation 2 feet above sewer lines and 1 foot above other utility lines shall be free from stones larger than 1 inch in any dimension. Heavy equipment for spreading and compacting backfill shall not be operated closer to foundation or retaining walls than a distance equal to the height of backfill above the top of footing; the area remaining shall be compacted in layers not more than 4 inches in compacted thickness with power-driven hand tampers suitable for the material being compacted. Backfill shall be placed carefully around pipes or tanks to avoid damage to coatings, wrappings, or tanks.

3.5.4 Trench Backfilling

Backfill as rapidly as construction, testing, and acceptance of work permits. Place and compact trench backfill in 6 inch lifts to top of trench and in 6 inch lifts to one foot over pipe outside structures and paved areas.

3.6 BORROW

Where satisfactory materials are not available in sufficient quantity from required excavations, approved borrow materials shall be obtained as specified herein.

3.7 COMPACTION

Determine in-place density of existing subgrade; if required density exists, no compaction of existing subgrade will be required. Density requirements specified herein are for cohesionless materials. When cohesive materials are encountered or used, density requirements may be reduced by 5 percent.

3.7.1 General Site

Compact underneath areas designated for vegetation and areas outside the 5 foot line of the paved area or structure to 90 percent of ASTM D 1557.

3.7.2 Utility Trenches

Compact top 12 inches of subgrades to 95 percent of ASTM D 1557. Compact common fill, fill and backfill material, structural fill material to 95 percent of ASTM D 1557.

3.7.3 Adjacent Area

Compact areas within 5 feet of structures to 95 percent of ASTM D 1557.

3.7.4 Paved Areas

Compact top 12 inches of subgrades to 95 percent of ASTM D 1557. Compact fill and backfill materials to 95 percent of ASTM D 1557.

3.8 FINISH OPERATIONS

3.8.1 Grading

Finish grades as indicated within one-tenth of one foot. Grade areas to drain water away from structures. Maintain areas free of trash and debris. For existing grades that will remain but which were disturbed by Contractor's operations, grade as directed.

3.8.2 Topsoil and Seed

Scarify existing sugrade. Provide 6 inches of topsoil for newly graded finish earth surfaces and areas disturbed by the Contractor. Topsoil shall not be placed whem the subgrade is frozen, excessively wet, extremely dry, or in a condition otherwise detrimental to seeding, planting, or proper grading. If there is insufficient on-site topsoil meeting specified requirements for topsoil, provide topsoil required in excess of that availible. Seed shall match existing vegetation. Provide seed at 5 pounds per 1000 square feet. Provide granular controlled release fertilizer containing the following minimum percentages, by weight, of plant food nutrients:

10 percent availible nitrogen
5 percent availible phosphorus

3.8.3 Protection of Surfaces

Protect newly backfilled, graded, and topsoiled areas from traffic, erosion, and settlements that may occur. Repair or reestablish damaged grades, elevations, or slopes.

3.9 FIELD QUALITY CONTROL

3.9.1 Sampling

Take the number and size of samples required to perform the following tests.

3.9.2 Testing

Perform one of each of the following tests for each material used. Provide additional tests for each source change.

3.9.2.1 Fill and Backfill Material Testing

Test fill and backfill material in accordance with ASTM C 136 for conformance to ASTM D 2487 gradation limits; ASTM D 1140 for material finer than the No. 200 sieve; ASTM D 4318 for liquid limit and for plastic limit; ASTM D 698 or ASTM D 1557 for moisture density relations, as applicable.

3.9.2.2 Select Material Testing

Test select material in accordance with ASTM C 136 for conformance to ASTM D 2487 gradation limits; ASTM D 1140 for material finer than the No. 200 sieve; ASTM D 698 or ASTM D 1557 for moisture density relations, as applicable.

3.9.2.3 Pervious Granular Fill Testing

Test pervious granular fill in accordance with ASTM C 136 for conformance to gradation specified in ASTM C 33.

3.9.2.4 Density Tests

Test density in accordance with ASTM D 1556. Perform an ASTM D 1556 density test at the start of the job and as follows:

a. Density testing per the following will be required at the expense of the Contractor.

b. Bedding and backfill in trenches: One test per 50 linear feet in each lift.

c. Other site areas as follows:

Material Type	Location of Material	Test Frequency
Undisturbed native soil	Structures	Two random tests in building footings and two tests on subgrade within building line.
Fills and backfills	Structures (adjacent to)	One test per structure per 2,000 sq. ft taken 12 inches below finished grade.
Subgrades	Site and parking	One test per lift per 2,500 sq. ft.
Embankments or borrow	Any	One test per lift per 500 cubic yds placed.
Native soil subgrade other than structures and parking	Any	One test or one test per 10,000 sq. ft, whichever is greater.
Borrow	Any	One test per lift per 500 cubic yds placed.

-- End of Section --

NAVSHIPYD-PTSMH-6240/3

NAVSHIPYD PTSMHINST
5090.1 CH-1 (121)

DATE: _____

CONTRACT NO: N40085-_____

EXCAVATION/DEMOLITION MATERIAL REMOVAL PASS

EXCAVATED SOIL SHALL NOT BE REMOVED FROM THE PORTSMOUTH NAVAL SHIPYARD

CONTRACTOR/HAULER:

_____

_____

MATERIAL DESCRIPTION:

_____

SOURCE OF MATERIAL:

_____

APPROVED DESTINATION:

_____

_____

☐ Permit/Authorization Obtained

Truck Number:_____

The signatures below verify that an on site visual inspection of the material has been performed, and that this form is a record of the facts agreed upon:

Contractor Signature:

_____

Authorizing Signature:

_____ Code: _____

Gate Sentry Signature:

_____

RETURN TO NAVFAC-MIDLANT PWD-ME CONTRACTING OFFICER

SECTION 32 12 16

HOT-MIX ASPHALT (HMA) FOR ROADS
08/09

PART 1 GENERAL

1.1 REFERENCES

The publications listed below form a part of this specification to the extent referenced. The publications are referred to within the text by the basic designation only.

AMERICAN ASSOCIATION OF STATE HIGHWAY AND TRANSPORTATION OFFICIALS (AASHTO)

AASHTO M 156	(2013) Standard Specification for Requirements for Mixing Plants for Hot-Mixed, Hot-Laid Bituminous Paving Mixtures
AASHTO M 320	(2010) Standard Specification for Performance-Graded Asphalt Binder

ASPHALT INSTITUTE (AI)

AI MS-2	(1997 6th Ed) Mix Design Methods

ASTM INTERNATIONAL (ASTM)

ASTM C117	(2013) Standard Test Method for Materials Finer than 75-um (No. 200) Sieve in Mineral Aggregates by Washing
ASTM C1252	(2006) Standard Test Methods for Uncompacted Void Content of Fine Aggregate (as Influenced by Particle Shape, Surface Texture, and Grading)
ASTM C127	(2012) Standard Test Method for Density, Relative Density (Specific Gravity), and Absorption of Coarse Aggregate
ASTM C128	(2012) Standard Test Method for Density, Relative Density (Specific Gravity), and Absorption of Fine Aggregate
ASTM C131	(2006) Standard Test Method for Resistance to Degradation of Small-Size Coarse Aggregate by Abrasion and Impact in the Los Angeles Machine
ASTM C136	(2006) Standard Test Method for Sieve Analysis of Fine and Coarse Aggregates
ASTM C142/C142M	(2010) Standard Test Method for Clay Lumps and Friable Particles in Aggregates

ASTM C29/C29M	(2009) Standard Test Method for Bulk Density ("Unit Weight") and Voids in Aggregate
ASTM C88	(2013) Standard Test Method for Soundness of Aggregates by Use of Sodium Sulfate or Magnesium Sulfate
ASTM D140/D140M	(2009) Standard Practice for Sampling Bituminous Materials
ASTM D1461	(2011) Moisture or Volatile Distillates in Bituminous Paving Mixtures
ASTM D2419	(2009) Sand Equivalent Value of Soils and Fine Aggregate
ASTM D242/D242M	(2009) Mineral Filler for Bituminous Paving Mixtures
ASTM D2489/D2489M	(2008) Estimating Degree of Particle Coating of Bituminous-Aggregate Mixtures
ASTM D4791	(2010) Flat Particles, Elongated Particles, or Flat and Elongated Particles in Coarse Aggregate
ASTM D4867/D4867M	(2009) Effect of Moisture on Asphalt Concrete Paving Mixtures

U.S. ARMY CORPS OF ENGINEERS (USACE)

COE CRD-C 171	(1995) Standard Test Method for Determining Percentage of Crushed Particles in Aggregate

1.2 SUBMITTALS

Government approval is required for submittals with a "G" designation; submittals not having a "G" designation are for Contractor Quality Control approval. Submit the following in accordance with Section 01 33 00 SUBMITTAL PROCEDURES:

SD-03 Product Data

Mix Design; G

Contractor Quality Control; G

Material Acceptance; G

1.3 ENVIRONMENTAL REQUIREMENTS

Do not place the hot-mix asphalt upon a wet surface or when the surface temperature of the underlying course is less than specified in Table 3. The temperature requirements may be waived by the Contracting Officer, if requested; however, meet all other requirements, including compaction.

Table 3. Surface Temperature Limitations of Underlying Course	
Mat Thickness, inches	Degrees F
3 or greater	40
Less than 3	45

PART 2 PRODUCTS

2.1 SYSTEM DESCRIPTION

Perform the work consisting of pavement courses composed of mineral aggregate and asphalt material heated and mixed in a central mixing plant and placed on a prepared course. HMA designed and constructed in accordance with this section shall conform to the lines, grades, thicknesses, and typical cross sections shown on the Drawings. Construct each course to the depth, section, or elevation required by the drawings and roll, finish, and approve it before the placement of the next course.

2.1.1 Asphalt Mixing Plant

Plants used for the preparation of hot-mix asphalt shall conform to the requirements of AASHTO M 156 with the following changes:

a. Truck Scales. Weigh the asphalt mixture on approved, certified scales at the Contractor's expense. Inspect and seal scales at least annually by an approved calibration laboratory.

b. Testing Facilities. Provide laboratory facilities at the plant for the use of the Government's acceptance testing and the Contractor's quality control testing.

c. Inspection of Plant. Provide the Contracting Officer with access at all times, to all areas of the plant for checking adequacy of equipment; inspecting operation of the plant; verifying weights, proportions, and material properties; checking the temperatures maintained in the preparation of the mixtures and for taking samples. Provide assistance as requested, for the Government to procure any desired samples.

d. Storage Bins. Use of storage bins for temporary storage of hot-mix asphalt will be permitted as follows:

(1) The asphalt mixture may be stored in non-insulated storage bins for a period of time not exceeding 3 hours.

(2) The asphalt mixture may be stored in insulated storage bins for a period of time not exceeding 8 hours. The mix drawn from bins shall meet the same requirements as mix loaded directly into trucks.

2.1.2 Hauling Equipment

Provide trucks for hauling hot-mix asphalt having tight, clean, and smooth metal beds. To prevent the mixture from adhering to them, the truck beds shall be lightly coated with a minimum amount of paraffin oil, lime solution, or other approved material. Petroleum based products shall not be used as a release agent. Each truck shall have a suitable cover to

protect the mixture from adverse weather. When necessary to ensure that the mixture will be delivered to the site at the specified temperature, truck beds shall be insulated or heated and covers (tarps) shall be securely fastened.

2.1.3 Asphalt Pavers

Provide asphalt pavers which are self-propelled, with an activated screed, heated as necessary, and capable of spreading and finishing courses of hot-mix asphalt which will meet the specified thickness, smoothness, and grade. The paver shall have sufficient power to propel itself and the hauling equipment without adversely affecting the finished surface.

2.1.4 Rollers

Rollers shall be in good condition and shall be operated at slow speeds to avoid displacement of the asphalt mixture. The number, type, and weight of rollers shall be sufficient to compact the mixture to the required density while it is still in a workable condition. Do not use equipment which causes excessive crushing of the aggregate.

2.2 AGGREGATES

Provide aggregates consisting of crushed stone, crushed gravel, crushed slag, screenings, natural sand and mineral filler, as required. Submit sufficient materials to produce 200 lb of blended mixture for mix design verification. The portion of material retained on the No. 4 sieve is coarse aggregate. The portion of material passing the No. 4 sieve and retained on the No. 200 sieve is fine aggregate. The portion passing the No. 200 sieve is defined as mineral filler. Submit all aggregate test results and samples to the Contracting Officer at least 14 days prior to start of construction.

2.2.1 Coarse Aggregate

Provide coarse aggregate consisting of sound, tough, durable particles, free from films of material that would prevent thorough coating and bonding with the asphalt material and free from organic matter and other deleterious substances. All individual coarse aggregate sources shall meet the following requirements:

a. The percentage of loss shall not be greater than 40 percent after 500 revolutions when tested in accordance with ASTM C131.

b. The percentage of loss shall not be greater than 18 percent after five cycles when tested in accordance with ASTM C88 using magnesium sulfate or 12 percent when using sodium sulfate.

c. At least 75 percent by weight of coarse aggregate shall have at least two or more fractured faces when tested in accordance with COE CRD-C 171. Fractured faces shall be produced by crushing.

d. The particle shape shall be essentially cubical and the aggregate shall not contain more than 20 percent percent, by weight, of flat and elongated particles (3:1 ratio of maximum to minimum) when tested in accordance with ASTM D4791.

e. Slag shall be air-cooled, blast furnace slag, with a compacted weight of not less than 75 lb/cu ft when tested in accordance with

ASTM C29/C29M.

f. Clay lumps and friable particles shall not exceed 0.3 percent, by weight, when tested in accordance with ASTM C142/C142M.

2.2.2 Fine Aggregate

Fine aggregate shall consist of clean, sound, tough, durable particles free from coatings of clay, silt, or any objectionable material and containing no clay balls.

a. All individual fine aggregate sources shall have a sand equivalent value not less than 45 when tested in accordance with ASTM D2419.

b. The fine aggregate portion of the blended aggregate shall have an uncompacted void content not less than 45.0 percent when tested in accordance with ASTM C1252 Method A.

c. The quantity of natural sand (noncrushed material) added to the aggregate blend shall not exceed 25 percent by weight of total aggregate.

d. Clay lumps and friable particles shall not exceed 0.3 percent, by weight, when tested in accordance with ASTM C142/C142M

2.2.3 Mineral Filler

Mineral filler shall be nonplastic material meeting the requirements of ASTM D242/D242M.

2.2.4 Aggregate Gradation

The combined aggregate gradation shall conform to gradations specified in Table 4, when tested in accordance with ASTM C136 and ASTM C117, and shall not vary from the low limit on one sieve to the high limit on the adjacent sieve or vice versa, but grade uniformly from coarse to fine.

Table 4. Aggregate Gradations

Sieve Size, inch	Gradation 1 Percent Passing by Mass	Gradation 2 Percent Passing by Mass	Gradation 3 Percent Passing by Mass
1	100	---	---
3/4	76-96	100	---
1/2	68-88	76-96	100
3/8	60-82	69-89	76-96
No. 4	45-67	53-73	58-78
No. 8	32-54	38-60	40-60

Table 4. Aggregate Gradations

Sieve Size, inch	Gradation 1 Percent Passing by Mass	Gradation 2 Percent Passing by Mass	Gradation 3 Percent Passing by Mass
No. 16	22-44	26-48	28-48
No. 30	15-35	18-38	18-38
No. 50	9-25	11-27	11-27
No. 100	6-18	6-18	6-18
No. 200	3-6	3-6	3-6

2.3 ASPHALT CEMENT BINDER

Asphalt cement binder shall conform to AASHTO M 320 Performance Grade (PG). Test data indicating grade certification shall be provided by the supplier at the time of delivery of each load to the mix plant. Submit copies of these certifications to the Contracting Officer. The supplier is defined as the last source of any modification to the binder. The Contracting Officer may sample and test the binder at the mix plant at any time before or during mix production. Obtain samples for this verification testing in accordance with ASTM D140/D140M and in the presence of the Contracting Officer. Furnish these samples to the Contracting Officer for the verification testing, which shall be at no cost to the Contractor. Submit samples of the asphalt cement specified for approval not less than 14 days before start of the test section. Submit copies of certified test data, amount, type and description of any modifiers blended into the asphalt cement binder.

2.4 MIX DESIGN

a. Develop the mix design. The asphalt mix shall be composed of a mixture of well-graded aggregate, mineral filler if required, and asphalt material. The aggregate fractions shall be sized, handled in separate size groups, and combined in such proportions that the resulting mixture meets the grading requirements of the job mix formula (JMF). Submit proposed JMF; do not produce hot-mix asphalt for payment until a JMF has been approved. The hot-mix asphalt shall be designed in accordance with Marshall (MS-02), Superpave (SP-2), or Hveem (MS-02) procedures and the criteria shown in Table 5. Use the hand-held hammer to compact the specimens for Marshall mix design. If the Tensile Strength Ratio (TSR) of the composite mixture, as determined by ASTM D4867/D4867M is less than 75, the aggregates shall be rejected or the asphalt mixture treated with an approved anti-stripping agent. The amount of anti-stripping agent added shall be sufficient to produce a TSR of not less than 75. Provide an antistrip agent, if required, at no additional cost. Sufficient materials to produce 200 pound of blended mixture shall be provided to the Contracting Officer for verification of mix design at least 14 days prior to construction of test section.

2.4.1 JMF Requirements

Submit in writing the job mix formula for approval at least 14 days prior to the start of the test section including as a minimum:

a. Percent passing each sieve size.

b. Percent of asphalt cement.

c. Percent of each aggregate and mineral filler to be used.

d. Asphalt viscosity grade, penetration grade, or performance grade.

e. Number of blows of hand-held hammer per side of molded specimen. (NA for Superpave)

f. Number of gyrations of Superpave gyratory compactor, (NA for Marshall mix design)

g. Laboratory mixing temperature.

h. Lab compaction temperature.

i. Temperature-viscosity relationship of the asphalt cement.

j. Plot of the combined gradation on the 0.45 power gradation chart, stating the nominal maximum size.

k. Graphical plots of stability (NA for Superpave), flow (NA for Superpave), air voids, voids in the mineral aggregate, and unit weight versus asphalt content as shown in AI MS-2.

l. Specific gravity and absorption of each aggregate.

m. Percent natural sand.

n. Percent particles with 2 or more fractured faces (in coarse aggregate).

o. Fine aggregate angularity.

p. Percent flat or elongated particles (in coarse aggregate).

q. Tensile Strength Ratio(TSR).

r. Antistrip agent (if required) and amount.

s. List of all modifiers and amount.

t. Correlation of hand-held hammer with mechanical hammer (NA for Superpave).

u. Percentage and properties (asphalt content, binder properties, and aggregate properties) of reclaimed asphalt pavement (RAP) in accordance with paragraph RECYCLED HOT-MIX ASPHALT, if RAP is used.

Table 5. Mix Design Criteria		
Test Property	50 Blows or Mix Gyrations	75 Blows or Mix Gyrations
Stability, pounds, minimum (NA for Superpave)	*1000	*1800
Flow, 0.01 inch, (NA for Superpave)	8-18	8-16
Air voids, percent	3-5	3-5
Percent Voids in mineral aggregate (VMA),(minimum)		
Gradation 1	13.0	13.0
Gradation 2	14.0	14.3
Gradation 3	15.0	15.0
TSR, minimum percent	75	75
* This is a minimum requirement. The average during construction shall be significantly higher than this number to ensure compliance with the specifications.		
** Calculate VMA in accordance with AI MS-2, based on ASTM C127 and ASTM C128 bulk specific gravity for the aggregate.		

2.4.2 Adjustments to Field JMF

Keep the Laboratory JMF for each mixture in effect until a new formula is approved in writing by the Contracting Officer. Should a change in sources of any materials be made, perform a new laboratory jmf design and a new JMF approved before the new material is used. The Contractor will be allowed to adjust the Laboratory JMF within the limits specified below to optimize mix volumetric properties with the approval of the Contracting Officer. Adjustments to the Laboratory JMF shall be applied to the field (plant) established JMF and limited to those values as shown. Adjustments shall be targeted to produce or nearly produce 4 percent voids total mix (VTM).

TABLE 6. Field (Plant) Established JMF Tolerances	
Sieves	Adjustments (plus or minus), percent
1/2 inch	3
No. 4	3
No. 8	3
No. 200	1

TABLE 6. Field (Plant) Established JMF Tolerances	
Sieves	Adjustments (plus or minus), percent
Binder Content	0.4

If adjustments are needed that exceed these limits, develop a new mix design. Tolerances given above may permit the aggregate grading to be outside the limits shown in Table 4; while not desirable, this is acceptable, except for the No. 200 sieve, which shall remain within the aggregate grading of Table 4.

PART 3 EXECUTION

3.1 PREPARATION OF ASPHALT BINDER MATERIAL

Heat the asphalt cement material avoiding local overheating and providing a continuous supply of the asphalt material to the mixer at a uniform temperature. The temperature of unmodified asphalts shall be no more than 325 degrees F when added to the aggregates.

3.2 PREPARATION OF MINERAL AGGREGATE

Heat and dry the aggregate for the mixture prior to mixing. No damage shall occur to the aggregates due to the maximum temperature and rate of heating used. The temperature of the aggregate and mineral filler shall not exceed 350 degrees F when the asphalt cement is added. The temperature shall not be lower than is required to obtain complete coating and uniform distribution on the aggregate particles and to provide a mixture of satisfactory workability.

3.3 PREPARATION OF HOT-MIX ASPHALT MIXTURE

The aggregates and the asphalt cement shall be weighed or metered and introduced into the mixer in the amount specified by the JMF. Mix the combined materials until the aggregate obtains a uniform coating of asphalt binder and is thoroughly distributed throughout the mixture. Wet mixing time shall be the shortest time that will produce a satisfactory mixture, but no less than 25 seconds for batch plants. Establish the wet mixing time for all plants based on the procedure for determining the percentage of coated particles described in ASTM D2489/D2489M, for each individual plant and for each type of aggregate used. The wet mixing time will be set to at least achieve 95 percent of coated particles. The moisture content of all hot-mix asphalt upon discharge from the plant shall not exceed 0.5 percent by total weight of mixture as measured by ASTM D1461.

3.4 PREPARATION OF THE UNDERLYING SURFACE

Immediately before placing the hot mix asphalt, clean the underlying course of dust and debris. Apply a prime coat and/or tack coat in accordance with the contract specifications.

3.5 TRANSPORTING AND PLACING

3.5.1 Transporting

Transport the hot-mix asphalt from the mixing plant to the site in clean,

tight vehicles. Schedule deliveries so that placing and compacting of mixture is uniform with minimum stopping and starting of the paver. Provide adequate artificial lighting for night placements. Hauling over freshly placed material will not be permitted until the material has been compacted as specified, and allowed to cool to 140 degrees F. To deliver mix to the paver, use a material transfer vehicle operated to produce continuous forward motion of the paver.

3.5.2 Placing

Place and compact the mix at a temperature suitable for obtaining density, surface smoothness, and other specified requirements. On isolated areas where irregularities or unavoidable obstacles make the use of mechanical spreading and finishing equipment impractical, the mixture may be spread and luted by hand tools.

3.6 COMPACTION OF MIXTURE

After placing, the mixture shall be thoroughly and uniformly compacted by rolling. Compact the surface as soon as possible without causing displacement, cracking or shoving. The sequence of rolling operations and the type of rollers used shall be at the discretion of the Contractor. The speed of the roller shall, at all times, be sufficiently slow to avoid displacement of the hot mixture and be effective in compaction. Any displacement occurring as a result of reversing the direction of the roller, or from any other cause, shall be corrected at once. Furnish sufficient rollers to handle the output of the plant. Continue rolling until the surface is of uniform texture, true to grade and cross section, and the required field density is obtained. To prevent adhesion of the mixture to the roller, keep the wheels properly moistened but excessive water will not be permitted. In areas not accessible to the roller, the mixture shall be thoroughly compacted with hand tampers. Any mixture that becomes loose and broken, mixed with dirt, contains check-cracking, or is in any way defective shall be removed full depth, replaced with fresh hot mixture and immediately compacted to conform to the surrounding area. This work shall be done at the Contractor's expense. Skin patching will not be allowed.

3.7 JOINTS

The formation of joints shall be performed ensuring a continuous bond between the courses and to obtain the required density. All joints shall have the same texture as other sections of the course and meet the requirements for smoothness and grade.

3.7.1 Transverse Joints

Do not pass the roller over the unprotected end of the freshly laid mixture, except when necessary to form a transverse joint. When necessary to form a transverse joint, it shall be made by means of placing a bulkhead or by tapering the course. The tapered edge shall be cut back to its full depth and width on a straight line to expose a vertical face prior to placing material at the joint. Remove the cutback material from the project. In both methods, all contact surfaces shall be given a light tack coat of asphalt material before placing any fresh mixture against the joint.

3.7.2 Longitudinal Joints

Longitudinal joints which are irregular, damaged, uncompacted, cold (less than 175 degrees F at the time of placing adjacent lanes), or otherwise defective, shall be cut back a maximum of 3 inches from the top of the course with a cutting wheel to expose a clean, sound vertical surface for the full depth of the course. All cutback material shall be removed from the project. All contact surfaces shall be given a light tack coat of asphalt material prior to placing any fresh mixture against the joint. The Contractor will be allowed to use an alternate method if it can be demonstrated that density, smoothness, and texture can be met.

3.8 CONTRACTOR QUALITY CONTROL

3.8.1 General Quality Control Requirements

Develop and submit an approved Quality Control Plan. Submit aggregate and QC test results. Do not produce hot-mix asphalt for payment until the quality control plan has been approved addressing all elements which affect the quality of the pavement including, but not limited to:

a. Mix Design

3.8.2 Quality Control Testing

Perform all quality control tests applicable to these specifications and as set forth in the Quality Control Program. The testing program shall include, but shall not be limited to, tests for the control of temperatures, Thickness and smoothness. Develop a Quality Control Testing Plan as part of the Quality Control Program.

3.8.2.1 Temperatures

Check temperatures at least four times per lot, at necessary locations, to determine the temperature at the dryer, the asphalt cement in the storage tank, the asphalt mixture at the plant, and the asphalt mixture at the job site.

3.8.2.2 Grade and Smoothness

Conduct the necessary checks to ensure the grade and smoothness requirements are met in accordance with paragraphs MATERIAL ACCEPTANCE and PERCENT PAYMENT.

3.8.2.3 Additional Testing

Any additional testing, which the Contractor deems necessary to control the process, may be performed at the Contractor's option.

3.8.2.4 QC Monitoring

Submit all QC test results to the Contracting Officer on a daily basis as the tests are performed. The Contracting Officer reserves the right to monitor any of the Contractor's quality control testing and to perform duplicate testing as a check to the Contractor's quality control testing.

3.8.3 Sampling

When directed by the Contracting Officer, sample and test any material

which appears inconsistent with similar material being produced, unless such material is voluntarily removed and replaced or deficiencies corrected by the Contractor. All sampling shall be in accordance with standard procedures specified.

3.9 MATERIAL ACCEPTANCE

3.9.1 Temperature

Temperature of the asphalt shall be taken upon delivery to the site as well as final placement. Temperature of the asphalt shall also be taken to allow for traffic flow once the minimum required temperature is met. All results of temperature testing shall be presented to the contracting officer.

3.9.2 Additional Sampling and Testing

The Contracting Officer reserves the right to direct additional samples and tests for any area which appears to deviate from the specification requirements. The cost of any additional testing will be paid for by the Government. Testing in these areas will be in addition to the lot testing, and the requirements for these areas will be the same as those for a lot.

3.9.3 Thickness

Thickness of the final asphalt surface shall be tested for thickness at random locations. All results of thickness testing shall be presented to the contracitng officer.

3.9.4 Surface Smoothness

Use straightedge testing to test and evaluate surface smoothness of the pavement. Perform all testing in the presence of the Contracting Officer. Keep detailed notes of the results of the testing and furnish a copy to the Government immediately after each day's testing. Where drawings show required deviations from a plane surface (crowns, drainage inlets, etc.), the surface shall be finished to meet the approval of the Contracting Officer.

-- End of Section --