PORTSMOUTH NAVAL SHIPYARD
KITTERY, ME

STEAM AND CONDENSATE REPAIR
CENTER LOOP
CONTRACT NO. N40085-##-##-####

LIST OF DRAWINGS

SHEET	SHEET NO.	PWD-ME NO.	NAVFAC DWG. NO.	DRAWING TITLE
1 OF 31	G-001	MS-15-XXXX	12706393	TITLE SHEET
2 OF 31	G-002	MS-15-XXXX	12706394	NOTES
3 OF 31	G-003	MS-15-XXXX	12706395	PHASING, STAGING/STOCKPILE, & TRAFFIC PLAN
4 OF 31	C-001	MS-15-XXXX		CIVIL NOTES
5 OF 31	C-100	MS-15-XXXX	12706396	RAIL REMOVAL AND REINSTALLATION
6 OF 31	C-101	MS-15-XXXX	12706397	TRENCH AND TRENCH COVER PLAN
7 OF 31	C-102	MS-15-XXXX	12706398	TRENCH AND TRENCH COVER PLAN
8 OF 31	C-401	MS-15-XXXX	12706399	DETAILS
9 OF 31	C-402	MS-15-XXXX	12706400	DETAILS
10 OF 31	C-500	MS-15-XXXX		EROSION CONTROL NOTES AND DETAILS
11 OF 31	M-001	MS-15-XXXX	12706402	MECHANICAL LEGEND
12 OF 31	MD101	MS-15-XXXX	12706403	DEMOLITION PLAN
13 OF 31	MD102	MS-15-XXXX	12706404	DEMOLITION PLAN
14 OF 31	MD401	MS-15-XXXX	12706405	STEAM MANHOLES PIPING-DEMOLITION
15 OF 31	MD402	MS-15-XXXX	12706406	STEAM MANHOLES PIPING-DEMOLITION
16 OF 31	MD403	MS-15-XXXX	12706407	STEAM MANHOLES PIPING-DEMOLITION
17 OF 31	MD404	MS-15-XXXX	12706408	STEAM MANHOLES PIPING-DEMOLITION
18 OF 31	MD501	MS-15-XXXX	12706409	SECTIONS AND DETAILS-DEMOLITION
19 OF 31	M-101	MS-15-XXXX	12706410	PIPING PLAN
20 OF 31	M-102	MS-15-XXXX	12706411	PIPING PLAN
21 OF 31	M-201	MS-15-XXXX	12706412	PROFILES
22 OF 31	M-202	MS-15-XXXX	12706413	PROFILES
23 OF 31	M-401	MS-15-XXXX	12706414	STEAM MANHOLES PIPING
24 OF 31	M-402	MS-15-XXXX	12706415	STEAM MANHOLES PIPING
25 OF 31	M-403	MS-15-XXXX	12706416	STEAM MANHOLES PIPING
26 OF 31	M-501	MS-15-XXXX	12706417	DETAILS
27 OF 31	M-502	MS-15-XXXX	12706418	DETAILS
28 OF 31	M-503	MS-15-XXXX	12706419	DETAILS
29 OF 31	M-504	MS-15-XXXX	12706420	DETAILS
30 OF 31	M-601	MS-15-XXXX	12706421	DETAILS
31 OF 31	M-602	MS-15-XXXX	12706422	DETAILS

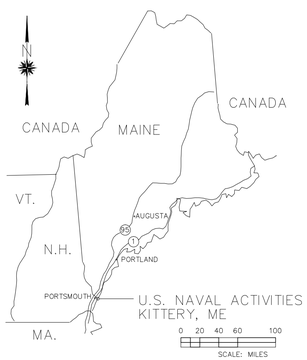

AREA MAP

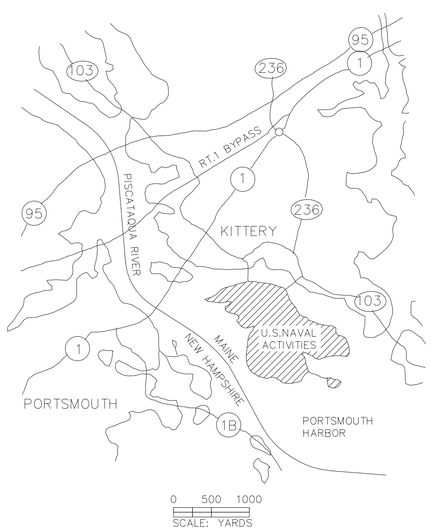

VICINITY MAP

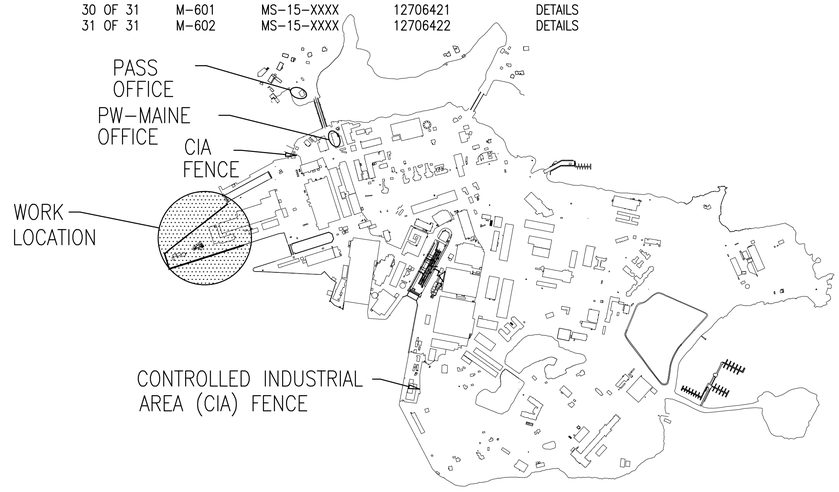

SITE PLAN
NOT TO SCALE

ELEVATION, SECTION OR DETAIL SYMBOLS

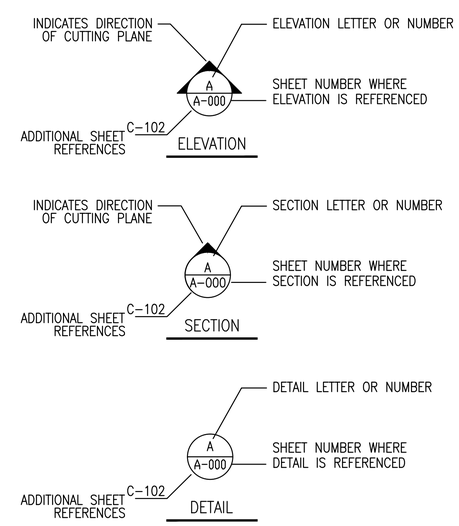

GENERAL LEGEND

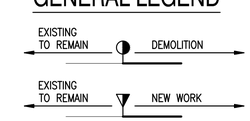

NO.	SYM	DESCRIPTION	DATE	APPR
0		ISSUE OF BID DOCUMENT	01/14/2016	JPC

NAVFAC

COMMONWEALTH OF VIRGINIA
JOHN PATRICK CASTELVECCHI, JR.
Lic. No 043782
01-14-2016
PROFESSIONAL ENGINEER
SEAL

JV
CASCO BAY ENGINEERING
CLD CONSULTING ENGINEERS

APPROVED
FOR COMMANDER NAVFAC
ACTIVITY
SATISFACTORY TO DATE

DES A/E	DRW FP	CHK A/E

PM/DM ROGER ROY
BRANCH MANAGER NATHAN MAHER
FEAD/PM&E AMIN BAHROUR PM&E
FIRE PROTECTION X

DEPARTMENT OF THE NAVY
NAVAL FACILITIES ENGINEERING COMMAND
PUBLIC WORKS DEPARTMENT - MAINE
NAVAL FACILITIES ENGINEERING COMMAND - MID-ATLANTIC
NAVAL SHIPYARD - PORTSMOUTH, NH
PORTSMOUTH NAVAL SHIPYARD KITTERY, MAINE
RMe REPAIR STEAM AND CONDENSATE CENTER LOOP, RM14-0206

TITLE SHEET

EPROJECT NO.: 1370674
CONSTR. CONTR. NO. N40085-##-###-####
NAVFAC DRAWING NO. 12706393
SHEET 1 OF 31
G-001 MS-15-XXX

DRAWFORM REVISION: 10 OCTOBER 2014

FILE NAME: Z:\Clients\ANF\USNavy\M4M4\85860_PNSY\FY16\EM\Design\Mech\Sheets\1 - RM 14-0206 - Repair Steam and Condensate Center Loop\G001.dwg LAYOUT NAME: G001 PLOTTED: Thursday, January 14, 2016 - 4:51pm USER: jpcastelvecchi

GENERAL NOTES

1. PLANS HAVE BEEN COMPILED FROM EXISTING RECORD PLANS, ON-SITE FIELD SURVEY AND OBSERVATION.

2. EXISTING CONDITION CONTOURS SHOWN DEVELOPED BY AERIAL MAPPING PERFORMED BY AERIAL SURVEY & PHOTO, NORRIDGEWOCK, MAINE, JULY 27, 2001. SEE "TOPOGRAPHIC PLAN OF THE PORTSMOUTH NAVAL SHIPYARD KITTERY, MAINE FOR TETRA TECH NUS" DATED 11-22-02.

3. VERTICAL DATUM: PORTSMOUTH NAVAL SHIPYARD 2002

4. HORIZONTAL DATUM: MAINE STATE COORDINATES. WEST ZONE NAD 83.

5. PORTSMOUTH NAVAL SHIPYARD GROUND CONTROL ESTABLISHED BY CIVIL CONSULTANTS, SOUTH BERWICK MAINE FEBRUARY 2002.

6. PROVIDE DRAWINGS FOR CONSTRUCTION LAYOUT OF THE PROPOSED IMPROVEMENTS. ALL FINISHED GRADES WILL PROVIDE POSITIVE DRAINAGE FOR ALL RECONSTRUCTED AREAS.

7. UNLESS OTHERWISE NOTED, ALL EXISTING FEATURES DESIGNATED ON THE PLANS TO REMAIN INCLUDING, BUT NOT LIMITED TO, TREES, SIGNS, SIGN POSTS, CURBS, SIDEWALKS AND BACK OF SIDEWALK FEATURES WILL BE VERIFIED, LOCATED, AND PROTECTED DURING ALL PHASES OF CONSTRUCTION.

8. SURVEY CONTROL BOUNDS AND STREET LINE MONUMENTATION SHALL NOT BE DISTURBED DURING THE COURSE OF WORK AND SHALL BE PROTECTED. SHOULD ANY BOUND BE DISTURBED, THE CONTRACTOR WILL BE REQUIRED TO HIRE, AT HIS OWN EXPENSE, A PROFESSIONAL LAND SURVEYOR LICENSED IN THE STATE OF MAINE TO REPLACE AND / OR RESET THE BOUND TO ITS ORIGINAL POSITION.

9. SALVAGED ITEMS ARE TO BECOME THE PROPERTY OF THE GOVERNMENT.

10. FEATURES MAY BE SHOWN WITHIN THE LIMIT OF WORK THAT ARE NOT EXPLICITLY CALLED OUT FOR REMOVAL OR DEMOLITION. DEMOLISH ALL FEATURES WITHIN THE LIMIT OF WORK REQUIRED TO COMPLETE THE WORK OF THE PROJECT.

11. PREVENT ANY DISTURBANCE OR DAMAGE TO ADJACENT PROPERTIES.

12. YELLOW PLASTIC:
CONTRACTORS SHALL NOT USE YELLOW OR ORANGE-YELLOW COLORED MATERIALS FOR THE FOLLOWING PURPOSES: PROTECTIVE CLOTHING, HOODS, SHEETING, TARPS, POLYETHYLENE BOTTLES OR OTHER CONTAINERS, TAPES, BAGS, BANDING, IDENTIFICATION MARKS ON TOOLS, BOUNDARY MARKERS, RIBBONS, VENT DUCTS, ETC. CONTRACTOR GENERATED YELLOW COLORED WASTE SHALL BE DISPOSED OF BY THE CONTRACTOR OFF-YARD. SHIPYARD REFUSE CONTAINERS SHALL NOT BE USED FOR THE DISPOSAL OF YELLOW COLORED WASTE MATERIALS. YELLOW COLORED ITEMS SUCH AS DESCRIBED ABOVE ARE OF SPECIAL SIGNIFICANCE WITHIN THE SHIPYARD AND ARE SUBJECT TO STRICT CONTROLS. YELLOW COLORED CONTRACT GENERATED DEBRIS SHALL BE BAGGED IN NON-TRANSLUCENT CONTAINERS, AND PROMPTLY REMOVED FROM PORTSMOUTH NAVAL SHIPYARD.

13. CONTRACTOR SHALL REPORT ALL SPILLS AND LEAKS OF OIL OR OTHER HAZARDOUS SUBSTANCES. (IE OIL, ANTIFREEZE, CHEMICALS, ETC.) OCCURRING DURING THE PERFORMANCE OF THIS CONTRACT IMMEDIATELY UPON DISCOVERY, REGARDLESS OF THE QUANTITY. CALL THE FIRE DEPARTMENT AT EXTENSION 2333 TO REPORT THE SPILL. THE GOVERNMENT RESERVES THE RIGHT TO CLEAN UP, PACKAGE AND DISPOSE OF CONTRACTOR SPILLS OCCURRING ON THE SHIPYARD, AND BILL SUCH COSTS TO THE CONTRACTOR.

14. SHOP DRAWINGS SHALL BE CHECKED BY THE CONTRACTOR PRIOR TO SUBMISSION FOR CONTRACTING OFFICER'S APPROVAL.

15. THE PROJECT SITE IS AN OPERATING NAVAL FACILITY. THE CONTRACTOR SHALL COORDINATE WORK TO PERMIT NAVY OPERATIONS TO BE PERFORMED DURING THE COURSE OF WORK. DELAY CLAIMS DUE TO PERIODIC WORK STOPPAGES OR CHANGES IN WORK SEQUENCE BASED ON IMPACTS FROM SHIPYARD OPERATIONS WILL NOT BE ALLOWED. THE CONTRACTOR MAY NEED TO WORK WEEKENDS TO ENSURE SHIPYARD OPERATIONS ARE NOT IMPACTED.

16. THE CONTRACTOR SHALL ENSURE ALL WORK MEETS THE REQUIREMENTS SPECIFIED IN EM 386-1-1 (CURRENT EDITION, INCLUDING LATEST ERRATA AND CHANGES).

17. IN THE EVENT THAT ARCHAELOGICAL RESOURCES ARE IDENTIFIED DURING CONSTRUCTION, WORK SHALL STOP IMMEDIATELY AND CONTRACTING OFFICER SHALL BE CONTACTED FOR FURTHER DIRECTION. WORK SHALL NOT RESUME UNTIL DIRECTED BY THE CONTRACTING OFFICER TO PROCEED.

18. UNFORESEEN HAZARDOUS MATERIAL
THE DESIGN HAS BUDGETED ALLOWANCES FOR IDENTIFIED MATERIALS SUCH AS FRIABLE AND NON-FRIABLE ASBESTOS. IF ADDITIONAL MATERIAL, NOT INDICATED, THAT MAY BE HAZARDOUS TO HUMAN HEALTH UPON DISTURBANCE DURING CONSTRUCTION OPERATIONS IS ENCOUNTERED, STOP THAT PORTION OF WORK AND NOTIFY THE CONTRACTING OFFICER IMMEDIATELY. CONTRACTOR SHALL REFERENCE SEPARATE "ASBESTOS HAZARDOUS MATERIALS ASSESSMENT" DATE 08/20/15 BY TERRACON CONSULTANTS, INC.

UTILITY NOTES:

1. THE CONTRACTOR SHALL VERIFY ALL EXISTING UTILITY INFORMATION AND TIE IN LOCATIONS NEEDED TO COMPLETE THE DESIGN OF NEW UTILITY SYSTEMS AND SITE IMPROVEMENTS. VERIFICATION METHODS SHALL INCLUDE BUT NOT BE LIMITED TO TESTS PITS AND CCTV TO VERIFY LOCATION, ELEVATION, SIZE, MATERIAL, AND ANY OTHER INFORMATION REQUIRED TO COMPLETE THE DESIGN.

2. UTILITIES NOT SHOWN ON THESE PLANS MAY EXIST. THE LOCATION, ELEVATION, SIZE AND MATERIAL OF ALL UTILITIES WILL BE VERIFIED BEFORE PROCEEDING WITH CONSTRUCTION. ALL UTILITY LINES AND ASSOCIATE STRUCTURES, NOT AFFECTED BY THIS PROJECT WILL BE PROTECTED THROUGHOUT ALL PHASES OF WORK.

3. THE LOCATION OF UNDERGROUND UTILITIES WITHIN THE LIMITS OF THE EXCAVATION OR GROUND PENETRATING WORK WILL BE LOCATED PRIOR TO COMMENCING ANY EXCAVATION OR GROUND PENETRATING WORK. "DIG SAFE" (1-888-344-7233) WILL BE NOTIFIED WITHIN 15 CALENDAR DAYS PRIOR TO THE COMMENCEMENT OF THE EXCAVATION OR GROUND PENETRATING ACTIVITY. THE STATE OF MAINE "DIG SAFE" LAW (TITLE 23, MRSA 3360-A) WILL BE FULLY COMPILED WITH.

4. THE EXCAVATOR SHALL PREPARE A "PWD ME DIG SAFE UTILITY LOCATE REQUEST FORM" AT LEAST 15 CALENDAR DAYS PRIOR TO THE COMMENCEMENT OF THE EXCAVATION OR GROUND PENETRATING ACTIVITY AND SUBMIT THE FORM TO THE CONTRACTING OFFICER (PLEASE SEE QC MANAGER FOR FORM).

5. THE GOVERNMENT WILL LOCATE AND MARK THE UNDERGROUND UTILITIES WITHIN 15 CALENDAR DAYS OF RECEIVING THE DIG SAFE NOTIFICATION.

6. EXCAVATION OR GROUND PENETRATION ACTIVITIES CAN NOT COMMENCE UNTIL THE UTILITIES HAVE BEEN MARKED IN THE FIELD AND THE PWD ME DIG SAFE UTILITY LOCATE REQUEST FORM HAS BEEN RETURNED INDICATING THE PWD ME DIG SAFE REVIEW PROCESS HAS BEEN COMPLETED AND EXCAVATION HAS BEEN APPROVED BY THE CONTRACTING OFFICER.

7. IF THE EXCAVATION OR GROUND PENETRATING ACTIVITIES DO NOT COMMENCE WITHIN 15 DAYS OF DIG SAFE NOTIFICATION OR THE EXCAVATION WORK IS EXPANDED OUTSIDE THE LOCATION ORIGINALLY SPECIFIED IN THE NOTIFICATION, THE EXCAVATOR SHALL RE-NOTIFY DIG SAFE, THE CONTRACTING OFFICER AND THE PWD ME DIG SAFE COORDINATOR.

8. THE CONTRACTOR SHALL MAINTAIN THE UTILITY MARKINGS THROUGHOUT THE CONTRACT PERIOD. IF ADDITIONAL MARKINGS ARE REQUIRED, THE EXCAVATOR SHALL RE-NOTIFY DIG SAFE, THE CONTRACTING OFFICER, AND THE PWD ME DIG SAFE COORDINATOR AT 207-438-1082.

9. ALL SEWER AND DRAIN FRAMES AND GRATES OR COVERS WILL BE ADJUSTED TO MATCH PROPOSED FINISHED GRADE. EXISTING FRAMES AND GRATES OR COVERS WILL BE REMOVED AND NEW FRAMES AND GRATES OR COVERS WILL BE PROVIDED IF EXISTING ITEMS ARE DAMAGED DURING THE COURSE OF WORK.

10. ALL ELECTRIC POWER MANHOLE FRAMES AND COVERS WILL BE ADJUSTED TO MATCH FINISH GRADE. REMOVE EXISTING FRAMES AND COVERS AND PROVIDE NEW FRAMES AND COVERS WHEN DAMAGED DURING THE COURSE OF WORK.

11. SHORING SYSTEMS: MECHANICAL MEANS OF EXCAVATION SHALL NOT BE USED WHEN EXCAVATING WITHIN 2 INCHES OF ANY MARKED UNDERGROUND UTILITY UNTIL THE UNDERGROUND UTILITY HAS BEEN EXPOSED. MECHANICAL MEANS MAY BE USED, AS NECESSARY, FOR INITIAL PENETRATION AND REMOVAL OF PAVEMENT, ROCK, OR OTHER MATERIALS REQUIRING USE OF MECHANICAL MEANS OF EXCAVATION. ONCE THE UNDERGROUND UTILITIES HAVE BEEN EXPOSED, FURTHER EXCAVATION SHALL BE PERFORMED EMPLOYING REASONABLE PRECAUTIONS TO AVOID DAMAGE TO THE UNDERGROUND UTILITIES, INCLUDING BUT NOT LIMITED TO ANY SUBSTANTIAL WEAKENING OF STRUCTURAL OR LATERAL SUPPORT OF THE UTILITY OR PENETRATION OR DESTRUCTION OF THE UTILITY OR THEIR PROTECTIVE COATINGS.

12. ADJUST ALL GATE VALVE BOXES AND CURB STOP BOXES TO FINISH GRADE. REMOVE EXISTING GATE VALVE BOXES AND CURB STOP BOXES AND PROVIDE NEW GATE VALVE BOXES AND CURB STOP BOXES WHEN DAMAGED DURING THE COURSE OF WORK.

13. THE COST FOR THE ADJUSTMENT OR RELOCATION OF PRIVATE UTILITY PIPES, STRUCTURES AND CASTINGS, INCLUDING BUT NOT LIMITED TO GAS, CABLE TV, AND TELEPHONE, SHALL BE PAID BY THE CONTRACTOR. COMPLETION OF SUCH WORK MAY OR MAY NOT BE COMPLETED BY THE PRIVATE UTILITY OWNER. THE CONTRACTOR SHALL COORDINATE ALL WORK WITH THE PRIVATE UTILITY COMPANIES. CONTACT: NORTHERN UTILITIES, AT&T/BROADBAND, VERIZON AND ANY OTHER PRIVATE UTILITY OWNERS.

14. PREVENT DEBRIS FROM ENTERING INLETS AND BASINS. PROVIDE AND MAINTAIN INLET PROTECTION FOR THE DURATION OF THE WORK. INSPECT INLETS WEEKLY AND AFTER EACH STORM EVENT, AND REMOVE ACCUMULATED DEBRIS. CLEAN ALL STRUCTURES AT THE COMPLETION OF THE WORK.

15. WHERE ITEMS SUCH AS UTILITY STRUCTURES AND EARTHWORK MATERIALS ARE INDICATED BY TYPE, SEE THE MEDOT STANDARD SPECIFICATIONS, HIGHWAY AND BRIDGES, NOVEMBER 2014 EDITION.

CONSTRUCTION NOTES:

1. WHEELED OR TRACKED VEHICLES SHALL NOT OPERATE IN THE WATER. EQUIPMENT MAY OPERATE ON SHORE AND REACH INTO THE WATER WITH A BUCKET OR SIMILAR EXTENSION.

2. ALL WORK REQUIRED BELOW THE HIGH WATER LINE SHALL BE COMPLETED AT LOW TIDE.

3. THE CONTRACTOR SHALL COORDINATE MATERIAL STORAGE AND LAYDOWN AREAS WITH CONTRACTING OFFICER.

4. ALL CONSTRUCTION MATERIALS SHALL BE TRANSPORTED TO AND FROM THE SITE IN COVERED VEHICLES. THE CONTRACTOR SHALL VACUUM ASSISTED STREET SWEEPER AVAILABLE AT THE SITE ON A DAILY BASIS TO KEEP TRAFFIC AREAS CLEAN.

5. THE CONTRACTOR SHALL BE RESPONSIBLE FOR COORDINATING WITH PORTSMOUTH SHIPYARD OPERATIONS DURING THE PROCESS OF THE WORK.

6. THE CONTRACTOR SHALL SUBMIT A DETAILED CONSTRUCTION SEQUENCING PLAN FOR REVIEW AND APPROVAL PRIOR TO CONSTRUCTION.

7. THE CONTRACTOR SHALL BE RESPONSIBLE FOR FOR MAINTAINING SECURITY AT ALL TIMES DURING CONSTRUCTION.

8. CONTRACTOR SHALL COMPLY WITH ALL APPLICABLE O.S.H.A. REGULATIONS AND SAFETY REQUIREMENTS.

9. ALL CONSTRUCTION SIGNS SHALL BE DESIGNED TO WITHSTAND 50MPH WINDS VELOCITY WINDS AND ARE PREPARED BY A PROFESSIONAL SIGN COMPANY WITH A MINIMUM OF THREE (3) YEARS EXPERIENCE.

10. WORKING HOURS SHALL COMPLY WITH PNSY.

11. WHERE CONTRACTOR REMOVES EXISTING SITE FEATURES THAT ARE TO REMAIN, TO FACILITATE INSTALLATION OF NEW WORK FOR THIS PROJECT, CONTRACTOR SHALL REPLACE THE EXISTING SITE FEATURES AT CONTRACTORS EXPENSE.

12. THE CONSTRUCTION LIMIT LINE SHOWN ON DRAWING IS AN APPROXIMATION OF THE CONSTRUCTION LIMITS. THE CONTRACTOR IN COORDINATION WITH THE OWNER. OWNER MAY MODIFY THIS LINE TO ACCOMMODATE THE EFFICIENCY OF CONSTRUCTION PROJECT.

13. ALL CONSTRUCTION DETAILS AND SPECIFICATION ARE PROVIDED TO MEET NAVFAC MID ATLANTIC PUBLIC WORKS DEPARTMENT MAINE FOR PORTSMOUTH NAVAL SHIPYARD.

RAIL TRACKS

1. CONTRACTOR SHALL COORDINATE WITH PWD-ME CONSTRUCTION OFFICER FOR RECERTIFICATION OF ALL AFFECTED RAIL TRACKS DUE TO WORK AFTER THEIR REINSTALLATION.

DEMOLITION:

1. THE CONTRACTOR SHALL PROVIDE CONTROL MEASURES AS REQUIRED BY ENVIRONMENTAL REGULATIONS AND AS REQUIRED TO PREVENT DEBRIS CONTAMINANTS (SOLID, LIQUID OR DISSOLVED) FROM ENTERING THE RIVER.

2. ALL MATERIALS DEMOLISHED AND NOT REUSED OR SALVAGED TO THE GOVERNMENT SHALL BECOME THE PROPERTY OF THE CONTRACTOR AND SHALL BE REMOVED DAILY FROM THE GOVERNMENT'S PROPERTY. REMOVED MATERIAL SHALL BE DISPOSED OF IN ACCORDANCE WITH ALL LOCAL, STATE AND FEDERAL LAWS.

3. THE CONTRACTOR IS RESPONSIBLE FOR THE REMOVAL OF ALL DEBRIS RESULTING FROM DEMOLITION.

AS BUILT NOTES:

1. PLANS HAVE BEEN COMPILED FROM EXISTING RECORD PLANS CONTRACTOR SHALL REVISE 2 SETS OF PAPER DRAWINGS BY RED-LINE PROCESS TO SHOW THE AS-BUILT CONDITIONS DURING THE PROSECUTION OF THE PROJECT. THE CONTRACTOR SHALL KEEP THE AS-BUILT DRAWINGS CURRENT ON A WEEKLY BASIS AND AT LEAST ONE SET AVAILABLE ON THE JOB SITE AT ALL TIMES. THE PLANS SHALL BE PREPARED IN ACCORDANCE WITH THE REQUIREMENTS SPECIFIED IN SECTION 01 78 00.00 22 CLOSEOUT SUBMITTALS.

AS BUILT NOTES:

1. CHANGES FROM THE CONTRACT PLANS WHICH ARE MADE IN THE WORK OR ADDITIONAL INFORMATION WHICH MIGHT BE UNCOVERED IN THE COURSE OF CONSTRUCTION MUST BE ACCURATELY AND NEATLY RECORDED AS THEY OCCUR BY MEANS OF DETAILS AND NOTES. THE CONTRACTOR SHALL PREPARE AND PROVIDE TO THE CONTRACTING OFFICER WORKING RECORD (AS-BUILT) DRAWINGS AFTER THE COMPLETION OF EACH DEFINABLE FEATURE OF WORK AS LISTED IN THE CONTRACTOR QUALITY CONTROL PLAN (FOUNDATIONS, UNDERGROUND UTILITIES, STRUCTURAL STEEL, ETC., AS APPROPRIATE FOR THE PROJECT). IF THE CONTRACTOR FAILS TO MAINTAIN THE WORKING AND FINAL RECORD DRAWINGS AS SPECIFIED HEREIN, THE CONTRACTING OFFICER WILL DEDUCT FROM THE MONTHLY PROGRESS PAYMENT AN AMOUNT REPRESENTING THE ESTIMATED COST OF MAINTAINING THE RECORD DRAWINGS. THIS MONTHLY DEDUCTION WILL CONTINUE UNTIL AN AGREEMENT CAN BE REACHED BETWEEN THE CONTRACTING OFFICER AND THE CONTRACTOR REGARDING THE ACCURACY AND COMPLETENESS OF UPDATED DRAWINGS. THE CONTRACTOR SHALL SHOW ON THE WORKING AND FINAL RECORD DRAWINGS, BUT NOT LIMITED TO, THE FOLLOWING INFORMATION:

   A. THE ACTUAL LOCATION (ELEVATION AND HORIZONTAL COORDINATES), MATERIALS AND SIZES OF ALL SUB-SURFACE UTILITY LINES. IN ORDER THAT THE LOCATION OF THESE LINES AND APPURTENANCES MAY BE DETERMINED IN THE EVENT THE SURFACE OPENINGS OR INDICATORS BECOME COVERED OVER OR OBSCURED, SHOW BY OFFSET DIMENSIONS TO TWO PERMANENTLY FIXED SURFACE FEATURES THE END OF EACH RUN INCLUDING EACH CHANGE IN DIRECTION ON THE RECORD DRAWINGS OR HORIZONTAL COORDINATES BASED ON THE SHIPYARD DATUM. LOCATE VALVES, FITTINGS, SPLICE BOXES AND SIMILAR APPURTENANCES BY DIMENSIONING ALONG THE UTILITY RUN FROM A REFERENCE POINT. ALSO, RECORD THE DEPTH BELOW THE SURFACE OF EACH RUN OF PIPE, FITTINGS, VALVES, ETC.

   B. 'THE LOCATION AND DIMENSIONS OF ANY CHANGES WITHIN THE BUILDING STRUCTURE.

   C. CORRECT GRADE, ELEVATIONS, CROSS SECTION, OR ALIGNMENT OF ROADS, EARTHWORK, STRUCTURES OR EXISTING AND NEW UTILITIES IF ANY CHANGES WERE MADE FROM CONTRACT PLANS.

   D. CHANGES IN DETAILS OF DESIGN OR ADDITIONAL INFORMATION OBTAINED FROM WORKING DRAWINGS SPECIFIED TO BE PREPARED AND/OR FURNISHED BY THE CONTRACTOR; INCLUDING BUT NOT LIMITED TO FABRICATION, ERECTION, INSTALLATION PLANS AND PLACING DETAILS, PIPE SIZES, INSULATION MATERIAL, DIMENSIONS OF EQUIPMENT FOUNDATIONS, ETC.

   E. THE TOPOGRAPHY, INVERT ELEVATIONS AND GRADES OF DRAINAGE INSTALLED OR AFFECTED AS PART OF THE PROJECT CONSTRUCTION.

   F. CHANGES OR MODIFICATIONS WHICH RESULT FROM THE FINAL INSPECTION.

   G. WHERE CONTRACT DRAWINGS OR SPECIFICATIONS PRESENT OPTIONS, SHOW ONLY THE OPTION SELECTED FOR CONSTRUCTION ON THE FINAL AS-BUILT PRINTS.

   H. SYSTEMS DESIGNED OR ENHANCED BY THE CONTRACTOR, SUCH AS HVAC CONTROLS, FIRE ALARM, FIRE SPRINKLER, AND IRRIGATION SYSTEMS.

   I. MODIFICATIONS (INCLUDE WITHIN MODIFICATION PRICING THE COST TO CHANGE WORKING AND FINAL RECORD DRAWINGS TO REFLECT MODIFICATIONS) AND COMPLIANCE WITH THE PROCEDURES SPECIFIED IN SECTION 01 78 00.00 22 CLOSEOUT SUBMITTALS.

   J. WHERE UTILITY LOCATIONS DIFFER FROM THOSE IDENTIFIED ON THE PLANS.

TRAFFIC NOTES:

1. THE CONTRACTOR SHALL BE RESPONSIBLE FOR MAINTAINING TRAFFIC FLOW DURING THE CONSTRUCTION.

2. THE CONTRACTOR SHALL BE RESPONSIBLE FOR MAINTAINING TRAFFIC FLOW DURING THE PROGRESS OF THE WORK. A DETAILED TRAFFIC CONTROL PLAN SHALL BE SUBMITTED FOR REVIEW AND APPROVAL PRIOR TO CONSTRUCTION. THE TRAFFIC CONTROL PLAN SHALL CONSIDER ALL AFFECTED PORTSMOUTH SHIPYARD OPERATIONS. THE CONTRACTOR SHALL UPDATE THE TRAFFIC CONTROL PLAN AS REQUIRED DURING THE PROJECT.

3. THE CONTRACTOR SHALL BE RESPONSIBLE FOR MAINTAINING EXISTING TRAFFIC CONTROL SIGNAGE AND INFORMATIONAL SIGNS DURING THE PROCESS OF WORK.

4. TRAFFIC CONTROL DEVICES SHALL BE PROVIDED BY THE CONTRACTOR.

5. THE CONTRACTOR SHALL PROVIDE POST MOUNTED AND WALL MOUNTED TRAFFIC CONTROL AND INFORMATION SIGNS IN ACCORDANCE WITH THE MANUAL ON UNIFORM TRAFFIC CONTROL DEVICES FOR STREETS AND HIGHWAYS, AS PUBLISHED BY THE DEPARTMENT OF COMMERCE.

SYM	DESCRIPTION	DATE	APPR
0	ISSUE OF BID DOCUMENT	01/14/2016	JPC

COMMONWEALTH OF VIRGINIA
JOHN PATRICK CASTELVECCHI, JR.
Lic. No 043782
01-14-2016
PROFESSIONAL ENGINEER
SEAL

JV CASCO BAY ENGINEERING
CLD CONSULTING ENGINEERS
A/E INFO

APPROVED
FOR COMMANDER NAVFAC
ACTIVITY
SATISFACTORY TO DATE

DES A/E | DRW FP | CHK A/E
PM/DM ROGER ROY
BRANCH MANAGER NATHAN MAHER
FEAD/PM&E AMIN BAHROUR PM&E
FIRE PROTECTION X

DEPARTMENT OF THE NAVY
NAVAL FACILITIES ENGINEERING COMMAND
NAVAL FACILITIES ENGINEERING COMMAND ~ MID-ATLANTIC
PUBLIC WORKS DEPARTMENT - MAINE
NAVAL SHIPYARD - PORTSMOUTH, NH
PORTSMOUTH NAVAL SHIPYARD
KITTERY, MAINE
RMe REPAIR STEAM AND CONDENSATE CENTER LOOP, RM14-0206
NOTES

EPROJECT NO.: 1370674
CONSTR. CONTR. NO. N40085-##-###-####
NAVFAC DRAWING NO. 12706394
SHEET 2 OF 31
G-002 MS-15-XXX

DRAWFORM REVISION: 10 OCTOBER 2014

FILE NAME: \\bmcd\dfs\Clients\ANF\USNavy\MidAt\85860_PNSYFY16UEM\Design\Mech\Sheets\1 - RM 14-0206 - Repair Steam and Condensate Center Loop\G002.dwg LAYOUT NAME: G002 PLOTTED: Monday, January 11, 2016 - 4:30pm USER: jrodriguez

MINIMUM PHASING REQUIREMENTS

PHASE 1: WORK TO BE COMPLETED WITHIN 60 CALENDAR DAYS.
MH 352 TO MH 356 AND MH 359B TO MH 358

PHASE 2: WORK TO BE COMPLETED WITHIN 60 CALENDAR DAYS.
MH 356 TO MH 358

NOTES:
1. IDENTIFIED AREAS OF WORK SHALL BE PERFORMED WITHIN THE ALLOTTED NUMBER OF DAYS DESCRIBED ABOVE. THE LIMITS AND DURATION OF EACH PHASE ARE INTENDED TO COORDINATE WITH ANTICIPATED CONCURRENT SHIPYARD ACTIVITIES WHICH ARE SUBJECT TO CHANGE. THE EXACT TIMING, SEQUENCING, AND LIMITS OF EACH PHASE OF WORK SHALL BE COORDINATED WITH THE CONTRACTING OFFICER.
2. CONTRACTOR SHALL PROVIDE TEMPORARY STEAM JUMPER BETWEEN THE BERTH 13 CROSS CONNECT NEAR MH 359B AND THE SERVICE TO BUILDING 277 FROM OCTOBER 15, 2016 THROUGH NOVEMBER 30, 2016.

GENERAL SHEET NOTES

1. SEE SHEET G001 FOR LEGEND AND G002 FOR GENERAL NOTES.
2. PROVIDE QUALIFIED FLAGGERS TO CONTROL ONE WAY ALTERNATING TRAFFIC WHEN CONSTRUCTION ACTIVITIES REDUCE TRAFFIC TO LESS THAN TWO WAY TRAFFIC.
3. TEMPORARY STAGING AND STOCKPILE AREA AVAILABILITY, SIZE, AND QUANTITY ARE LIMITED AND NOT GUARANTEED. CONTRACTOR SHALL OBTAIN WRITTEN APPROVAL FROM CONTRACTING OFFICER FOR ALL STAGING AREAS, SUCH APPROVAL IS REQUIRED PRIOR TO USE. PLAN ON MIMIMUM OF 21 DAYS AFTER AN OFFICIAL REQUEST HAS BEEN SUBMITTED WITH THE CONTRACTING OFFICER.
4. WORK SHALL BE COMPLETED IN A PHASED MANNER WITHIN THE IDENTIFIED PHASE LIMITS. INTENT IS THAT ALL WORK IN EACH PHASE IS COMPLETED TO INCLUDE TESTING AND TRENCH AND SITE RESTORATION WITHIN EACH PHASE PRIOR TO PROCEEDING TO THE NEXT PHASE. THE START AND STOP DATE OF EACH PHASE ARE APPROXIMATE AND BASED UPON ANTICIPATED FUTURE SHIPYARD ACTIVITIES AS OF DECEMBER 2015. COORDINATE FINAL SCHEDULE WITH CONTRACTING OFFICER.

☐ KEYNOTES

1. BUILDING 291 ENERGY PROJECT (BY OTHERS) STAGING AREA. THIS AREA WILL BE USED BY OTHERS FOR DURATION OF THIS PROJECT. COORDINATE ACCESS WITHIN THIS AREA WITH THE B291 CONTRACTOR. SUCH ACCESS SHALL INCLUDE ALL COSTS FOR RELOCATION/RESTORATION OF PERIMETER CONSTRUCTION FENCING.
2. TEMPORARY STAGING AREA USED BY B291 ENERGY PROJECT. COORDINATE ACCESS TO AND USE OF THIS AREA WITH THAT PROJECT.
3. TEMPORARY STAGING AREA THAT MAY BE AVAILABLE DURING A PORTION OF THE PHASE 1 WORK.
4. PHASE AND COORDINATE WORK IS SUCH A MANNER TO MAINTAIN A MIMIMUM 20 FOOT WIDE VEHICULAR LANE THROUGH THE CONSTRUCTION ACTIVITIES WITHIN THE VICINITY OF THE IDENTIFIED AREA.
5. NORTHWESTERLY CORNER OF THIS EXISTING BUILDING ENCROACHES OVER THE EXISTING UTILITY TRENCH APPROXIMATELY AS SHOWN.
6. POSSIBLE STAGING AREA FOR PHASE 1 ONLY, VERIFY AVAILABILITY AND COORDINATE ACCESS WITH PWD-ME CONSTRUCTION OFFICER.

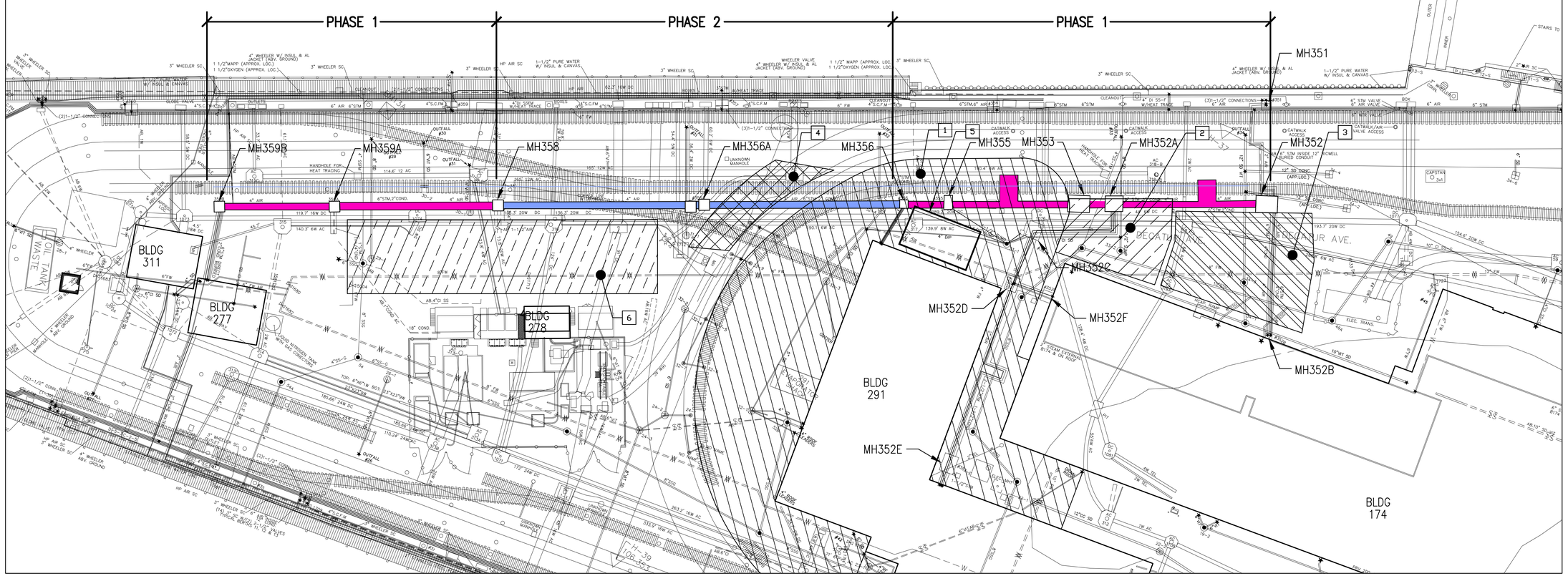

SITE PLAN
SCALE: 1" = 30'

PLAN NORTH

GRAPHIC SCALE
1" = 30' 30 15 0 30 60 90
scale feet
CHECK GRAPHIC SCALE BEFORE USING

SYM	DESCRIPTION	DATE	APPR
0	ISSUE OF BID DOCUMENT	1/14/2016	RHR

NAVFAC

SEAL

A/E INFO

APPROVED

FOR COMMANDER NAVFAC

ACTIVITY

SATISFACTORY TO DATE

DES A/E DRW FP CHK A/E

PM/DM XXX

BRANCH MANAGER

FEAD/PM&E

FIRE PROTECTION X

DEPARTMENT OF THE NAVY
NAVAL FACILITIES ENGINEERING COMMAND
PUBLIC WORKS DEPARTMENT - MAINE
NAVAL FACILITIES ENGINEERING COMMAND ~ MID-ATLANTIC
NAVAL SHIPYARD - PORTSMOUTH, NH
KITTERY, MAINE
PORTSMOUTH NAVAL SHIPYARD

RMe REPAIR STEAM AND CONDENSATE CENTER LOOP, RM14-0206

PHASING, STAGING/STOCKPILE, & TRAFFIC PLAN

EPROJECT NO.: 1370674

CONSTR. CONTR. NO. N40085-##-##-####

NAVFAC DRAWING NO. T.B.D

SHEET 1 OF #

G003 – – –

DRAWFORM REVISION: 10 OCTOBER 2014

FILE NAME: P:\Data\PROJECTS\2015 Proj\15-058 NAVFAC TO-1\Dwg\CIVIL\2016 Project Update Drawings\Center Loop\G-003 1-11-16.dwg LAYOUT NAME: G-003 PLOTTED: Friday, January 15, 2016 - 11:33am USER: Tony

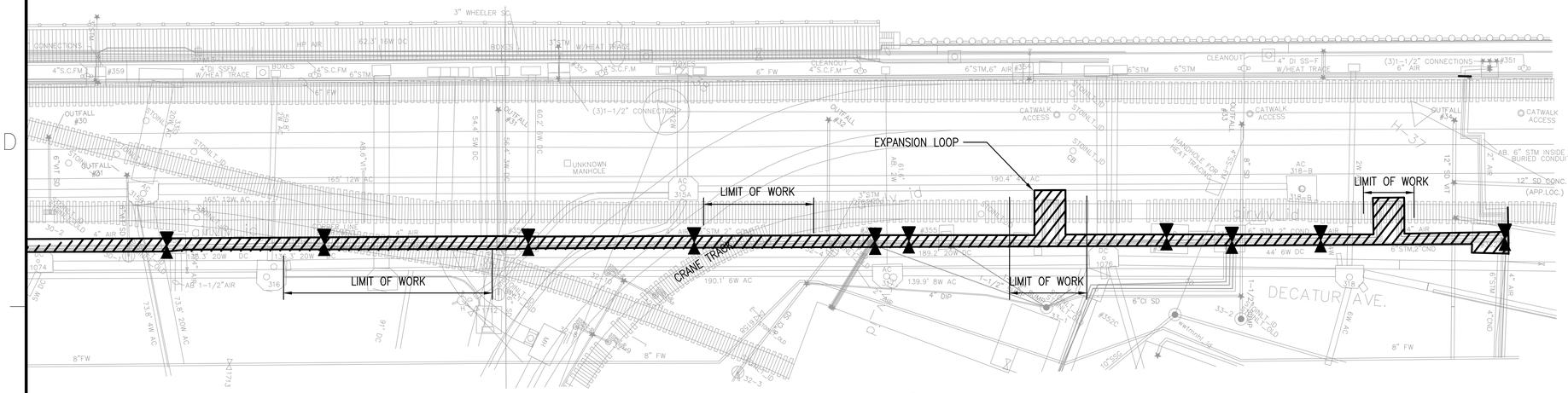

PLAN - CENTER LOOP AREA

SCALE: 1"=20'

PLAN NORTH

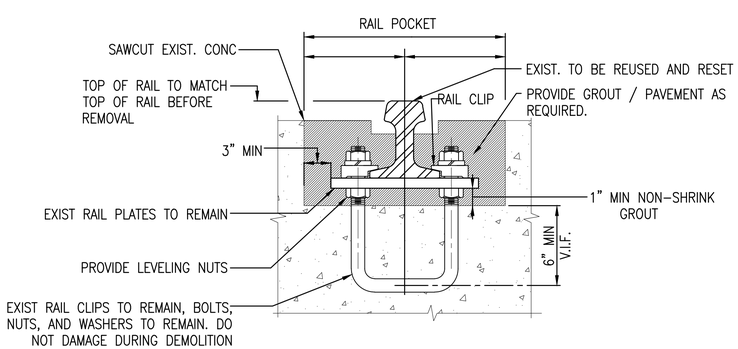

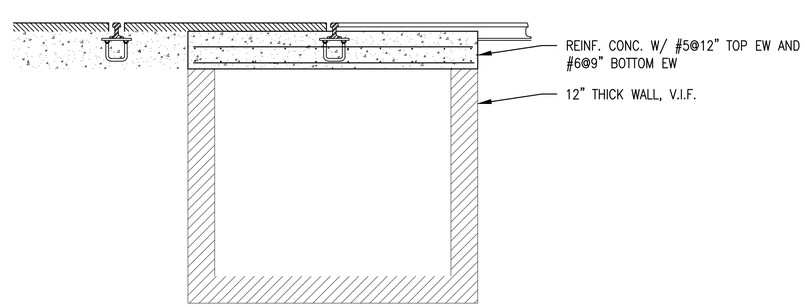

SITE PLAN

SCALE: 1" = 40'

PLAN NORTH

GENERAL SHEET NOTES

1. SEE SHEET G001 FOR LEGEND AND G002 FOR GENERAL NOTES.
2. CONTRACTOR SHALL FEED / INSERT COMPRESSED AIR PIPES BENEATH EXISTING RAILS W/O DISTURBING RAILS AND SUPPORTING TRENCHES WHENEVER POSSIBLE, BASED ON RAIL & TRENCH CONFIGURATION, LAYOUT, AND ACCESS FOR INSTALLATION OF PIPE SUPPORTS WHERE RAILS AND TRENCH COVERS ARE REMOVED. WHERE RAIL IS TO BE DISTURBED, REFERENCE REMOVAL NOTES AND NEW WORK NOTES BELOW.
3. CONTRACTOR TO VERIFY RAIL SECTIONS AND JOINT LOCATIONS OF EXISTING RAIL.

REMOVAL NOTES

1. CONTRACTOR SHALL REMOVE & DISPOSE OF EXISTING CONCRETE, PAVING, AND FILL AT RAIL TRACKS WITHOUT DAMAGING RAIL ANCHOR PLATES AND DISTURBING RAIL TRACKS.
2. SHORE ALL RAIL TRACKS AS REQUIRED TO MAINTAIN ALIGNMENT AND ELEVATION DURING TRENCH RECONSTRUCTION WORK.

NEW WORK NOTES

1. PROVIDE TIGHT BOLTED JOINTS IN ACCORDANCE WITH AISC MANUAL OF STEEL CONSTRUCTION, PART 1.
2. PROVIDE MECHANICAL PIPING PER MECHANICAL DRAWINGS.
3. PROVIDE NEW TRENCH COVERS FOR RAIL POCKETS AT LOCATIONS OF MECHANICAL PIPING REPLACEMENT AS NEEDED.
4. REATTACH RAIL TRACKS, TIES, AND ANCHORS.
5. EXISTING RAIL PLATES SHALL BE SANDBLASTED TO "NEAR WHITE METAL"

STM	DESCRIPTION	DATE	APPR
0	ISSUE OF BID DOCUMENT	01/14/2016	ED

NAVFAC

STATE OF MAINE — ERIC DUBE No. 12630 — LICENSED PROFESSIONAL ENGINEER — SEAL

JV CASCO BAY ENGINEERING CONSULTING ENGINEERS

APPROVED

FOR COMMANDER NAVFAC

ACTIVITY

SATISFACTORY TO DATE

DES A/E | DRW FP | CHK A/E

PM/DM XXX

BRANCH MANAGER

FEAD/PM&E

FIRE PROTECTION X

DEPARTMENT OF THE NAVY
NAVAL FACILITIES ENGINEERING COMMAND
PUBLIC WORKS DEPARTMENT – MAINE
PORTSMOUTH NAVAL SHIPYARD

NAVAL FACILITIES ENGINEERING COMMAND
NAVAL SHIPYARD – PORTSMOUTH, NH
KITTERY, MAINE

RMe REPAIR STEAM AND CONDENSATE
CENTER LOOP, RM14-0206

RAIL REMOVAL AND REINSTALLATION

EPROJECT NO.: 1370674

CONSTR. CONTR. NO. N40085-##-##-####

NAVFAC DRAWING NO. 12706396

SHEET 5 OF ##

C-100 | MS-15-XXX

DRAWFORM REVISION: 10 OCTOBER 2014

FILE NAME: P:\Data\PROJECTS\2015 Proj\15-058 NAVFAC TO-1\Dwg\CIVIL\2016 Project Update Drawings\Center Loop\C100 CL 1-14-16.dwg LAYOUT NAME: C100 PLOTTED: Friday, January 15, 2016 – 11:33am USER: Tony

GENERAL CIVIL NOTES:

1. STRUCTURAL DESIGN COMPLIES WITH THE REQUIREMENTS OF:

A. 2012 INTERNATIONAL BUILDING CODE.

B. UFC 1–200–01, GENERAL BUILDING REQUIREMENTS, 1 JULY 2013, WITH CHANGE 1, 1 SEPTEMBER 2013.

C. UFC 3–301–01, STRUCTURAL ENGINEERING, 1 JUNE 2013, WITH CHANGE 1,15 MAY 2014.

2. ALL DIMENSIONS, ELEVATIONS AND CONDITIONS SHALL BE VERIFIED IN THE FIELD. ANY DISCREPANCIES SHALL BE BROUGHT TO THE ATTENTION OF THE CONTRACTING OFFICER BEFORE ORDERING MATERIALS AND PROCEEDING WITH THE AFFECTED PART OF THE WORK.

3. TAKE ALL NECESSARY PRECAUTIONS TO PROTECT EXISTING UTILITIES AND MAINTAIN UNINTERRUPTED SERVICE. ANY DAMAGE INCURRED SHALL BE REPAIRED IMMEDIATELY AT THE CONTRACTOR'S EXPENSE TO THE SATISFACTION OF THE CONTRACTING OFFICER. NOTIFY THE CONTRACTING OFFICER A MINIMUM OF 15 DAYS IN ADVANCE OF ANY OUTAGES.

4. IT IS THE CONTRACTOR'S SOLE RESPONSIBILITY TO DETERMINE ERECTION PROCEDURES AND SEQUENCE TO ENSURE THE SAFETY OF THE FACILITIES AND THEIR COMPONENTS DURING DEMOLITION AND ERECTION UNLESS OTHERWISE DIRECTED. THIS INCLUDES THE ADDITION OF NECESSARY SHORING, SHEETING, TEMPORARY BRACING, GUYS OR TIE DOWNS. SUCH MATERIAL SHALL REMAIN THE PROPERTY OF THE CONTRACTOR AFTER THE COMPLETION OF THE PROJECTS.

5 METHODS OF DEMOLITION, CONSTRUCTION, AND ERECTION ARE THE CONTRACTOR'S RESPONSIBILITY UNLESS OTHERWISE SPECIFIED.

6. IT IS THE CONTRACTOR'S RESPONSIBILITY TO PROVIDE AND MAINTAIN ENVIRONMENTAL CONTROLS AS REQUIRED BY FEDERAL, STATE AND LOCAL REGULATIONS AND PERMITS. ENVIRONMENTAL CONTROLS SHALL INCLUDE BUT NOT BE LIMITED TO TURBIDITY, PH AND DUST. PROPER EROSION CONTROL MEASURES SHALL BE IN PLACE PRIOR TO CONSTRUCTION AND SHALL BE MAINTAINED THROUGH SITE STABILIZATION. CONSTRUCTION ACTIVITIES SHALL BE CONDUCTED IN ACCORDANCE WITH MAINE'S BEST MANAGEMENT PRACTICES FOR EROSION AND SEDIMENT CONTROL

7. ALL APPLICABLE FEDERAL, STATE AND LOCAL REGULATIONS AND PERMITS SHALL BE FOLLOWED, INCLUDING THE FEDERAL DEPARTMENT OF LABOR, OCCUPATIONAL SAFETY AND HEALTH ACT, US ARMY CORPS OF ENGINEERS, AND STATE/LOCAL WETLAND CONTROL.

ABBREVIATION:

AB	ANCHOR BOLT
ADDL	ADDITIONAL
ARCH	ARCHITECT
&	AND
BLDG	BUILDING
BM	BEAM
BOT	BOTTOM
BRG	BEARING
BTWN	BETWEEN
CIP	CAST–IN–PLACE CONCRETE
CJ	CONTROL JOINT
CL	CENTERLINE
CLR	CLEAR
CNJ	CONSTRUCTION JOINT
COL	COLUMN
CONC	CONCRETE
CONN	CONNECTION
CONT	CONTINUOUS
CONTR	CONTRACTOR
CY	CUBIC YARD
DIA	DIAMETER
DIM	DIMENSION
DISCONT	DISCONTINUOUS
DWG	DRAWING
(E), EX, EXIST	EXISTING
EA	EACH
EF	EACH FACE
EL, ELEV	ELEVATION
EQ	EQUAL
EQUIP	EQUIPMENT
ES	EACH SIDE
EW	EACH WAY
EXP	EXPANSION
EXT	EXTERIOR
FLG	FLANGE
FV	FIELD VERIFY
HOR, HORIZ	HORIZONTAL
HSS	HOLLOW STRUCTURAL SHAPE
HT	HEIGHT
IF	INSIDE FACE
IN	INCH
INFO	INFORMATION
JT	JOINT
K	KIP (1 KIP = 1,000 LBS)
KSI	KIPS PER SQUARE INCH
L	ANGLE
LL	DOUBLE ANGLE
LB	POUND
LF	LINEAR FOOT
LLH	LONG LEG HORIZONTAL
LLV	LONG LEG VERTICAL
MAX	MAXIMUM
MECH	MECHANICAL
MFR	MANUFACTURER
MIN	MINIMUM
MISC	MISCELLANEOUS
NF	NEAR FACE
NO	NUMBER
NS	NEAR SIDE
NTS	NOT TO SCALE
OC	ON CENTER
OF	OUTSIDE FACE
OPNG	OPENING
OPP	OPPOSITE
P	PIER DESIGNATION
PL	PLATE
PREFAB	PREFABRICATED
PSF	POUNDS PER SQUARE FOOT
PSI	POUNDS PER SQUARE INCH
REQ, REQD	REQUIRED
SECT	SECTION
SIM	SIMILAR
SPAC	SPACING
SPECS	SPECIFICATIONS
STD	STANDARD
STL	STEEL
STR	STRAIGHT
STRUCT	STRUCTURAL
T	TOP
T&B	TOP AND BOTTOM
TOC, T/CONC	TOP OF CONCRETE
T/FTG, TOF	TOP OF FOOTING
TEMP	TEMPERATURE
TYP	TYPICAL
UNO	UNLESS NOTED OTHERWISE
VER, VERT	VERTICAL
VIF	VERIFY IN FIELD
w/	WITH
w/O	WITHOUT
WT	WEIGHT

GENERAL SHEET NOTES

1. SEE SHEET G001 FOR LEGEND AND G002 FOR GENERAL NOTES.

SYM	DESCRIPTION	DATE	APPR
0	ISSUE OF BID DOCUMENT	1/14/2016	ED

NAVFAC

STATE OF MAINE
ERIC DUBE
No. 12630
LICENSED
PROFESSIONAL ENGINEER
SEAL

JV
CASCO BAY ENGINEERING
CONSULTING ENGINEERS

APPROVED
FOR COMMANDER NAVFAC
ACTIVITY
SATISFACTORY TO DATE

DES A/E | DRW FP | CHK A/E
PM/DM XXX
BRANCH MANAGER
FEAD/PM&E
FIRE PROTECTION X

DEPARTMENT OF THE NAVY
NAVAL FACILITIES ENGINEERING COMMAND
PUBLIC WORKS DEPARTMENT – MAINE
NAVAL FACILITIES ENGINEERING COMMAND ~ MID-ATLANTIC
NAVAL SHIPYARD – PORTSMOUTH, NH
PORTSMOUTH NAVAL SHIPYARD – KITTERY, MAINE

RMe REPAIR STEAM AND CONDENSATE CENTER LOOP, RM14–0206

CIVIL NOTES

EPROJECT NO.: 1370674
CONSTR. CONTR. NO. N40085–##–##–####
NAVFAC DRAWING NO. 12706397
SHEET 4 OF ##
C-001 | MS-15-NUM

DRAWFORM REVISION: 10 OCTOBER 2014

FILE NAME: P:\Data\PROJECTS\2015 Proj\15-058 NAVFAC TO-1\Dwg\CIVIL\2016 Project Update Drawings\Center Loop\C101-102 CL 1-06-16.dwg LAYOUT NAME: C001 PLOTTED: Friday, January 15, 2016 – 11:34am USER: Tony

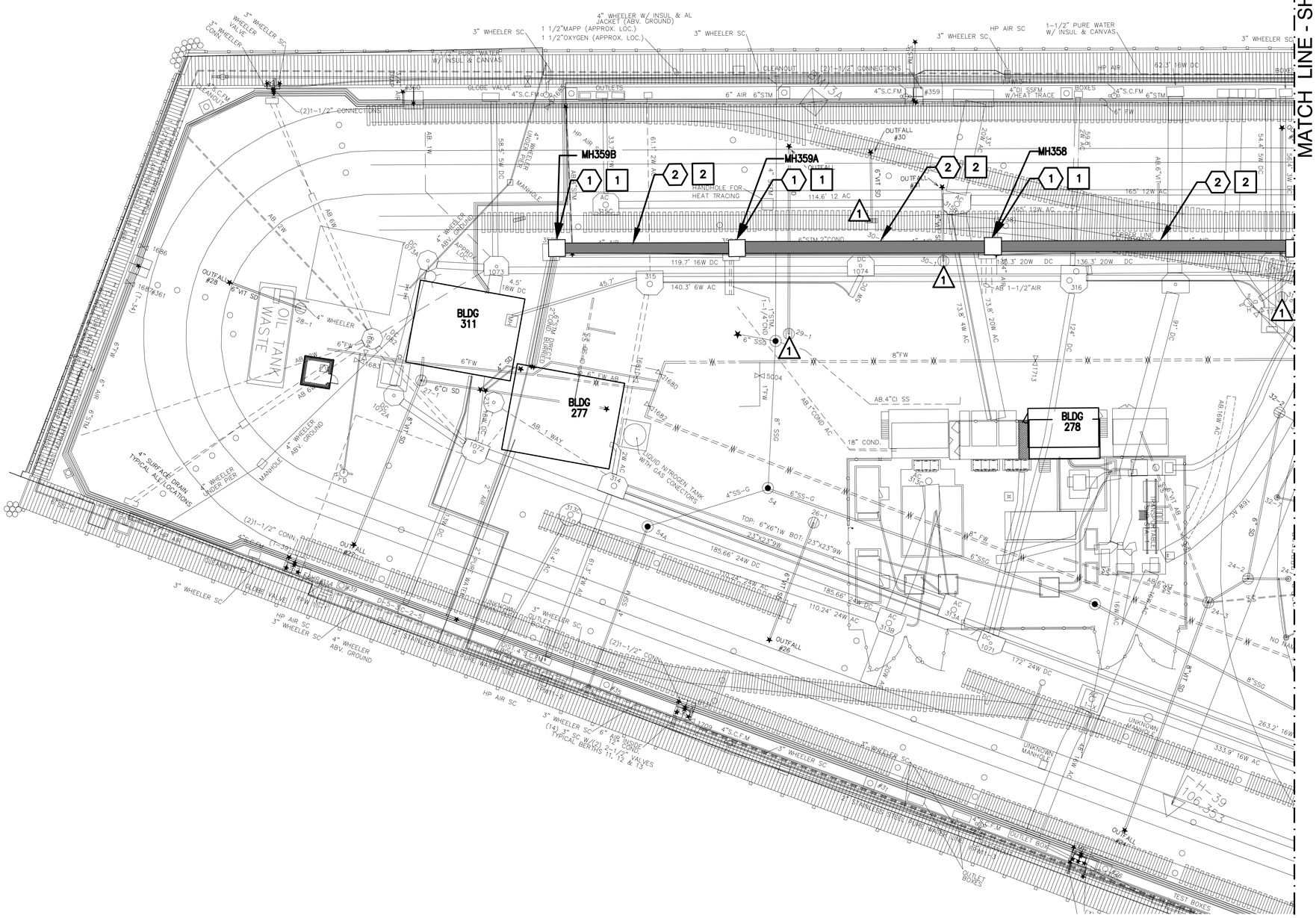

SITE PLAN

SCALE: 1" = 40'

PLAN NORTH

GENERAL SHEET NOTES

1. SEE SHEET G001 FOR LEGEND AND G002 FOR GENERAL NOTES.
2. ALL PAVEMENT RESTORATION SHALL CONFORM TO DETAIL 1/C-401

LEGEND

EXISTING MH COVER

REINSTALL EXIST. TRENCH COVER, NEW ASPHALT

DEMOLITION KEYNOTES

1. REMOVE EXISTING MANHOLE FRAME AND COVER
2. SAWCUT AND REMOVE EXISTING ASPHALT PAVEMENT AND EXISTING TRENCH COVER. SEE C100 FOR TRACK REMOVAL DETAILS AS REQUIRED

NEW WORK KEYNOTES

1. REINSTALL EXISTING MH FRAME AND COVER. SEE DETAILS 1&3/C401 AND 1&2/C402
2. RESEAL JOINTS AND REINSTALL EXISTING TRENCH COVERS. PROVIDE NEW ASPHALT PAVEMENT AS SHOWN. 1&2/C401 AND 1&2/C402. SEE C100 FOR TRACK REMOVAL DETAILS AS REQUIRED

* RESEAL JOINTS AND REINSTALL EXISTING TRENCH COVERS.

EROSION CONTROL

1. ADD TEMPORARY SILT SACKS AT ADJACENT STORMWATER CATCH BASINS DURING CONSTRUCTION. TYP.

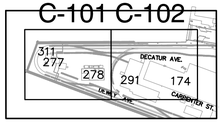

KEYPLAN

SCALE: N.T.S.

GRAPHIC SCALE

1" = 40' 40 20 0 40 80 120 scale feet

CHECK GRAPHIC SCALE BEFORE USING

SYM	DESCRIPTION	DATE	APPR
0	ISSUE OF BID DOCUMENT	1/14/2016	ED

NAVFAC

STATE OF MAINE ERIC DUBE No. 12630 LICENSED PROFESSIONAL ENGINEER

SEAL

JV CASCO BAY ENGINEERING CLD CONSULTING ENGINEERS

APPROVED

FOR COMMANDER NAVFAC

ACTIVITY

SATISFACTORY TO DATE

DES A/E DRW FP CHK A/E

PM/DM XXX

BRANCH MANAGER

FEAD/PM&E

FIRE PROTECTION X

DEPARTMENT OF THE NAVY
NAVAL FACILITIES ENGINEERING COMMAND
PUBLIC WORKS DEPARTMENT - MAINE
NAVAL FACILITIES ENGINEERING COMMAND ~ MID-ATLANTIC
NAVAL SHIPYARD - PORTSMOUTH, NH
PORTSMOUTH NAVAL SHIPYARD KITTERY, MAINE

RMe REPAIR STEAM AND CONDENSATE CENTER LOOP, RM14-0206

TRENCH AND TRENCH COVER PLAN

EPROJECT NO.: 1370674

CONSTR. CONTR. NO. N40085-##-##-####

NAVFAC DRAWING NO. 12706397

SHEET 6 OF ##

C-101 MS-15-NUM

DRAWFORM REVISION: 10 OCTOBER 2014

FILE NAME: P:\Data\PROJECTS\2015 Proj\15-058 NAVFAC TO-1\Dwg\CIVIL\2016 Project Update Drawings\Center Loop\C101-102 CL 1-06-16.dwg LAYOUT NAME: C101 PLOTTED: Friday, January 15, 2016 - 11:34am USER: Tony

MATCH LINE - SHEET C101

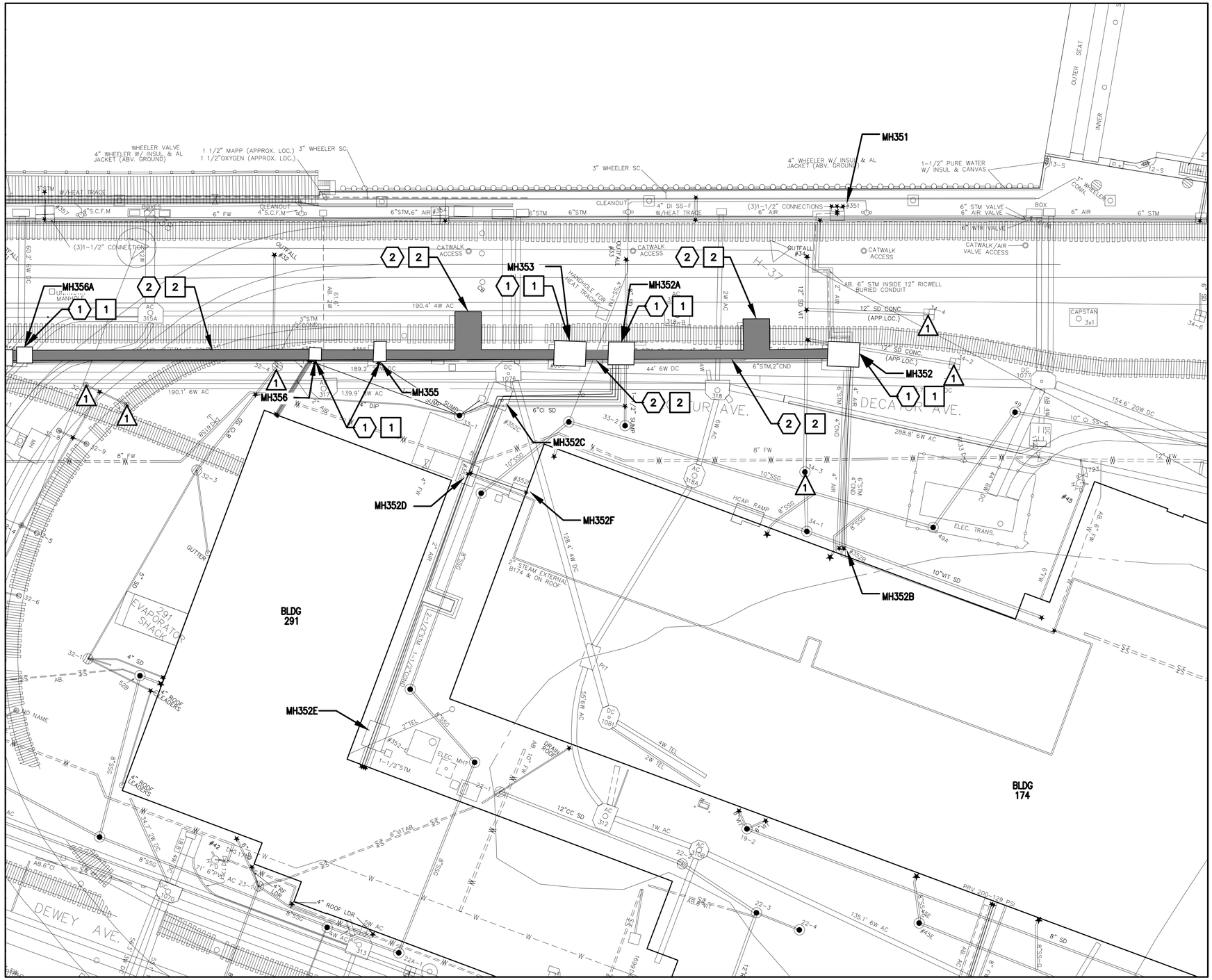

SITE PLAN
SCALE: 1" = 40'

PLAN NORTH

GENERAL SHEET NOTES

1. SEE SHEET G001 FOR LEGEND AND G002 FOR GENERAL NOTES.
2. ALL PAVEMENT RESTORATION SHALL CONFORM TO DETAIL 1/C-401

LEGEND

EXISTING MH COVER

REINSTALL EXIST. TRENCH COVER, NEW ASPHALT

DEMOLITION KEYNOTES

1. REMOVE EXISTING MANHOLE FRAME AND COVER
2. SAWCUT AND REMOVE EXISTING ASPHALT PAVEMENT AND EXISTING TRENCH COVER. SEE C100 FOR TRACK REMOVAL DETAILS AS REQUIRED

NEW WORK KEYNOTES

1. REINSTALL EXISTING MH FRAME AND COVER. SEE DETAILS 1&3/C401 AND 1&2/C402
2. RESEAL JOINTS AND REINSTALL EXISTING TRENCH COVERS. PROVIDE NEW ASPHALT PAVEMENT AS SHOWN. 1&2/C401 AND 1&2/C402. SEE C100 FOR TRACK REMOVAL DETAILS AS REQUIRED

* RESEAL JOINTS AND REINSTALL EXISTING TRENCH COVERS.

EROSION CONTROL

1. ADD TEMPORARY SILT SACKS AT ADJACENT STORMWATER CATCH BASINS DURING CONSTRUCTION. TYP.

C-101 C-102

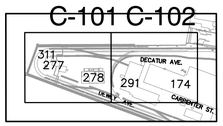

KEYPLAN
SCALE: N.T.S.

GRAPHIC SCALE

1" = 40'
40 20 0 40 80 120
scale feet
CHECK GRAPHIC SCALE BEFORE USING

SYM	DESCRIPTION	DATE	APPR
0	ISSUE OF BID DOCUMENT	1/14/2016	ED

NAVFAC

STATE OF MAINE
ERIC DUBE
No. 12630
LICENSED
PROFESSIONAL ENGINEER
SEAL

JV
CASCO BAY ENGINEERING
CONSULTING ENGINEERS

APPROVED
FOR COMMANDER NAVFAC
ACTIVITY
SATISFACTORY TO DATE
DES A/E DRW FP CHK A/E
PM/DM XXX
BRANCH MANAGER
FEAD/PM&E
FIRE PROTECTION X

DEPARTMENT OF THE NAVY
NAVAL FACILITIES ENGINEERING COMMAND
PUBLIC WORKS DEPARTMENT - MAINE
NAVAL FACILITIES ENGINEERING COMMAND ~ MID-ATLANTIC
NAVAL SHIPYARD - PORTSMOUTH, NH
PORTSMOUTH NAVAL SHIPYARD
KITTERY, MAINE

RMe REPAIR STEAM AND CONDENSATE CENTER LOOP, RM14-0206

TRENCH AND TRENCH COVER PLAN

EPROJECT NO.: 1370674
CONSTR. CONTR. NO. N40085-##-##-####
NAVFAC DRAWING NO. 12706398
SHEET 7 OF ##
C-102 MS-15-NUM

DRAWFORM REVISION: 10 OCTOBER 2014

FILE NAME: P:\Data\PROJECTS\2015 Proj\15-058 NAVFAC TO-1\Dwg\CIVIL\2016 Project Update Drawings\Center Loop\C101-102 CL 1-06-16.dwg LAYOUT NAME: C102 PLOTTED: Friday, January 15, 2016 - 11:34am USER: Tony

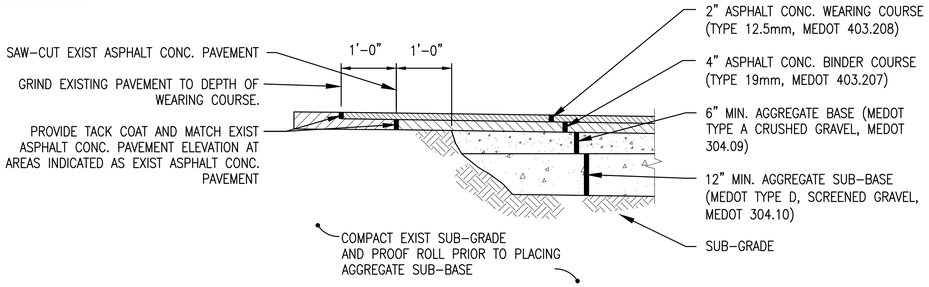

TYPICAL ASPHALT CONCRETE PAVEMENT NOTES:

1. PROVIDE AND CONSTRUCT HOT MIX ASPHALT IN ACCORDANCE WITH MEDOT STANDARD SPECIFICATIONS, DIVISION 400 – PAVEMENTS.
2. PROVIDE AND CONSTRUCT SUB-BASE AND BASE MATERIALS IN ACCORDANCE WITH MEDOT STANDARD SPECIFICATIONS, DIVISION 300 – BASES.
3. MATERIALS SHALL COMPLY WITH APPLICABLE SECTIONS OF MEDOT SPECIFICATIONS DIVISION 700 – MATERIALS.

1 TYPICAL ASPHALT CONCRETE PAVEMENT DETAIL-CIA

NTS

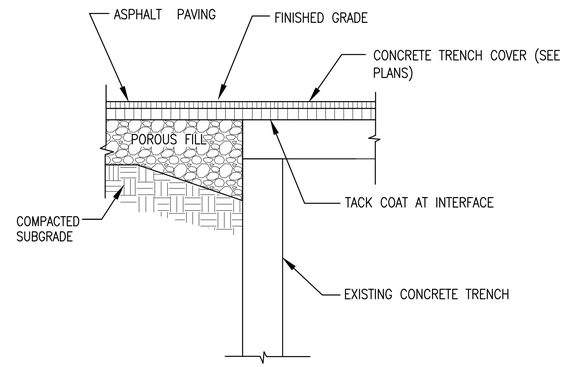

2 NEW ASPHALT AND PAVING SECTION OVER EXIST VAULT AND TRENCH COVERS

NTS

GENERAL SHEET NOTES

1. SEE SHEET G001 FOR LEGEND AND G002 FOR GENERAL NOTES.
2. REFER TO CIVIL NOTES ON SHEET C-001 FOR ADDITIONAL INFORMATION.

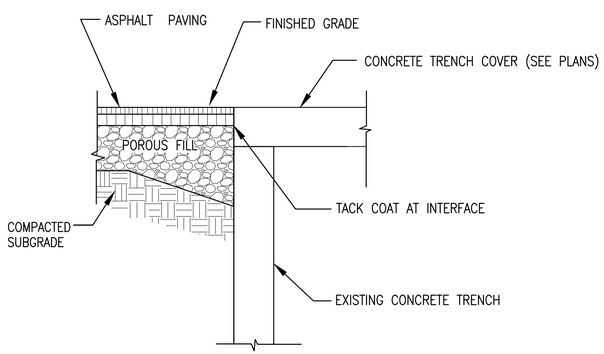

3 NEW ASPHALT AND PAVING SECTION @ EXIST VAULT AND TRENCH COVERS

NTS

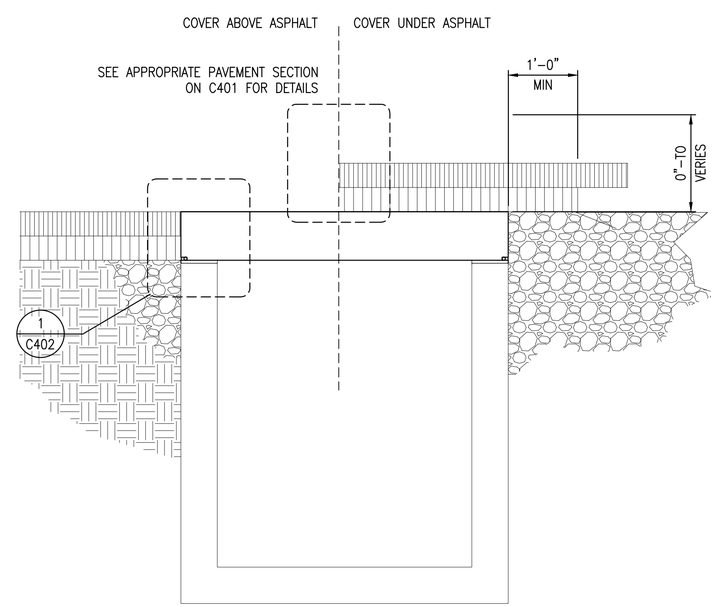

4 TYPICAL TRENCH COVER RE-INSTALL DETAIL

NTS

SYM	DESCRIPTION	DATE	APPR
0	ISSUE OF BID DOCUMENT	1/14/2016	ED

NAVFAC

STATE OF MAINE ERIC DUBE No. 12630 LICENSED PROFESSIONAL ENGINEER

SEAL

JV CASCO BAY ENGINEERING CLD CONSULTING ENGINEERS

APPROVED

FOR COMMANDER NAVFAC

ACTIVITY

SATISFACTORY TO DATE

DES A/E DRW FP CHK A/E

PM/DM XXX

BRANCH MANAGER

FEAD/PM&E

FIRE PROTECTION X

DEPARTMENT OF THE NAVY
NAVAL FACILITIES ENGINEERING COMMAND
PUBLIC WORKS DEPARTMENT – MAINE
NAVAL FACILITIES ENGINEERING COMMAND – MID-ATLANTIC
NAVAL SHIPYARD – PORTSMOUTH, NH
PORTSMOUTH NAVAL SHIPYARD KITTERY, MAINE

RMe REPAIR STEAM AND CONDENSATE CENTER LOOP, RM14-0206

DETAILS

EPROJECT NO.: 1370674

CONSTR. CONTR. NO. N40085-##-##-####

NAVFAC DRAWING NO. #######

SHEET 8 OF ##

C-401 MS-15-NUM

DRAWFORM REVISION: 10 OCTOBER 2014

FILE NAME: P:\Data\PROJECTS\2015 Proj\15-058 NAVFAC TO-1\Dwg\CIVIL\2016 Project Update Drawings\Center Loop\C400s CL 1-07-16.dwg LAYOUT NAME: C401 PLOTTED: Friday, January 15, 2016 - 11:35am USER: Tony

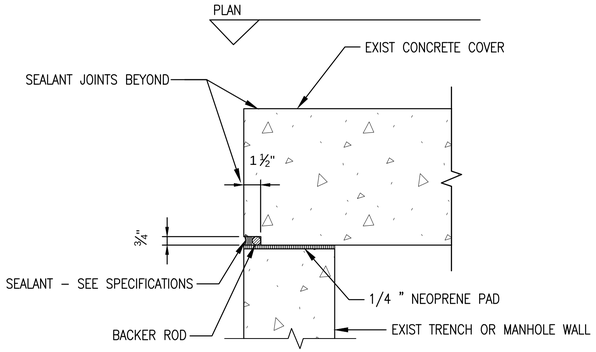

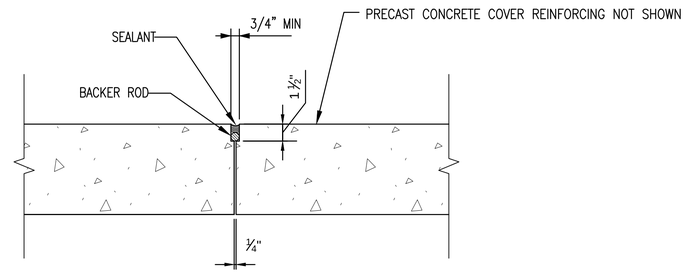

2 TYPICAL JOINT BETWEEN COVERS

NTS

NOTE: PROVIDE 4 LIFTING INSERTS PER 12" THICK COVER. PROVIDE 2 LIFTING INSERTS PER 8" THICK COVER. SEE DETAIL 4/C402

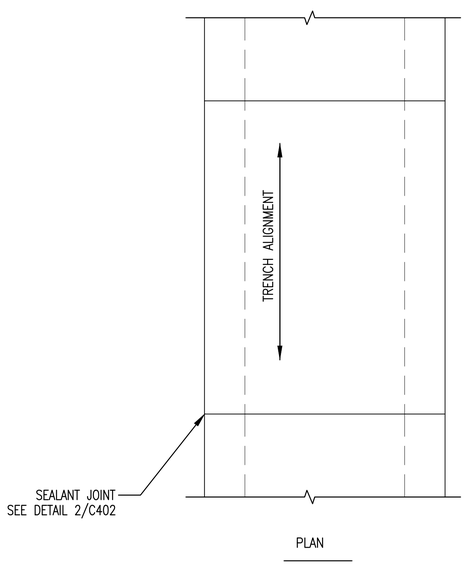

1 SEALANT JOINT DETAIL

NTS

GENERAL SHEET NOTES

1. SEE SHEET G001 FOR LEGEND AND G002 FOR GENERAL NOTES.
2. REFER TO CIVIL NOTES ON SHEET C-001 FOR ADDITIONAL INFORMATION.

SYM	DESCRIPTION	DATE	APPR
0	ISSUE OF BID DOCUMENT	1/14/2016	ED

NAVFAC

STATE OF MAINE
ERIC DUBE
No. 12630
LICENSED
PROFESSIONAL ENGINEER
SEAL

JV CASCO BAY ENGINEERING CLD CONSULTING ENGINEERS

APPROVED
FOR COMMANDER NAVFAC
ACTIVITY
SATISFACTORY TO DATE
DES A/E DRW FP CHK A/E
PM/DM XXX
BRANCH MANAGER
FEAD/PM&E
FIRE PROTECTION X

DEPARTMENT OF THE NAVY
NAVAL FACILITIES ENGINEERING COMMAND
PUBLIC WORKS DEPARTMENT – MAINE
NAVAL FACILITIES ENGINEERING COMMAND ~ MID-ATLANTIC
NAVAL SHIPYARD – PORTSMOUTH, NH
PORTSMOUTH NAVAL SHIPYARD KITTERY, MAINE
RMe REPAIR STEAM AND CONDENSATE
CENTER LOOP, RM14-0206
DETAILS

EPROJECT NO.: 1370674
CONSTR. CONTR. NO. N40085-##-##-####
NAVFAC DRAWING NO. #######
SHEET 9 OF ##
C-402 MS-15-NUM

DRAWFORM REVISION: 10 OCTOBER 2014

FILE NAME: P:\Data\PROJECTS\2015 Proj\15-058 NAVFAC TO-1\Dwg\CIVIL\2016 Project Update Drawings\Center Loop\C400s CL 1-07-16.dwg LAYOUT NAME: C402 PLOTTED: Friday, January 15, 2016 – 11:35am USER: Tony

EROSION CONTROL NOTES

A. GENERAL NOTES

DURING CONSTRUCTION, AND THEREAFTER, EROSION CONTROL MEASURES ARE TO BE IMPLEMENTED AS NOTED. THE SMALLEST PRACTICAL AREA OF LAND SHALL BE EXPOSED AT ONE TIME DURING CONSTRUCTION. WHEN LAND IS EXPOSED DURING DEVELOPMENT, THE EXPOSURE SHALL BE KEPT AT A MAXIMUM OF 30 DAYS.

EROSION AND SEDIMENT CONTROL PRACTICES INCLUDE THE USE OF THE FOLLOWING: SILT FENCE BARRIERS, TURF REINFORCEMENT MATTING, TEMPORARY CHECK DAMS, INLET PROTECTION, TEMPORARY CONSTRUCTION EXITS, TEMPORARY DIVERSION DIKES, SEDIMENT BASINS, AND PUMPED DISCHARGE SEDIMENT CONTROL DEVICES.

CONTRACTOR SHALL DESIGNATE AN ENVIRONMENTAL MANAGER WHO SHALL BE RESPONSIBLE FOR INSPECTING ALL INSTALLED EROSION CONTROL MEASURES, MONITORING THEIR EFFECTIVENESS, AND TO ASSESS RE-VEGETATION PROGRESS.

SUBMIT EROSION AND SEDIMENT CONTROL INSPECTION REPORTS TO THE CONTRACTING OFFICER ONCE EVERY 7 CALENDAR DAYS AND BEFORE AND AFTER (24 HOURS) A STORM EVENT PRIOR TO PERMANENT STABILIZATION. EROSION AND SEDIMENT CONTROL MEASURES REQUIRING MODIFICATION OR REPAIRS, OR IF ADDITIONAL MEASURES ARE DEEMED NECESSARY MUST BE COMPLETED WITHIN 7 DAYS AND PRIOR TO THE NEXT STORM EVENT.

THE PLACEMENT OF SEDIMENT BARRIERS SHALL BE COMPLETED IN ACCORDANCE WITH GUIDELINES ESTABLISHED BY MEDEP STANDARDS AND IN ACCORDANCE WITH THE EROSION CONTROL PLAN AND DETAILS HEREIN. EROSION CONTROL MEASURES SHALL CONFORM TO THE LATEST REVISION MAINE EROSION AND SEDIMENT CONTROL BMPS, PUBLISHED BY BUREAU OF LAND AND WATER QUALITY MAINE DEPARTMENT OF ENVIRONMENTAL PROTECTION.

CONTRACTOR SHALL PREPARE DETAILED SCHEDULE AND MARKED UP SITE PLAN INDICATING AREAS OF WORK AND DATES OF DISTURBANCE. EROSION CONTROL MEASURES SHALL REMAIN INSTALLED AND MAINTAINED UNTIL ALL EXPOSED SLOPES HAVE A MINIMUM 85% VIGOROUS PERENNIAL VEGETATIVE COVER. EROSION CONTROL MEASURES SHALL BE REMOVED WITHIN 30 DAYS OF PERMANENT VEGETATIVE STABILIZATION BEING ATTAINED.

CONTRACTOR SHALL INSTALL ADDITIONAL MEASURES TO CONTROL EROSION AS IS NECESSARY GIVEN SITE AND WEATHER CONDITIONS. SITE ENTRANCES AND ADJACENT ROADWAYS SHALL BE PERIODICALLY SWEPT TO MINIMIZE TRACKING OF SEDIMENT AND DEBRIS. ALL CATCH BASINS AND DRAINAGE INLETS SUBJECT TO RUNOFF FROM PROJECT SITE SHALL BE CLEANED AFTER THE SITE HAS BEEN FULLY STABILIZED.

KEEP DUST DOWN AT ALL TIMES, INCLUDING DURING NONWORKING PERIODS. SPRINKLE OR TREAT, WITH DUST SUPPRESSANTS, THE SOIL AT THE SITE, HAUL ROADS, AND OTHER AREAS DISTURBED BY OPERATIONS. DRY POWER BROOMING WILL NOT BE PERMITTED. INSTEAD, USE VACUUMING, WET MOPPING, WET SWEEPING, OR WET POWER BROOMING.

TEMPORARY VEGETATION SHALL BE ESTABLISHED ON DISTURBED AREAS NOT RECEIVING FINAL GRADING WITHIN 30 DAYS TO 1 YEAR. HAY BALES ARE NOT AN APPROPRIATE EROSION AND SEDIMENT CONTROL DEVICE FOR PNSY. AS SUCH, THEIR USE WILL NOT BE PERMITTED.

SOIL STOCKPILES SHALL BE MULCHED WITH HAY OR STRAW AT A RATE OF 75 LBS. PER 1000 S.F. OR WITH A 4" LAYER OF EROSION CONTROL MIX WITHIN 7 DAYS OF STOCKING. SMALL STOCKPILES SHALL BE COVERED WITH A TARP.

B. VEGETATIVE MEASURES

1. TOPSOIL STOCKPILING. TOPSOIL SHALL BE STRIPPED AND STOCKPILED FOR LATER USE ON CRITICAL AREAS AND ALL OTHER AREAS TO BE SEEDED. THE STOCKPILE SHALL NOT BE COMPACTED AND SHALL BE STABILIZED AGAINST EROSION WITH TEMPORARY SEEDING.

2. TEMPORARY SEEDING
   (A) BEDDING – REMOVE STONES AND TRASH THAT WILL INTERFERE WITH SEEDING THE AREA. WHERE FEASIBLE, TILL THE SOIL TO DEPTH OF ABOUT 3" TO PREPARE SEED BED AND MIX THE FERTILIZER INTO THE SOIL.

   (B) FERTILIZER – FERTILIZER SHALL BE UNIFORMLY SPREAD OVER THE AREA PRIOR TO BEING TILLED INTO THE SOIL. A 10–10–10 MIX OF FERTILIZER SHALL BE APPLIED AT A RATE OF 300 POUNDS PER ACRE (OR 7 POUNDS PER 1,000 SF)
   (C) SEED MIXTURE – USE ANY OF THE FOLLOWING IN UPLAND AREAS:

SEEDING RATE:

SPECIES	PER ACRE	PER 1,000 S.F.	DATES	DEPTH
WINTER RYE	112 LBS.	2.6 LBS.	8/15–10/1	1–1 ½ IN
OATS	80 LBS.	1.8 LBS.	4/1–7/1	1–1 ½ IN
ANNUAL GRASS	40 LBS.	0.9 LBS.	4/1–7/1	¼ IN
SUDAN GRASS	40 LBS.	0.9 LBS.	5/15–8/15	½–1 IN
PERENNIAL	40 LBS.	0.9 LBS.	8/15–9/15	¼ IN

(A) MULCHING – WHERE IT IS IMPRACTICAL TO INCORPORATE FERTILIZER AND SEED INTO MOIST SOIL, THE SEEDED AREA SHALL BE MULCHED TO FACILITATE GERMINATION. MULCH IN THE FORM OF HAY OR STRAW SHALL BE APPLIED AT A RATE OF 70 TO 90 LBS PER 1,000 SF

(B) INSPECTION – CONTRACTOR SHALL INSPECT THE SITE TWICE PER MONTH UNTIL A MINIMUM OF 85% OF THE AREA IS VEGETATED WITH VIGOROUS GROWTH.

C. STRUCTURAL MEASURES

SILT SCREEN FENCES: SILT SCREEN FENCES SHALL BE INSTALLED IN THE AREAS SHOWN ON THE DRAWINGS. THEY ARE INTENDED PRIMARILY TO INTERCEPT AND FILTER SMALL VOLUMES OF "SHEET FLOWING" RUNOFF, OR AS SEDIMENT TRAPS IN SMALL SWALES. SILT SCREEN FENCES WILL FUNCTION 6 MONTHS OR LONGER IF KEPT FREE OF SEDIMENT ACCUMULATIONS (SEE DETAILS FOR ADDITIONAL INFORMATION).

SWALES: TEMPORARY AND/OR PERMANENT SWALES SHALL BE INSTALLED AS SHOWN ON THE DRAWINGS. SWALES ARE USED TO CONVERT SHEET FLOW TO CHANNEL FLOW AND CONVEY THE RUNOFF TO A PERMANENT CHANNEL, STORM DRAIN, OR DETENTION/SEDIMENT STRUCTURE. SWALES ARE INTENDED TO INTERCEPT RUNOFF AND DIVERT IT FROM EXPOSED OR NEWLY SEEDED AREAS TOWARD AN ACCEPTABLE OUTLET (GRASS SWALES, SEDIMENTATION POND, ETC.) OR TO REDUCE THE VELOCITY OF RUNOFF FLOWING DOWN FROM A DRAINAGE AREA.

D. MAINTENANCE

DURING THE PERIOD OF CONSTRUCTION AND/OR UNTIL LONG TERM VEGETATION IS ESTABLISHED:

1. SEEDED AREAS SHALL BE FERTILIZED. MULCHED, AND SHALL BE SEEDED TO INSURE NEGATIVE ESTABLISHMENT.

2. ALL DIVERSION CHANNELS AND SWALES SHALL BE CHECKED WEEKLY AND REPAIRED UNTIL ADEQUATE VEGETATION IS ESTABLISHED

3. ALL SILT SCREEN FENCES SHALL BE CHECKED WEEKLY. REPAIRS SHALL BE MADE TO CORRECT UNDERMINING OR DETERIORATION OF THE BARRIERS.

E. WINTER CONSTRUCTION

"WINTER CONSTRUCTION" IS CONSTRUCTION ACTIVITY PERFORMED DURING THE PERIOD FROM NOVEMBER 1 THROUGH APRIL 15. IF DISTURBED AREAS ARE NOT STABILIZED WITH PERMANENT MEASURES BY NOVEMBER 1 OR IF NEW SOIL DISTURBANCE OCCURS AFTER NOVEMBER 1, BUT BEFORE APRIL 15, THEN THESE AREAS MUST BE PROTECTED AND RUNOFF FROM THEM MUST BE CONTROLLED BY ADDITIONAL MEASURES AND RESTRICTIONS.

WINTER EROSION CONTROL MEASURES SHALL CONFORM TO MAINE EROSION AND SEDIMENT CONTROL BMPS SECTION A–3.

WINTER EXCAVATION AND EARTHWORK SHALL BE COMPLETED SUCH THAT NO MORE THAN 1 ACRE OF THE SITE IS WITHOUT STABILIZATION AT ANY ONE TIME. LIMIT THE EXPOSED AREA TO THOSE AREAS IN WHICH WORK IS TO OCCUR DURING THE FOLLOWING 15 DAYS AND THAT CAN BE MULCHED IN ONE DAY PRIOR TO ANY SNOW EVENT.

DISTURBED SOILS – BY SEPTEMBER 15 THE CONTRACTOR SHALL SEED AND MULCH ALL DISTURBED SOILS ON THE SITE. IF THE CONTRACTOR FAILS TO STABILIZE THESE SOILS BY THIS DATE, THE CONTRACTOR SHALL TAKE ONE OF THE FOLLOWING ACTIONS TO STABILIZE THE SOIL FOR LATE FALL AND WINTER:

1. STABILIZE THE SOIL WITH TEMPORARY VEGETATION – BY OCTOBER 1 THE CONTRACTOR SHALL SEED THE DISTURBED SOIL WITH WINTER RYE AT A SEEDING RATE OF 3 POUNDS PER 1000 SQUARE FEET. LIGHTLY MULCH THE SEEDED SOIL WITH HAY OR STRAW AT 75 POUNDS PER 1000 SQUARE FEET, AND ANCHOR THE MULCH WITH PLASTIC NETTING. THE CONTRACTOR SHALL MONITOR GROWTH OF THE RYE OVER THE NEXT 30 DAYS. IF THE RYE FAILS TO GROW AT LEAST THREE INCHES OR FAILS TO COVER AT LEAST 75% OF THE DISTURBED SOIL BEFORE NOVEMBER 15, THEN THE CONTRACTOR SHALL MULCH THE AREA FOR OVER–WINTER PROTECTION AS DESCRIBED IN THE "STABILIZE THE SOIL WITH MULCH" SECTION BELOW .

E. WINTER CONSTRUCTION CONT:

2. STABILIZE THE SOIL WITH SOD – THE CONTRACTOR SHALL STABILIZE THE DISTURBED SOIL WITH PROPERLY INSTALLED SOD BY OCTOBER 1. PROPER INSTALLATION INCLUDES PINNING THE SOD ONTO THE SOIL WITH WIRE PINS, ROLLING THE SOD TO GUARANTEE CONTACT BETWEEN THE SOD AND UNDERLYING SOIL AND WATERING THE SOD TO PROMOTE ROOT GROWTH INTO HE DISTURBED SOIL.
3. STABILIZE THE SOIL WITH MULCH – BY NOVEMBER 15 THE CONTRACTOR SHALL MULCH THE DISTURBED SOIL BY SPREADING HAY OR STRAW AT A RATE OF AT LEAST 150 POUNDS PER 1000 SQUARE FEET ON THE AREA SO THAT NO SOIL IS VISIBLE THROUGH THE MULCH, IMMEDIATELY AFTER APPLYING THE MULCH. THE CONTRACTOR SHALL ANCHOR THE MULCH WITH NETTING OR OTHER METHOD TO PREVENT WIND FROM MOVING THE MULCH OFF THE DISTURBED SOIL.

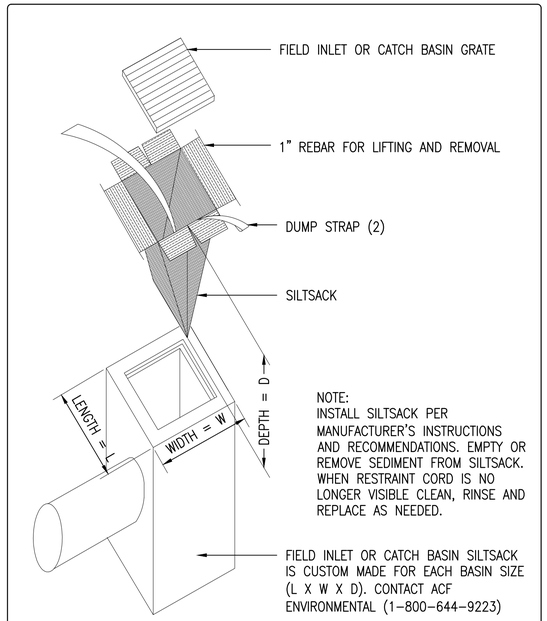

SILTSACK INLET SEDIMENT CONTROL DEVISE

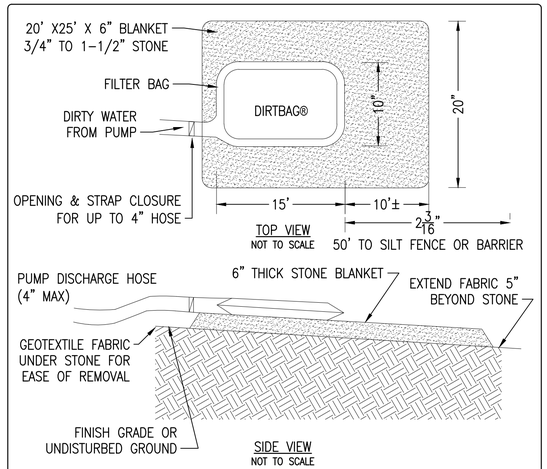

NOTES:
1. DIRT BAG MATERIAL ON PARTICLE SIZE IN DIRTY WATER, I.E. FOR COARSE PARTICLES A WOVEN MATERIAL; FOR SLITS/CLAYS A NON–WOVEN MATERIAL
2. DO NOT OVER PRESSURIZE DIRT BAG OR USE BEYOND CAPACITY.
3. LOCATE DISCHARGE SITE ON FLAT UPLAND AREAS AS FAR AWAY AS POSSIBLE FROM STREAMS, WETLANDS, OTHER RESOURCES AND POINTS OF CONCENTRATED FLOW
4. DOWNGRADIENT RECEIVING AREA MUST BE WELL VEGETATED OR OTHERWISE STABLE FROM EROSION, E.G. FOREST FLOOR OR COARSE GRAVEL / STONE.
5. DISCHARGE NOT PERMITTED WITHIN 25' OF A STREAM OR WELAND CONSULT DEP IF STRUCTURE MUST BE WITHIN 75' OF STREAM OR WATER BODY SECONDARY CONTAINMENT MAY BE REQUIRED.
6. AN OIL/WATER SEPARATOR OR FILTRATION MECHANISM SHALL BE INSTALLED PRIOR TO DISCHARGE IS CONTAMINATED WITH PETROLEUM PRODUCTS.

PUMPED DISCHARGE SEDIMENT CONTROL DEVICE ("DIRT BAG")

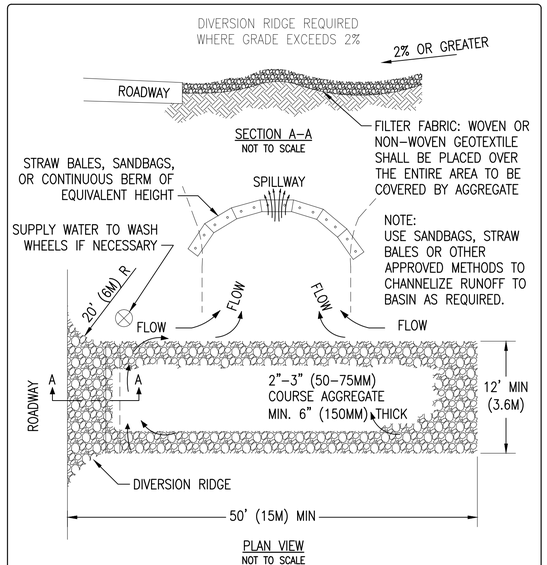

NOTES:
1. THE ENTRANCE SHALL BE MAINTAINED IN A CONDITION THAT WILL PREVENT TRACKING OR FLOWING OF SEDIMENT ONTO PUBLIC RIGHT–TO–WAYS. THIS MAY REQUIRE TOP DRESSING, REPAIR AND/OR CLEANOUT OF ANY MEASURES USED TO TRAP SEDIMENT.
2. WHEN NECESSARY, WHEELS SHALL BE CLEANED PRIOR TO ENTRANCE ONTO PUBLIC RIGHT–OF–WAY
3. WHEN WASHING IS REQUIRED, IT SHALL BE DONE ON AN AREA STABILIZED WITH CRUSHED STONE THAT DRAINS INTO AN APPROVED SEDIMENT TRAP OR SEDIMENT BASIN

TEMPORARY GRAVEL CONSTRUCTION ENTRANCE/EXIT

STM	DESCRIPTION	DATE	APPR
0	ISSUE OF BID DOCUMENT	1/14/2016	ED

NAVFAC

STATE OF MAINE ERIC DUBE No. 12630 LICENSED PROFESSIONAL ENGINEER

SEAL

JV CASCO BAY ENGINEERING CONSULTING ENGINEERS

APPROVED

FOR COMMANDER NAVFAC

ACTIVITY

SATISFACTORY TO DATE

DES: A/E DRW: FP CHK: A/E

PM/DM: XXX

BRANCH MANAGER

FEAD/PM&E

FIRE PROTECTION X

DEPARTMENT OF THE NAVY
NAVAL FACILITIES ENGINEERING COMMAND
PUBLIC WORKS DEPARTMENT – MAINE
NAVAL FACILITIES ENGINEERING COMMAND – MID-ATLANTIC
NAVAL SHIPYARD – PORTSMOUTH, NH
PORTSMOUTH NAVAL SHIPYARD KITTERY, MAINE
RMe REPAIR STEAM AND CONDENSATE CENTER LOOP, RM14–0206

EROSION CONTROL NOTES AND DETAILS

EPROJECT NO.: 1370674

CONSTR. CONTR. NO. N40085–##–##–####

NAVFAC DRAWING NO. #######

SHEET 10 OF ##

C-500 MS-15-NUM

DRAWFORM REVISION: 10 MARCH 2009

FILE NAME: P:\Data\PROJECTS\2015 Proj\15-058 NAVFAC TO-1\Dwg\CIVIL\2016 Project Update Drawings\Center Loop\C500S CL 1-07-7.dwg LAYOUT NAME: C500 PLOTTED: Friday, January 15, 2016 - 11:36am USER: Tony

PIPE SYMBOLS

- GATE VALVE
- HOSE GATE DRAIN VALVE
- GLOBE VALVE
- BUTTERFLY VALVE
- CHECK VALVE
- BALL VALVE
- PIPE ANCHOR
- EXPANSION JOINT
- GENERIC PUMP
- RISE IN RESPECT TO FLOW
- DROP IN RESPECT TO FLOW
- ROUND ELBOW DOWN
- ROUND ELBOW UP
- FLEX CONNECTION
- PRESSURE GAUGE
- Y-TYPE STRAINER
- WELD CAP
- REMOVABLE CAP
- REMOVABLE PLUG
- REDUCER (CONCENTRIC)
- REDUCER (ECCENTRIC)
- UNION
- BLIND FLANGE

MECHANICAL GENERAL NOTES:

1. LEGEND IS GENERAL IN NATURE AND MAY INDICATE MORE INFORMATION THAN IS APPLICABLE TO PROJECT. SEE PLANS FOR SPECIFIC SYMBOLS AND ABBREVIATIONS.
2. PROVIDE ALL MATERIALS, VALVES, HANGERS, ETC. AND EQUIPMENT AND PERFORM ALL LABOR REQUIRED TO INSTALL COMPLETE AND OPERABLE MECHANICAL SYSTEMS AS INDICATED ON THE DRAWINGS, AS SPECIFIED AND AS REQUIRED BY CODE.
3. INSTALL ALL MECHANICAL EQUIPMENT AND APPURTENANCES IN ACCORDANCE WITH MANUFACTURERS RECOMMENDATIONS, CONTRACT DOCUMENTS, AND APPLICABLE CODES AND REGULATIONS.
4. COORDINATE CONSTRUCTION OF ALL MECHANICAL WORK WITH STRUCTURAL, CIVIL, ELECTRICAL WORK, ETC., SHOWN ON OTHER CONTRACT DOCUMENT DRAWINGS.
5. LOCATE ALL MECHANICAL EQUIPMENT FOR UNOBSTRUCTED ACCESS TO UNIT ACCESS PANELS, CONTROLS, AND VALVING.
6. VERIFY DIMENSIONS AND CONNECTION SIZE WITH FURNISHED EQUIPMENT.
7. COORDINATE AND PROVIDE ALL PIPING TRANSITIONS REQUIRED AND FINAL CONNECTIONS TO EQUIPMENT FURNISHED.
8. PIPING IS INDICATED DIAGRAMMATICALLY AND ALL REQUIRED FITTINGS ARE NOT INDICATED. PROVIDE ALL FITTINGS REQUIRED TO PROVIDE A COMPLETE PIPING SYSTEM.
9. THE DRAWINGS SHOW VARIOUS PIPING SYSTEMS SCHEMATICALLY AND DO NOT ATTEMPT TO SHOW EXACT DETAILS OF ALL PIPING OR ALL OFFSETS THAT MAY BE REQUIRED. VERIFY ALL DIMENSIONS, ELEVATIONS AND CONNECTIONS THAT ARE DETERMINED BY EQUIPMENT SELECTION AND ADJUST SYSTEMS TO ENSURE THAT EQUIPMENT, PIPE, ETC., CAN BE INSTALLED IN THE ALLOTTED SPACE. NO ADDED COMPENSATION SHALL BE PERMITTED FOR VARIATION DUE TO EQUIPMENT SELECTION.
10. NOT ALL REQUIRED PIPE SUPPORTS ARE INDICATED. PROVIDE SUPPORTS IN ACCORDANCE WITH ASME B31.1 (POWER PIPING), LATEST EDITION. MAXIMUM PIPE SUPPORT SPACING SHALL BE IN ACCORDANCE WITH TABLE 121.5 (SUGGESTED PIPE SUPPORT SPACING).
11. ALL PIPING BENDS SHALL BE LONG RADIUS UNLESS NOTED OTHERWISE.
12. PROVIDE FLUID TIGHT PLUGS, CAPS, OR CLASS 150 BLIND FLANGES AT ALL PIPE TERMINATIONS.
13. ALL STEAM AND CONDENSATE PIPING, INCLUDING VALVES, STEAM TRAPS, STRAINERS, FLANGES, ETC., SHALL BE RATED FOR A DESIGN PRESSURE AND TEMPERATURE OF 150 PSIG AT 450 DEGREES FAHRENHEIT. ALL STEAM AND CONDENSATE ISOLATION VALVES SHALL BE RATED FOR A DIFFERENTIAL PRESSURE ACROSS THE VALVE SEATS OF 150 PSID AT 450 DEGREES FAHRENHEIT WHEN THE VALVES ARE IN THE IN THE FULLY CLOSED POSITION AND SEAT LEAKAGE CLASSIFICATION OF CLASS IV IN ACCORDANCE WITH ANSI/FCI 70-2 (CONTROL VALVE SEAT LEAKAGE).
14. PROVIDE 2" TEMPORARY STEAM PIPE OR HOSE THROUGHOUT CONSTRUCTION FROM BUILDING 174 2" STEAM PIPING (ABOVE EXISTING MANHOLE 352F) OVER TO BUILDING 291 EVAPORATOR SHACK. COORDINATE ANY OUTAGE WITH THE CONTRACTING OFFICER. REMOVE TEMPORARY PIPING/HOSE AFTER PERMANENT PIPING SYSTEM HAS BEEN TESTED AND ACCEPTED BY THE CONTRACTING OFFICER. ROUTE TEMPORARY CONNECTION THROUGH EXISTING TRENCH BETWEEN MANHOLES 352F AND 352D AND THEN OVER TO BUILDING 291 OR LAY ON GRADE AND PROVIDE H-20 RATED RAMPING AND COVER OVER STEAM PIPING TO ALLOW MANLIFT TRAFFIC. ALL TEMPORARY SERVICES SHALL BE REMOVED BY THE CONTRACTOR WITHIN 21 CALENDAR DAYS OF THE CONTRACTING OFFICER ACCEPTING THE NEW SERVICE CONNECTIONS.

STEAM TRAP SCHEDULE (T)	
TAG NO.	T-1
PIPING DESCRIPTION	STEAM MAIN
TYPE OF TRAP	IBT
CONDENSATE DEMAND (LBS/HR)	100
FLOW DIRECTION	HORIZONTAL
SIZING DIFFERENTIAL PRESSURE (PSIG)	100
APPROX. RATED TRAP CAPACITY @ OPERATING DIFFERENTIAL PRESSURE (LBS/HR)	118
MAXIMUM OPERATING DIFFERENTIAL PRESSURE (PSIG)	200
STEAM TRAP MIN. DESIGN PRESSURE AND TEMPERATURE (PSIG/°F)	400/800
END CONNECTION SIZE (CONNECTION TYPE)	3/4" (NPT)
NOTES:	1, 2, 3, AND 4

NOTES:

1. STEAM TRAPS SHALL BE UNINSULATED.
2. IBT = INVERTED BUCKET TRAP.
3. SIZING DIFFERENTIAL PRESSURE SHALL BE DEFINED AS THE TRAP INLET PRESSURE MINUS THE TRAP OUTLET PRESSURE OR THE BACK PRESSURE IN CONDENSATE LINE DOWNSTREAM OF TRAP.
4. TRAP VALVE STATION (TVS) SHALL INCLUDE INTEGRAL STRAINER, BLOWDOWN VALVE, TRAP INLET AND OUTLET ISOLATION VALVES, AND TEST VALVE. CHECK VALVE SHALL BE PROVIDED DOWNSTREAM OF TVS.

PIPE LINE ABBREVIATIONS

CA	COMPRESSED AIR
COND, CR	CONDENSATE RETURN
EXIST	EXISTING
HS	HOT WATER SUPPLY
HR	HOT WATER RETURN
ST, STM	STEAM

MECHANICAL ABBREVIATIONS

BOP	BOTTOM OF PIPE
BLDG	BUILDING
CIA	CONTROLLED INDUSTRIAL AREA
CL	CENTER LINE OF PIPE ELEVATION
CONC	CONCENTRIC
DN	DOWN
ED	ELECTRICAL DUCTBANK
EL	ELEVATION
ELL	ELBOW
EXIST/EXST	EXISTING
FOB	FLAT ON BOTTOM
FOT	FLAT ON TOP
HP	HIGH PRESSURE (125 PSIG OPERATING)
IBT	INVERTED BUCKET TRAP
MH	MANHOLE
NTS	NOT TO SCALE
PSIA	POUNDS PER SQUARE INCH ABSOLUTE
PSID	POUNDS PER SQUARE INCH DIFFERENTIAL
PSIG	POUNDS PER SQUARE INCH GAUGE
RED	REDUCER-REDUCING
SCH	SCHEDULE
SD	STORM DRAIN
S	SANITARY

DETAIL/SECTION TITLE

DETAIL TITLE

SCALE: X/X" = 1'-0" A-500 1

SCALE

DETAIL NUMBER

SHEET ON WHICH DETAIL IS REFERENCED

DETAIL/SECTION CALLOUT SYMBOL

0 A-000

0 A-000

ENLARGED PLAN/DETAIL REFERENCE

SECTION CUT SYMBOL

INDICATES PERSPECTIVE

SECTION DESIGNATOR

A A-000

LIMITS OF SECTION

DRAWING WHERE SECTION IS DRAWN

NORTH ARROW

PLAN NORTH LINE

TRUE NORTH ARROW

CONSTRUCTION INTERFACE

EXISTING TO REMAIN — DEMOLITION

EXISTING TO REMAIN — NEW WORK

AREA OF WORK

SUMP PUMP SCHEDULE	
TAG NO.	SUMP PUMP
SERVICE	VALVE MANHOLE
TYPE	HIGH TEMPERATURE, CORROSION RESISTANT SUBMERSIBLE
FLOW (GPM)	50
HEAD (FT WG)	32
MAX SOLID SIZE (IN)	2
DISCHARGE SIZE (IN)	2
MAXIMUM OPERATING TEMPERATURE (°F)	200
MAX HP	1
VOLTAGE / PHASE / FREQUENCY	208/1/60
NOTES:	1, 2

NOTES:

1. PROVIDE WITH POWER WHIP TO SEALED JUNCTION BOX.
2. CONNECT JUNCTION BOX TO SITE PLANT POWER AS DIRECTED BY NAVFAC.

SYM	DESCRIPTION	DATE	APPR
0	ISSUE OF BID DOCUMENT	01/14/2016	JPC

NAVFAC

COMMONWEALTH OF VIRGINIA JOHN PATRICK CASTELLAZZETTI, JR. Lic. No 043782 01-14-2016 PROFESSIONAL ENGINEER SEAL

BURNS McDONNELL

A/E INFO

APPROVED

FOR COMMANDER NAVFAC

ACTIVITY

SATISFACTORY TO DATE

DES A/E DRW FP CHK A/E

PM/DM ROGER ROY

BRANCH MANAGER NATHAN MAHER

FEAD/PM&E AMIN BAHROUR PM&E

FIRE PROTECTION X

DEPARTMENT OF THE NAVY
NAVAL FACILITIES ENGINEERING COMMAND
PUBLIC WORKS DEPARTMENT – MAINE
NAVAL FACILITIES ENGINEERING COMMAND ~ MID-ATLANTIC
NAVAL SHIPYARD – PORTSMOUTH, NH
PORTSMOUTH NAVAL SHIPYARD KITTERY, MAINE

RMe REPAIR STEAM AND CONDENSATE CENTER LOOP, RM14-0206

MECHANICAL LEGEND

EPROJECT NO.: 137064

CONSTR. CONTR. NO. N40085-##-###-####

NAVFAC DRAWING NO. 12706402

SHEET 12 OF 31

M-001 MS-15-XXX

DRAWFORM REVISION: 10 OCTOBER 2014

FILE NAME: \\bmcd\pfs\Clients\ANF\USNavy\WGA1\65860_PNSY\116\EM\Design\Mech\Sheets\1 - RM 14-0206 - Repair Steam and Condensate Center Loop\M001.dwg LAYOUT NAME: M001 PLOTTED: Monday, January 11, 2016 - 4:30pm USER: jrodriguez

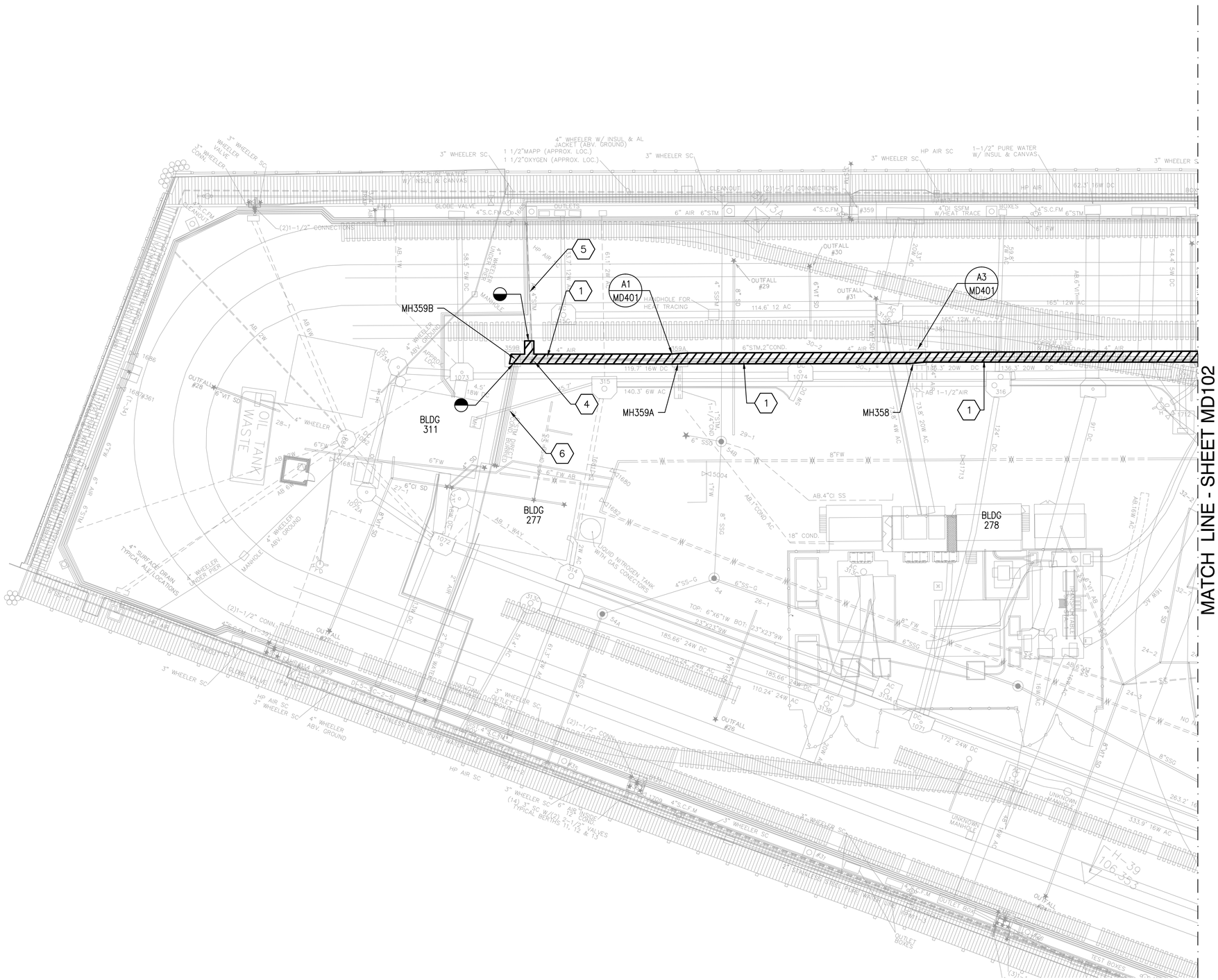

DEMOLITION PLAN

SCALE: 1" = 20'

PLAN NORTH

GENERAL SHEET NOTES

1. SEE SHEET G002 AND M001 FOR LEGEND, ABBREVIATIONS, AND GENERAL NOTES.
2. REMOVE AND RETAIN EXISTING TRENCH COVERS FOR REUSE. DEMOLISH EXISTING STEAM AND CONDENSATE PIPE SUPPORTS FOR THE DEMOLISHED STEAM AND CONDENSATE PIPING.
3. EXISTING COMPRESSED AIR PIPING IN THE EXISTING TRENCHES SHALL REMAIN. PROTECT EXISTING COMPRESSED AIR PIPING AND COATING THROUGHOUT CONSTRUCTION. PROVIDE TEMPORARY HANGERS AS REQUIRED.
4. SEE M-600 SERIES FOR DEMARCATION OF NEW AND EXISTING STEAM AND CONDENSATE PIPING AND POINTS OF CONNECTION FOR STEAM AND CONDENSATE.

DEMOLITION KEYNOTES

1. DEMOLISH EXISTING 6" STEAM AND 2" CONDENSATE IN EXISTING TRENCH.
2. NOT USED.
3. NOT USED.
4. DEMOLISH EXISTING 4" STEAM CONNECTION.
5. EXISTING 4" STEAM CONNECTION TO REMAIN.
6. EXISTING 6" STEAM AND 2" CONDENSATE IN EXISTING TRENCH TO REMAIN.

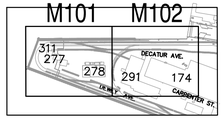

KEYPLAN

SCALE: N.T.S.

GRAPHIC SCALE

1" = 20' 20 10 0 20 40 60

scale feet

CHECK GRAPHIC SCALE BEFORE USING

SYM	DESCRIPTION	DATE	APPR
0	ISSUE OF BID DOCUMENT	01/14/2016	JPC

NAVFAC

COMMONWEALTH OF VIRGINIA
JOHN PATRICK CASTELVECCHI, JR.
Lic. No 043782
01-14-2016
PROFESSIONAL ENGINEER
SEAL

BURNS McDONNELL

A/E INFO

APPROVED

FOR COMMANDER NAVFAC

ACTIVITY

SATISFACTORY TO DATE

DES A/E | DRW FP | CHK A/E

PM/DM ROGER ROY

BRANCH MANAGER NATHAN MAHER

FEAD/PM&E AMIN BAHROUR PM&E

FIRE PROTECTION X

DEPARTMENT OF THE NAVY
NAVAL FACILITIES ENGINEERING COMMAND
PUBLIC WORKS DEPARTMENT – MAINE
NAVAL FACILITIES ENGINEERING COMMAND – MID-ATLANTIC
NAVAL SHIPYARD – PORTSMOUTH, NH
PORTSMOUTH NAVAL SHIPYARD, KITTERY, MAINE

RMe REPAIR STEAM AND CONDENSATE CENTER LOOP, RM14-0206

DEMOLITION PLAN

EPROJECT NO.: 1370674

CONSTR. CONTR. NO. N40085-##-###-####

NAVFAC DRAWING NO. 12706403

SHEET 12 OF 31

MD101 | MS-15-XXXX

DRAWFORM REVISION: 10 OCTOBER 2014

FILE NAME: \\pmcd\dfs\Clients\ANF\USNavy\M&A\85860_PNSY\Y16\EM\Design\Mech\Sheets\1 - RM 14-0206 - Repair Steam and Condensate Center Loop\MD101.dwg LAYOUT NAME: MD101 PLOTTED: Monday, January 11, 2016 - 4:35pm USER: jrodriguez

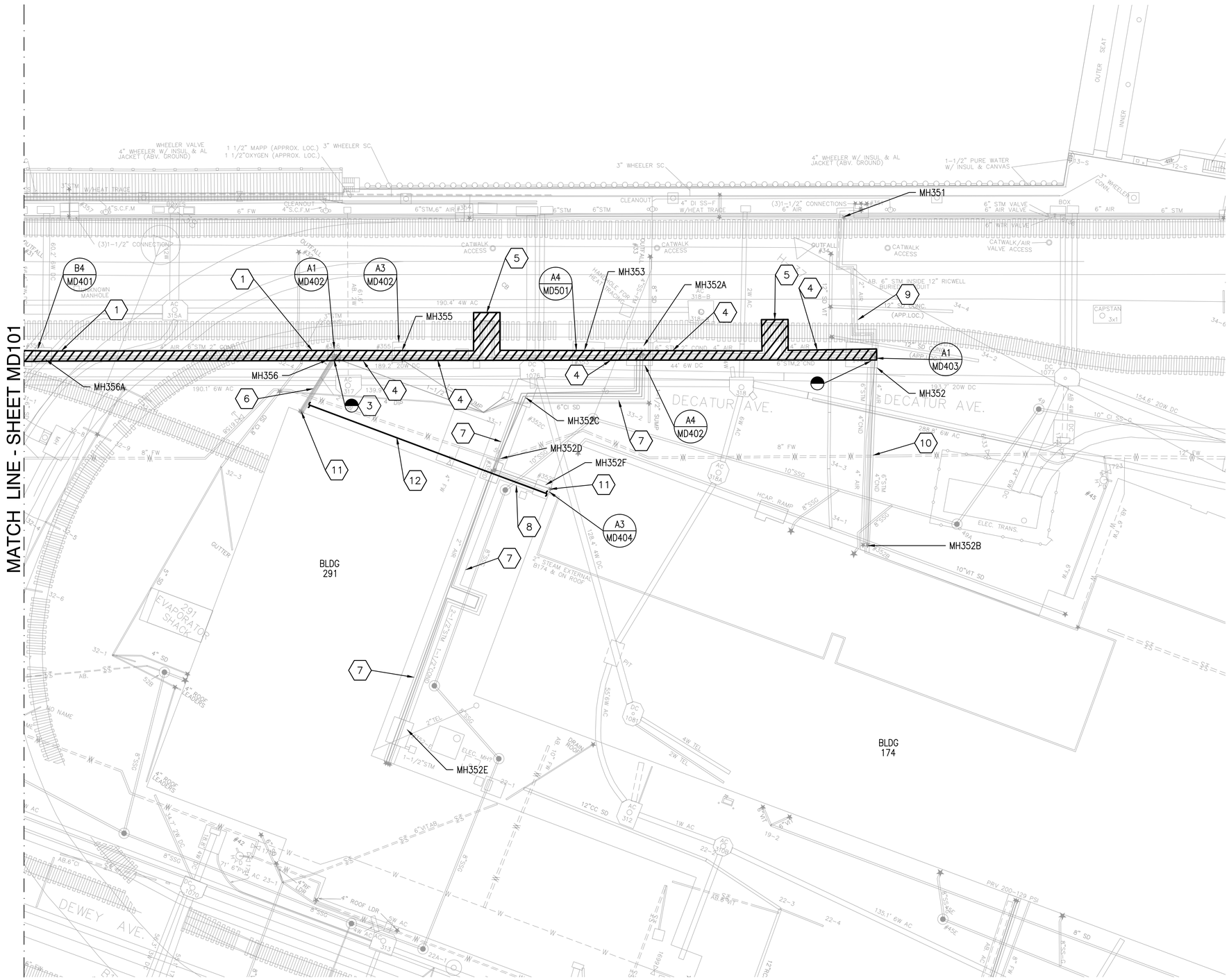

DEMOLITION PLAN

SCALE: 1" = 20'

GENERAL SHEET NOTES

1. SEE SHEET G002 AND M001 FOR LEGEND, ABBREVIATIONS, AND GENERAL NOTES.
2. REMOVE AND RETAIN EXISTING TRENCH COVERS FOR REUSE. DEMOLISH EXISTING STEAM AND CONDENSATE PIPE SUPPORTS FOR THE DEMOLISHED STEAM AND CONDENSATE PIPING.
3. EXISTING COMPRESSED AIR PIPING IN THE EXISTING TRENCHES SHALL REMAIN. PROTECT EXISTING COMPRESSED AIR PIPING AND COATING THROUGHOUT CONSTRUCTION. PROVIDE TEMPORARY HANGERS AS REQUIRED.
4. SEE M-600 SERIES FOR DEMARCATION OF NEW AND EXISTING STEAM AND CONDENSATE PIPING AND POINTS OF CONNECTION FOR STEAM AND CONDENSATE.

DEMOLITION KEYNOTES

1. DEMOLISH EXISTING 6" STEAM AND 2" CONDENSATE IN EXISTING TRENCH.
2. NOT USED.
3. DEMOLISH STEAM AND CONDENSATE AND BUILDING CONNECTION ISOLATION VALVES IN MANHOLE. SEE ENLARGED PLANS.
4. DEMOLISH EXISTING 6" STEAM AND 4" CONDENSATE IN EXISTING TRENCH.
5. DEMOLISH EXISTING STEAM AND CONDENSATE EXPANSION LOOPS.
6. EXISTING 3" STEAM, (2) 2" STEAM, AND 2" CONDENSATE IN EXISTING TRENCH TO REMAIN.
7. EXISTING 2½" STEAM AND 1½" CONDENSATE IN EXISTING TRENCH TO REMAIN.
8. EXISTING 2" STEAM AND 1" HP DRIP IN EXISTING TRENCH TO REMAIN.
9. EXISTING DIRECT BURIED 6" STEAM TO REMAIN.
10. EXISTING 6" STEAM AND 4" CONDENSATE IN EXISTING TRENCH TO REMAIN.
11. TIE IN LOCATIONS FOR 2" TEMPORARY STEAM PIPE/HOSE TO MAINTAIN STEAM SERVICE TO BUILDING 291 EVAPORATOR SHACK. SEE MECHANICAL GENERAL NOTES ON SHEET M001.
12. PATH FOR 2" TEMPORARY STEAM PIPE/HOSE TO MAINTAIN STEAM SERVICE TO BUILDING 291 EVAPORATOR SHACK. SEE MECHANICAL GENERAL NOTES ON SHEET M001.

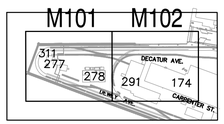

KEYPLAN

SCALE: N.T.S.

GRAPHIC SCALE

1" = 20' 20 10 0 20 40 60 scale feet

CHECK GRAPHIC SCALE BEFORE USING

STM	DESCRIPTION	DATE	APPR
0	ISSUE OF BID DOCUMENT	01/14/2016	JPC

NAVFAC

COMMONWEALTH OF VIRGINIA
JOHN PATRICK CASTELLARIN, JR.
Lic. No 043782
01-14-2016
PROFESSIONAL ENGINEER
SEAL

BURNS McDONNELL

A/E INFO

APPROVED

FOR COMMANDER NAVFAC

ACTIVITY

SATISFACTORY TO DATE

DES A/E | DRW FP | CHK A/E

PM/DM ROGER ROY

BRANCH MANAGER NATHAN MAHER

FEAD/PM&E AMIN BAHROUR PM&E

FIRE PROTECTION X

DEPARTMENT OF THE NAVY
NAVAL FACILITIES ENGINEERING COMMAND
PUBLIC WORKS DEPARTMENT – MAINE
NAVAL FACILITIES ENGINEERING COMMAND – MID-ATLANTIC
NAVAL SHIPYARD – PORTSMOUTH, NH
KITTERY, MAINE
PORTSMOUTH NAVAL SHIPYARD
RMe REPAIR STEAM AND CONDENSATE CENTER LOOP, RM14-0206

DEMOLITION PLAN

EPROJECT NO.: 1370674

CONSTR. CONTR. NO. N40085-##-###-####

NAVFAC DRAWING NO. 12706404

SHEET 13 OF 31

MD102 | MS-15-XXXX

DRAWFORM REVISION: 10 OCTOBER 2014

FILE NAME: \\bmcd\dfs\Clients\ANF\USNavy\MidAt\85860_PNSY\16\EM\Design\Mech\Sheets\1 - RM 14-0206 - Repair Steam and Condensate Center Loop\MD102.dwg LAYOUT NAME: MD102 PLOTTED: Monday, January 11, 2016 - 4:35pm USER: jrodriguez

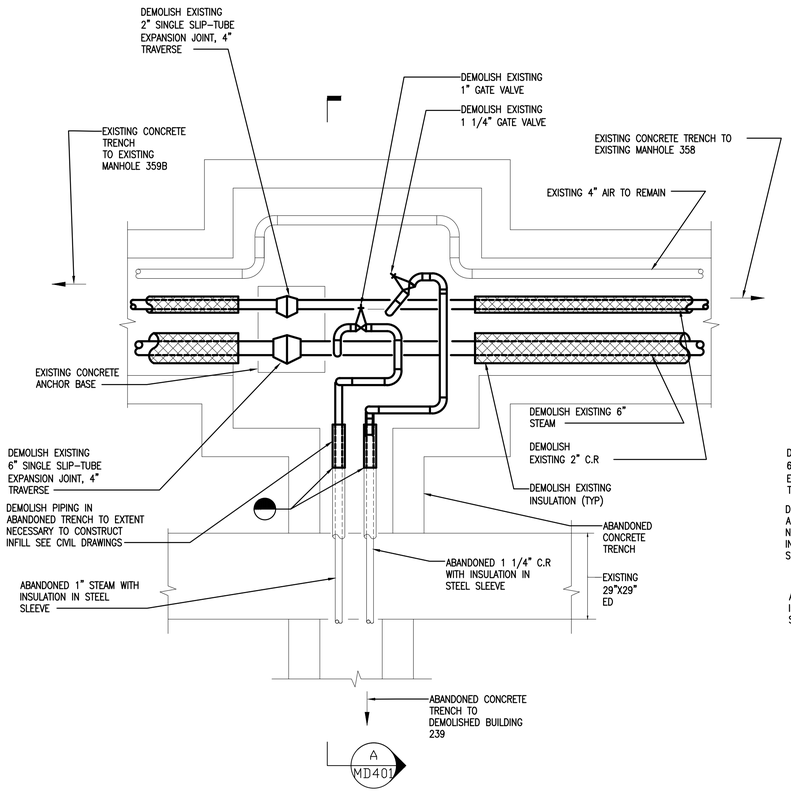

PLAN

SCALE: N.T.S

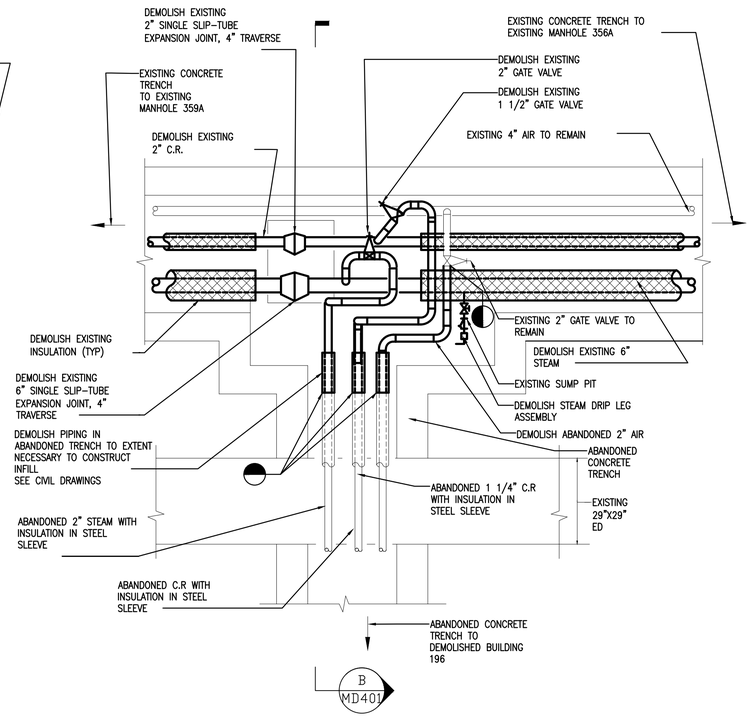

PLAN

SCALE: N.T.S

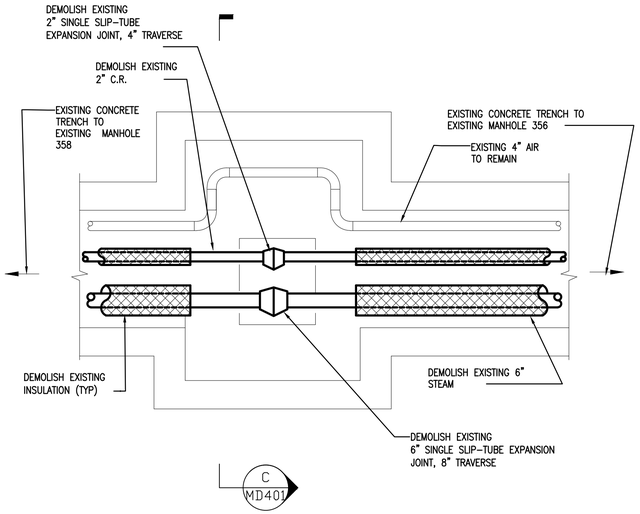

PLAN

SCALE: N.T.S

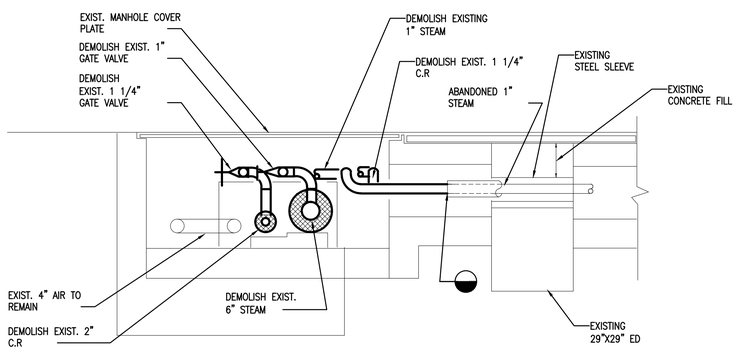

SECTION

SCALE: NTS MD401 A

EXISTING MANHOLE 359A - DEMOLITION

SCALE: NTS MD101 A1

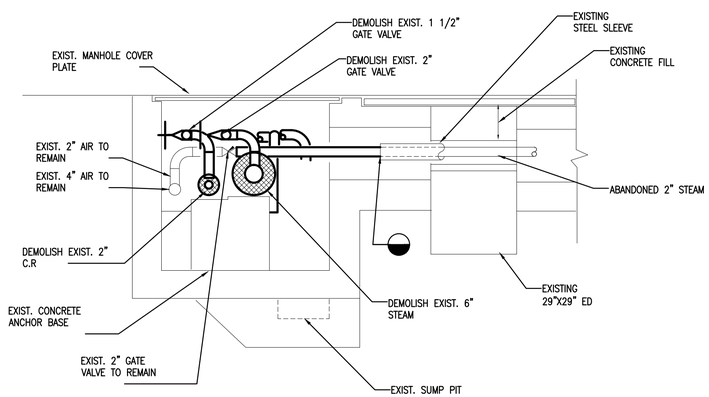

SECTION

SCALE: NTS MD401 B

EXISTING MANHOLE 358 - DEMOLITION

SCALE: NTS MD101 A3

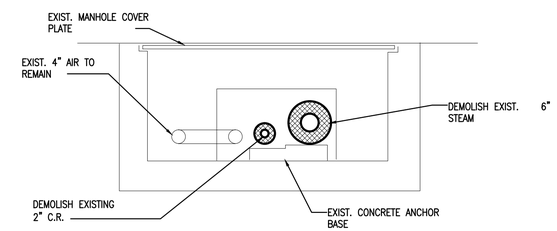

SECTION

SCALE: NTS MD401 C

EXISTING MANHOLE 356A - DEMOLITION

SCALE: NTS MD102 B4

GENERAL SHEET NOTES

1. SEE SHEET G002 AND M001 FOR LEGEND, ABBREVIATIONS, AND GENERAL NOTES.

SYM	DESCRIPTION	DATE	APPR
0	ISSUE OF BID DOCUMENT	01/14/2016	JPC

NAVFAC

COMMONWEALTH OF VIRGINIA
JOHN PATRICK CASTELLAZZETTI, JR.
Lic. No 043782
01-14-2016
PROFESSIONAL ENGINEER
SEAL

BURNS McDONNELL

A/E INFO

APPROVED

FOR COMMANDER NAVFAC

ACTIVITY

SATISFACTORY TO DATE

DES A/E DRW FP CHK A/E

PM/DM ROGER ROY

BRANCH MANAGER NATHAN MAHER

FEAD/PM&E AMIN BAHROUR PM&E

FIRE PROTECTION X

DEPARTMENT OF THE NAVY
NAVAL FACILITIES ENGINEERING COMMAND
NAVAL FACILITIES ENGINEERING COMMAND – MID-ATLANTIC
PUBLIC WORKS DEPARTMENT – MAINE
NAVAL SHIPYARD – PORTSMOUTH, NH
KITTERY, MAINE
PORTSMOUTH NAVAL SHIPYARD
RMe REPAIR STEAM AND CONDENSATE CENTER LOOP, RM14-0206

STEAM MANHOLES PIPING – DEMOLITION

EPROJECT NO.: 1370674

CONSTR. CONTR. NO. N40085-##-###-####

NAVFAC DRAWING NO. 12706405

SHEET 14 OF 31

MD401 MS-15-XXXX

DRAWFORM REVISION: 10 OCTOBER 2014

FILE NAME: \\bmcd\dfs\Clients\ANF\USNavy\MidAtl\85860_PNSY\FY16\EDM\Design\Mech\Sheets\1 - RM 14-0206 - Repair Steam and Condensate Center Loop\MD401.dwg LAYOUT NAME: MD401 PLOTTED: Monday, January 11, 2016 - 4:36pm USER: jrodriguez

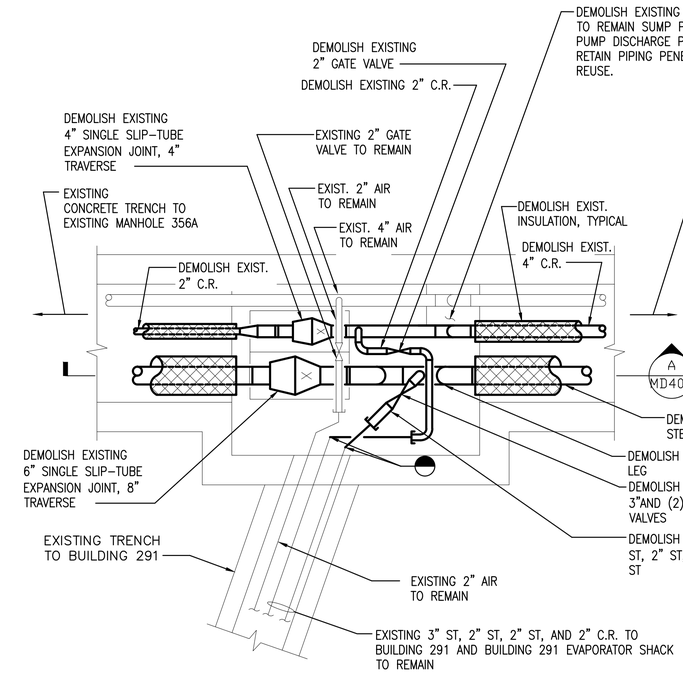

PLAN

SCALE: N.T.S

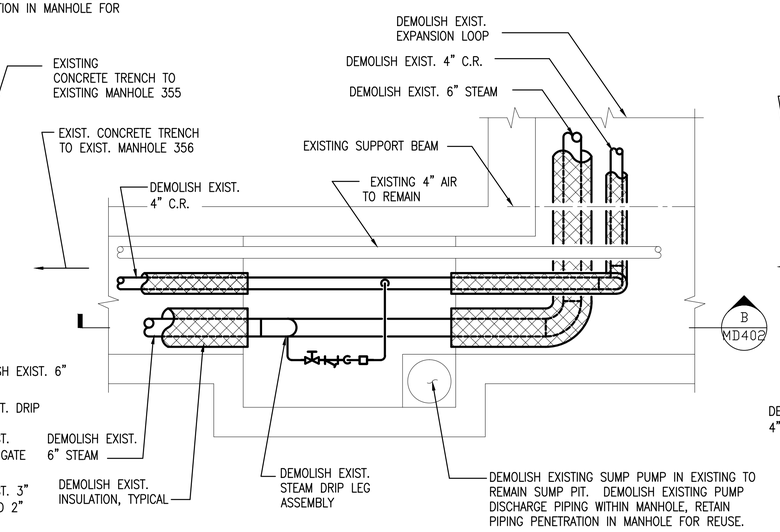

PLAN

SCALE: N.T.S

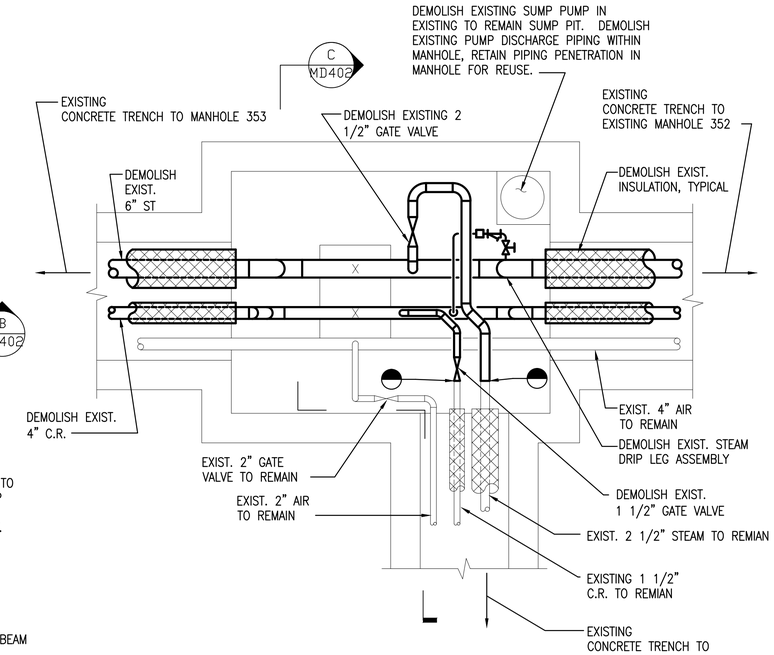

PLAN

SCALE: N.T.S

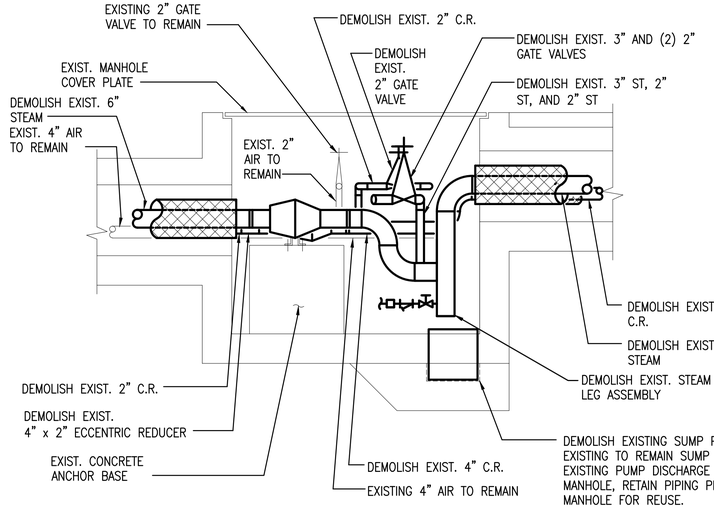

SECTION

SCALE: NTS MD402 A

EXISTING MANHOLE 356 - DEMOLITION

SCALE: NTS MD102 A1

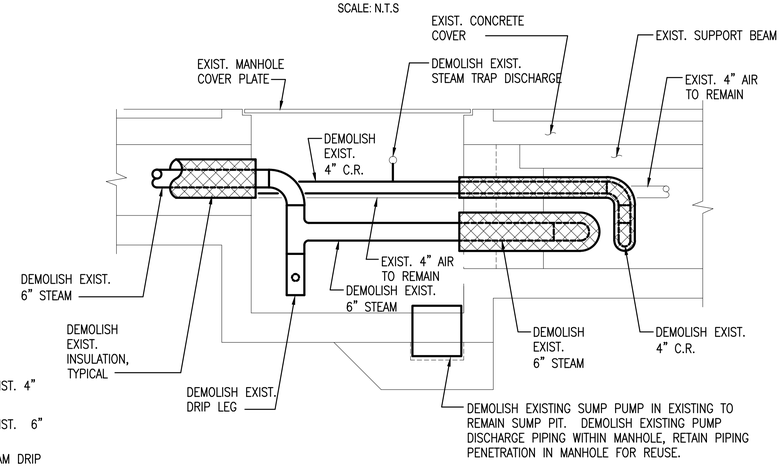

SECTION

SCALE: NTS MD402 B

EXISTING MANHOLE 355 - DEMOLITION

SCALE: NTS MD102 A3

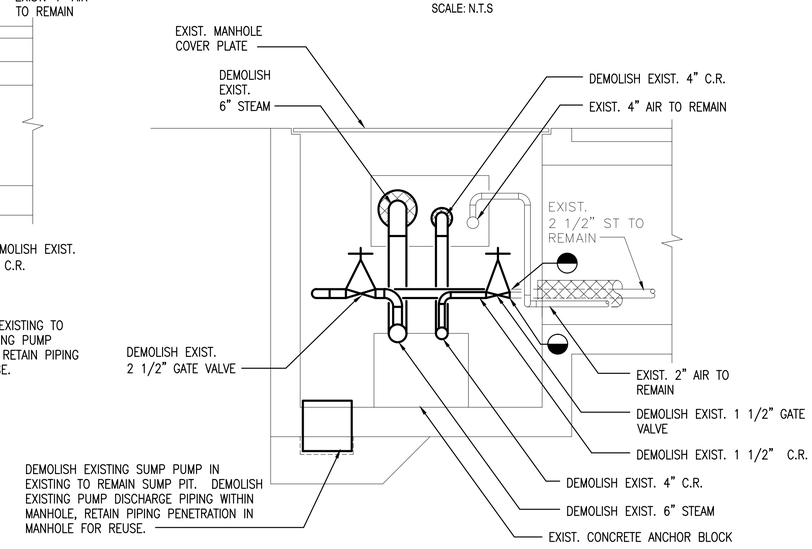

SECTION

SCALE: NTS MD402 C

EXISTING MANHOLE 352A - DEMOLITION

SCALE: NTS MD102 A4

GENERAL SHEET NOTES

1. SEE SHEET G002 AND M001 FOR LEGEND, ABBREVIATIONS, AND GENERAL NOTES.

SYM	DESCRIPTION	DATE	APPR
0	ISSUE OF BID DOCUMENT	01/14/2016	JPC

NAVFAC

COMMONWEALTH OF VIRGINIA
JOHN PATRICK CASTELLAZZETTI, JR.
Lic. No 043782
01-14-2016
PROFESSIONAL ENGINEER
SEAL

BURNS McDONNELL

A/E INFO.

APPROVED

FOR COMMANDER NAVFAC

ACTIVITY

SATISFACTORY TO DATE

DES A/E | DRW FP | CHK A/E

PM/DM ROGER ROY

BRANCH MANAGER NATHAN MAHER

FEAD/PM&E AMIN BAHROUR PM&E

FIRE PROTECTION X

DEPARTMENT OF THE NAVY
NAVAL FACILITIES ENGINEERING COMMAND
PUBLIC WORKS DEPARTMENT – MAINE
NAVAL FACILITIES ENGINEERING COMMAND ~ MID-ATLANTIC
NAVAL SHIPYARD – PORTSMOUTH, NH
PORTSMOUTH NAVAL SHIPYARD, KITTERY, MAINE
RMe REPAIR STEAM AND CONDENSATE CENTER LOOP, RM14-0206
STEAM MANHOLES PIPING – DEMOLITION

EPROJECT NO.: 1370674

CONSTR. CONTR. NO. N40085-##-###-####

NAVFAC DRAWING NO. 12706406

SHEET 15 OF 31

MD402 MS-15-XXXX

DRAWFORM REVISION: 10 OCTOBER 2014

FILE NAME: \\bmcs\pfs\Clients\ANF\USNavy\MD4N\85860_PNSY\FY16\IEM\Design\Mech\Sheets\1 - RM 14-0206 - Repair Steam and Condensate Center Loop\MD402.dwg LAYOUT NAME: MD402 PLOTTED: Monday, January 11, 2016 - 4:36pm USER: jrodriguez

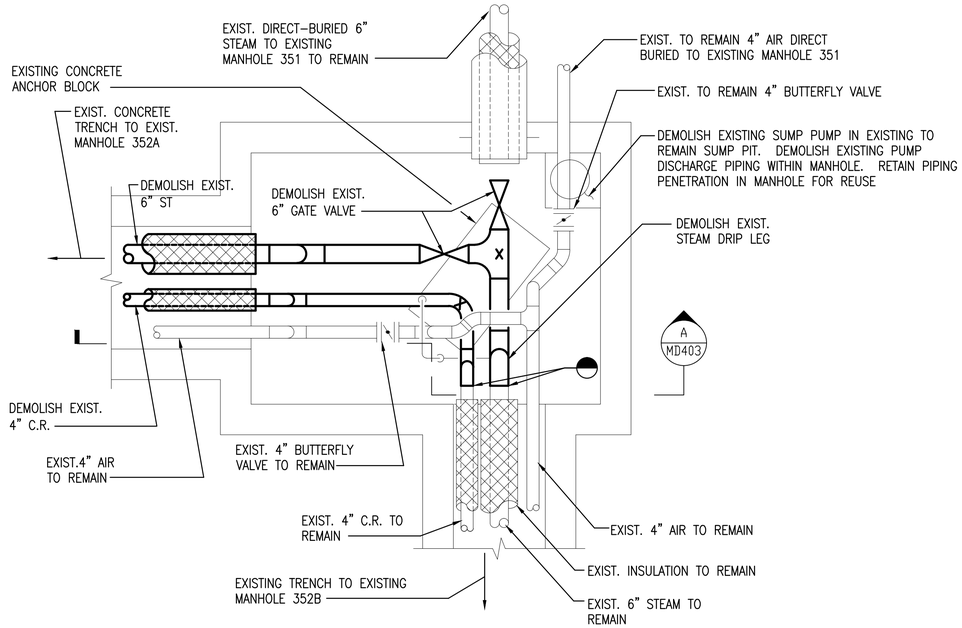

PLAN

SCALE: N.T.S

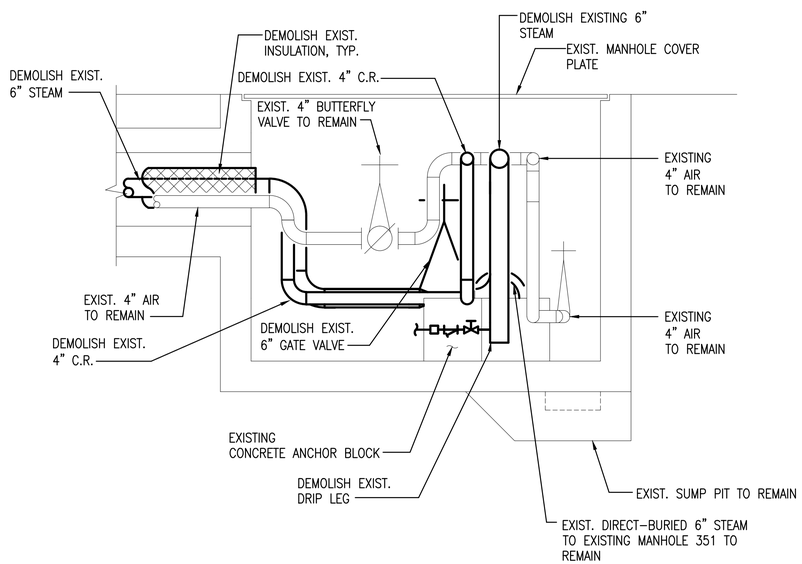

SECTION A

SCALE: NTS MD403

EXISTING MANHOLE 352 - DEMOLITION A1

SCALE: NTS M102

GENERAL SHEET NOTES

1. SEE SHEET G002 AND M001 FOR LEGEND, ABBREVIATIONS, AND GENERAL NOTES.

SYM	DESCRIPTION	DATE	APPR
0	ISSUE OF BID DOCUMENT	01/14/2016	JPC

NAVFAC

COMMONWEALTH OF VIRGINIA
JOHN PATRICK CASTELLAZZETTI, JR.
Lic. No 043782
01-14-2016
PROFESSIONAL ENGINEER
SEAL

BURNS McDONNELL

A/E INFO

APPROVED

FOR COMMANDER NAVFAC

ACTIVITY

SATISFACTORY TO DATE

DES A/E DRW FP CHK A/E

PM/DM ROGER ROY

BRANCH MANAGER NATHAN MAHER

FEAD/PM&E AMIN BAHROUR PM&E

FIRE PROTECTION X

DEPARTMENT OF THE NAVY
NAVAL FACILITIES ENGINEERING COMMAND
PUBLIC WORKS DEPARTMENT – MAINE
NAVAL FACILITIES ENGINEERING COMMAND ~ MID-ATLANTIC
NAVAL SHIPYARD – PORTSMOUTH, NH
PORTSMOUTH NAVAL SHIPYARD, KITTERY, MAINE

RMe REPAIR STEAM AND CONDENSATE CENTER LOOP, RM14–0206

STEAM MANHOLES PIPING–DEMOLITION

EPROJECT NO.: 1370674

CONSTR. CONTR. NO. N40085-##-###-####

NAVFAC DRAWING NO. 12706407

SHEET 16 OF 31

MD403 MS-15-XXXX

DRAWFORM REVISION: 10 OCTOBER 2014

FILE NAME: \\bmcd\pfs\Clients\ANF\USNavy\MidAtl\85860_PNSY\FY16\BEM\Design\Mech\Sheets\1 – RM 14-0206 – Repair Steam and Condensate Center Loop\MD403.dwg LAYOUT NAME: MD403 PLOTTED: Monday, January 11, 2016 – 4:36pm USER: jrodriguez

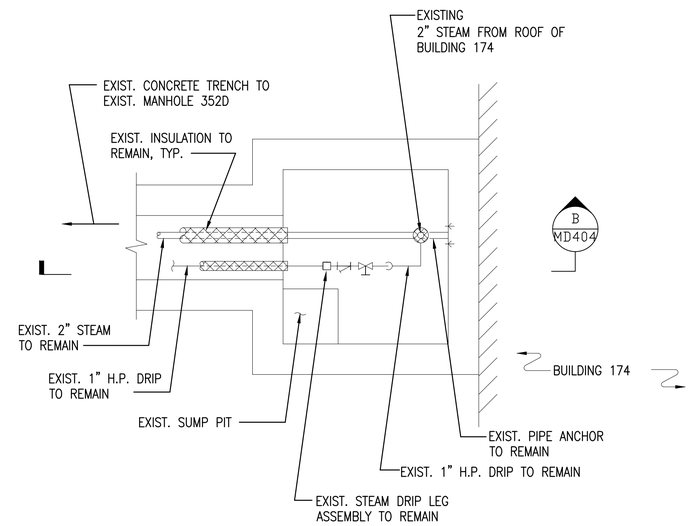

PLAN

SCALE: N.T.S

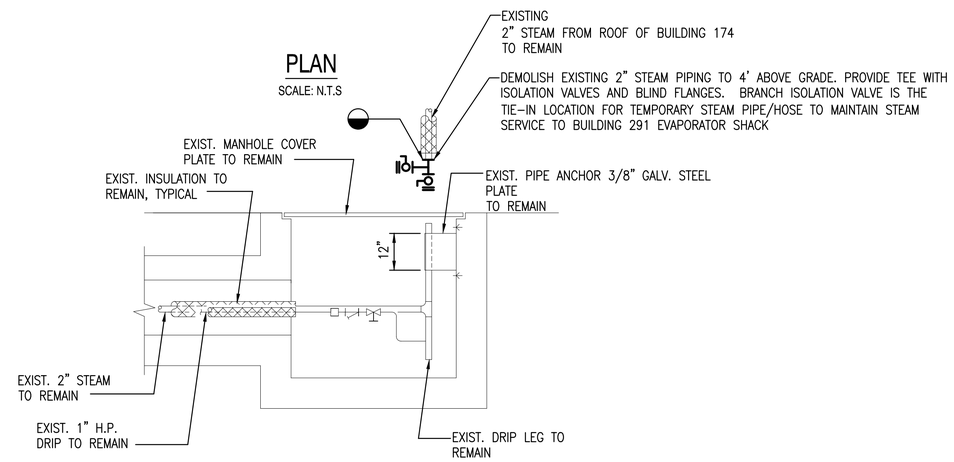

SECTION

SCALE: NTS MD404 B

EXISTING MANHOLE 352F - DEMOLITION

SCALE: NTS MD102 A3

GENERAL SHEET NOTES

1. SEE SHEET G002 AND M001 FOR LEGEND, ABBREVIATIONS, AND GENERAL NOTES.

SYM	DESCRIPTION	DATE	APPR
0	ISSUE OF BID DOCUMENT	01/14/2016	JPC

NAVFAC

COMMONWEALTH OF VIRGINIA
JOHN PATRICK CASTELVECCHI, JR.
Lic. No 043782
01-14-2016
PROFESSIONAL ENGINEER
SEAL

BURNS McDONNELL
A/E INFO

APPROVED
FOR COMMANDER NAVFAC
ACTIVITY
SATISFACTORY TO DATE
DES A/E DRW FP CHK A/E
PM/DM ROGER ROY
BRANCH MANAGER NATHAN MAHER
FEAD/PM&E AMIN BAHROUR PM&E
FIRE PROTECTION X

DEPARTMENT OF THE NAVY
NAVAL FACILITIES ENGINEERING COMMAND
NAVAL FACILITIES ENGINEERING COMMAND ~ MID-ATLANTIC
PUBLIC WORKS DEPARTMENT – MAINE
NAVAL SHIPYARD – PORTSMOUTH, NH
PORTSMOUTH NAVAL SHIPYARD
KITTERY, MAINE
RMe REPAIR STEAM AND CONDENSATE CENTER LOOP, RM14-0206
STEAM MANHOLES PIPING-DEMOLITION

EPROJECT NO.: 1370674
CONSTR. CONTR. NO. N40085-##-###-####
NAVFAC DRAWING NO. 12706408
SHEET 17 OF 31
MD404 MS-15-XXXX
DRAWFORM REVISION: 10 OCTOBER 2014

FILE NAME: \\bmcd\dfs\Clients\ANF\USNavy\MidAt\85860_PNSYFY16UEM\Design\Mech\Sheets\1 - RM 14-0206 - Repair Steam and Condensate Center Loop\MD404.dwg LAYOUT NAME: MD404 PLOTTED: Monday, January 11, 2016 - 4:37pm USER: jrodriguez

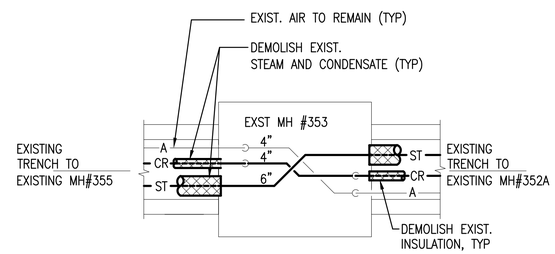

PLAN

SCALE: NTS

EXISTING MANHOLE 353 - DEMOLITION

SCALE: NTS

MD102 A4

GENERAL SHEET NOTES

1. SEE SHEET G002 AND M001 FOR LEGEND, ABBREVIATIONS, AND GENERAL NOTES.

SYM	DESCRIPTION	DATE	APPR
0	ISSUE OF BID DOCUMENT	01/14/2016	JPC

NAVFAC

COMMONWEALTH OF VIRGINIA
JOHN PATRICK CASTELVECCHI, JR.
Lic. No 043782
01-14-2016
PROFESSIONAL ENGINEER
SEAL

BURNS McDONNELL
A/E INFO

APPROVED
FOR COMMANDER NAVFAC
ACTIVITY
SATISFACTORY TO DATE

DES A/E	DRW FP	CHK A/E	
PM/DM	ROGER ROY		
BRANCH MANAGER	NATHAN MAHER		
FEAD/PM&E	AMIN BAHROUR PM&E		
FIRE PROTECTION	X		

DEPARTMENT OF THE NAVY
NAVAL FACILITIES ENGINEERING COMMAND
NAVAL FACILITIES ENGINEERING COMMAND ~ MID-ATLANTIC
PUBLIC WORKS DEPARTMENT – MAINE
NAVAL SHIPYARD – PORTSMOUTH, NH

PORTSMOUTH NAVAL SHIPYARD
KITTERY, MAINE
RMe REPAIR STEAM AND CONDENSATE
CENTER LOOP, RM14-0206

SECTIONS AND DETAILS – DEMOLITION

EPROJECT NO.: 1370674
CONSTR. CONTR. NO. N40085-##-###-####
NAVFAC DRAWING NO. 12706409
SHEET 18 OF 31
MD501 MS-15-XXXX
DRAWFORM REVISION: 10 OCTOBER 2014

FILE NAME: \\bmcd\dfs\Clients\ANF\USNavy\MidAt\85860_PNSY\Y16\EM\Design\Mech\Sheets\1 - RM 14-0206 - Repair Steam and Condensate Center Loop\MD501.dwg LAYOUT NAME: MD501 PLOTTED: Monday, January 11, 2016 - 4:30pm USER: jrodriguez

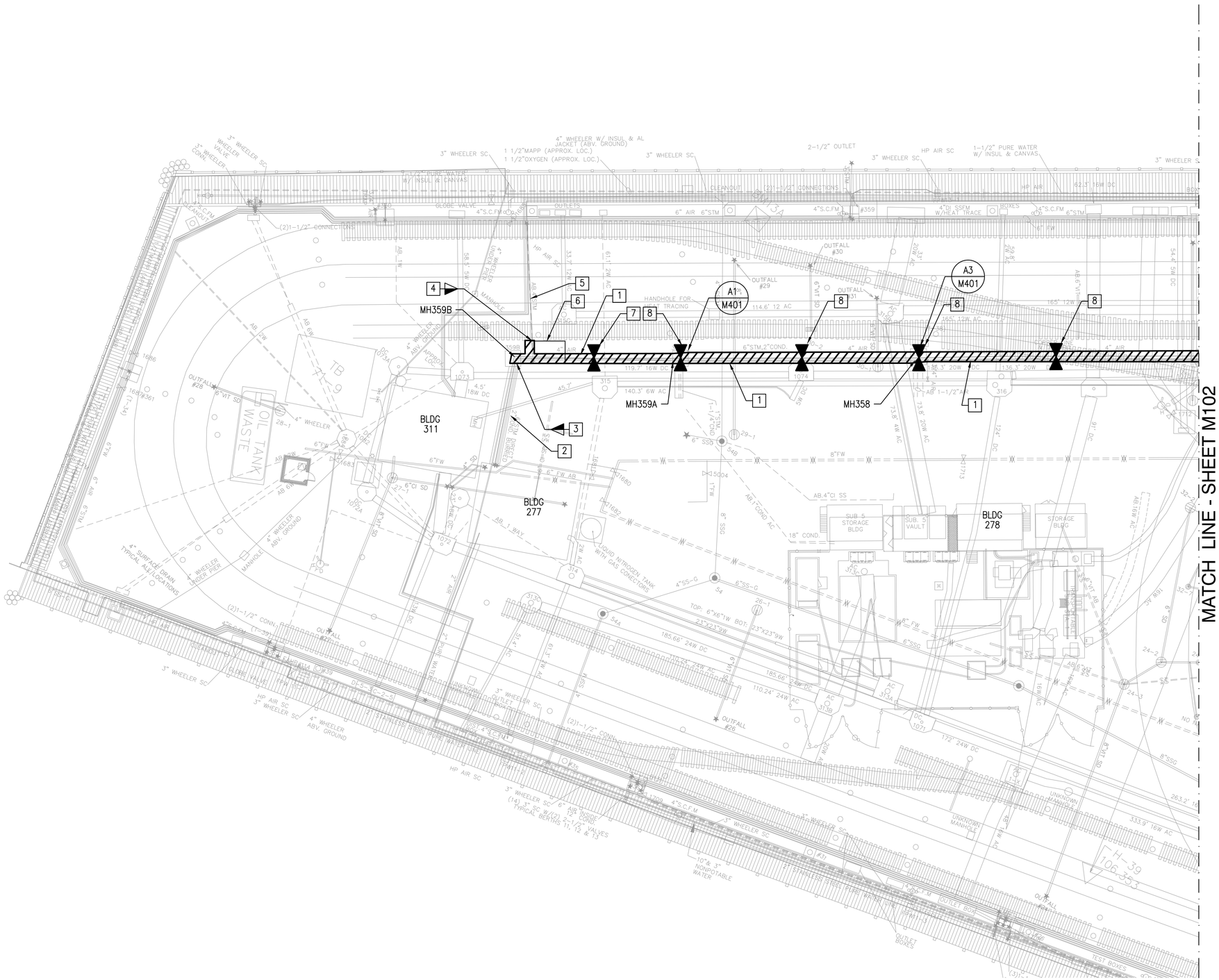

PIPING PLAN
SCALE: 1" = 20'

PLAN NORTH

GENERAL SHEET NOTES

1. SEE SHEET G002 AND M001 FOR LEGEND, ABBREVIATIONS, AND GENERAL NOTES.
2. PIPE ANCHOR LOCATIONS ARE INDICATED DIAGRAMMATICALLY, PRE-ENGINEERED PIPING MANUFACTURER SHALL SELECT FINAL ANCHOR LOCATIONS AND SHALL DESIGN ANCHORS FOR CALCULATED LOADS.
3. REPLACE RETAINED EXISTING TRENCH COVERS AFTER SUCCESSFUL TESTING, INSPECTION, AND EXAMINATIONS OF THE STEAM AND CONDENSATE PIPING IS COMPLETE AND ACCEPTED BY THE CONTRACTING OFFICER. STEAM AND CONDENSATE SHALL NOT BE CONCEALED UNTIL AFTER ACCEPTANCE.
4. EXISTING COMPRESSED AIR PIPING IN THE EXISTING TRENCHES SHALL REMAIN. PROTECT EXISTING COMPRESSED AIR PIPING AND COATING THROUGHOUT CONSTRUCTION. PROVIDE TEMPORARY HANGERS AS REQUIRED.
5. SEE M-500 SERIES FOR TYPICAL DETAILS.
6. SEE M-400 SERIES FOR SUMP PUMP REPLACEMENT LOCATIONS.

NEW WORK KEYNOTES

1. PROVIDE PRE-ENGINEERED 6" STEAM AND 2" CONDENSATE PIPING IN EXISTING TRENCH.
2. EXISTING 6" STEAM AND 2" CONDENSATE PIPING IN EXISTING TRENCH TO REMAIN.
3. CONNECT PRE-ENGINEERED STEAM AND CONDENSATE PIPING TO EXISTING PIPING.
4. CONNECT TO EXISTING 4" CONNECTION. PROVIDE ISOLATION VALVE ON BRANCH CONNECTION. PROVIDE ISOLATION VALVES ON MAINS IN MH359A AND MH359B.
5. EXISTING 4" STEAM CONNECTION TO REMAIN.
6. PROVIDE PRE-ENGINEERED 4" STEAM PIPING.
7. MAIN ANCHOR.
8. INTERMEDIATE ANCHOR.

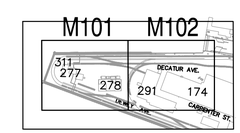

KEYPLAN
SCALE: N.T.S.

GRAPHIC SCALE

1" = 20'
20 10 0 20 40 60
scale feet
CHECK GRAPHIC SCALE BEFORE USING

SYM	DESCRIPTION	DATE	APPR
0	ISSUE OF BID DOCUMENT	01/14/2016	JPC

NAVFAC

COMMONWEALTH OF VIRGINIA
JOHN PATRICK CASTELVECCHI, JR.
Lic. No 043782
01-14-2016
PROFESSIONAL ENGINEER
SEAL

BURNS McDONNELL
A/E INFO

APPROVED
FOR COMMANDER NAVFAC
ACTIVITY
SATISFACTORY TO DATE
DES A/E DRW FP CHK A/E
PM/DM ROGER ROY
BRANCH MANAGER NATHAN MAHER
FEAD/PM&E AMIN BAHROUR PM&E
FIRE PROTECTION X

DEPARTMENT OF THE NAVY
NAVAL FACILITIES ENGINEERING COMMAND
NAVAL FACILITIES ENGINEERING COMMAND ~ MID-ATLANTIC
PUBLIC WORKS DEPARTMENT - MAINE
NAVAL SHIPYARD - PORTSMOUTH, NH
PORTSMOUTH NAVAL SHIPYARD
KITTERY, MAINE

RMe REPAIR STEAM AND CONDENSATE CENTER LOOP, RM14-0206

PIPING PLAN

EPROJECT NO.: 1370674
CONSTR. CONTR. NO. N40085-##-###-####
NAVFAC DRAWING NO. 12706410
SHEET 19 OF 31
M-101 MS-15-XXXX
DRAWFORM REVISION: 10 OCTOBER 2014

FILE NAME: \\bmcd\dfs\Clients\ANF\USNavy\MidAt\85860_PNSYFY16UEM\Design\Mech\Sheets\1 - RM 14-0206 - Repair Steam and Condensate Center Loop\M101.dwg LAYOUT NAME: M101 PLOTTED: Monday, January 11, 2016 - 4:31pm USER: jrodriguez

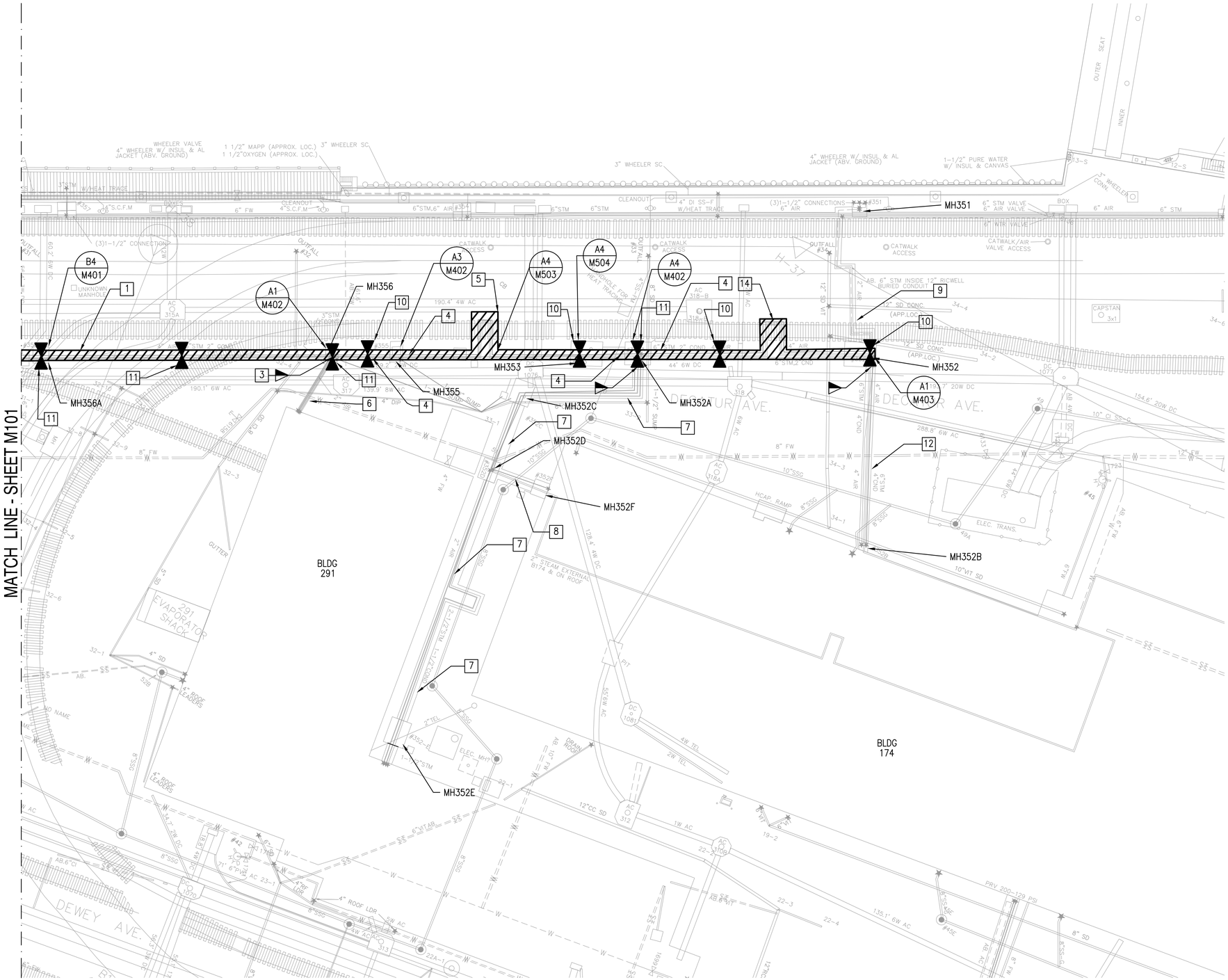

PIPING PLAN
SCALE: 1" = 20'

GENERAL SHEET NOTES

1. SEE SHEET G002 AND M001 FOR LEGEND, ABBREVIATIONS, AND GENERAL NOTES.
2. PIPE ANCHOR LOCATIONS ARE INDICATED DIAGRAMMATICALLY, PRE-ENGINEERED PIPING MANUFACTURER SHALL SELECT FINAL ANCHOR LOCATIONS AND SHALL DESIGN ANCHORS FOR CALCULATED LOADS.
3. REPLACE RETAINED EXISTING TRENCH COVERS AFTER SUCCESSFUL TESTING, INSPECTION, AND EXAMINATIONS OF THE STEAM AND CONDENSATE PIPING IS COMPLETE AND ACCEPTED BY THE CONTRACTING OFFICER. STEAM AND CONDENSATE SHALL NOT BE CONCEALED UNTIL AFTER ACCEPTANCE.
4. EXISTING COMPRESSED AIR PIPING IN THE EXISTING TRENCHES SHALL REMAIN. PROTECT EXISTING COMPRESSED AIR PIPING AND COATING THROUGHOUT CONSTRUCTION. PROVIDE TEMPORARY HANGERS AS REQUIRED.
5. SEE M-500 SERIES FOR TYPICAL DETAILS.
6. SEE M-400 SERIES FOR SUMP PUMP REPLACEMENT LOCATIONS.

NEW WORK KEYNOTES

1. PROVIDE PRE-ENGINEERED 6" STEAM AND 2" CONDENSATE PIPING IN EXISTING TRENCH.
2. NOT USED.
3. CONNECT PRE-ENGINEERED STEAM AND CONDENSATE PIPING AND BUILDING CONNECTION ISOLATION VALVES TO EXISTING STEAM AND CONDENSATE PIPING IN MANHOLE. SEE ENLARGED PLANS.
4. PROVIDE PRE-ENGINEERED 6" STEAM AND 4" CONDENSATE PIPING IN EXISTING TRENCH.
5. PROVIDE PRE-ENGINEERED STEAM AND CONDENSATE PIPING EXPANSION LOOP L-1. SEE SHEET M503 FOR DETAILS AND DIMENSIONS.
6. EXISTING 3" STEAM, (2) 2" STEAM, AND 2" CONDENSATE PIPING IN EXISTING TRENCH TO REMAIN.
7. EXISTING 2-1/2" STEAM AND 1-1/2" CONDENSATE PIPING IN EXISTING TRENCH TO REMAIN.
8. EXISTING 2" STEAM AND 1" HP DRIP PIPING IN EXISTING TRENCH TO REMAIN.
9. EXISTING 6" STEAM PIPING DIRECT BURIED TO EXISTING MANHOLE 351 TO REMAIN.
10. MAIN ANCHOR.
11. INTERMEDIATE ANCHOR.
12. EXISTING 6" STEAM AND 4" CONDENSATE PIPING IN EXISTING TRENCH TO REMAIN.
13. NOT USED.
14. PROVIDE PRE-ENGINEERED STEAM AND CONDENSATE EXPANSION LOOPS L-2. SEE SHEET M503 FOR DETAILS AND DIMENSIONS.

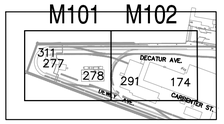

KEYPLAN
SCALE: N.T.S.

GRAPHIC SCALE

1" = 20'
20 10 0 20 40 60
scale feet
CHECK GRAPHIC SCALE BEFORE USING

SYM	DESCRIPTION	DATE	APPR
0	ISSUE OF BID DOCUMENT	01/14/2016	JPC

NAVFAC

COMMONWEALTH OF VIRGINIA
JOHN PATRICK CASTELVECCHI, JR.
Lic. No 043782
01-14-2016
PROFESSIONAL ENGINEER
SEAL

BURNS McDONNELL
A/E INFO

APPROVED
FOR COMMANDER NAVFAC
ACTIVITY
SATISFACTORY TO DATE
DES A/E DRW FP CHK A/E
PM/DM ROGER ROY
BRANCH MANAGER NATHAN MAHER
FEAD/PM&E AMIN BAHROUR PM&E
FIRE PROTECTION X

DEPARTMENT OF THE NAVY
NAVAL FACILITIES ENGINEERING COMMAND
NAVAL FACILITIES ENGINEERING COMMAND ~ MID-ATLANTIC
PUBLIC WORKS DEPARTMENT - MAINE
NAVAL SHIPYARD - PORTSMOUTH, NH
PORTSMOUTH NAVAL SHIPYARD
KITTERY, MAINE

RMe REPAIR STEAM AND CONDENSATE CENTER LOOP, RM14-0206

PIPING PLAN

EPROJECT NO.: 1370674
CONSTR. CONTR. NO. N40085-##-###-####
NAVFAC DRAWING NO. 12706411
SHEET 20 OF 31
M-102 MS-15-XXXX
DRAWFORM REVISION: 10 OCTOBER 2014

FILE NAME: \\bmcd\dfs\Clients\ANF\USNavy\MidAt\85860_PNSYFY16UEM\Design\Mech\Sheets\1 - RM 14-0206 - Repair Steam and Condensate Center Loop\M102.dwg LAYOUT NAME: M102 PLOTTED: Monday, January 11, 2016 - 4:32pm USER: jrodriguez

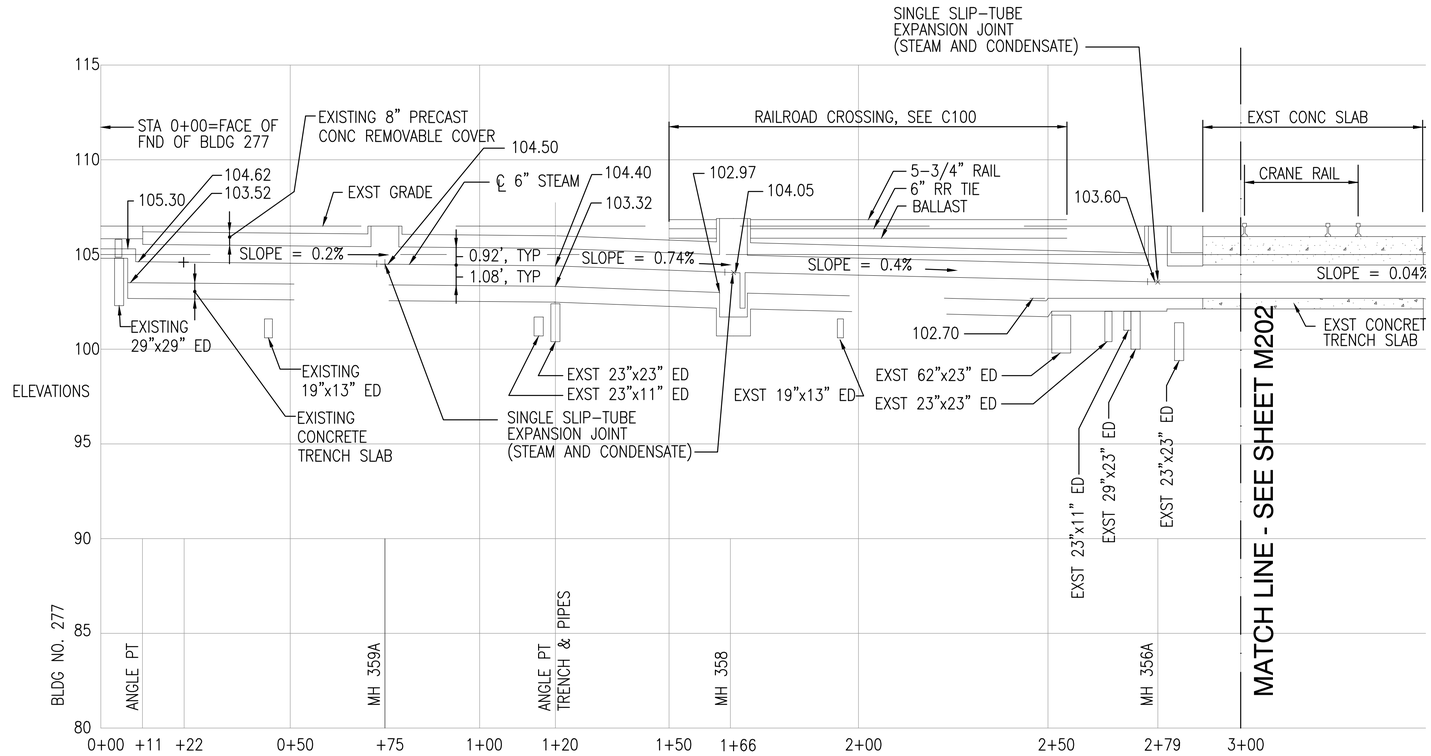

PROFILE LINE "A"

SCALE: HOR. 1"=20'
VERT. 1"=4'

GENERAL SHEET NOTES

1. SEE SHEET G002 AND M001 FOR LEGEND, ABBREVIATIONS, AND GENERAL NOTES.
2. SEE M-500 SERIES FOR TYPICAL DETAILS.
3. SEE M-400 SERIES FOR SUMP PUMP REPLACEMENT LOCATIONS.

GRAPHIC SCALE

1" = 4' 4 2 0 4 8 12 scale feet

1" = 20' 20 10 0 20 40 60 scale feet

CHECK GRAPHIC SCALE BEFORE USING

SYM	DESCRIPTION	DATE	APPR
0	ISSUE OF BID DOCUMENT	01/14/2016	JPC

NAVFAC

JOHN PATRICK CASTELVECCHI, JR. Lic. No 043782 01-14-2016 PROFESSIONAL ENGINEER

SEAL

BURNS McDONNELL

A/E INFO

APPROVED

FOR COMMANDER NAVFAC

ACTIVITY

SATISFACTORY TO DATE

DES A/E DRW FP CHK A/E

PM/DM ROGER ROY

BRANCH MANAGER NATHAN MAHER

FEAD/PM&E AMIN BAHROUR PM&E

FIRE PROTECTION X

DEPARTMENT OF THE NAVY
NAVAL FACILITIES ENGINEERING COMMAND
PUBLIC WORKS DEPARTMENT - MAINE
NAVAL FACILITIES ENGINEERING COMMAND ~ MID-ATLANTIC
NAVAL SHIPYARD - PORTSMOUTH, NH

PORTSMOUTH NAVAL SHIPYARD KITTERY, MAINE

RMe REPAIR STEAM AND CONDENSATE CENTER LOOP, RM14-0206

PROFILES

EPROJECT NO.: 1370674

CONSTR. CONTR. NO. N40085-##-###-####

NAVFAC DRAWING NO. 12706412

SHEET 21 OF 31

M-201 MS-15-XXXX

DRAWFORM REVISION: 10 OCTOBER 2014

FILE NAME: \\bmcd\dfs\Clients\ANF\USNavy\MidAt\85860_PNSFY16UEM\Design\Mech\Sheets\1 - RM 14-0206 - Repair Steam and Condensate Center Loop\M201.dwg LAYOUT NAME: M201 PLOTTED: Monday, January 11, 2016 - 4:32pm USER: jrodriguez

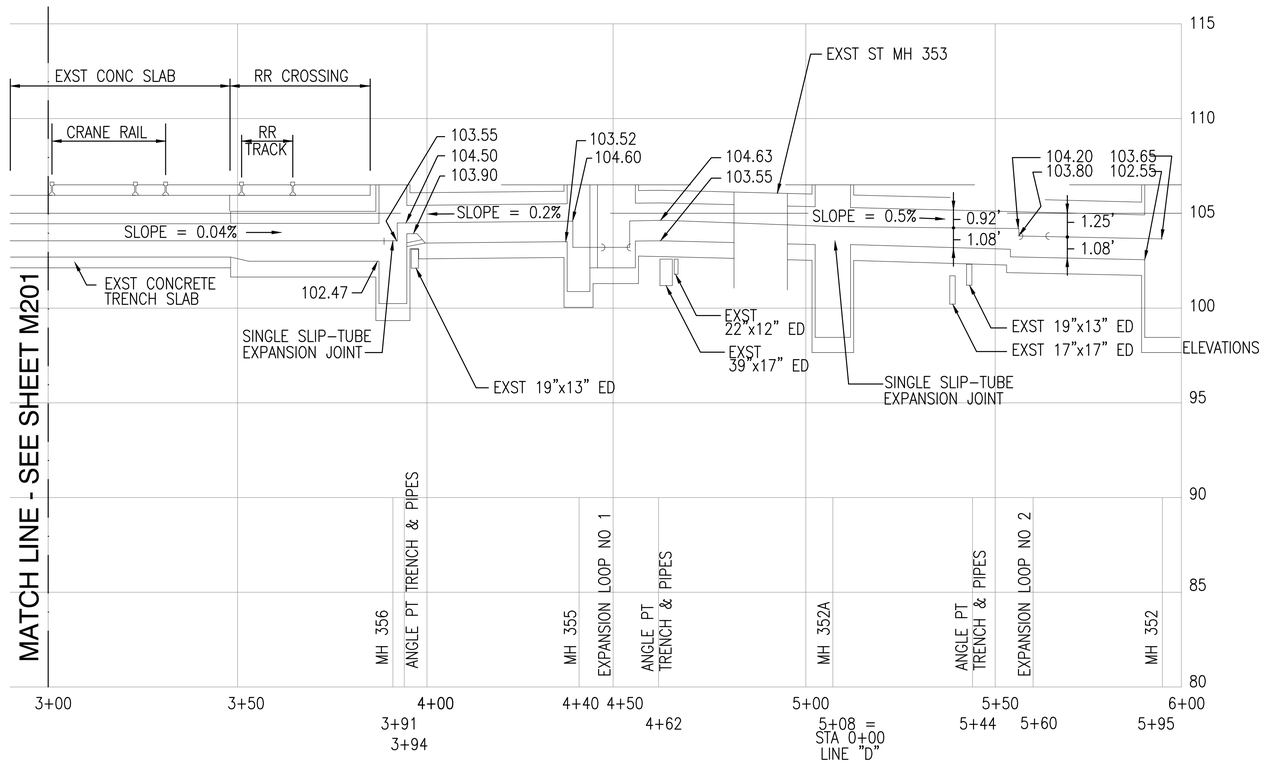

PROFILE LINE "A"

SCALE: HOR. 1"=20'
VERT. 1"=4'

GENERAL SHEET NOTES

1. SEE SHEET G002 AND M001 FOR LEGEND, ABBREVIATIONS, AND GENERAL NOTES.
2. SEE M-500 SERIES FOR TYPICAL DETAILS.
3. SEE M-400 SERIES FOR SUMP PUMP REPLACEMENT LOCATIONS.

GRAPHIC SCALE

1" = 4' 4 2 0 4 8 12 scale feet

1" = 20' 20 10 0 20 40 60 scale feet

CHECK GRAPHIC SCALE BEFORE USING

SYM	DESCRIPTION	DATE	APPR
0	ISSUE OF BID DOCUMENT	01/14/2016	JPC

NAVFAC

COMMONWEALTH OF VIRGINIA
JOHN PATRICK CASTELVECCHI, JR.
Lic. No 043782
01-14-2016
PROFESSIONAL ENGINEER
SEAL

BURNS McDONNELL

A/E INFO

APPROVED

FOR COMMANDER NAVFAC

ACTIVITY

SATISFACTORY TO DATE

DES A/E DRW FP CHK A/E
PM/DM ROGER ROY
BRANCH MANAGER NATHAN MAHER
FEAD/PM&E AMIN BAHROUR PM&E
FIRE PROTECTION X

DEPARTMENT OF THE NAVY
NAVAL FACILITIES ENGINEERING COMMAND
PUBLIC WORKS DEPARTMENT – MAINE
NAVAL FACILITIES ENGINEERING COMMAND – MID-ATLANTIC
NAVAL SHIPYARD – PORTSMOUTH, NH
KITTERY, MAINE
PORTSMOUTH NAVAL SHIPYARD
RMe REPAIR STEAM AND CONDENSATE CENTER LOOP, RM14-0206

PROFILES

EPROJECT NO.: 1370674
CONSTR. CONTR. NO. N40085-##-###-####
NAVFAC DRAWING NO. 12706413
SHEET 22 OF 31

M-202 MS-15-XXXX

DRAWFORM REVISION: 10 OCTOBER 2014

FILE NAME: \\bmcd\dfs\Clients\ANF\USNavy\MidAt\85860_PNSY\Y16\EM\Design\Mech\Sheets\1 - RM 14-0206 - Repair Steam and Condensate Center Loop\M202.dwg LAYOUT NAME: M202 PLOTTED: Monday, January 11, 2016 - 4:32pm USER: jrodriguez

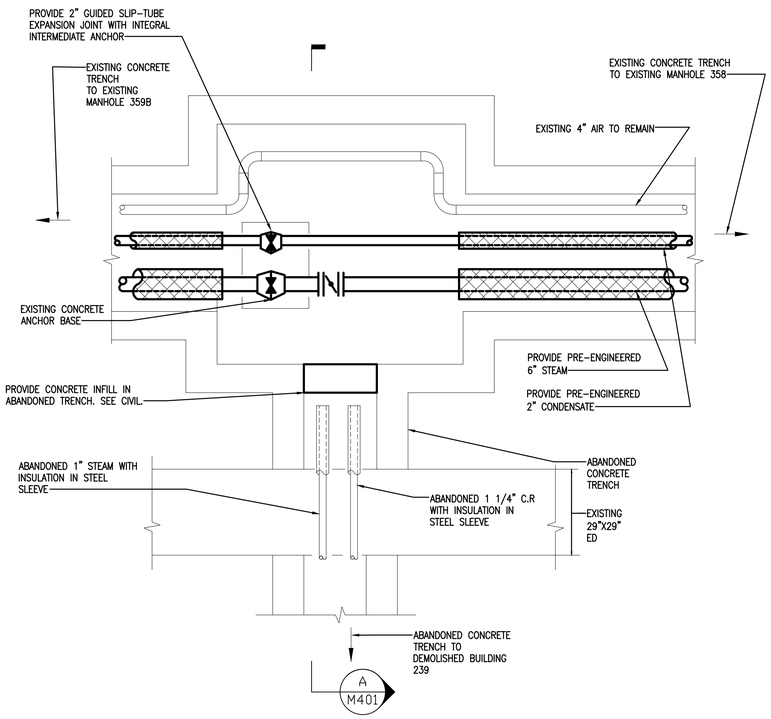

PLAN
SCALE: NTS

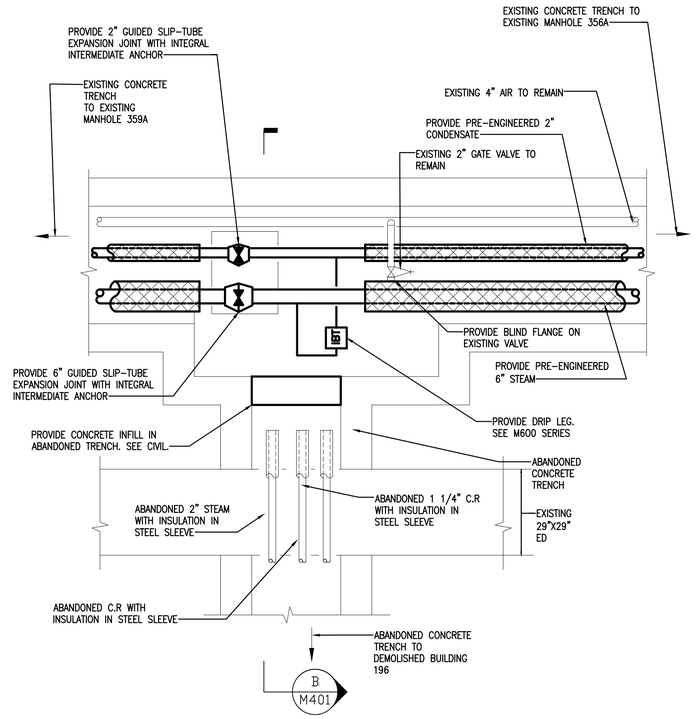

PLAN
SCALE: NTS

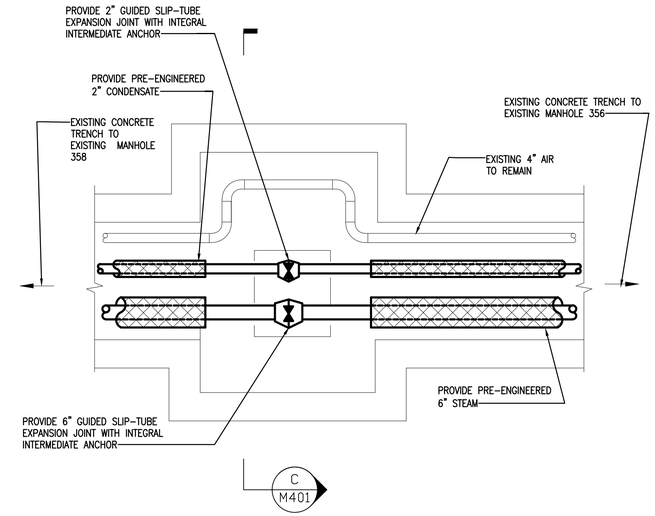

PLAN
SCALE: NTS

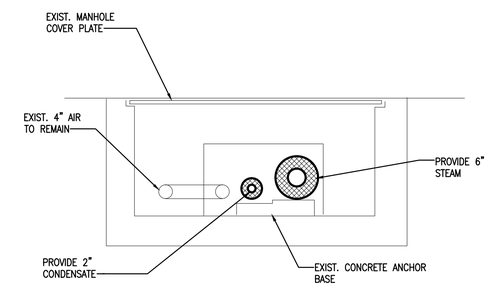

SECTION
SCALE: NTS — M401 — C

EXISTING MANHOLE 356A
SCALE: NTS — M102 — B4

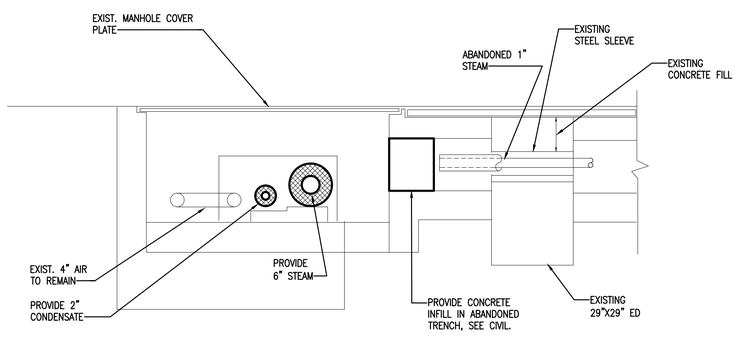

SECTION
SCALE: NTS — M401 — A

EXISTING MANHOLE 359A
SCALE: NTS — M101 — A1

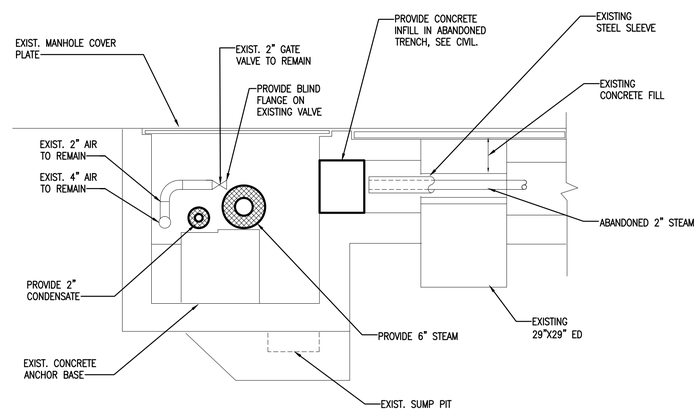

SECTION
SCALE: NTS — M401 — B

EXISTING MANHOLE 358
SCALE: NTS — M101 — A3

GENERAL SHEET NOTES

1. SEE SHEET G002 AND M001 FOR LEGEND, ABBREVIATIONS AND GENERAL NOTES.
2. SEE M600 SERIES FOR DEMARCATION BETWEEN PRE-ENGINEERED STEAM/CONDENSATE PIPING AND FIELD INSULATED STEAM/CONDENSATE PIPING.

SYM	DESCRIPTION	DATE	APPR
0	ISSUE OF BID DOCUMENT	01/14/2016	JPC

NAVFAC

COMMONWEALTH OF VIRGINIA — JOHN PATRICK CASTELLAZZETTI, JR. — Lic. No 043782 — 01-14-2016 — PROFESSIONAL ENGINEER — SEAL

BURNS McDONNELL

A/E INFO.

APPROVED

FOR COMMANDER NAVFAC

ACTIVITY

SATISFACTORY TO DATE

DES A/E | DRW FP | CHK A/E

PM/DM ROGER ROY

BRANCH MANAGER NATHAN MAHER

FEAD/PM&E AMIN BAHROUR PM&E

FIRE PROTECTION X

DEPARTMENT OF THE NAVY
NAVAL FACILITIES ENGINEERING COMMAND
PUBLIC WORKS DEPARTMENT – MAINE
NAVAL FACILITIES ENGINEERING COMMAND ~ MID-ATLANTIC
NAVAL SHIPYARD – PORTSMOUTH, NH
PORTSMOUTH NAVAL SHIPYARD, KITTERY, MAINE

RMe REPAIR STEAM AND CONDENSATE CENTER LOOP, RM14-0206

STEAM MANHOLES PIPING

EPROJECT NO.: 1370674

CONSTR. CONTR. NO. N40085-##-###-####

NAVFAC DRAWING NO. 12706414

SHEET 23 OF 31

M-401 | MS-15-XXXX

DRAWFORM REVISION: 10 OCTOBER 2014

FILE NAME: \\bmcr\pfs\Clients\ANF\USNavy\M04N\85860_PNSY\FY16\CEM\Design\Mech\Sheets\1 - RM 14-0206 - Repair Steam and Condensate Center Loop\M401.dwg LAYOUT NAME: M401 PLOTTED: Monday, January 11, 2016 - 4:32pm USER: jrodriguez

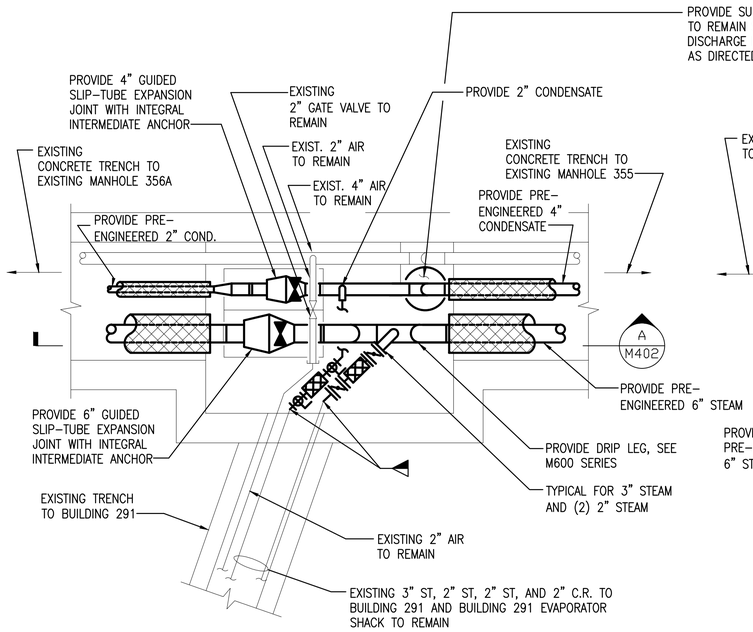

PLAN
SCALE: NTS

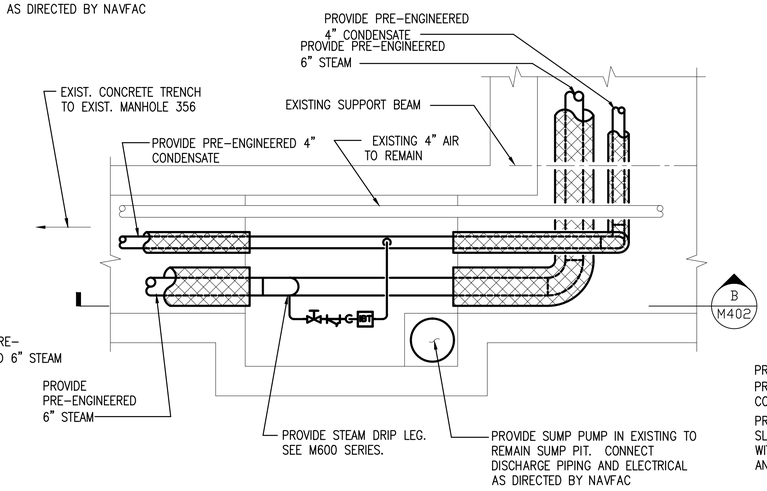

PLAN
SCALE: NTS

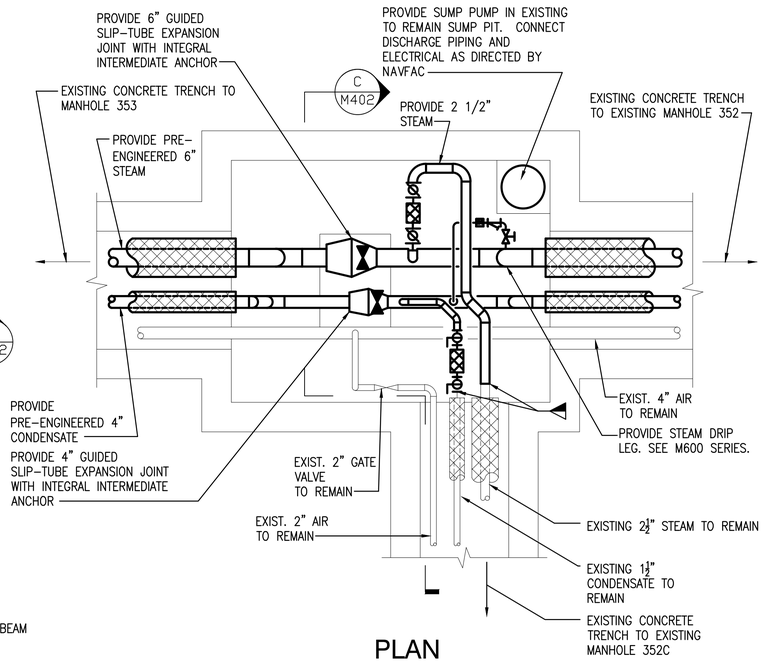

PLAN
SCALE: NTS

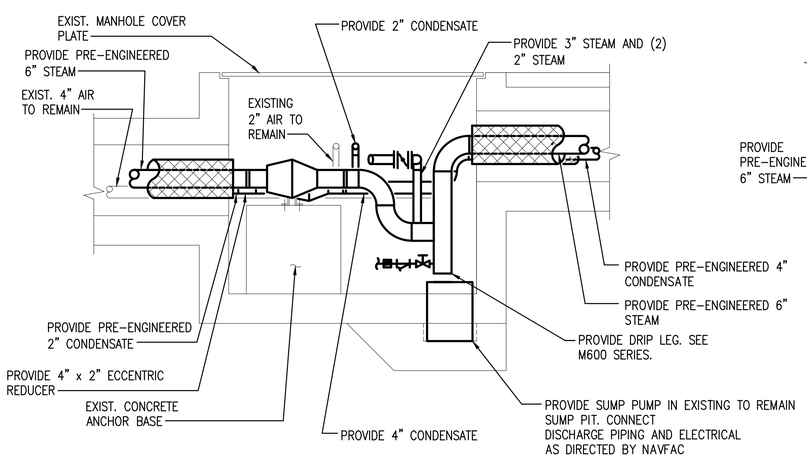

SECTION
SCALE: NTS M402 (A)

EXISTING MANHOLE 356
SCALE: NTS M102 (A1)

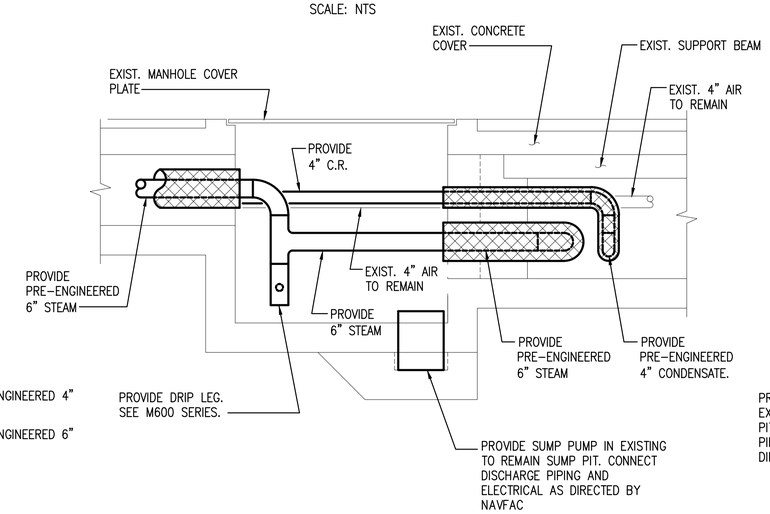

SECTION
SCALE: NTS M402 (B)

EXISTING MANHOLE 355
SCALE: NTS M102 (A3)

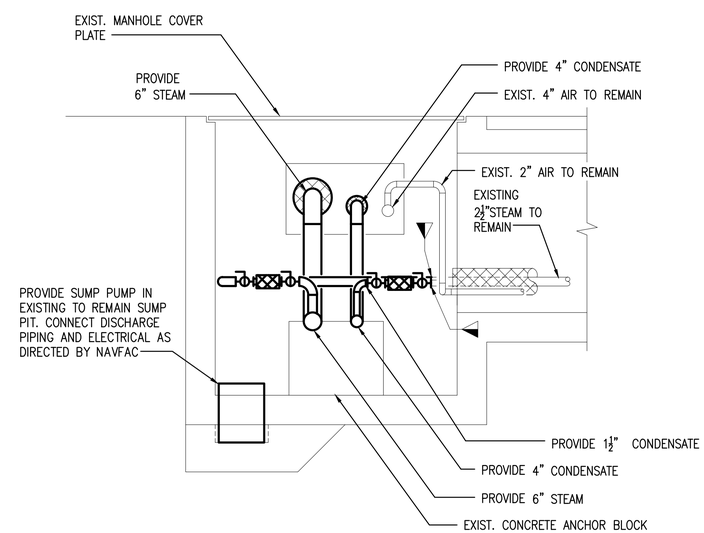

SECTION
SCALE: NTS M402 (C)

EXISTING MANHOLE 352A
SCALE: NTS M102 (A4)

GENERAL SHEET NOTES

1. SEE SHEET G002 AND M001 FOR LEGEND, ABBREVIATIONS AND GENERAL NOTES.
2. SEE M600 SERIES FOR DEMARCATION BETWEEN PRE-ENGINEERED STEAM/CONDENSATE PIPING AND FIELD INSULATED STEAM/CONDENSATE PIPING.

SYM	DESCRIPTION	DATE	APPR
0	ISSUE OF BID DOCUMENT	01/14/2016	JPC

NAVFAC

COMMONWEALTH OF VIRGINIA
JOHN PATRICK CASTELLAZZETTI, JR.
Lic. No 043782
01-14-2016
PROFESSIONAL ENGINEER
SEAL

BURNS McDONNELL

A/E INFO

APPROVED
FOR COMMANDER NAVFAC
ACTIVITY
SATISFACTORY TO DATE

DES A/E	DRW FP	CHK A/E
PM/DM	ROGER ROY	
BRANCH MANAGER	NATHAN MAHER	
FEAD/PM&E	AMIN BAHROUR PM&E	
FIRE PROTECTION	X	

DEPARTMENT OF THE NAVY
NAVAL FACILITIES ENGINEERING COMMAND
PUBLIC WORKS DEPARTMENT – MAINE
NAVAL FACILITIES ENGINEERING COMMAND ~ MID-ATLANTIC
NAVAL SHIPYARD – PORTSMOUTH, NH
KITTERY, MAINE
PORTSMOUTH NAVAL SHIPYARD
RMe REPAIR STEAM AND CONDENSATE CENTER LOOP, RM14-0206

STEAM MANHOLES PIPING

EPROJECT NO.: 1370674
CONSTR. CONTR. NO. N40085-##-###-####
NAVFAC DRAWING NO. 12706415
SHEET 24 OF 31

M-402 | MS-15-XXXX

DRAWFORM REVISION: 10 OCTOBER 2014

FILE NAME: \\pnocfs\Clients\ANF\USNavy\MidA\85860_PNSY FY16\EM\Design\Mech\Sheets\1 – RM 14-0206 – Repair Steam and Condensate Center Loop\M402.dwg LAYOUT NAME: M402 PLOTTED: Monday, January 11, 2016 – 4:33pm USER: jrodriguez

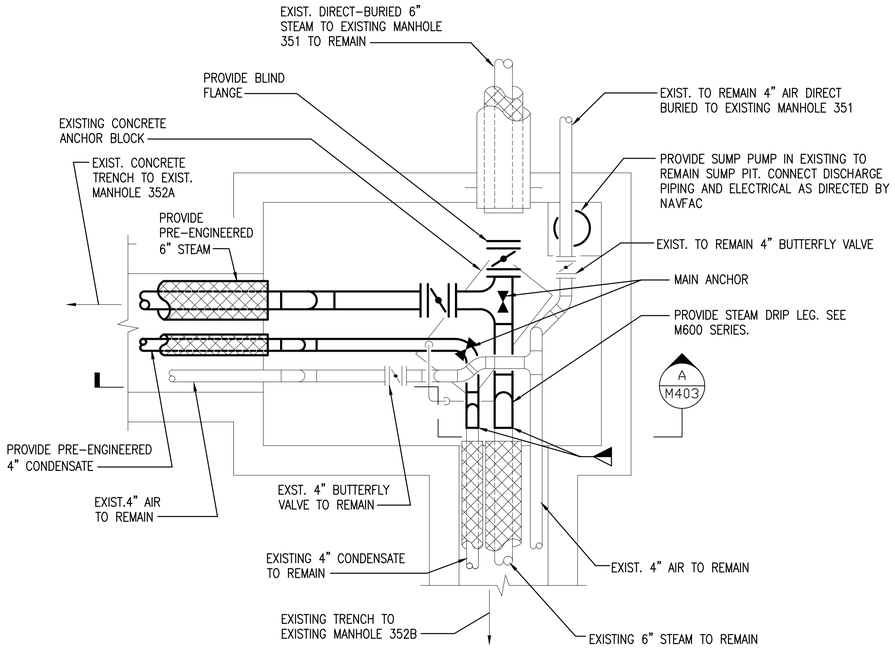

PLAN

SCALE: NTS

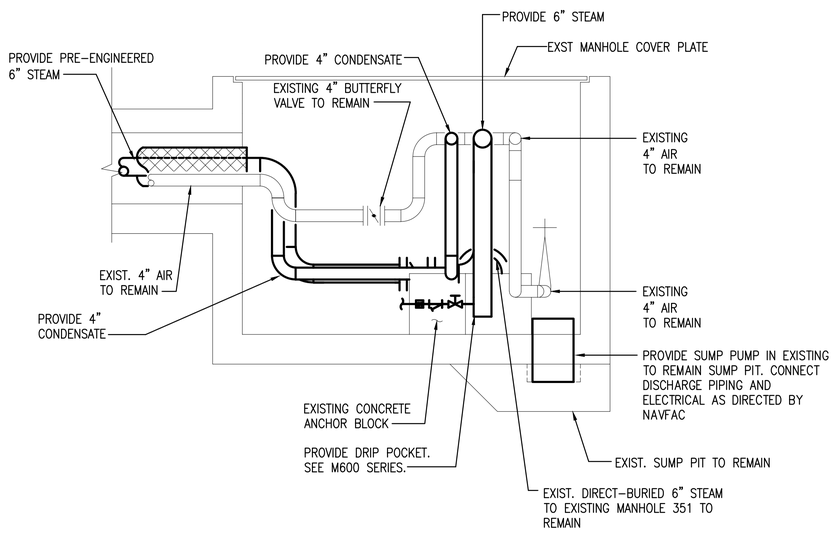

SECTION

SCALE: NTS M403 A

EXISTING MANHOLE 352

SCALE: NTS M102 A1

GENERAL SHEET NOTES

1. SEE SHEET G002 AND M001 FOR LEGEND, ABBREVIATIONS AND GENERAL NOTES.
2. SEE M600 SERIES FOR DEMARCATION BETWEEN PRE-ENGINEERED STEAM/CONDENSATE PIPING AND FIELD INSULATED STEAM/CONDENSATE PIPING.

SYM	DESCRIPTION	DATE	APPR
0	ISSUE OF BID DOCUMENT	01/14/2016	JPC

NAVFAC

COMMONWEALTH OF VIRGINIA
JOHN PATRICK CASTELVECCHI, JR.
Lic. No 043782
01-14-2016
PROFESSIONAL ENGINEER
SEAL

BURNS McDONNELL
A/E INFO.

APPROVED
FOR COMMANDER NAVFAC
ACTIVITY
SATISFACTORY TO DATE
DES A/E DRW FP CHK A/E
PM/DM ROGER ROY
BRANCH MANAGER NATHAN MAHER
FEAD/PM&E AMIN BAHROUR PM&E
FIRE PROTECTION X

DEPARTMENT OF THE NAVY
NAVAL FACILITIES ENGINEERING COMMAND
PUBLIC WORKS DEPARTMENT – MAINE
NAVAL FACILITIES ENGINEERING COMMAND ~ MID-ATLANTIC
NAVAL SHIPYARD – PORTSMOUTH, NH
PORTSMOUTH NAVAL SHIPYARD KITTERY, MAINE
RMe REPAIR STEAM AND CONDENSATE CENTER LOOP, RM14-0206
STEAM MANHOLES PIPING

EPROJECT NO.: 1370674
CONSTR. CONTR. NO. N40085-##-###-####
NAVFAC DRAWING NO. 12706416
SHEET 25 OF 31
M-403 MS-15-XXXX
DRAWFORM REVISION: 10 OCTOBER 2014

FILE NAME: \\bmcd\dfs\Clients\ANF\USNavy\MidAt\85860_PNSYFY16\EM\Design\Mech\Sheets\1 - RM 14-0206 - Repair Steam and Condensate Center Loop\M403.dwg LAYOUT NAME: M403 PLOTTED: Monday, January 11, 2016 - 4:33pm USER: jrodriguez

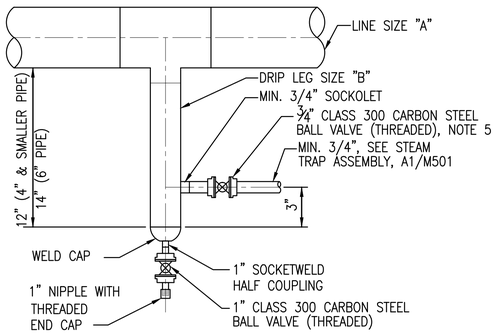

SIZE SCHEDULE	
LINE "A"	POCKET "B"
UP TO 4"	LINE SIZE
4" & 6"	4"

NOTES:

1. PROVIDE DRIP LEG FOR ALL STEAM RISERS, END OF MAINS, AND RUN OF MAINS WHERE INDICATED OR REQUIRED.
2. STATIC HEAD: CONDENSATE PIPING SHALL POSITIVELY DRAIN AND SLOPE DOWNWARD TO STEAM TRAP. STEAM TRAP SHALL BE INSTALLED BELOW STEAM HEADER
3. LOCATE AT 100 TO 300 FEET INTERVAL (MAXIMUM) ON ALL STEAM SERVICE LINES UNLESS NOTED OTHERWISE.
4. TEE DRIP LEG ASSEMBLIES SHALL BE PROVIDED WHERE STEAM LINES OFFSET VERTICALLY UP IN THE DIRECTION OF FLOW.
5. LOCATE ISOLATION VALVE WITHIN 6 INCHES OF DRIP LEG CONNECTION WHILE PROVIDING ENOUGH SPACE FOR REQUIRED INSULATION.

TYPICAL DRIP LEG DETAIL

SCALE: NTS — M501 — B1

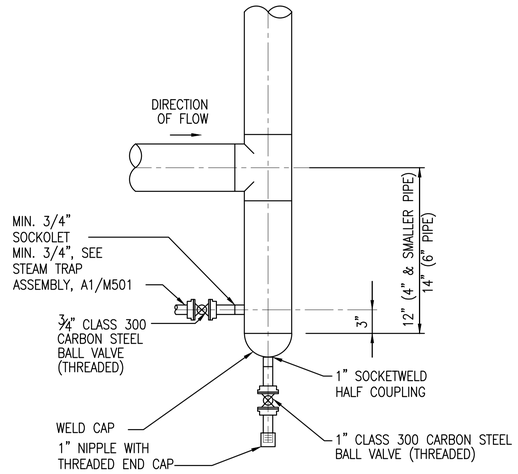

NOTE: LOCATE ISOLATION VALVE WITHIN 6 INCHES OF DRIP LEG CONNECTION WHILE PROVIDING ENOUGH SPACE FOR REQUIRED INSULATION.

TYPICAL TEE DRIP LEG ASSEMBLY DETAIL

SCALE: NTS — M501 — C2

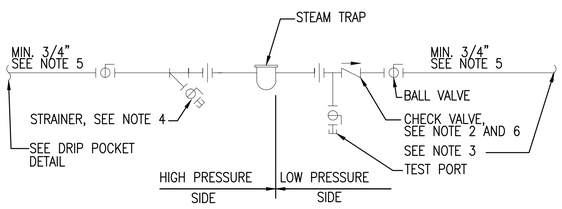

NOTES:

1. PIPING, VALVES AND FITTINGS SHALL BE AS SPECIFIED FOR EACH SYSTEM.
2. PROVIDE CHECK VALVE ONLY WHERE CONDENSATE RETURN MAIN OR HEADER IS ABOVE TRAP DISCHARGE.
3. PIPE TRAP DISCHARGE TO CONDENSATE RETURN MAIN OR TRAP DISCHARGE HEADER OR AS INDICATED.
4. SEPARATE STRAINER (WITH BLOWDOWN VALVE, NIPPLE & CAP) NOT REQUIRED IF STRAINER IS INTEGRAL WITH TRAP.
5. FOR TRAP CONNECTION SIZES, PIPE SIZES, AND ADDITIONAL REQUIREMENTS SEE DRAWINGS AND STEAM TRAP SCHEDULE.
6. WHERE TRAP VALVE STATIONS (TVS) ARE SCHEDULED AND INDICATED, LOCATE CHECK VALVE DOWNSTREAM OF TVS WITH BALL VALVE AFTER AND UNION BEFORE CHECK VALVE.

TYPICAL STEAM TRAP DETAIL

SCALE: NTS — M501 — A1

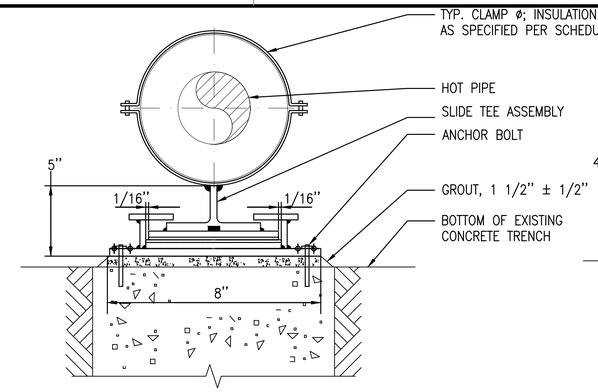

GUIDE DETAIL-AXIAL VIEW

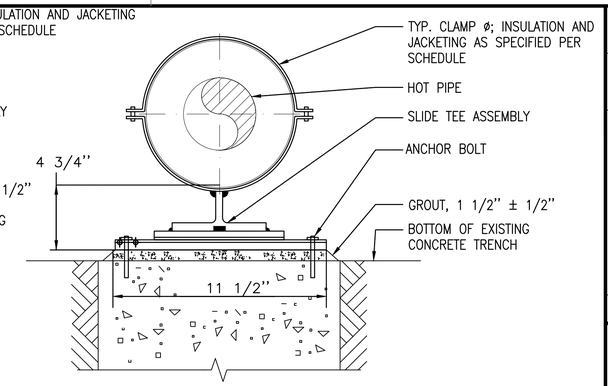

SUPPORT DETAIL-AXIAL VIEW

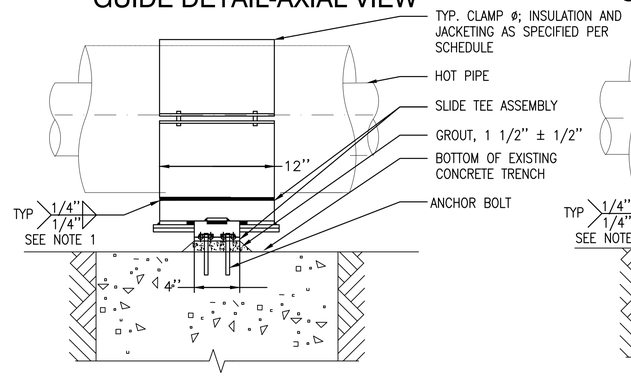

GUIDE DETAIL-SIDE VIEW

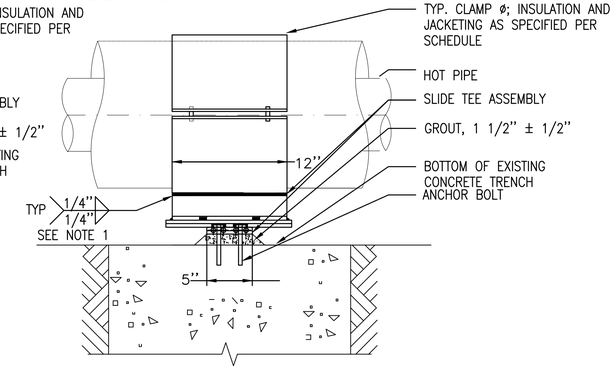

SUPPORT DETAIL-SIDE VIEW

NOTES:

1. FACTORY WELDS
2. ENTIRE PIPE SUPPORT ASSEMBLY SHALL BE PROVIDED BY CONTRACTOR.
3. FINISH SHALL BE HOT-DIP GALVANIZED (WELDED AFTER GALVANIZING AND COLD SPRAY TOUCHED-UP.

PRE-ENGINEERED PIPING, GUIDE, AND SPACING SCHEDULE

	1" COND.	1.5" COND.	2" COND.	2" STEAM	2.5" STEAM	3" STEAM	3" COND.	4" COND.	6" STEAM
CARRIER DIAM (IN.) (CARBON STEEL)	1.00	1.50	2.00	2.00	2.50	3.00	3.00	4.00	6.00
CARRIER INSULATION (AEROGEL)	0.20	0.20	0.20	1.60	1.80	1.80	0.40	0.40	2.40
AIR GAP THICKNESS (IN.)	1.30	2.00	1.80	1.40	1.00	1.70	1.5	1.50	1.20
CONDUIT DIAM. (IN.) (BLACK STEEL)	4.50	6.63	6.63	8.63	8.63	10.75	7.63	8.63	14.00
POLYURETHANE THICKNESS (IN.)	1.00	1.00	1.00	1.00	1.00	1.00	1.00	1.00	1.00
TOTAL PIPE OD (IN.) (APPROX. HDPE JACKET)	7.00	9.00	9.00	11.00	11.00	13.20	10.00	11.00	16.50
EXPANSION JOINT FIRST GUIDE SPACINGS (FT.)	2.00	2.00	2.00	2.00	2.50	3.00	3.00	4.00	6.00
EXPANSION JOINT INTERMEDIATE GUIDE SPACINGS (FT.)	5.50	8.00	10.50	10.50	13.50	16.00	16.00	20.00	29.00
SUPPORT SPACING (FT.)	7.00	9.00	10.00	13.00	14.00	15.00	15.00	14.00	21.00

GUIDES & SUPPORTS: MSS SP-58 TYPE 42 (CLAMP) AND TYPE 35. GUIDES MUST BE INSTALLED AT THE GIVEN SPACINGS FROM BOTH FACES OF EACH EXPANSION JOINT.

TYPICAL PIPE GUIDE AND SUPPORT DETAILS

SCALE: NTS — M501 — A4

GENERAL SHEET NOTES

1. SEE SHEET G002 AND M001 FOR LEGEND, ABBREVIATIONS AND GENERAL NOTES.

SYM	DESCRIPTION	DATE	APPR
0	ISSUE OF BID DOCUMENT	01/14/2016	JPC

NAVFAC

COMMONWEALTH OF VIRGINIA — JOHN PATRICK CASTELLAZZETTI, JR. — Lic. No 043782 — 01-14-2016 — PROFESSIONAL ENGINEER — SEAL

BURNS McDONNELL — A/E INFO

APPROVED

FOR COMMANDER NAVFAC

ACTIVITY

SATISFACTORY TO DATE

DES A/E | DRW FP | CHK A/E

PM/DM ROGER ROY

BRANCH MANAGER NATHAN MAHER

FEAD/PM&E AMIN BAHROUR PM&E

FIRE PROTECTION X

DEPARTMENT OF THE NAVY
NAVAL FACILITIES ENGINEERING COMMAND
PUBLIC WORKS DEPARTMENT – MAINE
PORTSMOUTH NAVAL SHIPYARD

NAVAL FACILITIES ENGINEERING COMMAND ~ MID-ATLANTIC
NAVAL SHIPYARD – PORTSMOUTH, NH
KITTERY, MAINE

RMe REPAIR STEAM AND CONDENSATE CENTER LOOP, RM14-0206

DETAILS

EPROJECT NO.: 1370674

CONSTR. CONTR. NO. N40085-##-###-####

NAVFAC DRAWING NO. 12706417

SHEET 26 OF 31

M-501 | MS-15-XXXX

DRAWFORM REVISION: 10 OCTOBER 2014

FILE NAME: \\bmcs\pfs\Clients\ANF\USNavy\M04N\85860_PNSY\FY16\EM\Design\Mech\Sheets\1 – RM 14-0206 – Repair Steam and Condensate Center Loop\M501.dwg LAYOUT NAME: M501 PLOTTED: Monday, January 11, 2016 – 4:33pm USER: jrodriguez

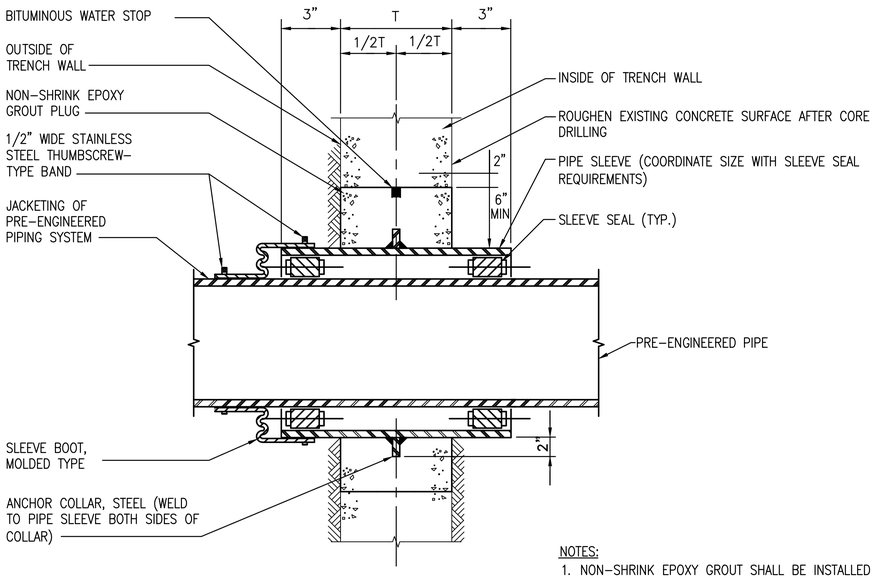

NOTES:
1. NON-SHRINK EPOXY GROUT SHALL BE INSTALLED AFTER PIPE AND SLEEVE ASSEMBLY HAS BEEN INSTALLED.

TYPICAL CONCRETE WALL PENETRATION DETAIL (B1)

SCALE: NTS M502

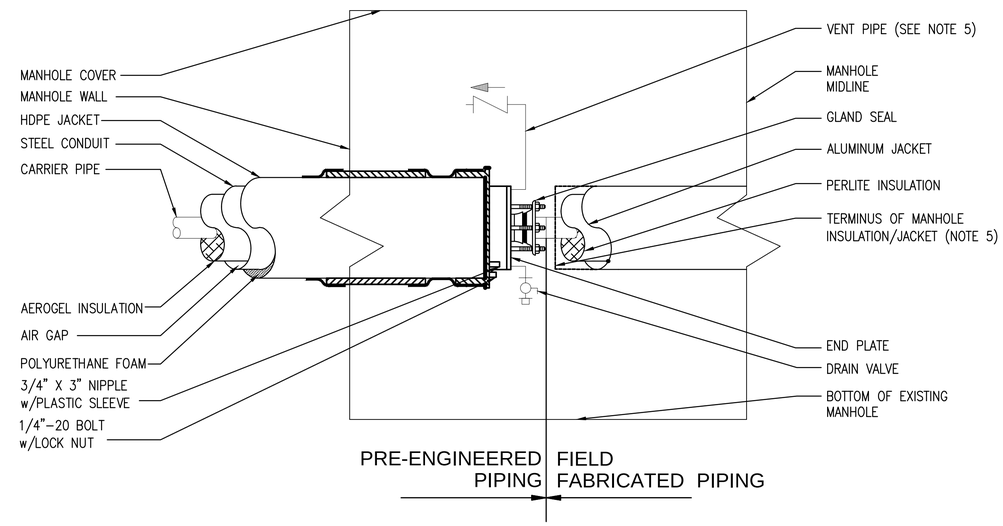

NOTE:
1. MANHOLE OUTLINE IS INDICATED DIAGRAMMATICALLY FOR REFERENCE ONLY.

2. VENT TO ATMOSPHERE TO PROTECT VENTS AND DRAINS FROM WATER INFILTRATION DURING CONSTRUCTION WITH THE USE OF PIPE PLUGS, CAPS, ETC.

3. OPEN DRAINS PRIOR TO START-UP AND CONFIRM WATER DOES NOT EXIST IN CONDUITS. IF WATER EXISTS IN THE CONDUITS, PROMPTLY INFORM CONTRACTING OFFICER. DURING CONSTRUCTION, CONTRACTOR SHALL PROTECT CONDUITS FROM WATER INFILTRATION WITH END SEALS, PLUGS, ETC. CLOSE DRAIN VALVES AFTER COMPLETION OF TESTING AND ACCEPTANCE.

4. INSTALL VENT CHECK VALVE IN A HORIZONTAL ORIENTATION AND TERMINATE VENT PIPE AT HIGHEST POINT POSSIBLE IN MANHOLES.

5. TERMINATE INSULATION ADJACENT TO PRE-ENGINEERED PIPING GLAND SEAL.

TYPICAL PRE-ENGINEERED TO FIELD FABRICATED PIPNG DETAIL (A4)

SCALE: NTS M502

GENERAL SHEET NOTES

1. SEE SHEET G002 AND M001 FOR LEGEND, ABBREVIATIONS AND GENERAL NOTES.

SYM	DESCRIPTION	DATE	APPR
0	ISSUE OF BID DOCUMENT	01/14/2016	JPC

NAVFAC

COMMONWEALTH OF VIRGINIA
JOHN PATRICK CASTELVECCHI, JR.
Lic. No 043782
01-14-2016
PROFESSIONAL ENGINEER
SEAL

BURNS McDONNELL
A/E INFO.

APPROVED
FOR COMMANDER NAVFAC
ACTIVITY
SATISFACTORY TO DATE
DES A/E DRW FP CHK A/E
PM/DM ROGER ROY
BRANCH MANAGER NATHAN MAHER
FEAD/PM&E AMIN BAHROUR PM&E
FIRE PROTECTION X

DEPARTMENT OF THE NAVY
NAVAL FACILITIES ENGINEERING COMMAND
PUBLIC WORKS DEPARTMENT – MAINE
NAVAL FACILITIES ENGINEERING COMMAND ~ MID-ATLANTIC
NAVAL SHIPYARD – PORTSMOUTH, NH
PORTSMOUTH NAVAL SHIPYARD
KITTERY, MAINE
RMe REPAIR STEAM AND CONDENSATE CENTER LOOP, RM14-0206
DETAILS

EPROJECT NO.: 1370674
CONSTR. CONTR. NO. N40085-##-###-####
NAVFAC DRAWING NO. 12706418
SHEET 27 OF 31
M-502 MS-15-XXXX
DRAWFORM REVISION: 10 OCTOBER 2014

FILE NAME: \\bmcd\dfs\Clients\ANF\USNavy\MidAt\85860_PNSYFY16UEM\Design\Mech\Sheets\1 - RM 14-0206 - Repair Steam and Condensate Center Loop\M502.dwg LAYOUT NAME: M502 PLOTTED: Monday, January 11, 2016 - 4:33pm USER: jrodriguez

LOOP NO.	NOM. PIPE SIZE INCH	LOOP DIM. H x W FT. x FT.	REMARKS
L-1	6	13 x 6.5	SEE DETAIL A4 / M503
L-2	6	12 x 6	

EXPANSION LOOP DIMENSIONS (C1)

SCALE: NTS M503

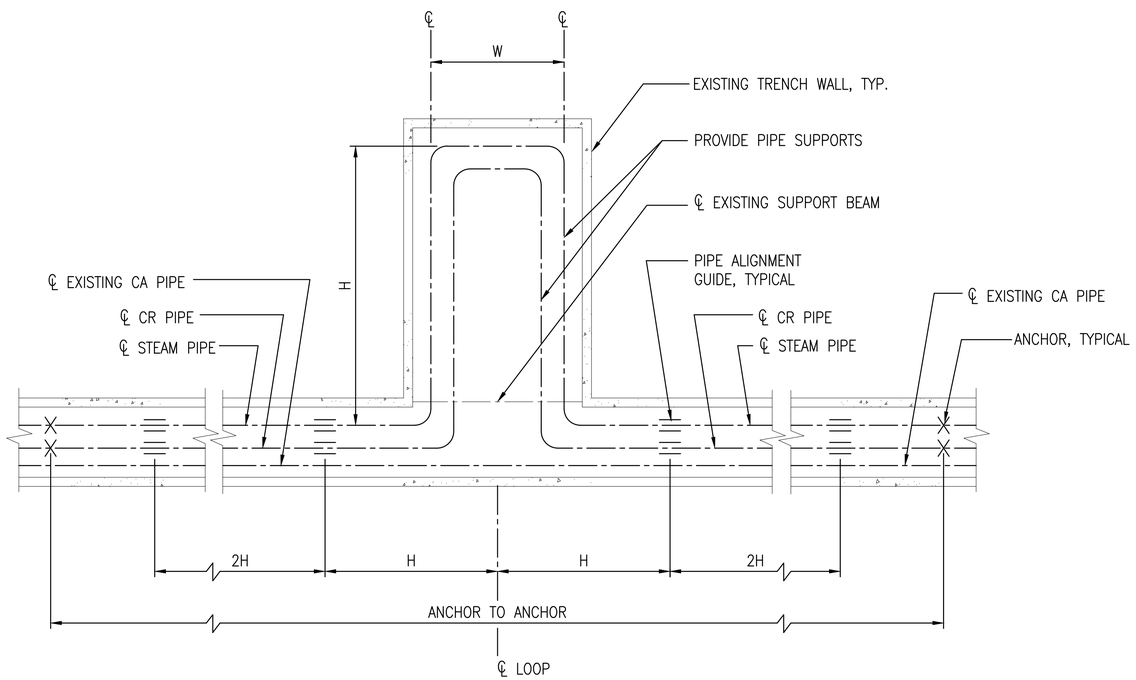

EXPANSION LOOP (A1)

SCALE: NTS M102

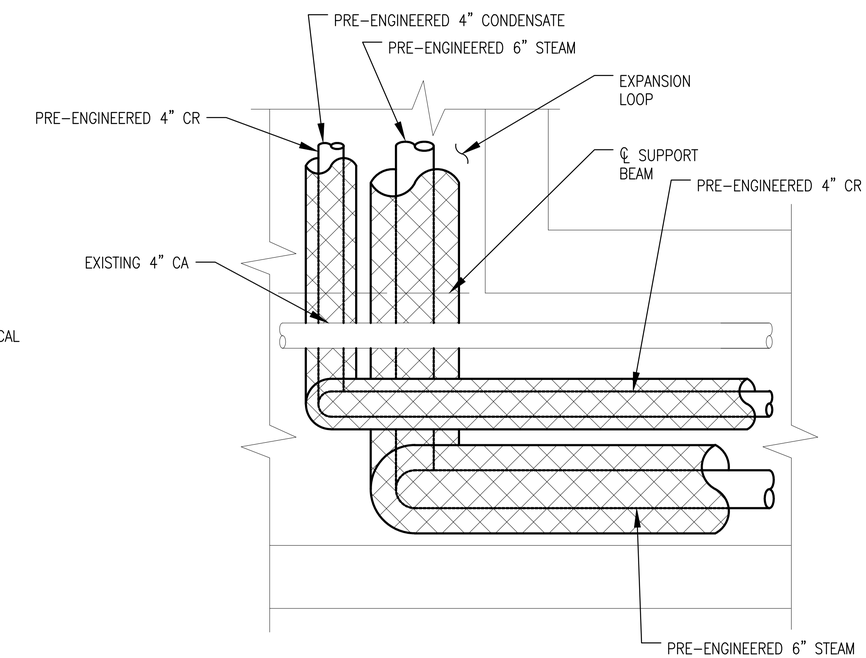

DETAIL (A4)

SCALE: NTS M102

GENERAL SHEET NOTES

1. SEE SHEET G002 AND M001 FOR LEGEND, ABBREVIATIONS AND GENERAL NOTES.

SYM	DESCRIPTION	DATE	APPR
0	ISSUE OF BID DOCUMENT	01/14/2016	JPC

NAVFAC

COMMONWEALTH OF VIRGINIA
JOHN PATRICK CASTELVECCHI, JR.
Lic. No 043782
01-14-2016
PROFESSIONAL ENGINEER
SEAL

BURNS McDONNELL
A/E INFO

APPROVED
FOR COMMANDER NAVFAC
ACTIVITY
SATISFACTORY TO DATE
DES A/E DRW FP CHK A/E
PM/DM ROGER ROY
BRANCH MANAGER NATHAN MAHER
FEAD/PM&E AMIN BAHROUR PM&E
FIRE PROTECTION X

DEPARTMENT OF THE NAVY
NAVAL FACILITIES ENGINEERING COMMAND
NAVAL FACILITIES ENGINEERING COMMAND ~ MID-ATLANTIC
PUBLIC WORKS DEPARTMENT - MAINE
NAVAL SHIPYARD - PORTSMOUTH, NH
PORTSMOUTH NAVAL SHIPYARD
KITTERY, MAINE

RMe REPAIR STEAM AND CONDENSATE CENTER LOOP, RM14-0206

DETAILS

EPROJECT NO.: 1370674
CONSTR. CONTR. NO. N40085-##-###-####
NAVFAC DRAWING NO. 12706419
SHEET 28 OF 31
M-503 MS-15-XXXX
DRAWFORM REVISION: 10 OCTOBER 2014

FILE NAME: \\bmcd\dfs\Clients\ANF\USNavy\MidAt\85860_PNSFY16UEM\Design\Mech\Sheets\1 - RM 14-0206 - Repair Steam and Condensate Center Loop\M503.dwg LAYOUT NAME: M503 PLOTTED: Monday, January 11, 2016 - 4:34pm USER: jrodriguez

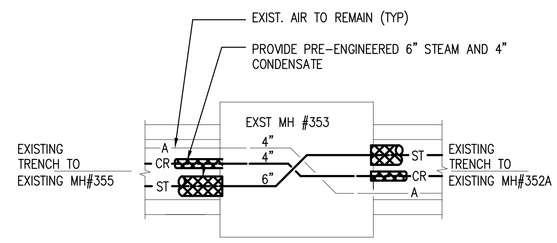

PLAN

DETAIL-PIPING SCHEMATIC IN EXISTING MANHOLE 353 (A4)

SCALE: NTS M102

GENERAL SHEET NOTES

1. SEE SHEET G002 AND M001 FOR LEGEND, ABBREVIATIONS, AND GENERAL NOTES.

SYM	DESCRIPTION	DATE	APPR
0	ISSUE OF BID DOCUMENT	01/14/2016	JPC

NAVFAC

COMMONWEALTH OF VIRGINIA
JOHN PATRICK CASTELVECCHI, JR.
Lic. No 043782
01-14-2016
PROFESSIONAL ENGINEER
SEAL

BURNS McDONNELL
A/E INFO

APPROVED
FOR COMMANDER NAVFAC
ACTIVITY
SATISFACTORY TO DATE
DES A/E DRW FP CHK A/E
PM/DM ROGER ROY
BRANCH MANAGER NATHAN MAHER
FEAD/PM&E AMIN BAHROUR PM&E
FIRE PROTECTION X

DEPARTMENT OF THE NAVY
NAVAL FACILITIES ENGINEERING COMMAND
PUBLIC WORKS DEPARTMENT – MAINE
NAVAL FACILITIES ENGINEERING COMMAND ~ MID-ATLANTIC
NAVAL SHIPYARD – PORTSMOUTH, NH
PORTSMOUTH NAVAL SHIPYARD
KITTERY, MAINE
RMe REPAIR STEAM AND CONDENSATE CENTER LOOP, RM14-0206

DETAILS

EPROJECT NO.: 1370674
CONSTR. CONTR. NO. N40085-##-###-####
NAVFAC DRAWING NO. 12706420
SHEET 29 OF 31
M-504 MS-15-XXXX
DRAWFORM REVISION: 10 OCTOBER 2014

FILE NAME: \\bmcd\dfs\Clients\ANF\USNavy\MidAt\85860_PNSYFY16UEM\Design\Mech\Sheets\1 - RM 14-0206 - Repair Steam and Condensate Center Loop\M504.dwg LAYOUT NAME: M504 PLOTTED: Monday, January 11, 2016 - 4:34pm USER: jrodriguez

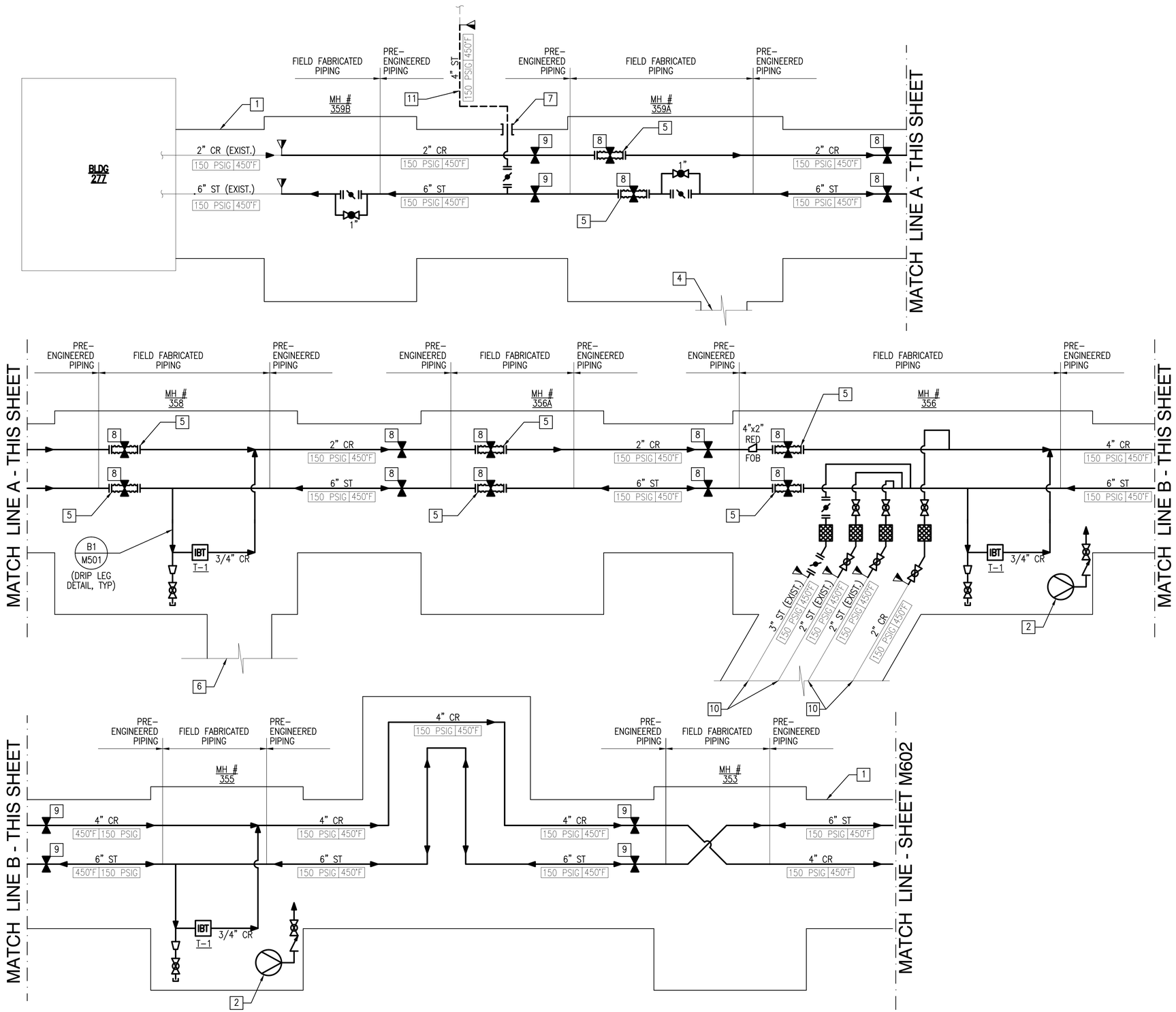

GENERAL SHEET NOTES

1. SEE SHEET G002 AND M001 FOR LEGEND, ABBREVIATIONS, AND GENERAL NOTES.

NEW WORK KEYNOTES

1. EXISTING CONCRETE PIPE TRENCH.
2. PROVIDE MANHOLE SUMP PUMP (CONNECT DISCHARGE PIPING AND ELECTRICAL AS DIRECTED BY NAVFAC).
3. NOT USED
4. ABANDONED CONCRETE TRENCH TO DEMOLISHED BUILDING 239.
5. PROVIDE GUIDED SLIP-TUBE EXPANSION JOINTS WITH INTEGRAL INTERMEDIATE ANCHOR. FIELD VERIFY PIPE CENTERLINE ELEVATIONS RELATIVE TO EXISTING TOP-OF-CONCRETE ELEVATIONS OF ANCHOR BASES AND PROVIDE CUSTOM EXPANSION JOINTS TO MATCH THE PIPE CENTERLINE TO TOP-OF-CONCRETE DIMENSIONS.
6. ABANDONED CONCRETE TRENCH.
7. PIPE PENETRATION WITH SEGMENTED MECHANICAL SEALS. SEE DETAIL B1/M502.
8. INTERMEDIATE ANCHOR.
9. MAIN ANCHOR.
10. TO BUILDING 291.
11. DIRECT BURY PRE-ENGINEERED STEAM PIPING

SYM	DESCRIPTION	DATE	APPR
0	ISSUE OF BID DOCUMENT	01/14/2016	JPC

NAVFAC

COMMONWEALTH OF VIRGINIA
JOHN PATRICK CASTELVECCHI, JR.
Lic. No 043782
01-14-2016
PROFESSIONAL ENGINEER
SEAL

BURNS McDONNELL
A/E INFO

APPROVED
FOR COMMANDER NAVFAC
ACTIVITY
SATISFACTORY TO DATE
DES A/E DRW FP CHK A/E
PM/DM ROGER ROY
BRANCH MANAGER NATHAN MAHER
FEAD/PM&E AMIN BAHROUR PM&E
FIRE PROTECTION X

DEPARTMENT OF THE NAVY
NAVAL FACILITIES ENGINEERING COMMAND
PUBLIC WORKS DEPARTMENT - MAINE
NAVAL FACILITIES ENGINEERING COMMAND ~ MID-ATLANTIC
NAVAL SHIPYARD - PORTSMOUTH, NH
PORTSMOUTH NAVAL SHIPYARD
KITTERY, MAINE

RMe REPAIR STEAM AND CONDENSATE CENTER LOOP, RM14-0206

DETAILS

EPROJECT NO.: 1370674
CONSTR. CONTR. NO. N40085-##-###-####
NAVFAC DRAWING NO. 12706421
SHEET 30 OF 31
M-601 MS-15-XXX
DRAWFORM REVISION: 10 OCTOBER 2014

FILE NAME: \\bmcd\dfs\Clients\ANF\USNavy\MidAt\85860_PNSYFY16UEM\Design\Mech\Sheets\1 - RM 14-0206 - Repair Steam and Condensate Center Loop\M601.dwg LAYOUT NAME: M601 PLOTTED: Monday, January 11, 2016 - 4:34pm USER: jrodriguez

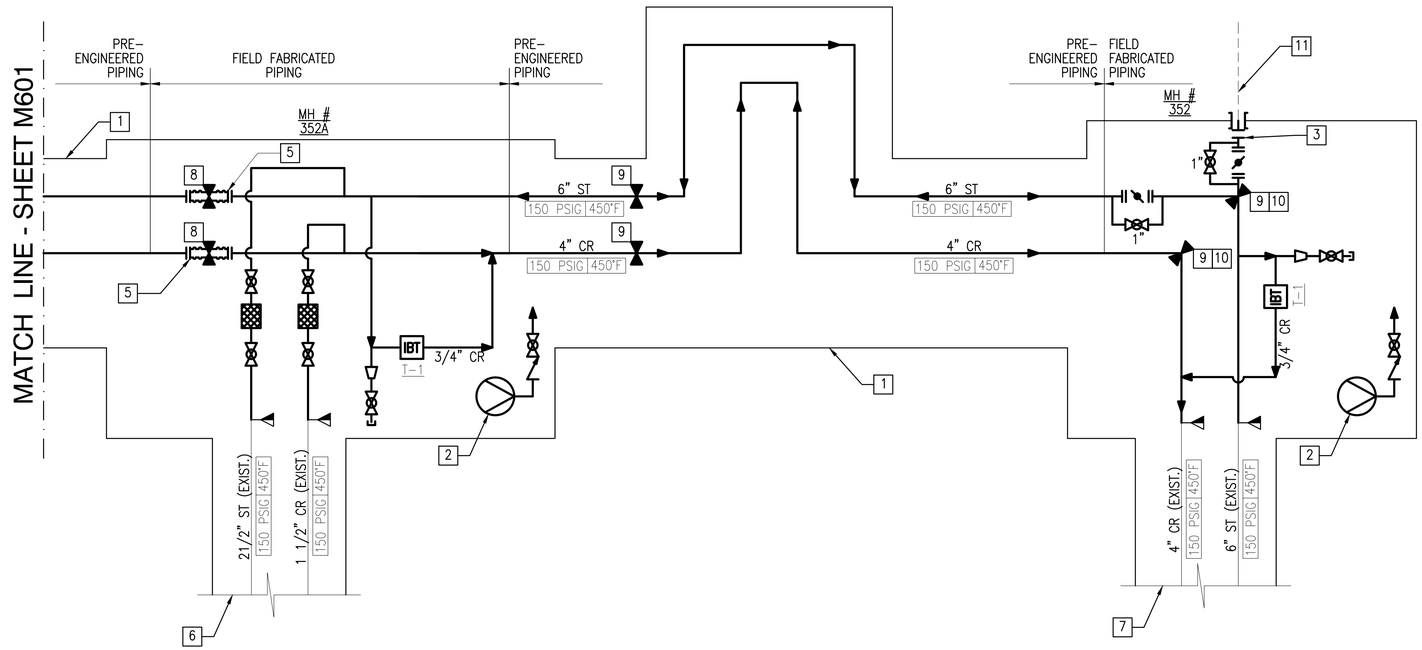

GENERAL SHEET NOTES

1. SEE SHEET G002 AND M001 FOR LEGEND, ABBREVIATIONS, AND GENERAL NOTES.

NEW WORK KEYNOTES

1. EXISTING CONCRETE PIPE TRENCH.
2. PROVIDE MANHOLE SUMP PUMP (CONNECT DISCHARGE PIPING AND ELECTRICAL AS DIRECTED BY NAVFAC).
3. PROVIDE BLIND FLANGE.
4. NOT USED.
5. PROVIDE GUIDED SLIP-TUBE EXPANSION JOINTS WITH INTEGRAL ANCHOR. FIELD VERIFY PIPE CENTERLINE ELEVATIONS RELATIVE TO EXISTING TOP-OF-CONCRETE ELEVATIONS OF ANCHOR BASES AND PROVIDE CUSTOM EXPANSION JOINTS TO MATCH THE PIPE CENTERLINE TO TOP-OF-CONCRETE DIMENSIONS.
6. TO MANHOLE #352C.
7. TO MANHOLE #352B.
8. INTERMEDIATE ANCHOR.
9. MAIN ANCHOR.
10. ANCHOR TO EXISTING ANCHOR BASE IN MH #352.
11. EXISTING DIRECT BURY STEAM PIPING TO MH #351.

STM	DESCRIPTION	DATE	APPR
0	ISSUE OF BID DOCUMENT	01/14/2016	JPC

NAVFAC

COMMONWEALTH OF VIRGINIA
JOHN PATRICK CASTELVECCHI, JR.
Lic. No. 043782
01-14-2016
PROFESSIONAL ENGINEER
SEAL

BURNS McDONNELL

A/E INFO

APPROVED

FOR COMMANDER NAVFAC

ACTIVITY

SATISFACTORY TO DATE

DES A/E | DRW FP | CHK A/E

PM/DM ROGER ROY

BRANCH MANAGER NATHAN MAHER

FEAD/PM&E AMIN BAHROUR PM&E

FIRE PROTECTION X

DEPARTMENT OF THE NAVY
NAVAL FACILITIES ENGINEERING COMMAND
PUBLIC WORKS DEPARTMENT – MAINE
PORTSMOUTH NAVAL SHIPYARD

NAVAL FACILITIES ENGINEERING COMMAND – MID-ATLANTIC
NAVAL SHIPYARD – PORTSMOUTH, NH
KITTERY, MAINE

RMe REPAIR STEAM AND CONDENSATE CENTER LOOP, RM14-0206

DETAILS

EPROJECT NO.: 1370674

CONSTR. CONTR. NO. N40085-##-###-####

NAVFAC DRAWING NO. 12706422

SHEET 31 OF 31

M-602 | MS-15-XXXX

DRAWFORM REVISION: 10 OCTOBER 2014

FILE NAME: \\bmcd\dfs\Clients\ANF\USNavy\MidAt\85860_PNSY\FY16\EDM\Design\Mech\Sheets\1 - RM 14-0206 - Repair Steam and Condensate Center Loop\M602.dwg LAYOUT NAME: M602 PLOTTED: Monday, January 11, 2016 - 4:34pm USER: jrodriguez