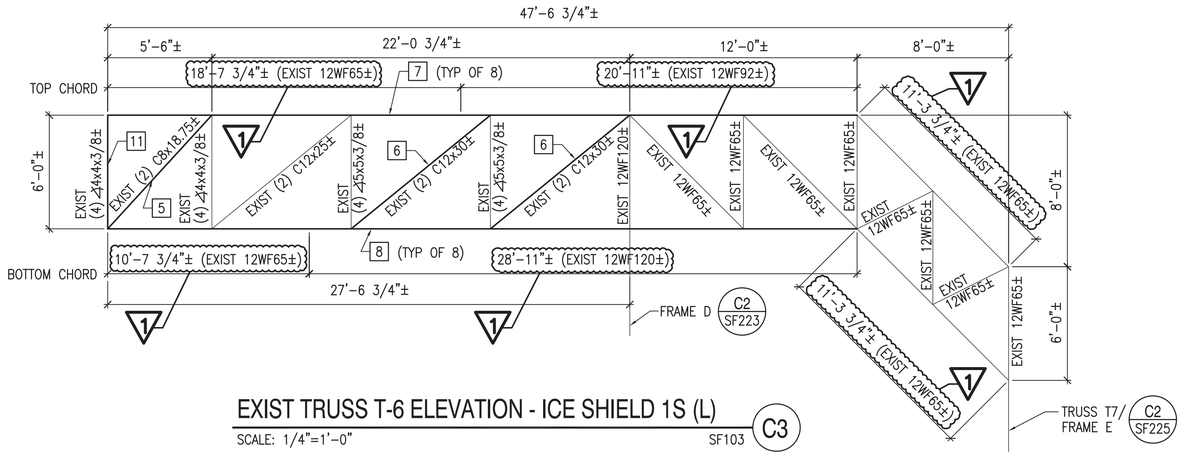

EXIST TRUSS T-6 ELEVATION - ICE SHIELD 1S (L)

SCALE: 1/4"=1'-0" SF103 C3

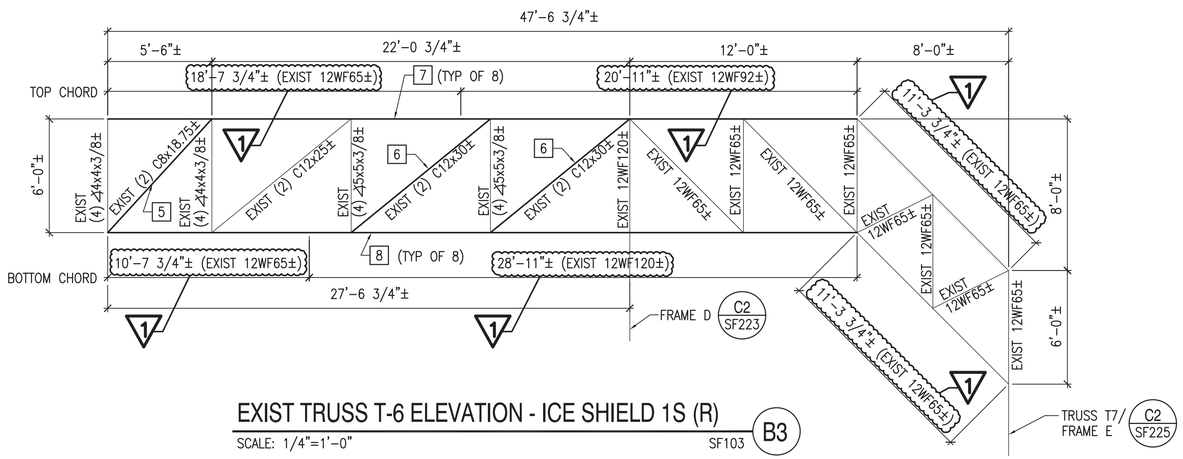

EXIST TRUSS T-6 ELEVATION - ICE SHIELD 1S (R)

SCALE: 1/4"=1'-0" SF103 B3

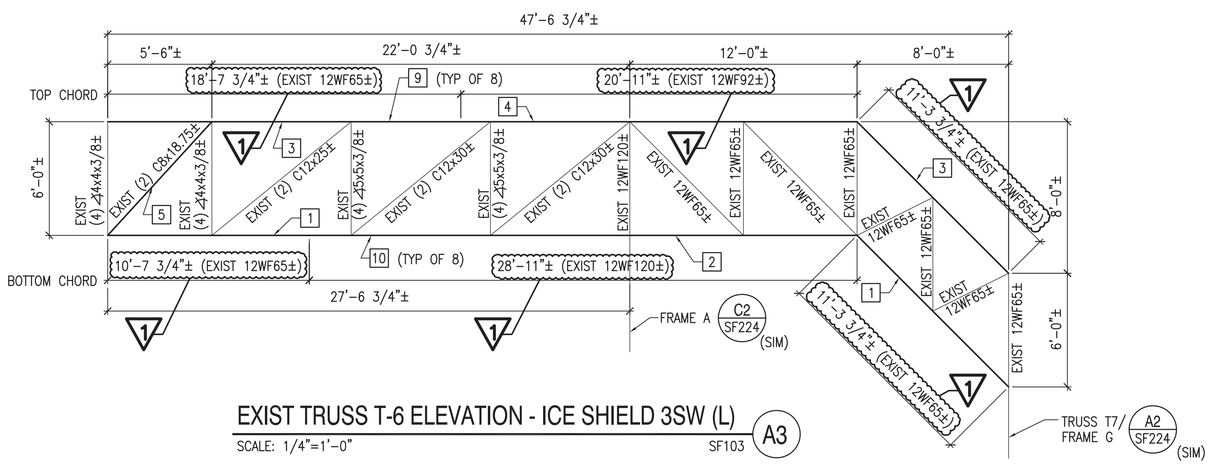

EXIST TRUSS T-6 ELEVATION - ICE SHIELD 3SW (L)

SCALE: 1/4"=1'-0" SF103 A3

GENERAL SHEET NOTES

1. ITEMS ON THIS SHEET ARE ASSOCIATED WITH OPTION 1.
2. REFER TO SHEET S-001 FOR PAINT REMOVAL AND PAINTING NOTES.
3. REFER TO SHEET S-001 FOR CONTAINMENT BERM AND STRUCTURE NOTES.

KEYNOTES (THIS SHEET ONLY)

1. REINFORCE EXISTING 12WF65± BOTTOM CHORD OF TRUSS T-6. SEE DETAIL D2/SF521.
2. REINFORCE EXISTING 12WF120± BOTTOM CHORD OF TRUSS T-6. SEE DETAIL D3/SF521.
3. REINFORCE EXISTING 12WF65± TOP CHORD OF TRUSS T-6. SEE DETAIL D5/SF521.
4. REINFORCE EXISTING 12WF92± TOP CHORD OF TRUSS T-6. SEE DETAIL C2/SF521.
5. REMOVE AND REPLACE EXISTING (2) C8x18.75± DIAGONAL MEMBER. SEE DETAILS C2/SF522 AND C4/SF522.
6. REMOVE AND REPLACE EXISTING (2) C12x30± DIAGONAL MEMBER. SEE DETAILS A2/SF522 AND A4/SF522.
7. REPAIR DRAIN HOLES IN TOP CHORD OF TRUSS T-6. SEE DETAIL B2/SF521.
8. REPAIR DRAIN HOLES IN BOTTOM CHORD OF TRUSS T-6. SEE DETAIL B2/SF521.
9. DRAIN HOLE IN REINFORCED TOP CHORD OF TRUSS T-6. SEE DETAIL C5/SF521.
10. DRAIN HOLE IN REINFORCED BOTTOM CHORD OF TRUSS T-6. SEE DETAIL C3/SF521.
11. REPAIR EXISTING ∠4x4x3/8± VERTICAL MEMBER. SEE DETAIL B5/SF522.

GRAPHIC SCALE

1/4" = 1' 4' 2' 0 4' 8' 12'

CHECK GRAPHIC SCALE BEFORE USING

SYM	DESCRIPTION	DATE	APPR
7	PRE-BID RFI #3 RESPONSE	03/15/16	PFD

NAVFAC

SEAL

OAK POINT ASSOCIATES
ARCHITECTURE • ENGINEERING • CONSULTING

A/E INFO

APPROVED

FOR COMMANDER NAVFAC

ACTIVITY

SATISFACTORY TO DATE 01/08/16

DES DNM DRW MJC CHK DNM

PM/DM DAVID HOPPER

BRANCH MANAGER MARTIN RYAN

FEAD/PM&E LCDR JAMES ROCHE

FIRE PROTECTION

DEPARTMENT OF THE NAVY
NAVAL FACILITIES ENGINEERING COMMAND
PUBLIC WORKS DEPARTMENT – MAINE
NCTFAMS LANT DET

NAVAL FACILITIES ENGINEERING COMMAND ~ MID-ATLANTIC
NAVAL SHIPYARD – PORTSMOUTH – NH
NCTCS CUTLER, MAINE

CUTLER SOUTH HELIX HOUSE STEEL PRESERVATION AND EXTERIOR RENOVATION

SOUTH HELIX HOUSE
TRUSS T-6 ELEVATIONS 1 [OPTION 1]

SCALE: AS NOTED

EPROJECT NO.: 1369480

CONSTR. CONTR. NO.

NAVFAC DRAWING NO. 12712483

SHEET 24 OF 48

SF221 LF-16-116

DRAWFORM REVISION: 10 MARCH 2009

15 Mar, 2016 – 9:23am
C:\cdfile\21403.12-SF221S.dwg

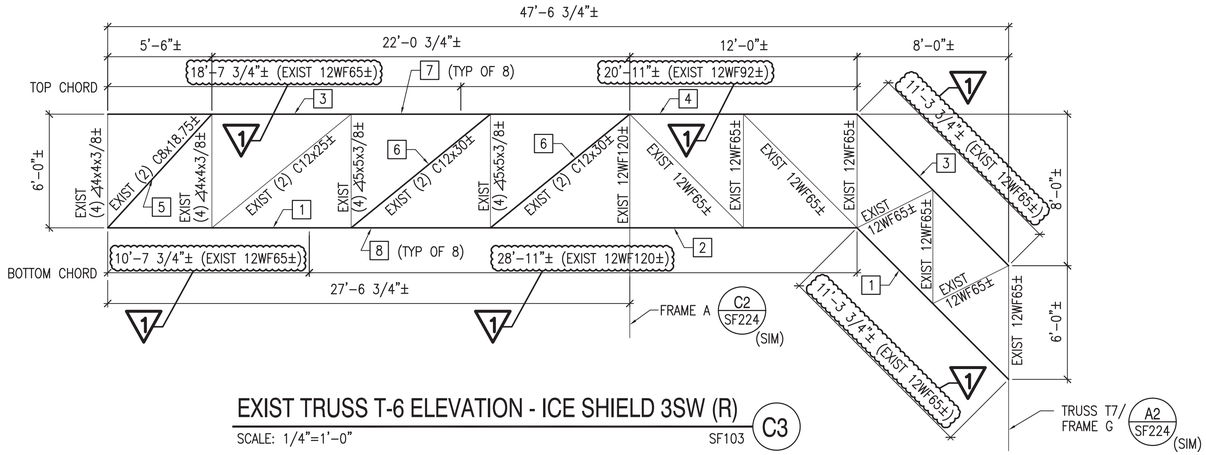

EXIST TRUSS T-6 ELEVATION - ICE SHIELD 3SW (R)

SCALE: 1/4"=1'-0" SF103 C3

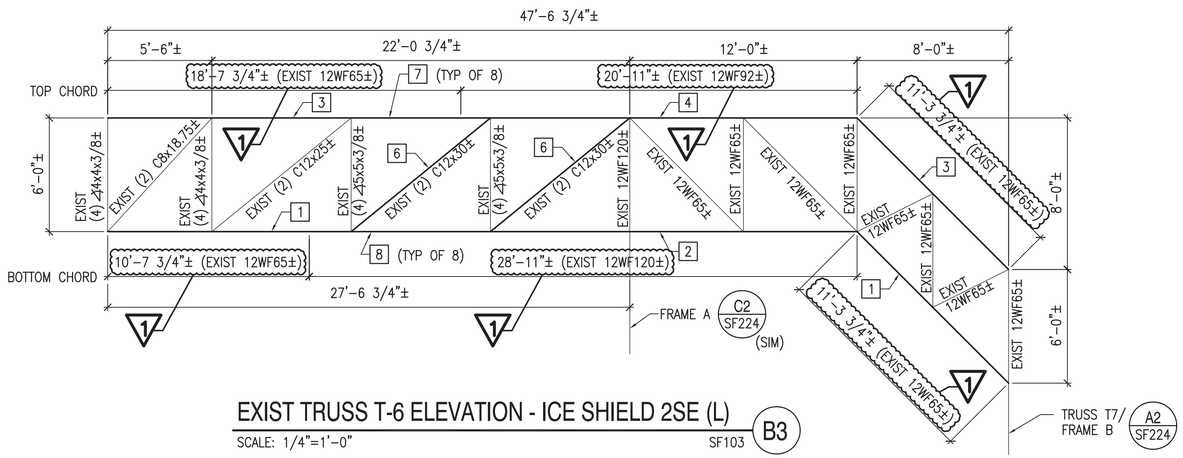

EXIST TRUSS T-6 ELEVATION - ICE SHIELD 2SE (L)

SCALE: 1/4"=1'-0" SF103 B3

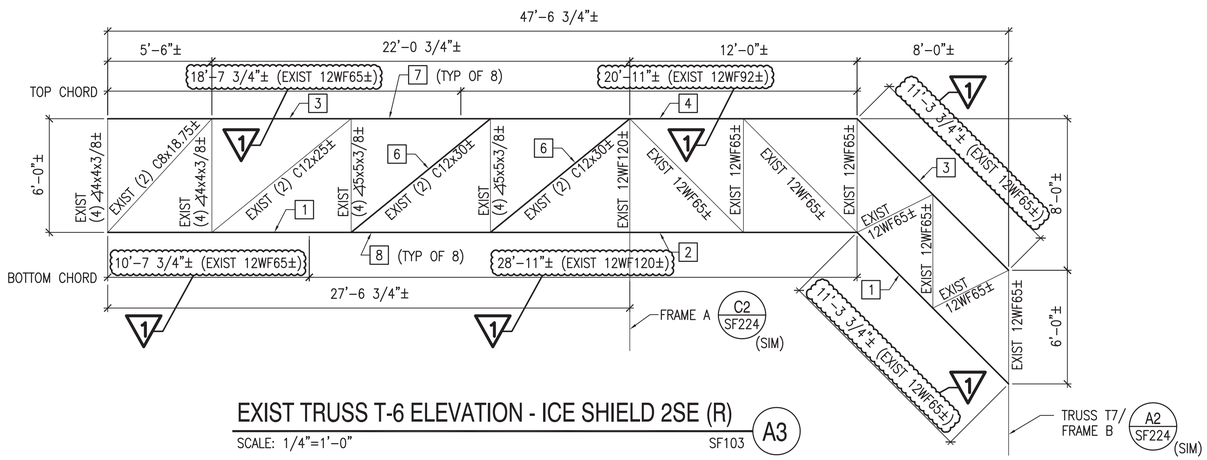

EXIST TRUSS T-6 ELEVATION - ICE SHIELD 2SE (R)

SCALE: 1/4"=1'-0" SF103 A3

GENERAL SHEET NOTES

1. ITEMS ON THIS SHEET ARE ASSOCIATED WITH OPTION 1.
2. REFER TO SHEET S-001 FOR PAINT REMOVAL AND PAINTING NOTES.
3. REFER TO SHEET S-001 FOR CONTAINMENT BERM AND STRUCTURE NOTES.

KEYNOTES (THIS SHEET ONLY)

1. REINFORCE EXISTING 12WF65± BOTTOM CHORD OF TRUSS T-6. SEE DETAIL D2/SF521.
2. REINFORCE EXISTING 12WF120± BOTTOM CHORD OF TRUSS T-6. SEE DETAIL D3/SF521.
3. REINFORCE EXISTING 12WF65± TOP CHORD OF TRUSS T-6. SEE DETAIL D5/SF521.
4. REINFORCE EXISTING 12WF92± TOP CHORD OF TRUSS T-6. SEE DETAIL C2/SF521.
5. REMOVE AND REPLACE EXISTING (2) C8x18.75± DIAGONAL MEMBER. SEE DETAILS C2/SF522 AND C4/SF522.
6. REMOVE AND REPLACE EXISTING (2) C12x30± DIAGONAL MEMBER. SEE DETAILS A2/SF522 AND A4/SF522.
7. DRAIN HOLE IN REINFORCED TOP CHORD OF TRUSS T-6. SEE DETAIL C5/SF521.
8. DRAIN HOLE IN REINFORCED BOTTOM CHORD OF TRUSS T-6. SEE DETAIL C3/SF521.

GRAPHIC SCALE

1/4" = 1' 4' 2' 0 4' 8' 12'

CHECK GRAPHIC SCALE BEFORE USING

SYM	DESCRIPTION	DATE	APPR
7	PRE-BID RFI #3 RESPONSE	03/15/16	PFD

NAVFAC

SEAL

OAK POINT ASSOCIATES

A/E INFO

APPROVED

FOR COMMANDER NAVFAC

ACTIVITY

SATISFACTORY TO DATE 01/08/16

DES DNM DRW MJC CHK DNM

PM/DM DAVID HOPPER

BRANCH MANAGER MARTIN RYAN

FEAD/PMAE LCDR JAMES ROCHE

FIRE PROTECTION

DEPARTMENT OF THE NAVY
NAVAL FACILITIES ENGINEERING COMMAND ~ MID-ATLANTIC
PUBLIC WORKS DEPARTMENT – MAINE NAVAL SHIPYARD – PORTSMOUTH – NH
NCTAMS LANT DET NCTCS CUTLER, MAINE

NAVAL FACILITIES ENGINEERING COMMAND

CUTLER SOUTH HELIX HOUSE STEEL PRESERVATION AND EXTERIOR RENOVATION

SOUTH HELIX HOUSE
TRUSS T-6 ELEVATIONS 2 [OPTION 1]

SCALE: AS NOTED

EPROJECT NO.: 1369480

CONSTR. CONTR. NO.

NAVFAC DRAWING NO. 12712484

SHEET 25 OF 48

SF222 LF-16-117

DRAWFORM REVISION: 10 MARCH 2009

15 Mar, 2016 – 9:25am
C:\dfile\21403.12–SF222S.dwg

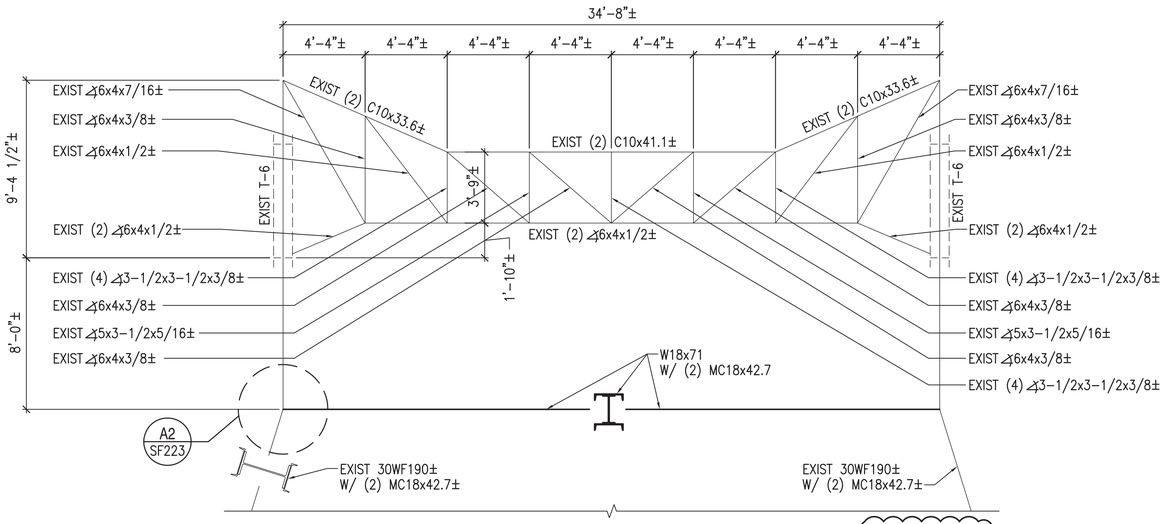

EXIST FRAME D ELEVATION

SCALE: 1/4"=1'-0" SF103, SF221, SF222 C2

NOTE:
SEE ITEM 0002f OF UNIT PRICE FORM.
1

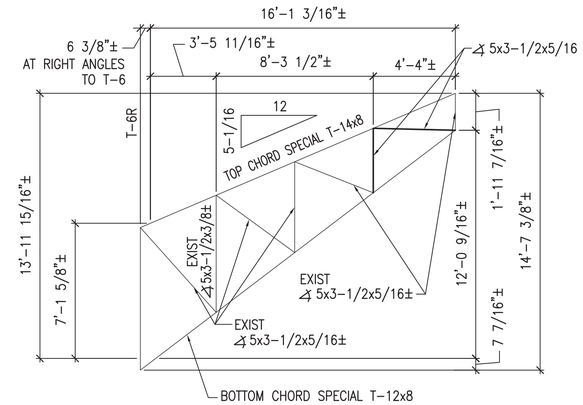

NOTES:

1. TRUSS T-4R (T-4L OPPOSITE HAND)
2. REMOVE EXISTING HSS MEMBER AT NEW ∠5x3-1/2x5/16 MEMBER LOCATIONS.
3. WELD ∠5x3-1/2x5/16 WITH 1/4" FILLET WELDS ALL AROUND TO EXISTING TOP AND BOTTOM CHORDS.

EXIST TRUSS T-4L AND T-4R ELEVATION

SCALE: 1/4"=1'-0" SF103 C4

GENERAL SHEET NOTES

1. ITEMS ON THIS SHEET ARE ASSOCIATED WITH OPTION 1.
2. REFER TO SHEET S-001 FOR PAINT REMOVAL AND PAINTING NOTES.
3. REFER TO SHEET S-001 FOR CONTAINMENT BERM AND STRUCTURE NOTES.

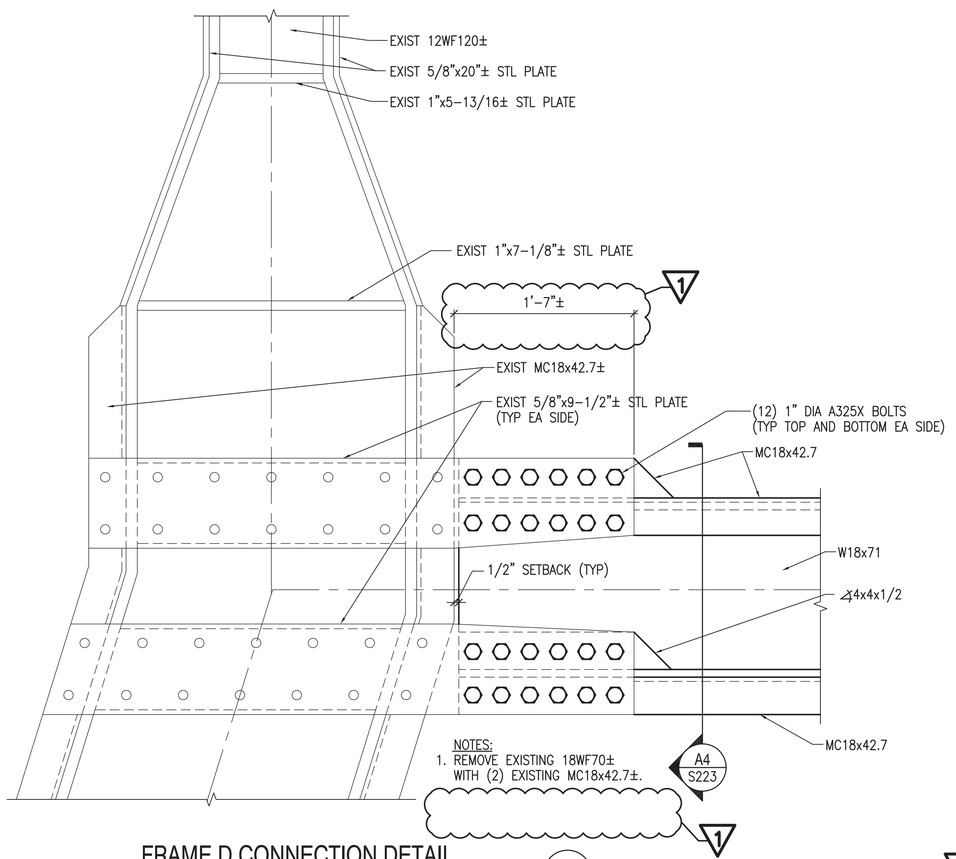

NOTES:
1. REMOVE EXISTING 18WF70± WITH (2) EXISTING MC18x42.7±.

FRAME D CONNECTION DETAIL

SCALE: 1-1/2"=1'-0" SF223, SF224 A2

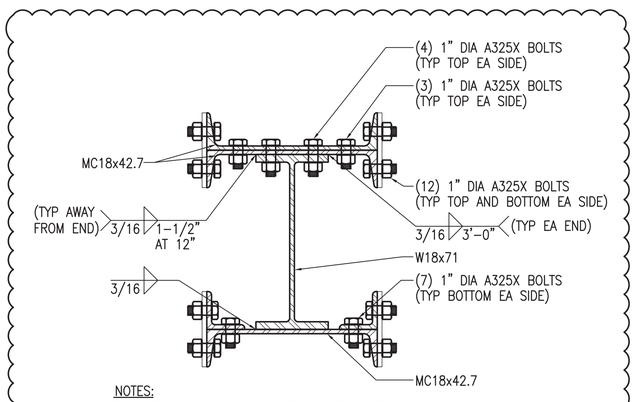

NOTES:
SPACING OF BOLTS SHALL MATCH EXISTING BOLT HOLES IN EXISTING 5/8"±x9-1/2"± STEEL PLATE.

FRAME D REPAIR BEAM SECTION

SCALE: 1-1/2"=1'-0" SF223, SF224 A4

GRAPHIC SCALES

1-1/2" = 1' 1' 6" 3" 0 1'
3/4" = 1' 2' 1' 6" 0 1' 2' 3' 4'
1/4" = 1' 4' 2' 0 4' 8' 12'

CHECK GRAPHIC SCALES BEFORE USING

SYM	DESCRIPTION	DATE	APPR
7	PRE-BID RFI #3 RESPONSE	03/15/16	PFD

NAVFAC

SEAL

OAK POINT ASSOCIATES
ARCHITECTURE • ENGINEERING • PLANNING

A/E INFO

APPROVED

FOR COMMANDER NAVFAC

ACTIVITY

SATISFACTORY TO DATE 01/08/16
DES DNM DRW MJC CHK DNM
PM/DM DAVID HOPPER
BRANCH MANAGER MARTIN RYAN
FEAD/PM&E LCDR JAMES ROCHE
FIRE PROTECTION

NAVAL FACILITIES ENGINEERING COMMAND
NAVAL FACILITIES ENGINEERING COMMAND ~ MID-ATLANTIC
NAVAL SHIPYARD - PORTSMOUTH - NH
NCTCS CUTLER, MAINE
DEPARTMENT OF THE NAVY
PUBLIC WORKS DEPARTMENT - MAINE
NCTAMS LANT DET

CUTLER SOUTH HELIX HOUSE STEEL PRESERVATION AND EXTERIOR RENOVATION

SOUTH HELIX HOUSE
FRAME D AND TRUSS T-4 ELEVATIONS [OPTION 1]

SCALE: AS NOTED
EPROJECT NO.: 1369480
CONSTR. CONTR. NO.
NAVFAC DRAWING NO. 12712485
SHEET 26 OF 48
SF223 LF-16-118

DRAWFORM REVISION: 10 MARCH 2009

15 Mar, 2016 - 9:35am
C:\dfile\21403.12-SF223S.dwg

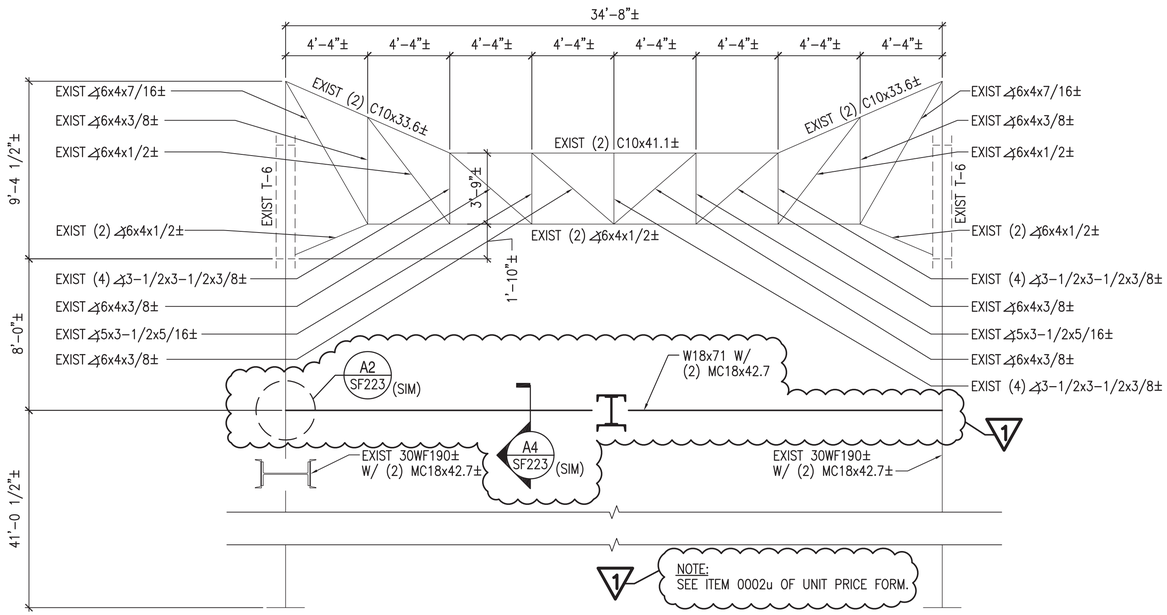

EXIST FRAME A ELEVATION

SCALE: 1/4"=1'-0" SF103, SF221, SF222 C2

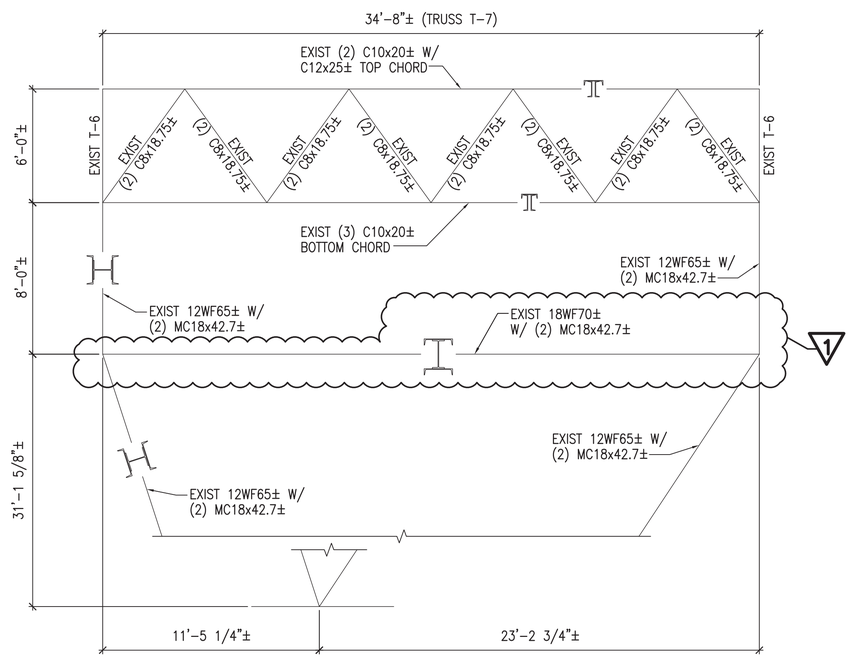

EXIST FRAME B ELEVATION

SCALE: 1/4"=1'-0" SF221, SF222 A2

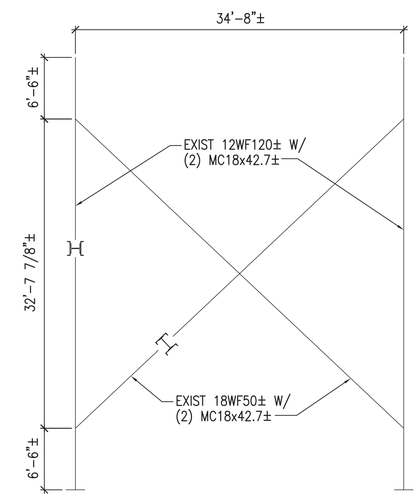

EXIST FRAME C ELEVATION

SCALE: 1/8"=1'-0" SF221, SF222 A4

GENERAL SHEET NOTES

1. ITEMS ON THIS SHEET ARE ASSOCIATED WITH OPTION 1.
2. REFER TO SHEET S-001 FOR PAINT REMOVAL AND PAINTING NOTES.
3. REFER TO SHEET S-001 FOR CONTAINMENT BERM AND STRUCTURE NOTES.

GRAPHIC SCALES

1/8" = 1' 8' 4' 0 8' 16' 24'

1/4" = 1' 4' 2' 0 4' 8' 12'

CHECK GRAPHIC SCALES BEFORE USING

SYM	DESCRIPTION	DATE	APPR
1	PRE-BID RFI #3 RESPONSE	03/15/16	PFD

NAVFAC

SEAL

OAK POINT ASSOCIATES

A/E INFO

APPROVED

FOR COMMANDER NAVFAC

ACTIVITY

SATISFACTORY TO DATE 01/08/16

DES DNM DRW MJC CHK DNM

PM/DM DAVID HOPPER

BRANCH MANAGER MARTIN RYAN

FEAD/PM&E LCDR JAMES ROCHE

FIRE PROTECTION

DEPARTMENT OF THE NAVY
NAVAL FACILITIES ENGINEERING COMMAND ~ MID-ATLANTIC
NAVAL SHIPYARD – PORTSMOUTH – NH
NCTCS CUTLER, MAINE
PUBLIC WORKS DEPARTMENT – MAINE
NCTAMS LANT DET

NAVAL FACILITIES ENGINEERING COMMAND

CUTLER SOUTH HELIX HOUSE STEEL PRESERVATION AND EXTERIOR RENOVATION

SOUTH HELIX HOUSE

FRAME A, FRAME B AND FRAME C ELEVATIONS [OPTION 1]

SCALE: AS NOTED

EPROJECT NO.: 1369480

CONSTR. CONTR. NO.

NAVFAC DRAWING NO. 12712486

SHEET 27 OF 48

SF224 LF-16-119

DRAWFORM REVISION: 10 MARCH 2009

15 Mar, 2016 – 9:36am
C:\cdfile\21403.12-SF224S.dwg