Public Works Department, Maine

MEMORANDUM

From: PM & E
To: Acquisition
Date: 09/22/16
Subject: Replace the Compressed Air Dryers at Building 72

MAXIMO #:
eProjects #: 1364182
Point of Contact: Mike Melvin, ext. 1049

Attachments:

(1) Mechanical & Electrical Drawings for New Compressed Air Dryer Installation
(2) Division 1 Specifications
(3) UFGS 26 20 00 – Interior Distribution System

1.0 PROJECT BACKGROUND AND INTENT:

The existing compressed air dryers at B72 are beyond their 20 year design life and require replacement. Originally installed outside, a building was erected around the air dryers to protect them from the elements. Unfortunately, the building was constructed in a manner that prevents removing the air dryers without dismantling it. This project will install three new air dryers beneath the "trim compressor" platform, in the air compressor bay of the Power Plant, plus all of the air piping needed to bring air from the air distribution manifold and back again (the air distribution manifold is located adjacent to the existing air dryer enclosure). At the completion of this project the new air dryer systems and all of the additions to the air system shall be complete and usable, supplying dried air meeting the specifications described within this document to Yard East, Yard West, and the Plant.

The existing air dryers were also discovered to consume a substantial amount of electricity during their desiccant regeneration cycle. As an option to this project, the contractor shall substitute steam heat exchangers for the electric heaters on the air dryers, including all of the piping fittings and valves necessary to connect to the steam and condensate lines within the Power Plant.

2.0 BASE BID SCOPE OF WORK:

2.1. Air Dryers

2.1.1. The contractor shall provide three new blower purge air dryers for installation under the "trim compressor" platform in Building 72.

Performance:

2.1.2. Each air dryer shall be capable of drying no less 4800 SCFM of air to a dew point of -40°F (or dryer), when the compressed air is supplied to the dryers at approximately 115 psi at approximately 70°F-110°F (the contractor shall verify the temperature of the air exiting the air flasks to establish the inlet air temperature range, as the inlet air thermometers on each of the air dryers have not been recently calibrated).

2.1.3. The total pressure drop from the inlet of each air dryer unit to the outlet downstream of the unit's post dryer filter shall not exceed 5 psi.

2.1.4. At no time shall the air dryer output air with a dew point wetter than -40°F.

Valves and Moving Parts within the Airstream:

2.1.5. The supplied air to the shipyard is oil free and is breathing quality. All valves and moving components within the airstream shall be designed and installed to function without lubrication.

Thermal Insulation:

2.1.6. All components of the air dryer system that reach temperatures hot enough to cause burns to personnel shall be insulated. That insulation shall be protected with a resilient covering, such as sheet metal jacketing, to prevent inadvertent damage to the insulation. The thickness of the insulation shall be sized to minimize thermal losses from the system.

High Temperature Filters:

2.1.7. Each air dryer unit shall have a high temperature filter downstream of the dried air discharge, which shall be capable of removing 99.98% of all particles 0.9 micron or larger, suspended in the air stream.

2.1.8. The filter shall utilize serviceable / replaceable cartridges that can be accessed without disassembly of the air dryer unit, portions of the air system, or any of the surrounding equipment.

2.1.9. The filter shall incorporate a visual indicator to determine the filter's cartridges' remaining service life / capacity. An example of such an indicator would be pressure differential gauge, annotated to show when the filter needs to be replaced.

Air Drying and Desiccant Regeneration:

2.1.10. Each air dryer shall dry air by passing its portion of the compressed air stream from the 10" supply air pipe through a pressure vessel loaded with adequate desiccant to continuously dry the air, to the minimum dew point (or better) and the flow rate previously listed in this document.

2.1.11. The air dryer desiccant media shall be activated alumina.

2.1.12. Each air dryer shall be capable of drying air continuously, without delays in operation to regenerate moisture laden desiccant. This is often done by incorporating dual desiccant pressure vessels, with one vessel in drying mode while the other is either in regeneration mode or on standby.

2.1.13. During the regeneration cycle, ambient air shall be drawn through a filter, passed through an electric heater, and then blown into the pressure vessel containing the moisture laden desiccant. The air shall be heated to a temperature sufficient to completely draw the moisture out of the desiccant and into the hot air stream, which shall be vented out of the building. The velocity of the air in the pressure vessel(s) containing the desiccant shall not exceed a value that will allow the desiccant to be captured in the air stream or to be agitated (causing it to degrade / break-down. The temperature of the hot air stream shall not exceed a value that will cause thermally induced damage the desiccant (causing it to degrade / breakdown or to lose performance).

2.1.14. The complete desiccant regeneration cycle shall take no more than 4 hours, including time for the desiccant to cool prior to the resumption of air drying.

2.1.15. Moisture laden air exiting the desiccant beds shall be vented out of the building (through an existing hole in the west wall of the compressor bay), utilizing vent caps designed to prevent, insects, birds, and water from entering the vent piping. The contractor shall provide vent piping, vent caps, pipe hangers, gaskets (if necessary), hardware, a weatherproof, infill (to seal the space around the pipes and the existing hole to the exterior of the building), and all other necessary components to the exhaust the moisture laden air outside.

2.1.16. The desiccant regeneration cycle shall utilize a system that measures the dew point of the dryer's outlet air and automatically initiates the regeneration cycle when outlet air approaches a dew point (determined and set by the air dryers' manufacturer). The regeneration cycle shall commence before air, having a dew point wetter than -40°F, is output from the dryer. This system shall also provide a selectable mode of operation

that allows the regeneration cycle to initiate on a time based set-schedule, which shall be configurable by the operator).

2.1.17. The regeneration cycle shall utilize compressed dried air to cool the desiccant, preventing humid ambient air from entraining moisture in the desiccant during the cooling phase of the regeneration cycle. This system shall have a selectable mode of operation that allows ambient air (blown through the desiccant) to be used to cool the desiccant when ambient conditions are favorable for this mode of cooling (e.g. during cold dry winter days).

2.1.18. If dual or multiple pressure vessels are employed, the system shall pressurize the regenerated vessel with dried air prior to switching vessels.

2.1.19. If dual or multiple pressure vessels are employed, the system shall depressurize the vessel being regenerated in a controlled manner that does not damage the desiccant media or expel it from the pressure vessel. A muffler shall be employed to minimize the sound emitted from the vessel while reducing its pressure. The sound level shall not exceed 94 dB at three feet distance from the muffler(s).

2.1.20. Each air dryer shall be designed and assembled to allow the electric desiccant regeneration to be converted to steam desiccant regeneration at a later date, if Bid Option 1 is not exercised by the Government at the time this contract is awarded.

Pressure Vessel(s), Service Ports, and Elevated Access for Service:

2.1.21. All pressure vessels provided with the new air dryers shall be designed and fabricated in accordance with ASME BPVC, Section VIII, Division 1 (latest revision).

2.1.22. All pressure vessels shall bear the appropriate ASME Certification Mark, as directed by ASME BPVC, Section VIII, Division 1 (latest revision).

2.1.23. All pressure vessels shall be protected from over pressurization by use of pressure relief devices selected, designed, and fabricated in accordance with the latest revisions of ASME PBVC, Section VIII, Division 1, and ASME PTC 25, Pressure Relief Devices.

2.1.24. All pressure vessels containing desiccant shall be provided with appropriately sized and located ports, for the filling and removing of desiccant. The fill port shall be on the top of the vessel and removal port shall be located to allow the desiccant to be easily drained into reasonably sized collection containers (e.g. buckets sized to hold no more than 40 lbs. of desiccant.) The ports should also provide sufficient access for the bottom the vessel(s) to be vacuumed out once the bulk of the desiccant has been removed.

2.1.25. The pressure vessel(s) containing desiccant shall be sized to lower the velocity of the air through it / them enough to prevent the desiccant from being agitated by or

captured in the air stream. This will prevent damage to the desiccant (potentially creating smaller desiccant particles) and will prevent the desiccant from being passed to the post dryer filter.

2.1.26. Work platforms, accessed by stairs (if possible within the specific constraints of the area in which the air dryers will be installed), shall be provided by the contractor to access all service hatches and/or desiccant media fill ports / hatches. The work platforms shall be fully compliant with OSHA 1910, Subpart D, with a floor loading suitable for multiple workers, their tools, and bags / containers of replacement desiccant. If the work platform positions a worker/s feet 4 ft. off the ground or higher, the Contractor shall provide standard handrails / toe boards, compliant with the requirements OSHA 1910.23.

2.1.27. No portion of the new air dryer units and/or supporting systems shall prevent or encumber the operation or servicing of existing valves / equipment in the new air dryer area.

Controls:

2.1.28. The electronic controls employed on the new air dryers shall be capable of interfacing with and passing information to the existing Allen-Bradley Digital Control System (DCS) in the Power Plant.

On Unit Displays:

2.1.28.1. Each of the three air dryers shall incorporate a touchscreen panel display that allows the equipment's operators to select / control modes of operation, view equipment status, view equipment faults and warnings, and view current and historical equipment performance & data.

2.1.28.2. The control system shall store / log faults, warnings, performance, and other relevant data, dating back dating back 30 days. Performance and other relevant data shall include (but not necessarily exclusively) dew point of output air, incoming air temperature, output air temperature, incoming air pressure, output air pressure, and hours of operation. If dual or multiple pressure vessels are employed, the data shall also indicate which vessel was on-line to correlate its performance to the stored data. Dew point, temperature, and pressure data shall be logged hourly.

2.1.28.3. All data shall be downloadable from the dryer units and shall be output to a Microsoft Excel compatible file, via a laptop and USB connection. This file shall be capable of being saved and printed via Microsoft Excel without permission restrictions.

2.1.29. Each air dryer assembly shall have temperature and pressure gages at key points on the air dryer assembly to monitor system performance and to assist with trouble

shooting. This shall include gages monitoring inlet and outlet pressures and temperatures.

Initial Testing:

2.1.30. The performance of the air dryer units shall be fully tested at the factory after fabrication, to verify the units are operating optimally (middle of the acceptable performance range) within the manufacturer's specifications. In addition to the performance test, the manufacturer shall perform a soap bubble test on all joints between components, piping, and fittings. The performance testing of each air dryer shall be accomplished at conditions no less stringent that those described in the performance requirements stated earlier in this document. The contractor shall provide the test plan to the government for approval prior to performing the test. The results of the performance testing and the soap bubble testing shall be documented, signed by a manufacturer's representative, and submitted to the Government.

Post Installation Testing of Air Dryers:

2.1.31. After the installation of the air dryer units is completed (units are connected to the air system, condensate drains, exhaust piping, and electrical feeds) and following the successful completion of the hydrostatic testing (for the modifications to the Plant's air system), the contractor shall test of each unit to verify it is fully functional and working within the factory specifications for its performance. The performance testing of each air dryer shall be accomplished at conditions no less stringent that those described in the performance requirements stated earlier in this document. In addition to the performance test, the manufacturer shall perform a soap bubble test on all joints between components, piping, and fittings. These tests shall be performed by a factory technician from the air dryer manufacturer. All testing shall be scheduled and coordinated with the Contracting Officer and the Power Plant General Foreman, no less than 15 days before the tests are to commence. Power Plant personnel will be responsible to establish the valve line-ups to the Shipyard's air system. The contractor shall provide the test plan to the government for approval prior to performing the test. The results of the performance testing and the soap bubble testing shall be documented, signed by a manufacturer's representative, and submitted to the Government.

2.2. Area Where New Air Dryers will be Installed:

Access:

2.2.1. Direct access to the area in which the new air dryers will reside is impeded by steel columns and bracing. Depending on the design and construction of the new air dryer units, this may require that the units be brought into the area in pieces or assemblies small enough to pass through the spaces between columns (described in greater detail below).

2.2.2. The air dryer units or components shall enter the compressor bay via a large roll-top door at the north end of bay. A loading platform extends into the bay behind the roll-top door that can be serviced by the bay's overhead crane.

2.2.3. When scheduled and available, the Navy will provide lifting and handling services within the compressor bay to lift components off of the loading platform to transfer them to the basement floor. The contractor shall be responsible to move the air dryer units / components onto the bay's loading platform and the contractor shall also be responsible to transfer the air dryer units / components into the location where they will reside. Note that Navy lifting and handling services require scheduling and those services are frequently not available on short notice. To take full advantage of Navy lifting and handling services, the contractor shall prepare and stage as many components as possible for lifting operations. The contractor shall identify the number and nature of lifts (type of components and approximate weights) when making the request for Navy lifting and handling support. Minimizing the number of crane lifts required (e.g. lift assemblies when possible) will be beneficial in securing Navy lifting and handling support (scheduling crane support for fewer lifts is easier than scheduling for more). The contractor shall make requests for lifting and handling support through the contracting officer, no later one week in advance of the desired date to perform the lifts.

Maximum Dimensions and Space Allotted for Installation:

2.2.4. All three air dryers and their supporting equipment will be located in an area that is approximately 41' x 23'. Due to existing electrical conduit, and piping runs, the height of this area varies from 9'9" to 11'4". There is approximately 45 ft^2 of a space in the southeast corner of the 41' x 23' area that is behind a chain link fence. If need be to accommodate the air dryers, the contractor shall relocate this fence. Additionally, there is an extension of a horizontal beam that projects into the fenced area. If need be to accommodate the air dryers, the contractor shall cut this beam back to a vertical column supporting the platform above, to which the horizontal beam is welded.

2.2.5. All components of the air dryers and the supporting modifications to the air system must pass through the spaces between the columns in the basement of the compressor bay. The only paths (there are three) into the area where the air dryers will reside are 52" wide and 6'10" wide. Note that there is a staircase (with a hand rail assembly) in the way of one of three travel paths that the contractor shall temporarily remove, if this path is needed to transit equipment through. Removal of the staircase will require removal of the concrete footing on which the stairs rest. If removed, the contractor shall replace the footing and reinstall the stairs and handrails after all of the equipment has passed through. In accordance with OSHA CFR 29 Subpart D Standard Number 1910.23, the contractor shall provide a temporary means to protect personnel from the fall hazard created the unprotected edge, if the stairs and handrail are removed.

2.2.6. Items that require periodic service (e.g. heaters, desiccant, and filters) shall be accessible and serviceable without disassembly of the air dryer, an adjacent air dryer, or

any of the existing surrounding structures / assemblies (e.g. an existing piping system, structural column, conduit run).

2.2.7. Where possible, the contractor shall arrange the equipment to maintain a 3' wide clearance area around each air dryer, allowing personnel access to the equipment for inspections and maintenance. Due to the layout of the columns and a lower level area bordering the area for the new air dryers, there will be instances where an existing structure will exist with the clearance area. The contractor shall also ensure the equipment arrangement complies with all clearances required or referenced by NFPA 70, NEC.

2.2.8. There is a 102" wide x 48" section of steel floor grating that the contractor shall replace in the southwest end of the new air dryer area. This steel grating is heavily corroded, deformed, and deflects substantially under load.

2.3. Piping and Valves:

Connection to Supply and Return Air Pipes:

2.3.1. The contractor shall provide the piping, fittings, reducers, valves, hangers, gaskets, and hardware necessary to connect the supply and return airlines to the air dryer assemblies and to isolate the air dryers. This shall include valves on the supply and return air lines that allow each air dryer to be individually isolated from the air system. The connections to the supply and return air lines shall be made such that each air dryer is in parallel with the others and not in series, allowing each air dryer to process the same amount of air as the others, without the use of additional restrictions to balance the flow through the air dryers.

Condensate Drain Lines:

2.3.2. The contractor shall provide the piping, valves, fittings, gaskets (if necessary), hangers (if necessary), and all hardware to run condensate drain lines from the air dryers to the grated steam trench (this runs east to west, perpendicular to the diesel engine skids north of the new air dryer area).

10" Supply and Return Air Lines to Air Dryers:

2.3.3. The contractor shall provide the piping, fittings, reducers, valves, hangars, gaskets, and hardware necessary to run two 10" air pipes from the existing air manifold west of the existing air dryers to the new air dryers to be installed in the compressor bay. The pipes shall travel almost entirely in the interior of the building, running from the existing distribution manifold (located on the wall of Building 72 adjacent to the existing air dryer enclosure, to the space under the "trim compressor" platform). Figures 1, 2, 3, & 4 respectively show the existing configuration of the air distribution manifolds and the new configuration the contractor shall provide. The contractor shall perform this work

without interrupting the dried compressed air supply to Yard West and Yard East. If possible the contractor shall perform this work without interrupting the dried compressed air supply to the Plant itself. Attachment 1 shows the approximate path the new supply and return air lines shall follow.

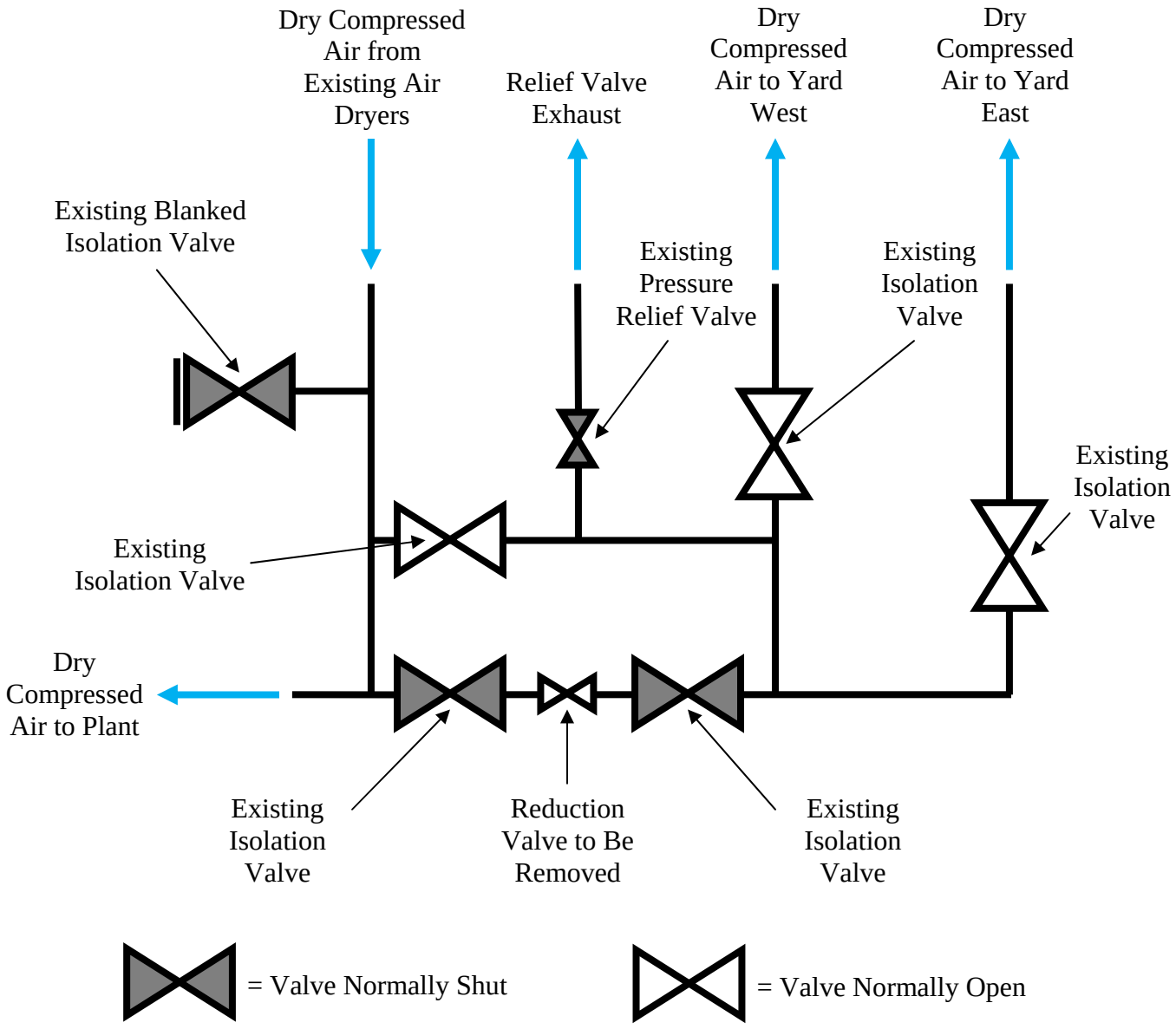

Figure 1 – Existing Exterior Air Manifold Configuration Adjacent to Existing Air Dryers

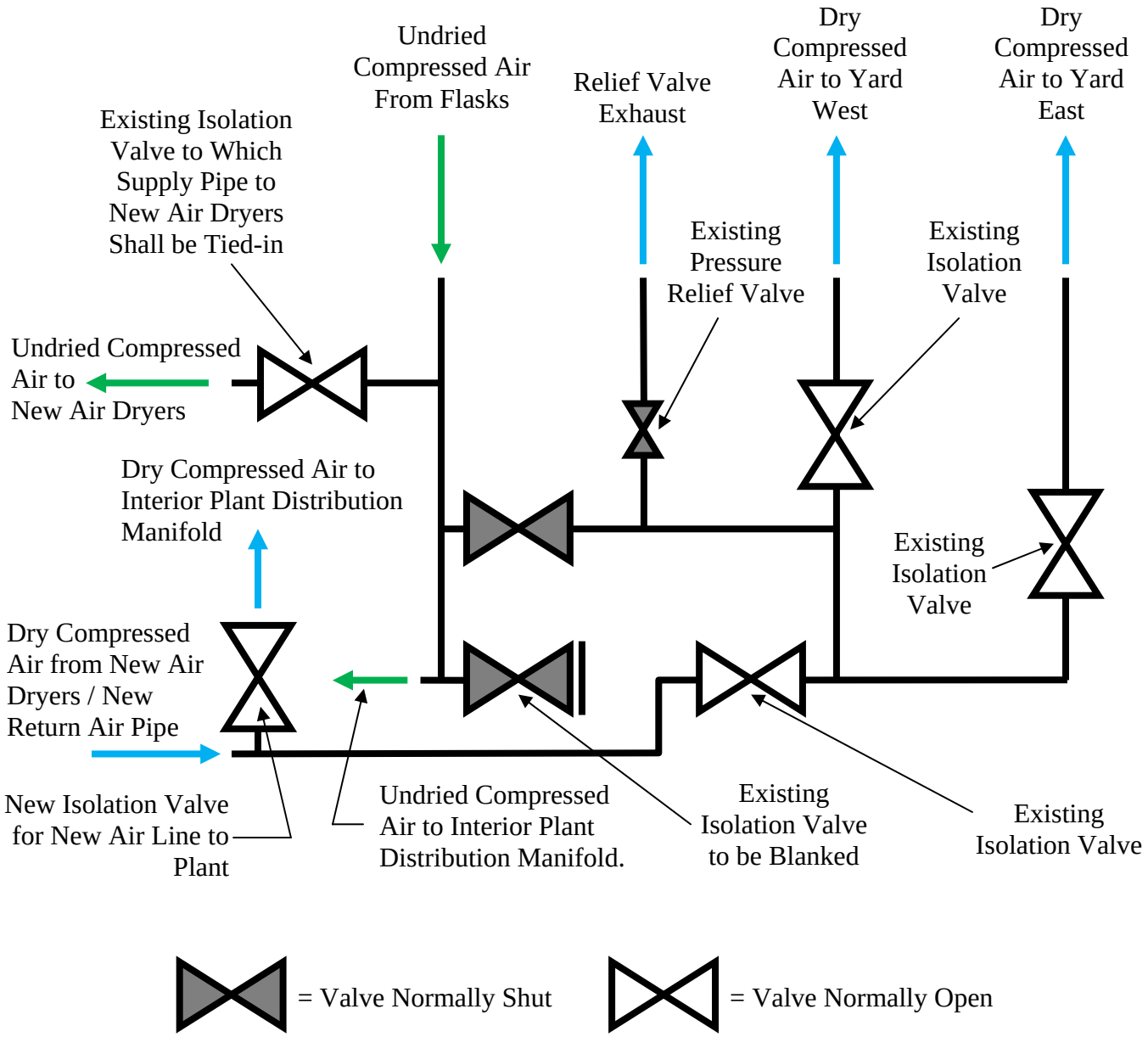

Figure 2 –New Exterior Air Manifold Configuration Adjacent to Existing Air Dryers

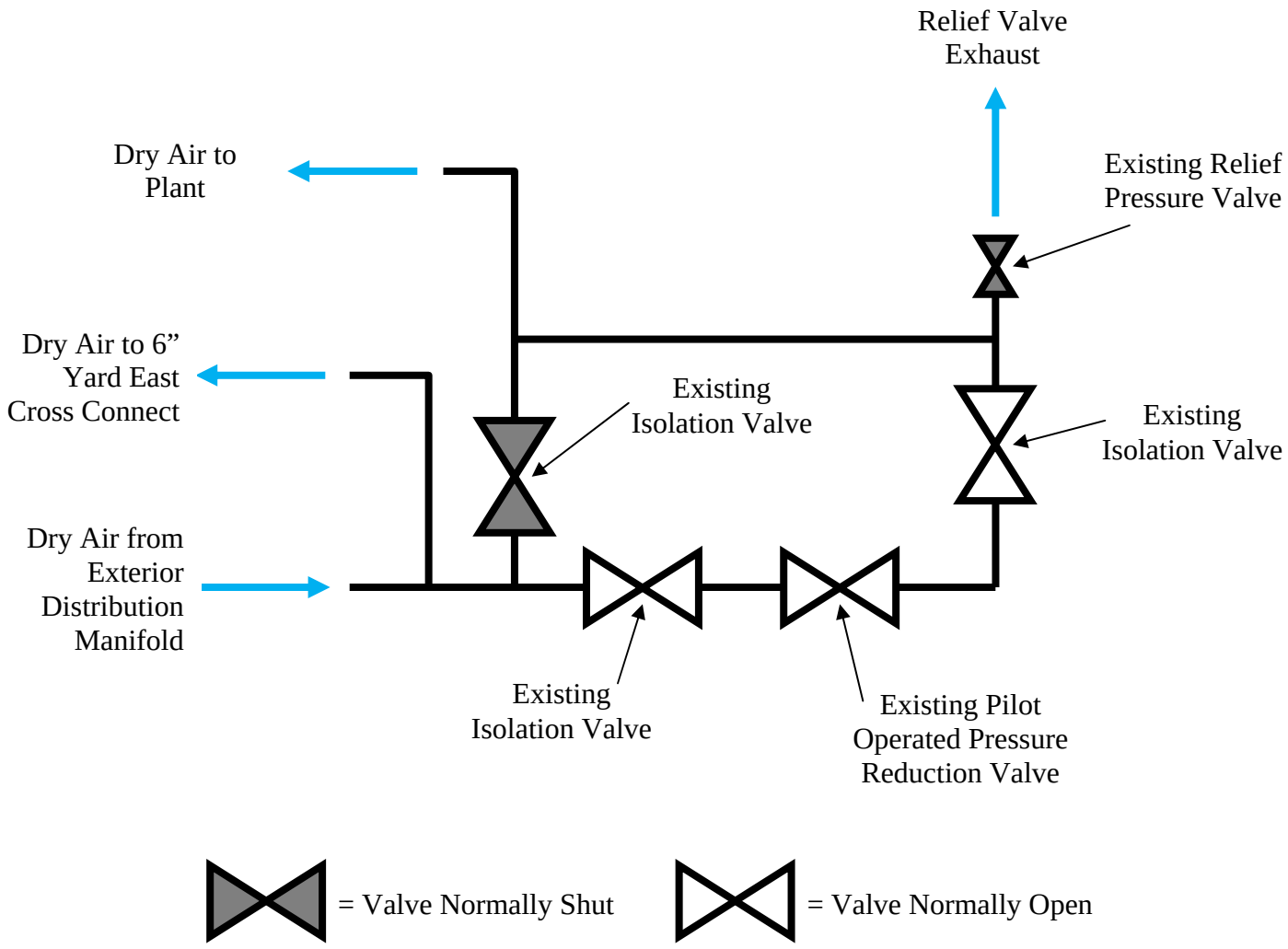

Figure 3 – Current Configuration of Interior Air Distribution Manifold

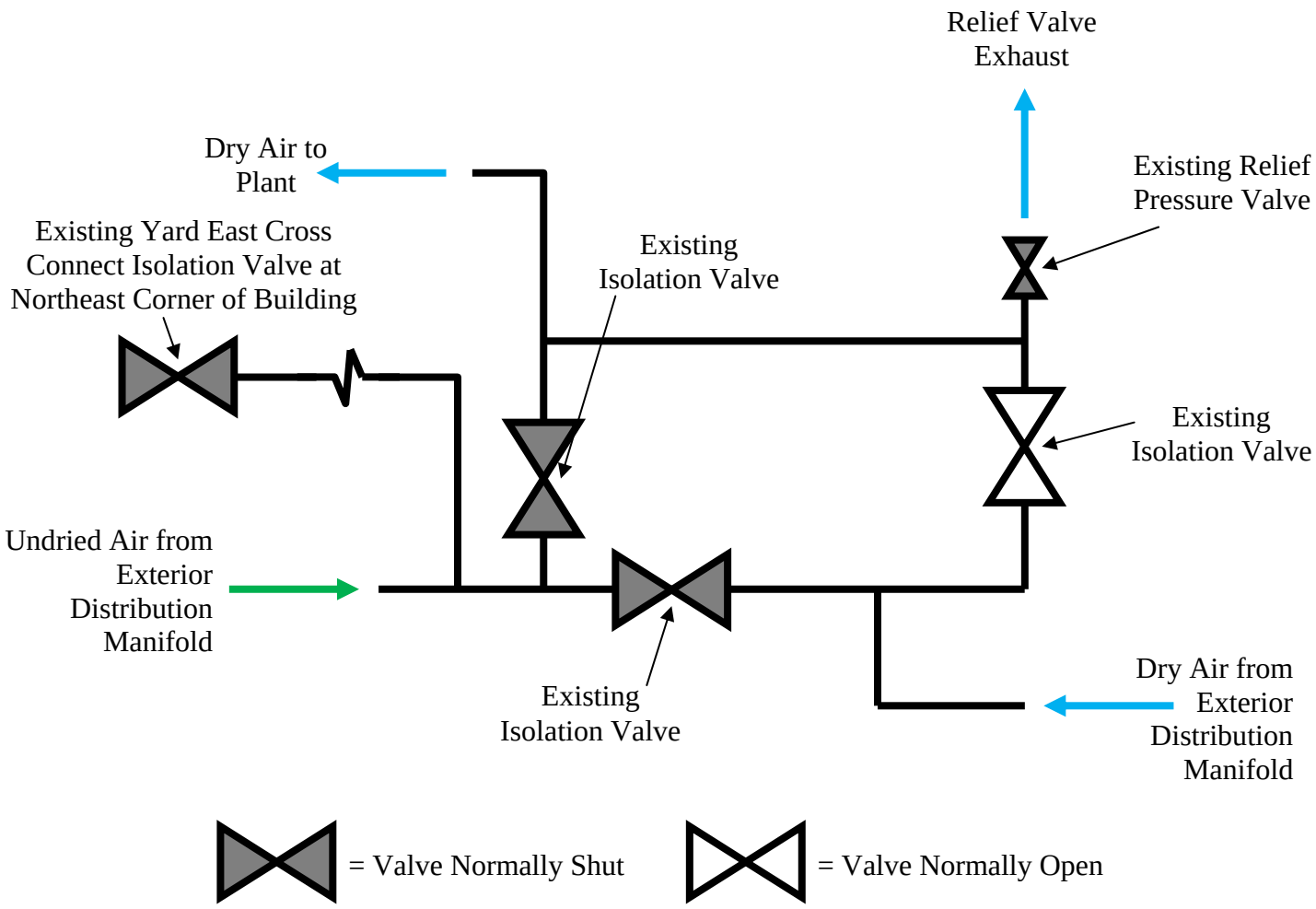

Figure 4 – New Configuration of Interior Air Distribution Manifold

2.3.3.1. The contractor shall relocate / remove existing valves as necessary to configure the exterior and interior manifolds as shown in Figures 2 & 4. The Contractor shall also remove the line feeding air to the pressure reduction valve pilot, and shall cap the port.

2.3.3.2. All piping shall be welded, but shall make flanged connections to the existing manifolds and a new manifold / header in the new air dryer area.

2.3.3.3. In accordance with ASME B31.1, the contractor shall address the piping flexibility and displacement stress requirements for new piping runs, eliminating the possibility of local or system wide overstrain.

2.3.3.4. The contractor shall provide pipe hangers and/or supports, engineered for this project that are designed, located, and installed per ANSI / MSS SP-58, “Pipe

Hangers and Supports – Materials, Design, Manufacture, Selection, Application, and Installation."

2.3.3.5. The contractor shall provide as-built drawings for modified air system at Building 72. One line drawing(s) showing the modifications / additions to the air system and a schematic of the air system shall be provided.

2.4. Testing, Blow Down, and Drying:

2.4.1.1. All new additions to the air system shall be tested in accordance with ASME B31.1. This shall include hydrostatic testing of all new piping. The contractor shall provide the air vents, drains, and ports necessary to perform the testing. The tested portions of the system shall be completely drained, blown down, and dried as soon as possible following completion of the hydrostatic test. Soap bubble testing of the piping system prior to hydrostatic testing is allowed, but the test pressure shall not exceed 10 psi.

2.5. Paint Systems and Labeling:

Air Dryer Equipment Protective Coating:

2.5.1. All external steel surfaces of the air dryers that shall be primed and painted with a coating that is appropriate for the temperatures at which that component will experience during normal operations and shall be tolerant of any lubricants used by the equipment. The coatings shall be applied at the factory. The contractor shall touch up damaged paint coatings following the final assembly of the units in the space, using the air dryer manufacturer's supplied paint.

New Exterior Piping:

2.5.2. All portions of the new 10" steel air lines on the exterior of the Power Plant shall be primed and painted to prevent corrosion. The color shall be gloss black.

Pipe Labeling:

2.5.3. The contractor shall stencil "COMPRESSED AIR" and an arrow showing the direction of flow directly on the 10" air lines at every wall penetration (on both sides of the wall) and at approximately every 50 ft. of pipe. The contractor shall also use white paint to stencil on dark surfaces and black paint to stencil on light colored surfaces.

2.6. Electrical:

General:

2.6.1. The contractor shall power the air dryer equipment. The contractor shall provide all materials and hardware necessary to complete the installation of the air dryer systems.

Design:

2.6.2. The design, selection, and installation of the contractor provided equipment and materials shall comply with the latest editions of NFPA 70 "NEC," NFPA 70E "Standard for Electrical Safety Requirements for Employee Workplaces," and NECA 1-2006, "Standard for Good Workmanship in Electrical Construction."

Conductors:

2.6.3. The contractor shall provide conductors that meet the following requirements:

2.6.3.1. Copper only.

2.6.3.2. Insulation shall be THHN/THWN. Type TW is acceptable for grounds.

2.6.3.3. Minimum #12 AWG, except control wiring is minimum #14 AWG.

2.6.3.4. #12 AWG & larger - stranded.

2.6.3.5. #14 and smaller – solid.

2.6.3.6. Type "NM" cables are prohibited for new work.

2.5.3.6.1 Existing type "NM" embedded in walls & feeding existing wiring devices and utilization equipment shall be allowed. (Existing utilization equipment relocated to new branch circuits shall be considered as new equipment.)

2.6.3.7. Selected and installed per UFC 3-520-01 and UFGS 26 20 00.

2.6.3.8. Color code:

2.5.3.8.1 > 240 V: A Brown B Orange C Yellow.
2.5.3.8.2 240 V & below: A Black B Red C Blue.
2.5.3.8.3 Neutral: White.
2.5.3.8.4 Ground: Green or bare copper.

2.6.3.9. #14 AWG solid for fire alarm circuits.

2.6.3.10. Color Code for Fire Alarm Circuits:
2.5.3.10.1 Annunciation: (+)Red (-)Black.
2.5.3.10.2 Initiation: (+) Orange (-) Yellow.

Wiring Devices:

2.6.4. The contractor shall provide wiring devices that meet the following requirements:

2.6.4.1. Wiring devices shall be “Spec” or “Commercial” grade as a minimum.
2.6.4.2. General purpose toggle switches shall be 120/277 volt rated.
2.6.4.3. Plastic wall plates shall be shatter proof.
2.6.4.4. Ground fault receptacles shall be side wired or screw clamp back wired type. Provide receptacles with through wire protection via the ground fault circuit.
2.6.4.5. Cage clamp terminations on wiring devices are prohibited.
2.6.4.6. Wiring devices shall be screw clamp back wire type when terminating with stranded wire. Side wire termination of stranded wire is prohibited.
2.5.4.6.1 Exception: side wiring of stranded wire is acceptable if terminated with crimp-on connectors.

2.6.4.7. Selected and installed per UFC 3-520-01 and UFGS 26 20 00.

Conduit & Raceway:

2.6.5. The contractor shall provide conduit and raceway that meets the following requirements:

2.6.5.1. Minimum ¾” trade size.
2.6.5.2. RMC – Shall be used:
2.6.5.2.1 In all exterior locations.
2.6.5.2.2 Where buried.
2.6.5.2.3 Where cast into concrete.
2.6.5.2.4 Where exposed to impact/damage from traffic, stored materials, or work processes, i.e. generally all surface mounted interior spaces in Industrial areas below 12 feet AFF and all areas that are subject to crane load traffic.
2.6.5.3. EMT - May be used:
2.6.5.3.1 In interior dry, concealed locations (not cast into concrete)

2.6.5.3.2 In interior exposed/surface mounted applications, e.g. in ceilings, and walls of industrial areas above impact zone, generally acceptable in areas 12 feet AFF that are not subject to crane load traffic.

2.6.5.3.3 EMT connections and couplings shall be made up using steel compression fittings.

2.6.5.3.3.1 Die-cast compression fittings are prohibited.

2.6.5.3.3.2 Set screw fittings are prohibited.

2.6.5.3.4 Outlet Boxes shall be solidly grounded.

2.6.5.3.5 Wiring device yokes shall not be used to provide equipment ground.

2.6.5.3.6 If selected and installed per UFC 3-520-01 and UFGS 26 20 00

Panel Boards:

2.6.6. The contractor shall provide panel boards that meet the following requirements:

2.6.6.1 Panel boards shall be commercial grade with bolt-on circuit breakers. Snap-in circuit breakers are prohibited.

2.6.6.2 Adding new circuits to existing panel boards that have been in service in excess of 30 years shall be coordinated with the PWD ME Electrical Engineering Branch.

2.6.6.3 Series rated circuit breakers are prohibited.

2.6.6.4 In high fault current installations it may be impractical to select circuit breakers with equivalent or greater withstand ratings. In such cases, installation of a properly sized current limiting fuse ahead of the downstream breaker may be considered. Coordinate with PWD ME Electrical Engineering Branch.

2.6.6.5 Selected and installed in accordance with UFC 3-520-01 and UFGS 26 20 00.

2.6.6.5.1 Coordinate with PWD ME Electrical Engineering for breaker settings, which will be determined via electronic analysis of the system.

2.6.6.6 Low voltage switchboards used for distribution of industrial electrical services to shipyard facilities (dry docks, berths) shall be unitized, enclosed switchgear.

2.6.6.6.1 This class of switchgear shall meet the criteria previously stated for general purpose, service distribution as previously indicated. See additional criteria below.

2.6.6.6.2 The fault bracing shall be sized to consider 50% motor contribution.

2.6.6.7 Exterior Locations shall be NEMA 4X, stainless steel or cast malleable iron, galvanized.

2.6.6.8 Interior Dry locations generally may be NEMA 1, except where special exposures apply or the NEC requires, e.g. interior spaces with significant dust and contaminants would require NEMA 12.

Circuit Breakers:

2.6.7. The contractor shall provide circuit breakers that meet the following requirements:

2.6.7.1 When adding to an existing panel, match the same brand within the panel.

2.6.7.2 Provide circuit breaker KAIC equal to or in excess of the rating of the panel and/or the existing breakers.

Identification and Markings:

2.6.8. The contractor shall provide identification and markings that meet the following requirements:

2.6.8.1 When adding to an existing panel the entire circuit directory shall be reprinted and reinstalled under a protective clear plastic sheet.

2.6.8.2 Interior Junction Boxes:

2.6.8.2.1 Mark circuit and voltage on cover in 1” high block lettering with indelible marker.

2.6.8.2.2 Identifier/name, Voltage, source and destination where applicable (e.g. JB 1, 240 V, Ckt 17 from PP-6 to EF-3).

2.6.8.3 Toggle switches & Convenience receptacles.

2.6.8.3.1 Printed tape, black lettering on clear or background color to match plate.

2.6.8.3.2 Include source and circuit (e.g. PP-6, Ckt 13).

3.0 BID OPTION 1 - SCOPE OF WORK:

This section defines additional contract requirements that are not part of the Base Bid. The contractor shall provide pricing for the services and/or equipment specified in this section. The Government may elect to exercise this option, but if it does not, all services and equipment provided as part of the base bid shall be complete and usable at the completion of construction.

Steam Heat Exchangers for Desiccant Regeneration:

3.1.1. Each air dryer shall be provided a steam heat exchanger to heat air to regenerate the desiccant. These heat exchangers, located in the new air dryer area, will be provided in lieu of the electric heaters used to heat the air for desiccant regeneration. Steam is available at 200 psi at approximately 420°F. If lower pressure steam is required, the contractor shall provide all valves necessary to reduce the steam to the appropriate pressure and flow rate. This includes bypass valves and/or redundant legs to allow for the valves to be serviced without interrupting the availability of steam to the heat exchangers. The portions of the steam heat exchangers exposed to steam and condensate shall be manufactured from corrosion resistant materials. During the cooling portion of the regeneration cycle or during times when regeneration is not being performed, the steam heat exchanger shall be automatically bypassed from the air flow by the air dryer's control system. The steam heat exchangers shall also have provisions to allow for safe disassembly, when recommended service of the heat exchanger is required. This requires that the steam heat exchangers be located / oriented to allow for their disassembly, without necessitating the disassembly of surrounding equipment.

Steam and Condensate Lines:

3.1.2. The contractor shall provide the piping, fittings, reducers, valves, hangers, gaskets, and hardware necessary to connect the steam heat exchangers to the 200 psi steam line passing through the new air dryer area. The contractor shall note that there is a 200 psi to 125 psi pressure reduction station in this area and the new steam line shall tap into the upstream side of the pressure reduction station. All steam lines installed shall be insulated to minimize thermal losses and the insulation shall be provided with a resilient protective cover. All steam piping, fittings, reducers, valves, hangers, gaskets, and hardware shall be selected and installed in accordance with ASME B31.1.

3.1.3. The contractor shall provide the piping, steam traps, fittings, reducers, valves, hangers, gaskets, and hardware necessary to pass the condensate from the steam heat exchangers to nearest condensate line capable of transporting the condensate away from the steam heat exchanger. All condensate lines installed shall be insulated to prevent injuries to personnel and the insulation shall be provided with a resilient protective cover.

3.1.4. Perform a hydrostatic test of the additions to the steam system added as part of this bid option. The contractor shall provide the vents, drains, and ports necessary to perform the testing. The tested portions of the system shall be completely drained and dried as soon as possible following completion of the hydrostatic test. Soap bubble testing of the piping system prior to hydrostatic testing is allowed, but the test pressure shall not exceed 10 psi.

Controls Modifications:

3.1.5. The control system for each air dryer shall be configured as necessary to utilize the steam exchanger provided as part of this bid option.

4.0 WARRANTY:

4.1.1. The contractor shall warranty the entirety of the equipment, services, items, and materials provided under this contract for a period of one year from the date that the new system is accepted by the Government and the contract is signed complete. Under this warranty, the contractor shall provide all equipment, materials, and labor to correct any deficiencies with equipment performance, manufacturing defects, software defects, workmanship / installation defects, and/or premature failure of any item or service provided as part of the system.

5.0 BASIS OF BID:

Design Bid Build - Firm Fixed Price:

5.1 The contractor shall provide a firm fixed price for each work item and reflect the value of the material, labor and equipment with a line item total. The line items shall break out equipment costs, materials, labor, and any rental equipment costs associated with specific task.

6.0 GENERAL REQUIREMENTS:

6.1 The means and methods of work associated with this project shall be in accordance with the tasks specified on the enclosed contract documents and the following general requirements:

6.1.1. The project site is an operating Navy Facility. The Contractor shall coordinate work to permit Navy Operations to be performed during the course of work. Delay claims due to periodic work stoppages or changes in work sequence based on impacts from Shipyard operations will not be allowed. The Contractor may need to work weekends to ensure Shipyard operations are not impacted.

6.1.2. All work shall be fully coordinated with the Contracting Officer's Representative and PWD-ME and shall comply with all Station Regulations.

6.1.3. Contractor shall provide all supervision, labor, materials, tools, equipment, and transportation necessary to perform tasks within this project.

6.1.4. The contractor shall provide the services of a qualified independent utility locating company/person(s) to locate any utilities within or under the floor.

6.1.5. Utilities Within and Under Concrete Slabs, Bituminous Asphalt and Other Impervious Surfaces:

Utilities located within and under concrete slabs or pier structures, bridges, parking areas, and the like, are extremely difficult to identify. Whenever contract work involves chipping, saw cutting, or core drilling through concrete, bituminous asphalt or other impervious surfaces, the Contractor shall provide the services of a third party, independent, private locating company to locate any utilities within the limits of work. The third party, independent, private locating company shall locate utility depth by use of Ground Penetrating Radar (GPR), X-ray, bore scope, or ultrasound prior to the start of demolition and construction. Outages to isolate utility systems must be used in circumstances where utilities are unable to be positively identified. The use of historical drawings does not alleviate the contractor from meeting this requirement.

6.1.6. The Contractor shall ensure work is conducted and completed in such a manner to allow access for emergency response vehicles during and after project execution.

6.1.7. Contractor lay down space, if provided, is to consist of an area as shown on the contract documents. Any additional space required to complete this work must first be approved by the Contracting Officer.

6.1.8. The Contractor shall dispose of all removed materials in accordance with Shipyard, local, State and Federal regulations.

6.1.9. The Contractor shall be responsible for any damage utilities which occur during the course of this work.

6.1.10. The Contractor shall restore disturbed areas surrounding limits of work to original conditions.

6.1.11. Upon completion of project work, contractor shall clean work area free of equipment, tools, materials, debris and dust.

7.0 PERIOD OF PERFORMANCE:

PERIOD OF PERFORMANCE **300 Days**

The Contractor shall mobilize and commence work as soon as reasonably feasible from date of contract award but not more than 10 weeks after award.

8.0 NOTIFICATION OF COMMENCEMENT:

The Contractor shall arrange and hold a pre-construction conference with all interested parties prior to start of work. All pre-requisite submittals as listed herein in the “Submittals” paragraph shall be submitted at this pre-construction conference. The Contractor shall confirm the construction start date with the Contracting Officer Representative at least 48 hours prior to start date. Preparing and sending minutes of all meetings to the attendees are the responsibility of the Contractor.

9.0 WINTER CONSTRUCTION CONDITIONS:

With regard to the installation of the 10” air lines and connecting to the exterior air manifold, this Task Order will require construction operations during winter weather. The Contractor shall include all materials, labor, equipment, and supervision required to perform the above work in cold weather conditions.

10.0 HAZARDOUS MATERIALS/EXISTING CONDITIONS:

The following hazardous materials are either known or assumed to be present within the work area based upon recent tests coordinated by PWD-ME or from review of record documents. The Contractor shall provide means and methods of work in conformance with all applicable local, State, Federal, and Shipyard Regulations pertaining to working within or near these materials. .

10.1 Asbestos: There is a pipe on the western side of the work area insulated with asbestos containing material. The contractor shall not disturb this pipe or its insulation.

10.2 Crystalline Silica-containing Dust: Exposure controls (i.e. water suppression and/or filtered local ventilation) for crystalline silica-containing dust shall be utilized during impacts to masonry materials including during demo of the footing for the aforementioned set of stairs (and the existing concrete footings in the new dryer footprint area should demo be necessary) and during the making of openings for the supply air lines on the east outside wall of the building.

11.0 CODE/REGULATORY REQUIREMENTS:

All work performed by the General Contractor shall be in accordance with the requirements specified in the General Specifications Division 1 and all local, State and Federal Codes.

12.0 ENVIRONMENTAL PROTECTION REQUIREMENTS:

12.1. The Contractor shall prepare and submit an Environmental Protection Plan in accordance with the requirements specified in 01 57 19.

12.2. This task order does not have a separate State or Federal permit.

12.3. Properly dispose of concrete washout water, wet saw cutting dust, and other wet debris that is generated while working with concrete. MEDEP has a BMP for disposal of concrete washout water that can be used. Ensure that paint chips are contained within building, collected, and do not make it to storm water drains.

13.0 SITE SUPERVISION:

The Contractor shall provide a Site Superintendent in accordance with the requirements specified in the General Specifications. The Site Superintendent shall be present at the work location at all times work is being performed for this task order. The Site Superintendent may not perform the duties of the SSHO or the QC Manager.

14.0 SAFETY:

14.1. The Contractor shall provide a competent Site Safety and Health Officer (SSHO) in accordance with the requirements specified in the MCJOC General Specifications to implement and manage the Contractors Safety and Health Program. The SSHO may not perform the duties of the Site Superintendent. The SSHO may perform the duties of the QC Manager.

14.2. The Contractor shall be responsible for maintaining a work site compliant with EM 385-1-1 Safety and Health Requirements Manual (2014 Edition, including latest errata and changes) and all other OSHA regulations associated with the completion of the work.

14.3. The Contractor shall ensure all work completed under this task order meets the requirements specified in EM 385-1-1 (2008 Edition, including latest errata and changes).

14.4. All manholes are confined spaces. Entry and construction shall meet the requirements for confined spaces in EM-385-1-1 (2008 Edition, including latest errata and changes). **All manholes shall be tested for hazardous conditions (gas freed) prior to opening.**

14.5. The contractor shall prepare a project specific Accident Prevention Plan (APP) and Activity Hazard Analysis (AHA) for the work.

15.0 QUALITY CONTROL:

Provide a Site QC Manager in accordance with the requirements specified in the General Specifications at the work site to implement and manage the QC Program. The QC Manager may perform the duties of the SSHO. The QC Manager may not perform the duties of the Site Superintendent.

16.0 MEASUREMENTS:

Contractor shall verify all measurements in the field prior to starting work. Coordinate with the Contracting Officer Representative when scheduling visits to the site prior to construction activities.

17.0 CLEANUP:

Contractor shall clean up the job site daily, and shall use his or her own equipment to clean the work area to the satisfaction of the Contracting Officer Representative.

18.0 SUBMITTALS

Provide submittals for government acceptance as listed below:

18.1. The following Pre-Requisite Submittals shall be submitted prior to or at time of Pre-Con as described above:

18.1.1. Detailed Work Plan

18.1.2. Detailed MS Office Project Schedule

18.1.3. Construction Site Plan

18.1.4. Accident Prevention Plan specific to the work.

18.1.5. Activity Hazard Analysis specific to the work.

18.1.6. Environmental Protection Plan

18.1.7. All drawings for the layout of new equipment, new piping, and valves ("one line drawings" / schematics), hanger design, electrical design ("one line drawings" / schematics), and planned modifications to the existing air system at the Power Plant ("one line drawings" / schematics), to be provided as part of this contract.

18.1.8. Detailed manufacturers' information for all equipment to be supplied as part of this contract, sufficient to determine if the equipment meets the performance requirements described in this document.

18.2. Provide submittals as defined herein and in the contract documents including, but not limited to, the following in accordance with Section 01 33 00 Submittal Procedures:

18.2.1. Air dryer factory acceptance testing documentation and results, signed by a representative from the air dryer's manufacturer.

18.2.2. Air dryer post installation acceptance testing documentation and results, signed by a representative from the air dryer's manufacturer.

18.2.3. Operations and maintenance manuals for all equipment to be provided under this specification.

18.2.4. Catalog cuts for all valves to be provided under this specification.

18.2.5. As-built drawings showing the layout of new equipment, new piping, and valves ("one line drawings" / schematics), hanger design, electrical design ("one line drawings" / schematics), and planned modifications to the existing air system at the Power Plant ("one line drawings" / schematics), to be provided as part of this contract.

18.2.6. Catalog cuts for all electrical materials provided under this specification.

19.0 AVAILABILITY AND USE OF UTILITY SERVICES

The following utilities will be made available to the Contractor without charge:

- Electricity
- Potable Water

See Section 01 50 00 for additional requirements.

20.0 AS-BUILTS

Revise 2 sets of hard copy paper contract drawings by red-line process described herein to reflect the current as-built conditions during the prosecution of the project. The Contractor shall keep the working as-built drawings current and shall keep at least one set available on the jobsite for review at all times. Changes from the contract plans which are made in the work or additional information which might be uncovered in the course of construction must be accurately and neatly recorded as they occur by means of details and notes. Provide (1) set of working as-built drawings (CADD) in the specified software and format after the completion of each definable feature of work as listed in the Contractor Quality Control Plan to the Contracting Officer.

The Contractor shall employ personnel proficient in the preparation of CADD drawings to modify the contract drawings or prepare additional new drawings sheets required. Modifications, to the Record Drawings must be equal in quality and detail to that of the original contract drawings. Line colors, line weights, lettering, layering conventions, and symbols shall remain consistent throughout the record drawing set, regardless of either as-built or record drawing. If additional drawings are required, the drawings shall be prepared using the specified electronic file format applying, the same graphic standards specified for original drawings. The title block and drawing border to be used for any new final record drawings shall be identical to that used to create the contract drawings. Modifications, additions and corrections to the contract drawings shall be made to the electronic AutoCAD file(s). The Contractor shall be furnished with the original contract drawing files in the AutoCAD software format currently in use by PWD-ME. The electronic files shall be supplied on compact disc, (CD). The contractor shall provide all computer software and hardware necessary to prepare final record drawing set. The Contracting Officer shall

review final record drawing set for accuracy and return them to the Contractor for required corrections, changes, additions, and deletions.

21.0 ONSITE TRAINING AND TRAINING MATERIALS

The contractor shall provide six separate four hour onsite training sessions on the operation and maintenance of the new air dryer systems. Two four hour sessions will be held in one day, allowing each of the Plant's operators the opportunity to receive the training. Each trainee shall receive a hardcopy of the Operations and Maintenance manual, plus any additional course materials, all provided in one or more binders. This training shall be conducted by the air dryer's manufacturer. The course instruction shall be split between classroom lecture and hands-on operation of the equipment in the field. Three to five students will be present for each training session. The time and location of the training shall be coordinated with the Power Plant General Foreman and the Contracting Officer.

22.0 PROJECT COORDINATION

Coordinate all work with the Contracting Officer Representative, Power Plant General Foreman, and other Contractors working in the area.

23.0 SPECIFIED EXPERIENCE

The air dryer manufacturer must have a minimum of 20 years of experience in the design and manufacture of industrial air dryers.

PORTSMOUTH NAVAL SHIPYARD
KITTERY, ME

BUILDING 72 REPLACE COMPRESSED AIR DRYERS

LIST OF DRAWINGS

SHEET	SHEET NO.	PWD–ME NO.	NAVFAC DWG. NO.	DRAWING TITLE
1 OF 4	G001	072–16–2240	12729932	TITLE SHEET
2 OF 4	G002	072–16–2241	12729933	GENERAL NOTES
3 OF 4	M101	072–16–2242	12729934	B72 POWER PLANT – BASEMENT FLOOR MECHANICAL PLAN
4 OF 4	E101	072–16–2243	12729935	B72 POWER PLANT – BASEMENT FLOOR ELECTRICAL PLAN AND ONE LINE DIAGRAM

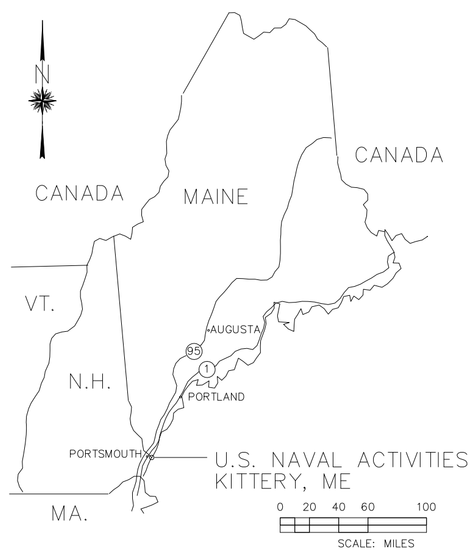

AREA MAP

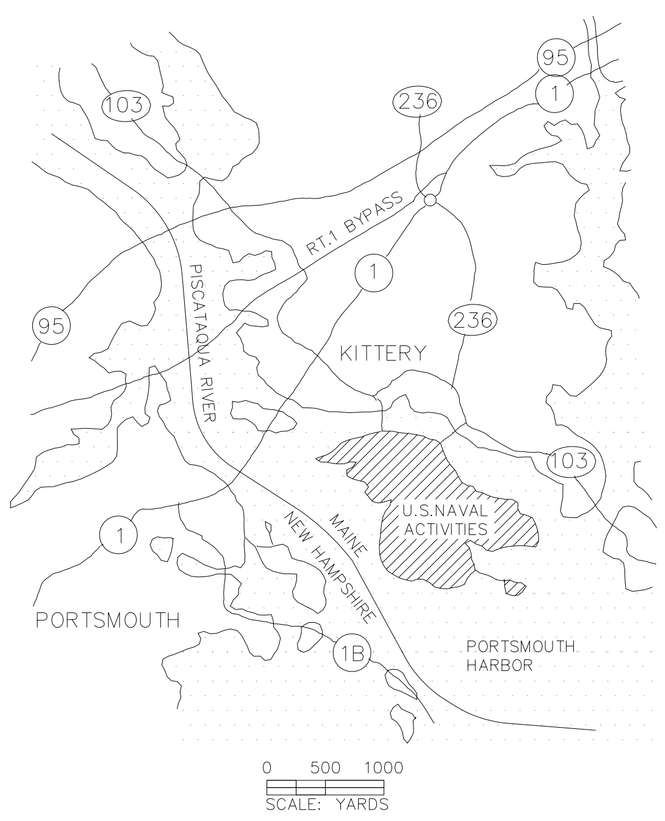

VICINITY MAP

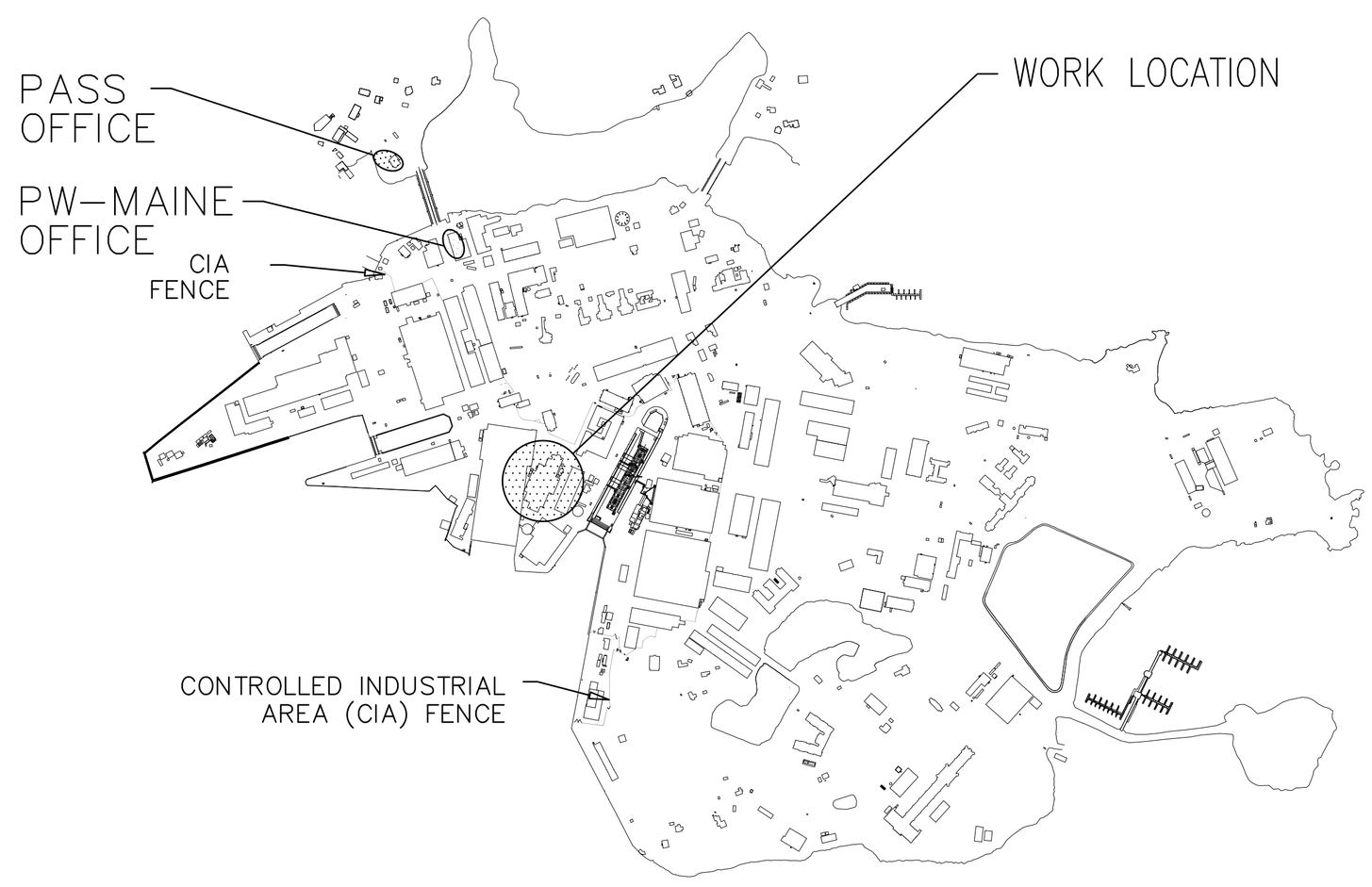

SITE PLAN
NOT TO SCALE

ELEVATION, SECTION OR DETAIL SYMBOLS

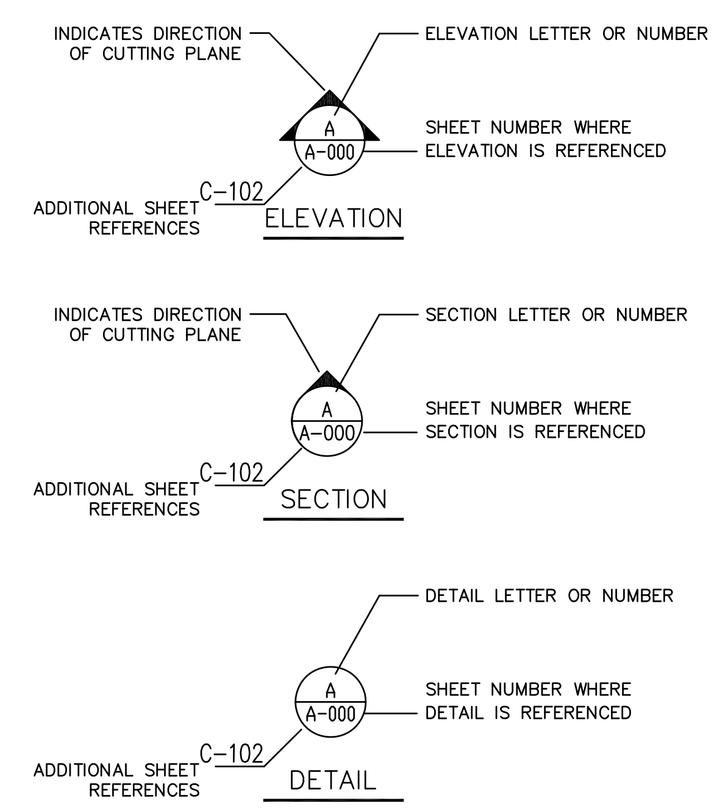

MARK	DATE	DESCRIPTION	PKG
0	MM/DD/YYYY	100% SUBMISSION	DM

NAVFAC

PRELIMINARY NOT FOR CONSTRUCTION

SEAL

PWD-MAINE IN HOUSE DESIGN

APPROVED

FOR COMMANDER NAVFAC

ACTIVITY

SATISFACTORY TO DATE

DESIGNER MICHAEL MELVIN
DRAWN BY SPS
CHECKED BY
DESIGN MANAGER XXX
PROJECT MANAGER
FEAD/PM&E
FIRE PROTECTION X

DEPARTMENT OF THE NAVY
NAVAL FACILITIES ENGINEERING COMMAND
PUBLIC WORKS DEPARTMENT – MAINE
NAVAL FACILITIES ENGINEERING COMMAND – MID-ATLANTIC
NAVAL SHIPYARD – PORTSMOUTH, NH
PORTSMOUTH NAVAL SHIPYARD KITTERY, MAINE
BUILDING 72 CENTRAL POWER PLANT LOCATION

TITLE SHEET

EPROJECT NO.: 1364182
NAVFAC DRAWING NO. 12729932
SHEET 1 OF 4
G001 072-16-2240

DRAWFORM REVISION: 10 OCTOBER 2014

eProject: 1364182

Attachment (1)

Page 1 of 4

FILE NAME: P:\ME\Portsmouth Naval Shipyard\Buildings\2017_1364182_B72_Replace Compressed Air Dryers\B_Design\Drawings\Autocad Files\1364182_B72-Replace Compressed Air Dryers - Under Trim Compressors.dwg LAYOUT NAME: G001 PLOTTED: Wednesday, July 13, 2016 - 6:50am USER: daniel.j.allen3

GENERAL NOTES

1. PLANS HAVE BEEN COMPILED FROM EXISTING RECORD PLANS, ON-SITE FIELD SURVEY AND OBSERVATION.

2. UNLESS OTHERWISE NOTED, ALL EXISTING FEATURES DESIGNATED ON THE PLANS TO REMAIN. ADJACENT FEATURES WILL BE VERIFIED, LOCATED, AND PROTECTED DURING ALL PHASES OF CONSTRUCTION.

3. SALVAGED ITEMS ARE TO BECOME THE PROPERTY OF THE GOVERNMENT.

4. FEATURES MAY BE SHOWN WITHIN THE LIMIT OF WORK THAT ARE NOT EXPLICITLY CALLED OUT FOR REMOVAL OR DEMOLITION. DEMOLISH ALL FEATURES WITHIN THE LIMIT OF WORK REQUIRED TO COMPLETE THE WORK OF THE PROJECT.

5. PREVENT ANY DISTURBANCE OR DAMAGE TO ADJACENT PROPERTIES.

6. YELLOW PLASTIC:
CONTRACTORS SHALL NOT USE YELLOW OR ORANGE-YELLOW COLORED MATERIALS FOR THE FOLLOWING PURPOSES: PROTECTIVE CLOTHING, HOODS, SHEETING, TARPS, POLYETHYLENE BOTTLES OR OTHER CONTAINERS, TAPES, BAGS, BANDING, IDENTIFICATION MARKS ON TOOLS, BOUNDARY MARKERS, RIBBONS, VENT DUCTS, ETC. CONTRACTOR GENERATED YELLOW COLORED WASTE SHALL BE DISPOSED OF BY THE CONTRACTOR OFF-YARD. SHIPYARD REFUSE CONTAINERS SHALL NOT BE USED FOR THE DISPOSAL OF YELLOW COLORED WASTE MATERIALS. YELLOW COLORED ITEMS SUCH AS DESCRIBED ABOVE ARE OF SPECIAL SIGNIFICANCE WITHIN THE SHIPYARD AND ARE SUBJECT TO STRICT CONTROLS. YELLOW COLORED CONTRACT GENERATED DEBRIS SHALL BE BAGGED IN NON-TRANSLUCENT CONTAINERS, AND PROMPTLY REMOVED FROM PORTSMOUTH NAVAL SHIPYARD.

7. CONTRACTOR SHALL REPORT ALL SPILLS AND LEAKS OF OIL OR OTHER HAZARDOUS SUBSTANCES. (IE OIL, ANTIFREEZE, CHEMICALS, ETC.) OCCURRING DURING THE PERFORMANCE OF THIS CONTRACT IMMEDIATELY UPON DISCOVERY, REGARDLESS OF THE QUANTITY. CALL THE FIRE DEPARTMENT AT EXTENSION 2333 TO REPORT THE SPILL. THE GOVERNMENT RESERVES THE RIGHT TO CLEAN UP, PACKAGE AND DISPOSE OF CONTRACTOR SPILLS OCCURRING ON THE SHIPYARD, AND BILL SUCH COSTS TO THE CONTRACTOR.

8. UNFORESEEN HAZARDOUS MATERIAL
THE DESIGN HAS IDENTIFIED MATERIALS SUCH AS PCB, LEAD PAINT, AND FRIABLE AND NON-FRIABLE ASBESTOS. IF ADDITIONAL MATERIAL, NOT INDICATED, THAT MAY BE HAZARDOUS TO HUMAN HEALTH UPON DISTURBANCE DURING CONSTRUCTION OPERATIONS IS ENCOUNTERED, STOP THAT PORTION OF WORK AND NOTIFY THE CONTRACTING OFFICER IMMEDIATELY.

UTILITY NOTES:

1. THE CONTRACTOR SHALL VERIFY ALL EXISTING UTILITY INFORMATION AND TIE IN LOCATIONS NEEDED TO COMPLETE THE DESIGN OF NEW UTILITY SYSTEMS AND SITE IMPROVEMENTS. VERIFICATION METHODS SHALL INCLUDE BUT NOT BE LIMITED TO TESTS PITS AND CCTV TO VERIFY LOCATION, ELEVATION, SIZE, MATERIAL, AND ANY OTHER INFORMATION REQUIRED TO COMPLETE THE DESIGN.

2. UTILITIES NOT SHOWN ON THESE PLANS MAY EXIST. THE LOCATION, ELEVATION, SIZE AND MATERIAL OF ALL UTILITIES WILL BE VERIFIED BEFORE PROCEEDING WITH CONSTRUCTION. ALL UTILITY LINES AND ASSOCIATE STRUCTURES, NOT AFFECTED BY THIS PROJECT WILL BE PROTECTED THROUGHOUT ALL PHASES OF WORK.

3. THE LOCATION OF UNDERGROUND UTILITIES WITHIN THE LIMITS OF THE EXCAVATION OR GROUND PENETRATING WORK WILL BE LOCATED PRIOR TO COMMENCING ANY EXCAVATION OR GROUND PENETRATING WORK. "DIG SAFE" (1-888-344-7233) WILL BE NOTIFIED WITHIN 14 CALENDAR DAYS, BUT NO MORE THEN 30 DAYS, PRIOR TO THE COMMENCEMENT OF THE EXCAVATION OR GROUND PENETRATING ACTIVITY. THE STATE OF MAINE "DIG SAFE" LAW (TITLE 23, MRSA 3360-A) WILL BE FULLY COMPILED WITH.

4. THE EXCAVATOR SHALL PREPARE A "PWD ME DIG SAFE UTILITY LOCATE REQUEST FORM" AT LEAST 14 CALENDAR DAYS PRIOR TO THE COMMENCEMENT OF THE EXCAVATION OR GROUND PENETRATING ACTIVITY AND SUBMIT THE FORM TO THE CONTRACTING OFFICER (PLEASE SEE QC MANAGER FOR FORM).

5. THE GOVERNMENT WILL LOCATE AND MARK THE UNDERGROUND UTILITIES WITHIN 14 CALENDAR DAYS OF RECEIVING THE DIG SAFE NOTIFICATION.

6. EXCAVATION OR GROUND PENETRATION ACTIVITIES CAN NOT COMMENCE UNTIL THE UTILITIES HAVE BEEN MARKED IN THE FIELD AND THE PWD ME DIG SAFE UTILITY LOCATE REQUEST FORM HAS BEEN RETURNED INDICATING THE PWD ME DIG SAFE REVIEW PROCESS HAS BEEN COMPLETED AND EXCAVATION HAS BEEN APPROVED BY THE CONTRACTING OFFICER.

7. IF THE EXCAVATION OR GROUND PENETRATING ACTIVITIES DO NOT COMMENCE WITHIN 27 DAYS OF DIG SAFE NOTIFICATION OR THE EXCAVATION WORK IS EXPANDED OUTSIDE THE LOCATION ORIGINALLY SPECIFIED IN THE NOTIFICATION, THE EXCAVATOR SHALL RE-NOTIFY DIG SAFE, THE CONTRACTING OFFICER AND THE PWD ME DIG SAFE COORDINATOR.

8. THE CONTRACTOR SHALL MAINTAIN THE UTILITY MARKINGS THROUGHOUT THE CONTRACT PERIOD. IF ADDITIONAL MARKINGS ARE REQUIRED, THE EXCAVATOR SHALL RE-NOTIFY DIG SAFE, THE CONTRACTING OFFICER, AND THE PWD ME DIG SAFE COORDINATOR AT 207-438-1082.

CONSTRUCTION NOTES:

1. ALL WORK REQUIRED BELOW THE HIGH WATER LINE SHALL BE COMPLETED AT LOW TIDE.

2. REPAIR AND REPLACEMENT WORK SHALL BE LIMITED TO THE EXISTING FOOTPRINT OF THE BOAT RAMP. NO FILL MATERIAL SHALL BE PLACED OUTSIDE THE LIMITS OF THE BOAT RAMP.

3. THE CONTRACTOR SHALL COORDINATE MATERIAL STORAGE AND LAYDOWN AREAS WITH CONTRACTING OFFICER.

4. ALL CONSTRUCTION MATERIALS SHALL BE TRANSPORTED TO AND FROM THE SITE IN COVERED VEHICLES. THE CONTRACTOR SHALL VACUUM ASSISTED STREET SWEEPER AVAILABLE AT THE SITE ON A DAILY BASIS TO KEEP TRAFFIC AREAS CLEAN.

5. THE CONTRACTOR SHALL BE RESPONSIBLE FOR COORDINATING WITH PORTSMOUTH SHIPYARD OPERATIONS DURING THE PROCESS OF THE WORK.

6. THE CONTRACTOR SHALL SUBMIT A DETAILED CONSTRUCTION SEQUENCING PLAN FOR REVIEW AND APPROVAL PRIOR TO CONSTRUCTION.

7.

8. THE CONTRACTOR SHALL BE RESPONSIBLE FOR FOR MAINTAINING SECURITY AT ALL TIMES DURING CONSTRUCTION.

9. CONTRACTOR SHALL COMPLY WITH ALL APPLICABLE O.S.H.A. REGULATIONS AND SAFETY REQUIREMENTS.

10. ALL CONSTRUCTION SIGNS SHALL BE DESIGNED TO WITHSTAND 50MPH WINDS VELOCITY WINDS AND ARE PREPARED BY A PROFESSIONAL SIGN COMPANY WITH A MINIMUM OF THREE (3) YEARS EXPERIENCE.

11. WORKING HOURS SHALL COMPLY WITH PNSY.

12. WHERE CONTRACTOR REMOVES EXISTING SITE FEATURES THAT ARE TO REMAIN, TO FACILITATE INSTALLATION OF NEW WORK FOR THIS PROJECT, CONTRACTOR SHALL REPLACE THE EXISTING SITE FEATURES AT CONTRACTORS EXPENSE.

13. THE CONSTRUCTION LIMIT LINE SHOWN ON DRAWING IS AN APPROXIMATION OF THE CONSTRUCTION LIMITS. THE CONTRACTOR IN COORDINATION WITH THE OWNER. OWNER MAY MODIFY THIS LINE TO ACCOMMODATE THE EFFICIENCY OF CONSTRUCTION PROJECT.

14. ALL CONSTRUCTION DETAILS AND SPECIFICATION ARE PROVIDED TO MEET NAVFAC MID ATLANTIC PUBLIC WORKS DEPARTMENT MAINE FOR PORTSMOUTH NAVAL SHIPYARD.

TRAFFIC NOTES:

1. THE CONTRACTOR SHALL BE RESPONSIBLE FOR MAINTAINING TRAFFIC FLOW DURING THE CONSTRUCTION.

2. THE CONTRACTOR SHALL BE RESPONSIBLE FOR MAINTAINING TRAFFIC FLOW DURING THE PROGRESS OF THE WORK. A DETAILED TRAFFIC CONTROL PLAN SHALL BE SUBMITTED FOR REVIEW AND APPROVAL PRIOR TO CONSTRUCTION. THE TRAFFIC CONTROL PLAN SHALL CONSIDER ALL AFFECTED PORTSMOUTH SHIPYARD OPERATIONS. THE CONTRACTOR SHALL UPDATE THE TRAFFIC CONTROL PLAN AS REQUIRED DURING THE PROJECT.

3. THE CONTRACTOR SHALL BE RESPONSIBLE FOR MAINTAINING EXISTING TRAFFIC CONTROL SIGNAGE AND INFORMATIONAL SIGNS DURING THE PROCESS OF WORK.

4. TRAFFIC CONTROL DEVICES SHALL BE PROVIDED BY THE CONTRACTOR.

5. THE CONTRACTOR SHALL PROVIDE POST MOUNTED AND WALL MOUNTED TRAFFIC CONTROL AND INFORMATION SIGNS IN ACCORDANCE WITH THE MANUAL ON UNIFORM TRAFFIC CONTROL DEVICES FOR STREETS AND HIGHWAYS, AS PUBLISHED BY THE DEPARTMENT OF COMMERCE.

AS BUILT NOTES:

1. PLANS HAVE BEEN COMPILED FROM EXISTING RECORD PLAT CONTRACTOR SHALL REVISE 2 SETS OF PAPER DRAWINGS BY RED-LINE PROCESS TO SHOW THE AS-BUILT CONDITIONS DURING THE PROSECUTION OF THE PROJECT. THE CONTRACTOR SHALL KEEP THE AS-BUILT DRAWINGS CURRENT ON A WEEKLY BASIS AND AT LEAST ONE SET AVAILABLE ON THE JOB SITE AT ALL TIMES. THE PLANS SHALL BE PREPARED IN ACCORDANCE WITH THE REQUIREMENTS SPECIFIED IN SECTION 01 78 00.00 22 CLOSEOUT SUBMITTALS.

2. CHANGES FROM THE CONTRACT PLANS WHICH ARE MADE IN THE WORK OR ADDITIONAL INFORMATION WHICH MIGHT BE UNCOVERED IN THE COURSE OF CONSTRUCTION MUST BE ACCURATELY AND NEATLY RECORDED AS THEY OCCUR BY MEANS OF DETAILS AND NOTES. THE CONTRACTOR SHALL PREPARE AND PROVIDE TO THE CONTRACTING OFFICER WORKING RECORD (AS-BUILT) DRAWINGS AFTER THE COMPLETION OF EACH DEFINABLE FEATURE OF WORK AS LISTED IN THE CONTRACTOR QUALITY CONTROL PLAN (FOUNDATIONS, UNDERGROUND UTILITIES, STRUCTURAL STEEL, ETC., AS APPROPRIATE FOR THE PROJECT). IF THE CONTRACTOR FAILS TO MAINTAIN THE WORKING AND FINAL RECORD DRAWINGS AS SPECIFIED HEREIN, THE CONTRACTING OFFICER WILL DEDUCT FROM THE MONTHLY PROGRESS PAYMENT AN AMOUNT REPRESENTING THE ESTIMATED COST OF MAINTAINING THE RECORD DRAWINGS. THIS MONTHLY DEDUCTION WILL CONTINUE UNTIL AN AGREEMENT CAN BE REACHED BETWEEN THE CONTRACTING OFFICER AND THE CONTRACTOR REGARDING THE ACCURACY AND COMPLETENESS OF UPDATED DRAWINGS. THE CONTRACTOR SHALL SHOW ON THE WORKING AND FINAL RECORD DRAWINGS, BUT NOT LIMITED TO, THE FOLLOWING INFORMATION:

A. THE ACTUAL LOCATION (ELEVATION AND HORIZONTAL COORDINATES), MATERIALS AND SIZES OF ALL SUB-SURFACE UTILITY LINES. IN ORDER THAT THE LOCATION OF THESE LINES AND APPURTENANCES MAY BE DETERMINED IN THE EVENT THE SURFACE OPENINGS OR INDICATORS BECOME COVERED OVER OR OBSCURED, SHOW BY OFFSET DIMENSIONS TO TWO PERMANENTLY FIXED SURFACE FEATURES THE END OF EACH RUN INCLUDING EACH CHANGE IN DIRECTION ON THE RECORD DRAWINGS OR HORIZONTAL COORDINATES BASED ON THE SHIPYARD DATUM. LOCATE VALVES, FITTINGS, SPLICE BOXES AND SIMILAR APPURTENANCES BY DIMENSIONING ALONG THE UTILITY RUN FROM A REFERENCE POINT. ALSO, RECORD THE DEPTH BELOW THE SURFACE OF EACH RUN OF PIPE, FITTINGS, VALVES, ETC.

B. 'THE LOCATION AND DIMENSIONS OF ANY CHANGES WITHIN THE BUILDING STRUCTURE.

C. CORRECT GRADE, ELEVATIONS, CROSS SECTION, OR ALIGNMENT OF ROADS, EARTHWORK, STRUCTURES OR EXISTING AND NEW UTILITIES IF ANY CHANGES WERE MADE FROM CONTRACT PLANS.

D. CHANGES IN DETAILS OF DESIGN OR ADDITIONAL INFORMATION OBTAINED FROM WORKING DRAWINGS SPECIFIED TO BE PREPARED AND/OR FURNISHED BY THE CONTRACTOR; INCLUDING BUT NOT LIMITED TO FABRICATION, ERECTION, INSTALLATION PLANS AND PLACING DETAILS, PIPE SIZES, INSULATION MATERIAL, DIMENSIONS OF EQUIPMENT FOUNDATIONS, ETC.

E. CHANGES OR MODIFICATIONS WHICH RESULT FROM THE FINAL INSPECTION.

F. WHERE CONTRACT DRAWINGS OR SPECIFICATIONS PRESENT OPTIONS, SHOW ONLY THE OPTION SELECTED FOR CONSTRUCTION ON THE FINAL AS-BUILT PRINTS.

G. SYSTEMS DESIGNED OR ENHANCED BY THE CONTRACTOR, SUCH AS HVAC CONTROLS, FIRE ALARM, FIRE SPRINKLER, AND IRRIGATION SYSTEMS.

H. MODIFICATIONS (INCLUDE WITHIN MODIFICATION PRICING THE COST TO CHANGE WORKING AND FINAL RECORD DRAWINGS TO REFLECT MODIFICATIONS) AND COMPLIANCE WITH THE PROCEDURES SPECIFIED IN SECTION 01 78 00.00 22 CLOSEOUT SUBMITTALS.

I. WHERE UTILITY LOCATIONS DIFFER FROM THOSE IDENTIFIED ON THE PLANS.

REV	DATE	DWN	NO.REPRESENTS	PMS
		DM	MM/DD/YYYY	NONSUBMISSION XX.XX	0

NAVFAC

PRELIMINARY NOT FOR CONSTRUCTION

SEAL

PWD-MAINE IN HOUSE DESIGN

APPROVED

FOR COMMANDER NAVFAC

ACTIVITY

SATISFACTORY TO DATE

DESIGNER XXX
DRAWN BY SPS
CHECKED BY
DESIGN MANAGER XXX
PROJECT MANAGER
FEAD/PM&E
FIRE PROTECTION X

DEPARTMENT OF THE NAVY
NAVAL FACILITIES ENGINEERING COMMAND
PUBLIC WORKS DEPARTMENT - MAINE
PORTSMOUTH NAVAL SHIPYARD

NAVAL FACILITIES ENGINEERING COMMAND ~ MID-ATLANTIC
NAVAL SHIPYARD ~ PORTSMOUTH, NH
KITTERY, MAINE

BUILDING 72 CENTRAL POWER PLANT
BASEMENT FLOOR PLAN

GENERAL NOTES

EPROJECT NO.: 1364182

NAVFAC DRAWING NO.
12729933

SHEET 2 OF 4

G002 | 072-16-2241

DRAWFORM REVISION: 10 OCTOBER 2014

eProject: 1364182

Attachment (1)

Page 2 of 4

FILE NAME: P:\ME\Portsmouth Naval Shipyard\Buildings\2017_1364182_B72_Replace Compressed Air Dryers\B_Design\Drawings\Autocad Files\1364182_B72-Replace Compressed Air Dryers - Under Trim Compressors.dwg LAYOUT NAME: G002 PLOTTED: Wednesday, July 13, 2016 - 6:50am USER: daniel.j.allen3

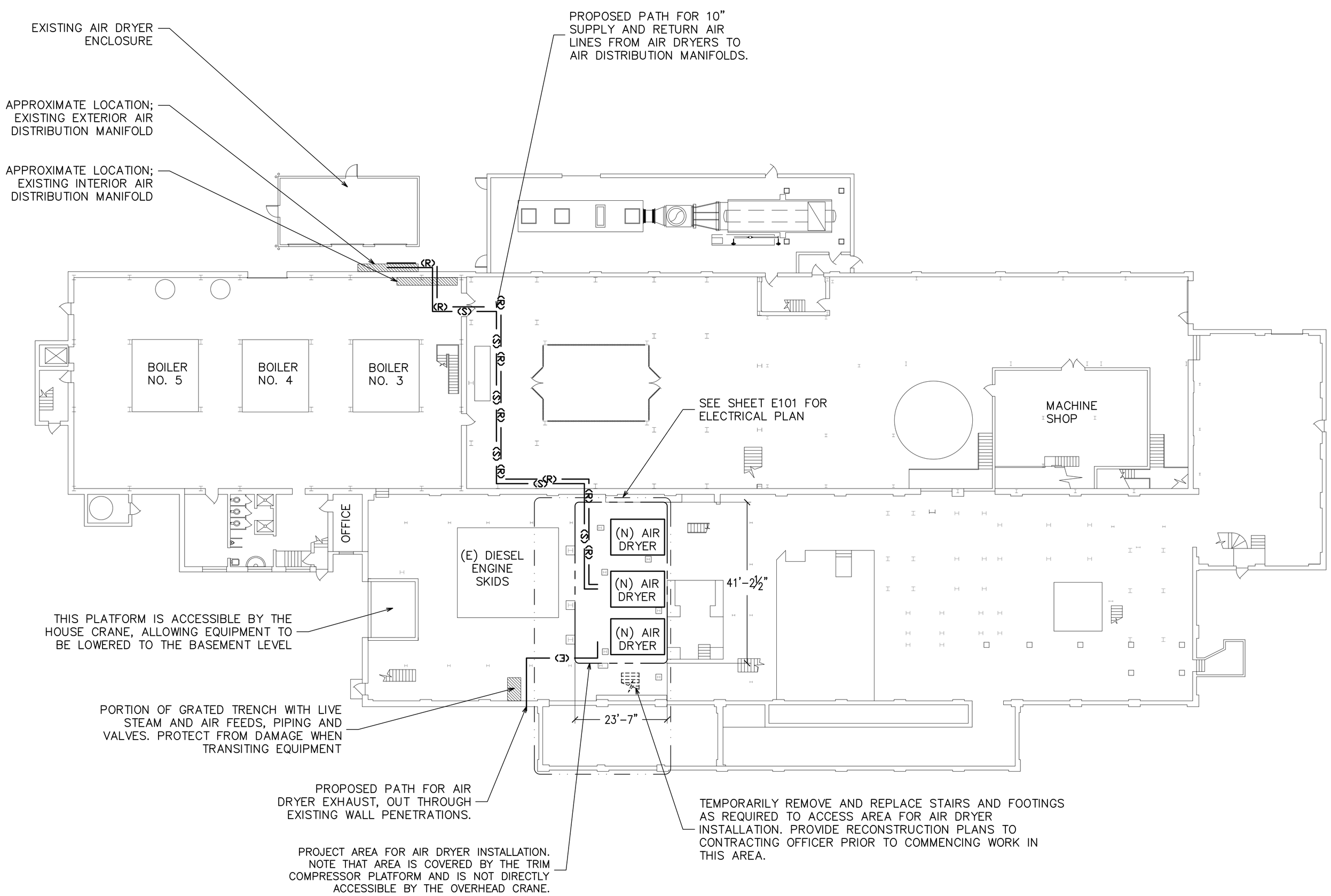

B72 POWER PLANT - BASEMENT FLOOR MECHANICAL PLANS

SCALE 1/16"=1'

GENERAL SHEET NOTES

1. REPLACEMENT AIR DRYERS TO BE INSTALLED UNDER TRIM COMPRESSOR PLATFORM

GRAPHIC SCALE

1/16" = 1' 1 6" 0 1 2 3 scale feet

CHECK GRAPHIC SCALE BEFORE USING

MARK	DATE	NON/RESPONSE	PM'S
0	MM/DD/YYYY	NON/SUBMISSION	DM

NAVFAC

PRELIMINARY NOT FOR CONSTRUCTION

SEAL

PWD-MAINE IN HOUSE DESIGN

APPROVED

FOR COMMANDER NAVFAC

ACTIVITY

SATISFACTORY TO DATE

DESIGNER XXX

DRAWN BY SPS

CHECKED BY

DESIGN MANAGER XXX

PROJECT MANAGER

FEAD/PM&E

FIRE PROTECTION X

DEPARTMENT OF THE NAVY
NAVAL FACILITIES ENGINEERING COMMAND
PUBLIC WORKS DEPARTMENT – MAINE
PORTSMOUTH NAVAL SHIPYARD

NAVAL FACILITIES ENGINEERING COMMAND ~ MID-ATLANTIC
NAVAL SHIPYARD – PORTSMOUTH, NH
KITTERY, MAINE

BUILDING 72 CENTRAL POWER PLANT
BASEMENT FLOOR MECHANICAL PLANS

B72 POWER PLANT – BASEMENT FLOOR MECHANICAL PLANS

EPROJECT NO.: 1364182

NAVFAC DRAWING NO. 12729934

SHEET 3 OF 4

M101 072-16-2242

DRAWFORM REVISION: 10 OCTOBER 2014

eProject: 1364182

Attachment (1)

Page 3 of 4

FILE NAME: P:\ME\Portsmouth Naval Shipyard\Buildings\2017_1364182_B72_Replace Compressed Air Dryers\B_Design\Drawings\Autocad Files\1364182_B72-Replace Compressed Air Dryers – Under Trim Compressors.dwg LAYOUT NAME: M-101 PLOTTED: Wednesday, July 13, 2016 – 6:49am USER: daniel.j.allen3

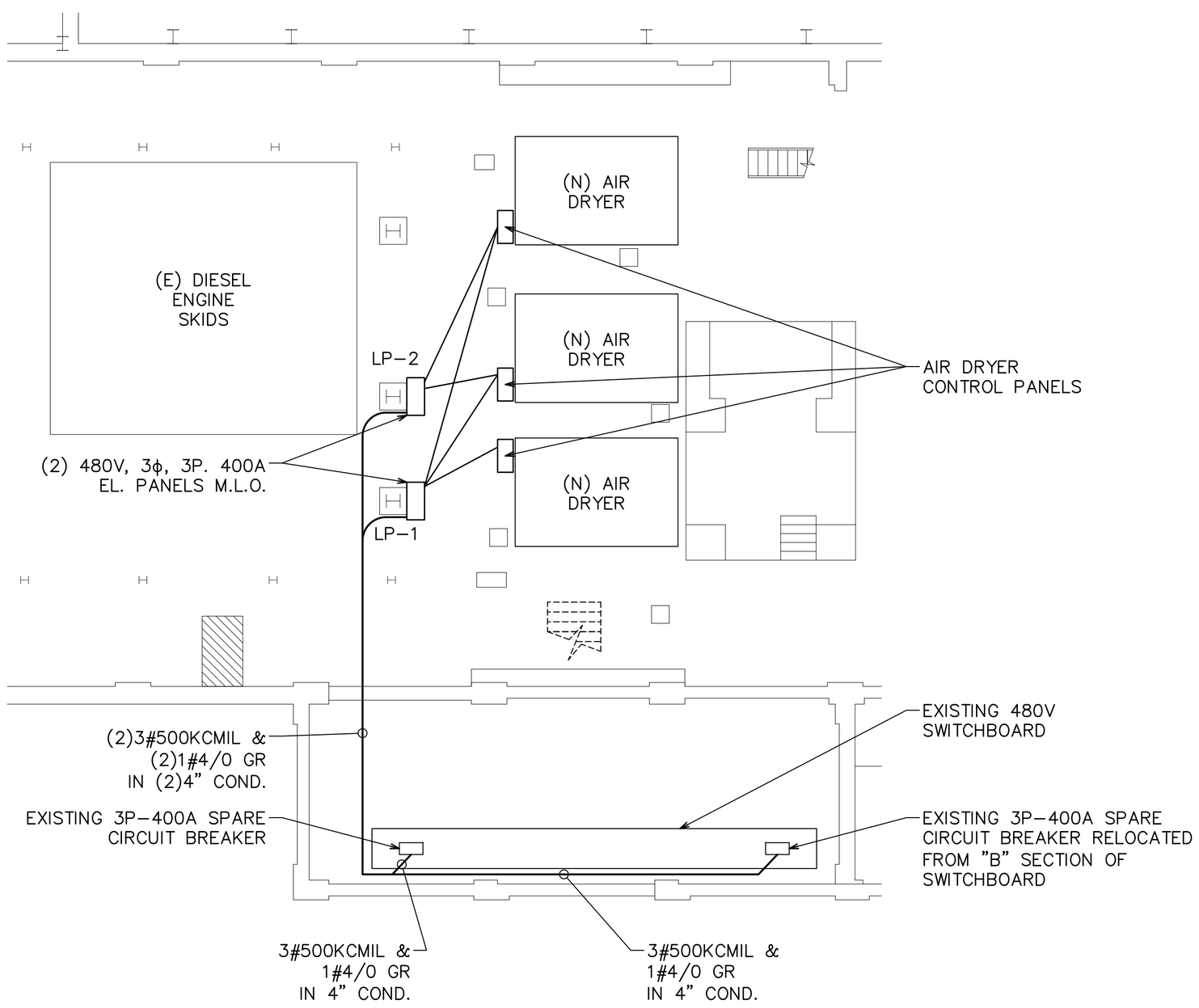

B72 POWER PLANT - BASEMENT FLOOR ELECTRICAL PLAN

SCALE 1/8"=1'

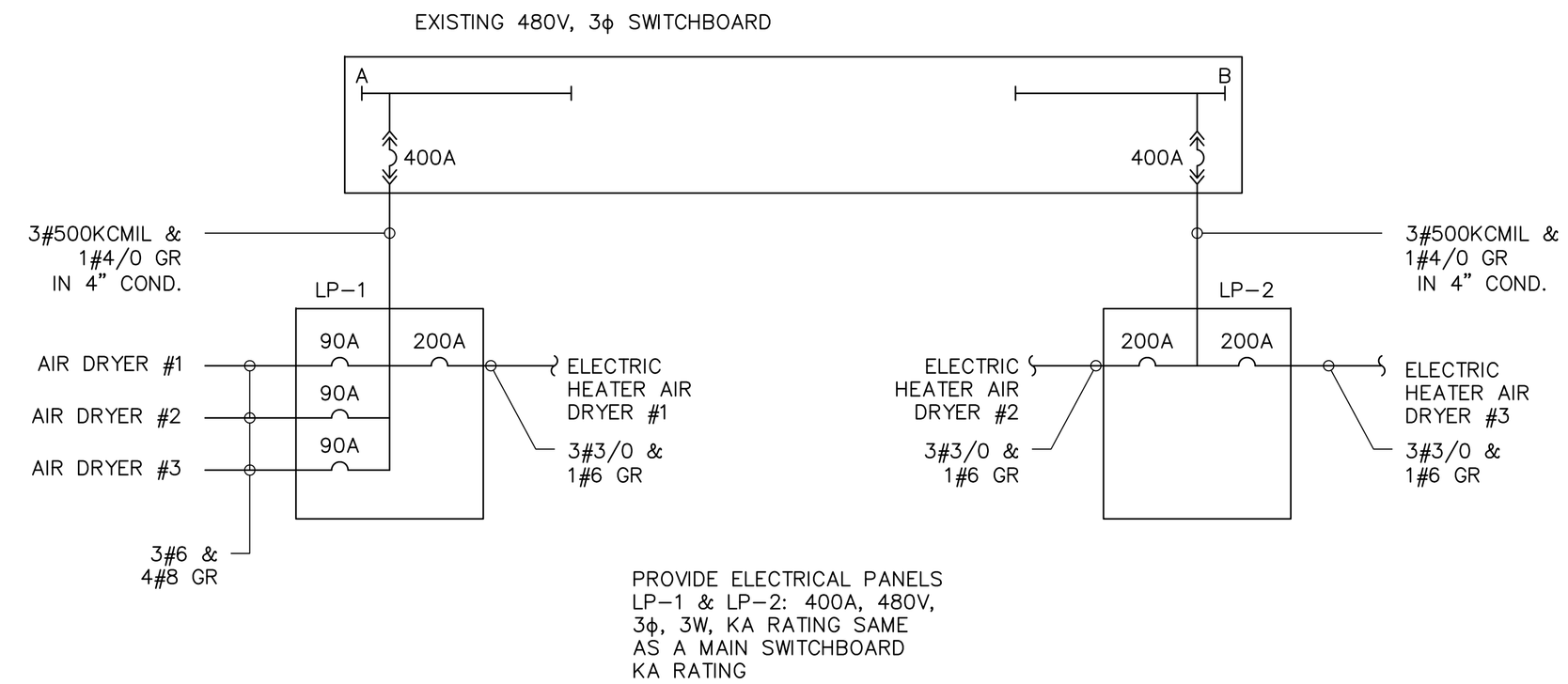

B72 POWER PLANT - ELECTRICAL RISER DIAGRAM

N.T.S.

GENERAL SHEET NOTES

1. COORDINATE 480V SWITCHBOARD OUTAGE WITH POWER PLANT OUTAGE SCHEDULE.
2. USE EXISTING SPARE 400A, 3 POLE CIRCUIT BREAKERS IN THE POWER PLANT 480V SWITCHGEAR.
3. FEED ELECTRICAL PANELS LP-1 & LP-2 FROM 400A CIRCUITS BREAKERS ABOVE, NOTE 2.
4. FEED AIR DRYERS AND ELECTRICAL HEATERS FROM LP-1 & LP-2.

GRAPHIC SCALE

1/8" = 1' 8 4 0 8 16 24 scale feet

CHECK GRAPHIC SCALE BEFORE USING

MARK	DATE	REVISIONS	PMS
DM	MM/DD/YYYY	NOISSIMBUS 2XX	0

NAVFAC

PRELIMINARY NOT FOR CONSTRUCTION

SEAL

PWD-MAINE IN HOUSE DESIGN

APPROVED

FOR COMMANDER NAVFAC

ACTIVITY

SATISFACTORY TO DATE

DESIGNER XXX

DRAWN BY SPS

CHECKED BY

DESIGN MANAGER XXX

PROJECT MANAGER

FEAD/PM&E

FIRE PROTECTION X

DEPARTMENT OF THE NAVY
NAVAL FACILITIES ENGINEERING COMMAND
PUBLIC WORKS DEPARTMENT – MAINE
PORTSMOUTH NAVAL SHIPYARD

NAVAL FACILITIES ENGINEERING COMMAND ~ MID-ATLANTIC
NAVAL SHIPYARD – PORTSMOUTH, NH
KITTERY, MAINE

BUILDING 72 CENTRAL POWER PLANT
BASEMENT FLOOR ELECTRICAL PLANS

B72 POWER PLANT – BASEMENT FLOOR ELECTRICAL PLAN AND ONE-LINE DIAGRAM

EPROJECT NO.: 1364182

NAVFAC DRAWING NO. 12729935

SHEET 4 OF 4

E101 072-16-2243

DRAWFORM REVISION: 10 OCTOBER 2014

eProject: 1364182

Attachment (1)

Page 4 of 4

FILE NAME: P:\ME\Portsmouth Naval Shipyard\Buildings\2017_1364182_B72_Replace Compressed Air Dryers\B_Design\Drawings\Autocad Files\1364182_B72-Replace Compressed Air Dryers - Under Trim Compressors.dwg LAYOUT NAME: E-101 PLOTTED: Wednesday, July 13, 2016 - 6:48am USER: daniel.j.allen3

SECTION 01 14 00.00 22

WORK RESTRICTIONS (PWD ME)
03/15

PART 1 GENERAL

1.1 REFERENCES

The publications listed below form a part of this specification to the extent referenced. The publications are referred to within the text by the basic designation only.

NATIONAL FIRE PROTECTION ASSOCIATION (NFPA)

NFPA 241	(2009) Standard for Safeguarding Construction, Alteration, and Demolition Operations

U.S. ARMY CORPS OF ENGINEERS (USACE)

EM 385-1-1	(2014) Safety and Health Requirements Manual

1.2 SUBMITTALS

Government approval is required for submittals with a "G" designation; submittals not having a "G" designation are for Contractor Quality Control approval. Submit the following in accordance with [Section 01 33 00 SUBMITTAL PROCEDURES] [for Design-Bid-Build projects] [Section 01 33 10.05 20 DESIGN SUBMITAL PROCEDURES and Section 01 33 00.05 20 CONSTRUCTION SUBMITTAL PROCEDURES] [for Design-Build projects]:

SD-01 Preconstruction Submittals

List of Contact Personnel; G

Vehicle List; G

1.3 SPECIAL SCHEDULING REQUIREMENTS (PNSY)

a. The facility will remain in operation during the entire construction period. The Contractor shall conduct his/her operations so as to cause the least possible interference with normal operations of the Portsmouth Naval Shipyard.

b. Permission to interrupt any Portsmouth Naval Shipyard roads, railroads, and/or utility services shall be submitted to the Contracting Officer in writing a minimum of 15 calendar days prior to the desired date of interruption.

e. Coordinate the work with the sequencing/phasing requirements outlined in Section 01 11 00 SUMMARY OF WORK.

1.4 CONTRACTOR ACCESS AND USE OF PREMISES (PNSY)

Deliveries to Portsmouth Naval Shipyard are limited to 13 foot widths. Notify the Contracting Officer 30 days in advance for any wide loads exceeding 13 feet. The Contractor shall contact the Contracting Officer to determine if there are other access limitations at the Portsmouth Naval Shipyard.

Ensure that Contractor personnel employed on the Portsmouth Naval Shipyard become familiar with and obey Portsmouth Naval Shipyard regulations. Keep within the limits of the work and avenues of ingress and egress. Do not enter restricted areas unless required to do so and until cleared for such entry.

All Contractors' equipment shall be conspicuously marked for identification.

1.5 CONTRACTOR ACCESS AND USE OF PREMISES (AOR)

Ensure that Contractor personnel employed on the Activity become familiar with and obey Activity regulations. Keep within the limits of the work and avenues of ingress and egress. Do not enter restricted areas unless required to do so and until cleared for such entry.

All Contractors' equipment shall be conspicuously marked for identification.

1.5.1 Subcontractors and Personnel Contacts

Furnish a list of contact personnel of the Contractor and subcontractors including addresses and telephone numbers for use in the event of an emergency. As changes occur and additional information becomes available, correct and change the information contained in previous lists.

1.5.2 Vehicle List

Submit an original list of vehicles to be utilized at the work site with the following information for each vehicle:

a. Make

b. Year

c. Model

d. License number

e. Registered owner

f. Current Base pass expiration date.

1.5.3 Identification Badges and Installation Access

a. Application for and use of badges will be as directed. Obtain access to the installation by participating in the Navy Commercial Access Control System (NCACS) or by obtaining passes each day from the Station's Pass and Identification/Security Office.

Costs for obtaining passes through the NCACS are the responsibility of the Contractor. One-day passes, issued through the Station's Pass and Identification Office, will be furnished without charge. Furnish a

completed EMPLOYMENT ELIGIBILITY VERIFICATION (DHS FORM I-9) form for all personnel requesting badges. This form is available at http://www.uscis.gov/portal/site/uscis by searching or selecting Employment Verification Form I-9. Report any instances of lost or stolen badges to the Contracting Officer immediately.

b. NCACS Program: NCACS is a voluntary program in which Contractor personnel who enroll, and are approved, are subsequently granted access to the installation for a period up to one year, or the length of the contract, whichever is less, and are not required to obtain a new pass from the Station Pass and Identification Office for each visit. The Government performs background screening and credentialing. Throughout the year the Contractor employee must continue to meet background screening standards. Periodic background screenings are conducted to verify continued NCACS participation and installation access privileges. Under the NCACS program, no commercial vehicle inspection is required, other than for Random Anti-Terrorism Measures (RAM) or in the case of an elevation of Force Protection Conditions (FPCON).

   Information on costs and requirements to participate and enroll in NCACS is available at:

   http://www.rapidgate.com/vendors/how-to-enroll

   Or by calling 1-877-727-4342. Contractors should be aware that the costs incurred to obtain NCACS credentials, or costs related to any means of access to a Navy Installation, are not reimbursable. Any time invested, or price(s) paid, for obtaining NCACS credentials will not be compensated in any way or approved as a direct cost of any contract with the Department of the Navy.

c. All Contractors who possess a Navy Commercial Access Control (NCAC) System Card are required to present a second form of valid ID to the Gate Sentry, if requested, upon arrival at the Installation's Entrance Gate.

   All Contractor personnel without CAC cards will need two forms of approved identification for access to the Installation.

   See Attachment A for the list of acceptable identification documents.

d. One-Day Passes: Participation in the NCACS is not mandatory, and if the Contractor chooses to not participate, the Contractor's personnel will have to obtain daily passes, be subject to daily mandatory vehicle inspection, and will have limited access to the installation. The Government will not be responsible for any cost or lost time associated with obtaining daily passes or added vehicle inspections incurred by non-participants in the NCACS.

1.6 STATION REGULATIONS

1.6.1 Radiological

1.6.1.1 Radiological Indoctrination (PNSY)

All Contractors working at the Portsmouth Naval Shipyard are required to view a 15 minute video briefing on radiological postings and controls in use at the Portsmouth Naval Shipyard. The briefing will be given at the Pass Office prior to issue of security badges and vehicle passes.

Any Contractor employee who disregards, alters, moves, or otherwise tampers with a radiological posting, or who disobeys a radiological instruction, may be removed from the Portsmouth Naval Shipyard and denied future access.

1.6.1.2 Yellow Materials (PNSY)

Contractors working at the Portsmouth Naval Shipyard shall not use yellow or orange-yellow colored materials for the following purposes: Protective clothing, hoods, sheeting, tarpaulins, polyethylene bottles or other containers, tapes, bags, banding, identification marks on tools, boundary markers, ribbons, vent ducts, temporary erosion control devices, survey ribbon, etc. The Contractor shall contact the Contracting Officer for a list of yellow items that have been approved for use on the Shipyard. Contractor generated yellow colored waste shall be disposed of by the Contractor off-yard. Shipyard refuse containers shall not be used for disposal of yellow colored waste materials. Yellow colored items such as described above are of special significance within the Shipyard and are subject to strict controls. Yellow colored contract generated debris shall be bagged in non-translucent containers, and promptly removed from Portsmouth Naval Shipyard.

1.6.1.3 Smoke Detectors (PNSY)

Ionization type smoke detectors and duct smoke detectors contain radioactive material and are prohibited from use on the Portsmouth Naval Shipyard. Photoelectric smoke detectors are the only type authorized for use on the Shipyard.

1.6.1.4 Radioactive Sources (PNSY)

All contracts involving radiation generating devices shall conform to the requirements listed in Section 01 35 26.00 22 GOVERNMENTAL SAFETY REQUIREMENTS (PWD ME) and U.S. Army Corps of Engineers Safety Manual EM 385-1-1. All requirements are to be submitted to the Contracting Officer at least 14 days prior to commencement of operations involving radiation generating devices. A requirements checklist will be provided by NAVFAC (COTs) Contractor Oversight Technician and also available on PWD Maine website:

https://www.navfac.navy.mil/navfac_worldwide/atlantic/fecs/mid-atlantic/pwd_maine/about_us/construction.html

1.6.2 Laser Control

Contractor shall comply with laser safety requirements under 21 CFR 1040 and ANSI 2136.1-1986 for any work under this contract utilizing lasers.

1.6.3 Energy Conservation

In cooperation with Government representatives, the Contractor shall participate in an active program directed toward the efficient use of energy. Government furnished utilities will not be provided for air conditioning of Contractor trailers or office areas.

1.6.4 Fire Prevention (PNSY)

Contractor shall familiarize and require all their employees to become familiar with fire prevention regulations within the Portsmouth Naval

Shipyard to include the proper method of turning in a fire alarm, storage of flammable and combustible materials and control of combustible waste and trash. Any HOT WORK (welding, burning, grinding, cutting, etc.) requires a HOT WORK PERMIT prior to commencing such work. This permit is obtained from the Portsmouth Naval Shipyard's Fire Department via the Contracting Officer.

1.6.5 Identification and Control of Seamed (Welded) Pipe and Tubing (PNSY)

Submarine Safety regulations prohibit the use of seamed (welded) pipe or tubing within the Portsmouth Naval Shipyard, unless such pipe or tubing is identified and controlled so as to prevent its inadvertent substitution for seamless pipe or tubing. The following requirements apply and will be strictly enforced:

Any seamed (welded) copper-nickel, carbon steel, carbon-moly steel, stainless steel, nickel-chromium-iron alloy, or nickel-copper pipe or tubing the Contractor intends to use on the Shipyard shall be identified in the following manner PRIOR TO DELIVERY TO THE SHIPYARD:

Use a lead-free white paint, to mark a 24-inch long stripe and the word "welded" alternately along the entire length of the pipe or tubing. Apply a one-half inch wide stripe unless the size of the pipe or tubing requires use of a narrower stripe.

Contractor shall maintain positive control over seamed pipe or tubing until worked into place or removed from the Shipyard.

Seamless pipe or tubing may be substituted for any seamed (welded) pipe or tubing specified in the technical specifications.

The above requirements do not apply to square or rectangular tubing, copper or brass pipe or tubing, they also do not apply to piping or tubing which has been incorporated into equipment or fixtures prior to delivery to the Shipyard.

1.6.6 Pesticide and Herbicide Control

Contractor shall not apply pesticides nor herbicides unless specifically required by this contract. Where application of pesticides or herbicides is required, provide the submittals required by the specification and obtain written approval prior to any application. Contracting Officer will require review and approval of pesticides or herbicides submittals.

1.6.7 Smoking Policy

In accordance with NAVFAC policy, smoking is prohibited inside all buildings and other facilities except those areas specifically identified as smoking areas (e.g., smoking shelters). Smoking is not permitted within 20 feet of air intakes, doorways or windows.

1.6.8 Portal Crane Clearance Zone (PNSY)

The Contractor shall ensure there is no construction debris or materials within the Crane Clearance Zone (i.e., between the painted yellow lines on each side of the rail) unless a rail outage has been approved.

1.7 WORKING HOURS (PNSY)

Regular working hours shall consist of a period established by the Contracting Officer between 7 AM and 3:30 PM, Monday through Friday, excluding Government holidays. The regular working hours shall be confirmed with the Contracting Officer.

1.7.1 Work Outside Regular Hours (PNSY)

Work outside regular working hours requires Contracting Officer approval. Provide written requests fifteen (15) Calendar days prior to such work to allow arrangements to be made by the Government for inspecting the work in progress and to allow scheduling of full time escorts in the building(s) if required. During periods of darkness, the different parts of the work shall be lighted in a manner approved by the Contracting Officer.

Contractors that utilize NCACs are responsible to coordinate for the correct access times with the Contracting Officer and the RAPID Gate Operations Center. If a contractors attempts access outside of their approved times, access to the Shipyard will be denied.

1.8 WORK IN OCCUPIED BUILDING(S)

Work under this contract may be located in an occupied building. Move unfixed furniture away from Contractor's working area as required to perform the work; protect; and replace in original locations upon completion of the work. Leave fixed equipment in place and protect against damage or temporarily disconnect, relocate, protect, and reinstall at completion of work. If determined necessary by the Contracting Officer, the Government will remove and relocate other Government property in the areas of the buildings scheduled to receive work. Allow 15 calendar days after written notification from the Contractor for the Government to relocate Government property.

1.9 UTILITY CUTOVERS AND INTERRUPTIONS

Make utility cutovers and interruptions after normal working hours or on Saturdays, Sundays, and Government holidays as approved by the Contracting Officer. Conform to procedures required in the paragraph "Work Outside Regular Hours." Anticipated costs shall be included in the bid.

Ensure that new utility lines are complete, except for the connection, before interrupting existing service.

Interruption to Water, Sanitary Sewer, Storm Sewer, Telephone Service, Electric Service, Air Conditioning, Heating, Fire Alarm, Compressed Air, and other utilities shall be considered utility cutovers pursuant to the paragraph entitled "Work Outside Regular Hours." This time limit includes time for deactivation and reactivation.

Operation of Station Utilities: The Contractor shall not operate nor disturb the setting of control devices in the Station's utilities system, including water, sewer, electrical, and steam services. The Government will operate the control devices as required for normal conduct of the work. The Contractor shall notify the Contracting Officer in writing within 15 calendar days when such operation is required.

1.10 WORK ADJACENT TO CIA SECURITY FENCING (PNSY)

Work adjacent to Portsmouth Naval Shipyard Controlled Industrial Area (CIA) fencing is strictly controlled to ensure security is maintained at all times.

Work which will breach CIA fencing is prohibited unless approval has been obtained from Head of Security Operations (Code 1720) and a Shipyard Police representative is at the worksite during the period that the fence has been breached.

A minimum of 30 calendar days prior to performing work which requires breaching the CIA security fence, arrange through the Contracting Officer to obtain Head of Security Operations approval and scheduling of the Shipyard Police representative. "Breaching the fence" is any repair, alteration, or other work which would allow access into the CIA either over, under, or through an opening in a CIA fence.

Conditions which breach the fence shall be eliminated during all non-work periods to the satisfaction of the Shipyard Police representative. Contractor shall not leave the worksite until such conditions are eliminated. All materials used to close openings in fencing and method of installation shall be the same type and construction as adjacent, undisturbed CIA fencing.

Except for temporary off-loading of materials, the 10-foot zone adjacent to CIA fencing shall remain clear of vehicles, materials, and equipment. Contractor personnel shall be at the site throughout the entire time of any off-loading.

1.11 WORK ADJACENT TO AN OVERHEAD CRANE

Provide a minimum vertical clearance of three (3) inches between the highest point of the crane and the lowest overhead obstruction. For buildings where truss sag becomes a factor, increase the clearance as necessary to maintain the minimum required clearance.

The horizontal clearance between the end of the crane and the building columns, knee braces or any other obstructions shall not be less than two (2) inches with the crane centered on the runway rails. Pipes, conduits, etc. shall not reduce this clearance.

The vertical clearance beneath a bridge crane is to be at least three (3) inches. This clearance is not applicable to the hook block unless it is in its up most position.

For work involving installation, adjustment, or replacement of rail fasteners (e.g. clips/bolts), the Contractor shall verify the existing crane envelope and clearance measurements around the rail head prior to beginning work. The Contractor shall notify the Government if the work will reduce the clearance between the bridge crane and rail fasteners and ensure newly installed items will not obstruct bridge crane travel.

The Contractor shall notify the Government to verify that crane clearance has been maintained when the work performed may have changed any physical dimensions of objects or structures adjacent to the crane (e.g., changing or servicing lighting fixtures/pendant assemblies, removal and reinstallation of pipes, conduits, junction boxes, etc.). If the crane is not available (e.g., undergoing maintenance, inspection, etc.), the

Contractor shall verify crane clearance by taking measurements using reference points (e.g., vertical and horizontal distance from the top of crane rail with respect to the crane envelope, vertical distance from the floor with respect to the crane envelope, etc.).

1.12 FIRE PROTECTION

1.12.1 Compliance (PNSY)

The Contractor shall comply with COE EM 385-1-1, NFPA 241, NAVSHIPYD PTSMH INST 11320.6 Fire Safety Manual (latest revision) and NAVSHIPYD PTSMH INST 11300.9 (Latest revision) for work at the Portsmouth Naval Shipyard, Utility and Facility Outages, and Portsmouth Naval Shipyard fire regulations. Obtain approval from the Portsmouth Naval Shipyard Fire Chief via the Contracting Officer prior to commencement of hot work operations.

1.12.2 Fired Kettles

Melt kettles for tar, asphalt, and similar materials shall not be closer than 25 feet to buildings or combustible materials. Provide a minimum of two 20 pound ABC all-purpose type extinguishers at the melting kettle and the area of hot material application. Equip kettles with proper heat controls and means of agitation to assure controlled uniform temperatures throughout contents to prevent spot heating. Do not heat contents above flash point.

1.12.3 Notification of Fire (PNSY)

Post the Portsmouth Naval Shipyard fire poster in conspicuous locations and at telephones in construction shacks.

1.13 SECURITY REQUIREMENTS

1.13.1 General

Contractor employees and representatives performing work under this contract are required to be United States citizens. If naturalized, the individual shall present his naturalization papers to the Security Officer for inspection. Foreign born personnel shall present evidence of citizenship regardless of citizenship of parents, as required by immigration laws.

1.13.2 Access to the Portsmouth Naval Shipyard (PNSY)

Contract Clause "FAR 52.204-2, Security Requirements and Alternate II" and the following apply:

Access to areas designated as "Red Badge" will require the Contractor to be escorted by a "Red Badged" Government Representative. The Contractor shall notify the Contracting Officer at least 14 Calendar Days in advance of the date access is required.

Obtain security badges and vehicle passes to enter the Portsmouth Naval Shipyard at the Portsmouth Naval Shipyard's Pass/Security Office. Contractor must furnish proof that employees are U.S. citizens to obtain badges to enter the Portsmouth Naval Shipyard.

Contractor must have a completed Department of Homeland Security Form I-9; Employment Eligibility Verification for each employee and furnish proof

that employees are U.S. citizens to obtain badges to enter Portsmouth Naval Shipyard.

1.13.3 Application and Issue of Security Badges

"Temporary" Security Badges will be issued to Contractor personnel requiring access for less than two (2) work days upon satisfactory proof of U.S. citizenship, in the form of an original or certified birth certificate, passport, or naturalization papers. A picture ID is required in addition to satisfactory proof of citizenship.

"Permanent" (photo) Standard Access Control Badges will be issued to Contractor personnel requiring access for two (2) or more work days. Contractor personnel will be required to complete an authorization application form for local record check, and a personal information sheet. The forms will be furnished to the Contractor following award of any contract resulting from this solicitation, at time of pre-performance or pre-construction conference.

In the event the Contractor requires access to contract work areas not permitted by the level of security badge issued, such need shall be demonstrated and an escort obtained. The escort shall remain visible to the Contractor at all times within areas requiring escort.

STANDARD ACCESS CONTROL BADGES SHALL BE ATTACHED TO THE OUTER GARMENT AND DISPLAYED AT ALL TIMES WHILE ON THE STATION.

CONTRACTOR PERSONNEL SHALL NOT ENTER AREAS FOR WHICH THEY HAVE NOT BEEN CLEARED. WHERE A NEED HAS BEEN DEMONSTRATED TO ENTER SUCH AREAS, CONTRACTOR SHALL BE UNDER CONSTANT ESCORT BY PERSONNEL WHO HAVE BEEN CLEARED. FAILURE TO ADHERE TO POSTED SECURITY REQUIREMENTS MAY RESULT IN REMOVAL OF THE EMPLOYEE FROM THE STATION WITH FUTURE ACCESS DENIED.

1.13.4 Application and Issue of Vehicle Passes (PNSY)

Vehicle passes will be issued upon satisfactory proof of a valid Operator's License, Vehicle Insurance, and State Vehicle Registration. Temporary passes will be issued for short term or single trip requirements on a case by case basis. All vehicles permitted to enter or park on the Portsmouth Naval Shipyard shall comply with the Portsmouth Naval Shipyard's traffic and parking regulations and shall only park in assigned areas, which may or may not be in the vicinity of the site of the contract work. No vehicle shall be parked in such a manner that crane tracks, railroad tracks, and vehicle access routes are blocked. Vehicles left unattended which are blocking such access routes are subject to towing and loss of vehicle passes. Parking on the Portsmouth Naval Shipyard may be in excess of one-half mile from the worksite.

1.13.5 Application and Issue of Vehicle Passes for Entry into Portsmouth Naval Shipyard's Controlled Industrial Areas (CIA)

Contractor vehicular access to the CIA will be minimized and all vehicles shall comply with the following requirements:

Vehicles must visibly display a CIA vehicle entry pass and inspection pass from the Commercial Vehicle Inspection Station (CVIS), Building 386. CIA passes will only be issued to company owned or leased vehicles, rental vehicles rented in the company name, or privately owned vehicles the company has certified in writing, to be necessary in the performance of

contracted work. A current license, registration, security badge, and decal number or temporary vehicle pass is required for a CIA vehicle entry pass. Contractor's company name must appear on the registration and on the vehicle. CIA passes will be issued on weekends and holidays at Building 29, from the Watch Supervisor. Contractors not possessing the level security badge required for CIA access must be accompanied by a properly badged escort to obtain the CIA vehicle pass.

Vehicles must clearly display an authorized company sign or logo, in the form of an exterior mounted magnetic signs or painted identifications on both sides of the vehicle. Paper or cardboard signs are not authorized.

Vehicles will only be allowed in the CIA for the transportation of Contractor's tools, parts, and materials to and from the worksite. An exception to this policy, Contractors may transport employees to and from the worksite if a specific security plan has been developed and approved by the Shipyard Security Officer.

Parking of privately-owned vehicles within the CIA is prohibited.

1.13.6 Application and Issue of Crane Passes (PNSY)

Comply with EM 385-1-1.

For Cranes Passes at the Portsmouth Naval Shipyard to be valid, the Certificate of Compliance must be stamped with a red, Code 700 Access Review Date and Signature Stamp displaying the current date.

1.13.7 Return of Badges and Vehicle Passes

Contractor shall ensure all vehicle access permits and personnel badges are returned to the Security Officer when the need has ended. Contractor shall account in writing for each missing pass or badge prior to final payment being made on the contract.

1.13.8 Contractor Security Responsibilities (PNSY)

Contractor employees shall not transport, drink, or have in their possession any alcoholic beverages. Possession of any controlled substances without a physician's prescription is also prohibited. Any Contractor employee appearing to be under the influence of intoxicating liquor or narcotics will be apprehended by Shipyard Police, escorted off of the Portsmouth Naval Shipyard, and turned over to the local Police Department.

Any vehicle found to contain controlled substances, including usable residue, may be seized and impounded. Within 24 hours of the work day following any vehicle seizure, the Portsmouth Naval Shipyard Police will have determined whether forfeiture of the vehicle is required. If not, the vehicle will be returned to the owner or authorized agent. If the vehicle is determined to be appropriate for forfeiture, the Portsmouth Naval Shipyard's Legal Officer will notify the Drug Enforcement Administration of such seizure and impoundment, for initiation of forfeiture proceedings pursuant to Title 21, U.S. Code, Section 881. Such actions may be taken regardless of whether the owner/operator of the vehicle had knowledge of the presence of drugs in the vehicle. The Government may pursue criminal or other disciplinary actions pursuant to Title 18, U.S. Code, Section 1382.

Possession of firearms, ammunition and/or explosives is prohibited. In the

event explosives are required for construction work, specific handling requirements and approvals shall be obtained from the Security Officer via the Contracting Officer.

Cameras, video equipment, or similar photographic equipment shall not be introduced into nor removed from the Portsmouth Naval Shipyard. In the event such equipment is required for performance of contract work, approvals shall be obtained from the Security Officer via the Contracting Officer.

Weapons (firearms, personal knives with blades 2-1/2 inch long or greater, Mace, Pepper Spray etc.) are not permitted aboard the Shipyard.

Cell phones equipped with cameras are permitted aboard the Portsmouth Naval Shipyard outside NAVSEA controlled spaces such as the CIA, but using them to take pictures is not allowed. Cameras, or cell phones equipped with cameras, are not allowed in the CIA or in any NAVSEA space such as an NWA, CNIA or Security Island.

Laptop computers shall not be introduced into nor removed from the Portsmouth Naval Shipyard. If laptop computers are required to perform work, obtain approvals from the Security Officer via the Contracting Officer.

Driver use of a hand-held cellular phone in a moving vehicle on the Portsmouth Naval Shipyard is prohibited. This prohibition does not include hands-free cellular phone devices. Hands-free devices include console/dash-mounted or otherwise secured cellular phones with integrated features such as voice-activation, speed dial, speakerphone or other similar technology for sending and receiving calls.

Driver use of any portable, personal listening device worn inside the aural canal, around or covering the driver's ear while operating a motor vehicle, is prohibited. Listening devices include wired or wireless earphones and headphones (including blue tooth or similar technology), and do not include hearing aids or devices designed and required for hearing protection.

The use of radar or laser detection devices to indicate the presence of speed recording instruments or to transmit simulated erroneous speeds is prohibited in accordance with OPNAVINST 5100.2H.

The Contractor shall indoctrinate personnel on access limitations to ensure security control is maintained as an integral part of their work pattern and habit.

Contractor shall indoctrinate his/her personnel on escorting procedures and responsibilities. Contractor personnel acting as escorts for other Contractor personnel assume full responsibility for their actions. Escorts shall be within sight of the persons being escorted at all times.

Contractor is advised that any unescorted personnel found in security areas requiring a higher level clearance than the level represented by the badge displayed will be removed from the area with possible confiscation of security badges and vehicle passes.

1.14 MARINE ACTIVITIES (PNSY)

a. The Contractor shall coordinate all marine vessel movements with the Contracting Officer's Representative and the Shipyard's Port Operations

Department. The Contractor shall submit a weekly updated schedule showing proposed docking locations and vessel movements to the Contracting Officer's Representative. The Contractor shall meet with the Contracting Officer Representative and Shipyard Port Operations Representative weekly to review the vessel schedule.

b. Any Contractor waterborne craft or vessel movements which will be adjacent to any naval vessels shall be made under the direction of the Shipyard's Pilot. The Contractor shall notify the Contracting Officer's Representative at least 14 calendar days in advance of any movements that will require the Shipyard Pilot.

c. All Contractor waterborne craft shall at all times maintain a minimum of ten (10) feet clearance to any Government Barge in the vicinity of the work. This applies to subcontractors and materials suppliers as well as to the prime Contractor. This minimum clearance shall also take into account any materials or equipment present on the Contractor craft that could reduce this effective clearance distance. This restriction is in effect at all times 24/7 including overnight hours and weekends.

d. All marine activities shall be completed to a manner that ensures the stability of caissons, piers, berths, bulkheads, fender systems, mooring hardware and other structures adjacent to the work site. The Contractor shall repair any damage caused by the Contractors operations or vessels.

e. When not in use, the Contractor vessels shall be tied up at a location approved by the contracting Officer's Representative and the Shipyard's Port Operations Department.

f. Any waterborne craft which is deemed to be unsafe by the Contracting Officer's Representative shall be prohibited from working at the Shipyard. Copies of all inspections and certificates shall be submitted to the Contracting Officer's Representative for approval prior to bringing any vessel to the Shipyard.

1.15 CONSTRUCTION VEHICLES

The Contractor shall not utilize any vehicle that will exceed an HS20 wheel load. The use of "off road" vehicles which cannot be legally operated on State roadways or highways is prohibited.

PART 2 PRODUCTS

Not used.

PART 3 EXECUTION

Not used.

-- End of Section --

SECTION 01 20 00.00 20

PRICE AND PAYMENT PROCEDURES (PWD ME) [DESIGN-BID-BUILD PROJECTS]
03/15

PART 1 GENERAL

1.1 REFERENCES

The publications listed below form a part of this specification to the extent referenced. The publications are referred to within the text by the basic designation only.

U.S. ARMY CORPS OF ENGINEERS (USACE)

EP-1110-1-8	(2009) Construction Equipment Ownership and Operating Expense Schedule

1.2 SUBMITTALS

Government approval is required for submittals with a "G" designation; submittals not having a "G" designation are for Contractor Quality Control approval. Submit the following in accordance with Section 01 33 00 SUBMITTAL PROCEDURES:

SD-01 Preconstruction Submittals

Schedule of Prices; G

1.3 SCHEDULE OF PRICES

1.3.1 Data Required

Within 15 calendar days of notice of award, prepare and deliver to the Contracting Officer a Schedule of Prices (construction contract) as directed by the Contracting Officer. Provide a detailed breakdown of the contract price, giving quantities for each of the various kinds of work, unit prices, and extended prices. Provide labor, material, equipment for each line item. Costs shall be summarized and totals provided for each construction category.

1.3.2 Schedule Instructions

Payments will not be made until the Schedule of Prices has been submitted to and accepted by the Contracting Officer. Identify the cost for site work, and include incidental work to the 5 ft. line. Identify costs for the building(s), and include work out to the 5 ft. line. Work out to the 5 ft. line shall include construction encompassed within a theoretical line 5 ft. from the face of exterior walls and shall include attendant construction, such as pad mounted HVAC cooling equipment, cooling towers, and transformers placed beyond the 5 ft. line.

1.3.3 Real Property Assets

The Government will provide the Draft DD Form 1354, Transfer and Acceptance of Military Real Property filled in with the appropriate Real Property

Unique Identifiers (RPUID) and related construction Category Codes to summarize the designed real property assets that apply to this contract. The Contractor shall meet with the Contracting Officer and the Real Property Accounting Officer during the Pre-Construction Meeting and the Project Closeout Meetings to modify and include any necessary changes to the DD Form 1354. The Contractor shall provide the Interim DD Form 1354 that uses the appropriate division of the RPUIDs/Category Codes to represent the final constructed facility and include all associated cost. Coordinate the Contractor's Price and Payment structure with the structure of the RPUIDs/Category Codes.

Divide detailed asset breakdown into the RPUIDs and related construction Category Codes and populate associated costs which represent all aspects of the work. Where assets diverge into multiple RPUID/Category Codes, divide the asset and provide the proportion of the assets in each RPUID/Category Code. Assets and related RPUID/Category Codes may be modified by the Contracting Officer as necessary during course of the work. Coordinate identification and proportion of these assets with the Government Real Property Accounting Officer.

Cost data accumulated under this section are required in the preparation of DD Form 1354.

1.4 CONTRACT MODIFICATIONS

In conjunction with the Contract Clause "DFARS 252.236-7000, Modification Proposals-Price Breakdown," and where actual ownership and operating costs of construction equipment cannot be determined from Contractor accounting records, equipment use rates shall be based upon the applicable provisions of the EP-1110-1-8.

1.5 CONTRACTOR'S INVOICE AND CONTRACT PERFORMANCE STATEMENT

1.5.1 Content of Invoice

Requests for payment will be processed in accordance with the Contract Clause FAR 52.232-27, Prompt Payment Construction Contracts and FAR 52.232-5, Payments Under Fixed-Price Construction Contracts. The requests for payment shall include the documents listed below.

a. The Contractor's invoice, on NAVFAC Form 7300/30 furnished by the Government, showing in summary form, the basis for arriving at the amount of the invoice. Form 7300/30 shall include certification by Quality Control (QC) Manager as required by the contract.

b. The Estimate for Voucher/ Contract Performance Statement on NAVFAC Form 7300/31 furnished by the Government, showing in detail: the estimated cost, percentage of completion, and value of completed performance for each of the construction categories stated in this contract. Use NAVFAC LANT Form 4-330/110 (New 7/84) on NAVFAC LANT contracts when a Monthly Estimate for Voucher is required.

c. Updated Project Schedule and reports required by the contract.

d. Contractor Safety Self Evaluation Checklist.

e. Other supporting documents as requested.

f. Updated copy of submittal register.

g. Invoices not completed in accordance with contract requirements will be returned to the Contractor for correction of the deficiencies.

h. Contractor's Monthly Estimate for Voucher (NAVFAC LANT Form 4-330/110 (New 7/84)) with Subcontractor and supplier payment certification.

i. Affidavit to accompany invoice (NAVFAC LANT NORVA Form 4-4235/4 (Rev.5/81)).

j. Materials on Site.

k. Monthly Work-hour report.

l. Solid Waste Disposal Report.

1.5.2 Submission of Invoices

If NFAS Clause 5252.232-9301 is included in the contract, the documents listed in paragraph "CONTENT OF INVOICE" shall be provided in their entirety as attachments in Wide Area Work Flow (WAWF) for each invoice submitted. The maximum size of each WAWF attachment is two megabytes, but there are no limits on the number of attachments. If a document cannot be attached in WAWF due to system or size restriction it shall be provided as instructed by the Contracting Officer.

Monthly invoices and supporting forms for work performed through the anniversary award date of the contract shall be submitted to the Contracting Officer within 5 calendar days of the date of invoice. For example, contract award date is the 7th of the month, the date of each monthly invoice shall be the 7th and the invoice shall be submitted by the 12th of the month.

1.5.3 Final Invoice

a. A final invoice shall be accompanied by the Contractor's Final Release. If the Contractor is incorporated, the Final Release shall contain the corporate seal. An officer of the corporation shall sign and the corporate secretary shall certify the Final Release.

b. For final invoices being submitted via WAWF, the original Contractor's Final Release Form must be provided directly to the respective Contracting Officer prior to submission of the final invoice. Once receipt of the original Final Release Form has been confirmed by the Contracting Officer, the Contractor shall then submit final invoice and attach a copy of the Final Release Form in WAWF.

c. Final invoices not accompanied by the Contractor's Final Release will be considered incomplete and will be returned to the Contractor.

1.6 PAYMENTS TO THE CONTRACTOR

Payments will be made on submission of itemized requests by the Contractor which comply with the requirements of this section, and will be subject to reduction for overpayments or increase for underpayments made on previous payments to the Contractor.

1.6.1 Obligation of Government Payments

The obligation of the Government to make payments required under the provisions of this contract will, at the discretion of the Contracting Officer, be subject to reductions and/or suspensions permitted under the FAR and agency regulations including the following in accordance with "FAR 32.503-6:

a. Reasonable deductions due to defects in material or workmanship;

b. Claims which the Government may have against the Contractor under or in connection with this contract;

c. Unless otherwise adjusted, repayment to the Government upon demand for overpayments made to the Contractor; and

d. Failure to provide up to date record drawings not current as stated in Contract Clause "FAC 5252.236-9310, Record Drawings."

1.6.2 Payment for Onsite and Offsite Materials

Progress payments may be made to the contractor for materials delivered on the site, for materials stored off construction sites, or materials that are in transit to the construction sites under the following conditions:

a. FAR 52.232-5(b) Payments Under Fixed Price Construction Contracts.

b. Materials delivered on the site but not installed, including completed preparatory work, and off-site materials to be considered for progress payment shall be major high cost, long lead, special order, or specialty items, not susceptible to deterioration or physical damage in storage or in transit to the construction site. Examples of materials acceptable for payment consideration include, but are not limited to, structural steel, non-magnetic steel, non-magnetic aggregate, equipment, machinery, large pipe and fittings, precast/pre-stressed concrete products, plastic lumber (e.g., fender piles/curbs), and high-voltage electrical cable. Materials not acceptable for payment include consumable materials such as nails, fasteners, conduits; gypsum board, glass, insulation, and wall coverings.

c. Materials to be considered for progress payment prior to installation shall be specifically and separately identified in the Contractor's estimates of work submitted for the Contracting Officer's approval in accordance with Schedule of Prices requirement of this contract. Requests for progress payment consideration for such items shall be supported by documents establishing their value and that the title requirements of the clause at FAR 52.232-5 have been met.

d. Materials are adequately insured and protected from theft and exposure.

e. Provide a written consent from the surety company with each payment request for offsite materials.

PART 2 PRODUCTS

Not used.

PART 3 EXECUTION

Not used.

-- End of Section --

SECTION 01 30 00

ADMINISTRATIVE REQUIREMENTS (PWD ME)
07/15

PART 1 GENERAL

1.1 REFERENCES

The publications listed below form a part of this specification to the extent referenced. The publications are referred to within the text by the basic designation only.

U.S. ARMY CORPS OF ENGINEERS (USACE)

EM 385-1-1 (2014) Safety and Health Requirements Manual

1.2 SUBMITTALS

Government approval is required for submittals with a "G" designation; submittals not having a "G" designation are for Contractor Quality Control approval. Submit the following in accordance with Section 01 33 00 SUBMITTAL PROCEDURES :

SD-01 Preconstruction Submittals

Insurance; G

(This is covered in 01 14 00.00 22)

Progress and completion pictures; G

NAVFAC PWD ME Follow-on Services List; G

1.3 PROGRESS AND COMPLETION PICTURES

Photographically document site conditions prior to start of construction operations. Provide monthly, and within one month of the completion of work, showing the sequence and progress of work. Take a minimum of 20 digital photographs each week throughout the entire project from a minimum of ten views from points located by the Contracting Officer. Submit a view location sketch indicating points of view. Submit with the monthly invoice two sets of digital photographs each set on a separate CD-R, cumulative of all photos to date. Indicate photographs demonstrating environmental procedures. Photographs for each month shall be in a separate monthly directory and each file shall be named to indicate its location on the view location sketch. The view location sketch shall also be provided on the CD as digital file. All file names shall include a date designator. Cross reference submittals in the appropriate daily report. Photographs shall be provided for unrestricted use by the Government.

1.4 MINIMUM INSURANCE REQUIREMENTS

Procure and maintain during the entire period of performance under this contract the following minimum insurance coverage:

a. Comprehensive general liability: $500,000 per occurrence.

b. Automobile liability: $200,000 per person, $500,000 per occurrence for bodily injury, $20,000 per occurrence for property damage.

c. Workmen's compensation as required by Federal and State workers' compensation and occupational disease laws.

d. Employer's liability coverage of $100,000, except in States where workers compensation may not be written by private carriers.

e. Others as required by State Law.

1.5 CONTRACTOR PERSONNEL REQUIREMENTS

1.5.1 Contractor Personnel Requirements

In case of conflict with other specification provisions, the requirements of this paragraph take precedence.

The following personnel shall be on site whenever work is being performed:

Project Superintendent
Site Safety and Health Officer (SSHO)
Quality Control Manager (QC Manager)

The following personnel need only be on site as their specified duties require:

Project Manager
Commissioning Authority, if included in the contract.

1.5.2 Subcontractor Special Requirements

1.5.2.1 Qualified Testing Organization

All contract requirements of work required to be performed by a Qualified Testing Organization shall be accomplished directly by a first tier subcontractor. No work to be performed by a Qualified Testing Organization shall be accomplished by a second tier subcontractor.

1.5.3 Contractor Personnel Requirements

Failure to obtain entry approval or security badging will not affect the contract price or time of completion.

1.6 SUPERVISION

Provide at least one (1) qualified Project Manager and one (1) on-site Project Superintendent per project capable of reading, writing, and conversing fluently in English to supervise the work at all times work is being performed. The Project Manager must have a minimum 10 years' experience as a Project Manager or Superintendent on projects like this contract or similar in size and complexity. The Project Superintendent must have a minimum of 10 years' experience as a Superintendent on projects similar in size and complexity.

The Project Superintendent shall be on site during working hours. The

Superintendent **cannot** be the Quality Control Manager nor the Site Safety and Health Officer (SSHO).

In addition to the above experience requirements, the Project Manager and on-site Project Superintendent shall complete the course entitled "Construction Quality Management for Contractors" prior to the start of construction.

The Project Manager in this context shall mean the individual with the responsibility for the overall management of the project and the Project Superintendent shall mean the individual with the responsibility for quality and production. Both the Project Manager and Project Superintendent are subject to removal by the Contracting Officer for non-compliance with requirements specified in the contract and for failure to manage the project to insure timely completion. Furthermore, the Contracting Officer may issue an order stopping all or part of the work until satisfactory corrective action has been taken. No part of the time lost due to such stop orders shall be made the subject of claim for extension of time for excess costs or damages by the Contractor.

Approval of Project Manager and on-site Project Superintendent by the Contracting Officer is required prior to start of construction. Provide resumes for the proposed Project Manager and on-site Project Superintendent describing their experience with references and qualifications to the Contracting Officer for approval. The Contracting Officer reserves the right to interview the proposed Project Manager and on-site Project Superintendent at any time in order to verify the submitted qualifications.

1.7 QUALITY CONTROL PERSONNEL:

1.7.1 QC and Alternative QC Manager Qualifications

a. Complete the course entitled "Construction Quality Management (CQM) for Contractors" and shall maintain a current certificate.

b. Ten (10) years of combined experience as a Superintendent, QC Manager, Project Manager, or Project Engineer, and at least two years' experience as a QC Manager on similar size and type construction contracts.

c. Familiar with requirements of USACE EM 385-1-1, and experience in the areas of hazard identification and safety compliance.

1.8 PRECONSTRUCTION CONFERENCE

After award of the contract but prior to commencement of any work at the site, meet with the Contracting Officer to discuss and develop a mutual understanding relative to the administration of the value engineering and safety program, preparation of the Schedule of Prices, shop drawings, coordination drawings, and other submittals, scheduling programming, prosecution of the work, and clear expectations of the "Interim DD Form 1354" Submittal. Major subcontractors who will engage in the work shall also attend.

1.9 FACILITY TURNOVER PLANNING MEETINGS (NAVFAC Red Zone - NRZ)

Key personnel will meet to identify strategies to ensure the project is carried to expeditious closure and turnover to the Client. Start the turnover process at the Pre Construction Conference meeting and convene at

the Facility Turnover Meetings once the project has reached approximately 75 percent completion or three to six months prior to Beneficial Occupancy Date (BOD), whichever comes first. The Contracting Officer's Representative will lead the meetings and guide discussions based on an agenda provided by the Government. The facility Turnover effort shall include the following:

a. Pre-Construction Meeting - Contracting Officer's Technical Representative (COTR) will provide the NRZ Checklist and the Contractor, Client, and NAVFAC Representatives will compare Contractor's schedule to NRZ Checklist items.

b. Facility Turnover Meetings

1. Fill in the NRZ Checklist including Contractor, Client, and NAVFAC Checklist Items and assign a person responsible for each item and a due date. The Contractor's Representative will facilitate the assignment of responsibilities, fill out the NRZ Checklist, and discuss "Interim DD From 1354" requirements.

2. Review the Contractor's updated schedule. The Contractor shall develop a Plan of Action and Milestones (POAM) for the completion of all Contractor, Client, and NAVFAC Checklist items. Submit the NAVFAC Red Zone Checklist/POAM to the Contracting Officer.

3. Confirm that all NRZ Checklist items will be completed on time for the scheduled Facility Turnover.

4. The Contractor shall prepare the NAVFAC Red Zone Project Facility System & Equipment List included in Appendix A of this Section. The List shall include all facility systems and equipment provided as part of the project which will require future maintenance, inspections or certifications. The Contractor shall submit a preliminary list of items with the COTR at the initial Facility Turnover Meeting. The Contractor shall provide the final completed Project Facility System & Equipment List with all information required facility system/equipment information to the COTR at least sixty (60) calendar days prior to the project BOD. Prepare and submit the NAVFAC PWD ME Follow-On Services List.

   See Appendix A of this Section for the Facility Turnover Planning Meeting Agenda, NRZ Checklist & POAM and the NAVFAC Red Zone Project Facility System & Equipment List.

1.10 CLEANUP

Leave premises "broom clean." Clean interior and exterior glass surfaces exposed to view; remove temporary labels, stains and foreign substances; polish transparent and glossy surfaces; vacuum carpeted and soft surfaces. Clean equipment and fixtures to a sanitary condition. Replace filters of operating equipment. Clean debris from roofs, gutters, catch basins, manholes, downspouts and drainage systems. Sweep paved areas and rake clean landscaped areas. Remove waste and surplus materials, rubbish and construction facilities from the site.

1.11 PARTNERING

To most effectively accomplish this contract, the Government requires the formation of a cohesive partnership within the Project Team whose members

are from the Government, the Contractor and their Subcontractors. Key personnel from the Supported Command, the End User (who will occupy the facility), NAVFAC PWD ME Representatives, the Navy Region/Installation, the Contractor and Subcontractors, and the Designer of Record will be invited to participate in the Partnering process. The Partnership will draw on the strength of each organization in an effort to achieve a project that is without any safety mishaps, conforms to the Contract, and stays within budget and on schedule.

The Contracting Officer will provide Information on the Partnering Process and a list of key and optional personnel who should attend the Partnering meeting.

1.11.1 Informal Partnering

The Contracting Officer will organize the Partnering Sessions with key personnel of the project team, including Contractor personnel and Government personnel.

The Initial Partnering session should be a part of the Pre-Construction Meeting. Partnering sessions will be held at a location agreed to by the Contracting Officer and the Contractor (typically a conference room provided by the PWD ME FEAD office or the Contractor).

The Initial Informal Partnering Session will be conducted and facilitated using electronic media provided by the Contracting Officer.

The Partners will determine the frequency of the follow-on sessions.

1.12 AVAILABILITY OF CADD DRAWING FILES

After award and upon request, the electronic "Computer-Aided Drafting and Design (CADD)" drawing files included in the RFP will only be made available to the Contractor for use in preparation of construction data related to the referenced contract subject to the following terms and conditions.

Data contained on these electronic files shall not be used for any purpose other than as a convenience in the preparation of construction data for the referenced project. Any other use or reuse shall be at the sole risk of the Contractor and without liability or legal exposure to the Government. The Contractor shall make no claim and waives to the fullest extent permitted by law, any claim or cause of action of any nature against the Government, its agents or sub consultants that may arise out of or in connection with the use of these electronic files. The Contractor shall, to the fullest extent permitted by law, indemnify and hold the Government harmless against all damages, liabilities or costs, including reasonable attorney's fees and defense costs, arising out of or resulting from the use of these electronic files.

These electronic CADD drawing files are not construction documents. Differences may exist between the CADD files and the corresponding construction documents. The Government makes no representation regarding the accuracy or completeness of the electronic CADD files, nor does it make representation to the compatibility of these files with the Contractors hardware or software. In the event that a conflict arises between the signed and sealed construction documents prepared by the Government and the furnished CADD files, the signed and sealed construction documents shall govern. The Contractor is responsible for determining if any conflict

exists. Use of these CADD files does not relieve the Contractor of duty to fully comply with the contract documents, including and without limitation, the need to check, confirm and coordinate the work of all contractors for the project.

If the Contractor uses, duplicates and/or modifies these electronic CADD files for use in producing construction drawings and data related to this contract, all previous indicia of ownership (seals, logos, signatures, initials and dates) shall be removed.

1.13 ELECTRONIC MAIL (E-MAIL) ADDRESS

The Contractor shall establish and maintain electronic mail (e-mail) capability along with the capability to open various electronic attachments in Microsoft, Adobe Acrobat, and other similar formats. Within 10 days after contract award, the Contractor shall provide the Contracting Officer a single (only one) e-mail address for electronic communications from the Contracting Officer related to this contract including, but not limited to, contract documents, invoice information, request for proposals, and other correspondence. The Contracting Officer may also use email to notify the Contractor of base access conditions when emergency conditions warrant, such as hurricanes, terrorist threats, etc. Multiple email address will not be allowed.

It is the Contractor's responsibility to make timely distribution of all Contracting Officer initiated e-mail with its own organization including field office(s). The Contractor shall promptly notify the Contracting Officer, in writing, of any changes to this email address.

PART 2 PRODUCTS

Not used.

PART 3 EXECUTIONS

Not used.

-- End of Section --

SECTION 01 32 16.00 20

SMALL PROJECT CONSTRUCTION PROGRESS SCHEDULES
02/15

PART 1 GENERAL

1.1 SUBMITTALS

Government approval is required for submittals with a "G" designation; submittals not having a "G" designation are for Contractor Quality Control approval. Submit the following in accordance with Section 01 33 00 SUBMITTAL PROCEDURES:

SD-01 Preconstruction Submittals

Construction Schedule; G

SD-07 Certificates

Monthly Updates

1.2 ACCEPTANCE

Prior to the start of work, prepare and submit to the Contracting Officer for acceptance a construction schedule in the form of a Bar Chart Schedule in accordance with the terms in Contract Clause "FAR 52.236-15, Schedules for Construction Contracts," except as modified in this contract.

The acceptance of a Baseline Construction Schedule is a condition precedent to:

a. The Contractor starting work on the demolition or construction stage(s) of the contract.

b. Processing Contractor's invoice(s) for construction activities/items of work.

c. Review of any schedule updates.

Submittal of the Baseline Schedule, and subsequent schedule updates, is understood to be the Contractor's certification that the submitted schedule meets all of the requirements of the Contract Documents, represents the Contractor's plan on how the work will be accomplished, and accurately reflects the work that has been accomplished and how it was sequenced (as-built logic).

1.3 SCHEDULE FORMAT

1.3.1 Bar Chart Schedule

The Bar Chart must, as a minimum, show work activities, submittals, Government review periods, material/equipment delivery, utility outages, on-site construction, inspection, testing, and closeout activities. The Bar Chart must be time scaled and generated using an electronic spreadsheet program.

1.3.2 Schedule Submittals and Procedures

Submit Bar Chart Schedules and updates in hard copy and on electronic media that is acceptable to the Contracting Officer. Submit an electronic back-up of the project schedule in an import format compatible with the Government's scheduling program.

1.4 SCHEDULE MONTHLY UPDATES

Update the Construction Schedule at monthly intervals or when the schedule has been revised. The updated schedule must be kept current, reflecting actual activity progress and plan for completing the remaining work. Submit copies of purchase orders and confirmation of delivery dates as directed by the Contracting Officer.

a. Narrative Report: Provide with schedule updates. Identify and justify;

(1) Progress made in each area of the project

(2) Critical Path

(3) Date/time constraint(s), other than those required by the contract

(4) Changes in the following; added or deleted activities, original and remaining durations for activities that have not started, logic, milestones, planned sequence of operations, and critical path

(5) Status of Contract Completion Date and interim milestones;

(6) Current and anticipated delays (describe cause of delay and corrective actions(s) and mitigation measures to minimize);

(7) Description of current and future schedule problem areas.

Each entry in the narrative report must cite the respective Activity ID and Activity Description, the date and reason for the change, and description of the change.

1.5 CONTRACT MODIFICATION

Submit a Time Impact Analysis (TIA) with each cost and time proposal for a proposed change. TIA must illustrate the influence of each change or delay on the Contract Completion Date or milestones. No time extensions will be granted nor delay damages paid unless a delay occurs which consumes all available Project Float, and extends the Projected Finish beyond the Contract Completion Date.

a. Each TIA must be in both narrative and schedule form. The narrative must define the scope and conditions of the change; provide start and finish dates of impact, successor and predecessor activity to impact period, responsible party, describe how it originated, and how it impacts the schedule. The schedule submission must consist of three native files:

(1) Fragnet used to define the scope of the changed condition

(2) Most recent accepted schedule update as of the time of the proposal or claim submission that has been updated to show all

activity progress as of the time of the impact start date.

(3) The impacted schedule that has the fragnet inserted in the updated schedule and the schedule "run" so that the new completion date is determined.

b. For claimed as-built project delay, the inserted fragnet TIA method must be modified to account for as-built events known to occur after the data date of schedule update used.

c. All TIAs must include any mitigation, and must determine the apportionment of the overall delay assignable to each individual delay. The associated narrative must clearly describe the findings in a chronological listing beginning with the earliest delay event.

(1) Identify types of delays as follows:

(a) Excusable Delay: Force-Majeure (e.g. weather) - Contractor may receive time extension, but time will not be compensable.

(b) Inexcusable Delay: Contractor Responsibility - Contractor will not receive time extension.

(c) Compensable Delay: Government Responsibility - Contractor may receive compensable time extension.

(2) If a combination of delay types occurs, it is considered Concurrent Delay, which is defined in the following combinations:

(a) Excusable Delay and Compensable Delay results in Excusable Delay

(b) Excusable Delay and Inexcusable Delay results in Inexcusable Delay

(c) Compensable Delay and Inexcusable Delay results in Excusable Delay

d. Submit Data disks containing the narrative and native schedule files.

e. Unless the Contracting Officer requests otherwise, only add conformed contract modifications into the Project NAS.

1.6 3-WEEK LOOK AHEAD SCHEDULE

Prepare and issue a 3-Week Look Ahead schedule to provide a more detailed day-to-day plan of upcoming work identified on the Construction Schedule. Key the work plans to activity numbers when a NAS is required and update each week to show the planned work for the current and following two-week period. Additionally, include upcoming outages, closures, preparatory meetings, and initial meetings. Identify critical path activities on the Three-Week Look Ahead Schedule. The detail work plans are to be bar chart type schedules, maintained separately from the Construction Schedule on an electronic spreadsheet program and printed on 8-1/2 by 11 inch sheets as directed by the Contracting Officer. Activities must not exceed 5 working days in duration and have sufficient level of detail to assign crews, tools and equipment required to complete the work. Deliver three hard copies and one electronic file of the 3-Week Look Ahead Schedule to the Contracting Officer no later than 8 a.m. each Monday, and review during the weekly CQC

Coordination or Production Meeting.

1.7 CORRESPONDENCE AND TEST REPORTS:

All correspondence (e.g., letters, Requests for Information (RFIs), e-mails, meeting minute items, Production and QC Daily Reports, material delivery tickets, photographs) must reference Schedule Activities that are being addressed. All test reports (e.g., concrete, soil compaction, weld, pressure) must reference Schedule Activities that are being addressed.

1.8 ADDITIONAL SCHEDULING REQUIREMENTS

Any references to additional scheduling requirements, including systems to be inspected, tested and commissioned, that are located throughout the remainder of the Contract Documents, are subject to all requirements of this section.

PART 2 PRODUCTS

Not used.

PART 3 EXECUTION

Not used.

-- End of Section --

SECTION 01 33 00

SUBMITTAL PROCEDURES
05/11

PART 1 GENERAL

1.1 DEFINITIONS

1.1.1 Submittal Descriptions (SD)

Submittals requirements are specified in the technical sections. Submittals are identified by Submittal Description (SD) numbers and titles as follows:

SD-01 Preconstruction Submittals

Submittals which are required prior to or commencing work on site.

Certificates of insurance

Surety bonds

List of proposed Subcontractors

List of proposed products

Construction progress schedule

Network Analysis Schedule (NAS)

Submittal register

Schedule of prices or Earned Value Report

Health and safety plan

Work plan

Quality Control(QC) plan

Environmental protection plan

SD-02 Shop Drawings

Drawings, diagrams and schedules specifically prepared to illustrate some portion of the work.

Diagrams and instructions from a manufacturer or fabricator for use in producing the product and as aids to the Contractor for integrating the product or system into the project.

Drawings prepared by or for the Contractor to show how multiple systems and interdisciplinary work will be coordinated.

SD-03 Product Data

Catalog cuts, illustrations, schedules, diagrams, performance charts,

instructions and brochures illustrating size, physical appearance and other characteristics of materials, systems or equipment for some portion of the work.

Samples of warranty language when the contract requires extended product warranties.

SD-05 Design Data

Design calculations, mix designs, analyses or other data pertaining to a part of work.

SD-06 Test Reports

Report signed by authorized official of testing laboratory that a material, product or system identical to the material, product or system to be provided has been tested in accord with specified requirements. Unless specified in another section, testing must have been within three years of date of contract award for the project.

Report which includes findings of a test required to be performed by the Contractor on an actual portion of the work or prototype prepared for the project before shipment to job site.

Report which includes finding of a test made at the job site or on sample taken from the job site, on portion of work during or after installation.

Investigation reports.

Daily logs and checklists.

Final acceptance test and operational test procedure.

SD-07 Certificates

Statements printed on the manufacturer's letterhead and signed by responsible officials of manufacturer of product, system or material attesting that product, system or material meets specification requirements. Must be dated after award of project contract and clearly name the project.

Document required of Contractor, or of a manufacturer, supplier, installer or Subcontractor through Contractor. The document purpose is to further promote the orderly progression of a portion of the work by documenting procedures, acceptability of methods or personnel qualifications.

Confined space entry permits.

Text of posted operating instructions.

SD-08 Manufacturer's Instructions

Preprinted material describing installation of a product, system or material, including special notices and (MSDS)concerning impedances, hazards and safety precautions.

SD-09 Manufacturer's Field Reports

Documentation of the testing and verification actions taken by manufacturer's representative at the job site, in the vicinity of the job site, or on a sample taken from the job site, on a portion of the work, during or after installation, to confirm compliance with manufacturer's standards or instructions. The documentation must be signed by an authorized official of a testing laboratory or agency and state the test results; and indicate whether the material, product, or system has passed or failed the test.

Factory test reports.

SD-10 Operation and Maintenance Data

Data that is furnished by the manufacturer, or the system provider, to the equipment operating and maintenance personnel, including manufacturer's help and product line documentation necessary to maintain and install equipment. This data is needed by operating and maintenance personnel for the safe and efficient operation, maintenance and repair of the item.

This data is intended to be incorporated in an operations and maintenance manual or control system.

SD-11 Closeout Submittals

Documentation to record compliance with technical or administrative requirements or to establish an administrative mechanism.

Submittals required for Guiding Principle Validation (GPV) or Third Party Certification (TPC).

Special requirements necessary to properly close out a construction contract. For example, Record Drawings and as-built drawings. Also, submittal requirements necessary to properly close out a major phase of construction on a multi-phase contract.

Interim "DD Form 1354" with cost breakout for all assets 30 days prior to facility turnover.

1.1.2 Approving Authority

Office or designated person authorized to approve submittal.

1.1.3 Work

As used in this section, on- and off-site construction required by contract documents, including labor necessary to produce submittals, construction, materials, products, equipment, and systems incorporated or to be incorporated in such construction.

1.2 SUBMITTALS

Government approval is required for submittals with a "G" designation; submittals not having a "G" designation are for information only. When used, a designation following the "G" designation identifies the office that will review the submittal for the Government. Submittals with an "S" are for inclusion in the Sustainability Notebook, in conformance to Section 01 33 29 SUSTAINABILITY REPORTING. Submit the following in accordance with

this section.

SD-01 Preconstruction Submittals

Submittal Register G

1.3 SUBMITTAL CLASSIFICATION

Submittals are classified as follows:

1.3.1 Government Approved (G)

Government approval is required for extensions of design, critical materials, deviations, equipment whose compatibility with the entire system must be checked, and other items as designated by the Contracting Officer. Within the terms of the Contract Clause entitled, "Specifications and Drawings for Construction," they are considered to be "shop drawings."

1.3.2 Sustainability Submittals (S)

Submittals for Guiding Principle Validation (GPV) or Third Party Certification (TPC) are indicated with an "S" designation. Submit the information required by the technical sections that demonstrates compliance with the sustainable requirement, and for inclusion in the Sustainability Notebook as required by Section 01 33 29 SUSTAINABILITY REPORTING. If the submittal is also provided under another another SD, provide a separate submittal under SD-11 that only provides that portion of the submittal that demonstrates compliance with the sustainable requirement. Schedule submittals for these items throughout the course of construction as provided; do not wait until closeout.

1.4 FORWARDING SUBMITTALS REQUIRING GOVERNMENT APPROVAL

1.4.1 Submittals Required from the Contractor

As soon as practicable after award of contract, and before procurement of fabrication, forward to the Contracting Officer's Representative submittals required in the technical sections of this specification, including shop drawings, product data and samples. Forward one copy of the transmittal form for all submittals to the Resident Officer in Charge of Construction.

The Contracting Officer's Representative will review and approve for the Contracting Officer those submittals reserved for Contracting Officer approval to verify submittals comply with the contract requirements.

1.4.1.1 O&M Data

The Contracting Officer's Respresentative will review and approve for the Contracting Officer O&M Data to verify the submittals comply with the contract requirements; submit data specified for a given item within 30 calendar days after the item is delivered to the contract site.

In the event the Contractor fails to deliver O&M Data within the time limits specified, the Contracting Officer may withhold from progress payments 50 percent of the price of the item with which such O&M Data are applicable.

1.5 PREPARATION

1.5.1 Transmittal Form

Transmit each submittal, except sample installations and sample panels to office of the Contracting Officer. Transmit submittals with transmittal form prescribed by Contracting Officer and standard for project. On the transmittal form identify Contractor, indicate date of submittal, and include information prescribed by transmittal form and required in paragraph entitled, "Identifying Submittals," of this section.

1.5.2 Identifying Submittals

When submittals are provided by a Subcontractor, the Prime Contractor is to prepare, review and stamp with Contractor's approval all specified submittals prior to submitting for Government approval.

Identify submittals, except sample installations and sample panels, with the following information permanently adhered to or noted on each separate component of each submittal and noted on transmittal form. Mark each copy of each submittal identically, with the following:

a. Project title and location.

b. Construction contract number.

c. Date of the drawings and revisions.

d. Name, address, and telephone number of subcontractor, supplier, manufacturer and any other subcontractor associated with the submittal.

e. Section number of the specification section by which submittal is required.

f. Submittal description (SD) number of each component of submittal.

g. When a resubmission, add alphabetic suffix on submittal description, for example, submittal 18 would become 18A, to indicate resubmission.

h. Product identification and location in project.

1.5.3 Format for SD-02 Shop Drawings

Shop drawings are not to be less than 8 1/2 by 11 inches nor more than 30 by 42 inches, except for full size patterns or templates. Prepare drawings to accurate size, with scale indicated, unless other form is required. Drawings are to be suitable for reproduction and be of a quality to produce clear, distinct lines and letters with dark lines on a white background.

Present 8 1/2 by 11 inches sized shop drawings as part of the bound volume for submittals required by section. Present larger drawings in sets.

Include on each drawing the drawing title, number, date, and revision numbers and dates, in addition to information required in paragraph entitled, "Identifying Submittals," of this section.

Number drawings in a logical sequence. Contractors may use their own number system. Each drawing is to bear the number of the submittal in a

uniform location adjacent to the title block. Place the Government contract number in the margin, immediately below the title block, for each drawing.

Reserve a blank space, no smaller than 4 square inches on the right hand side of each sheet for the Government disposition stamp.

Dimension drawings, except diagrams and schematic drawings; prepare drawings demonstrating interface with other trades to scale. Use the same unit of measure for shop drawings as indicated on the contract drawings. Identify materials and products for work shown.

Include the nameplate data, size and capacity on drawings. Also include applicable federal, military, industry and technical society publication references.

Submit drawings PDF format.

1.5.4 Format of SD-03 Product Data and SD-08 Manufacturer's Instructions

Present product data submittals for each section as a complete, bound volume. Include table of contents, listing page and catalog item numbers for product data.

Indicate, by prominent notation, each product which is being submitted; indicate specification section number and paragraph number to which it pertains.

Supplement product data with material prepared for project to satisfy submittal requirements for which product data does not exist. Identify this material as developed specifically for project, with information and format as required for submission of SD-07 Certificates.

Include the manufacturer's name, trade name, place of manufacture, and catalog model or number on product data. Also include applicable federal, military, industry and technical society publication references. Should manufacturer's data require supplemental information for clarification, submit as specified for SD-07 Certificates.

Where equipment or materials are specified to conform to industry and technical society reference standards of the organizations such as American National Standards Institute (ANSI), ASTM International (ASTM), National Electrical Manufacturer's Association (NEMA), Underwriters Laboratories (UL), and Association of Edison Illuminating Companies (AEIC), submit proof of such compliance. The label or listing by the specified organization will be acceptable evidence of compliance. In lieu of the label or listing, submit a certificate from an independent testing organization, competent to perform testing, and approved by the Contracting Officer. State on the certificate that the item has been tested in accordance with the specified organization's test methods and that the item complies with the specified organization's reference standard.

Collect required data submittals for each specific material, product, unit of work, or system into a single submittal and marked for choices, options, and portions applicable to the submittal. Mark each copy of the product data identically. Partial submittals will [not] be accepted for expedition of construction effort.

Submit manufacturer's instructions prior to installation.

1.5.5 Format of SD-05 Design Data and SD-07 Certificates

Provide design data and certificates on 8 1/2 by 11 inches paper. Provide a bound volume for submittals containing numerous pages.

1.5.6 Format of SD-06 Test Reports and SD-09 Manufacturer's Field Reports

Provide reports on 8 1/2 by 11 inches paper in a complete bound volume.

Indicate by prominent notation, each report in the submittal. Indicate specification number and paragraph number to which it pertains.

1.5.7 Format of SD-10 Operation and Maintenance Data (O&M)

Comply with the requirements specified in Section 01 78 23 OPERATION AND MAINTENANCE DATA for O&M Data format.

1.5.8 Format of SD-01 Preconstruction Submittals and SD-11 Closeout Submittals

When submittal includes a document which is to be used in project or become part of project record, other than as a submittal, do not apply Contractor's approval stamp to document, but to a separate sheet accompanying document.

1.6 QUANTITY OF SUBMITTALS

1.6.1 Number of Copies of SD-02 Shop Drawings

Submit two copies of submittals of shop drawings requiring review and approval only by QC organization and three copies of shop drawings requiring review and approval by Contracting Officer.

1.6.2 Number of Copies of SD-03 Product Data and SD-08 Manufacturer's Instructions

Submit in compliance with quantity requirements specified for shop drawings.

1.6.3 Number of Copies SD-05 Design Data and SD-07 Certificates

Submit in compliance with quantity requirements specified for shop drawings.

1.6.4 Number of Copies SD-06 Test Reports and SD-09 Manufacturer's Field Reports

Submit in compliance with quantity and quality requirements specified for shop drawings other than field test results that will be submitted with QC reports.

1.6.5 Number of Copies of SD-10 Operation and Maintenance Data

Submit three copies of O&M Data to the Contracting Officer for review and approval.

1.6.6 Number of Copies of SD-01 Preconstruction Submittals and SD-11 Closeout Submittals

Unless otherwise specified, submit two sets of administrative submittals.

1.7 VARIATIONS

Variations from contract requirements require both Designer of Record (DOR) and Government approval pursuant to contract Clause FAR 52.236-21 and will be considered where advantageous to Government.

1.7.1 Considering Variations

Discussion with Contracting Officer prior to submission, after consulting with the DOR, will help ensure functional and quality requirements are met and minimize rejections and re-submittals. When contemplating a variation which results in lower cost, consider submission of the variation as a Value Engineering Change Proposal (VECP).

Specifically point out variations from contract requirements in transmittal letters. Failure to point out deviations may result in the Government requiring rejection and removal of such work at no additional cost to the Government.

1.7.2 Proposing Variations

When proposing variation, deliver written request to the Contracting Officer, with documentation of the nature and features of the variation and why the variation is desirable and beneficial to Government, including the DOR's written analysis and approval. If lower cost is a benefit, also include an estimate of the cost savings. In addition to documentation required for variation, include the submittals required for the item. Clearly mark the proposed variation in all documentation.

1.7.3 Warranting that Variations are Compatible

When delivering a variation for approval, Contractor, including its Designer(s) of Record, warrants that this contract has been reviewed to establish that the variation, if incorporated, will be compatible with other elements of work.

1.7.4 Review Schedule is Modified

In addition to normal submittal review period, a period of 10 working days will be allowed for consideration by the Government of submittals with variations.

1.8 SUBMITTAL REGISTER

Prepare and maintain submittal register, as the work progresses. Do not change data which is output in columns (c), (d), (e), and (f) as delivered by Government; retain data which is output in columns (a), (g), (h), and (i) as approved. A submittal register showing items of equipment and materials for which submittals are required by the specifications is provided as an attachment. This list may not be all inclusive and additional submittals may be required. The Government will provide the initial submittal register in electronic format with the following fields completed, to the extent that will be required by the Government during subsequent usage.

Column (c): Lists specification section in which submittal is required.

Column (d): Lists each submittal description (SD No. and type, e.g. SD-02 Shop Drawings) required in each specification section.

Column (e): Lists one principal paragraph in specification section where a material or product is specified. This listing is only to facilitate locating submitted requirements. Do not consider entries in column (e) as limiting project requirements.

Column (f): Indicate approving authority for each submittal.

Thereafter, the Contractor is to track all submittals by maintaining a complete list, including completion of all data columns, including dates on which submittals are received and returned by the Government.

1.8.1 Use of Submittal Register

Submit submittal register. Submit with QC plan and project schedule. Verify that all submittals required for project are listed and add missing submittals. Coordinate and complete the following fields on the register submitted with the QC plan and the project schedule:

Column (a) Activity Number: Activity number from the project schedule.

Column (g) Contractor Submit Date: Scheduled date for approving authority to receive submittals.

Column (h) Contractor Approval Date: Date Contractor needs approval of submittal.

Column (i) Contractor Material: Date that Contractor needs material delivered to Contractor control.

1.8.2 Contractor Use of Submittal Register

Update the following fields in the Government-furnished submittal register program with each submittal throughout contract.

Column (b) Transmittal Number: Contractor assigned list of consecutive numbers.

Column (j) Action Code (k): Date of action used to record Contractor's review when forwarding submittals to QC.

Column (l) List date of submittal transmission.

Column (q) List date approval received.

1.8.3 Approving Authority Use of Submittal Register

Update the following fields in the Government-furnished submittal register program .

Column (b) Transmittal Number: Contractor assigned list of consecutive numbers.

Column (l) List date of submittal receipt.

Column (m) through (p) List Date related to review actions.

Column (q) List date returned to Contractor.

1.8.4 Action Codes

Entries for columns (j) and (o), are to be used are as follows (others may be prescribed by Transmittal Form):

1.8.4.1 Government Review Action Codes

"A" - "Approved as submitted"; "Completed"

"B" - "Approved, except as noted on drawings"; "Completed"

"C" - "Approved, except as noted on drawings; resubmission required"; "Resubmit"

"D" - "Returned by separate correspondence"; "Completed"

"E" - "Disapproved (See attached)"; "Resubmit"

"F" - "Receipt acknowledged"; "Completed"

"G" - "Other (Specify)"; "Resubmit"

"X" - "Receipt acknowledged, does not comply with contract requirements"; "Resubmit"

1.8.5 Copies Delivered to the Government

Deliver one copy of submittal register updated by Contractor to Government with each invoice request.

1.9 SCHEDULING

Schedule and submit concurrently submittals covering component items forming a system or items that are interrelated. Include certifications to be submitted with the pertinent drawings at the same time. No delay damages or time extensions will be allowed for time lost in late submittals.

a. Coordinate scheduling, sequencing, preparing and processing of submittals with performance of work so that work will not be delayed by submittal processing. Allow for potential resubmittal of requirements.

b. Submittals called for by the contract documents will be listed on the register. If a submittal is called for but does not pertain to the contract work, the Contractor is to include the submittal in the register and annotate it "N/A" with a brief explanation. Approval by the Contracting Officer does not relieve the Contractor of supplying submittals required by the contract documents but which have been omitted from the register or marked "N/A."

c. Re-submit register and annotate monthly by the Contractor with actual submission and approval dates. When all items on the register have been fully approved, no further re-submittal is required.

d. Carefully control procurement operations to ensure that each individual submittal is made on or before the Contractor scheduled submittal date

shown on the approved "Submittal Register."

e. Except as specified otherwise, allow review period, beginning with receipt by approving authority, that includes at least 15 working days for submittals for QC Manager approval and 20 working days for submittals for Contracting Officer approval. Period of review for submittals with Contracting Officer approval begins when Government receives submittal from QC organization.

f. For submittals requiring review by fire protection engineer, allow review period, beginning when Government receives submittal from QC organization, of 30working days for return of submittal to the Contractor.

g. Period of review for each resubmittal is the same as for initial submittal.

1.9.1 Reviewing, Certifying, Approving Authority

The QC organization is responsible for reviewing and certifying that submittals are in compliance with contract requirements. Approving authority on submittals is QC Manager unless otherwise specified for specific submittal. At each "Submittal" paragraph in individual specification sections, a notation "G," following a submittal item, indicates Contracting Officer is approving authority for that submittal item.

1.9.2 Constraints

Conform to provisions of this section, unless explicitly stated otherwise for submittals listed or specified in this contract.

Submit complete submittals for each definable feature of work. Submit at the same time components of definable feature interrelated as a system.

When acceptability of a submittal is dependent on conditions, items, or materials included in separate subsequent submittals, submittal will be returned without review.

Approval of a separate material, product, or component does not imply approval of assembly in which item functions.

1.9.3 QC Organization Responsibilities

a. Note date on which submittal was received from Contractor on each submittal.

b. Review each submittal; and check and coordinate each submittal with requirements of work and contract documents.

c. Review submittals for conformance with project design concepts and compliance with contract documents.

d. Act on submittals, determining appropriate action based on QC organization's review of submittal.

(1) When QC Manager is approving authority, take appropriate action on submittal from the possible actions defined in paragraph entitled, "Approved[/Accepted] Submittals," of the section."

(2) When Contracting Officer is approving authority or when variation

has been proposed, forward submittal to Government with certifying statement or return submittal marked "not reviewed" or "revise and resubmit" as appropriate. The QC organization's review of submittal determines appropriate action.

e. Ensure that material is clearly legible.

f. Stamp each sheet of each submittal with QC certifying statement or approving statement, except that data submitted in bound volume or on one sheet printed on two sides may be stamped on the front of the first sheet only.

(1) When approving authority is Contracting Officer, QC organization will certify submittals forwarded to Contracting Officer with the following certifying statement:

"I hereby certify that the (equipment) (material) (article) shown and marked in this submittal is that proposed to be incorporated with contract Number _____, is in compliance with the contract drawings and specification, can be installed in the allocated spaces, and is submitted for Government approval.

Certified by Submittal Reviewer _____, Date _____
(Signature when applicable)

Certified by QC Manager _____, Date _____"
(Signature)

(2) When approving authority is QC Manager, QC Manager will use the following approval statement when returning submittals to Contractor as "Approved" or "Approved as Noted."

"I hereby certify that the (material) (equipment) (article) shown and marked in this submittal and proposed to be incorporated with contract Number _____, is in compliance with the contract drawings and specification, can be installed in the allocated spaces, and is approved for use.

Certified by Submittal Reviewer _____, Date _____
(Signature when applicable)

Approved by QC Manager _____, Date _____"
(Signature)

g. Sign certifying statement or approval statement. The QC organization member designated in the approved QC plan is the person signing certifying statements. The use of original ink for signatures is required. Stamped signatures are not acceptable.

h. Update submittal register as submittal actions occur and maintain the submittal register at project site until final acceptance of all work by Contracting Officer.

i. Retain a copy of approved submittals at project site, including Contractor's copy of approved samples.

1.10 GOVERNMENT APPROVING AUTHORITY

When approving authority is Contracting Officer, the Government will:

a. Note date on which submittal was received from QC Manager.

b. Review submittals for approval within scheduling period specified and only for conformance with project design concepts and compliance with contract documents.

c. Identify returned submittals with one of the actions defined in paragraph entitled, "Review Notations," of this section and with markings appropriate for action indicated.

Upon completion of review of submittals requiring Government approval, stamp and date submittals. All copies of the submittal will be retained by the Contracting Officer and no copies of the submittal will be returned to the Contractor.

1.10.1 Review Notations

Submittals will be returned to the Contractor with the following notations:

a. Submittals marked "approved" or "accepted" authorize the Contractor to proceed with the work covered.

b. Submittals marked "approved as noted" "or approved, except as noted, resubmittal not required," authorize the Contractor to proceed with the work covered provided he takes no exception to the corrections.

c. Submittals marked "not approved" or "disapproved," or "revise and resubmit," indicate noncompliance with the contract requirements or design concept, or that submittal is incomplete. Resubmit with appropriate changes. No work shall proceed for this item until resubmittal is approved.

d. Submittals marked "not reviewed" will indicate submittal has been previously reviewed and approved, is not required, does not have evidence of being reviewed and approved by Contractor, or is not complete. A submittal marked "not reviewed" will be returned with an explanation of the reason it is not reviewed. Resubmit submittals returned for lack of review by Contractor or for being incomplete, with appropriate action, coordination, or change.

1.11 DISAPPROVED[OR REJECTED] SUBMITTALS

Contractor shall make corrections required by the Contracting Officer. If the Contractor considers any correction or notation on the returned submittals to constitute a change to the contract drawings or specifications; notice as required under the clause entitled, "Changes," is to be given to the Contracting Officer. Contractor is responsible for the dimensions and design of connection details and construction of work. Failure to point out deviations may result in the Government requiring rejection and removal of such work at the Contractor's expense.

If changes are necessary to submittals, make such revisions and submission of the submittals in accordance with the procedures above. No item of work requiring a submittal change is to be accomplished until the changed submittals are approved.

1.12 APPROVED/ACCEPTED SUBMITTALS

The Contracting Officer's approval or acceptance of submittals is not to be construed as a complete check, and indicates only that the general method of construction, materials, detailing and other information are satisfactory.

Approval or acceptance will not relieve the Contractor of the responsibility for any error which may exist, as the Contractor under the Contractor Quality Control (CQC) requirements of this contract is responsible for dimensions, the design of adequate connections and details, and the satisfactory construction of all work.

After submittals have been approved or accepted by the Contracting Officer, no resubmittal for the purpose of substituting materials or equipment will be considered unless accompanied by an explanation of why a substitution is necessary.

1.13 APPROVED SAMPLES

Approval of a sample is only for the characteristics or use named in such approval and is not be construed to change or modify any contract requirements. Before submitting samples, the Contractor to assure that the materials or equipment will be available in quantities required in the project. No change or substitution will be permitted after a sample has been approved.

Match the approved samples for materials and equipment incorporated in the work. If requested, approved samples, including those which may be damaged in testing, will be returned to the Contractor, at his expense, upon completion of the contract. Samples not approved will also be returned to the Contractor at its expense, if so requested.

Failure of any materials to pass the specified tests will be sufficient cause for refusal to consider, under this contract, any further samples of the same brand or make of that material. Government reserves the right to disapprove any material or equipment which previously has proved unsatisfactory in service.

Samples of various materials or equipment delivered on the site or in place may be taken by the Contracting Officer for testing. Samples failing to meet contract requirements will automatically void previous approvals. Contractor to replace such materials or equipment to meet contract requirements.

Approval of the Contractor's samples by the Contracting Officer does not relieve the Contractor of his responsibilities under the contract.

PART 2 PRODUCTS

Not Used

PART 3 EXECUTION

Not Used

-- End of Section --

SECTION 01 35 26.00 22

GOVERNMENTAL SAFETY REQUIREMENTS (PWD ME)
04/15

PART 1 GENERAL

1.1 REFERENCES

The publications listed below form a part of this specification to the extent referenced. The publications are referred to within the text by the basic designation only.

AMERICAN SOCIETY OF SAFETY ENGINEERS (ASSE/SAFE)

ASSE/SAFE A10.32	(2004) Fall Protection
ASSE/SAFE A10.34	(2001; R 2005) Protection of the Public on or Adjacent to Construction Sites
ASSE/SAFE Z359.1	(2007) Safety Requirements for Personal Fall Arrest Systems, Subsystems and Components

ASME INTERNATIONAL (ASME)

ASME B30.22	(2010) Articulating Boom Cranes
ASME B30.3	(2009) Tower Cranes
ASME B30.5	(2011) Mobile and Locomotive Cranes
ASME B30.8	(2010) Floating Cranes and Floating Derricks

NATIONAL FIRE PROTECTION ASSOCIATION (NFPA)

NFPA 10	(2010; Errata 2012) Standard for Portable Fire Extinguishers
NFPA 241	(2009) Safeguarding Construction, Alteration, and Demolition Operations
NFPA 51B	(2009; TIA 09-1) Fire Prevention during Welding, Cutting, and Other Hot Work
NFPA 70	(2014; AMD 1 2013; Errata 1 2013; AMD 2 2013; Errata 2 2013; AMD 3 2014; Errata 3 2014) National Electrical Code
NFPA 70E	(2012; Errata 1) Electrical Safety in the Workplace

U.S. ARMY CORPS OF ENGINEERS (USACE)

EM 385-1-1	(2014) Safety and Health Requirements Manual

U.S. NATIONAL ARCHIVES AND RECORDS ADMINISTRATION (NARA)

10 CFR 20	Standards for Protection against Radiation
29 CFR 1910	Occupational Safety and Health Standards
29 CFR 1910.146	Permit-required Confined Spaces
29 CFR 1910.147	Control of Hazardous Energy (Lock Out/Tag Out)
29 CFR 1915	Confined and Enclosed Spaces and Other Dangerous Atmospheres in Shipyard Employment
29 CFR 1926	Safety and Health Regulations for Construction
29 CFR 1926.16	Rules of Construction
29 CFR 1926.500	Fall Protection
CPL 2.100	(1995) Application of the Permit-Required Confined Spaces (PRCS) Standards, 29 CFR 1910.146.

U.S. NAVAL FACILITIES ENGINEERING COMMAND (NAVFAC)

NAVFAC P-307	(2012) Management of Weight Handling Equipment
ATTACHMENT "A"	"CONTRACTOR CRANE, MULTI-PURPOSE MACHINE, FORKLIFT, CONSTRUCTION EQUIPMENT, AND RIGGING GEAR REQUIREMENTS"
ATTACHMENT "B"	"PORTSMOUTH NAVAL SHIPYARD UTILITY LOCATING PROCEDURES"

The attachments are included following the end of this specification section. If attachments are missing from this copy of specification notify the Contracting Officer.

1.2 DEFINITIONS

a. Competent Person for Fall Protection: A person who is capable of identifying hazardous or dangerous conditions in the personal fall arrest system or any component thereof, as well as their application and use with related equipment, and has the authority to take prompt corrective measures to eliminate the hazards of falling.

b. High Visibility Accident: Any mishap which may generate publicity or high visibility.

c. Medical Treatment: Treatment administered by a physician or by

registered professional personnel under the standing orders of a physician. Medical treatment does not include first aid treatment even though provided by a physician or registered personnel.

d. Operating Envelope: The area surrounding any crane. Inside this "envelope" is the crane, the operator, riggers and crane walkers, rigging gear between the hook and the load, the load and the crane's supporting structure (ground, rail, etc.).

e. Recordable Injuries or Illnesses: Any work-related injury or illness that results in:

(1) Death, regardless of the time between the injury and death, or the length of the illness;

(2) Days away from work (any time lost after day of injury/illness onset);

(3) Restricted work;

(4) Transfer to another job;

(5) Medical treatment beyond first aid;

(6) Loss of consciousness; or

(7) A significant injury or illness diagnosed by a physician or other licensed health care professional, even if it did not result in (1) through (6) above.

f. "USACE" property and equipment specified in USACE EM 385-1-1 should be interpreted as Government property and equipment.

g. Weight Handling Equipment (WHE) Accident: A WHE accident occurs when any one or more of the eight elements in the operating envelope fails to perform correctly during operation, including operation during maintenance or testing resulting in personnel injury or death; material or equipment damage; dropped load; derailment; two-blocking; overload; or collision, including unplanned contact between the load, crane, or other objects. A dropped load, derailment, two-blocking, overload and collision are considered accidents even though no material damage or injury occur. A component failure (e.g., motor burnout, gear tooth failure, bearing failure) is not considered an accident solely due to material or equipment damage unless the component failure results in damage to other components (e.g., dropped boom, dropped load, roll over, etc.). Any mishap meeting the criteria described above shall be documented in both the Contractor Significant Incident Report (CSIR) and using the NAVFAC prescribed Navy Crane Center (NCC) form submitted within five days both as provided by the Contracting Officer. Comply with additional requirements and procedures for accidents in accordance with NAVFAC P-307, Section 12.

1.3 SUBMITTALS

Government approval is required for submittals with a "G" designation; submittals not having a "G" designation are for Contractor Quality Control approval. Submit the following in accordance with [Section 01 33 00 SUBMITTAL PROCEDURES] [for Design-Bid-Build projects] [Section 01 33 10.05 20 DESIGN SUBMITTAL PROCEDURES and Section

01 33 00.05 20 CONSTRUCTION SUBMITTAL PROCEDURES] [for Design-Build projects]:

SD-01 Preconstruction Submittals

Accident Prevention Plan (APP); G

Activity Hazard Analysis (AHA); G

Crane Critical Lift Plan; G

Proof of qualification for Crane Operators; G

SD-06 Test Reports

Notifications and Reports

Submit reports as their incidence occurs, in accordance with the requirements of the paragraph entitled, "Notifications and Reports."

Accident Reports; G

Monthly Exposure Report; G

Crane Reports; G

SD-07 Certificates

Confined Space Entry Permit; G

Hot work permit; G

License certificates; G

Contractor Safety Self-Evaluation Checklist; G

Accident Notification; G

Third Party Certification of Barge-Mounted Mobile Cranes; G

Certificate of Compliance (Crane); G

Submit one copy of each permit/certificate attached to each Daily Production or Quality Control Report

1.4 CONTRACTOR SAFETY SELF-EVALUATION CHECKLIST

Contracting Officer will provide a "Contractor Safety Self-Evaluation checklist" to the Contractor at the pre-construction conference. Complete the checklist monthly and submit with each request for payment voucher. An acceptable score of 90 or greater is required. Failure to submit the completed safety self-evaluation checklist or achieve a score of at least 90, may result in a retention of up to 10 percent of the voucher. Additionally, provide a Monthly Exposure Report and attach to the monthly billing request. This report is a compilation of employee-hours worked each month for all site workers, both prime and subcontractor. Failure to submit the report may result in retention of up to 10 percent of the

voucher. The Contracting Officer will submit a copy of the Contractor Safety Self-Evaluation and Monthly Exposure Report to the local safety and occupational health office.

1.5 REGULATORY REQUIREMENTS

In addition to the detailed requirements included in the provisions of this contract, comply with the most recent edition of USACE EM 385-1-1, and applicable Federal, State, and local laws, ordinances, criteria, rules and regulations. Submit matters of interpretation of standards to the appropriate administrative agency for resolution before starting work. Where the requirements of this specification, applicable laws, criteria, ordinances, regulations, and referenced documents vary, the most stringent requirements govern.

1.6 SITE QUALIFICATIONS, DUTIES AND MEETINGS

1.6.1 Personnel Qualifications

1.6.1.1 Site Safety and Health Officer (SSHO)

The SSHO must meet with requirements of EM 385-1-1 Section 1 and ensure that the requirements of 29 CFR 1926.16 are met for this project. Provide a Safety oversight team that includes a minimum of one (1) Competent Person at each project site to function as the Safety and Health Officer (SSHO). The SSHO or an equally-qualified designated representative/alternate shall be at the work site at all times to implement and administer the Contractor's safety program and government-accepted Accident Prevention Plan. The SSHO's training, experience, and qualifications shall be as required by EM 385-1-1 paragraph 01.A.17, entitled SITE SAFETY AND HEALTH OFFICER (SSHO), and all associated sub-paragraphs.

A Competent Person shall be provided for all of the hazards identified in the Contractor's Safety and Health Program in accordance with the accepted Accident Prevention Plan, and shall be on-site at all times when the work that presents the hazards associated with their professional expertise is being performed. Provide the credentials of the Competent Persons(s) to the Contracting Officer for acceptance in consultation with the Safety Office.

1.6.1.2 Contractor Quality Control (QC) Manager

The Contractor Quality Control (QC) Manager canbe the SSHO on this project.

1.6.1.3 Competent Person for Confined Space Entry

Provide a "Competent Person" to supervise the entry into each confined space. That individual must meet the requirements and definition of Competent Person as contained in EM 385-1-1.

1.6.1.4 Crane Operators

Meet the crane operators' requirements in USACE EM 385-1-1, Section 16 and Appendix I. In addition, for mobile cranes with Original Equipment Manufacturer (OEM) rated capacitates of 2,000 pounds or greater, designate crane operators as qualified by a source that qualifies crane operators (i.e., union, a government agency, or an organization that tests and qualifies crane operators). Provide proof of current qualification. In addition, the Contractor shall comply with Contractor Operated Crane

Requirements included in the latest revision of document NAVFAC P-307 Section 1.7.2 "Contractor Operated Cranes," and Appendix P, Figure P-1 and with 29 CFR 1926, Subpart CC.

1.6.2 Personnel Duties

1.6.2.1 Site Safety and Health Officer (SSHO)

The SSHO shall:

a. Conduct daily safety and health inspections and maintain a written log which includes area/operation inspected, date of inspection, identified hazards, recommended corrective actions, estimated and actual dates of corrections. Attach safety inspection logs to the Contractors' daily production or quality control report.

b. Conduct mishap investigations and complete required reports. Maintain the OSHA Form 300 and Daily Production reports for prime and sub-contractors.

c. Maintain applicable safety reference material on the job site.

d. Attend the pre-construction conference, pre-work meetings including preparatory inspection meeting, and periodic in-progress meetings.

e. Implement and enforce accepted APP's and AHA's.

f. Maintain a safety and health deficiency tracking system that monitors outstanding deficiencies until resolution. Post a list of unresolved safety and health deficiencies on the safety bulletin board.

g. Ensure sub-contractor compliance with safety and health requirements.

h. Maintain a list of hazardous chemicals on site and their Safety Data Sheet (SDS).

Failure to perform the above duties will result in dismissal of the Project Superintendent, QC Manager, and/or SSHO, and a project work stoppage. The project work stoppage will remain in effect pending approval of a suitable replacement.

1.6.3 Meetings

1.6.3.1 Preconstruction Conference

a. Contractor representatives who have a responsibility or significant role in accident prevention on the project shall attend the preconstruction conference. This includes the Project Superintendent, Site Safety and Health Officer, Quality Control Manager, or any other assigned safety and health professionals who participated in the development of the APP (including the Activity Hazard Analyses (AHAs) and special plans, program and procedures associated with it).

b. Discuss the details of the submitted APP to include incorporated plans, programs, procedures and a listing of anticipated AHAs that will be developed and implemented during the performance of the contract. This list of proposed AHAs will be reviewed at the conference and an agreement will be reached between the Contractor and the Contracting Officer's representative as to which phases will require an analysis.

In addition, establish a schedule for the preparation, submittal, review, and acceptance of AHAs to preclude project delays.

c. Deficiencies in the submitted APP will be brought to the attention of the Contractor at the preconstruction conference, and the Contractor shall revise the plan to correct deficiencies and re-submit it for acceptance. Do not begin work until there is an accepted APP.

1.6.3.2 Safety Meetings

Conduct and document meetings as required by EM 385-1-1. Attach minutes showing contract title, signatures of attendees and a list of topics discussed to the Contractors' daily production or quality control report.

1.7 ACCIDENT PREVENTION PLAN (APP)

Use a qualified person to prepare the written site-specific APP. Prepare the APP in accordance with the format and requirements of USACE EM 385-1-1 and as supplemented herein. Cover all paragraph and subparagraph elements in USACE EM 385-1-1, Appendix A, "Minimum Basic Outline for Accident Prevention Plan". Specific requirements for some of the APP elements are described below. The APP shall be job-specific and address any unusual or unique aspects of the project or activity for which it is written. The APP shall interface with the Contractor's overall safety and health program. Include any portions of the Contractor's overall safety and health program referenced in the APP in the applicable APP element and made site-specific. The Government considers the Prime Contractor to be the "controlling authority" for all work site safety and health of the subcontractors. Contractors are responsible for informing their subcontractors of the safety provisions under the terms of the contract and the penalties for noncompliance, coordinating the work to prevent one craft from interfering with or creating hazardous working conditions for other crafts, and inspecting subcontractor operations to ensure that accident prevention responsibilities are being carried out. The APP shall be signed by the person and firm (senior person) preparing the APP, the Contractor, the on-site superintendent, the designated Site Safety and Health Officer, the Contractor Quality Control Manager, and any designated CSP or CIH.

Submit the APP to the Contracting Officer 15 calendar days prior to the date of the preconstruction conference for acceptance. Work cannot proceed without an accepted APP.

Once accepted by the Contracting Officer, the APP and attachments will be enforced as part of the contract. Disregarding the provisions of this contract or the accepted APP will be cause for stopping of work, at the discretion of the Contracting Officer, until the matter has been rectified.

Once work begins, changes to the accepted APP shall be made with the knowledge and concurrence of the Contracting Officer, Project Superintendent, SSHO and Quality Control Manager. Should any severe hazard exposure (i.e., imminent danger) become evident, stop work in the area, secure the area, and develop a plan to remove the exposure and control the hazard. Notify the Contracting Officer within 24 hours of discovery. Eliminate/remove the hazard. In the interim, take all necessary action to restore and maintain safe working conditions in order to safeguard onsite personnel, visitors, the public (as defined by ASSE/SAFE A10.34,) and the environment.

Copies of the accepted plan will be maintained at the Contracting Officer's office and at the job site.

Continuously review and amended the APP, as necessary, throughout the life of the contract. Incorporate unusual or high-hazard activities not identified in the original APP as they are discovered.

1.7.1 EM 385-1-1 Contents

In addition to the requirements outlines in Appendix A of USACE EM 385-1-1, the following is required:

a. Names and qualifications (resumes including education, training, experience and certifications) of all site safety and health personnel designated to perform work on this project to include the designated Site Safety and Health Officer and other competent and qualified personnel to be used such as CSPs, CIHs, STSs, CHSTs. Specify the duties of each position.

b. Qualifications of competent and of qualified persons: As a minimum, designate and submit qualifications of competent persons for each of the following major areas: excavation; scaffolding; fall protection; hazardous energy; confined space; health hazard recognition, evaluation and control of chemical, physical and biological agents; personal protective equipment and clothing to include selection, use and maintenance.

c. Confined Space Entry Plan: Develop a confined and/or enclosed space entry plan in accordance with USACE EM 385-1-1, applicable OSHA standards 29 CFR 1910, 29 CFR 1915, and 29 CFR 1926, OSHA Directive CPL 2.100, and any other Federal, State and local regulatory requirements identified in this contract. Identify the qualified person's name and qualifications, training, and experience. Delineate the qualified person's authority to direct work stoppage in the event of hazardous conditions. Include procedure for rescue by Contractor personnel and the coordination with emergency responders. (If there is no confined space work, include a statement that no confined space work exists and none will be created.)

d. Crane Critical Lift Plan: Prepare and sign weight handling critical lift plans for lifts over 75 percent of the capacity of the crane or hoist [(or lifts over 50 percent of the capacity of a barge mounted mobile crane's hoists)] at any radius of lift; lifts involving more than one crane or hoist; lifts of personnel; and lifts involving non-routine rigging or operation, sensitive equipment, or unusual safety risks. Submit 15 calendar days prior to on-site work and include the requirements of USACE EM 385-1-1, paragraph 16.H. and the following:

(1) For lifts of personnel, demonstrate compliance with the requirements of 29 CFR 1926.550(g).

e. Fall Protection and Prevention (FP&P) Program Documentation: The Program Documentation shall be site specific and address all fall hazards in the work place and during different phases of construction. Address how to protect and prevent workers from falling to lower levels when they are exposed to fall hazards above 6 feet in height. A

qualified person for fall protection shall prepare and sign the Program Documentation. Include fall protection and prevention systems, equipment and methods employed for every phase of work, responsibilities, assisted rescue, self-rescue and evacuation procedures, training requirements, and monitoring methods. Revise the Fall Protection and Prevention Program Documentation every six months for lengthy projects, reflecting any changes during the course of construction due to changes in personnel, equipment, systems or work habits. Keep and maintain the accepted Fall Protection and Prevention Program Documentation at the job site for the duration of the project. Include the Fall Protection and Prevention Program Documentation in the Accident Prevention Plan (APP).

The FP&P Plan shall include a Rescue and Evacuation Plan in accordance with USACE EM 385-1-1, Section 21.M. The plan shall include a detailed discussion of the following: methods of rescue; methods of self-rescue; equipment used; training requirement; specialized training for the rescuers; procedures for requesting rescue and medical assistance; and transportation routes to a medical facility. Include the Rescue and Evacuation Plan in the Fall Protection and Prevention (FP&P) Plan, and as part of the Accident Prevention Plan (APP).

1.8 ACTIVITY HAZARD ANALYSIS (AHA)

The Activity Hazard Analysis (AHA) format shall be in accordance with USACE EM 385-1-1, Section 1. Submit the AHA for review at least 5 calendar days prior to the phase preparatory meeting. Format subsequent AHAs as amendments to the APP. The analysis should be used during daily inspections to ensure the implementation and effectiveness of the Portsmouth Naval Shipyard's safety and health controls.

The AHA list will be reviewed periodically (at least monthly) at the Contractor supervisory safety meeting and updated as necessary when procedures, scheduling, or hazards change.

Develop the activity hazard analyses using the project schedule as the basis for the activities performed. Any activities listed on the project schedule will require an AHA. The AHAs will be developed by the Contractor, supplier or subcontractor and provided to the Prime Contractor for submittal to the Contracting Officer.

1.9 DISPLAY OF SAFETY INFORMATION

Within one calendar day after commencement of work, erect a safety bulletin board at the job site. Where size, duration, or logistics of project do not facilitate a bulletin board, an alternative method, acceptable to the Contracting Officer, that is accessible and includes all mandatory information for employee and visitor review, shall be deemed as meeting the requirement for a bulletin board. Include and maintain information on safety bulletin board as required by EM 385-1-1, Section 01.A.06. Additional items required to be posted include:

a. Confined space entry permit.

b. Hot work permit.

1.10 SITE SAFETY REFERENCE MATERIALS

Maintain safety-related references applicable to the project, including those listed in the article "References." Maintain applicable equipment manufacturer's manuals.

1.11 EMERGENCY MEDICAL TREATMENT

Contractors will arrange for their own emergency medical treatment. Government has no responsibility to provide emergency medical treatment.

1.12 NOTIFICATIONS AND REPORTS

1.12.1 Accident Notification

Notify the Contracting Officer as soon as practical, but not later than four hours after any accident meeting the definition of Recordable Injuries or Illnesses or High Visibility Accidents, property damage equal to or greater than $2,000, or any weight handling equipment accident. Ensure positive contact is made with GDA as voice mail and e-mail is not acceptable as official notification. Within notification include contractor name; contract title; type of contract; name of activity, installation or location where accident occurred; date and time of accident; names of personnel injured; extent of property damage, if any; extent of injury, if known, and brief description of accident (to include type of construction equipment used, PPE used, etc.). Preserve the conditions and evidence on the accident site until the Government investigation team arrives on-site and Government investigation is conducted.

1.12.2 Accident Reports

a. Conduct an accident investigation for recordable injuries and illnesses, for Medical Treatment defined in paragraph DEFINITIONS, property damage accidents resulting in at least $20,000 in damages, and near misses as defined in EM 385-1-1, to establish the root cause(s) of the accident. Complete the applicable NAVFAC Contractor Incident Reporting System (CIRS), and electronically submit via the NAVFAC Enterprise Safety Applications Management System (ESAMS). The Contracting Officer will provide copies of any required or special forms.

b. Near Misses: Complete the applicable documentation in NAVFAC Contractor Incident Reporting System (CIRS), and electronically submit via the NAVFAC Enterprise Safety Applications Management System (ESAMS).

c. Conduct an accident investigation for any weight handling equipment accident (including rigging gear accidents) to establish the root cause(s) of the accident, complete the WHE Accident Report (Crane and Rigging Gear) form and provide the report to the Contracting Officer within 30 calendar days of the accident. Do not proceed with crane operations until cause is determined and corrective actions have been implemented to the satisfaction of the Contracting Officer. The Contracting Officer will provide a blank copy of the accident report form.

1.12.3 Crane Reports

Submit crane inspection reports required in accordance with USACE EM 385-1-1, Appendix I and as specified herein (Refer to ATTACHMENT "A"- "CONTRACTOR CRANE, MULTI-PURPOSE MACHINE, FORKLIFT, CONSTRUCTION EQUIPMENT, AND RIGGING GEAR REQUIREMENTS") with Daily Reports of Inspections.

1.12.4 Certificate of Compliance

Provide a Certificate of Compliance for each crane entering the Portsmouth Naval Shipyard under this contract (see Contracting Officer for a blank certificate). State within the certificate that the crane and rigging gear meet applicable OSHA regulations (with the Contractor citing which OSHA regulations are applicable, e.g., cranes used in construction, demolition, or maintenance comply with 29 CFR 1926 and USACE EM 385-1-1 Section 16 and Appendix I. Certify on the Certificate of Compliance that the crane operator(s) is qualified and trained in the operation of the crane to be used. Also certify that all of its crane operators working on the Portsmouth Naval Shipyard have been trained in the proper use of all safety devices (e.g., anti-two block devices). Post certifications on the crane.

1.13 HOT WORK

Submit and obtain a written permit prior to performing "Hot Work" (welding, cutting, etc.) or operating other flame-producing/spark producing devices, from the Portsmouth Naval Shipyard Fire Department. A permit is required from the Explosives Safety Office for work in and around where explosives are processed, stored, or handled. CONTRACTORS ARE REQUIRED TO MEET ALL CRITERIA BEFORE A PERMIT IS ISSUED. Provide at least one (1) 2A:20 BC rated extinguishers for normal "Hot Work". All extinguishers shall be current inspection tagged, approved safety pin and tamper resistant seal. It is also mandatory to have a designated FIRE WATCH for any "Hot Work" done at Portsmouth Naval Shipyard. The Fire Watch shall be trained in accordance with NFPA 51B and remain on-site for a minimum of 60 minutes after completion of the task or as specified on the hot work permit. Separate hot work permits will be issued for any Hot Asphalt roofing kettle.

When starting work in the facility, require personnel to familiarize themselves with the location of the nearest fire alarm boxes and place in memory the emergency Portsmouth Naval Shipyard Fire Department phone number. ANY FIRE, NO MATTER HOW SMALL, SHALL BE REPORTED TO THE PORTSMOUTH NAVAL SHIPYARD FIRE DEPARTMENT AND THE CONTRACTING OFFICER IMMEDIATELY.

Obtain services from a NFPA Certified Marine Chemist for "HOT WORK" within or around flammable materials (such as fuel systems, welding/cutting on fuel pipes) or confined spaces (such as sewer wet wells, manholes, vaults, etc.) that have the potential for flammable or explosive atmospheres.

1.14 RADIATION SAFETY REQUIREMENTS

License Certificates and other applicable information for radiation materials and equipment shall be submitted to the Contracting Officer and Radiation Safety Office (RSO), and Contracting Oversight Technician (COT) for all specialized and licensed material and equipment that could cause fatal harm to construction personnel or to the construction project.

Complete list of requirements are available on the PWD Maine's Web site or available for the COTS representative.

https://portal.navfac.navy.mil/portal/page/portal/navfac/navfac_ww_pp/navfac_navfacmidlant_pp/pwbl/maine/construction:general%20contractor%20information:tab3

Workers shall be protected from radiation exposure in accordance with 10 CFR 20, Standards for Protection against Radiation.

Loss of radioactive material shall be reported immediately to the Contracting Officer.

Actual exposure of the radiographic film or un-shielding the source shall not be initiated until after 5 p.m. on weekdays.

In instances where radiography is scheduled near or adjacent to buildings or areas having limited access or one-way doors, no assumptions shall be made as to building occupancy. Where necessary, the Contracting Officer will direct the Contractor to conduct an actual building entry, search, and alert. Where removal of personnel from such a building cannot be accomplished and it is otherwise safe to proceed with the radiography, a fully instructed employee shall be positioned inside such building or area to prevent exiting while external radiographic operations are in process. Transportation of Regulated Amounts of Radioactive Material will comply with 49 CFR, Subchapter C, Hazardous Material Regulations. Local Fire authorities and the site Radiation Safety Officer (RSO) shall be notified of any Radioactive Material use.

Transmitter Requirements: The Portsmouth Naval Shipyard policy concerning the use of transmitters such as radios, cell phones, etc., must be adhered to by all Contractor personnel. They must also obey Emissions Control (EMCON) restrictions.

1.15 FACILITY OCCUPANCY CLOSURE

Streets, walks, and other facilities occupied and used by the Government shall not be closed or obstructed without written permission from the Contracting Officer.

1.16 SEVERE STORM PLAN

In the event of a severe storm warning, the Contractor must:

a. Secure outside equipment and materials and place materials that could be damaged in protected areas.

b. Check surrounding area, including roof, for loose material, equipment, debris, and other objects that could be blown away or against existing facilities.

c. Ensure that temporary erosion controls are adequate.

d. Comply with requirements as per EM-385 1-1 Section 06.I INCLEMENT WEATHER. Contracting Officer will notify Contractor of COR (Condition of Readiness level 1-5) for severe storms.

1.17 CONFINED SPACE ENTRY REQUIREMENTS.

Contractors entering and working in confined spaces while performing general industry work are required to follow the requirements of OSHA 29 CFR 1926 and comply with the requirements in Section 34 of EM 385-1-1

and OSHA 29 CFR 1910.146. Contractors entering and working in confined spaces while performing shipyard industry work are required to follow the requirements of OSHA 29 CFR 1915 Subpart B.

PART 2 PRODUCTS

2.1 CONFINED SPACE SIGNAGE

Provide permanent signs integral to or securely attached to access covers for new permit-required confined spaces. Signs wording: "DANGER--PERMIT-REQUIRED CONFINED SPACE - DO NOT ENTER -" in bold letters a minimum of one inch in height and constructed to be clearly legible with all paint removed. The signal word "DANGER" shall be red and readable from 5 feet.

PART 3 EXECUTIONS

3.1 CONSTRUCTION AND/OR OTHER WORK

Comply with USACE EM 385-1-1, NFPA 70, NFPA 70E, NFPA 241, the APP, the AHA, Federal and State OSHA regulations, and other related submittals and Portsmouth Naval Shipyard's fire and safety regulations. The most stringent standard prevails.

PPE is governed in all areas by the nature of the work the employee is performing. Use personal hearing protection at all times in designated noise hazardous areas or when performing noise hazardous tasks. Safety glasses must be carried/available on each person.

Mandatory PPE includes:

a. Hard Hat

b. Appropriate Safety Shoes

c. Reflective Vests

3.1.1 Hazardous Material Use

Each hazardous material must receive approval from the Contracting Officer or their designated representative prior to being brought onto the job site or prior to any other use in connection with this contract. Allow a minimum of 10 working days for processing of the request for use of a hazardous material.

3.1.2 Hazardous Material Exclusions

Notwithstanding any other hazardous material used in this contract, radioactive materials or instruments capable of producing ionizing/non-ionizing radiation (with the exception of radioactive material and devices used in accordance with USACE EM 385-1-1 such as nuclear density meters for compaction testing and laboratory equipment with radioactive sources) as well as materials which contain asbestos, mercury or polychlorinated biphenyls, di-isocynates, lead-based paint are prohibited. The Contracting Officer, upon written request by the Contractor, may consider exceptions to the use of any of the above excluded materials. Low mercury lamps used within fluorescent lighting fixtures are allowed as an exception without further Contracting Officer approval. Notify the Radiation Safety Officer (RSO) prior to excepted items of

radioactive material and devices being brought on Portsmouth Naval Shipyard.

3.1.3 Unforeseen Hazardous Material

The design should have identified materials such as PCB, lead paint, dust that could potentially be hazardous, and friable and non-friable asbestos and other OSHA regulated chemicals (i.e., 29 CFR Part 1910.1000). If additional material, not indicated, that may be hazardous to human health upon disturbance during construction operations is encountered, stop that portion of work and notify the Contracting Officer immediately. Within 14 calendar days the Government will determine if the material is hazardous. If material is not hazardous or poses no danger, the Government will direct the Contractor to proceed without change. If material is hazardous and handling of the material is necessary to accomplish the work, the Government will issue a modification pursuant to "FAR 52.243-4, Changes" and "FAR 52.236-2, Differing Site Conditions."

3.2 PRE-OUTAGE COORDINATION MEETING

Apply for utility outages at least 15 calendar days in advance. As a minimum, the request should include the location of the outage, utilities being affected, duration of outage and any necessary sketches. Special requirements for electrical outage requests are contained elsewhere in this specification section. Once approved, and prior to beginning work on the utility system requiring shut down, attend a pre-outage coordination meeting with the Contracting Officer to review the scope of work and the lock-out/tag-out procedures for worker protection. No work will be performed on energized electrical circuits unless proof is provided that no other means exist and Contracting Officer written approval is obtained.

3.3 CONTROL OF HAZARDOUS ENERGY (LOCKOUT/TAGOUT)

Ensure that each employee is familiar with and complies with these procedures and USACE EM 385-1-1, Section 12, Control of Hazardous Energy and 29 CFR 1910.147.

Contracting Officer will, at the Contractor's request, apply lockout/tag-out tags and take other actions that, because of experience and knowledge, are known to be necessary to make the particular equipment safe to work on.

No person, regardless of position or authority, shall operate any switch, valve, or equipment that has an official lockout/tag-out tag attached to it, nor shall such tag be removed except as provided in this section.

No person shall work on any equipment that requires a lockout/tag-out tag unless he, his immediate supervisor, project leader, or a subordinate has in his possession the stubs of the required lockout/tag-out tags.

When work is to be performed on electrical circuits, only qualified personnel shall perform work on electrical circuits.

A supervisor who is required to enter an area protected by a lockout/tag-out tag will be considered a member of the protected group provided he notifies the holder of the tag stub each time he enters and departs from the protected area.

Shipyard and NAVFAC Personnel use a red lock and a red tag to indicate personnel are working on the systems. Use of a red lock and a red tag is

highly encouraged to maintain continuity throughout the installation. The use of another colored locks and tags (blue for Shipyard workers and Yellow for NAVFAC personnel) indicate that the system is out of service for some reason.

Identification markings on building light and power distribution circuits shall not be relied on for established safe work conditions.

Before clearance will be given on any equipment other than electrical (generally referred to as mechanical apparatus), the apparatus, valves, or systems shall be secured in a passive condition with the appropriate vents, pins, and locks.

Pressurized or vacuum systems shall be vented to relieve differential pressure completely.

Vent valves shall be tagged open during the course of the work.(PNSY)

Where dangerous gas or fluid systems are involved, or in areas where the environment may be oxygen deficient, system or areas shall be purged, ventilated, or otherwise made safe prior to entry.

3.3.1 Tag Placement(PNSY)

Lockout/tag-out tags shall be completed in accordance with the regulations printed on the back thereof and attached to any device which, if operated, could cause an unsafe condition to exist.

If more than one group is to work on any circuit or equipment, the employee in charge of each group shall have a separate set of lockout/tag-out tags completed and properly attached.

When it is required that certain equipment be tagged, the Government will review the characteristics of the various systems involved that affect the safety of the operations and the work to be done; take the necessary actions, including voltage and pressure checks, grounding, and venting, to make the system and equipment safe to work on; and apply such lockout/tag-out tags to those switches, valves, vents, or other mechanical devices needed to preserve the safety provided. This operation is referred to as "Providing Safety Clearance."

3.3.2 Tag Removal (PNSY)

When any individual or group has completed its part of the work and is clear of the circuits or equipment, the supervisor, project leader, or individual for whom the equipment was tagged shall turn in his signed lockout/tag-out tag stub to the Contracting Officer. That group's or individual's lockout/tag-out tags on equipment may then be removed on authorization by the Contracting Officer.

3.4 FALL HAZARD PROTECTION AND PREVENTION PROGRAM

Establish a fall protection and prevention program, for the protection of all employees exposed to fall hazards. Within the program include company policy, identify responsibilities, education and training requirements, fall hazard identification, prevention and control measures, inspection, storage, care and maintenance of fall protection equipment and rescue and evacuation procedures.

3.4.1 Training

Institute a fall protection training program. As part of the Fall Hazard Protection and Prevention Program, provide training for each employee who might be exposed to fall hazards. Provide training by a competent person for fall protection in accordance with USACE EM 385-1-1, Section 21.B.

3.4.2 Fall Protection Equipment and Systems

Enforce use of the fall protection equipment and systems designated for each specific work activity in the Fall Protection and Prevention Plan and/or AHA at all times when an employee is exposed to a fall hazard. Protect employees from fall hazards as specified in EM 385-1-1, Section 21. In addition to the required fall protection systems, safety skiff, personal floatation devices, life rings etc., are required when working above or next to water in accordance with USACE EM 385-1-1, Paragraphs 21.N through 21.N.04. Personal fall arrest systems are required when working from an articulating or extendible boom, swing stages, or suspended platform. In addition, personal fall arrest systems are required when operating other equipment such as scissor lifts if the work platform is capable of being positioned outside the wheelbase. The need for tying-off in such equipment is to prevent ejection of the employee from the equipment during raising, lowering, or travel. Fall protection must comply with 29 CFR 1926.500, Subpart M, USACE EM 385-1-1 and ASSE/SAFE A10.32.

3.4.2.1 Personal Fall Arrest Equipment

Personal fall arrest equipment, systems, subsystems, and components shall meet ASSE/SAFE Z359.1. Only a full-body harness with a shock-absorbing lanyard or self-retracting lanyard is an acceptable personal fall arrest body support device. Body belts may only be used as a positioning device system (for uses such as steel reinforcing assembly and in addition to an approved fall arrest system). Harnesses shall have a fall arrest attachment affixed to the body support (usually a Dorsal D-ring) and specifically designated for attachment to the rest of the system. Only locking snap hooks and carabineers shall be used. Webbing, straps, and ropes shall be made of synthetic fiber. The maximum free fall distance when using fall arrest equipment shall not exceed 6 feet. The total fall distance and any swinging of the worker (pendulum-like motion) that can occur during a fall shall always be taken into consideration when attaching a person to a fall arrest system.

3.4.3 Existing Anchorage

Certified (or re-certified) by a qualified person for fall protection existing anchorages, to be used for attachment of personal fall arrest equipment in accordance with ASSE/SAFE Z359.1. Existing horizontal lifeline anchorages must be certified (or re-certified) by a registered professional engineer with experience in designing fall arrest anchorage systems.

3.4.4 Horizontal Lifelines

Design, install, certify and use under the supervision of a qualified person horizontal lifelines for fall protection as part of a complete fall arrest system which maintains a safety factor of 2 (29 CFR 1926.500).

3.4.5 Guardrails and Safety Nets

Design, install and use guardrails and safety nets in accordance with EM 385-1-1 and 29 CFR 1926 Subpart M.

3.4.6 Rescue and Evacuation Procedures

When personal fall arrest systems are used, ensure that the mishap victim can self-rescue or can be rescued promptly should a fall occur. Prepare a Rescue and Evacuation Plan and include a detailed discussion of the following: methods of rescue; methods of self-rescue; equipment used; training requirement; specialized training for the rescuers; procedures for requesting rescue and medical assistance; and transportation routes to a medical facility. Include the Rescue and Evacuation Plan within the Activity Hazard Analysis (AHA) for the phase of work, in the Fall Protection and Prevention (FP&P) Plan, and the Accident Prevention Plan (APP).

3.5 SHIPYARD REQUIREMENTS

All personnel who enter the Controlled Industrial Area (CIA) of Portsmouth Naval Shipyard shall wear mandatory personal protective equipment (PPE) at all times and comply with PPE postings of shops both inside and outside the CIA.

3.6 SCAFFOLDING

Provide employees with a safe means of access to the work area on the scaffold. A scaffolding competent person shall be present observing erecting, moving, altering, or dismantling any scaffold. Climbing of any scaffold braces or supports not specifically designed for access is prohibited. Access scaffold platforms greater than 20 feet maximum in height by use of a scaffold stair system. Do not use vertical ladders commonly provided by scaffold system manufacturers for accessing scaffold platforms greater than 20 feet maximum in height. The use of an adequate gate is required. Ensure that employees are qualified to perform scaffold erection and dismantling. Do not use scaffold without the capability of supporting at least four times the maximum intended load or without appropriate fall protection as delineated in the accepted fall protection and prevention plan. Stationary scaffolds must be attached to structural building components to safeguard against tipping forward or backward. Give special care to ensure scaffold systems are not overloaded. Side brackets used to extend scaffold platforms on self-supported scaffold systems for the storage of material are prohibited. The first tie-in shall be at the height equal to 4 times the width of the smallest dimension of the scaffold base. Place work platforms on mud sills. Scaffold or work platform erectors shall have fall protection during the erection and dismantling of scaffolding or work platforms that are more than six feet in height. Delineate fall protection requirements when working above six feet or above dangerous operations in the Fall Protection and Prevention (FP&P) Plan and Activity Hazard Analysis (AHA) for the phase of work.

3.6.1 Stilts

The use of stilts for gaining additional height in construction, renovation, repair or maintenance work is prohibited.

3.7 EQUIPMENT

3.7.1 Material Handling Equipment

a. Material handling equipment such as forklifts shall not be modified with work platform attachments for supporting employees unless specifically delineated in the manufacturer's printed operating instructions.

b. The use of hooks on equipment for lifting of material must be in accordance with manufacturer's printed instructions. Additionally, when material handling equipment is used as a crane it must meet NAVFAC P-307 requirements in paragraphs entitled "Contractor Operated Cranes," an "Investigation and Reporting of Crane and Rigging Gear Accidents."

c. Operators of forklifts or power industrial trucks shall be licensed in accordance with OSHA.

3.7.2 Weight Handling Equipment

a. Equip cranes and derricks as specified in EM 385-1-1, Section 16.

b. Notify the Contracting Officer 15 days in advance of any cranes entering the Portsmouth Naval Shipyard so that necessary quality assurance spot checks can be coordinated. Contractor's operator shall remain with the crane during the spot check. (Refer to ATTACHMENT "A" - "CONTRACTOR CRANE, MULTI-PURPOSE MACHINE, FORKLIFT, CONSTRUCTION EQUIPMENT, AND RIGGING GEAR REQUIREMENTS.")

c. Comply with the crane manufacturer's specifications and limitations for erection and operation of cranes and hoists used in support of the work. Perform erection under the supervision of a designated person (as defined in ASME B30.5). Perform all testing in accordance with the manufacturer's recommended procedures.

d. Comply with ASME B30.5 for mobile and locomotive cranes, ASME B30.22 for articulating boom cranes, ASME B30.3 for construction tower cranes, and ASME B30.8 for floating cranes and floating derricks.

e. Under no circumstance shall a Contractor make a lift at or above 90 percent of the cranes rated capacity in any configuration.

f. When operating in the vicinity of overhead transmission lines, operators and riggers shall be alert to this special hazard and follow the requirements of USACE EM 385-1-1 section 11 and ASME B30.5 or ASME B30.22 as applicable.

g. Do not crane suspended personnel work platforms (baskets) unless the Contractor proves that using any other access to the work location would provide a greater hazard to the workers or is impossible. Do not lift personnel with a line hoist or friction crane.

h. Inspect, maintain, and recharge portable fire extinguishers as specified in NFPA 10, Standard for Portable Fire Extinguishers.

i. All employees must keep clear of loads about to be lifted and of suspended loads.

j. Use cribbing when performing lifts on outriggers.

k. The crane hook/block must be positioned directly over the load. Side loading of the crane is prohibited.

l. A physical barricade must be positioned to prevent personnel from entering the counterweight swing (tail swing) area of the crane.

m. Certification records which include the date of inspection, signature of the person performing the inspection, and the serial number or other identifier of the crane that was inspected shall always be available for review by Contracting Officer personnel.

n. Written reports listing the load test procedures used along with any repairs or alterations performed on the crane shall be available for review by Contracting Officer personnel.

o. Certify that all crane operators have been trained in proper use of all safety devices (e.g. anti-two block devices).

p. Take steps to ensure that wind speed does not contribute to loss of control of the load during lifting operations. Prior to conducting lifting operations set a maximum wind speed at which a crane can be safely operated based on the equipment being used, the load being lifted, experience of operators and riggers, and hazards on the work site. This maximum wind speed determination shall be included as part of the activity hazard analysis plan for that operation.

3.7.3 Equipment and Mechanized Equipment

a. Proof of qualifications for operator shall be kept on the project site for review.

b. Manufacture specifications or owner's manual for the equipment shall be on-site and reviewed for additional safety precautions or requirements that are sometimes not identified by OSHA or USACE EM 385-1-1. Incorporate such additional safety precautions or requirements into the AHAs.

3.7.4 USE OF EXPLOSIVES

Use of Explosives is not allowed on Portsmouth Naval Shipyard.

3.8 EXCAVATIONS

Perform soil classification by a competent person in accordance with 29 CFR 1926 and EM 385-1-1.

a. Trenching Machinery:

Operate trenching machines with digging chain drives only when the spotters/laborers are in plain view of the operator. Provide operator and spotters/laborers training on the hazards of the digging chain drives with emphasis on the distance that needs to be maintained when the digging chain is operating. Keep documentation of the training on file at the project site.

b. Shoring Systems:

Trench and shoring systems must be identified in the accepted safety plan and AHA. Manufacture tabulated data and specifications or registered engineer tabulated data for shoring or benching systems shall be readily available on-site for review. Job-made shoring or shielding must have the registered professional engineer stamp, specifications, and tabulated data. Extreme care must be used when excavating near direct burial electric underground cables.

3.8.1 Utility Locations

All underground utilities in the work area must be positively identified by a third party, independent, private utility locating company (cannot be the Government's locating company) [in addition to any Portsmouth Naval Shipyard location service and coordinated with the Portsmouth Naval Shipyard utility department].

For work completed at the Portsmouth Naval Shipyard, See Attachment B - "PORTSMOUTH NAVAL SHIPYARD UTILITY LOCATING PROCEDURES."

3.8.2 Utility Location Verification

Physically verify underground utility locations, including utility depth, by hand digging using wood or fiberglass handled tools when any adjacent construction work is expected to come within three feet of the underground system.

3.8.3 Utilities Within and Under Concrete Slabs, Bituminous Asphalt and Other Impervious Surfaces

Utilities located within and under concrete slabs or pier structures, bridges, parking areas, and the like, are extremely difficult to identify. Whenever contract work involves chipping, saw cutting, or core drilling through concrete, bituminous asphalt or other impervious surfaces, the existing utility location must be coordinated with station utility departments in addition to location and depth verification by a third party, independent, private locating company. The third party, independent, private locating company shall locate utility depth by use of Ground Penetrating Radar (GPR), bore scope, or ultrasound prior to the start of demolition and construction. Outages to isolate utility systems must be used in circumstances where utilities are unable to be positively identified. The use of historical drawings does not alleviate the Contractor from meeting this requirement. Any markings made during the utility investigation must be maintained throughout the contract.

3.9 ELECTRICAL

3.9.1 Conduct of Electrical Work

Underground electrical spaces must be certified safe for entry before entering to conduct work. Cables that will be cut must be positively identified and de-energized prior to performing each cut. Positive cable identification must be made prior to submitting any outage request for electrical systems. Arrangements are to be coordinated with the Contracting Officer and Portsmouth Naval Shipyard Utilities for identification. The Contracting Officer will not accept an outage request until the Contractor satisfactorily documents that the circuits have been clearly identified. Perform all high voltage cable cutting remotely using hydraulic cutting tool. When racking in or live switching of circuit breakers, no additional person other than the switch operator will be

allowed in the space during the actual operation. Plan so that work near energized parts is minimized to the fullest extent possible. Use of electrical outages clear of any energized electrical sources is the preferred method. When working in energized substations, only qualified electrical workers will be permitted to enter. When work requires Contractor to work near energized circuits as defined by the NFPA 70, high voltage personnel must use personal protective equipment that includes, as a minimum, electrical hard hat, safety shoes, insulating gloves with leather protective sleeves, fire retarding shirts, coveralls, face shields, and safety glasses. In addition, provide electrical arc flash protection for personnel as required by NFPA 70E. Insulating blankets, hearing protection, and switching suits may also be required, depending on the specific job and as delineated in the Contractor's AHA.

3.9.2 Portable Extension Cords

Size portable extension cords in accordance with manufacturer ratings for the tool to be powered and protected from damage. Immediately remove from service all damaged extension cords. Portable extension cords shall meet the requirements of EM 385-1-1, NFPA 70E, and OSHA electrical standards.

3.10 WORK IN CONFINED SPACES

Comply with the requirements in Section 34 of USACE EM 385-1-1, OSHA 29 CFR 1910, OSHA 29 CFR 1910.146, OSHA Directive CPL 2.100 and OSHA 29 CFR 1926. Any potential for a hazard in the confined space requires a permit system to be used.

a. Entry Procedures. Prohibit entry into a confined space by personnel for any purpose, including hot work, until the qualified person has conducted appropriate tests to ensure the confined or enclosed space is safe for the work intended and that all potential hazards are controlled or eliminated and documented. (See Section 34 of USACE EM 385-1-1 for entry procedures.) All hazards pertaining to the space shall be reviewed with each employee during review of the AHA.

b. Forced air ventilation is required for all confined space entry operations and the minimum air exchange requirements must be maintained to ensure exposure to any hazardous atmosphere is kept below its' action level.

c. Sewer wet wells require continuous atmospheric monitoring with audible alarms for oxygen, a flammable gas (methane preferably), hydrogen sulfide and carbon monoxide.

-- End of Section --

SECTION 01 42 00

SOURCES FOR REFERENCE PUBLICATIONS
11/14

PART 1 GENERAL

1.1 REFERENCES

Various publications are referenced in other sections of the specifications to establish requirements for the work. These references are identified in each section by document number, date and title. The document number used in the citation is the number assigned by the standards producing organization (e.g. ASTM B564 Standard Specification for Nickel Alloy Forgings). However, when the standards producing organization has not assigned a number to a document, an identifying number has been assigned for reference purposes.

1.2 ORDERING INFORMATION

The addresses of the standards publishing organizations whose documents are referenced in other sections of these specifications are listed below, and if the source of the publications is different from the address of the sponsoring organization, that information is also provided. Documents listed in the specifications with numbers which were not assigned by the standards producing organization should be ordered from the source by title rather than by number.

AMERICAN SOCIETY OF SAFETY ENGINEERS (ASSE/SAFE)
1800 East Oakton Street
Des Plaines, IL 60018
Ph: 847-699-2929
Internet: http://www.asse.org

ASME INTERNATIONAL (ASME)
Two Park Avenue, M/S 10E
New York, NY 10016-5990
Ph: 800-843-2763
Fax: 973-882-1717
E-mail: customercare@asme.org
Internet: http://www.asme.org

ASTM INTERNATIONAL (ASTM)
100 Barr Harbor Drive, P.O. Box C700
West Conshohocken, PA 19428-2959
Ph: 877-909-2786
Internet: http://www.astm.org

GREEN SEAL (GS)
1001 Connecticut Avenue, NW
Suite 827
Washington, DC 20036-5525
Ph: 202-872-6400
Fax: 202-872-4324
Internet: http://www.greenseal.org

INSTITUTE OF ELECTRICAL AND ELECTRONICS ENGINEERS (IEEE)
445 and 501 Hoes Lane
Piscataway, NJ 08854-4141
Ph: 732-981-0060 or 800-701-4333
Fax: 732-562-9667
E-mail: onlinesupport@ieee.org
Internet: http://www.ieee.org

NATIONAL ELECTRICAL MANUFACTURERS ASSOCIATION (NEMA)
1300 North 17th Street, Suite 900
Arlington, VA 22209
Ph: 703-841-3200
Internet: http://www.nema.org/

NATIONAL FIRE PROTECTION ASSOCIATION (NFPA)
1 Batterymarch Park
Quincy, MA 02169-7471
Ph: 617-770-3000
Fax: 617-770-0700
Internet: http://www.nfpa.org

SHEET METAL AND AIR CONDITIONING CONTRACTORS' NATIONAL ASSOCIATION (SMACNA)
4201 Lafayette Center Drive
Chantilly, VA 20151-1219
Ph: 703-803-2980
Fax: 703-803-3732
Internet: http://www.smacna.org

U.S. ARMY CORPS OF ENGINEERS (USACE)
CRD-C DOCUMENTS available on Internet:
http://www.wbdg.org/ccb/browse_cat.php?c=68
Order Other Documents from:
USACE Publications Depot
Attn: CEHEC-IM-PD
2803 52nd Avenue
Hyattsville, MD 20781-1102
Ph: 301-394-0081
Fax: 301-394-0084
E-mail: pubs-army@usace.army.mil
Internet: http://www.publications.usace.army.mil/
or
http://www.hnc.usace.army.mil/Missions/Engineering/TECHINFO.aspx

U.S. DEPARTMENT OF DEFENSE (DOD)
Order DOD Documents from:
Room 3A750-The Pentagon
1400 Defense Pentagon
Washington, DC 20301-1400
Ph: 703-571-3343
FAX: 215-697-1462
E-mail: customerservice@ntis.gov
Internet: http://www.ntis.gov
Obtain Military Specifications, Standards and Related Publications from:
Acquisition Streamlining and Standardization Information System (ASSIST)
Department of Defense Single Stock Point (DODSSP)
Document Automation and Production Service (DAPS)

Building 4/D
700 Robbins Avenue
Philadelphia, PA 19111-5094
Ph: 215-697-6396 - for account/password issues
Internet: http://assist.daps.dla.mil/online/start/; account registration required
Obtain Unified Facilities Criteria (UFC) from:
Whole Building Design Guide (WBDG)
National Institute of Building Sciences (NIBS)
1090 Vermont Avenue NW, Suite 700
Washington, CD 20005
Ph: 202-289-7800
Fax: 202-289-1092
Internet: http://www.wbdg.org/references/docs_refs.php

U.S. FEDERAL AVIATION ADMINISTRATION (FAA)
Order for sale documents from:
Superintendent of Documents
U.S. Government Printing Office (GPO)
710 North Capitol Street, NW
Washington, DC 20401
Ph: 202-512-1800
Fax: 202-512-2104
E-mail: contactcenter@gpo.gov
Internet: http://www.gpoaccess.gov
Order free documents from:
Federal Aviation Administration
Department of Transportation
800 Independence Avenue, SW
Washington, DC 20591
Ph: 1-866-835-5322
Internet: http://www.faa.gov

U.S. NATIONAL ARCHIVES AND RECORDS ADMINISTRATION (NARA)
8601 Adelphi Road
College Park, MD 20740-6001
Ph: 866-272-6272
Fax: 301-837-0483
Internet: http://www.archives.gov
Order documents from:
Superintendent of Documents
U.S.Government Printing Office (GPO)
710 North Capitol Street, NW
Washington, DC 20401
Ph: 202-512-1800
Fax: 202-512-2104
E-mail: contactcenter@gpo.gov
Internet: http://www.gpoaccess.gov

U.S. NAVAL FACILITIES ENGINEERING COMMAND (NAVFAC)
1322 Patterson Ave. SE, Suite 1000
Washington Navy Yard, DC 20374-5065
Ph: 202-685-9387
Internet: http://www.navfac.navy.mil

UNDERWRITERS LABORATORIES (UL)
2600 N.W. Lake Road
Camas, WA 98607-8542
Ph: 877-854-3577

E-mail: CEC.us@us.ul.com
Internet: http://www.ul.com/
UL Directories available through IHS at http://www.ihs.com

PART 2 PRODUCTS

Not used

PART 3 EXECUTION

Not used

-- End of Section --

SECTION 01 45 00.00 20

QUALITY CONTROL (PWD ME)
07/15

PART 1 GENERAL

1.1 REFERENCES

The publications listed below form a part of this specification to the extent referenced. The publications are referred to in the text by the basic designation only.

ASTM INTERNATIONAL (ASTM)

ASTM D6245	(2012) Using Indoor Carbon Dioxide Concentrations to Evaluate Indoor Air Quality and Ventilation
ASTM D6345	(2010) Selection of Methods for Active, Integrative Sampling of Volatile Organic Compounds in Air

SHEET METAL AND AIR CONDITIONING CONTRACTORS' NATIONAL ASSOCIATION (SMACNA)

ANSI/SMACNA 008	(2007) IAQ Guidelines for Occupied Buildings Under Construction, 2nd Edition

U.S. ARMY CORPS OF ENGINEERS (USACE)

EM 385-1-1	(2014) Safety and Health Requirements Manual

1.2 SUBMITTALS

Government approval is required for submittals with a "G" designation; submittals not having a "G" designation are for Contractor Quality Control approval. Submit the following in accordance with Section 01 33 00 SUBMITTAL PROCEDURES:

SD-01 Preconstruction Submittals

Construction Quality Control (QC) Plan; G

Submit a Construction QC Plan prior to start of construction.

Indoor Air Quality (IAQ) Management Plan; G

Basis of Design and Design Intent

QC Manager Qualifications; G

[QC Specialists Qualifications; G]

SD-05 Design Data

Design Review

SD-07 Certificates

1.3 INFORMATION FOR THE CONTRACTING OFFICER

Prior to commencing work on construction, the Contractor can obtain a single copy set of the current report forms from the Contracting Officer. The report forms will consist of the Contractor Production Report, Contractor Production Report (Continuation Sheet), Contractor Quality Control (CQC) Report, (CQC) Report (Continuation Sheet), Preparatory Phase Checklist, Initial Phase Checklist, Rework Items List, and Testing Plan and Log.

Deliver the following to the Contracting Officer during Construction:

a. CQC Report: Mail or hand-carry the original (wet signatures) and one copy by 10:00 AM the next working day after each day that work is performed and for every seven consecutive calendar days of no-work.

b. Contractor Production Report: Submit the report electronically by 10:00 AM the next working day after each day that work is performed and for every seven consecutive calendar days of no-work.

c. Preparatory Phase Checklist: Submit the report electronically in the same manner as the CQC Report for each Preparatory Phase held.

d. Initial Phase Checklist: Submit the report electronically in the same manner as the CQC Report for each Initial Phase held.

e. QC Specialist Reports: Submit the report electronically by 10:00 AM the next working day after each day that work is performed.

f. Field Test Reports: Mail or hand-carry the original within two working days after the test is performed, attached to the original CQC Report and one copy attached to each QC Report copy.

g. Monthly Summary Report of Tests: Submit the report as an electronic attachment to the CQC Report at the end of each month.

h. Testing Plan and Log: Submit the report as an electronic attachment to the CQC Report, at the end of each month. A copy of the final Testing Plan and Log shall be provided to the OMSI / eOMSI preparer for inclusion into the eOMSI documentation.

i. Rework Items List: Submit lists containing new entries daily, in the same manner as the CQC Report.

j. CQC Meeting Minutes: Within two working days after the meeting is held, submit the report as an electronic attachment to the CQC Report.

k. QC Certifications: As required by the paragraph entitled "QC Certifications."

1.4 QC PROGRAM REQUIREMENTS

Establish and maintain a QC program as described in this section. This QC program is a key element in meeting the objectives of NAVFAC Commissioning. The QC program consists of a QC Organization, QC Plan, QC Plan Meeting(s), a Coordination and Mutual Understanding Meeting, QC meetings, three phases of control, submittal review and approval, testing, completion inspections, and QC certifications and documentation necessary to provide materials, equipment, workmanship, fabrication, construction and operations which comply with the requirements of this Contract. The QC program must cover on-site and off-site work and be keyed to the work sequence. No construction work or testing may be performed unless the QC Manager is on the work site. The QC Manager must report to an officer of the firm and not be subordinate to the Project Superintendent or the Project Manager. The QC Manager, Project Superintendent and Project Manager must work together effectively. Although the QC Manager is the primary individual responsible for quality control, all individuals will be held responsible for the quality of work on the job.

1.4.1 Preliminary Construction Work Authorized Prior to Acceptance

The only construction work that is authorized to proceed prior to the acceptance of the QC Plan is mobilization of storage and office trailers, temporary utilities, and surveying.

1.4.2 Notification of Changes

Notify the Contracting Officer, in writing, of any proposed changes in the QC Plan or changes to the QC organization personnel, a minimum of 10 work days prior to a proposed change. Proposed changes are subject to acceptance by the Contracting Officer.

1.5 QC ORGANIZATION

1.5.1 QC Manager

1.5.1.1 Duties

Provide a QC Manager at the work site to implement and manage the QC program. In addition to implementing and managing the QC program, the QC Manager may perform the duties of SSHO. The QC Manager shall not perform the duties of Project Superintendent nor the duties of Project Manager. The QC Manager is required to attend the partnering meetings, QC Plan Meetings, Coordination and Mutual Understanding Meeting, conduct the QC meetings, perform the three phases of control, except for those phases of control designated to be performed by QC Specialists, perform submittal review and approval, ensure testing is performed and provide QC certifications and documentation required in this Contract. The QC Manager is responsible for managing and coordinating the three phases of control and any other inspection and testing personnel required by this Contract. The QC Manager is the manager of all QC activities and shall not be the Special Inspector.

1.5.1.2 Qualifications

An individual with a minimum of 10 years combined experience in the following positions: Project Superintendent, QC Manager, Project Manager, Project Engineer or Construction Manager on similar size and type construction contracts which included the major trades that are part of

this Contract. The individual must have at least two years experience as a QC Manager. The individual must be familiar with the requirements of EM 385-1-1, and have experience in the areas of hazard identification, safety compliance, and sustainability.

1.5.1.3 Construction Quality Management Training

In addition to the above experience and education requirements, the QC Manager must have completed the course entitled "Construction Quality Management (CQM) for Contractors." If the QC Manager does not have a current certification, they must obtain the CQM for Contractors course certification within 90 days of award. This course is periodically offered by the Naval Facilities Engineering Command and the Army Corps of Engineers. Contact the Contracting Officer for information on the next scheduled class.

1.5.1.4 Alternate QC Manager Duties and Qualifications

Designate an alternate for the QC Manager at the work site to serve in the event of the designated QC Manager's absence. The period of absence may not exceed two weeks at one time, and not more than 30 workdays during a calendar year. The qualification requirements for the Alternate QC Manager must be the same as for the QC Manager.

1.5.2 QC Specialists Duties and Qualifications

Provide a separate QC Specialist at the work site for each of the areas of responsibilities, specified in Part 3, Execution, of the technical sections, who shall assist and report to the QC Manager and who will have no duties other than their assigned quality control duties. QC Specialists are required to attend the Coordination and Mutual Understanding Meeting, QC meetings and be physically present at the construction site to perform the three phases of control and prepare documentation for each definable feature of work in their area of responsibility. QC Specialists shall not be the special inspector.

1.5.3 Submittal Reviewer Duties and Qualifications

Provide a Submittal Reviewer, other than the QC Manager, qualified in the disciplines being reviewed, to review and certify that the submittals meet the requirements of this Contract prior to certification or approval by the QC Manager.

Each submittal must be reviewed by an individual with 10 years of construction experience.

1.6 QUALITY CONTROL (QC) PLAN

1.6.1 Construction Quality Control (QC) Plan

1.6.1.1 Requirements

Provide, for acceptance by the Contracting Officer, a Construction QC Plan submitted in a three-ring binder that includes a table of contents, with major sections identified with tabs, with pages numbered sequentially, and that documents the proposed methods and responsibilities for accomplishing commissioning activities during the construction of the project:

a. QC ORGANIZATION: A chart showing the QC organizational structure.

b. NAMES AND QUALIFICATIONS: Names and qualifications, in resume format, for each person in the QC organization. Include the CQM for Contractors course certifications for the QC Manager and Alternate QC Manager as required by the paragraphs entitled "Construction Quality Management Training" and "Alternate QC Manager Duties and Qualifications".

c. DUTIES, RESPONSIBILITY AND AUTHORITY OF QC PERSONNEL: Duties, responsibilities, and authorities of each person in the QC organization.

d. OUTSIDE ORGANIZATIONS: A listing of outside organizations, such as architectural and consulting engineering firms, that will be employed by the Contractor and a description of the services these firms will provide. Example: The fire protection engineer who designs the sprinkler system.

e. APPOINTMENT LETTERS: Letters signed by an officer of the firm appointing the QC Manager and Alternate QC Manager and stating that they are responsible for implementing and managing the QC program as described in this Contract. Include in this letter the responsibility of the QC Manager and Alternate QC Manager to implement and manage the three phases of control, and their authority to stop work which is not in compliance with the Contract. Letters of direction are to be issued by the QC Manager to all other QC Specialists outlining their duties, authorities, and responsibilities. Include copies of the letters in the QC Plan.

f. SUBMITTAL PROCEDURES AND INITIAL SUBMITTAL REGISTER: Procedures for reviewing, approving, and managing submittals. Provide the name(s) of the person(s) in the QC organization authorized to review and certify submittals prior to approval. Provide the initial submittal of the Submittal Register as specified in Section 01 33 00 SUBMITTAL PROCEDURES.

g. TESTING LABORATORY INFORMATION: Testing laboratory information required by the paragraphs entitled "Accreditation Requirements", as applicable.

h. TESTING PLAN AND LOG: A Testing Plan and Log that includes the tests required, referenced by the specification paragraph number requiring the test, the frequency, and the person responsible for each test. Use Government forms to log and track tests.

i. PROCEDURES TO COMPLETE REWORK ITEMS: Procedures to identify, record, track, and complete rework items. Use Government forms to record and track rework items.

j. DOCUMENTATION PROCEDURES: Use Government form.

k. LIST OF DEFINABLE FEATURES: A Definable Feature of Work (DFOW) is a task that is separate and distinct from other tasks and has control requirements and work crews unique to that task. A DFOW is identified by different trades or disciplines and is an item or activity on the construction schedule. Include in the list of DFOWs, but not be limited to, all critical path activities on the NAS. Include all activities for which this specification requires QC Specialists or

specialty inspection personnel. Provide separate DFOWs in the Network Analysis Schedule for each design development stage and submittal package.

l. PROCEDURES FOR PERFORMING THE THREE PHASES OF CONTROL: Identify procedures used to ensure the three phases of control to manage the quality on this project. For each DFOW, a Preparatory and Initial phase checklist will be filled out during the Preparatory and Initial phase meetings. Conduct the Preparatory and Initial Phases and meetings with a view towards obtaining quality construction by planning ahead and identifying potential problems for each DFOW.

m. PERSONNEL MATRIX: A personnel matrix showing for each section of the specification who will review and approve submittals, who will perform and document the three phases of control, and who will perform and document the testing.

n. PROCEDURES FOR COMPLETION INSPECTION: Procedures for identifying and documenting the completion inspection process. Include in these procedures the responsible party for punch out inspection, pre-final inspection, and final acceptance inspection.

o. TRAINING PROCEDURES AND TRAINING LOG: Procedures for coordinating and documenting the training of personnel required by the Contract. Include a sample record of training for reporting what systems were included in the training, who provided the training, when and where the training was performed and who attended the training.

p. ORGANIZATION AND PERSONNEL CERTIFICATIONS LOG: Procedures for coordinating, tracking and documenting all certifications on subcontractors, testing laboratories, suppliers, personnel, etc. QC Manager will ensure that certifications are current, appropriate for the work being performed, and will not lapse during any period of the contract that the work is being performed.

q. DAILY REPORT FORM: Template that includes fields for the following:

1) Date.
2) Sequential report number.
3) Weather and temperature.
4) Number of personnel on site by trade or by subcontract.
5) Kind and number of major equipment on site.
6) Tests performed and their results, if known.
7) Materials and equipment delivered to the site and their conditions.
8) Names, affiliations, and positions of visitors to the site with brief explanations of the reasons for visits.
9) Brief description of each work activity, noting items that were completed that day.
10) Items of work that need attention at a later date, and why.
11) Any accidents and injuries.
12) Items of concern with respect to maintenance of quality.
13) Any other items of significance.

1.7 QC PLAN MEETINGS

Prior to submission of the QC Plan, the QC Manager will meet with the Contracting Officer to discuss the QC Plan requirements of this Contract. The purpose of this meeting is to develop a mutual understanding of the QC Plan requirements prior to plan development and submission and to agree on

the Contractor's list of DFOWs.

1.8 COORDINATION AND MUTUAL UNDERSTANDING MEETING

After submission of the QC Plan, and prior to the start of construction, the QC Manager will meet with the Contracting Officer to present the QC program required by this Contract. When a new QC Manager is appointed, the coordination and mutual understanding meeting shall be repeated.

1.8.1 Purpose

The purpose of this meeting is to develop a mutual understanding of the QC details, including documentation, administration for on-site and off-site work, design intent, environmental requirements and procedures, coordination of activities to be performed, and the coordination of the Contractor's management, production, and QC personnel. At the meeting, the Contractor will be required to explain in detail how three phases of control will be implemented for each DFOW, as well as how each DFOW will be affected by each management plan or requirement as listed below:

a. Waste Management Plan.

b. IAQ Management Plan.

c. Procedures for noise and acoustics management.

d. Environmental Protection Plan.

e. Environmental regulatory requirements.

1.8.2 Coordination of Activities

Coordinate activities included in various sections to assure efficient and orderly installation of each component. Coordinate operations included under different sections that are dependent on each other for proper installation and operation. Schedule construction operations with consideration for indoor air quality as specified in the IAQ Management Plan. Coordinate prefunctional tests and startup testing with CxA.

1.8.3 Attendees

As a minimum, the Contractor's personnel required to attend include an officer of the firm, the Project Manager, Project Superintendent, QC Manager, Alternate QC Manager, QC Specialists, A/E, and subcontractor representatives or approved by the Contracting Officer. Each subcontractor who will be assigned QC responsibilities shall have a principal of the firm at the meeting. Minutes of the meeting will be prepared by the QC Manager and signed by the Contractor, the A/E and the Contracting Officer. Provide a copy of the signed minutes to all attendees and shall be included in the QC Plan.

1.9 QC MEETINGS

After the start of construction, conduct weekly QC meetings by the QC Manager at the work site with the Project Superintendent, and the foremen who are performing the work of the DFOWs. The QC Manager shall prepare the minutes of the meeting and provide a copy to the Contracting Officer within two working days after the meeting. The Contracting Officer may attend these meetings. As a minimum, accomplish the following at each meeting:

a. Review the minutes of the previous meeting.

b. Review the schedule and the status of work and rework.

c. Review the status of submittals.

d. Review the work to be accomplished in the next two weeks and documentation required.

e. Resolve QC and production problems (RFI, etc.).

f. Address items that may require revising the QC Plan.

g. Review Accident Prevention Plan (APP).

h. Review environmental requirements and procedures.

i. Review Waste Management Plan.

j. Review IAQ Management Plan.

k. Review Environmental Management Plan.

l. Review the status of training completion.

1.10 DESIGN REVIEW AND DOCUMENTATION

1.10.1 Basis of Design and Design Intent]

Review the basis of design received from the Contracting Officer and the design intent.

1.11 THREE PHASES OF CONTROL

Adequately cover both on-site and off-site work with the Three Phases of Control and include the following for each DFOW.

1.11.1 Preparatory Phase

Notify the Contracting Officer at least two work days in advance of each preparatory phase meeting. The meeting will be conducted by the QC Manager and attended by the QC Specialists, the Project Superintendent, and the foreman responsible for the DFOW or as approved by the Contracting Officer. When the DFOW will be accomplished by a subcontractor, that subcontractor's foreman shall attend the preparatory phase meeting. Document the results of the preparatory phase actions in the daily Contractor Quality Control Report and in the Preparatory Phase Checklist. Perform the following prior to beginning work on each DFOW:

a. Review each paragraph of the applicable specification sections.

b. Review the Contract drawings.

c. Verify that field measurements are as indicated on construction and/or shop drawings before confirming product orders, in order to minimize waste due to excessive materials.

d. Verify that appropriate shop drawings and submittals for materials and

equipment have been submitted and approved. Verify receipt of approved factory test results, when required.

e. Review the testing plan and ensure that provisions have been made to provide the required QC testing.

f. Examine the work area to ensure that the required preliminary work has been completed.

g. Coordinate the schedule of product delivery to designated prepared areas in order to minimize site storage time and potential damage to stored materials.

h. Arrange for the return of shipping/packaging materials, such as wood pallets, where economically feasible.

i. Examine the required materials, equipment and sample work to ensure that they are on hand and conform to the approved shop drawings and submitted data.

j. Discuss specific controls used and construction methods, construction tolerances, workmanship standards, and the approach that will be used to provide quality construction by planning ahead and identifying potential problems for each DFOW.

k. Review the APP and appropriate Activity Hazard Analysis (AHA) to ensure that applicable safety requirements are met, and that required Material Safety Data Sheets (MSDS) are submitted.

1.11.2 Initial Phase

Notify the Contracting Officer at least two work days in advance of each initial phase. When construction crews are ready to start work on a DFOW, conduct the initial phase with the QC Specialists, the Project Superintendent, and the foreman responsible for that DFOW. Observe the initial segment of the DFOW to ensure that the work complies with Contract requirements. Document the results of the initial phase in the daily CQC Report and in the Initial Phase Checklist. Repeat the initial phase for each new crew to work on-site, or when acceptable levels of specified quality are not being met. Perform the following for each DFOW:

a. Establish the quality of workmanship required.

b. Resolve conflicts.

c. Check work procedures for compliance with the APP and the appropriate AHA to ensure that applicable safety requirements are met.

1.11.3 Follow-Up Phase

Perform the following for on-going work daily, or more frequently as necessary, until the completion of each DFOW and document in the daily CQC Report:

a. Ensure the work is in compliance with Contract requirements.

b. Maintain the quality of workmanship required.

c. Ensure that rework items are being corrected.

d. Assure manufacturers representatives have performed necessary inspections if required and perform safety inspections.

1.11.4 Additional Preparatory and Initial Phases

Conduct additional preparatory and initial phases on the same DFOW if the quality of on-going work is unacceptable, if there are changes in the applicable QC organization, if there are changes in the on-site production supervision or work crew, if work on a DFOW is resumed after substantial period of inactivity, or if other problems develop.

1.11.5 Notification of Three Phases of Control for Off-Site Work

Notify the Contracting Officer at least two weeks prior to the start of the preparatory and initial phases.

1.12 SUBMITTAL REVIEW AND APPROVAL

Procedures for submission, review and approval of submittals are described in Section 01 33 00 SUBMITTAL PROCEDURES.

1.13 TESTING

Except as stated otherwise in the specification sections, perform testing required under this Contract. If required, retesting shall be performed at no additional cost to the Government.

1.13.1 Accreditation Requirements

If applicable, construction materials testing laboratories must be accredited by a laboratory accreditation authority and will be required to submit a copy of the Certificate of Accreditation and Scope of Accreditation. The laboratory's scope of accreditation must include the appropriate ASTM standards (E 329, C 1077, D 3666, D 3740, A 880, E 543) listed in the technical sections of the specifications.

1.13.2 Laboratory Accreditation Authorities

Laboratory Accreditation Authorities include the National Voluntary Laboratory Accreditation Program (NVLAP) administered by the National Institute of Standards and Technology at http://ts.nist.gov/ts/htdocs/210/214/214.htm , the American Association of State Highway and Transportation Officials (AASHTO) program at http://www.transportation.org/aashto/home.nsf/frontpage , International Accreditation Services, Inc. (IAS) at http://www.iasonline.org, U. S. Army Corps of Engineers Materials Testing Center (MTC)at http://www.wes.army.mil/SL/MTC/, the American Association for Laboratory Accreditation (A2LA) program at http://www.a2la.org/, the Washington Association of Building Officials (WABO) at http://www.wabo.org/ (Approval authority for WABO is limited to projects within Washington State), and the Washington Area Council of Engineering Laboratories (WACEL) at http://www.wacel.org/labaccred.html (Approval authority by WACEL is limited to projects within Facilities Engineering Command (FEC) Washington geographical area).

1.13.3 Capability Check

The Contracting Officer retains the right to check laboratory equipment in

the proposed laboratory and the laboratory technician's testing procedures, techniques, and other items pertinent to testing, for compliance with the standards set forth in this Contract.

1.13.4 Test Results

Cite applicable Contract requirements, tests or analytical procedures used. Provide actual results and include a statement that the item tested or analyzed conforms or fails to conform to specified requirements. If the item fails to conform, notify the Contracting Officer immediately. Conspicuously stamp the cover sheet for each report in large red letters "CONFORMS" or "DOES NOT CONFORM" to the specification requirements, whichever is applicable. Test results must be signed by a testing laboratory representative authorized to sign certified test reports. Furnish the signed reports, certifications, and other documentation to the Contracting Officer via the QC Manager. Furnish a summary report of field tests at the end of each month, per the paragraph entitled "INFORMATION FOR THE CONTRACTING OFFICER".

1.13.5 Test Reports and Monthly Summary Report of Tests

Furnish the signed reports, certifications, and a summary report of field tests at the end of each month to the Contracting Officer. Attach a copy of the summary report to the last daily Contractor Quality Control Report of each month. Provide a copy of the signed test reports and certifications to the OMSI preparer for inclusion into the OMSI documentation.

1.14 QC CERTIFICATIONS

1.14.1 CQC Report Certification

Contain the following statement within the CQC Report: "On behalf of the Contractor, I certify that this report is complete and correct and equipment and material used and work performed during this reporting period is in compliance with the contract drawings and specifications to the best of my knowledge, except as noted in this report."

1.14.2 Invoice Certification

Furnish a certificate to the Contracting Officer with each payment request, signed by the QC Manager, attesting that as-built drawings are current, coordinated and attesting that the work for which payment is requested, including stored material, is in compliance with Contract requirements.

1.14.3 Completion Certification

Upon completion of work under this Contract, the QC Manager shall furnish a certificate to the Contracting Officer attesting that "the work has been completed, inspected, tested and is in compliance with the Contract." Provide a copy of this final QC Certification for completion to the OMSI preparer for inclusion into the OMSI documentation.

1.15 COMPLETION INSPECTIONS

1.15.1 Punch-Out Inspection

Near the completion of all work or any increment thereof, established by a completion time stated in the Contract Clause entitled "Commencement,

Prosecution, and Completion of Work," or stated elsewhere in the specifications, the QC Manager must conduct an inspection of the work and develop a "punch list" of items which do not conform to the approved drawings, specifications and Contract. Include in the punch list any remaining items on the "Rework Items List", which were not corrected prior to the Punch-Out Inspection. Include within the punch list the estimated date by which the deficiencies will be corrected. Provide a copy of the punch list to the Contracting Officer. The QC Manager, or staff, must make follow-on inspections to ascertain that all deficiencies have been corrected. Once this is accomplished, notify the Government that the facility is ready for the Government "Pre-Final Inspection".

1.15.2 Pre-Final Inspection

The Government and QCM will perform this inspection to verify that the facility is complete and ready to be occupied. A Government "Pre-Final Punch List" will be documented by the QC Manager as a result of this inspection. The QC Manager will ensure that all items on this list are corrected prior to notifying the Government that a "Final" inspection with the Client can be scheduled. Any items noted on the "Pre-Final" inspection must be corrected in a timely manner and be accomplished before the contract completion date for the work, or any particular increment thereof, if the project is divided into increments by separate completion dates.

1.15.3 Final Acceptance Inspection

Notify the Contracting Officer at least 14 calendar days prior to the date a final acceptance inspection can be held. State within the notice that all items previously identified on the pre-final punch list will be corrected and acceptable, along with any other unfinished Contract work, by the date of the final acceptance inspection. The Contractor must be represented by the QC Manager, the Project Superintendent, the CA, and others deemed necessary. Attendees for the Government will include the Contracting Officer, other FEAD personnel, and personnel representing the Client. Failure of the Contractor to have all contract work acceptably complete for this inspection will be cause for the Contracting Officer to bill the Contractor for the Government's additional inspection cost in accordance with the Contract Clause entitled "Inspection of Construction."

1.16 DOCUMENTATION

Maintain current and complete records of on-site and off-site QC program operations and activities.

1.16.1 Construction Documentation

Reports are required for each day that work is performed and must be attached to the Contractor Quality Control Report prepared for the same day. Maintain current and complete records of on-site and off-site QC program operations and activities. The forms identified under the paragraph "INFORMATION FOR THE CONTRACTING OFFICER" will be used. Reports are required for each day work is performed. Account for each calendar day throughout the life of the Contract. Every space on the forms must be filled in. Use N/A if nothing can be reported in one of the spaces. The Project Superintendent and the QC Manager must prepare and sign the Contractor Production and CQC Reports, respectively. The reporting of work must be identified by terminology consistent with the construction schedule. In the "remarks" sections of the reports, enter pertinent information including directions received, problems encountered during

construction, work progress and delays, conflicts or errors in the drawings or specifications, field changes, safety hazards encountered, instructions given and corrective actions taken, delays encountered and a record of visitors to the work site, quality control problem areas, deviations from the QC Plan, construction deficiencies encountered, meetings held. For each entry in the report(s), identify the Schedule Activity No. that is associated with the entered remark.

1.16.2 Quality Control Validation

Establish and maintain the following in a series of three ring binders. Binders shall be divided and tabbed as shown below. These binders must be readily available to the Contracting Officer during all business hours.

a. All completed Preparatory and Initial Phase Checklists, arranged by specification section.

b. All milestone inspections, arranged by Activity Number.

c. An up-to-date copy of the Testing Plan and Log with supporting field test reports, arranged by specification section.

d. Copies of all contract modifications, arranged in numerical order. Also include documentation that modified work was accomplished.

e. An up-to-date copy of the Rework Items List.

f. Maintain up-to-date copies of all punch lists issued by the QC staff to the Contractor and Sub-Contractors and all punch lists issued by the Government.

1.16.3 Reports from the QC Specialist(s)

Reports are required for each day that work is performed in their area of responsibility. QC Specialist reports shall include the same documentation requirements as the CQC Report for their area of responsibility. QC Specialist reports are to be prepared, signed and dated by the QC Specialists and shall be attached to the CQC Report prepared for the same day.

1.16.4 Testing Plan and Log

As tests are performed, the CA and the QC Manager will record on the "Testing Plan and Log" the date the test was performed and the date the test results were forwarded to the Contracting Officer. Attach a copy of the updated "Testing Plan and Log" to the last daily CQC Report of each month, per the paragraph "INFORMATION FOR THE CONTRACTING OFFICER". Provide a copy of the final "Testing Plan and Log" to the OMSI / eOMSI preparer for inclusion into the OMSI and eOMSI documentation.

1.16.5 Rework Items List

The QC Manager must maintain a list of work that does not comply with the Contract, identifying what items need to be reworked, the date the item was originally discovered, the date the item will be corrected by, and the date the item was corrected. There is no requirement to report a rework item that is corrected the same day it is discovered. Attach a copy of the "Rework Items List" to the last daily CQC Report of each month. The Contractor is responsible for including those items identified by the

Contracting Officer.

1.16.6 As-Built Drawings

The QC Manager is required to ensure the as-built drawings, required by Section 01 78 00.00 22 CLOSEOUT SUBMITTALS (PWD ME) are kept current on a daily basis and marked to show deviations which have been made from the Contract drawings. Ensure each deviation has been identified with the appropriate modifying documentation (e.g. PC No., Modification No., Request for Information No., etc.). The QC Manager must initial each revision. Upon completion of work, the QC Manager will furnish a certificate attesting to the accuracy of the as-built drawings prior to submission to the Contracting Officer.

1.17 NOTIFICATION ON NON-COMPLIANCE

The Contracting Officer will notify the Contractor of any detected non-compliance with the Contract. Take immediate corrective action after receipt of such notice. Such notice, when delivered to the Contractor at the work site, shall be deemed sufficient for the purpose of notification. If the Contractor fails or refuses to comply promptly, the Contracting Officer may issue an order stopping all or part of the work until satisfactory corrective action has been taken. No part of the time lost due to such stop orders will be made the subject of claim for extension of time for excess costs or damages by the Contractor.

1.18 CONSTRUCTION INDOOR AIR QUALITY (IAQ) MANAGEMENT PLAN

Submit an IAQ Management Plan within 15 days after Contract award and not less than 10 days before the preconstruction meeting. Revise and resubmit the Plan as required by the Contracting Officer. Make copies of the final plan available to all workers on site. Include provisions in the Plan to meet the requirements specified below and to ensure safe, healthy air for construction workers and building occupants.

1.18.1 Requirements During Construction

Provide for evaluation of indoor Carbon Dioxide concentrations in accordance with ASTM D6245. Provide for evaluation of volatile organic compounds (VOCs) in indoor air in accordance with ASTM D6345. Use filters with a Minimum Efficiency Reporting Value (MERV) of 8 in permanently installed air handlers during construction.

1.18.1.1 Control Measures

Meet or exceed the requirements of ANSI/SMACNA 008, Chapter 3, to help minimize contamination of the building from construction activities. The five requirements of this manual which must be adhered to are described below:

a. HVAC protection: Isolate return side of HVAC system from surrounding environment to prevent construction dust and debris from entering the duct work and spaces.

b. Source control: Use low emitting paints and other finishes, sealants, adhesives, and other materials as specified. When available, cleaning products shall have a low VOC content and be non-toxic to minimize building contamination. Utilize cleaning techniques that minimize dust generation. Cycle equipment off when not needed. Prohibit idling

motor vehicles where emissions could be drawn into building. Designate receiving/storage areas for incoming material that minimize IAQ impacts.

c. Pathway interruption: When pollutants are generated use strategies such as 100 percent outside air ventilation or erection of physical barriers between work and non-work areas to prevent contamination.

d. Housekeeping: Clean frequently to remove construction dust and debris. Promptly clean up spills. Remove accumulated water and keep work areas dry to discourage the growth of mold and bacteria. Take extra measures when hazardous materials are involved.

e. Scheduling: Control the sequence of construction to minimize the absorption of VOCs by other building materials.

1.18.1.2 Moisture Contamination

a. Remove accumulated water and keep work dry.

b. Use dehumidification to remove moist, humid air from a work area.

c. Do not use combustion heaters or generators inside the building.

d. Protect porous materials from exposure to moisture.

e. Remove and replace items which remain damp for more than a few hours.

PART 2 PRODUCTS

Not used.

PART 3 EXECUTION

3.1 PREPARATION

Designate receiving/storage areas for incoming material to be delivered according to installation schedule and to be placed convenient to work area in order to minimize waste due to excessive materials handling and misapplication. Store and handle materials in a manner as to prevent loss from weather and other damage. Keep materials, products, and accessories covered and off the ground, and store in a dry, secure area. Prevent contact with material that may cause corrosion, discoloration, or staining. Protect all materials and installations from damage by the activities of other trades.

-- End of Section --

SECTION 01 50 00.00 22

TEMPORARY CONSTRUCTION FACILITIES AND CONTROLS (PWD ME)
10/15

PART 1 GENERAL

1.1 SUMMARY

Requirements of this Section apply to, and are a component of, each section of the specifications.

1.2 REFERENCES

The publications listed below form a part of this specification to the extent referenced. The publications are referred to within the text by the basic designation only.

U.S. FEDERAL AVIATION ADMINISTRATION (FAA)

FAA AC 70/7460-1 (2007; Rev K) Obstruction Marking and Lighting

1.3 SUBMITTALS

Government approval is required for submittals with a "G" designation; submittals not having a "G" designation are for Contractor Quality Control approval. Submit the following in accordance with Section 01 33 00 SUBMITTAL PROCEDURES:

SD-01 Preconstruction Submittals

Construction site plan; G

SD-06 Test Reports

SD-07 Certificates

Backflow Tester Certification; G

Backflow Preventers Certificate of Full Approval; G

1.4 CONSTRUCTION SITE PLAN

Prior to the start of work, submit a site plan showing the locations and dimensions of temporary facilities (including layouts and details, equipment and material storage area (onsite and offsite), and access and haul routes, avenues of ingress/egress to the fenced area and details of the fence installation. Identify any areas where vehicle track pads will be installed to prevent the tracking of mud onto the pavement outside the project site limits. Indicate if the use of a supplemental or other

staging area is desired. Show locations of safety and construction fences, site trailers, construction entrances, trash dumpsters, temporary sanitary facilities, dewatering system storage tanks and infiltration pits and worker parking areas.Note that worker parking areas may be located at remote locations from the building or project site. Acceptable Parking areas shall be coordinated with the Contracting Officer.

PART 2 PRODUCTS

2.1 TEMPORARY SIGNAGE

2.1.1 Bulletin Board

Immediately upon beginning of work, provide a weatherproof glass-covered bulletin board not less than 36 by 48 inches in size for displaying the Equal Employment Opportunity poster, a copy of the wage decision contained in the contract, Wage Rate Information poster, and other information approved by the Contracting Officer. Locate the bulletin board at the project site in a conspicuous place easily accessible to all employees, as approved by the Contracting Officer.

2.1.2 Project and Safety Signs

Construct sign with a face sheet of 4- by 8-foot exterior grade plywood, 1/2-inch thick, mounted on a substantial frame of treated lumber. Provide one coat of lead-free alkyd primer paint and two coats of an exterior type white enamel to frame and sign. Erect signs within 15 days after receipt of the notice to proceed. Correct the data required by the safety sign daily, with light colored metallic or non-metallic numerals.

PART 3 EXECUTION

3.1 EMPLOYEE PARKING

Contractor employees will park privately owned vehicles in an area designated by the Contracting Officer. These areas will be within reasonable walking distance of the project site. Contractor employee parking must not interfere with existing and established parking requirements of the Portsmouth Naval Shipyard. Privately-owned vehicles are prohibited from the CIA.

3.2 AVAILABILITY AND USE OF UTILITY SERVICES

3.2.1 Temporary Utilities

Provide temporary utilities required for construction. Materials may be new or used, must be adequate for the required usage, not create unsafe conditions, and not violate applicable codes and standards.

3.2.2 Payment for Utility Services

a. Reasonable amounts of the following utilities will be made available to the Contractor without charge.

Electricity
Water
Compressed Air

b. The point at which the Government will deliver such utilities and the

quantity availible shall be coordinated with the Contracting Officer. The Contractor shall pay all costs incurred in connecting, converting, and transferring the utilities to the work. Make connections, including providing backflow-preventing devices on connections to domestic water lines; providing meters; and providing transformers; and make disconnections.

3.2.2 Telephone

Make arrangements and pay all costs for telephone facilities desired.

3.2.3 Obstruction Lighting of Cranes

Provide a minimum of two (2) aviation red or high intensity white obstruction lights on temporary structures (including cranes) over 100 feet above ground level. Light construction and installation must comply with FAA AC 70/7460-1. Lights must be operational during periods of reduced visibility, darkness, and as directed by the Contracting Officer.

3.2.4 Fire Protection

Provide temporary fire protection equipment for the protection of personnel and property during construction. Remove debris and flammable materials daily to minimize potential hazards.

3.3 CONTRACTOR'S TEMPORARY FACILITIES

3.3.1 Safety

Protect the integrity of any installed safety systems or personnel safety devices. If entrance into systems serving safety devices is required, the Contractor must obtain prior approval from the Contracting Officer. If it is temporarily necessary to remove or disable personnel safety devices in order to accomplish contract requirements, provide alternative means of protection prior to removing or disabling any permanently installed safety devices or equipment and obtain approval from the Contracting Officer.

3.3.2 Administrative Field Offices

Provide and maintain administrative field office facilities within the construction area at the designated site. Government office and warehouse facilities will not be available to the Contractor's personnel.

3.3.3 Storage Area

If desired, construct a temporary 6 foot high chain link fence around trailers and materials. Fence posts shall be supported by concrete bases . Do not place or store trailers, materials, or equipment outside the fenced area unless such trailers, materials, or equipment are assigned a separate and distinct storage area by the Contracting Officer away from the vicinity of the construction site but within the installation boundaries. Park mobile equipment, such as tractors, wheeled lifting equipment, cranes, trucks, and like equipment within the fenced area at the end of each work day.

3.3.4 Appearance of Trailers

a. Trailers utilized by the Contractor for administrative or material storage purposes must present a clean and neat exterior appearance and

be in a state of good repair. Trailers which, in the opinion of the Contracting Officer, require exterior painting or maintenance will not be allowed on installation property.

b. Paint using suitable paint and maintain the temporary facilities. Failure to do so will be sufficient reason to require their removal.

3.3.5 Maintenance of Storage Area

Keep fencing in a state of good repair and proper alignment. Grassed or unpaved areas, which are not established roadways, will be covered with a layer of gravel as necessary to prevent rutting and the tracking of mud onto paved or established roadways, should the Contractor elect to traverse them with construction equipment or other vehicles; gravel gradation will be at the Contractor's discretion.

3.3.6 Security Provisions

Provide adequate outside security lighting at the Contractor's temporary facilities. The Contractor will be responsible for the security of its own equipment; in addition, the Contractor will notify the appropriate law enforcement agency requesting periodic security checks of the temporary project field office.

3.3.7 Laydown Space

If provided, parking and laydown space on the site is limited to the areas identified by the Contracting OfficerThe Contractor shall manage the on-site work including equipment, storage trailers, material, material deliveries to allow the work to be completed within the specified contract duration. This may require the Contractor to locate suitable storage off-site and multiple equipment mobilizations to allow the work to be completed. Equipment or materials not used to complete the work shall be removed from the site. If additional offsite storage; additional mobilization or demobilizations, all these costs shall be included in the base bid.

Failure by the Contractor to plan the work based on the space limitations shall not be the basis for any claim nor an equitable price or contract time adjustment.

3.3.8 Weather Protection of Temporary Facilities and Stored Materials

Take necessary precautions to ensure that roof openings and other critical openings in the temporary facilities are monitored carefully. Take immediate actions required to seal off such openings when rain or other detrimental weather is imminent, and at the end of each workday. Ensure that the openings are completely sealed off to protect materials and equipment in the temporary facilities from damage.

3.3.9 Building and Site Storm Protection

When a warning of gale force winds is issued, take precautions to minimize danger to persons, and protect the work and nearby Government property. Precautions must include, but are not limited to, closing openings; removing loose materials, tools and equipment from exposed locations; and removing or securing scaffolding and other temporary work. Close openings in the work when storms of lesser intensity pose a threat to the work or any nearby Government property.

3.3.9.1 Condition of Readiness

Unless directed otherwise, comply with:

a. Condition FOUR (Sustained winds of 50 knots or greater expected within 72 hours): Normal daily jobsite cleanup and good housekeeping practices. Collect and store in piles or containers scrap lumber, waste material, and rubbish for removal and disposal at the close of each work day. Maintain the construction site including storage areas, free of accumulation of debris. Stack form lumber in neat piles less than 4 feet high. Remove all debris, trash, or objects that could become missile hazards. Contact Contracting Officer for Condition of Readiness (COR) updates and completion of required actions.

b. Condition THREE (Sustained winds of 50 knots or greater expected within 48 hours): Maintain "Condition FOUR" requirements and commence securing operations necessary for "Condition ONE" which cannot be completed within 18 hours. Cease all routine activities which might interfere with securing operations. Commence securing and stow all gear and portable equipment. Make preparations for securing buildings. Review requirements pertaining to "Condition TWO" and continue action as necessary to attain "Condition THREE" readiness. Contact Contracting Officer for weather and COR updates and completion of required actions.

c. Condition TWO (Sustained winds of 50 knots or greater expected within 24 hours): Curtail or cease routine activities until securing operation is complete. Reinforce or remove form work and scaffolding. Secure machinery, tools, equipment, materials, or remove from the jobsite. Expend every effort to clear all missile hazards and loose equipment from general base areas. Contact Contracting Officer for weather and Condition of Readiness (COR) updates and completion of required actions.

d. Condition ONE. (Sustained winds of 50 knots or greater expected within 12 hours): Secure the jobsite, and leave Government premises.

3.4 CLEANUP

Remove construction debris, waste materials, packaging material and the like from the work site daily. Any dirt or mud which is tracked onto paved or surfaced roadways must be cleaned away. Store within the fenced area described above or at the supplemental storage area any materials resulting from demolition activities which are salvageable. Neatly stack stored materials not in trailers, whether new or salvaged.

3.5 RESTORATION OF STORAGE AREA

Upon completion of the project remove the bulletin board, signs, barricades, haulroads, and any other temporary products from the site. After removal of trailers, materials, and equipment from within the fenced area, remove the fence that will become the property of the Contractor. Restore to the original or better condition, areas used by the Contractor for the storage of equipment or material, or other use. Gravel used to traverse grassed areas must be removed and the area restored to its original condition, including top soil and seeding as necessary.

-- End of Section --

SECTION 01 57 19.00 22

TEMPORARY ENVIRONMENTAL CONTROLS - PORTSMOUTH NAVAL SHIPYARD (PWD ME)
07/15

PART 1 GENERAL

1.1 REFERENCES

The publications listed below form a part of this specification to the extent referenced. The publications are referred to within the text by the basic designation only. Note: This is not an all inclusive list of publications and other references may be applicable.

U.S. NATIONAL ARCHIVES AND RECORDS ADMINISTRATION (NARA)

29 CFR 1910.120	Hazardous Waste Operations and Emergency Response
40 CFR 112	Oil Pollution Prevention
40 CFR 241	Guidelines for Disposal of Solid Waste
40 CFR 243	Guidelines for the Storage and Collection of Residential, Commercial, and Institutional Solid Waste
40 CFR 258	Subtitle D Landfill Requirements
40 CFR 260	Hazardous Waste Management System: General
40 CFR 261	Identification and Listing of Hazardous Waste
40 CFR 262	Standards Applicable to Generators of Hazardous Waste
40 CFR 263	Standards Applicable to Transporters of Hazardous Waste
40 CFR 264	Standards for Owners and Operators of Hazardous Waste Treatment, Storage, and Disposal Facilities
40 CFR 265	Interim Status Standards for Owners and Operators of Hazardous Waste Treatment, Storage, and Disposal Facilities
40 CFR 266	Standards for the Management of Specific Hazardous Wastes and Specific Types of Hazardous Waste Management Facilities
40 CFR 268	Land Disposal Restrictions
40 CFR 270	EPA Administered Permit Programs: The Hazardous Waste Permit Program

40 CFR 272	Approved State Hazardous Waste Management Programs
40 CFR 273	Standards For Universal Waste Management
40 CFR 279	Standards for the Management of Used Oil
40 CFR 280	Technical Standards and Corrective Action Requirements for Owners and Operators of Underground Storage Tanks (UST)
40 CFR 300	National Oil and Hazardous Substances Pollution Contingency Plan
40 CFR 355	Emergency Planning and Notification
40 CFR 372-SUBPART D	Specific Toxic Chemical Listings
40 CFR 761	Polychlorinated Biphenyls (PCBs) Manufacturing, Processing, Distribution in Commerce, and Use Prohibitions
40 CFR 82	Protection of Stratospheric Ozone
49 CFR 171	General Information, Regulations, and Definitions
49 CFR 172	Hazardous Materials Table, Special Provisions, Hazardous Materials Communications, Emergency Response Information, and Training Requirements
49 CFR 173	Shippers - General Requirements for Shipments and Packagings
49 CFR 178	Specifications for Packagings

STATE OF MAINE REGULATIONS

The following STATE OF MAINE REGULATIONS are available on the Internet at: http://www.maine.gov/dep/permits.htm

STATE OF MAINE Statutes are available on the internet at http://www.mainelegislature.org/legis/statues/38/title38ch3sec0.html

MAINE DEP AIR BUREAU CHAPTER 101 Visible Emissions Regulations; http://www.maine.gov/dep/air/rules/index.html

MAINE DEP AIR BUREAU CHAPTER 151 Architectural and Industrial Maintenance(AIM) COATINGS; http://www.maine.gov/dep/air/rules/index.html

MAINE DEP 38 MSRA 420-C	Erosion and Sedimentation Control Law and Rules
MAINE DEP 38 MSRA 420-D	Stormwater Management
MAINE 38 MRSA 439-B	Contractors Certified in Erosion Control (Effective January 1, 2013)

MAINE DEP MSRA 481-490	Site Location of Development
MAINE 38 MSRA 850	Identification of Hazardous Waste
MAINE 38 MSRA 851	Standards for Generators of Hazardous Waste
MAINE 38 MSRA 852	Land Disposal Restrictions
MAINE DEPLW0738	Stormwater Management for Maine
MAINE DEPLW0588	Maine Erosion and Sediment Control Best Management Practices
MAINE 88 MRSA 480A-480Z	Natural Resources Protection Act

MAINE DEP AIR BUREAU CHAPTER 159 Control of Volatile Organic Compounds from Adhesives and Sealants; http://www.maine.gov/dep/air/rules/index.html

1.2 DEFINITIONS

1.2.1 Sediment

Soil and other debris that have eroded and have been transported by runoff water or wind.

1.2.2 Solid Waste

Garbage, refuse, debris, sludge, or other discharged material, including solid, liquid, semisolid, or contained gaseous materials resulting from domestic, industrial, commercial, mining, or agricultural operations. Types of solid waste typically generated at construction sites may include:

a. Green waste: The vegetative matter from landscaping, land clearing and grubbing, including, but not limited to, grass, bushes, scrubs, small trees and saplings, tree stumps and plant roots. Marketable trees, grasses and plants that are indicated to remain, be re-located, or be re-used are not included.

b. Surplus soil: Existing non-hazardous soil that is in excess of what is required for this work, including aggregates intended, but not used, for on-site mixing of concrete, mortars and paving.

c. Debris: Non-hazardous solid material generated during the construction, demolition, or renovation of a structure which exceeds 2.5 inch particle size that is: a manufactured object; plant or animal matter; or natural geologic material (e.g. cobbles and boulders), broken or removed concrete, masonry, and rock asphalt paving; ceramics; roofing paper and shingles. Inert materials may be reinforced with or contain ferrous wire, rods, accessories and weldments. A mixture of debris and other material such as soil or sludge is also subject to regulation as debris if the mixture is comprised primarily of debris by volume, based on visual inspection.

d. Wood: Dimension and non-dimension lumber, plywood, chipboard, hardboard. Treated and/or painted wood that meets the definition of lead contaminated or lead based contaminated paint is not included.

e. Scrap metal: Scrap and excess ferrous and non-ferrous metals such as reinforcing steel, structural shapes, pipe and wire that are recovered

or collected and disposed of as scrap. Scrap metal meeting the definition of hazardous material or hazardous waste is not included.

f. Paint cans: Metal cans that are empty of paints, solvents, thinners and adhesives. If permitted by the paint can label, a thin dry film may remain in the can. NOTE: Aerosol (paint) cans are Hazardous Wastes and must not be disposed of as solid waste or be considered in any definition of "empty", "paint", or "metal" cans.

g. Recyclables: Materials, equipment and assemblies such as doors, windows, door and window frames, plumbing fixtures, glazing and mirrors that are recovered and sold as recyclables.

h. Hazardous Waste: By definition, to be a hazardous waste a material must first meet the definition of a solid waste. Hazardous waste and hazardous debris are special cases of solid waste. They have additional regulatory controls and must be handled separately. They are thus defined separately in this document.

Material not regulated as solid waste are: nuclear source or byproduct materials regulated under the Federal Atomic Energy Act of 1954 as amended; suspended or dissolved materials in domestic sewage effluent or irrigation return flows, or other regulated point source discharges; regulated air emissions; and fluids or wastes associated with natural gas or crude oil exploration or production.

i. Special Waste: "Special waste" means any solid waste generated by sources other than household and typical commercial establishments that exists in such an unusual quantity or in such a chemical or physical state, or any combination thereof, that may disrupt or impair effective waste management or threaten the public health, human safety or the environment and requires special handling, transportation and disposal procedures. Special waste includes, but is not limited to:

(1) Ash;

(2) Industrial and industrial process waste;

(3) Sludge and dewatered septage;

(4) Debris from nonhazardous chemical spills and cleanup of those spills;

(5) Contaminated soils and dredge materials;

(6) Asbestos and asbestos-containing waste;

(7) Sand blast grit and non-liquid paint waste;

(8) High and low pH waste;

(9) Spent filter media residue; and

(10) Shredder residue.

1.2.3 Hazardous Debris

As defined in Solid Waste paragraph, debris that contains listed hazardous waste (either on the debris surface, or in its interstices, such as pore

structure) per 40 CFR 261; or debris that exhibits a characteristic of hazardous waste per 40 CFR 261.

1.2.4 Chemical Wastes

This includes salts, acids, alkalies, herbicides, pesticides, and organic chemicals.

1.2.5 Garbage

Refuse and scraps resulting from preparation, cooking, dispensing, and consumption of food.

1.2.6 Hazardous Waste

Any discarded material, liquid, solid, or gas, which meets the definition of hazardous material or is designated hazardous waste by the Environmental Protection Agency or State Hazardous Control Authority as defined in 40 CFR Parts 260-273, as applicable.

The Resource Conservation and Recovery Act (RCRA) governs the management of hazardous wastes. There is no continuously updated, comprehensive list of hazardous waste, as hazardous waste identification is a process that involves many steps. By Regulation, to be considered a hazardous waste, a material first must be classified as a solid waste (40 CFR §261.2). If a waste is a solid waste, it must then be determined if it is hazardous waste (§262.11). Wastes are defined as hazardous by EPA if they are specifically named on one of four lists of hazardous wastes located in Subpart D of 40 CFR 261, or if they exhibit one of four characteristics located in Subpart C of Part 261 (characteristic wastes), which are: ignitability, corrosivity, reactivity and toxicity. Generators are responsible for characterizing their waste and must determine whether a waste exhibits a characteristic by either testing or applying knowledge of the hazardous waste characteristic of the waste (§262.11). Hazardous waste controls also apply to Universal Wastes.

1.2.7 Hazardous Materials

Hazardous materials as defined in 49 CFR 171 and listed in 49 CFR 172.

Hazardous material is any material that:

a. Is regulated as a hazardous material per 49 CFR 173, or

b. Requires a Material Safety Data Sheet (MSDS) per 29 CFR 1910.120, or

c. During end use, treatment, handling, packaging, storage, transportation, or disposal meets or has components that meet or have potential to meet the definition of a hazardous waste as defined by 40 CFR 261 Subparts A, B, C, or D.

Designation of a material by this definition, when separately regulated or controlled by other instructions or directives, does not eliminate the need for adherence to that hazard-specific guidance which takes precedence over this instruction for "control" purposes. Such material include ammunition, weapons, explosive actuated devices, propellants, pyrotechnics, chemical and biological warfare materials, medical and pharmaceutical supplies, medical waste and infectious materials, bulk fuels, radioactive materials, and other materials such as asbestos, mercury, and polychlorinated

biphenyls (PCBs). Nonetheless, the exposure may occur incident to manufacture, storage, use and demilitarization of these items.

1.2.8 Waste Hazardous Material (WHM)

Any waste material which because of its quantity, concentration, or physical, chemical, or infectious characteristics may pose a substantial hazard to human health or the environment and which has been so designated. Used oil not containing any hazardous waste, as defined above, falls under this definition.

1.2.9 Oil or Oily Waste

Oil: Oil of any kind or in any form, including, but not limited to: fats, oils, or greases of animals, fish or marine mammal origin; vegetable oils, including oils from seeds, nuts, fruits, or kernels; and, other oils and greases, including petroleum fuel oil, sludge, synthetic oils, mineral oils, oil refuse or oil mixed with wastes other than dredged oil.

Oily Waste: Those materials which are, or were, mixed with used oil and have become separated from that used oil. Oily wastes also means materials, including wastewaters, centrifuge solids, filter residues or sludges, bottom sediments, tank bottoms, and sorbents which have come into contact with and have been contaminated by, used oil and may be appropriately tested and discarded in a manner which is in compliance with other State and local requirements.

This definition includes materials such as oily rags, "kitty litter" sorbent clay and organic sorbent material. These materials may be land filled provided that:

a. It is not prohibited in other State regulations or local ordinances;

b. The amount generated is "de minimus" (a small amount);

c. It is the result of minor leaks or spills resulting from normal process operations; and

d. All free-flowing oil has been removed to the practical extent possible.

Large quantities of this material, generated as a result of a major spill or in lieu of proper maintenance of the processing equipment, are a solid waste. As a solid waste, a hazardous waste determination must be performed prior to disposal. As this can be an expensive process, it is recommended that this type of waste be minimized through good housekeeping practices and employee education.

1.2.10 Regulated Waste

Those solid waste that have specific additional Federal, State, or local controls for handling, storage, or disposal.

1.2.11 Ozone Depleting Substance (ODS)

Chlorofluorocarbons (CFCs), halons or chlorinated hydrocarbons (such as carbon tetrachloride and methyl chloroform), and hydrochlorofluorocarbon (HCFCs) which have been linked to depletion of the earth's ozone layer are all substances collectively known as ozone depleting substances or ODSs. Class I or Class II ODS substances are defined and listed in the Clean Air

Act Section 602 and 40 CFR 82.

1.2.12 Universal Waste

The universal waste regulations streamline collection requirements for certain hazardous wastes in the following categories: batteries, pesticides, mercury-containing equipment (e.g., thermostats) and lamps (e.g., fluorescent bulbs). The rule is designed to reduce hazardous waste in the municipal solid waste (MSW) stream by making it easier for universal waste handlers to collect these items and send them for recycling or proper disposal. These regulations can be found at 40 CFR 273.

1.3 SUBMITTALS

Government approval is required for submittals with a "G" designation; submittals not having a "G" designation are for Contractor Quality Control approval. Submit the following in accordance with Section 01 33 00 SUBMITTAL PROCEDURES:

SD-01 Preconstruction Submittals

Preconstruction Survey; G

Solid Waste Management Plan; G

Regulatory Notifications; G

Environmental Management Plan (EMP); G

Contractor Hazardous Material Inventory Log; G

Storm Water Management/Erosion and Sedimentation Control Plan; G

SD-06 Test Reports

Laboratory Analysis; G

Disposal Requirements; G

Solid Waste Management Report; G

SD-11 Closeout Submittals

Some of the records listed below are also required as part of other submittals. For the "Records" submittal, maintain on-site a separate three-ring Environmental Records binder and submit at the completion of the project. Make separate parts to the binder corresponding to each of the applicable sub items listed below.

Waste Determination Documentation; G

Disposal Documentation for Hazardous and Regulated Waste; G

Contractor 40 CFR Employee Training Records; G

Solid Waste Management Report; G

Contractor Hazardous Material Inventory Log; G

Hazardous Waste/Debris Management; G

Regulatory Notifications; G

1.4 ENVIRONMENTAL PROTECTION REQUIREMENTS

Provide and maintain, during the life of the contract, environmental protection as defined herein. Plan for and provide environmental protective measures to control pollution that develops during normal construction practice. Plan for and provide environmental protective measures required to correct conditions that develop during the construction of permanent or temporary environmental features associated with the project. Comply with Federal, State, and local regulations pertaining to the environment, including water, air, solid waste, hazardous waste and substances, oily substances, and noise pollution.

The Contractor may be required to promptly conduct tests and procedures for the purpose of assessing whether construction operations are in compliance with Applicable Environmental Laws. Analytical work shall be done by qualified laboratories; and where required by law, the laboratories shall be certified.

1.4.1 Environmental Compliance Assessment Training and Tracking System (ECATTS)

The QC Manager is responsible for environmental compliance on projects unless an Environmental Manager is named. The QC Manager (and alternative QC Manager) or Environmental Manager shall complete ECATTS training prior to starting respective portions of on-site work under this contract. If personnel changes occur for any of these positions after starting work, replacement personnel shall complete ECATTS training within 14 days of assignment to the project.

Submit an ECATTS certificate of completion for personnel who have completed the required "Environmental Compliance Assessment Training and Tracking System (ECATTS)" training. This training is web-based and can be accessed from any computer with Internet access using the following instructions.

Register for NAVFAC Environmental Compliance Training and Tracking System, by logging on to https://environmentaltraining.ecatts.com/start. Obtain the password for registration from the Contracting Officer.

This training has been structured to allow Contractor personnel to receive credit under this contract and also to carry forward credit to future contracts. Contractors shall ensure that the QC Manager (and alternate QC Manager) or Environmental Manager review their training plans for new modules or updated training requirements prior to beginning work. Some training modules are tailored for specific State regulatory requirements; therefore, Contractors working in multiple states will be requires to re-take modules tailored to the state where the contract work is being performed.

ECATTS is available for use by all Contractor and subcontractor personnel associated with this project. These other personnel are encouraged (but not required) to take the training and may do so at their discretion.

1.5 QUALITY ASSURANCE

1.5.1 Preconstruction Survey

Perform a Preconstruction Survey of the project site with the Contracting Officer, and when requested, take photographs showing existing environmental conditions in and adjacent to the site. Submit a report for the record with a copy provided to the Contracting Officer. The Contractor must obtain a camera pass from PNSY security (via Contracting Officer) prior to use of a camera at PNSY. Digital cameras only shall be used. All computer discs shall be turned over to PNSY security (via Contracting Officer) for review and clearance prior to use by the Contractor.

1.5.2 Regulatory Notifications

The Contractor is responsible for preparing all regulatory notification requirements in accordance with Federal, State and local regulations. Regulatory notifications shall be submitted by the Government unless otherwise directed by the Contracting Officer. The Contractor shall submit copies of all regulatory notifications to the Contracting Officer prior to commencement of work activities. Typically, regulatory notifications must be provided for the following (this listing is not all inclusive): demolition, renovation, remediation of controlled substances asbestos, hazardous waste, lead paint.

1.5.3 Environmental Brief

Attend an environmental brief prior to commencing any work on the Shipyard. The brief will be conducted by the Contracting Officer's Representative. The Contractor shall provide the following information: types, quantities, and use of hazardous materials that will be brought onto the activity; types and quantities of wastes/wastewater that may be generated during the contract; types and quantities of oil that will be brought onto the activity; and pollution control measures for spill prevention and control, and any bulk oil storage container information including quantity and type of product stored. Discuss the results of the Preconstruction Survey at this time.

Develop a mutual understanding relative to the details of environmental protection, including measures for protecting natural resources, required reports, required permits, specific permit requirements, and other measures to be taken. Identify additional environmental concerns specific to the site (i.e. spill prevention and control, etc.).

1.5.4 Environmental Manager

Appoint in writing an Environmental Manager for the project site. The Environmental Manager will be directly responsible for coordinating Contractor compliance with Federal, State, local, and Shipyard requirements. The Environmental Manager cannot perform the duties of the Project Superintendent or the SSHO. The Environmental Manager shall ensure compliance with Hazardous Waste Program requirements (including hazardous waste handling, storage, manifesting, and disposal); implement the Environmental Management Plan; ensure that all environmental permits are obtained, maintained, and closed out; ensure compliance with Storm Water Program Management requirements; ensure compliance with Hazardous Materials (storage, handling, and reporting) requirements; and coordinate any remediation of regulated substances (lead, asbestos, PCB transformers).

This can be a collateral position; however, the person in this position must be trained to adequately accomplish the following duties: ensure waste segregation and storage compatibility requirements are met; inspect and manage Satellite Accumulation areas; ensure only authorized personnel add wastes to containers; ensure all Contractor personnel are trained in 40 CFR requirements in accordance with their position requirements; coordinate removal of waste containers; implement, inspect and maintain erosion and sediment controls as required by State law; and maintain the Environmental Records binder and required documentation, ensure compliance with all SPCC requirements, not limited to the proper storage of tanks and containers and their secondary containment, inspections, spill procedures, etc. including environmental permits compliance and close-out.

1.5.5 Contractor 40 CFR Employee Training Records

Prepare and maintain employee training records throughout the term of the contract meeting applicable 40 CFR requirements. The Contractor shall ensure every employee completes a program of classroom instruction or on-the-job training that teaches them to perform their duties in a way that ensures compliance with Federal, State and local regulatory requirements for RCRA Large Quantity Generator. The Contractor will provide a Position Description for each employee, by subcontractor, based on the Davis-Bacon Wage Rate designation or other equivalent method, evaluating the employee's association with hazardous and regulated wastes. This Position Description will include training requirements as defined in 40 CFR 265 for a Large Quantity Generator facility. Submit these training records to the Contracting Officer at the conclusion of the project, unless otherwise directed.

1.6 SOLID WASTE DISPOSAL PLAN

Provide a Solid Waste Disposal Plan in accordance with Paragraph entitled "Solid Waste Management Plan" in Part 3 of this Section.

PART 2 PRODUCTS

Not used.

PART 3 EXECUTION

3.1 ENVIRONMENTAL MANAGEMENT PLAN (EMP)

Prior to initiating any work on site, the Contractor shall meet with the Contracting Officer and the Shipyard's Environmental Staff (Code 106.3) to discuss the proposed Environmental Management Plan and develop a mutual understanding relative to the details of environmental protection required to be addressed in EMP, including measures for protecting natural resources and other measures to be taken. The Environmental Management Plan shall be submitted in the following format and shall include the elements specified below.

a. Description of the Environmental Management Plan

(1) General overview and purpose

(a) A brief description of each specific plan required by environmental permit or elsewhere in this contract.

(b) The duties and level of authority assigned to the person(s) on

the job site that oversee environmental compliance.

(c) A copy of any standard or project specific operating procedures that will be used to effectively manage and protect the environment on the project site.

(d) Communication and training procedures that will be used to convey environmental management requirements to Contractor employees and subcontractors.

(e) Emergency contact information (office phone number, cell phone number, and e-mail address).

(2) General site information including a site plan showing haul routes, stockpile and material laydown and storage areas, dust control, construction trailers locations, sanitary facilities and all other construction facilities required for the work.

(3) A letter signed by an officer of the firm appointing the Environmental Manager and stating that he/she is responsible for managing and implementing the Environmental Program as described in this contract. Include in this letter the Environmental Manager's authority to direct the removal and replacement of non-conforming work.

b. Protection of the Environment from Waste Derived from Contractor Operations

(1) Control and disposal of solid and sanitary waste.

(2) Control and disposal of hazardous waste (Hazardous Waste Management Section)

This item will consist of the management procedures for all hazardous waste to be generated. The elements of those procedures will coincide with the Activity Hazardous Waste Management Plan will be provided by the Contracting Officer. As a minimum, include the following:

(a) Procedures to be employed to ensure a written waste determination is made for appropriate wastes which are to be generated;

(b) Sampling/analysis plan;

(c) Methods of hazardous waste accumulation/storage (i.e., in tanks and/or containers);

(d) Management procedures for storage, labeling, transportation, and disposal of waste (treatment of waste is not allowed unless specifically noted);

(e) Management procedures and regulatory documentation ensuring disposal of hazardous waste complies with Land Disposal Restrictions (40 CFR 268);

(f) Management procedures for recyclable hazardous materials such as lead-acid batteries, used oil, and the like;

(g) Used oil management procedures in accordance with 40 CFR 279;

(h) Pollution prevention/hazardous waste minimization procedures;

(i) Plans for the disposal of hazardous waste by permitted facilities;

(j) Procedures to be employed to ensure all required employee training records are maintained.

c. Prevention of Releases to the Environment

(1) At a minimum, procedures to prevent releases to the environment will be made available, as well as what notifications to make in the event of a release to the environment.

(2) A Spill Prevention, Control, and Countermeasures (SPCC) Plan is required if work is anticipated to extend beyond 6 months, AND will use bulk oil storage containers 55 gallons or greater, in accordance with 40 CFR 112. All SPCC plans must be approved by Code 106.3. Plans need not be certified by a Professional Engineer but must clearly demonstrate proper management of all tanks and containers on site.

(3) Spill plans should at a minimum include the following:

a) Type of tank or container, quantity stored, type of product stored, location.

b) Secondary containment required for tanks/containers 55 gallons or greater; double-wall tanks preferred.

c) Tank inspection forms (industry standard, but prefer if they used the Shipyard inspection forms) Records shall be kept for 3 years or for the duration of the project. Tanks shall be inspected monthly.

i) Bulk storage containers (55 gallons or greater require monthly inspection).

ii) Inspection sheet for release of retained storm water from secondary containment.

d) Where spill kits are located.

e) If transferring fuel: how often, what type of fuel, and where? The Contractor must coordinate with Contracting Officer Representative and Code 106.3 prior to transferring any fuel.

f) Who to notify in case of a spill (Central Dispatch, NRC, MEDEP as needed).

g) How to clean up a spill safely and how to properly dispose of spill cleanup waste (call for pickup at B357).

g. Regulatory Notification and Permits

List what notifications and permit applications must be made.

Demonstrate that those permits have been obtained by including copies of all applicable, environmental permits.

3.1.1 Environmental Management Plan Review

Within 30 calendar days after the Contract award date, the Contractor shall submit the proposed Environmental Management Plan for further discussion, review, and approval. Commencement of work will not begin until the environmental management plan has been approved by the Contracting Officer and Shipyard's Environmental Office.

3.1.2 Licenses, State and Federal permits

The approved State and Federal permits for this project may include the following:

1. Costal Zone Management Act
2. MEDEP Site Location of Development Permit Modification (SLDA)
3. Natural Resource Protection Act Permit (NRPA)
4. Army Corp of Engineers (ACOE)

Copies of the approved permit(s) are available from the Contracting Officer. The Contractor shall maintain copies of all permits at the project site. The Contractor shall comply with all the terms and conditions of the approved permits.

Where required by the State regulatory authority, the inspections and certifications will be provided through the services of a Professional Engineer (PE), registered in the State of Maine. Where a PE is not required, the individual must be otherwise qualified by other current State licensure, specific training and prior experience (minimum 5 years). As a part of the quality control plan, which is required to be submitted for approval by the quality control section, provide a sub item containing the name, appropriate professional registration or licence number, address, and telephone number of the professionals or other qualified persons who will be performing the inspections and certifications for each permit.

3.2 PROTECTION OF NATURAL RESOURCES

Preserve the natural resources within the project boundaries and outside the limits of permanent work and as specified in the permits issued for the work. Restore to an equivalent or improved condition upon completion of work. Confine construction activities to within the limits of the work indicated or specified.

Do not disturb fish and wildlife. Do not alter water flows or otherwise significantly disturb the native habitat adjacent to the project and critical to the survival of fish and wildlife, except as indicated or specified.

Except in areas to be cleared, do not remove, cut, deface, injure, or destroy trees or shrubs without the Contracting Officer's permission. Do not fasten or attach ropes, cables, or guys to existing nearby trees for anchorages unless authorized by the Contracting Officer. Where such use of attached ropes, cables, or guys is authorized, the Contractor will be responsible for any resultant damage.

Protect existing trees which are to remain and which may be injured,

bruised, defaced, or otherwise damaged by construction operations. Remove displaced rocks from uncleared areas. By approved excavation, remove trees with 30 percent or more of their root systems destroyed. Remove trees and other landscape features scarred or damaged by equipment operations, and replace with equivalent, undamaged trees and landscape features. Obtain Contracting Officer's approval before replacement. Tree wound paint shall not be used for tree cuts or stumps.

3.3 SOLID WASTE MANAGEMENT PLAN

Provide a written Solid Waste Disposal Plan (SWDP) to the Contracting Officer, of intended licensed disposal sites for Government approval and for submission to State regulatory agencies. At a minimum, the SWDP shall contain, but not be limited to, the following wastes: stumps and grubbings, excess soil, construction debris, demolition debris, household solid waste, special waste, and industrial solid waste. The submission shall contain the name of the disposal facility, address, facility phone number, and the waste type and quantity to be disposed of at the facility.

If waste from the site is taken to a transfer station, identify the facility or facilities at which the waste is ultimately disposed. Government approval for the facility must be obtained prior to transporting wastes off Government property.

Provide to the Contracting Officer written notification of the quantity of solid waste/debris that is anticipated to be generated by construction. Include in the report the locations where various types of waste will be disposed or recycled. Include letters of acceptance or as applicable, submit one copy of a State license showing such agency's approval of the disposal plan before transporting wastes off Government property.

3.3.1 Solid Waste Management Report

Monthly, submit a solid waste disposal report to the Contracting Officer. For each waste, the report shall state the classification (using the definitions provided in this section), amount, location, and name of the business receiving the solid waste.

The Contractor shall include copies of the waste handling facilities' weight tickets, receipts, bills of sale, and other sales documentation. In lieu of sales documentation, the Contractor may submit a statement indicating the disposal location for the solid waste which is signed by an officer of the Contractor firm authorized to legally obligate or bind the firm. The sales documentation or Contractor certification will include the receiver's tax identification number and business, EPA or State registration number, along with the receiver's delivery and business addresses and telephone numbers. For each solid waste retained by the Contractor for his/her own use, the Contractor shall submit on the solid waste disposal report the information previously described in this paragraph. Prices paid or received will not be reported to the Contracting Officer unless required by other provisions or specifications of this Contract or public law.

3.3.2 Control and Management of Solid Wastes

Pick up solid wastes, and place in covered containers which are regularly emptied. Do not prepare or cook food on the project site. Prevent contamination of the site or other areas when handling and disposing of wastes. At project completion, leave the areas clean. Recycling is

encouraged and can be coordinated with the Contracting Officer and the Shipyard Recycling Coordinator. Remove all solid waste (including non-hazardous debris) from Government property and dispose off-site at an approved landfill. Solid waste disposal off-site must comply with most stringent local, State, and Federal requirements including 40 CFR 241, 40 CFR 243, and 40 CFR 258.

Manage spent hazardous material used in construction including, but not limited to, aerosol cans, waste paint, cleaning solvents, contaminated brushes, and used rags, as per environmental law and Shipyard requirements.

3.3.2.1 Dumpsters

Equip dumpsters with a secure cover and paint the standard Shipyard color. Keep cover closed at all times, except when being loaded with trash and debris. Locate dumpsters behind the construction fence or out of the public view. Empty site dumpsters at least once a week or as needed to keep the site free of debris and trash. If necessary, provide 55 gallon trash containers painted the darker Shipyard color to collect debris in the construction site area. Locate the trash containers behind the construction fence or out of the public view. Empty trash containers at least once a day. For large demolitions, large dumpsters without lids are acceptable, but should not have debris higher than the sides before emptying.

3.4 WASTE DETERMINATION DOCUMENTATION

Complete a Waste Determination form (provided at the pre-construction conference) for all Contractor derived wastes to be generated. Base the waste determination upon either a constituent listing from the manufacturer used in conjunction with consideration of the process by which the waste was generated, EPA approved analytical data and/or laboratory analysis (Material Safety Data Sheets (MSDS) by themselves are not adequate). Attach all support documentation to the Waste Determination form. As a minimum, a Waste Determination form must be provided for the following wastes (this listing is not all inclusive): oil and latex based painting and caulking products, solvents, adhesives, aerosols, petroleum products, and all containers of the original materials.

3.5 CONTRACTOR HAZARDOUS MATERIAL INVENTORY LOG

Submit the "Contractor Hazardous Material Inventory Log" (found at: http://www.wbdg.org/ccb/NAVGRAPH/graphtoc.pdf), which provides information required by EPCRA Sections 312 and 313 along with corresponding Material Safety Data Sheets (MSDS) to the Contracting Officer at the start and at the end of construction (30 days from final acceptance), and update no later than January 31 of each calendar year during the life of the contract. Documentation for any spills/releases, environmental reports or off-site transfers shall be submitted to the Contracting Officer.

3.6 POLLUTION PREVENTION/HAZARDOUS WASTE MINIMIZATION

Minimize the use of hazardous materials and the generation of hazardous waste. Include procedures for pollution prevention/ hazardous waste minimization in the Hazardous Waste Management Section of the Environmental Management Plan. Consult with the Shipyard Environmental Office for suggestions and to obtain a copy of the installation's pollution prevention/hazardous waste minimization plan for reference material when preparing this part of the plan. If no written plan exists, obtain

information by contacting the Contracting Officer. Describe the types of the hazardous materials expected to be used in the construction when requesting information.

3.7 WHM/HW MATERIALS PROHIBITION

No waste hazardous material or hazardous waste shall be disposed of on Government property. No hazardous material shall be brought onto Government property that does not directly relate to requirements for the performance of this contract.

Incidental materials used to support the contract including, but not limited to, aerosol cans, waste paint, cleaning solvents, contaminated brushes, rags, clothing, etc. may be hazardous wastes and shall be disposed by the Government as described in the Hazardous Waste Management Section. The list is illustrative rather than inclusive. Universal wastes must be managed with controls similar to those for hazardous waste.

The Contractor is not authorized to discharge any materials to sanitary sewer, storm drain, or to the Piscataqua River or conduct waste treatment or disposal on Government property without written approval of the Contracting Officer.

3.8 HAZARDOUS MATERIAL MANAGEMENT

No hazardous material shall be brought onto Government property that does not directly relate to requirements for the performance of this contract.

Include hazardous material control procedures in the Safety Plan. Address procedures and proper handling of hazardous materials, including the appropriate transportation requirements. Submit a MSDS and estimated quantities to be used for each hazardous material to the Contracting Officer prior to bringing the material on the Shipyard. Typical materials requiring MSDS and quantity reporting include, but are not limited to, oil and latex based painting and caulking products, solvents, adhesives, aerosol, and petroleum products. At the end of the project, provide the Contracting Officer with the maximum quantity of each material that was present at the site at any one time, the dates the material was present, the amount of each material that was used during the project, and how the material was used. Ensure that hazardous materials are utilized in a manner that will minimize the amount of hazardous waste that is generated. Ensure that all containers of hazardous materials have NFPA labels or their equivalent. Keep copies of the MSDS for hazardous materials on site at all times and provide them to the Contracting Officer at the end of the project. Certify that all hazardous materials removed from the site are hazardous materials and do not meet the definition of hazardous waste per 40 CFR 261.

3.9 PETROLEUM PRODUCTS AND REFUELING

Conduct the fueling and lubricating of equipment and motor vehicles in a manner that protects against spills and evaporation. Manage all used oil generated on site in accordance with 40 CFR 279. Determine if any used oil generated while on-site exhibits a characteristic of hazardous waste. Used oil containing 1,000 parts per million of solvents will be considered a hazardous waste and disposed of at Contractor's expense. Used oil mixed with a hazardous waste will also be considered a hazardous waste.

3.9.1 Oily and Hazardous Substances

Prevent oil or hazardous substances from entering the ground, drainage areas, or navigable waters. In accordance with 40 CFR 112, surround all temporary fuel oil or petroleum storage tanks with a temporary berm or containment of sufficient size and strength to contain the contents of the tanks, plus 10 percent freeboard for precipitation. The berm will be impervious to oil for 72 hours and be constructed so that any discharge will not permeate, drain, infiltrate, or otherwise escape before cleanup occurs.

3.9.2 Inadvertent Discovery of Petroleum Contaminated Soil or Hazardous Wastes

If petroleum contaminated soil or suspected hazardous waste is found during construction that was not identified in the contract documents, the Contractor shall immediately notify the Contracting Officer. The Contractor shall not disturb this material until authorized by the Contracting Officer.

3.10 FUEL TANKS

Petroleum products and lubricants required to sustain up to 30 days of construction activity may be kept on site. Storage and refilling practices shall comply with 40 CFR Part 112. Secondary containment shall be provided and be no less than 110 percent of the tank volume plus five inches of free-board. If a secondary berm is used for containment then the berm shall be impervious to oil for 72 hours and be constructed so that any discharge will not permeate, drain, infiltrate, or otherwise escape before cleanup occurs. Drips pans are required and the tanks must be covered during inclement weather.

3.11 RELEASES/SPILLS OF OIL AND HAZARDOUS SUBSTANCES

Exercise due diligence to prevent, contain, and respond to **ALL** spills of hazardous material, hazardous substances, hazardous waste, sewage, regulated gas, petroleum, lubrication oil, and other substances regulated by environmental law. In the event of a spill, take prompt, effective action to stop, contain, curtail, or otherwise limit the amount, duration, and severity of the spill/release. In the event of **ANY** releases of oil and hazardous substances, chemicals, or gases; immediately (within 15 minutes) notify the Shipyard Fire Department and the Shipyard's Command Duty Officer, and the Contracting Officer. If the Contractor's response is inadequate, the Navy may respond. If this should occur, the Contractor will be required to reimburse the Government for spill response assistance and analysis.

The Contractor is responsible for verbal and written notifications as required by the Federal 40 CFR 355, State, and local regulations and Navy Instructions. Spill response shall be in accordance with 40 CFR 300 and applicable State and local regulations. Contain and clean up these spills without cost to the Government. If Government assistance is requested or required, the Contractor will reimburse the Government for such assistance. Provide copies of the written notification and documentation that a verbal notification was made within 20 days.

Maintain spill cleanup equipment and materials at the work site. Clean up all hazardous and non-hazardous (WHM) waste spills. The Contractor shall reimburse the Government for all material, equipment, and clothing

generated during any spill cleanup. The Contractor shall reimburse the Government for all costs incurred including sample analysis materials, equipment, and labor if the Government must initiate its own spill cleanup procedures, for Contractor responsible spills, when:

a. The Contractor has not begun spill cleanup procedure within one hour of spill discovery/occurrence, or

b. If, in the Government's judgment, the Contractor's spill cleanup is not adequately abating life threatening situation and/or is a threat to any body of water or environmentally sensitive areas.

3.12 CONTROL AND MANAGEMENT OF HAZARDOUS WASTES

At the time of the pre construction conference the Contractor will be briefed and provided written information regarding hazardous waste management. The Government will provide technical and oversight assistance in all aspects of hazardous waste management.

3.12.1 General

All hazardous wastes generated within the confines of the Shipyard shall be disposed of by the Government. Accordingly, all hazardous wastes generated by the Contractor to accomplish requirements of this contract shall be considered Government-generated, and shall be disposed of by the Government. Contractor shall not bring hazardous wastes onto Government property. Hazardous wastes shall be handled in compliance with 40 CFR 260-268, 273, 279 and State of Maine MEDEP Regulations Chapter 850 to 855. For hazardous waste spills, the Contractor shall call the Shipyard Fire Department, extension 2333, immediately, then verbally notify the Contracting Officer.

3.12.2 Containers

Contractor shall use only Government-furnished, Government-labeled containers for the packaging of hazardous soils and wastes. Containers will be delivered to the Contractor's work area following receipt and approval of the Management Plan required above.

a. Contractor shall segregate hazardous and non-hazardous soils/wastes. Hazardous soils/wastes shall be placed into containers provided by the Government. Full containers shall be turned over to the Government at Building 357 (Code 106.3). While hazardous soils/wastes are in the control of the Contractor, such hazardous soils/wastes shall be handled in accordance with Shipyard requirements.

b. Notify the Contracting Officer or the designated representative daily to ensure containers of hazardous and universal wastes are secured by the Government prior to the end of the shift or as arranged and approved by Code 106. All hazardous wastes shall be placed in a Government approved hazardous waste satellite accumulation area or turned over directly to Building 357. Prior to Government acceptance of the containers, the Contractor shall provide the certification required by the "Submittals" paragraph of this Section, and such additional information regarding contents of the containers as may be required by the Government representative for proper classification of the wastes.

3.12.3 Facility Hazardous Waste Generator Status

Portsmouth Naval Shipyard is designated as a Large Quantity Generator. All work conducted within the boundaries of the Shipyard must meet the regulatory requirements of this generator designation. The Contractor shall comply with all provisions of Federal, State and local regulatory requirements applicable to this generator status regarding training and storage, handling, and disposal of all construction derived wastes.

3.12.4 Hazardous Waste/Debris Management

Identify all construction activities which will generate hazardous waste/debris and universal wastes. Provide a documented waste determination for all resultant waste streams. Hazardous waste/debris will be identified, labeled, handled, stored, and disposed of in accordance with all Federal, State, and local regulations including 40 CFR 261, 40 CFR 262, 40 CFR 263, 40 CFR 264, 40 CFR 265, 40 CFR 266, and 40 CFR 268.

Hazardous wastes and universal wastes will also be managed in accordance with the approved Hazardous Waste Management Section of the Environmental Protection Plan. Daily worksite accumulation of hazardous wastes and universal wastes shall be in approved containers in accordance with 49 CFR 173 and 49 CFR 178. Hazardous waste generated within the confines of Government facilities will be identified as being generated by the Government.

Prior to removal of any hazardous waste from Government property, all hazardous waste manifests must be signed by Shipyard personnel from the Shipyard Environmental Office. No hazardous waste will be brought onto Government property. Provide to the Contracting Officer a copy of waste determination documentation for any solid waste streams that have any potential to be hazardous waste or contain any chemical constituents listed in 40 CFR 372-SUBPART D. For hazardous wastes spills, verbally notify the Contracting Officer immediately.

3.12.4.1 Regulated Waste Storage/Satellite Accumulation/90 Day Storage Areas

If the work requires the temporary storage/collection of regulated or hazardous wastes, the Contractor will request the establishment of a Regulated Waste Storage Area, a Satellite Accumulation Area, or a 90 Day Storage Area at the point of generation.

The Contractor must submit a request in writing to the Contracting Officer providing the following information:

Contract Number	_____	Contractor	_____
Haz/Waste or Regulated Waste POC	_____	Phone Number	_____
Type of Waste	_____	Source of Waste	_____
Emergency POC	_____	Phone Number	_____

Location of the Site: _____
(Attach Site Plan to the Request)

Attach a waste determination form. Allow ten working days for processing this request. The designated area where waste is being stored shall be

barricaded and a sign identifying as follows:

"DANGER - UNAUTHORIZED PERSONNEL KEEP OUT"

3.12.4.2 Sampling and Analysis of HW

a. Waste Sampling

Sample waste in accordance with Navy Environmental Compliance Sampling and Field Testing Procedures Manual, NAVSEA T0300-AZ-PRO-010, 01 April 2013. Each sampled drum or container will be clearly marked with the Contractor's identification number and cross referenced to the chemical analysis performed; sampling shall be in accordance with NAVSHIPY PTSMH INST 5090.8 B.

b. Laboratory Analysis

Follow the analytical procedure and methods in accordance with the EP-SLU-846. The Contractor will provide all analytical results and reports performed to the Contracting Officer, and Code 106.3 Environmental Sampling Project Manager.

All laboratory analysis for hazardous waste identification must be performed by a laboratory complaint with OPNAVINST 5090.1 Chapter 7-3.3. Proof of compliance must be made available upon request. All analyses provided by laboratories that are not compliant with the stated requirements will be rejected.

c. Analysis Type

Identify waste material/hazardous waste by analyzing for properties that are reasonably suspected of the waste. Soil and other materials may require specific analysis for acceptance to a disposal facility - please check with personnel at the HWSF before choosing parameters.

3.12.4.3 Asbestos Certification

Items, components, or materials disturbed by or included in work under this contract may involve asbestos. Other materials in the general area around where work will be performed may contain asbestos. All thermal insulation, in all work areas, should be considered to be asbestos unless positively identified by conspicuous tags or previous laboratory analysis certifying them as asbestos free.

Inadvertent discovery of non-disclosed asbestos that will result in an abatement action requires a change in scope before proceeding. Upon discovery of asbestos containing material not identified in the contract documents, the Contractor shall immediately stop all work that would generate further damage to the material, evacuate the asbestos exposed area, and notify the Contracting Officer for resolution of the situation prior to resuming normal work activities in the affected area. The Contractor will not remove or perform work on any asbestos containing materials without the prior approval of the Contracting Officer. The Contractor will not engage in any activity, which would remove or damage such materials or cause the generation of fibers from such materials.

Asbestos containing waste shall be managed and disposed of in accordance with applicable environmental law. Asbestos containing waste shall be

manifested and the manifest provided to the Contracting Officer. Disposal of asbestos-containing waste must be coordinated with the Navy.

3.12.4.4 Hazardous Waste Disposal

Control of stored waste, packaging, sampling, analysis, and disposal will be determined by the details in the contract. The requirements for jobs in the following paragraphs will be used as the guidelines for disposal of any hazardous waste generated.

a. Responsibilities for Contractor's Disposal

Contractor responsibilities include any generation of WHM/HW requiring Contractor disposal of solid waste or liquid.

(1) The Contractor agrees to provide all service necessary for the final treatment/disposal of the hazardous material/waste in accordance with all local, State and Federal laws and regulations, and the terms and conditions of the contract within sixty (60) days after the materials have been generated. These services will include all necessary personnel, labor, transportation, packaging, detailed analysis (if required for disposal, and/or transportation, including manifesting or completing waste profile sheets, equipment, and the compilation of all documentation is required).

(2) Contain all waste in accordance with 40 CFR 260, 40 CFR 261, 40 CFR 262, 40 CFR 263, 40 CFR 264, 40 CFR 265, 40 CFR 266, 40 CFR 268, 40 CFR 270, 40 CFR 272, 40 CFR 273, 40 CFR 279, 40 CFR 280, and 40 CFR 761.

(3) Obtaining a representative sample of the material generated for each job done to provide waste stream determination.

(4) Analyzing for each sample taken and providing analytical results to the Contracting Officer. Provide two copies of the results.

(5) Determine the DOT proper shipping names for all waste (each container requiring disposal) and will demonstrate how this determination is developed and supported by the sampling and analysis requirements contained herein to the Contracting Officer.

Contractor Disposal Turn-In Requirements

For any waste hazardous materials or hazardous waste generated which requires the Contractor to dispose of, the following conditions must be complied with in order to be acceptable for disposal:

a. Drums compatible with waste contents and drums meet DOT requirements for 49 CFR 173 for transportation of materials.

b. Drums banded to wooden pallets. No more than three (3) 55 gallon drums to a pallet, or two (2) 85 gallon over packs.

c. Band using 1-1/4 inch minimum band on upper third of drum.

d. Recovery materials label (provided by Code 106.321) located in middle of drum, filled out to indicate actual volume of material, name of material manufacturer, other vendor information as available.

e. Always have three (3) to five (5) inches of empty space above volume of material. This space is called 'outage'.

f. Provide disposal documentation for hazardous and regulated waste.

3.12.5 Class I ODS Prohibition

Class I ODS as defined herein will not be used in the performance of this contract, nor be provided as part of the equipment. This prohibition will be considered to prevail over any other provision, specification, drawing, or referenced documents. Regulations related to the protection of stratosphere ozone may be found in 40 CFR 82.

Heating and air conditioning technicians must be certified through an EPA-approved program. Copies of certifications shall be maintained at the employees' place of business and be carried as a wallet card by the technician, as provided by environmental law. Accidental venting of a refrigerant is a release and shall be reported to the Contracting Officer.

3.12.5.1 Universal Waste/e-Waste Management

Universal waste including but not limited to some mercury containing building products such florescent lamps, mercury vapor lamps, high pressure sodium lamps, CRTs, batteries, aerosol paint containers, electrical equipment containing PCBs, and consumed electronic devices, shall be managed in accordance with applicable environmental law.

3.13 ABRASIVE AND/OR WET BLASTING

3.13.1 Blasting Operations

(a) Abrasive Blasting

The use of silica sand is prohibited in sandblasting.

Provide tarpaulin drop cloths and windscreens to enclose abrasive blasting operations to confine and collect dust, abrasive, agent, paint chips, and other debris.

Abrasive blasting shall take place in containments with emissions vented through bag house filters and emissions shall be limited to 10% opacity on a six minute block average. The bag houses must be used to control PM emission and operated properly at all times abrasive blasting is being performed.

(b) Wet Blasting

The use of wet blasting requires the capture and proper disposal of all wastes, including the blasting water, associated with the process.

3.13.2 Disposal Requirements

Submit analytical results of the wastes and/or debris generated from blasting operations per paragraph entitled Laboratory Analysis of this section. Hazardous waste generated from blasting operations will be managed in accordance with paragraph entitled "Hazardous Waste/Debris Management" of this section and with the approved HWMP. Concrete wash water and oily waste generated from blasting operations will be disposed of

in accordance with the policy outlined in these specifications.

3.14 SPRAY PAINTING

3.14.1 Spray Painting Operations

Spray painting operations shall take place in containment. Emissions from spray painting shall vent through air filters and are limited to 10% opacity on a six minute block average. The air filters are used to control particulate emissions.

3.15 NOISE

Make the maximum use of low-noise emission products, as certified by the EPA or sound deadening enclosures to limit noise within the project site. Blasting or the use of explosives will not be permitted. Confine any operations that may generate excessive noise to the period between 7 a.m. and 5 p.m., Monday through Friday, exclusive of holidays, unless otherwise specified or approved by the Contracting Officer. The maximum permissible sound pressure levels, as measured at the limits of the Navy Property boundary, shall not exceed the maximum noise levels as specified in the Town of Kittery's Ordinance and all applicable OHSA Regulations.

3.16 MERCURY MATERIALS

Mercury is prohibited in the construction of this facility, unless specified otherwise, and with the exception of mercury vapor lamps and fluorescent lamps. Dumping of mercury-containing materials and devices such as mercury vapor lamps, fluorescent lamps, and mercury switches, in rubbish containers is prohibited. Remove without breaking, pack to prevent breakage, and transport out of the activity in an unbroken condition for disposal as directed. Immediately report to the Shipyard Environmental Office and the Contracting Officer instances of breakage or mercury spillage. Clean mercury spill area to the satisfaction of the Contracting Officer. Cleanup of a mercury spill shall not be recycled and shall be managed as a hazardous waste for disposal.

3.17 CONCRETE WASH WATER

Concrete wash water shall be defined as water, pressure washing water, or storm water that has come into contact with cement, uncured concrete, concrete dust or other material of a similar nature generated during construction activities including, but not limited to, washing down ready-mix trucks, mixers and wheelbarrows, pre casting equipment, forms, manufactured cast concrete sections, tools, concrete areas; masonry cutting operations; cleaning up of split mortar or block fill; hosing away excess materials.

Water or storm water that has come into contact with pre casting equipment, forms, tools, etc which have been subjected to oil based form release agents will be considered an oily waste if a visual inspection indicates any signs of oil residual. Oily wastes shall be collected and disposed of in accordance with Shipyard policy.

3.17.1 Pollution Prevention

Store dry and wet concrete supplies under cover away from drainage areas. Concrete wash water shall not be released to the storm drain system, sewer system, roadways or other uncontained impervious surfaces, or to natural

waterways including the Piscataqua River and its tributaries. Contractor shall take all precautions necessary to prevent rainwater or stormwater runoff to come in contact with concrete wash water. Divert clean stormwater and roof runoff from contact with concrete wash water. Contractor shall take all measures necessary to minimize the volume of concrete wash water generated. Contractor shall protect all waterways, catch basins and storm drain structures from potential discharges of concrete wash water. Contractor shall collect and control concrete wash water separately from waste water determined to be oily waste.

3.17.2 On-Shipyard Disposal

Small volumes of concrete wash water generated can be disposed on-site under certain conditions when approved by the Contracting Officer. When approved, small volumes of concrete wash water can be directed onto an area of open soil such as a trench or shallow pit to allow it to be absorbed and neutralized by the soil. The area shall be constantly monitored during filling operations to prevent overflow.

3.17.3 On-Shipyard Containment Structures

Concrete wash water shall be gathered and contained on site for removal and disposal at a facility designed and approved for disposal of concrete wash water. Under no circumstances shall clean water be added to concrete wash water for dilution purposes or any other reason. Containment structures shall be watertight and provide adequate freeboard to contain the wash water, solids, and rainfall to prevent overflow. Cover wash out structures prior to predicted rainfall events to prevent rainfall from entering the containment structure. Ensure that concrete washout containers are watertight and are designed to promote evaporation. Washout shall occur in designated areas only that have been approved by the Contracting Officer Representative.

Inspect all concrete washout facilities daily to determine filled capacity. Remove all materials from containment structures when 75% fill capacity has been reached. Remove liquids or cover structures before predicted rainstorms to prevent overflows and infiltration of rainwater. Inspect structures for holes and tears daily and repair to maintain watertight conditions.

Hardened solids can be removed from containment structures and recycled, reused, or disposed of per regulatory requirements. Liquids remaining in the containment structure shall be vacuumed and disposed of at a facility designated for disposal of concrete wash water.

3.17.4 Off-Shipyard Disposal

Contractor shall provide careful oversight to prevent improper dumping of concrete wash water. Contractor shall ensure companies use proper disposal facilities designated for concrete wash water disposal. The Contractor shall be responsible for any clean up resulting from improper control of concrete wash water.

3.18 DISPOSAL OF CHLORINATED WATER AND DECHLORINATION REQUIREMENTS

Chlorinated water created during disinfection procedures shall not be directly discharged to storm drains or sanitary sewers without prior dechlorination. Chlorinated water shall be neutralized by the controlled addition of a reducing chemical such as sodium thiosulfate, sodium

bisulfate, sodium sulfite, sulfur dioxide or ascorbic acid (commonly known as Vitamin C). Dechlorination shall be sufficiently effective to reduce total residual chlorine concentration to existing water system chlorine levels (typically 1.2 to 1.5 mg/l).

-- End of Section --

SECTION 01 74 19.00 22

CONSTRUCTION AND DEMOLITION WASTE MANAGEMENT (PWD ME)
04/15

PART 1 GENERAL

1.1 GOVERNMENT POLICY

Government policy is to apply sound environmental principles in the design, construction and use of facilities. As part of the implementation of that policy the Contractor shall: (1) practice efficient waste management when sizing, cutting, and installing products and materials and (2) use all reasonable means to divert construction and demolition waste from landfills and incinerators and to facilitate their recycling or reuse.

1.2 SUBMITTALS

Government approval is required for submittals with a "G" designation; submittals not having a "G" designation are for Contractor Quality Control approval. Submit the following in accordance with [Section 01 33 00 SUBMITTAL PROCEDURES] [for Design-Bid-Build projects] [Section 01 33 10.05 20 DESIGN SUBMITTAL PROCEDURES and Section 01 33 00.05 20 CONSTRUCTION SUBMITTAL PROCEDURES] [for Design-Build projects]:

SD-01 Preconstruction Submittals

Waste Management Plan; G

SD-11 Closeout Submittals

Records; G

1.3 WASTE MANAGEMENT PLAN

A waste management plan shall be submitted within 15 calendar days after contract award and prior to initiating any site preparation work. The plan shall include the following:

a. Name of individuals on the Contractor's staff responsible for waste prevention and management.

b. Actions that will be taken to reduce solid waste generation, including coordination with subcontractors to ensure awareness and participation.

c. Description of the regular meetings to be held to address waste management.

d. Description of the specific approaches to be used in recycling/reuse of the various materials generated, including the areas and equipment to be used for processing, sorting, and temporary storage of wastes.

e. Characterization, including estimated types and quantities, of the waste to be generated.

f. Actions that will be taken to divert at least 50% of the non-hazardous solid wastes (including waste from construction and demolition operations) from the waste stream. Report actual diversion rates during construction and demolition.

g. Name of landfill and/or incinerator to be used and the estimated costs for use, assuming that there would be no salvage or recycling on the project.

h. Identification of local and regional reuse programs, including non-profit organizations such as schools, local housing agencies, and organizations that accept used materials such as materials exchange networks and Habitat for Humanity. Include the name, location, and phone number for each reuse facility to be used, and provide a copy of the permit or license for each facility.

i. List of specific waste materials that will be salvaged for resale, salvaged and reused on the current project, salvaged and stored for reuse on a future project, or recycled. Recycling facilities that will be used shall be identified by name, location, and phone number, including a copy of the permit or license for each facility. Provide percentage of non-hazardous construction and demolition waste materials that have been diverted from the waste stream.

j. Identification of materials that cannot be recycled/reused with an explanation or justification, to be approved by the Contracting Officer.

k. Description of the means by which any waste materials identified in item (i) above will be protected from contamination.

k. Anticipated net cost savings determined by subtracting Contractor program management costs and the cost of disposal from the revenue generated by sale of the materials and the incineration and/or landfill cost avoidance.

l. Description of the means of transportation of the recyclable materials (whether materials will be site-separated and self-hauled to designated centers, or whether mixed materials will be collected by a waste hauler and removed from the site).

1.4 RECORDS

Records shall be maintained to document the quantity of waste generated; the quantity of waste diverted through sale, reuse, or recycling; and the quantity of waste disposed by landfill or incineration. Quantities may be measured by weight or by volume, but must be consistent throughout. List each type of waste separately noting the disposal or diversion date. Identify the landfill, recycling center, waste processor, or other organization used to process or receive the solid waste. Provide explanations for any waste not recycled or reused. With each application for payment, submit updated documentation for solid waste disposal and diversion, and submit manifests, weight tickets, receipts, and invoices specifically identifying the project and waste material. The records shall be made available to the Contracting Officer during construction, and a copy of the records shall be delivered to the Contracting Officer upon completion of the construction.

1.5 DISPOSAL

Except as otherwise specified in other sections of the specifications, disposal shall be in accordance with the following:

1.5.1 Reuse

First consideration shall be given to salvage for reuse since little or no re-processing is necessary for this method, and less pollution is created when items are reused in their original form. Sale or donation of waste suitable for reuse shall be considered. Salvaged materials, other than those specified in other sections to be salvaged and reinstalled, shall not be used in this project.

1.5.2 Recycle

Waste materials not suitable for reuse, but having value as being recyclable, shall be made available for recycling whenever economically feasible.

1.5.3 Waste

Materials with no practical use or economic benefit shall be disposed at a landfill or incinerator.

1.6 Additional Reporting and Recording Requirements

Provide monthly cost and revenue data to the NAVFAC Midlant Integrated Solid Waste Management office. The report shall be submitted by e-mail to:
IntegratedSolidWasteManagement@navy.mil
no later than the 3rd of each month. Data shall be reported on an excel document provided by the Contracting Officer. Comply with the requirements specified in Appendix 01 74 19-1, "Construction and Demolition Solid Waste Report".

PART 2 PRODUCTS

Not used.

PART 3 EXECUTION

Not used.

-- End of section --

SECTION 01 75 00

STARTING AND ADJUSTING
05/15

PART 1 GENERAL

1.1 SUMMARY

Requirements of this Section apply to, and are a component part of, each section of the specifications.

1.2 SUBMITTALS

Government approval is required for submittals with a "G" designation; submittals not having a "G" designation are for Contractor Quality Control approval. Submit the following in accordance with Section 01 33 00 SUBMITTAL PROCEDURES:

SD-01 Preconstruction Submittals

Verification of Prior Experience; G

Documentation of Manufacturer's Prior Experience; G

Quality Control Plan; G

SD-02 Shop Drawings

Drawings, Diagrams and Schedules; G

Diagrams and Instructions; G

Coordination Drawings; G

SD-03 Product Data

Catalog Cuts; G

Manufacturer's Sample Warranty; G

Samples of Warranty Language; G

SD-05 Design Data

Design Calculations; G

SD-06 Test Reports

Factory Tests; G

Functional Field Test; G

Final Acceptance Test,; G

Test Procedures; G

SD-07 Certificates

Qualification of Manufacturer; G

Qualification of Installer; G

United States Manufacture; G

SD-08 Manufacturer's Instructions

Manufacturer's Administrative Requirements; G

Demonstration and Training Information; G

Manufacturer's Procedural Requirements; G

SD-09 Manufacturer's Field Reports

Documentation of the Testing and Verification Actions; G

SD-10 Operation and Maintenance Data

Operation and Maintenance Data; G

Safety and Security Data or Posters; G

Comply with the requirements specified in Section 01 78 23 OPERATION AND MAINTENANCE DATA for O&M Data format. Refer to Section 01 78 24.00 20 FACILITY ELECTRONIC OPERATION AND MAINTENANCE SUPPORT INFORMATION (eOMSI) for additional requirements.

1.2.1 Preconstruction and Pre-Testing Requirements

Deliver equipment and services required by the specifications. Ensure all equipment is free of latent manufacturing and installation defects. The Government reserves the option to elect performance of acceptance testing by internal personnel, or a designated third party. Regardless of who performs the acceptance testing, ensure the requirements of acceptance are met.

Submit the following for review and approval prior to the commencement of work and any testing, whether such testing is on site or elsewhere:

a. Verification of prior experience and expertise with similar project scope

b. Documentation of manufacturer's prior experience and expertise with similar project materials and systems

c. Quality control plan

d. Manufacturer's sample warranty and operation and maintenance data, with details regarding start-up procedures

e. Manufacturer's administrative requirements

f. Manufacturer's procedural requirements

g. Demonstration and training information

Submit the following certifications:

a. Provide evidence that products used within this specification are United States manufacture.

b. Qualification of manufacturer, including current licenses and insurance.

c. Qualification of installer, including licenses and insurance.

1.2.2 Shop Drawings and Diagrams

Submit the following shop drawings, record drawings, and diagrams as required to correctly execute the installation of the work:

a. Drawings, diagrams and schedules specifically prepared to illustrate some portion of the work

b. Diagrams and instructions from a manufacturer or fabricator for use in producing the product and as aids for integrating the product or system into the project

c. Coordination drawings to show how multiple systems and interdisciplinary work will be coordinated

1.2.3 Product and Design Data

Submit all product data and any design calculations, mix designs, analyses or other data pertaining to a part of work to ensure a complete functional installation; including, but not limited to:

a. Catalog cuts, illustrations, schedules, diagrams, performance charts, instructions and brochures illustrating size, physical appearance and other characteristics of materials, systems or equipment for some portion of the work

b. Samples of warranty language when the contract requires extended or no dollar limit product warranties

c. Operation and maintenance data provided by the manufacturer to ensure the safe and efficient operation, maintenance and repair of the system or equipment provided

d. Safety and security data or posters provided by the manufacturer to be posted in a conspicuous visible location for operational and maintenance personnel

1.2.4 Tests Required

Electrical switchgear, protective relaying, condition/performance monitoring systems, energy control and monitoring systems, and other assemblies and components that need to be tested as an interrelated whole.

1.2.4.1 Factory Tests

Submit certified copies of required tests performed at the factory to verify proper build. These test results will be used in the "Final Acceptance Test" section to verify no shipping damage and proper installation.

1.2.4.2 Test Procedures

Submit test procedure and recording forms that document the test steps for approval to the Contracting Officer 21 calendar days prior to the proposed test date. Ensure procedures clearly state step by step instruction to verify system parameters, components, and functions.

1.2.4.3 Functional Field Test

Perform functional field tests test to verify that the system and components have been properly installed and are functioning properly. Perform test(s) in the presence of the Contracting Officer. Acceptance will be issued when system has performed per other sections and referenced industry standards.

Coordinate and submit documentation of the testing and verification actions taken by manufacturer's representative at the job site, on a portion of the work, during installation, to confirm compliance with manufacturer's standards or instructions.

1.2.4.4 Final Acceptance Test

Perform a formal test with full documentation using the approved recording form. Contracting Officer will witness this test and issue a written final acceptance. Provide final test data to the Contracting Officer with a cover letter clearly marked with the system name, date, and the words " Final Test Data - Forward to the Systems Engineer/Condition Monitoring Office/Predictive Testing Group for inclusion in the Maintenance Database."

PART 2 PRODUCTS

Not used.

PART 3 EXECUTION

Not used.

-- End of Section --

SECTION 01 78 00.00 22

CLOSEOUT SUBMITTALS (PWD ME)
07/15

PART 1 GENERAL

1.1 REFERENCES

The publications listed below form a part of this specification to the extent referenced. The publications are referred to within the text by the basic designation only.

ASTM INTERNATIONAL (ASTM)

ASTM E 1971	(2005) Stewardship for the Cleaning of Commercial and Institutional Buildings

GREEN SEAL (GS)

GS-37	(2000; R 2005) Industrial and Institutional Cleaners

U.S. DEPARTMENT OF DEFENSE (DOD)

UFC 1-300-08	(2009, with Change 2) Criteria for Transfer and Acceptance of DoD Real Property

1.2 SUBMITTALS

Government approval is required for submittals with a "G" designation; submittals not having a "G" designation are for Contractor Quality Control approval. Submit the following in accordance with Section 01 33 00 SUBMITTAL PROCEDURES:

SD-03 Product Data

As-Built Record of Equipment and Materials; G

Two (2) paper copies and one pdf copy of the record listing the as-built materials and equipment incorporated into the construction of the project.

Warranty Management Plan; G

One paper and one pdf set of the warranty management plan containing information relevant to the warranty of materials and equipment incorporated into the construction project, including the starting date of warranty of construction. Furnish with each warranty the name, address, and telephone number of each of the guarantor's representatives nearest to the project location.

Warranty Tags; G

Two (2) paper record copies and one pdf copy of the warranty

tags showing the layout and design.

Final Cleaning; G

Two (2) copies of the listing of completed final clean-up items.

Spare Parts Data; G

Two (2) paper copies and one pdf copy of the list that indicates manufacturer's name, part number, nomenclature, and stock level recommended for maintenance and repair. List those items that may be standard to the normal maintenance of the system.

SD-08 Manufacturer's Instructions

Preventative Maintenance; G and Condition Monitoring (Predictive Testing); G and Inspection; G schedules with instructions that state when systems should be retested.

Define within the schedule the anticipated length of each test, test apparatus, number of personnel identified by responsibility, and a testing validation procedure permitting the record operation capability requirements. On each test feature; e.g., gpm, rpm, psi, provide a signoff blank for the Contractor and Contracting Officer. Within a remarks column of the testing validation procedure include references to operating limits of time, pressure, temperature, volume, voltage, current, acceleration, velocity, alignment, calibration, adjustments, cleaning, or special system notes. Delineate procedures for preventative maintenance, condition monitoring (predictive testing) and inspection, adjustment, lubrication and cleaning necessary to prevent failure.

Posted Instructions; G

SD-10 Operation and Maintenance Data

Submit Operation and Maintenance Manuals; G in accordance with paragraph entitled, "Operation and Maintenance Manuals," of this section. Submit two (2) paper copies, and two (2) pdf copies on CD -Rom.

Comply with the requirements specified in Section 01 78 23 OPERATION AND MAINTENANCE DATA for O&M Data format. Refer to Section 01 78 24.00 20 FACILITY ELECTRONIC OPERATION AND MAINTENANCE SUPPORT INFORMATION (eOMSI) for additional requirements.

SD-11 Closeout Submittals

Record Drawings; G

Drawings showing final as-built conditions of the project. The final CADD record drawings must consist of one set of electronic CADD drawing files in the specified electronic format saved on a CD, one set of mylar drawings, 2 sets of blue-line prints of the mylars, and one set of the approved working Record drawings.

Certification of EPA Designated Items; G

Interim Form DD1354; G
Checklist for Form DD1354; G
NAVFAC Sustainable & Energy Data Record Card; G
Certification of EPA Designated Items; G
Red Zone Documents per Section 01 30 00; G

1.3 PROJECT RECORD DOCUMENTS

1.3.1 Record Drawings

This paragraph covers Record Drawings complete, as a requirement of the contract. The terms "drawings," "contract drawings," "drawing files," "working as-built record drawings," and "final record drawings" refer to contract drawings (hard copy and CADD) which are revised to be used for final record drawings reflecting current project as-built conditions.

1.3.1.1 Government Furnished Materials

One set of electronic CADD files in the specified software and format of the contract drawings will be provided by the Government at the preconstruction conference for projects requiring Final Record Drawings in CADD format.

1.3.1.2 Working Record and Final Record Drawings

Revise 2 sets of hard copy paper contract drawings by red-line process described herein to reflect the current as-built conditions during the prosecution of the project. The Contractor shall keep the working as-built drawings current and shall keep at least one set available on the jobsite for review at all times. Changes from the contract plans which are made in the work or additional information which might be uncovered in the course of construction must be accurately and neatly recorded as they occur by means of details and notes. After the completion of each definable feature of work as listed in the Contractor Quality Control Plan (Foundations, Utilities, Structural Steel, etc., as appropriate for the project) provide (1) set of working as-built drawings (CADD) in the specified software and format hard copy and electronic to the Contracting Officer. The working as-built drawings, hard copy and (CADD), will be jointly reviewed for accuracy, completeness and format by the Contracting Officer and the Contractor prior to submission of each monthly pay estimate. If the Contractor fails to maintain the working as-built drawings, hard copy and (CADD) as specified herein, the Contracting Officer will deduct from the monthly progress payment an amount representing the estimated cost of maintaining the record drawings. This monthly deduction will continue until an agreement can be reached between the Contracting Officer and the Contractor regarding the accuracy and completeness of updated drawings. Items to be shown on the working as-built drawings, hard copy and (CADD) are, but are not limited to, the following information:

a. The actual location (horizontal and vertical position based on Shipyard datums), kinds and sizes of all sub-surface utility lines. In order that the location of these lines and appurtenances may be determined in the event the surface openings or indicators become covered over or obscured, as a back-up to the horizontal and vertical position, feature shall also be shown by offset dimensions to two permanently fixed surface features the end of each run including each change in direction. Locate valves, splice boxes and similar appurtenances by dimensioning along the utility run from a reference point. Also record the average depth below the surface of each run of pipe, fittings,

valves, etc.

b. The actual location (horizontal and vertical position based on Shipyard datums), kind and size of any sub-surface feature uncovered not accurately represented on the contract drawings.

c. The location and dimensions of any changes within the building structure.

d. Changes in grade, elevations, cross section, or alignment of roads, earthwork, structures or utilities.

e. Changes in details of design or additional information obtained from working drawings specified to be prepared and/or furnished by the Contractor; including, but not limited to, fabrication, erection, installation plans and placing details, pipe sizes, insulation material, dimensions of equipment foundations, etc.

f. The topography, invert elevations and grades of drainage installed or affected as part of the project construction.

g. Changes or modifications which result from the final inspection.

h. Where contract drawings or specifications present options, identify the option selected for construction on the working as-built prints.

i. If borrow material for this project is from sources on Government property, or if Government property is used as a spoil area, furnish a contour map of the final borrow pit/spoil area elevations.

j. Systems designed or enhanced by the Contractor, such as HVAC controls, fire alarm, fire sprinkler, and irrigation systems.

k. Modifications (include within change order price the cost to change working and final record drawings to reflect modifications) and compliance with the following procedures:

(1) Both sets of the hard copy paper contract working as-built drawings must be neat, legible and accurate. Any drawings damaged, lost or corrupted by the Contractor must be satisfactorily replaced by the Contractor at no expense to the Government.

(2) For text deletions/revisions; strikeout existing drawing text with a single line as to not obscure or make the original text unreadable. Place the new text adjacent, clearly annotating the intent of the change.

(3) For line work; strikeout entities with parallel lines drawn at 45 degrees to the object, not to obscure or make the original object unreadable. Place the new object in its correct location and clearly annotate the intent of the change.

(4) Place a Revision Symbol at the location of each modification on the drawing sheet along with descriptive annotations of the revision.

(5) For details, sections or schedules which are added to a drawing sheet, place a Revision Symbol by the detail, section or schedule

title.

(6) For major changes to a drawing, place a Revision Symbol by the title of the affected plan, section, or detail at each location.

(7) For changes within schedules, place a Revision Symbol by the change in the schedule.

(8) The Revision Symbol shall be a Delta sized to allow for a capital letter to fit within. The letter shall have a height of not less than 1/8-inch when plotted.

(9) The revision symbol letter shall be consistent for all drawing modifications for each monthly billing cycle. Drawing modifications for the first monthly bill cycle shall be designated as "A" for all modifications throughout the drawing package. The next month's revisions shall be designated as "B" throughout the drawing package, and so on.

1.3.1.3 Drawing Preparation

At project completion, provide 2 sets of the approved hard copy paper contract drawings modified to reflect the final as-built conditions of the project to the Contracting Officer. Modify the contract drawings as necessary to correctly show the features of the project as it has been constructed by bringing the contract drawings into agreement with the second set of approved working as-built drawings. The second set of approved working as-built drawings are also part of the permanent records of this project and must be returned to the Contracting Officer after final approval of the Record Drawings by the Government. Any drawings or drawing files damaged, lost or corrupted by the Contractor must be satisfactorily replaced by the Contractor at no expense to the Government.

1.3.1.4 Computer Aided Design and Drafting (CADD) Drawings

Only employ personnel proficient in the preparation of CADD drawings to modify the contract drawings or prepare any additional drawings sheets required. Modifications, to the Record Drawings must be equal in quality and detail to that of the original contract drawings. Line colors, line weights, lettering, layering conventions, and symbols shall remain consistent throughout the record drawing set, regardless of either as-built or record drawing. The Contractor shall modify the original contract drawing files to reflect the construction contract as-built conditions reviewed and accepted by **the Contracting Officer.** Each as-built condition added to a drawing file shall be encapsulated by a closed polygon or "revision cloud. A revision symbol shall be placed outside the "revision cloud" with the appropriate letter designating the revision sequence. The Contractor shall annotate in the "revision block" of each drawing file modified as to the type of revisions made to the drawing file. The contract drawings are to be edited to reflect the as-built conditions only. No part of the original drawings shall be deleted, erased or rendered illegible. Parts of the contract drawing found to be in error or modified during construction, shall be over struck using methods described not to obscure the original drawing, and annotations will be added adjacent that clearly explain the modification, including accurate dimensions locating the feature. If additional drawings are required, the drawings shall be prepared using the specified electronic file format applying, the same graphic standards specified for original drawings. The title block and drawing border to be used for any new final record drawings shall be

identical to that used to create the contract drawings. Modifications, additions and corrections to the contract drawings shall be made to the electronic AutoCAD file(s). The Contractor shall be furnished with the original contract drawing files in the AutoCAD software format currently in use by PWD-ME. The electronic files shall be supplied on compact disc (CD). The Contractor shall provide all computer software and hardware necessary to prepare final record drawing set. The Contracting Officer shall review final record drawing set for accuracy and return them to the Contractor for required corrections, changes, additions, and deletions.

a. Provide Record Drawings (CADD) in the following format:

   (1) As-built Layering; follow original drawing layer naming conventions followed by "-AB".

   (2) Deletions (Cyan) - Over-strike deleted graphic items (lines), lettering in notes and leaders.

   (3) Additions (Cyan) - Added items, lettering in notes and leaders.

   (4) Special (Cyan) - Items requiring special information, coordination, or special detailing or detailing notes.

   (5) The Contractor shall furnish the contract record drawing files in the AutoCAD software format currently in use by PWD-ME.

b. Drawing files modified for as-built condition shall be renamed by adding an underscore and the letters "AB" to the end of the existing file name. Drawing files where no modifications were required shall be renamed by adding an underscore and the letters "RD" to the end of the existing file name.

c. When final revisions have been completed to the record drawing set, add the wording "RECORD DRAWINGS / AS-BUILT CONDITIONS" followed by the name of the Contractor in letters at least 3/16 inch high in the lower left hand corner of the cover sheet drawing. Mark all other contract drawings in the same location and manner as either "Record Drawing" denoting no revisions on the sheet or "As built Drawing" denoting modifications, additions or corrections have been made to the drawing sheet. Modify the revision block to reflect either "record drawing", for no changes or "as built drawing", for changes and date for submittal.

d. Within 20 working days after Government approval of all of the working record drawings for a phase of work, prepare the CADD electronic files for that phase of work and submit for Government review and approval. The Government will promptly return one set of prints annotated with any necessary corrections. Within 10 working days revise the CADD files accordingly at no additional cost and submit one set of final prints for the completed phase of work to the Government.

e. Within 20 working days of substantial completion of all phases of work, submit the final record drawing package for the entire project. Submit one set of electronic files on compact disc, read-only memory CD-ROM, one set of mylars and one set of the approved working record drawings. They must be complete in all details and identical in form and function to the contract drawing files supplied by the Government. Any transactions or adjustments necessary to accomplish this is the responsibility of the Contractor. The Government reserves the right to

reject any drawing files it deems incompatible with the customer's CADD system. Paper prints, drawing files and storage media submitted will become the property of the Government upon final approval. Failure to submit final record drawing files and marked prints as specified will be cause for withholding any payment due the Contractor under this contract. Approval and acceptance of final record drawings must be accomplished before final payment is made to the Contractor.

1.3.2 As-Built Record of Equipment and Materials

Furnish one copy of preliminary record of equipment and materials used on the project 15 working days prior to final inspection. This preliminary submittal will be reviewed and returned 5 working days after final inspection with Government comments. Submit two sets of final record of equipment and materials 10 working days after final inspection. Key the designations to the related area depicted on the contract drawings. List the following data:

RECORD OF DESIGNATED EQUIPMENT AND MATERIALS DATA

Description	Specification Section	Manufacturer and Catalog, Model, and Serial Number	Composition and Size	Where Used

1.3.3 Final Approved Shop Drawings

Furnish final approved project shop drawings 30 calendar days after transfer of the completed facility.

1.3.4 Construction Contract Specifications

Furnish final record (as-built) construction contract specifications, including modifications thereto, 30 calendar days after transfer of the completed facility.

1.3.5 Real Property Equipment

Furnish a list of installed equipment furnished under this contract. Include all information usually listed on manufacturer's name plate. In the "EQUIPMENT-IN-PLACE LIST" include, as applicable, the following for each piece of equipment installed: description of item, location (by room number), model number, serial number, capacity, name and address of manufacturer, name and address of equipment supplier, condition, spare parts list, manufacturer's catalog, and warranty. Furnish a draft list at time of transfer. Furnish the final list 30 calendar days after transfer of the completed facility.

1.3.6 Red Zone Documents

Submit Red Zone Documents per Section 01 30 00 ADMINISTRATIVE REQUIREMENTS (PWD ME).

1.4 SPARE PARTS DATA

Indicate manufacturer's name, part number, nomenclature, and stock level required for maintenance and repair. List those items that may be standard to the normal maintenance of the system.

Supply 2 items of each part for spare parts inventory. Provision of spare parts does not relieve the Contractor of responsibilities listed under the contract guarantee provisions.

1.5 PREVENTATIVE MAINTENANCE

Submit Preventative Maintenance and Condition Monitoring (Predictive Testing) and Inspection schedules with instructions that state when systems should be retested.

Define the anticipated length of each test, test apparatus, number of personnel identified by responsibility, and a testing validation procedure permitting the record operation capability requirements within the schedule. Provide a signoff blank for the Contractor and Contracting Officer for each test feature; e.g., gpm, rpm, psi. Include a remarks column for the testing validation procedure referencing operating limits of time, pressure, temperature, volume, voltage, current, acceleration, velocity, alignment, calibration, adjustments, cleaning, or special system notes. Delineate procedures for preventative maintenance, inspection, adjustment, lubrication and cleaning necessary to minimize corrective maintenance and repair.

Repair requirements must inform operators how to check out, troubleshoot, repair, and replace components of the system. Include electrical and mechanical schematics and diagrams and diagnostic techniques necessary to enable operation and troubleshooting of the system after acceptance.

1.6 CERTIFICATION OF EPA DESIGNATED ITEMS

Submit the Certification of EPA Designated Items as required by FAR 52.223-9, "Certification and Estimate of Percentage of Recovered Material Content for EPA Designated Items". Include on the certification form the following information: project name, project number, Contractor name, license number, Contractor address, and certification. The certification will read as follows and be signed and dated by the Contractor: "I hereby certify the information provided herein is accurate and that the requisition/procurement of all materials listed on this form comply with current EPA standards for recycled/recovered materials content. The following exemptions may apply to the non-procurement of recycled/recovered content materials:

1) The product does not meet appropriate performance standards;
2) The product is not available within a reasonable time frame;
3) The product is not available competitively (from two or more sources); and
4) The product is only available at an unreasonable price (compared with a comparable non-recycled content product)."

1.7 WARRANTY MANAGEMENT

1.7.1 Warranty Management Plan

Develop a warranty management plan which contains information relevant to the clause Warranty of Construction. At least 30 days before the planned pre-warranty conference, submit the warranty management plan for Government approval. Include within the warranty management plan all required actions and documents to assure that the Government receives all warranties to which it is entitled. The plan must be in narrative form and contain sufficient detail to render it suitable for use by future maintenance and

repair personnel, whether tradesmen, or of engineering background, not necessarily familiar with this contract. The term "status" as indicated below must include due date and whether item has been submitted or was accomplished. Warranty information made available during the construction phase must be submitted to the Contracting Officer for approval prior to each monthly pay estimate. Assemble approved information in a binder and turn over to the Government upon acceptance of the work. The construction warranty period will begin on the date of project acceptance and continue for the full product warranty period. A joint 4 month and 9 month warranty inspection will be conducted, measured from time of acceptance, by the Contractor, Contracting Officer and the Customer Representative. Include within the warranty management plan, but not limited to, the following:

a. Roles and responsibilities of all personnel associated with the warranty process, including points of contact and telephone numbers within the organizations of the Contractors, subContractors, manufacturers or suppliers involved.

b. Listing and status of delivery of all Certificates of Warranty for extended warranty items, to include roofs, HVAC balancing, pumps, motors, transformers, and for all commissioned systems such as fire protection and alarm systems, sprinkler systems, lightning protection systems, etc.

c. A list for each warranted equipment, item, feature of construction or system indicating:

    1. Name of item.
    2. Model and serial numbers.
    3. Location where installed.
    4. Name and phone numbers of manufacturers or suppliers.
    5. Names, addresses and telephone numbers of sources of spare parts.
    6. Warranties and terms of warranty. Include one-year overall warranty of construction. Items which have extended warranties must be indicated with separate warranty expiration dates.
    7. Cross-reference to warranty certificates as applicable.
    8. Starting point and duration of warranty period.
    9. Summary of maintenance procedures required to continue the warranty in force.
    10. Cross-reference to specific pertinent Operation and Maintenance manuals.
    11. Organization, names and phone numbers of persons to call for warranty service.
    12. Typical response time and repair time expected for various warranted equipment.

d. The Contractor's plans for attendance at the 4 and 9 month post-construction warranty inspections conducted by the Government.

e. Procedure and status of tagging of all equipment covered by extended warranties.

f. Copies of instructions to be posted near selected pieces of equipment where operation is critical for warranty and/or safety reasons.

1.7.2 Performance Bond

The Contractor's Performance Bond must remain effective throughout the construction period.

a. In the event the Contractor fails to commence and diligently pursue any construction warranty work required, the Contracting Officer will have the work performed by others, and after completion of the work, will charge the remaining construction warranty funds of expenses incurred by the Government while performing the work, including, but not limited to, administrative expenses.

b. In the event sufficient funds are not available to cover the construction warranty work performed by the Government at the Contractor's expense, the Contracting Officer will have the right to recoup expenses from the bonding company.

c. Following oral or written notification of required construction warranty repair work, respond in a timely manner. Written verification will follow oral instructions. Failure of the Contractor to respond will be cause for the Contracting Officer to proceed against the Contractor.

1.7.3 Pre-Warranty Conference

Prior to contract completion, and at a time designated by the Contracting Officer, meet with the Contracting Officer to develop a mutual understanding with respect to the requirements of this section. Communication procedures for Contractor notification of construction warranty defects, priorities with respect to the type of defect, reasonable time required for Contractor response, and other details deemed necessary by the Contracting Officer for the execution of the construction warranty will be established/reviewed at this meeting. In connection with these requirements and at the time of the Contractor's quality control completion inspection, furnish the name, telephone number and address of a licensed and bonded company which is authorized to initiate and pursue construction warranty work action on behalf of the Contractor. This point of contact will be located within the local service area of the warranted construction, be continuously available, and be responsive to Government inquiry on warranty work action and status. This requirement does not relieve the Contractor of any of its responsibilities in connection with other portions of this provision.

1.7.4 Warranty Tags

At the time of installation, tag each warranted item with a durable, oil and water resistant tag approved by the Contracting Officer. Attached each tag with a copper wire and spray with a silicone waterproof coating. The date of acceptance and the QC signature must remain blank until the project is accepted for beneficial occupancy. Show the following information on the tag.

a. Type of product/material_____.

b. Model number_____.

c. Serial number_____.

d. Contract number_____.

e. Warranty period_____from_____to_____.

f. Inspector's signature_____.

g. Construction Contractor_____.

Address_____.

Telephone number_____.

h. Warranty contact_____.

Address_____.

Telephone number_____.

i. Warranty response time priority code_____.

j. WARNING - PROJECT PERSONNEL TO PERFORM ONLY OPERATIONAL MAINTENANCE DURING THE WARRANTY PERIOD.

1.8 OPERATION AND MAINTENANCE MANUALS

Submit two (2) hard copies and two (2) PDF copies on CD-Rom of the project operation and maintenance manuals 30 calendar days prior to testing the system involved. Update and resubmit data for final approval no later than 30 calendar days prior to contract completion.

Comply with the requirements specified in Section 01 78 23 OPERATION AND MAINTENANCE DATA for O&M Data format. Refer to Section 01 78 24.00 20 FACILITY ELECTRONIC OPERATION AND MAINTENANCE SUPPORT INFORMATION (eOMSI) for additional requirements.

1.8.1 Configuration

Operation and Maintenance Manuals must be consistent with the manufacturer's standard brochures, schematics, printed instructions, general operating procedures, and safety precautions. Bind information in manual format and grouped by technical sections. Test data must be legible and of good quality. Light-sensitive reproduction techniques are acceptable provided finished pages are clear, legible, and not subject to fading. Pages for vendor data and manuals must have 0.3937-inch holes and be bound in 3-ring, loose-leaf binders. Organize data by separate index and tabbed sheets, in a loose-leaf binder. Binder must lie flat with printed sheets that are easy to read. Caution and warning indications must be clearly labeled.

1.8.2 Training and Instruction

Submit classroom and field instructions in the operation and maintenance of systems equipment where required by the technical provisions. These services must be directed by the Contractor, using the manufacturer's factory-trained personnel or qualified representatives. Contracting Officer will be given 7 calendar days written notice of scheduled instructional services. Instructional materials belonging to the manufacturer or vendor, such as lists, static exhibits, and visual aids, must be made available to the Contracting Officer.

1.9 CLEANUP

Provide final cleaning in accordance with ASTM E 1971 and submit two copies of the listing of completed final clean-up items. Leave premises "broom clean." Comply with GS-37 for general purpose cleaning and bathroom

cleaning. Use only nonhazardous cleaning materials, including natural cleaning materials, in the final cleanup. Clean interior and exterior glass surfaces exposed to view; remove temporary labels, stains and foreign substances; polish transparent and glossy surfaces; vacuum carpeted and soft surfaces. Clean equipment and fixtures to a sanitary condition. Replace filters of operating equipment and comply with the Indoor Air Quality (IAQ) Management Plan. Clean debris from roofs, gutters, downspouts and drainage systems. Sweep paved areas and rake clean landscaped areas. Remove waste and surplus materials, rubbish and construction facilities from the site. Recycle, salvage, and return construction and demolition waste from project in accordance with the Waste Management Plan. Promptly and legally transport and dispose of any trash. Do not burn, bury, or otherwise dispose of trash on the project site.

1.10 REAL PROPERTY RECORD

Near the completion of Project, but a minimum of 60 days prior to final acceptance of the work, complete and submit an accounting of all installed property with Interim Form DD1354 "Transfer and Acceptance of Military Real Property." Include any additional assets/improvements/alterations from the Draft DD Form 1354. Contact the Contracting Officer for any project specific information necessary to complete the DD Form 1354. Refer to UFC 1-300-08 for instruction on completing the DD Form 1354. For information purposes, a blank DD Form 1354 (fill-able) in ADOBE (PDF) may be obtained at the following web site:
http://www.dtic.mil/whs/directives/infomgt/forms/eforms/dd1354.pdf

Submit the completed Checklist for Form DD1354 of Installed Building Equipment items. Attach this list to the updated DD Form 1354.

1.11 NAVFAC SUSTAINABLE & ENERGY DATA RECORD CARD

Within 60 days of the completion of Project, complete an electronic copy of the NAVFAC Sustainable & Energy Data Record Card, and submit to the Contracting Officer. Draft Record card for this project should be available from Designer of Record (DOR) or Contracting Officer. Instructions and a blank DD Form (fill-able) in ADOBE (PDF) may be obtained at the Whole Building Design Guide web site by navigating:
Home > Participating Agencies > Department of Defense (DoD) > NAVFAC Sustainable Development Program > Contract Documents > NAVFAC Sustainable & Energy Data Record Card; or directly at
http://www.wbdg.org/pdfs/navfac_sustainable_energy_data_record_card.pdf.

PART 2 PRODUCTS

Not used.

PART 3 EXECUTION

Not used.

-- End of Section --

SECTION 01 78 23

OPERATION AND MAINTENANCE DATA
04/15

PART 1 GENERAL

1.1 REFERENCES

The publications listed below form a part of this specification to the extent referenced. The publications are referred to within the text by the basic designation only.

ASTM INTERNATIONAL (ASTM)

ASTM E1971	(2005; R 2011) Stewardship for the Cleaning of Commercial and Institutional Buildings

1.2 SUBMISSION OF OPERATION AND MAINTENANCE DATA

Submit Operation and Maintenance (O&M) Data specifically applicable to this contract and a complete and concise depiction of the provided equipment, product, or system, stressing and enhancing the importance of system interactions, troubleshooting, and long-term preventative maintenance and operation. The subcontractors must compile and prepare data and deliver to the Contractor prior to the training of Government personnel. The Contractor must compile and prepare aggregate O&M data including clarifying and updating the original sequences of operation to as-built conditions. Organize and present information in sufficient detail to clearly explain O&M requirements at the system, equipment, component, and subassembly level. Include an index preceding each submittal. Submit in accordance with this section and Section 01 33 00 SUBMITTAL PROCEDURES.

Coordinate the work of this section with Section 01 78 24.00 20 FACILITY ELECTRONIC OPERATION AND MAINTENANCE SUPPORT INFORMATION (eOMSI).

1.2.1 Package Quality

Documents must be fully legible. Poor quality copies and material with hole punches obliterating the text or drawings will not be accepted.

1.2.2 Package Content

Data package content shall be as shown in the paragraph titled "Schedule of Operation and Maintenance Data Packages." Comply with the data package requirements specified in the individual technical sections, including the content of the packages and addressing each product, component, and system designated for data package submission, except as follows. All equipment provided must use Data Package 4.

1.2.3 Changes to Submittals

Manufacturer-originated changes or revisions to submitted data must be furnished by the Contractor if a component of an item is so affected subsequent to acceptance of the O&M Data. Submit changes, additions, or revisions required by the Contracting Officer for final acceptance of submitted data within 30 calendar days of the notification of this change

requirement.

1.3 TYPES OF INFORMATION REQUIRED IN O&M DATA PACKAGES

1.3.1 Operating Instructions

Include specific instructions, procedures, and illustrations for the following phases of operation for the installed model and features of each system:

1.3.1.1 Safety Precautions

List personnel hazards and equipment or product safety precautions for all operating conditions.

1.3.1.2 Operator Prestart

Include procedures required to install, set up, and prepare each system for use.

1.3.1.3 Startup, Shutdown, and Post-Shutdown Procedures

Provide narrative description for Startup, Shutdown and Post-shutdown operating procedures including the control sequence for each procedure.

1.3.1.4 Normal Operations

Provide narrative description of Normal Operating Procedures. Include Control Diagrams with data to explain operation and control of systems and specific equipment.

1.3.1.5 Emergency Operations

Include Emergency Procedures for equipment malfunctions to permit a short period of continued operation or to shut down the equipment to prevent further damage to systems and equipment. Include Emergency Shutdown Instructions for fire, explosion, spills, or other foreseeable contingencies. Provide guidance and procedures for emergency operation of all utility systems including required valve positions, valve locations and zones or portions of systems controlled.

1.3.1.6 Operator Service Requirements

Include instructions for services to be performed by the operator such as lubrication, adjustment, inspection, and recording gage readings.

1.3.1.7 Environmental Conditions

Include a list of Environmental Conditions (temperature, humidity, and other relevant data) that are best suited for the operation of each product, component or system. Describe conditions under which the item equipment should not be allowed to run.

1.3.2 Preventive Maintenance

Include the following information for preventive and scheduled maintenance to minimize corrective maintenance and repair for the installed model and features of each system. Include potential environmental and indoor air quality impacts of recommended maintenance procedures and materials.

1.3.2.1 Lubrication Data

Include preventative maintenance lubrication data, in addition to instructions for lubrication provided under paragraph titled "Operator Service Requirements":

a. A table showing recommended lubricants for specific temperature ranges and applications.

b. Charts with a schematic diagram of the equipment showing lubrication points, recommended types and grades of lubricants, and capacities.

c. A Lubrication Schedule showing service interval frequency.

1.3.2.2 Preventive Maintenance Plan and Schedule

Include manufacturer's schedule for routine preventive maintenance, inspections, tests and adjustments required to ensure proper and economical operation and to minimize corrective maintenance. Provide manufacturer's projection of preventive maintenance work-hours on a daily, weekly, monthly, and annual basis including craft requirements by type of craft. For periodic calibrations, provide manufacturer's specified frequency and procedures for each separate operation.

1.3.2.3 Cleaning Recommendations

Provide environmentally preferable cleaning recommendations in accordance with ASTM E1971.

1.3.3 Corrective Maintenance (Repair)

Include manufacturer's recommended procedures and instructions for correcting problems and making repairs for the installed model and features of each system. Include potential environmental and indoor air quality impacts of recommended maintenance procedures and materials.

1.3.3.1 Troubleshooting Guides and Diagnostic Techniques

Include step-by-step procedures to promptly isolate the cause of typical malfunctions. Describe clearly why the checkout is performed and what conditions are to be sought. Identify tests or inspections and test equipment required to determine whether parts and equipment may be reused or require replacement.

1.3.3.2 Wiring Diagrams and Control Diagrams

Wiring diagrams and control diagrams shall be point-to-point drawings of wiring and control circuits including factory-field interfaces. Provide a complete and accurate depiction of the actual job specific wiring and control work. On diagrams, number electrical and electronic wiring and pneumatic control tubing and the terminals for each type, identically to actual installation configuration and numbering.

1.3.3.3 Maintenance and Repair Procedures

Include instructions and a list of tools required to repair or restore the product or equipment to proper condition or operating standards.

1.3.3.4 Removal and Replacement Instructions

Include step-by-step procedures and a list required tools and supplies for removal, replacement, disassembly, and assembly of components, assemblies, subassemblies, accessories, and attachments. Provide tolerances, dimensions, settings and adjustments required. Instructions shall include a combination of text and illustrations.

1.3.3.5 Spare Parts and Supply Lists

Include lists of spare parts and supplies required for maintenance and repair to ensure continued service or operation without unreasonable delays. Special consideration is required for facilities at remote locations. List spare parts and supplies that have a long lead-time to obtain.

1.3.4 Corrective Maintenance Work-Hours

Include manufacturer's projection of corrective maintenance work-hours including requirements by type of craft. Corrective maintenance that requires completion or participation of the equipment manufacturer shall be identified and tabulated separately.

1.3.5 Appendices

Provide information required below and information not specified in the preceding paragraphs but pertinent to the maintenance or operation of the product or equipment. Include the following:

1.3.5.1 Product Submittal Data

Provide a copy of all SD-03 Product Data submittals required in the applicable technical sections.

1.3.5.2 Manufacturer's Instructions

Provide a copy of all SD-08 Manufacturer's Instructions submittals required in the applicable technical sections.

1.3.5.3 O&M Submittal Data

Provide a copy of all SD-10 Operation and Maintenance Data submittals required in the applicable technical sections.

1.3.5.4 Parts Identification

Provide identification and coverage for all parts of each component, assembly, subassembly, and accessory of the end items subject to replacement. Include special hardware requirements, such as requirement to use high-strength bolts and nuts. Identify parts by make, model, serial number, and source of supply to allow reordering without further identification. Provide clear and legible illustrations, drawings, and exploded views to enable easy identification of the items. When illustrations omit the part numbers and description, both the illustrations and separate listing shall show the index, reference, or key number that will cross-reference the illustrated part to the listed part. Parts shown in the listings shall be grouped by components, assemblies, and subassemblies in accordance with the manufacturer's standard practice. Parts data may cover more than one model or series of equipment,

components, assemblies, subassemblies, attachments, or accessories, such as typically shown in a master parts catalog

1.3.5.5 Warranty Information

List and explain the various warranties and clearly identify the servicing and technical precautions prescribed by the manufacturers or contract documents in order to keep warranties in force. Include warranty information for primary components such as the compressor of air conditioning system.

1.3.5.6 Personnel Training Requirements

Provide information available from the manufacturers that is needed for use in training designated personnel to properly operate and maintain the equipment and systems.

1.3.5.7 Testing Equipment and Special Tool Information

Include information on test equipment required to perform specified tests and on special tools needed for the operation, maintenance, and repair of components.

1.3.5.8 Testing and Performance Data

Include completed prefunctional checklists, functional performance test forms, and monitoring reports. Include recommended schedule for retesting and blank test forms.

1.3.5.9 Contractor Information

Provide a list that includes the name, address, and telephone number of the General Contractor and each Subcontractor who installed the product or equipment, or system. For each item, also provide the name address and telephone number of the manufacturer's representative and service organization that can provide replacements most convenient to the project site. Provide the name, address, and telephone number of the product, equipment, and system manufacturers.

1.4 SCHEDULE OF OPERATION AND MAINTENANCE DATA PACKAGES

Furnish the O&M data packages specified in individual technical sections. The required information for each O&M data package is as follows:

1.4.1 Data Package 1

a. Safety precautions

b. Cleaning recommendations

c. Maintenance and repair procedures

d. Warranty information

e. Contractor information

f. Spare parts and supply list

1.4.2 Data Package 2

a. Safety precautions

b. Normal operations

c. Environmental conditions

d. Lubrication data

e. Preventive maintenance plan and schedule

f. Cleaning recommendations

g. Maintenance and repair procedures

h. Removal and replacement instructions

i. Spare parts and supply list

j. Parts identification

k. Warranty information

l. Contractor information

1.4.3 Data Package 3

a. Safety precautions

b. Operator prestart

c. Startup, shutdown, and post-shutdown procedures

d. Normal operations

e. Emergency operations

f. Environmental conditions

g. Lubrication data

h. Preventive maintenance plan and schedule

i. Cleaning recommendations

j. Troubleshooting guides and diagnostic techniques

k. Wiring diagrams and control diagrams

l. Maintenance and repair procedures

m. Removal and replacement instructions

n. Spare parts and supply list

o. Product submittal data

p. O&M submittal data

q. Parts identification

r. Warranty information

s. Testing equipment and special tool information

t. Testing and performance data

u. Contractor information

1.4.4 Data Package 4

a. Safety precautions

b. Operator prestart

c. Startup, shutdown, and post-shutdown procedures

d. Normal operations

e. Emergency operations

f. Operator service requirements

g. Environmental conditions

h. Lubrication data

i. Preventive maintenance plan and schedule

j. Cleaning recommendations

k. Troubleshooting guides and diagnostic techniques

l. Wiring diagrams and control diagrams

m. Maintenance and repair procedures

n. Removal and replacement instructions

o. Spare parts and supply list

p. Corrective maintenance man-hours

q. Product submittal data

r. O&M submittal data

s. Parts identification

t. Warranty information

u. Personnel training requirements

v. Testing equipment and special tool information

w. Testing and performance data

x. Contractor information

1.4.5 Data Package 5

a. Safety precautions

b. Operator prestart

c. Start-up, shutdown, and post-shutdown procedures

d. Normal operations

e. Environmental conditions

f. Preventive maintenance plan and schedule

g. Troubleshooting guides and diagnostic techniques

h. Wiring and control diagrams

i. Maintenance and repair procedures

j. Removal and replacement instructions

k. Spare parts and supply list

l. Product submittal data

m. Manufacturer's instructions

n. O&M submittal data

o. Parts identification

p. Testing equipment and special tool information

q. Warranty information

r. Testing and performance data

s. Contractor information

PART 2 PRODUCTS

Not Used

PART 3 EXECUTION

Not Used

-- End of Section --

SECTION 26 20 00

INTERIOR DISTRIBUTION SYSTEM
02/14

PART 1 GENERAL

1.1 REFERENCES

The publications listed below form a part of this specification to the extent referenced. The publications are referred to in the text by the basic designation only.

ASTM INTERNATIONAL (ASTM)

ASTM B1	(2013) Standard Specification for Hard-Drawn Copper Wire
ASTM B8	(2011) Standard Specification for Concentric-Lay-Stranded Copper Conductors, Hard, Medium-Hard, or Soft
ASTM D709	(2013) Laminated Thermosetting Materials

INSTITUTE OF ELECTRICAL AND ELECTRONICS ENGINEERS (IEEE)

IEEE 100	(2000; Archived) The Authoritative Dictionary of IEEE Standards Terms
IEEE C2	(2012; Errata 1 2012; INT 1-4 2012; Errata 2 2013; INT 5-7 2013; INT 8-10 2014; INT 11 2015) National Electrical Safety Code

NATIONAL ELECTRICAL MANUFACTURERS ASSOCIATION (NEMA)

ANSI C80.3	(2005) American National Standard for Electrical Metallic Tubing (EMT)
NEMA 250	(2014) Enclosures for Electrical Equipment (1000 Volts Maximum)
NEMA ICS 1	(2000; R 2015) Standard for Industrial Control and Systems: General Requirements
NEMA MG 1	(2014) Motors and Generators
NEMA MG 10	(2013) Energy Management Guide for Selection and Use of Fixed Frequency Medium AC Squirrel-Cage Polyphase Induction Motors
NEMA Z535.4	(2011) American National Standard for Product Safety Signs and Labels

NATIONAL FIRE PROTECTION ASSOCIATION (NFPA)

NFPA 70	(2014; AMD 1 2013; Errata 1 2013; AMD 2 2013; Errata 2 2013; AMD 3 2014; Errata

	3-4 2014; AMD 4-6 2014) National Electrical Code
NFPA 70E	(2015; ERTA 1 2015) Standard for Electrical Safety in the Workplace

U.S. NATIONAL ARCHIVES AND RECORDS ADMINISTRATION (NARA)

29 CFR 1910.147	Control of Hazardous Energy (Lock Out/Tag Out)

UNDERWRITERS LABORATORIES (UL)

UL 486A-486B	(2013; Reprint Feb 2014) Wire Connectors
UL 486C	(2013; Reprint Feb 2014) Splicing Wire Connectors
UL 489	(2013; Reprint Mar 2014) Molded-Case Circuit Breakers, Molded-Case Switches, and Circuit-Breaker Enclosures
UL 50	(2007; Reprint Apr 2012) Enclosures for Electrical Equipment, Non-environmental Considerations
UL 510	(2005; Reprint Jul 2013) Polyvinyl Chloride, Polyethylene and Rubber Insulating Tape
UL 514A	(2013) Metallic Outlet Boxes
UL 514B	(2012; Reprint Nov 2014) Conduit, Tubing and Cable Fittings
UL 514C	(2014; Reprint Dec 2014) Nonmetallic Outlet Boxes, Flush-Device Boxes, and Covers
UL 67	(2009; Reprint Apr 2015) Standard for Panelboards
UL 797	(2007; Reprint Dec 2012) Electrical Metallic Tubing -- Steel
UL 83	(2014) Thermoplastic-Insulated Wires and Cables
UL 869A	(2006) Reference Standard for Service Equipment

1.2 DEFINITIONS

Unless otherwise specified or indicated, electrical and electronics terms used in these specifications, and on the drawings, are as defined in IEEE 100.

1.3 SUBMITTALS

Government approval is required for submittals with a "G" designation; submittals not having a "G" designation are for Contractor Quality Control approval. When used, a designation following the "G" designation identifies the office that will review the submittal for the Government. Submittals with an "S" are for inclusion in the Sustainability Notebook, in conformance to Section 01 33 29 SUSTAINABILITY REPORTING. Submit the following in accordance with Section 01 33 00.

SD-02 Shop Drawings

Panelboards; G

Include wiring diagrams and installation details of equipment indicating proposed location, layout and arrangement, control panels, accessories, piping, ductwork, and other items that must be shown to ensure a coordinated installation. Identify circuit terminals on wiring diagrams and indicate the internal wiring for each item of equipment and the interconnection between each item of equipment. Indicate on the drawings adequate clearance for operation, maintenance, and replacement of operating equipment devices.

Marking strips drawings; G

SD-03 Product Data

Circuit breakers; G

Include performance and characteristic curves.

SD-06 Test Reports

600-volt wiring test; G

Grounding system test; G

SD-10 Operation and Maintenance Data

Electrical Systems, Data Package 5; G

Submit operation and maintenance data in accordance with Section 01 78 23, OPERATION AND MAINTENANCE DATA and as specified herein.

1.4 QUALITY ASSURANCE

1.4.1 Fuses

Submit coordination data as specified in paragraph, FUSES of this section.

1.4.2 Regulatory Requirements

In each of the publications referred to herein, consider the advisory provisions to be mandatory, as though the word, "shall" or "must" had been substituted for "should" wherever it appears. Interpret references in these publications to the "authority having jurisdiction," or words of similar meaning, to mean the Contracting Officer. Provide equipment, materials, installation, and workmanship in accordance with the mandatory

and advisory provisions of NFPA 70 unless more stringent requirements are specified or indicated.

1.4.3 Standard Products

Provide materials and equipment that are products of manufacturers regularly engaged in the production of such products which are of equal material, design and workmanship and:

a. Have been in satisfactory commercial or industrial use for 2 years prior to bid opening including applications of equipment and materials under similar circumstances and of similar size.

b. Have been on sale on the commercial market through advertisements, manufacturers' catalogs, or brochures during the 2-year period.

c. Where two or more items of the same class of equipment are required, provide products of a single manufacturer; however, the component parts of the item need not be the products of the same manufacturer unless stated in this section.

1.4.3.1 Alternative Qualifications

Products having less than a 2-year field service record will be acceptable if a certified record of satisfactory field operation for not less than 6000 hours, exclusive of the manufacturers' factory or laboratory tests, is furnished.

1.4.3.2 Material and Equipment Manufacturing Date

Products manufactured more than 3 years prior to date of delivery to site are not acceptable.

1.5 WARRANTY

Provide equipment items supported by service organizations that are reasonably convenient to the equipment installation in order to render satisfactory service to the equipment on a regular and emergency basis during the warranty period of the contract.

PART 2 PRODUCTS

2.1 MATERIALS AND EQUIPMENT

As a minimum, meet requirements of UL, where UL standards are established for those items, and requirements of NFPA 70 for all materials, equipment, and devices.

2.2 CONDUIT AND FITTINGS

Conform to the following:

2.2.1 Electrical, Zinc-Coated Steel Metallic Tubing (EMT)

UL 797, ANSI C80.3.

2.2.2 Fittings for Metal Conduit, EMT, and Flexible Metal Conduit

UL 514B. Ferrous fittings: cadmium- or zinc-coated in accordance with

UL 514B.

2.2.2.1 Fittings for EMT

Steelcompression type.

2.3 OUTLET BOXES AND COVERS

UL 514A, cadmium- or zinc-coated, if ferrous metal. UL 514C, if nonmetallic.

2.4 CABINETS, JUNCTION BOXES, AND PULL BOXES

Volume greater than 100 cubic inches, UL 50, hot-dip, zinc-coated, if sheet steel.

2.5 WIRES AND CABLES

Provide wires and cables in accordance applicable requirements of NFPA 70 and UL for type of insulation, jacket, and conductor specified or indicated. Do not use wires and cables manufactured more than 12 months prior to date of delivery to site.

2.5.1 Conductors

Provide the following:

a. Conductor sizes and capacities shown are based on copper, unless indicated otherwise.

b. Conductors No. 10 AWG and larger diameter: stranded.

c. Conductors No. -12 AWG and smaller diameter: solid.

d. All conductors: copper.

2.5.1.1 Equipment Manufacturer Requirements

When manufacturer's equipment requires copper conductors at the terminations or requires copper conductors to be provided between components of equipment, provide copper conductors or splices, splice boxes, and other work required to satisfy manufacturer's requirements.

2.5.1.2 Minimum Conductor Sizes

Provide minimum conductor size in accordance with the following:

a. Branch circuits: No. 12 AWG.

2.5.2 Color Coding

Provide color coding for feeder, branch, control, and signaling circuit conductors.

2.5.2.1 Ground and Neutral Conductors

Provide color coding of ground and neutral conductors as follows:

a. Grounding conductors: Green.

b. Neutral conductors: White.

c. Exception, where neutrals of more than one system are installed in same raceway or box, other neutrals color coding: white with a different colored (not green) stripe for each.

2.5.2.2 Ungrounded Conductors

Provide color coding of ungrounded conductors follows:

a. 480/277 volt, three-phase

(1) Phase A - brown

(2) Phase B - orange

(3) Phase C - yellow

2.5.3 Insulation

Unless specified or indicated otherwise or required by NFPA 70, provide wires rated for 600-volts, Type THWN/THHN conforming to UL 83. Provide only conductors with 90-degree C insulation or better.

2.5.4 Bonding Conductors

ASTM B1, solid bare copper wire for sizes No. 8 AWG and smaller diameter; ASTM B8, Class B, stranded bare copper wire for sizes No. 6 AWG and larger diameter.

2.6 SPLICES AND TERMINATION COMPONENTS

UL 486A-486B for wire connectors and UL 510 for insulating tapes. Connectors for No. 10 AWG and smaller diameter wires: insulated, pressure-type in accordance with UL 486A-486B or UL 486C (twist-on splicing connector). Provide solderless terminal lugs on stranded conductors.

2.7 DEVICE PLATES

Provide the following:

a. UL listed, one-piece device plates for outlets to suit the devices installed.

b. For metal outlet boxes, plates on unfinished walls: zinc-coated sheet steel or cast metal having round or beveled edges.

f. Screws: machine-type with countersunk heads in color to match finish of plate.

g. Sectional type device plates are not be permitted.

h. Plates installed in wet locations: gasketed and UL listed for "wet locations."

2.8 PANELBOARDS

Provide panelboards in accordance with the following:

a. UL 67 and UL 50 having a short-circuit current rating of 65,000 amperes symmetrical minimum.

b. Panelboards for use as service disconnecting means: additionally conform to UL 869A.

c. Panelboards: circuit breaker-equipped.

d. Designed such that individual breakers can be removed without disturbing adjacent units or without loosening or removing supplemental insulation supplied as means of obtaining clearances as required by UL.

e. Use of "Subfeed Breakers" is not acceptable .

f. Where "space only" is indicated, make provisions for future installation of breakers.

g. Directories: indicate load served by each circuit in panelboard.

h. Directories: indicate source of service to panelboard (e.g., Panel PA served from Panel MDP).

i. Provide new directories or engraved labels for existing panels or switch boards modified by this project .

j. Type directories and mount in holder behind transparent protective covering.

k. Panelboards: listed and labeled for their intended use.

l. Panelboard nameplates: provided in accordance with paragraph FIELD FABRICATED NAMEPLATES.

2.8.1 Enclosure

Provide panelboard enclosure in accordance with the following:

a. UL 50.

b. Cabinets mounted outdoors or flush-mounted: hot-dipped galvanized after fabrication.

c. Cabinets: painted in accordance with paragraph PAINTING.

d. Front edges of cabinets: form-flanged or fitted with structural shapes welded or riveted to the sheet steel, for supporting the panelboard front.

e. All cabinets: fabricated such that no part of any surface on the finished cabinet deviates from a true plane by more than 1/8 inch.

f. Holes: provided in the back of indoor surface-mounted cabinets, with outside spacers and inside stiffeners, for mounting the cabinets with a 1/2 inch clear space between the back of the cabinet and the wall surface.

g. Flush doors: mounted on hinges that expose only the hinge roll to view when the door is closed.

h. Each door: fitted with a combined catch and lock, except that doors over 24 inches long provided with a three-point latch having a knob with a T-handle, and a cylinder lock.

i. Keys: two provided with each lock, with all locks keyed alike.

j. Finished-head cap screws: provided for mounting the panelboard fronts on the cabinets.

2.8.2 Panelboard Buses

Support bus bars on bases independent of circuit breakers. Design main buses and back pans so that breakers may be changed without machining, drilling, or tapping. Provide isolated neutral bus in each panel for connection of circuit neutral conductors. Provide separate ground bus identified as equipment grounding bus per UL 67 for connecting grounding conductors; bond to steel cabinet.

2.8.3 Circuit Breakers

UL 489, solid state-type having a minimum short-circuit current rating equal to the short-circuit current rating of the panelboard in which the circuit breaker will be mounted. Breaker terminals: UL listed as suitable for type of conductor provided. Series rated circuit breakers and plug-in circuit breakers are unacceptable.

2.8.3.1 Multipole Breakers

Provide common trip-type with single operating handle. Design breaker such that overload in one pole automatically causes all poles to open. Maintain phase sequence throughout each panel so that any three adjacent breaker poles are connected to Phases A, B, and C, respectively.

2.9 MOTORS

Provide motors in accordance with the following:

a. NEMA MG 1.

b. N/A.

c. Provide the size in terms of HP, or kVA, or full-load current, or a combination of these characteristics, and other characteristics, of each motor as indicated or specified.

d. Determine specific motor characteristics to ensure provision of correctly sized starters and overload heaters.

e. Rate motors for operation 480-volt, 3-phase circuits with a terminal voltage rating of 460 volts.

f. Use motors designed to operate at full capacity with voltage variation of plus or minus 10 percent of motor voltage rating.

g. Unless otherwise indicated, use continuous duty type motors if rated 1 HP and above.

h. Where fuse protection is specifically recommended by the equipment manufacturer, provide fused switches in lieu of non-fused switches indicated.

2.9.1 Premium Efficiency Polyphase Motors

Select polyphase motors based on high efficiency characteristics relative to typical characteristics and applications as listed in NEMA MG 10. In addition, continuous rated, polyphase squirrel-cage medium induction motors must meet the requirements for premium efficiency electric motors in accordance with NEMA MG 1, including the NEMA full load efficiency ratings. In exception, for motor-driven equipment with a minimum seasonal or overall efficiency rating, such as a SEER rating, provide equipment with motor to meet the overall system rating indicated.

2.9.2 Motor Sizes

Provide size for duty to be performed, not exceeding the full-load nameplate current rating when driven equipment is operated at specified capacity under most severe conditions likely to be encountered. When motor size provided differs from size indicated or specified, make adjustments to wiring, disconnect devices, and branch circuit protection to accommodate equipment actually provided. Provide controllers for motors rated 1-hp and above with electronic phase-voltage monitors designed to protect motors from phase-loss, undervoltage, and overvoltage. Provide protection for motors from immediate restart by a time adjustable restart relay.

2.9.3 Wiring and Conduit

Provide internal wiring for components of packaged equipment as an integral part of the equipment. Provide power wiring and conduit for field-installed equipment as specified herein. Power wiring and conduit: conform to the requirements specified herein. Control wiring: provided under, and conform to, the requirements of the section specifying the associated equipment.

2.10 LOCKOUT REQUIREMENTS

Provide disconnecting means capable of being locked out for machines and other equipment to prevent unexpected startup or release of stored energy in accordance with 29 CFR 1910.147. Comply with requirements of Division 23, "Mechanical" for mechanical isolation of machines and other equipment.

2.11 GROUNDING AND BONDING EQUIPMENT

2.12 MANUFACTURER'S NAMEPLATE

Provide on each item of equipment a nameplate bearing the manufacturer's name, address, model number, and serial number securely affixed in a conspicuous place; the nameplate of the distributing agent will not be acceptable.

2.13 FIELD FABRICATED NAMEPLATES

Provide field fabricated nameplates in accordance with the following:

a. ASTM D709.

b. Provide laminated plastic nameplates for each equipment enclosure, relay, switch, and device; as specified or as indicated on the drawings.

c. Each nameplate inscription: identify the function and, when applicable, the position.

d. Nameplates: melamine plastic, 0.125 inch thick, white with black center core.

e. Surface: matte finish. Corners: square. Accurately align lettering and engrave into the core.

f. Minimum size of nameplates: one by 2.5 inches.

g. Lettering size and style: a minimum of 0.25 inch high normal block style.

2.14 WARNING SIGNS

Provide warning signs for flash protection in accordance with NFPA 70E and NEMA Z535.4 for switchboards, panelboards, industrial control panels, and motor control centers that are in other than dwelling occupancies and are likely to require examination, adjustment, servicing, or maintenance while energized. Provide field installed signs to warn qualified persons of potential electric arc flash hazards when warning signs are not provided by the manufacturer. Provide marking that is clearly visible to qualified persons before examination, adjustment, servicing, or maintenance of the equipment.

2.15 FACTORY APPLIED FINISH

Provide factory-applied finish on electrical equipment in accordance with the following:

a. NEMA 250 corrosion-resistance test and the additional requirements as specified herein.

b. Interior and exterior steel surfaces of equipment enclosures: thoroughly cleaned followed by a rust-inhibitive phosphatizing or equivalent treatment prior to painting.

c. Exterior surfaces: free from holes, seams, dents, weld marks, loose scale or other imperfections.

d. Interior surfaces: receive not less than one coat of corrosion-resisting paint in accordance with the manufacturer's standard practice.

e. Exterior surfaces: primed, filled where necessary, and given not less than two coats baked enamel with semigloss finish.

f. Equipment located indoors: ANSI Light Gray.

g. Provide manufacturer's coatings for touch-up work and as specified in paragraph FIELD APPLIED PAINTING.

PART 3 EXECUTION

3.1 INSTALLATION

Electrical installations, including weatherproof and hazardous locations and ducts, plenums and other air-handling spaces: conform to requirements of NFPA 70 and IEEE C2 and to requirements specified herein.

3.1.1 Wiring Methods

Provide insulated conductors installed in EMT. Grounding conductor: . Provide insulated green equipment grounding conductor for circuit(s) installed in conduit and raceways. Minimum conduit size: 3/4 inch in diameter for power circuits. Firestop conduit which penetrates fire-rated walls, fire-rated partitions, or fire-rated floors in accordance with Section 07 84 00, FIRESTOPPING.

3.1.1.1 Pull Wire

Install pull wires in empty conduits. Pull wire: plastic having minimum 200-pound force tensile strength. Leave minimum 36 inches of slack at each end of pull wire.

3.1.2 Conduit Installation

Keep conduit minimum 6 inches away from parallel runs of flues and steam or hot water pipes. Install conduit parallel with or at right angles to ceilings, walls, and structural members where conduit will be visible after completion of project.

3.1.2.1 Restrictions Applicable to EMT

a. Do not install underground.

b. Do not encase in concrete, mortar, grout, or other cementitious materials.

c. Do not use in areas subject to severe physical damage including but not limited to equipment rooms where moving or replacing equipment could physically damage the EMT.

3.1.2.2 Conduit Support

Support conduit by pipe straps, wall brackets, threaded rod conduit hangers, or ceiling trapeze. Fasten by wood screws to wood; by toggle bolts on hollow masonry units; by concrete inserts or expansion bolts on concrete or brick; and by machine screws, welded threaded studs, or spring-tension clamps on steel work. Threaded C-clamps may be used on rigid steel conduit only. Do not weld conduits or pipe straps to steel structures. Do not exceed one-fourth proof test load for load applied to fasteners. Provide vibration resistant and shock-resistant fasteners attached to concrete ceiling. Do not cut main reinforcing bars for any holes cut to depth of more than 1 1/2 inches in reinforced concrete beams or to depth of more than 3/4 inch in concrete joints. Fill unused holes. In partitions of light steel construction, use sheet metal screws. In suspended-ceiling construction, run conduit above ceiling. Do not support conduit by ceiling support system. Conduit and box systems: supported independently of both

(a) tie wires supporting ceiling grid system, and (b) ceiling grid system into which ceiling panels are placed. Do not share supporting means between electrical raceways and mechanical piping or ducts. Coordinate installationwith above-ceiling mechanical systems to assure maximum accessibility to all systems. Spring-steel fasteners may be used for lighting branch circuit conduit supports in suspended ceilings in dry locations.[Support exposed risers in wire shafts of multistory buildings by U-clamp hangers at each floor level and at 10 foot maximum intervals.] Where conduit crosses building expansion joints, provide suitable[watertight] expansion fitting that maintains conduit electrical continuity by bonding jumpers or other means. For conduits greater than 2 1/2 inches inside diameter, provide supports to resist forces of 0.5 times the equipment weight in any direction and 1.5 times the equipment weight in the downward direction.

3.1.2.3 Directional Changes in Conduit Runs

Make changes in direction of runs with symmetrical bends or cast-metal fittings. Make field-made bends and offsets with hickey or conduit-bending machine. Do not install crushed or deformed conduits. Avoid trapped conduits. Prevent plaster, dirt, or trash from lodging in conduits, boxes, fittings, and equipment during construction. Free clogged conduits of obstructions.

3.1.2.4 Locknuts and Bushings

Fasten conduits to sheet metal boxes and cabinets with two locknuts where required by NFPA 70, where insulated bushings are used, and where bushings cannot be brought into firm contact with the box; otherwise, use at least minimum single locknut and bushing. Provide locknuts with sharp edges for digging into wall of metal enclosures. Install bushings on ends of conduits, and provide insulating type where required by NFPA 70.

3.1.3 Boxes, Outlets, and Supports

Provide boxes in wiring and raceway systems wherever required for pulling of wires, making connections, and mounting of devices or fixtures. Boxes for metallic raceways: sheet steel. Provide each box with volume required by NFPA 70 for number of conductors enclosed in box. Fasten boxes and supports with wood screws on wood, with bolts and expansion shields on concrete or brick, with toggle bolts on hollow masonry units, and with machine screws or welded studs on steel.Support sheet metal boxes directly from building structure or by bar hangers. Where bar hangers are used, attach bar to raceways on opposite sides of box, and support raceway with approved-type fastener maximum 24 inches from box. When penetrating reinforced concrete members, avoid cutting reinforcing steel.

3.1.3.1 Boxes

Boxes for use with raceway systems: minimum 1 1/2 inches deep.

3.1.3.2 Pull Boxes

Construct of at least minimum size required by NFPA 70 of code-gauge galvanized sheet steel,. Provide boxes with screw-fastened covers. Where several feeders pass through common pull box, tag feeders to indicate clearly electrical characteristics, circuit number, and panel designation.

3.1.4 Mounting Heights

Mount panelboardsso height of operating handle at its highest position is maximum 78 inches above floor.

3.1.5 Conductor Identification

Provide conductor identification within each enclosure where tap, splice, or termination is made. For conductors No. 6 AWG and smaller diameter, provide color coding by factory-applied, color-impregnated insulation. For conductors No. 4 AWG and larger diameter, provide color coding by plastic-coated, self-sticking markers; colored nylon cable ties and plates; or heat shrink-type sleeves.

3.1.5.1 Marking Strips

Provide marking strips in accordance with the following:

a. Provide white or other light-colored plastic marking strips, fastened by screws to each terminal block, for wire designations.

b. Use permanent ink for the wire numbers

c. Provide reversible marking strips to permit marking both sides, or provide two marking strips with each block.

d. Size marking strips to accommodate the two sets of wire numbers.

e. Assign a device designation in accordance with NEMA ICS 1 to each device to which a connection is made. Mark each device terminal to which a connection is made with a distinct terminal marking corresponding to the wire designation used on the Contractor's schematic and connection diagrams.

f. The wire (terminal point) designations used on the Contractor's wiring diagrams and printed on terminal block marking strips may be according to the Contractor's standard practice; however, provide additional wire and cable designations for identification of remote (external) circuits for the Government's wire designations.

g. Prints of the marking strips drawings submitted for approval will be so marked and returned to the Contractor for addition of the designations to the terminal strips and tracings, along with any rearrangement of points required.

3.1.6 Splices

Make splices in accessible locations. Make splices in conductors No. 10 AWG and smaller diameter with insulated, pressure-type connector. Make splices in conductors No. 8 AWG and larger diameter with solderless connector, and cover with insulation material equivalent to conductor insulation.

3.1.7 Electrical Penetrations

Seal openings around electrical penetrations through fire resistance-rated walls, partitions, floors, or ceilings in accordance with Section 07 84 00 FIRESTOPPING.

3.1.8 Grounding and Bonding

Provide in accordance with NFPA 70. Ground exposed, non-current-carrying metallic parts of electrical equipment, metallic raceway systems, grounding conductor in metallic raceways. .

3.1.9 Equipment Connections

Provide power wiring for the connection of motors and control equipment under this section of the specification. Except as otherwise specifically noted or specified, automatic control wiring, control devices, and protective devices within the control circuitry are not included in this section of the specifications and are provided under the section specifying the associated equipment.

3.1.10 Repair of Existing Work

Perform repair of existing work as follows:

3.1.10.1 Workmanship

Lay out work in advance. Exercise care where cutting, channeling, chasing, or drilling of floors, walls, partitions, ceilings, or other surfaces is necessary for proper installation, support, or anchorage of conduit, raceways, or other electrical work. Repair damage to buildings, piping, and equipment using skilled craftsmen of trades involved.

3.1.10.2 Existing Concealed Wiring to be Removed

Disconnect existing concealed wiring to be removed from its source. Remove conductors; cut conduit flush with floor, underside of floor, and through walls; and seal openings.

3.1.10.3 Continuation of Service

Maintain continuity of existing circuits.

3.2 FIELD FABRICATED NAMEPLATE MOUNTING

Provide number, location, and letter designation of nameplates as indicated. Fasten nameplates to the device with a minimum of two sheet-metal screws or two rivets.

3.3 WARNING SIGN MOUNTING

Provide the number of signs required to be readable from each accessible side. Space the signs in accordance with NFPA 70E.

3.4 FIELD APPLIED PAINTING

Paint electrical equipment as required to match finish of adjacent surfaces or to meet the indicated or specified safety criteria. Where field painting of enclosures for panelboards is required, to correct damage to the manufacturer's factory applied coatings, or to meet the indicated or specified safety criteria, provide manufacturer's recommended coatings and apply in accordance to manufacturer's instructions.

3.5 FIELD QUALITY CONTROL

Furnish test equipment and personnel and submit written copies of test results. Give Contracting Officer 5 working days notice prior to each test.

3.5.1 Devices Subject to Manual Operation

Operate each device subject to manual operation at least five times, demonstrating satisfactory operation each time.

3.5.2 600-Volt Wiring Test

Test wiring rated 600 volt and less to verify that no short circuits or accidental grounds exist. Perform insulation resistance tests on wiring No. 6 AWG and larger diameter using instrument which applies voltage of approximately 500 volts to provide direct reading of resistance. Minimum resistance: 250,000 ohms.

3.5.3 Grounding System Test

Test grounding system to ensure continuity, and that resistance to ground is not excessive.

-- End of Section --