(4)

Operation & Maintenance Manual

Franklin Miller Since 1918

Franklin Miller Inc.
60 Okner Parkway
Livingston, NJ 07039 USA

Scope of Supply
Order No. 100444

Sold To:
Rth Mechanical Contractors
99 Pine Road
Brentwood, NH 03833 USA
Phone: 603-772-9779
Fax: 603-772-0389

Rep:
F.R. Mahony & Associates, Inc.
273 Weymouth Street
Rockland, MA 02370 USA

End User:
Portsmouth Naval Shipyard
Portsmouth, NH 00210 USA
Attn: Roger Roy

Organization ID	*P.O. #*	*Salesperson*	*Serial Number*	*Order Date*
RTH001	13-405	Joseph Macula	8932	10/28/2013

Line No.	Quantity	Units	Description
1	1.0		**TASKMASTER® GRINDER, Model TM14016 as follows:** - Nom. 14" x 16" Cutting Chamber - Ductile Iron Housing - Cutter Cartridges: 7Tooth Cam Cutters, 4140 H.T. - TITAN Cutters - 4140 H.T. High Flow - Mechanical Seals: Severe Duty TC vs TC in Cartridge - Hardened Stainless Steel Seal Cartridge Elements - 2" Hexagonal Shafting, 4140 H.T. - Cleaning Combs
2	1.0	EA	**3HP SUBMERSIBLE DRIVE INCLUDING:** - 3HP 460/3/60 (IP68) Explosion-Proof Submersible Motor - Gear Reducer - Cycloidal , Quill Type - Sealed Housing - 60 Ft. Cable Length
3	1.0	EA	**Automatic Reversing Controller, Model S25060** - Nema 4X FRP Enclosure - PLC logic control, IEC starters - LED Indicators - for long life - Current Sensing Auto-Reversing Program - 460/3/60
4	1.0	EA	**CHANNEL FRAME** - Model CF-3000 - Provides slide in cradle for easy grinder installation. - One piece fabricated frame mounted to Side Walls - 304 Stainless Steel - Lifting Bail - Lifting chain - Guiderails
5	1.0	EA	**OVERFLOW BARSCREEN** - 304 Stainless Steel - 56" L X 22" W - 1.5 " Flat Stock - 2" Spacing
6	1.0	EA	**Lot of Spare Parts**

Franklin Miller Inc.
60 Okner Parkway
Livingston, NJ 07039 USA

Scope of Supply
Order No. 100444

Sold To:
Rth Mechanical Contractors
99 Pine Road
Brentwood, NH 03833 USA
Phone: 603-772-9779
Fax: 603-772-0389

Rep:
F.R. Mahony & Associates, Inc.
273 Weymouth Street
Rockland, MA 02370 USA

End User:
Portsmouth Naval Shipyard
Portsmouth, NH 00210 USA
Attn: Roger Roy

Organization ID	*P.O. #*	*Salesperson*	*Serial Number*	*Order Date*
RTH001	13-405	Joseph Macula	8932	10/28/2013

Line No.	Quantity	Units	Description
			(24) Titan Disks (4) Cutter Cartridge (4) Seals, O rings and lock washers
7	**1.0**	**DY**	**Startup Services**
			Normal Day Rate includes up to 8 hours,

OPERATION AND MAINTENANCE MANUAL

Rev.3

TM14000 TASKMASTER® TITAN

OM00121 rev.3.wpd

Franklin Miller

60 Okner Parkway

Livingston, N.J. 07039

Tel:(973)535-9200 Fax:(973)535-6269

Please contact for spare parts and customer service:

Tel:(973)535-9200 x115

Confidentiality Notice

This manual embodies proprietary information of FRANKLIN MILLER INC. Any reproduction or transmittal to any party outside the recipient's organization (except where the recipient has been given the express right by written agreement) is expressly prohibited. Use and sale rights regarding the same are expressly reserved. It is submitted under a confidential relationship for a specific purpose, and the recipient agrees by accepting this submittal not to supply or disclose any information regarding it to any outside party. All rights hereto are expressly reserved by FRANKLIN MILLER INC., Livingston, New Jersey.

Copyright © 2002 Franklin Miller, Inc •All Rights Reserved

WARNING:

MACHINE SAFETY REQUIRES A JOINT EFFORT BETWEEN THE MANUFACTURER AND THE END-USER. IT IS THE RESPONSIBILITY OF THE END-USER TO READ AND UNDERSTAND THIS MANUAL.

BE CERTAIN THAT THE POWER IS SHUT OFF AND DISCONNECTED BEFORE WORKING ON MACHINE.

DO NOT OPERATE MACHINE WITH OIL FILLED REDUCERS WITHOUT BREATHER PLUG INSTALLED ON REDUCER. OPERATION WITHOUT BREATHER CAN DESTROY MOTOR AND REDUCER. SEE SECTION ON INSTALLATION.

GENERAL:

The information contained herein is of proprietary nature and is the exclusive property of Franklin Miller, Incorporated. The information is also protected by U.S.A. Patents. This manual is provided with the purchase of the Franklin Miller Taskmaster. It is to be used by the purchaser and/or end-user of this equipment. This manual is NOT to be reproduced or copied in whole or in part. The information contained within is NOT to be disclosed with others without the prior written consent of Franklin Miller, Incorporated.

PURPOSE:

This Operation and Maintenance Manual will familiarize Plant Supervisors and Operating Personnel with important details and proper instructions for the Installation, Operation, and Maintenance of the Taskmaster.

IDENTIFICATION:

The manufacturer's identification plate located on the flange of the Main Body contains Franklin Miller's logo, serial number, and model number. The motor and reducer also have identification plates. These identification plates contain important information and should not be removed for any reason.

Copyright © 2002 Franklin Miller, Inc •All Rights Reserved

FRANKLIN MILLER

Contacts List

Dept: Parts
Contact: Kathy Galanty
E-mail: kgalanty@franklinmiller.com

Dept: Production
Contact: Larry Marchica
E-mail: lmarchica@franklinmiller.com

Dept: Accounting
Contact: Olga Semenovskaya
E-mail: olga@franklinmiller.com

Dept: Engineering
Contact: Eric Kozub
E-mail: engineering@franklinmiller.com

Dept: Service
Contact: Jonathan Taylor
E-mail: jtaylor@franklinmiller.com

Dept. Sales
Contact: George Schumarty
E-mail: gschumarty@franklinmiller.com

Main Office: Tel: 973-535-9200
Fax: 973-535-6269
E-mail: info@franklinmiller.com

For any service issue, please contact our main office or any contact listed above.

OPERATION AND MAINTENANCE MANUAL

TM14000 TASKMASTER TITAN

TABLE OF CONTENTS

	SECTION
GENERAL INFORMATION	
PRECAUTIONARY SAFETY PROCEDURES	
INITIAL START-UP PROCEDURES	1
ROUTINE START-UP PROCEDURES	2
ROUTINE & EMERGENCY SHUTDOWN PROCEDURES	2
PREVENTIVE MAINTENANCE	3
LONG TERM STORAGE	3
REPAIR AND PARTS REPLACEMENT	4
ASSEMBLY	5
TROUBLE SHOOTING	6
WARRANTY	7
OUTLINE & CROSS-SECTIONAL DRAWINGS	8
MOTOR & REDUCER MANUALS DATA	9
CONTROL DATA	10

Copyright © 2002 Franklin Miller, Inc •All Rights Reserved

GENERAL INFORMATION

The Taskmaster® Titan's assembly consists of three main components: The main body, Electric Motor and Drive and Controller.

1 Shafts

The shafts will be constructed from 4140 alloy steel, through hardened, and precision finish ground.

2 Cutter Cartridges

The cutters and spacers are integral to the cartridge and constructed from 4140 alloy steel. Each cartridge will have (6) Cutters and (6) Spacers. The cartridges are through hardened and precision ground. The tooth profile is a CAM type to minimize frictional drag.

3 Titan Disks

The TITAN DISKS intermesh with the cutter cartridges at close clearance to generate tearing and shearing action while allowing flow to pass freely through the grinder. Each TITAN DISK shall consist of at least one large disk and one spacer integrally constructed as one piece for strength and rigidity. The disks shall be hardened and precision ground.

4 Seals and Bearings

a) Primary Seals: The primary seals feature elastomeric members which operate as opposing disk springs when compressed and at the same time keep the faces of the two metallic rings together insuring positive sealing.

b) Labyrinth Rings: Contact-less labyrinth rings of hardened 17-4 SS. are supplied to further protect from coarse and fine granular contaminants.

c) Bearings: The bearings are Conrad type oversized deep groove with double seal.

5 Electric Motor and Drive

Refer to specification section for information on motor and reducer.

6 Controller

The controller should be located near the TASKMASTER®, if possible. Other locations are acceptable, but a local shut-off should be used if the controller is remotely located. Controller specifications will vary due to the physical characteristics of the plant. See specifications section for details.

Copyright © 2002 Franklin Miller, Inc •All Rights Reserved

PRECAUTIONARY SAFETY PROCEDURES

* CAUTION *

PRODUCT SAFETY REQUIRES A JOINT EFFORT BETWEEN THE MANUFACTURER AND THE END-USER. THE USER MUST ENSURE THAT ALL EMPLOYEES ARE PROPERLY TRAINED N THE USE OF AND SAFETY PRECAUTIONS REQUIRED FOR THE OPERATION OF THIS AND ANY OTHER EQUIPMENT.

The following are only a few standard safety recommendations to the end user. By adhering to these rules and utilizing proper industrial hygiene, along with common sense, the end user can ensure a safe working environment for its staff.

1. Disconnect and lock out a power source before servicing
2. Read all manuals and labels before operation of the unit.
3. Proper safety attire should be worn at all times:
    a. Safety glasses
    b. Headgear
    c. Protective clothing
4. Stand clear of the unit while operating.
5. Do not put hands or fingers in the unit.
6. Never operate the unit with guards or covers removed.
7. Do not place metal objects in cutting the chamber.
8. Do not operate or stand over the unit while wearing loose clothing.

Copyright © 2002 Franklin Miller, Inc •All Rights Reserved

1

INITIAL START-UP

Initial Check out

(To Be Performed with Power Removed)

POWER Verify plant power matches power as shown on schematic.

ORIENTATION Verify the machine is orientated correctly in the channel.

FASTENERS Check that all bolts, nuts, and gaskets are in position and tight.

OBSTRUCTION Verify that there are no obstructions such as tramp metals, etc. in the cutting chambers.

REDUCERS Reducers are factory lubricated before shipment.

MOTORS Check that wiring on the motors is correct for the voltage used. Verify proper motor hookup by removing the cover plate of the motor junction box. Proper interconnects are stamped on the motor nameplate.

CONTROLLER

1. Verify that supplied wiring schematic information matches control panel
2. Verify proper mounting/wiring. Check all screw connections to ensure that all wiring is securely fastened
3. Check the AC current sensors settings and verify that they match the C/S (current sensor)as shown on the wiring schematic under General Controller Data. The factory setting is 80% of locked rotor amps based on average parameters.

INITIAL POWER-UP

1. Turn main circuit breaker on, the breaker is located on the top right corner of box.
2. Check panel to see if the correct indicator lights are lit, with the unit off, the amber "Power On" light should be lit, as well as the green "Off" light
3. Turn the motor switch to the on position.
4. On the control panel, place the three position(1) switch in the hand or auto mode this will begin the starting sequence. Once the motors begin their starting sequence the green "Off"(10) indicator light should go out and the red "Run"(5) light should illuminate

To stop the Taskmaster, place the three position switch in the off position.

CHECK FOR EXCESS NOISE AND/OR VIBRATION

All units are tested and thoroughly checked at the factory prior to shipment, however shifting may occur during transport or installation, so some units may require a short time for wear-in. If excessive noise and/or vibration persists, consult factory for assistance.

Copyright © 2002 Franklin Miller, Inc •All Rights Reserved

2

ROUTINE START-UP PROCEDURE

1. Turn main circuit breaker on, the breaker is located on the top right corner of box.

2. Check panel to see if the correct indicator lights are lit, with the unit off, the amber "Power On" light should be lit, as well as the green "Off" light

3. Turn the motor switch to the on position either Hand or Auto, the grinder will operate in the forward direction of rotation. Open valving or divert flow to the machine. The controller will monitor motor for a high current condition. If the current reaches an adjustable set point (factory set at approximately 80% of locked rotor) the grinder will stop. After a short delay the grinder will automatically restart using the sequence described above. This automatic starting sequence will repeat a total of four times. If high current is detected after four starts, the grinder will stop and go into an alarm condition. If at any time the grinder runs for more than sixty seconds without experiencing a high current, the restart counter is reset. The controller will remain in an alarm condition until reset. The controller is reset by moving the H-O-A switch to the Off position. Disconnecting power to the controller will also act to reset the unit. After reset, the controller may be restarted in the usual manner. If the grinder trips out again, it will be necessary to clear the obstruction.

4. Reset the control by moving the H-O-A switch to the off position. If alarm light still does not go off:

WORK IN THE CONTROL PANEL SHOULD BE DONE BY A QUALIFIED ELECTRICIAN.

5. Open panel front cover - push the reset button on motor starter heater (this is a thermal switch and will require time to cool down).

6. After resetting, move the H-O-A switch to the on position. If the grinder trips out again, it will be necessary to clear the obstruction.

For further information, see section 6 "Trouble Shooting"

Copyright © 2002 Franklin Miller, Inc •All Rights Reserved

ROUTINE SHUT-DOWN PROCEDURE

To stop the Taskmaster, stop or bypass flow to the unit, sewage flow through a non-operating grinder is not recommended as excess material will build up on the cutters causing upstream head to rise quickly. Allow a few minutes for fluid in the channel to drain. Place the three position switch in the "Off" position.

Should the H-O-A switch fail to shut down the unit, turn the "Off-On"Motor Switch off. If the unit still continues to run, turn the circuit breaker handle to the Off position which will cut power to the unit. In the very unlikely event the unit continues to run, disconnect the power leading to the control panel.

Operating instructions for Emergency Conditions. When the machine is in an alarm condition:

Is the light flashing or solidly lit?. If solid, try to restart.

If flashing, check the thermal motor overload.

Refer to Trouble Shooting Section and controller specification for help.

Copyright © 2002 Franklin Miller, Inc •All Rights Reserved

3

PREVENTIVE MAINTENANCE SCHEDULE							
Description of Work	Frequency						
	D	W	M	Q	S	A	OTHER
Visual Inspection		I					
Speed Reducer(2.06)					I		
Gear Lubrication (2.04)						R	
Seal Inspection (2.03)						I	
Fasteners (2.05)				I			

D - Daily	Q - Quarterly	I - Inspect
W - Weekly	S - Semi-Annually	A - Add
M - Monthly	A - Annually	R - Replace

Correct lubrication procedures are essential to the operation of this, or any equipment. Time periods are based on normal usage and should be adjusted by the individual user based on their operating environment. More frequent inspections are encouraged if the machine is operating in a harsh environment subject to high grit or heavy solids.

Tasks to Be Performed on a Regular Basis

Task scheduling should be established by the user based on the user's resources and operating/installation environment.

Visual Inspection

The Taskmaster should be visually inspected once a week. More frequent inspections are encouraged if the machine is operating in a harsh environment.

Cutter Cartridges and Titan Disks: Visually inspect the cutters for signs of excessive wear or rounding of the edges. If substantial wear or rounding is evident, the cutters may require replacement.

Bearings

This unit comes complete with factory sealed bearings. No lubricant is needed.

Seal Inspection

Every (12) months inspect the interior of the end housings for contamination indicating excessive seal leakage. **Refer to section 4 - Repair and Parts Replacement.**

Copyright © 2002 Franklin Miller, Inc •All Rights Reserved

Gears

The gears must be lubricated with Dow Corning #1122 Grease or Equal annually at the time of the seal inspection.

Fasteners

Inspect the fasteners once every (3) months and tighten as necessary.

Reducer

Check reducer for excessive vibration or noise. Check for leakage of lubricant.

See reducer manufacturer's manual.

Motor

Check motor for excessive vibration or noise.

See motor manufacturer's manual.

Also refer to motor and reducer manuals.

Copyright © 2002 Franklin Miller, Inc •All Rights Reserved

LONG TERM STORAGE REQUIREMENTS *(For periods between 3 and 6 months)*

Electric Motors:	
TEFC (including Explosion -Proof) Electric Motor:	The motor should be rotated manually to prevent problems with the bearings and seals. Procedure: Remove fan cover. Rotate Shaft 360° (100 revolutions) every 30 days.
Submersible Electric Motor:	The motor should be rotated manually to prevent problems with the bearings and seals. Procedure: Separate motor from speed reducer by removing attachment bolts and pulling straight up with lift. Motor is sealed to reducer flange with an o-ring, be careful not to damage it. Rotate the motor shaft 360° (10 revolutions) every 30 days. Rotate the speed reducer input shaft 360° (100 revolutions) every 30 days. Use the exposed coupling half for additional leverage as needed.
Machines less drive (lower Body Assemblies):	
For Taskmasters®:	Rotate the Taskmaster® input shaft 360° (10 revolutions) every 30 days. Use the exposed coupling half for additional leverage as needed.

Copyright © 2002 Franklin Miller, Inc •All Rights Reserved

LONG TERM STORAGE REQUIREMENTS *(For periods longer than 6 months).*

In addition to the rotation procedures listed above:	
Gear casing:	On machines with bearing/seal/gear casing, fill with oil or grease as applicable.
General procedure:	Store in a sheltered area away from chemical vapors or steam. Both the machine and its Controller should be sealed in air-tight plastic sheeting. Do not store in sunlight or near high heat. Spray oil on exposed shafts & seals. Rotate shafts every 30 days. Prior to placing the unit in operation, the unit should be carefully inspected.

Before start-up: Make sure to remove excess oil/grease (and restore the lubrication level to the manufacturers recommendation) before running unit. Failure to do so will result in seal damage and may void warrantee.

Copyright © 2002 Franklin Miller, Inc •All Rights Reserved

4

REPAIR AND PARTS REPLACEMENT

(Refer to outline (O/L) and cross-sectional drawings TM140000, TM14LDOP, TM8576, TM85990)

Replacement of only the reducer, coupling, and/or motor can be accomplished with the machine installed. (refer to the sections below). All other work will require removal of unit from installation. Clean the machine well inside and out with hose, soap, and brushes. The surface on which the machine is to be worked on should be free of sand, dirt, grit, metal chips, and other abrasive and corrosive materials. Working clean is important to bearing and seal life.

WARNING: DISCONNECT POWER SOURCE AND LOCK OUT BEFORE SERVICING
Disconnect and tag main line breaker up line of controller. Disconnect and tag motor leads in motor junction box.

Hose out unit and cutting chamber thoroughly and disinfect with isopropyl alcohol before working on unit.

CHECK EACH COMPONENT SUCH AS "O" RINGS AND RETAINING RINGS, BEARINGS AND SEALS FOR VISIBLE SIGNS OF DAMAGE OR WEAR. REPLACE AS NECESSARY.

1. Electric Motor (2, O/L)

Disconnect power before removing electric wires from motor and tag for proper rotation.

Remove all motor flange retaining hardware.

Lift motor off the reducer or motor adapter.

Remove key from motor/reducer, inspect and retain or replace if required.

2 Reducer (3, O/L)

Remove reducer mounting fasteners.

Lift reducer with coupling half (5, O/L) from reducer adapter. (4, O/L).

3 Coupling (152)

Remove the reducer (3, O/L) with coupling attached (see above).

Loosen the two coupling set screws (38, TM140000) and the key (16, TM140000). Inspect key. Retain or replace if necessary.

To remove drive shaft coupling half , remove slotted nut. It may be necessary to remove the entire adapter (4, O/L) to remove coupling (153, TM140000) from machine shaft (31, TM14LDOP).

4 Reducer Adapter (4, O/L)

Remove motor (2, O/L) and reducer (3, O/L) with coupling. Take care not to lose key.

Remove bolts on adapter (4, O/L) and separate from the top housing (5A, TM140000).

Copyright © 2002 Franklin Miller, Inc •All Rights Reserved

5 Main Body

The motor (2, O/L), reducer, (3, O/L), reducer adapter, (4, O/L), and coupling assembly (153, O/L) must be removed (see above) before the following can be done:

6 Bottom End Bearing/Seal Cartridges

Position main body horizontally - support on side frames (6, TM14LDOP).

Remove screws, lockwashers (44, TM140000), bottom cover (2, TM140000), and cover gasket (3, TM140000).

Remove bearing locknuts (33, TM140000) and lockwashers (34, TM140000).

Remove (4) bolts and lockwashers mounting bottom housing to side frame.

Remove bottom housing (5B, TM140000). This will reveal the rotary seal glands on the shafts.

Remove rotary seal glands from shafts (31& 32, TM14LDOP). Care should be taken when handling the mechanical seal rings as the mating surfaces are finely lapped.

To remove the stationary seal gland; Remove the three screws (48, TM140000) and lockwashers (44, TM140000) that are securing the bottom housing, and insert two of these screws through the tapped holes in the stationary seal gland to unseat the gland.

7 Cutters and Titan Disks

WARNING:

GLOVES SHOULD BE WORN DURING THE REMOVAL OF THE CUTTER CARTRIDGES

Note: Observe and note stacking configuration before removing cutters.

Remove bottom housing and components.

Slide each cutter cartridge(35, TM14LDOP) with intermeshing TITAN disks (35A, TM14LDOP) off together.

8 Drive End Bearing/Seal Cartridges

Remove cap screws (155, TM140000), lockwashers (156, TM140000), reducer adapter (4, O/L) and coupling (153, TM140000) (see above).

Remove bearing nut (33, TM140000) & washer (34, TM140000) from driven shaft(32, TM14LDOP), gears (21, TM140000) & (22, TM140000), keys (16, TM140000) & spacers (25 & 26, TM140000). (Store carefully) If gears cannot be removed by hand, a gear puller will be required.

Shafts are now free to be slid out of the assembly.

Remove rotary glands from shafts. Care should be taken when handling the seal assemblies as the mating surfaces are highly polished.

Copyright © 2002 Franklin Miller, Inc •All Rights Reserved

To remove the stationary seal gland; Remove the three screws and lockwashers (44, TM140000) to top housing ,and insert two of the screws removed in 3.05 above through the tapped holes in the stationary seal gland.

9 Clean and Inspect

Remove any gasket material.

End housing bores must be thoroughly cleaned. If the bores are scored, pitted or damaged in any way - replace the housing.

Inspect all parts for cracks or excessive wear and replace if necessary.

Inspect mechanical seal parts. Replace parts as necessary.

Check bearings for smoothness of rotation. Replace if necessary.

Clean gears and inspect for wear. Replace if necessary.

Copyright © 2002 Franklin Miller, Inc •All Rights Reserved

5

ASSEMBLY

(Refer to outline (O/L) and cross-sectional drawings TM140000, TM14LDOP, TM8576, TM85990)

1 Bearing/Seal Cartridge

NOTE! The fixed and expansion bearing/seal cartridges are not the same! The fixed cartridge used at the motor end of the machine has a snap-ring retaining the bearing. The expansion cartridge used at the bottom of the machine has an internal spacer or a longer rotary gland.

ALL O-RINGS SHOULD BE COATED WITH GREASE APPROVED FOR USE WITH EPDM MATERIAL, DOW #55 OR EQUIVALENT

MECHANICAL SEAL RUBBER AND METAL PARTS MUST BE FREE OF OIL AND GREASE

IMPORTANT: The seal must fit completely and snugly into its gland.

2 Expansion Seal Cartridge (Drawing TM85990)

Note: The expansion cartridge has a longer rotary gland (11), or a spacer (15).

Insert bearing (27) into expansion cartridge stationary gland (37)

Place O-Ring (10) inside gland (11) and lightly coat O-Ring with grease.

Insert (1) rubber and (1) metal element (29) & (36) of each mechanical seal into each knurled bore of stationary gland (37) and rotary gland (11). Insert rotary gland (11) and spacer (15)(if supplied) into stationary gland (37) and install set screw (199).

3 Fixed Seal Cartridge (Drawing TM85760)

Note: The fixed cartridge contains a snap ring retaining the bearing.

Insert bearing (27) and retaining ring (28) into fixed cartridge stationary gland (30).

Place O-Ring (10) inside gland (11) and lightly coat O-Ring with grease.

Insert (1) rubber and (1) metal element (29) & (36) of each mechanical seal into each knurled bore of stationary gland (30) and rotary gland (11). Insert rotary gland (11) into stationary gland (30) and install set screw (199).

Copyright © 2002 Franklin Miller, Inc •All Rights Reserved

4 TOP HOUSING/SHAFTS

Inspect shafts for damage, cracks, etc.

Press fixed cartridge assemblies (13, TM140000) onto shafts (31 & 32, TM14LDOP) (with O-Ring (10) in place) to engage hex portion of shaft.

Insert shafts through holes in top end housing.

Secure bearing/seal cartridges (13, TM140000) by using screws (4) & lockwashers (44, TM140000).

Install bearing/gear spacers (26, TM140000) on each shaft.

Place keys (16, TM140000) in key ways.

Slide pinion gear (21, TM140000) (smaller of the two) into position on the drive shaft (31, TM14LDOP).

Install spur gear (22, TM140000), secure with bearing locknut (33, TM140000) & lockwasher (34, TM140000). Bend tab of lockwasher into nut slot.

Grease gears with approx. one (1) pound of Dow Corning #1122 or equivalent.

Slide gear/coupling spacer (25, TM140000) on drive shaft.

Slide coupling (153, TM140000) on drive shaft and secure with washer (17, TM140000), nut (23, TM140000) cotter pin(20, TM140000) and two set screws (38, TM140000)

5 INSTALLING CUTTER CARTRIDGE AND TITAN DISKS

Cutters cartridges and Titan Disks must be clean and free of cracks or excessive wear.

Start by placing one cartridge (35, TM14LDOP) and six Titan disks on shafts (31 & 32, TM14LDOP) with shoulder toward housing on drive shaft and disk towards housing on driven shaft. Install with teeth arranged in a continuous spiral.

Install side rail (6, TM14LDOP) using screws(101, TM140000) and sealing washers(102, TM140000).

Coat exposed end of shaft with oil.

Copyright © 2002 Franklin Miller, Inc •All Rights Reserved

6 BOTTOM HOUSING AND SEAL CARTRIDGES

Install bottom housing (5B, TM140000) and secure to side rails (6, TM14LDOP).

Slide expansion seal cartridge assembly (14, TM140000) on shaft up against cutters. Be sure rotary seal gland hex is engaged. Lightly tap on the stationary seal gland to press bearing onto shaft.

Secure cartridges with bearing locknuts (33, TM140000) and lockwashers (34, TM140000). Bend tabs of lockwashers into nut slots.

Secure bearing/seal cartridge (14, TM140000) with screws (48, TM140000) and lockwashers (44, TM140000).

Important! Remove set screws (199, TM85760 & TM85990) from all (4) cartridges!

Install bottom cover gasket (2, TM140000), bottom cover (3, TM140000), screws, and lockwashers (44, TM14).

Be sure to tighten all side rail screws.

7 DRIVE

Apply coating of RTV liquid gasket on rim of top housing (5A, TM140000).

Slide reducer adapter (4, O/L) over drive shaft (31, TM14LDOP).

Fasten adapter (4, O/L) to housing with cap screws (155, TM140000) and lockwashers (156, TM140000).

Coat flanges of reducer with RTV gasket compound prior to securing.

Install key & coupling (5, O/L) on reducer output shaft. Gage position of coupling (153, TM140000) on drive shaft (31, TM14LDOP) to engage properly with coupling on reducer.

Secure reducer with screws & lockwashers.

Install motor with key and screws & lockwashers.

Connect wiring to motor.

Copyright © 2002 Franklin Miller, Inc •All Rights Reserved

6

TROUBLESHOOTING CHART

SYMPTOM	POSSIBLE SOLUTIONS
Normal operation:	After the starting (jog) sequence in either Hand or Auto, the grinder will operate in the forward direction of rotation and the controller will monitor motor for a high current condition. If the current reaches an adjustable set point (factory set at approximately 80% of locked rotor) the grinder will stop. After a short delay the grinder will automatically restart using the sequence described above. This automatic starting sequence will repeat a total of four times. If high current is detected after four starts, the grinder will stop and go into an alarm condition. If at any time the grinder runs for more than sixty seconds without experiencing a high current, the restart counter is reset. The controller will remain in an alarm condition until reset. The controller is reset by moving the H-O-A switch to the Off position. Disconnecting power to the controller will also act to reset the unit. After reset, the controller may be restarted in the usual manner. If the grinder trips out again, it will be necessary to clear the obstruction.
Alarm light lit:	Reset the control by moving the H-O-A switch to the off position. If alarm light still does not go off: **WORK IN THE CONTROL PANEL SHOULD BE DONE BY A QUALIFIED ELECTRICIAN.** Open panel front cover - push the reset button on motor starter heater (this is a thermal switch and will require time to cool down). After resetting, move the H-O-A switch to the on position. If the grinder trips out again, it will be necessary to clear the obstruction.
Clear obstruction:	**Turn off control by moving the H-O-A switch to the off position. Remove and lock out power from the control panel.** Examine and remove from grinder large un-shredable items. Check for damage. If none, restart the unit.
Electric Motor Does Not Run	Check fuses. Check incoming voltage and verify. Check the motor starter: Verify power is at input side. Verify power out output side when energized. Check electric motor: Verify wiring is correct for available line voltage. Verify power is available at motor terminal box. Check motor for short circuit. Check motor terminal box wiring diagram: Is there internal motor temperature protection ? Are there any other special features included with motor that may be interrupting power ? Check the PLC: See if the fault light indicator on the PLC is illuminated and the run light is off. This indicates a PLC problem.

Copyright © 2002 Franklin Miller, Inc •All Rights Reserved

TROUBLESHOOTING CHART

Electric Motor Runs but Is Laboring with Low Energy	Check for low voltage condition. Check motor bearings for wear.
Electric Motor Runs but Machines Does Not Turn	Check coupling between electric motor and the gear-reducer. Check coupling insert between gear-reducer and machine shaft. Check keys on machine rotor and machine coupling half.
Taskmaster's shafts do not rotate	Clear obstruction. Check gears. Check to see that shaft keys are fully captive.
Excessive Squealing, Grinding or Cutter Noise	Remove material from cutters. Machine cutter rotation direction incorrect. Replace cutter if damaged. Tighten shaft nut if loose. Lubricate check, and replace bearings if necessary. Check straightness of shaft and replace if bent.
Unit is reversing frequently.	**WORK IN THE CONTROL PANEL SHOULD BE DONE BY A QUALIFIED ELECTRICIAN.** Check the amp draw of the motor using a standard amp meter. Check each leg, each reading should be approximately the same. If they are not the same, have the incoming power supply corrected. If the readings are consistent, and over the maximum motor full load amps (as listed on the motor nameplate) then check the cutters for excessive wear, rounding of edges, or clearance between adjacent discs. Replace cutter cartridges as needed.
Oversized solids passing through grinder.	Check the cutters for excessive wear, rounding of edges, or clearance between adjacent discs. Replace cutter cartridges as needed.

Copyright © 2002 Franklin Miller, Inc •All Rights Reserved

7

FRANKLIN MILLER INC.
LIMITED WARRANTY

DOMESTIC

SELLER warrants the goods sold hereunder to be free from defects in material and workmanship under normal use and service not arising from misuse, negligence or accident, or unauthorized modification of the equipment, in connection with the use, installation, and transportation of the goods by BUYER, its agents, servants, employees or by carriers. SELLER's obligations under this warranty are limited to remedying any deficiencies in the goods at such place or places in the United States of America as may be designated by SELLER. This warranty shall pertain to any part or parts of any goods to which BUYER has, within (12) months after date of shipment, given written notice of a claimed defect to the SELLER. The BUYER shall be required to furnish SELLER with details of such defects and this warranty shall be effective as to such goods which upon SELLER's examination shall disclose to its satisfaction to have been defective and which at SELLER's option shall be repaired in place if required for a warranty repair. The BUYER at his expense shall make available in a suitable location for repair by SELLER or promptly thereafter be returned to SELLER, at BUYER's, or its nominees expense. If upon examination it is determined by the SELLER that the repair or replacement does not fall within the Warranty as set forth in this clause, an estimate for cost of repair will be provided to the BUYER. This warranty is expressly in lieu of all other warranties expressed or implied. In no event shall the SELLER be liable to the BUYER or to any other person for any loss or damage, direct or indirect, arising out of or caused by the use or operation of the goods, or for the loss of profits, business, or good will. Under no circumstance will SELLER be liable for any of the following: (1) third party claims against BUYER for losses or damages including liquidated damages: (2) loss of or damage to BUYER's records or data; or (3) economic consequential damages (including loss of profits or savings) or incidental damages even if SELLER is informed of their possibility. Excluded from the warranty herein are (a) defects in parts or components not manufactured directly by SELLER; Franklin Miller will, however, pass on the remaining balance of the purchased equipment manufacturer's warranty; (b) or not part of SELLER's standard design or are supplied pursuant to special BUYER's requirements; (c) certain parts which are subject to wear and tear from abrasive action or use thereof; and (d) any part that has been subjected to misuse. SELLER's liability is limited to furnishing or repairing at SELLER's option parts determined by SELLER to be defective. No express warranties and no implied warranties, whether of merchantability or fitness for any particular use, or otherwise (except as to title), other than those expressly set forth above which are made expressly in lieu of all other warranties, shall apply to products sold by us, and no waiver, alteration, or modification of the foregoing conditions shall be valid unless made in writing and signed by an executive officer of our corporation. If the buyer is in default of Clause 6 (Payment of Purchase Price) this warranty is null and void unless reinstated by SELLER.

Franklin Miller Inc

60 Okner Parkway • Livingston, NJ 07039-1604 • 973-535-9200 • Fax: 973-535-6269

Shop Test

SN: 8932 Model: TM14016	By: D. C. Date: 1-21-14

Check off all items examined, and note any problems and/or corrections required.
Mark items that are not applicable with N/A.

Mechanical check

- [x] Outline representation matches actual machine. O.L. # 8932TM14016 rev____
- [ ] All listed dimensions verified by actual measurement.
- [ ] Unit checked against Bill of Material and Order Entry
- [ ] Machine arrangement is proper for actual mounting position with suitable access for maintenance.

Paint / Coating

- [x] Manufacturer: Tnemec [x] Type / Catalog# 69
- [x] Thickness measured: 4-6 [x] Color: Safety Blue
- [ ] **Cutters** coated with heavy oil: _____

Bill of Material item by item check

- [x] **Motor** mfr: Reliance Volt: 230 / (460) ____ Phase: 3 FLA: 45 HP: 3
  Model: B517507
  SN: B9144595-010006 KR Enclosure (circle one): TEFC (TENV) XPF
  - [x] Submersible Motor Plate Pressure Checked 5 PSI, 1 HRS.
  - [x] Submersible Motor Plate Pressure Test Port Plugged.
  - [ ] Top Housing Pressure Test____ PSI ____ HRS
  - [ ] Bottom Housing Pressure Test____ PSI ____ HRS
  - [x] Reducer Adaptor Pressure Test 5 PSI 1 HRS
  - [ ] "T" or "X" Extension Pressure Test____ PSI ____ HRS
  - [ ] "T" or "X" Extension Pressure Test Port Plugged
- [x] **Reducer** mfr: Shimpo Model: D01-29C180FD-A1 Ratio: 29:1
  SN 41950-02K13
  - [ ] Breather location correct for mounting position.
  - [ ] Oil level correct. [x] Grease filled.
- [ ] Spare parts item by item check.
- [ ] Manual proof read and shipped with machine.

Franklin Miller Inc

60 Okner Parkway • Livingston, NJ 07039-1604 • 973-535-9200 • Fax: 973-535-6269

Shop Test (Continued)	
SN: 8932	Date: 1-21-14

Controller check.

- ☑ Electrical **Panel** serial # CONTROL WORKS - E00750
- ☐ Electrical **Panel** layout drawing # _____
- ☑ Electrical **Schematic** drawing # 1039185
- ☐ Control Addendum Matches supplied panel, paragraph by paragraph review **(see engineering if assistance is needed)**
- ☑ No Addendum Standard Part
- ☑ Schematic and layout match actual panel. Compare all major items.
- ☑ Layout tags match drawing.
- ☑ Layout locations verified. Compare button and light locations as shown on drawing with actual front door.
- ☑ Panel wired to machine, Functions checked "OK

Internal:

- ☑ Alarm contact: *use continuity check between terminal as shown on schematic to test for closure when in an alarm condition. Verify that the contact is retained after power failure.*
- ☑ Run contact: *use continuity check between terminal as shown on schematic to test for closure when in an alarm condition.*
- ☑ Remote contact: *place (3)position switch in auto mode, use jumper wire between terminals as shown on schematic to start machine. Maintain contact for machine to run.*
- NA ☐ Volt monitor: *turn adjustment up until it trips. If it will not trip reverse (2) incoming leads and retest. This component is phase sensitive.*
- ☑ Moisture sensor: *push test button and confirm light is on.*

External:

- ☑ Panel indicator lights: *verify all are lit as required.*
- NA ☐ Push buttons: *verify all perform specified function.*
- ☑ Switches: *verify all perform specified function.*
- NA ☐ Circuit breaker handle: *verify fit when panel door is closed.*

Franklin Miller Inc

60 Okner Parkway • Livingston, NJ 07039-1604 • 973-535-9200 • Fax: 973-535-6269

Shop Test (Continued)	
SN: 8932	Date: 1-21-14

Current Sensor Calculation	
FLA (motor) x 4 = LRA	18
Separate current transformer?	Y (N)
LRA/(C/T ratio)= DLA *(C/T ratio usually 50:5 or 10:1)*	
DLA x Number of Wraps *(multiply number of wraps on C/S and C/T)*	
Set Point	18

PLC Parameter Settings		
Parameter	As Arrived	Final Setting
In-Rush Delay Tm3	1.5	1.5
Number of Reversals C	4	4
Reverse Time Tm1	2	2
Pause Between Reversals Tm2	5	5
Automatic Reset Time Tm4	30	30

☑ Motor data:

- ☑ Motor overload set point (amps): 4.5
- ☑ Reverses when jammed.
- ☑ Amps at reversal: 17.9
  Press data hold button on amp meter after motor has started and before performing jam test.
- ☑ 4 # reversals = alarm contact closure. *Machine can be electrically caused to reverse by using a jumper wire between terminal (3) & (4) on SSAC.*
- ☑ Amps (NL): 23/2.0/2.1 *Clamp meter over each leg motor wire, write down average reading. If one reading differs greatly check wiring.*
- ☑ In-Rush (amps): 30.2

Franklin Miller Inc

60 Okner Parkway • Livingston, NJ 07039-1604 • 973-535-9200 • Fax: 973-535-6269

Shop Test (Continued)	
SN: 8932	Date: 1-21-14

☑ Volts (connected): 486/485/482 *As measure at circuit breaker. Check line (1) to (2) and (1) to (3).*

☑ Machine was run for 45 min ☑ With controller (if supplied).

☑ Some test items were shredded Pine 2x4

Inline units to be pressure tested while running.

☐ Tested pressure (PSI): _____

☐ Elapsed time: _____

Controller Labels

☑ Serial Number Label

☑ Voltage Label

☑ Operations Label

Machine Labels

☑ Serial Number Label

☑ Model Label

☐ Long Term Storage Label

NOTES:

8

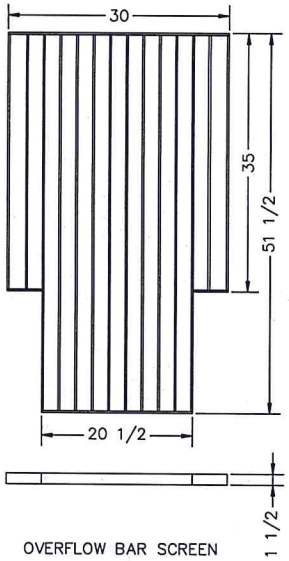

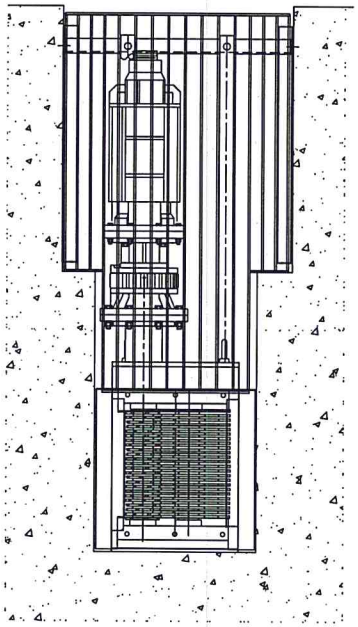

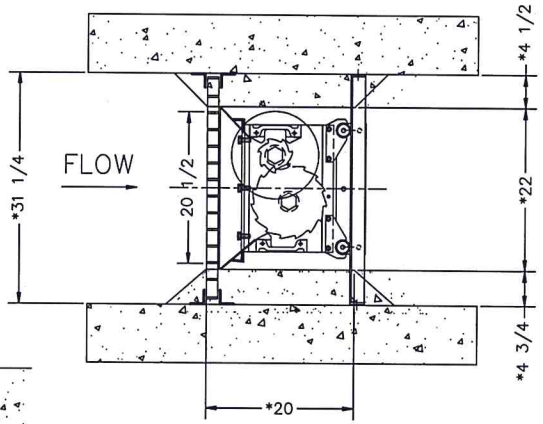

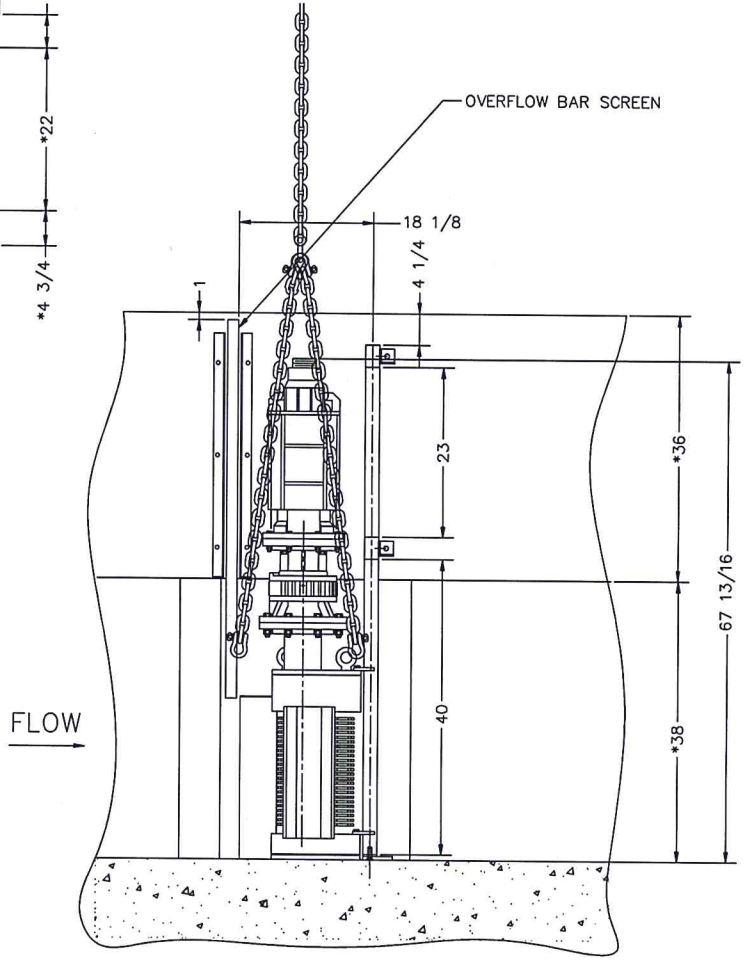

NOTE:
1. * DIMENSIONS DETERMINE BY THE CUSTOMER

THIS DRAWING EMBODIES A PROPRIETARY DESIGN ORIGINATED BY FRANKLIN MILLER, INC. ALL DESIGN, MANUFACTURING, REPRODUCTION (EXCEPT WHERE THE RECIPIENT HAS BEEN GIVEN THE EXPRESS RIGHT BY WRITTEN AGREEMENT TO REPRODUCE THE DRAWING) IS EXPRESSLY PROHIBITED. USE AND SALE RIGHTS REGARDING THE SAME ARE EXPRESSLY RESERVED. IT IS SUBMITTED UNDER A CONFIDENTIAL RELATIONSHIP FOR A SPECIFIC PURPOSE, AND THE RECIPIENT AGREES BY ACCEPTING THIS DRAWING NOT TO SUPPLY OR DISCLOSE ANY INFORMATION REGARDING IT TO ANY UNAUTHORIZED PERSON OR TO INCORPORATE IN OTHER PROJECTS ANY FEATURES PECULIAR TO THIS DESIGN. ALL RIGHTS HERETO ARE EXPRESSLY RESERVED BY FRANKLIN MILLER, INC. LIVINGSTON, NEW JERSEY.

LTR	P/N	MATERIAL	WEIGHT#
	–	STD	

THIRD ANGLE PROJECTION — DIMENSIONS INCH [mm]

Franklin Miller INC.
60 OKNER PARKWAY, LIVINGSTON, N.J. 07039

TM14016 3HP SUBM SHIMPO CF3000

SCALE	DWN	DATE	CKD	DATE	DWG NO.	REV
.	AG	11/01/13	.	.	8932TM14016	1

REV NO.	DESCRIPTION	DWN	ECO NO.	DATE
1	.	.	00000	.

BILL OF MATERIAL

ITEM	QTY	DESCRIPTION
2	1	COVER,BOTTOM
3	1	GASKET,BOTTOM COVER
5A	1	TOP HOUSING
5B	1	BOTTOM HOUSING
13	2	BEARING/SEAL CARTRIDGE,FIXED
14	2	BEARING/SEAL CARTRIDGE,EXPANSION
16	3	KEY,3/8 SQ x 1 3/4
17	1	WASHER,PLAIN,WIDE 3/4
17A	1	WASHER,PLAIN,WIDE 3/4
20	1	COTTER PIN, 1/8 x 1 1/2, SS
21	1	PINION GEAR, 18T
22	1	SPUR GEAR, 60T
23	1	NUT,HEX,SLOTTED, 3/4-10
25	1	SPACER, GEAR/COUPLING
26	2	SPACER,BRG/GEAR
33	3	BEARING NUT,N-07
34	3	BEARING LOCKWASHER, W-07
38	2	SETSCREW, 3/8-16 x 1/2
41	1	PIPE PLUG 3/8 NPT
44	14	LOCKWASHER,HI-COLLAR 5/16, SS
48	14	SOHCS, 5/16-18 x 1", SS
73A	1	FLOW DEFLECTOR, TOP
73B	1	FLOW DEFLECTOR, BOTTOM
74	6	FHSOHCS 3/8-16 x 1 1/4
101	8	SOHCS, 3/8-16 x 1 1/2
102	8	WASHER, BOLT SEALING 3/8
153	1	COUPLING HALF, DRIVE SHAFT
155	14	HHCS, 5/16-18 x 1 1/2, SS
156	14	LOCKWASHER, 5/16
157	2	EYE BOLT, 1/2
158	1	NAMEPLATE-S/N FMI

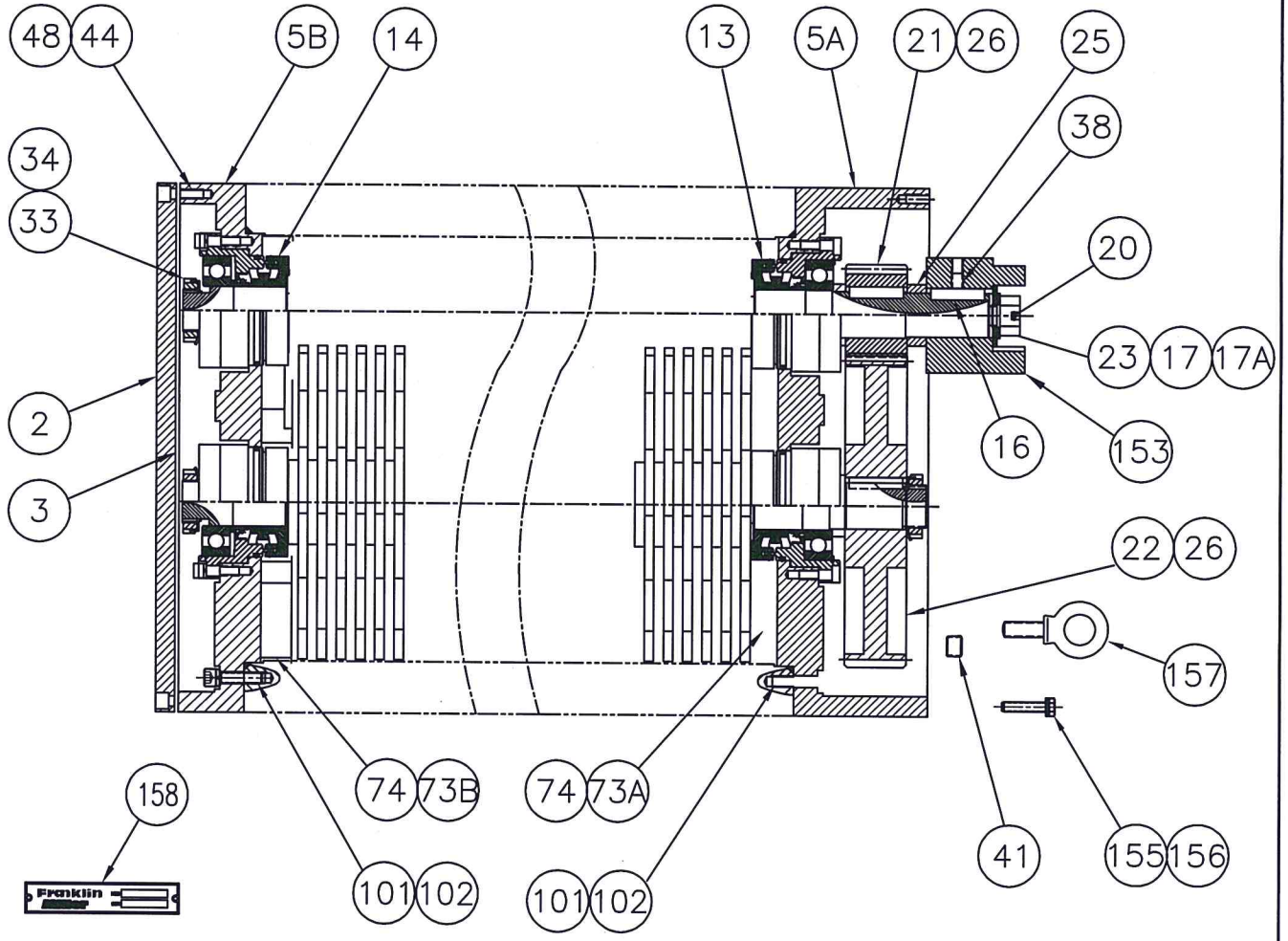

THIS DRAWING EMBODIES A PROPRIETARY DESIGN ORIGINATED BY FRANKLIN MILLER, INC. ALL DESIGN, MANUFACTURING, REPRODUCTION (EXCEPT WHERE THE RECIPIENT HAS BEEN GIVEN THE EXPRESS RIGHT BY WRITTEN AGREEMENT TO REPRODUCE THE DRAWING) IS EXPRESSLY PROHIBITED. USE AND SALE RIGHTS REGARDING THE SAME ARE EXPRESSLY RESERVED. IT IS SUBMITTED UNDER A CONFIDENTIAL RELATIONSHIP FOR A SPECIFIC PURPOSE, AND THE RECIPIENT AGREES BY ACCEPTING THIS DRAWING NOT TO SUPPLY OR DISCLOSE ANY INFORMATION REGARDING IT TO ANY UNAUTHORIZED PERSON OR TO INCORPORATE IN OTHER PROJECTS ANY FEATURES PECULIAR TO THIS DESIGN. ALL RIGHTS HERETO ARE EXPRESSLY RESERVED BY FRANKLIN MILLER, INC. LIVINGSTON, NEW JERSEY.

LTR	P/N	MATERIAL	WEIGHT#
	–	SEE BOM	

THIRD ANGLE PROJECTION — DIMENSIONS INCH [mm]

Franklin Miller INC.
60 OKNER PARKWAY, LIVINGSTON, N.J. 07039

TM14000 COMMON PARTS

SCALE	DWN	DATE	CKD	DATE	DWG NO.	REV
1:3	AEW	01/24/02	.	.	TM140000	.

BILL OF MATERIAL		
ITEM	QTY	DESCRIPTION
0	1	TM140000 COMMON PARTS
6	2	SIDE FRAME
31	1	DRIVE SHAFT
32	1	DRIVEN SHAFT
35	.	CUTTER CARTRIDGE SEE CHART BELOW
35A	.	TITAN CUTTERS SEE CHART BELOW

REV NO.	DESCRIPTION	DWN	ECO NO.	DATE
1	CHANGE	ABC	00000	MM/DD/YY

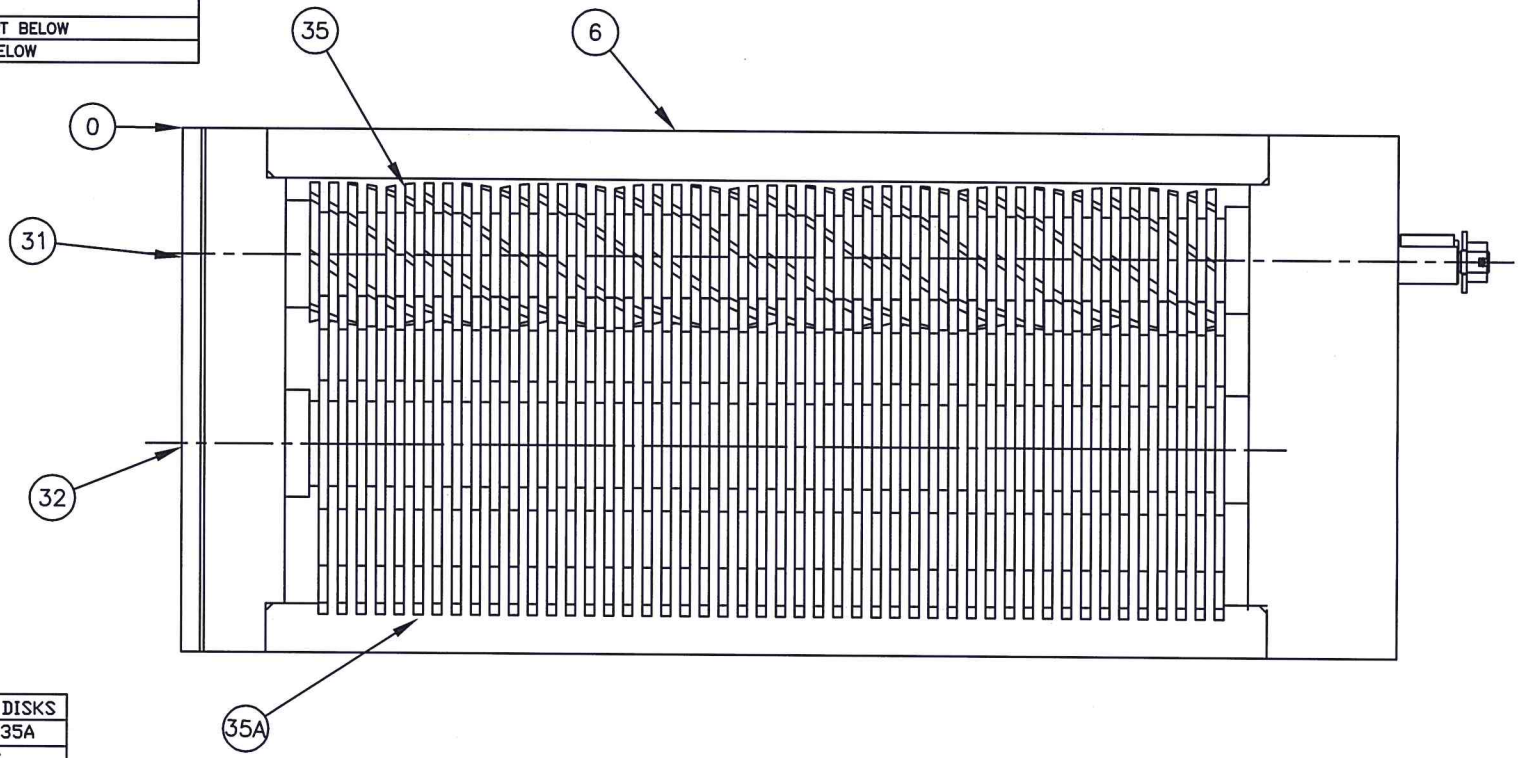

* CUTTER CARTRIDGES & TITAN DISKS		
MODEL	ITEM 35	ITEM 35A
TM14012	3	16
TM14016	4	24
TM14024	6	36
TM14032	8	48
TM14040	10	60
TM14052	13	78

THIS DRAWING EMBODIES A PROPRIETARY DESIGN ORIGINATED BY FRANKLIN MILLER, INC. ALL DESIGN, MANUFACTURING, REPRODUCTION (EXCEPT WHERE THE RECIPIENT HAS BEEN GIVEN THE EXPRESS RIGHT BY WRITTEN AGREEMENT TO REPRODUCE THE DRAWING) IS EXPRESSLY PROHIBITED. USE AND SALE RIGHTS REGARDING THE SAME ARE EXPRESSLY RESERVED. IT IS SUBMITTED UNDER A CONFIDENTIAL RELATIONSHIP FOR A SPECIFIC PURPOSE, AND THE RECIPIENT AGREES BY ACCEPTING THIS DRAWING NOT TO SUPPLY OR DISCLOSE ANY INFORMATION REGARDING IT TO ANY UNAUTHORIZED PERSON OR TO INCORPORATE IN OTHER PROJECTS ANY FEATURES PECULIAR TO THIS DESIGN. ALL RIGHTS HERETO ARE EXPRESSLY RESERVED BY FRANKLIN MILLER, INC. LIVINGSTON, NEW JERSEY.

LTR P/N	MATERIAL	WEIGHT#
–	SEE BOM	

Franklin Miller INC.
60 OKNER PARKWAY, LIVINGSTON, N.J. 07039

TM14000 OPEN CHANNEL LESS DRIVE

SCALE	DWN	DATE	CKD	DATE	DWG NO.	REV
.	JHT	08/10/01	.	.	TM14LDOP	.

BILL OF MATERIAL		
ITEM	QTY	DESCRIPTION
1	1	STATIONARY SEAL GLAND
2	1	ROTARY SEAL GLAND
3	1	BALL BEARING
4	1	LIP SEAL
5	1	MECHANICAL SEAL
6	1	RETAINING RING
7	1	O-RING
8	1	O-RING
9	3	LO-SOCK. HD CAP SCREW 5/16-18 x 1"
10	3	LOCKWASHER HI-COLLAR 5/16
11	2	SET SCREW 8-32 x 1/8

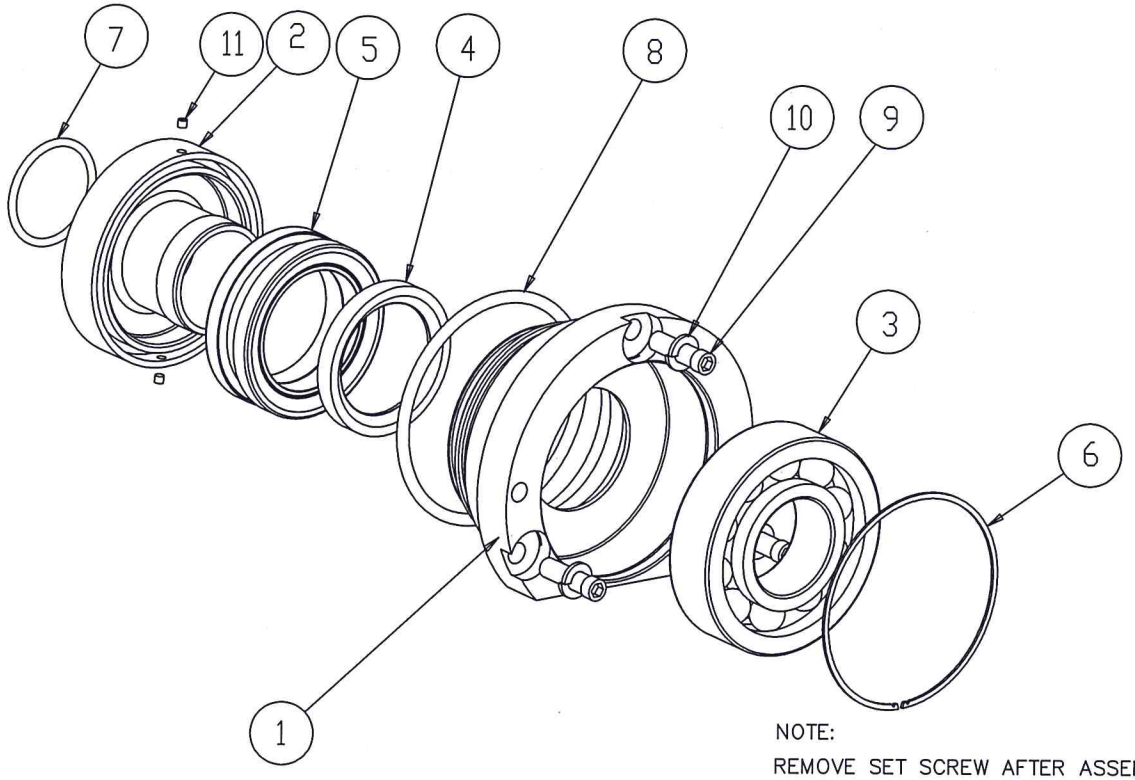

NOTE:
REMOVE SET SCREW AFTER ASSEMBLY INTO MACHINE!

MACHINE TOLERANCES UNLESS OTHERWISE NOTED			
DECIMALS		FRACTIONS	±1/32
.0	±.015	ANGLES	±.5°
.00	±.010	FINISH	125
.000	±.005		

THIS DRAWING EMBODIES A PROPRIETARY DESIGN ORIGINATED BY FRANKLIN MILLER, INC. ALL DESIGN, MANUFACTURING, REPRODUCTION (EXCEPT WHERE THE RECIPIENT HAS BEEN GIVEN THE EXPRESS RIGHT BY WRITTEN AGREEMENT TO REPRODUCE THE DRAWING) IS EXPRESSLY PROHIBITED. USE AND SALE RIGHTS REGARDING THE SAME ARE EXPRESSLY RESERVED. IT IS SUBMITTED UNDER A CONFIDENTIAL RELATIONSHIP FOR A SPECIFIC PURPOSE, AND THE RECIPIENT AGREES BY ACCEPTING THIS DRAWING NOT TO SUPPLY OR DISCLOSE ANY INFORMATION REGARDING IT TO ANY UNAUTHORIZED PERSON OR TO INCORPORATE IN OTHER PROJECTS ANY FEATURES PECULIAR TO THIS DESIGN. ALL RIGHTS HERETO ARE EXPRESSLY RESERVED BY FRANKLIN MILLER, INC. LIVINGSTON, NEW JERSEY.

LTR P/N	MATERIAL	WEIGHT#
V	VITON	
–	EPDM	

Franklin Miller INC.
60 OKNER PARKWAY, LIVINGSTON, N.J. 07039

TM8500 FIXED CARTRIDGE ASSEMBLY, T/C, SS

SCALE	DWN	DATE	CKD	DATE	DWG. NO.	REV.
.75	MSS	08/28/06	.	.	TM85760	–

BILL OF MATERIAL		
ITEM	QTY	DESCRIPTION
1	1	STATIONARY SEAL GLAND
2	1	ROTARY SEAL GLAND
3	1	BALL BEARING
4	1	LIP SEAL
5	1	MECHANICAL SEAL
6	–	–
7	1	O–RING
8	1	O–RING
9	3	SCREW, SOHCS, 5/16–18 x 1"
10	3	LOCKWASHER HI–COLLAR 5/16
11	2	SET SCREW 8–32 x 1/8
12	1	SPACER, ROTARY GLAND

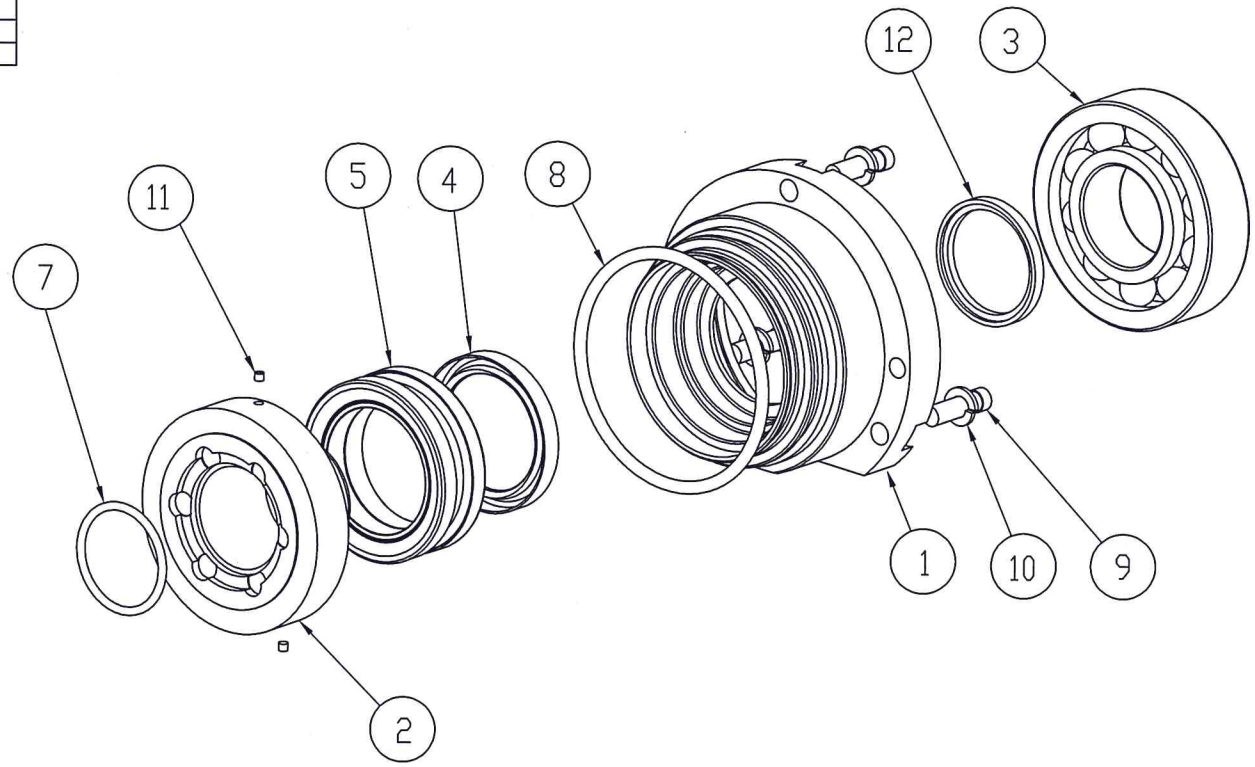

NOTE:

REMOVE SET SCREW AFTER ASSEMBLY INTO MACHINE!

MACHINE TOLERANCES UNLESS OTHERWISE NOTED			
DECIMALS		FRACTIONS	±1/32
.0	±.015	ANGLES	±.5°
.00	±.010	FINISH	125
.000	±.005		

THIS DRAWING EMBODIES A PROPRIETARY DESIGN ORIGINATED BY FRANKLIN MILLER, INC. ALL DESIGN, MANUFACTURING, REPRODUCTION (EXCEPT WHERE THE RECIPIENT HAS BEEN GIVEN THE EXPRESS RIGHT BY WRITTEN AGREEMENT TO REPRODUCE THE DRAWING) IS EXPRESSLY PROHIBITED. USE AND SALE RIGHTS REGARDING THE SAME ARE EXPRESSLY RESERVED. IT IS SUBMITTED UNDER A CONFIDENTIAL RELATIONSHIP FOR A SPECIFIC PURPOSE, AND THE RECIPIENT AGREES BY ACCEPTING THIS DRAWING NOT TO SUPPLY OR DISCLOSE ANY INFORMATION REGARDING IT TO ANY UNAUTHORIZED PERSON OR TO INCORPORATE IN OTHER PROJECTS ANY FEATURES PECULIAR TO THIS DESIGN. ALL RIGHTS HERETO ARE EXPRESSLY RESERVED BY FRANKLIN MILLER, INC. LIVINGSTON, NEW JERSEY.

LTR	P/N	MATERIAL	WEIGHT#
V		VITON	
–		EPDM	

Franklin Miller INC.
60 OKNER PARKWAY, LIVINGSTON, N.J. 07039

TM8500 EXPANSION CARTRIDGE ASSEMBLY, T/C, SS

SCALE	DWN	DATE	CKD	DATE	DWG. NO.	REV.
.75	MSS	08/28/06	.	.	TM85990	4

9

Application, Installation, and Operation Of Reliance® Tandem Seal Single and Polyphase Duty Master® A-C Submersible Pump Motors

UL Listed for Class I
Groups C and D
in Water or Sewage

A-C MOTORS *"Solutions You Can Trust"*

Instruction Manual B-3629-12
April, 1996

TABLE OF CONTENTS

	Page
RECEIVING AND HANDLING	1
INSTALLATION	2, 3
MAINTENANCE	4, 5
THERMAL PROTECTION SYSTEM	5, 6
MOISTURE DETECTION SYSTEM	6, 7
LEAD COLOR CODING	8
STANDARD REPLACEMENT SEAL CROSS REFERENCE	9
STANDARD REPLACEMENT "O" RING CROSS REFERENCE	9
STANDARD REPLACEMENT SNAP RING CROSS REFERENCE	10

IMPORTANT

It is important that these instructions be studied by the personnel installing and operating this equipment. Read thoroughly before starting. Keep these instructions for future reference.

IMPORTANT

The motors specified in this instruction book are U/L listed for application in Class I Groups C and D explosion-proof environments. All repairs, other than lead reconnects and outer seal replacement, shall be performed by an authorized Reliance service facility. Any other repairs performed by the customer or non-Reliance service facilities negates the U/L listing and motor warranty.

©Copyright Reliance Electric Industrial Company, 1996.

Revisions to this manual require Hazardous Approval Engineering and/or UL approval.

®Reliance and DutyMaster are registered trademarks of Reliance Electric Industrial Company

RECEIVING AND HANDLING

ACCEPTANCE

Thoroughly inspect this equipment before accepting shipment from the transportation company. If any of the goods called for in the bill of lading or express receipt are damaged or the quantity is short, do not accept them until the freight or express agent makes an appropriate notation on your freight bill or express receipt. If any concealed loss or damage is discovered later, notify your freight or express agent at once and request him to make an inspection. We will assist you in collecting claims for loss or damage in shipment; however, this willingness on our part does not remove the transportation company's responsibility in reimbursing you for collection of claims or replacement of material. Claims for loss or damage in shipment must not be deducted from the Reliance Electric invoice, nor should payment of the Reliance Electric invoice, be withheld awaiting adjustment of such claims, as the carrier guarantees safe delivery.

If considerable damage has been incurred and the situation is urgent, contact the nearest Reliance Electric Sales Office for assistance. Please keep a written record of all such communications.

UNPACKING

If facilities for the shelter of equipment are not available, repack motor and store shaft down until ready for use.

After unpacking and inspecting to see that all parts have been received in good condition, turn the motor shaft by hand to be sure that there are no obstructions to free rotation.

The motor should be checked for oil leaks after being removed from the crate. If positive indication of an oil leak is found around the shaft seal or drive end bracket, notify the nearest Reliance Electric Sales Office.

APPLICATION

All Reliance Submersible Pump Motors include thermal devices as standard. These devices are required by UL on all motors 1 HP and larger listed Class I, Groups C and D. These devices are not recognized by UL for motors less than 1 HP but are included by Reliance for additional motor protection. **Motors less than 1 HP are supplied with a cautionary label and are suitable on applications where vapor or gas ignition temperatures exceed 280°C. These motors are listed for Class I, Group D only.**

Continuous in Air Designs have a 1.0 Service Factor

Normally, there are four conditions during which a submersible sewage pump may be operated in gases or vapors.

1. When the wet well is being dewatered.
2. When the pump motor assembly is being lowered down the guiderails. The flow from the pump is needed during the installation process to insure that solids are cleared from the discharge flange area to insure proper seating.
3. When low-level cutoff controls fail.
4. When low-level sensors are positioned at the bottom of the pump assembly.

NOTE: *Outer shaft seal must be in liquid when motor is operated, whether motor is submerged or in air.*

Seals cannot be run in a dry environment without a significant reduction in seal life. If seal is to be run in a dry environment, a special design seal must be supplied. Standard seals applied in dry seal applications will not be covered by warranty.

CONTINUOUS OPERATION GASES OR VAPORS

It is the driven equipment manufacturer's responsibility to insure this motor product is properly applied.

Horsepower requirements are a function of pump design, impeller size & head and flow conditions. In gas operating time is a function of pit size, pump capacity, and flow conditions. Only the pump manufacturer can insure that the pump motor is properly applied for continuous in-gas or vapor operation. As with any motor product, it is essential that proper consideration be given to the load characteristics to insure the motor product will not be overloaded. Should such an overload occur, thermostats embedded in the windings will provide a signal to deenergize the motor. However, proper consideration of the application will prevent such an overload.

With reference to the diagram in figure 1, the following load conditions should be noted:

A. Below level #1 (bottom of the pump) fluid is not pumped and no load is reflected to the motor.

B. One pump should always be sized sufficiently large to draw the well down (even under maximum flow conditions). The maximum amount of time the motor will operate fully loaded and uncovered is the amount of time required to draw the well down from level #2 (top of the motor) to the bottom of the pump.

C. Time described in B above should not be greater than 15 minutes if full motor nameplate horsepower is required for this operation. (See Application Instructions).

D. The above application notes do not make allowance for:

(a) The heat exchanger effect of the attached pump. It is pumping a relatively cool fluid and will remove some heat.

(b) The motor does not operate fully loaded *completely* in gas. It is fully loaded as the motor is being uncovered.

(c) If the well is being drawn down from the top of the motor and maximum flow conditions exist, the influent flow will usually provide excellent cooling of the pump motor.

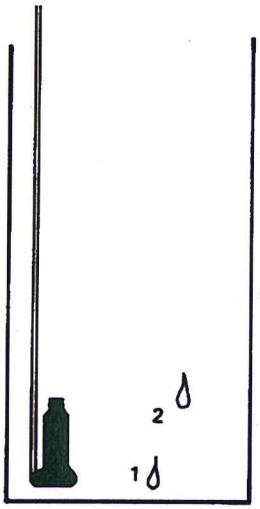

FIGURE 1

INSTALLATION

IMPORTANT

Read this manual thoroughly before installation.

1. **The user must select a motor starter and over-current protection suitable for this motor and its application. Consult motor starter application data as well as the National Electric Code and/or other local codes.**
2. **Maximum submergence of motor is not to exceed 200 feet in depth and/or 200 P.S.I. at motor seal.**
3. **Thermal Protectors must be connected. Leads marked P1 and P2 (See Figure 2).**
4. **Moisture Sensing Probes must be connected. Leads marked W1 and W2. (See Figure 3).**
5. **Check your power supply against final nameplate connection voltage.**

If required, the impeller should be heated slightly before pressing it on the shaft. *Under no circumstances should the impeller be driven on*

by pounding as this will damage the seal. When removing impeller warm slightly with a torch and pry impeller off evenly with either small pry bars or a wheel puller.

When the submersible pump motor leaves the factory it is ready for installation. No adjustment, venting or oil filling is required. For THREE PHASE motors the only connection to the motor lead cable is the power supply. For SINGLE PHASE motors the motor lead cable and power supply must be properly connected at the Control Box. Motor will operate successfully with frequency not more than 5% and voltage not more than 10% above or below nameplate data. Performance within this range will not necessarily be the same as the established performance at exact rated voltage and frequency.

All submersible pump motors will operate in either direction of rotation. To reverse direction of a THREE PHASE motor, interchange any two motor leads at the starter. To reverse direction of rotation of a SINGLE PHASE motor the proper connections must be made in the motor connection chamber; refer to the W/D's supplied in the motor connection chamber and Control Box.

Lifting eyes are supplied for purpose of installation and servicing. **(Do not use motor lead cables for lifting means.)** Normal care should be exercised to prevent mechanical damage to the seal, the frame and the insulated cable.

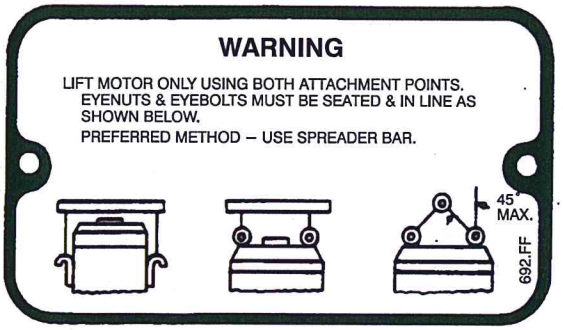

STARTING

CAUTION: Surface temperature of motor enclosure may reach temperatures which can cause discomfort or injury to personnel accidentally coming into contact with hot surfaces. (When installing, protection should be provided by user to protect against accidental contact with hot surface) .

On initial start up the motor and pump should be checked for proper rotation prior to final application.

The unit is designed to protect all power connections against moisture. All Reliance Submersible Pump Motors have a lead connection chamber. – THREE PHASE dual voltage motors have 9 motor leads and SINGLE PHASE dual voltage motors have 8 motor leads in this chamber. All Submersible Pump Motors have 2 thermal protector leads and 2 moisture sensing probe leads in this chamber.

Leads are tagged for easy identification. A connection diagram is provided in the lead chamber. Motors can be connected for either high or low voltages. (Some motor ratings are built as single voltage units and as such are not reconnectable).

The motor lead cable assembly for all Submersible Pump Motors has 3 marked power leads plus two ground leads, two thermal leads and two moisture sensing probe leads in standard cable lengths of 25 feet.

Leads are brought through an epoxy sealed connector providing a mechanically strong water tight seal. The cap and cable assembly are available from Reliance Electric as a replacement part assembly. When replacing the lead wire cap, care should be taken not to nick or damage the "O" ring seal. Replace any damaged or nicked "O" rings.

WHEN REPLACEMENT CABLE ASSEMBLY IS REQUIRED, ORDER FROM RELIANCE ELECTRIC CO. USING MOTOR IDENTIFICATION NUMBER.

MAINTENANCE

With proper application and installation of monitoring devices, periodic inspection of motor seals is not required. Should a malfunction occur the motor has been equipped with a moisture detection system and thermal protection which will provide advance warning of impending failure allowing the user to plan a maintenance program before failure occurs.

GENERAL NOTES: ALL PARTS

1. Reliance® Submersible Motors utilize an explosion-proof Class I, Groups C and D, tandem seal design, with an oil chamber separate from the winding area.
2. Wound Stators – Reliance Submersible Motors utilize a wound stator which has been pressed into the frame. The stator insulation system has been designed for the temperature and electrical rating involved. If the motor failure is analyzed to encompass a winding failure, return the motor to an authorized Reliance Electric Service Shop.
3. Encapsulated Lead Connector Assembly – The lead connector assembly has been especially encapsulated to insure integrity of the motor. The connector can be removed from the motor in order to reconnect leads. Should the lead connector assembly be damaged or the integrity of the encapsulation be in question, it is required that a replacement lead connector assembly be ordered from Reliance Electric Company.

⚠ WARNING

MOTOR MAY CONTAIN GAS UNDER PRESSURE DUE TO HIGH TEMPERATURES FROM OPERATION WITHOUT BEING SUBMERGED. DISASSEMBLY MAY CAUSE BODILY INJURY. FOR ASSISTANCE CONTACT A RELIANCE OFFICE.

4. Hardware – All hardware is stainless steel and should be replaced with the same type.
5. If the Conduit Connection is used, a corrosion resistant conduit such as stainless steel is recommended.
6. When replacement cable assembly is required, order from Reliance Electric Industrial Co. using motor identification number.

MECHANICAL REPAIRS

U/L listed motors must be returned to an authorized Reliance Electric Service Facility for repairs other than to replace the outer seal. (See note on Table of Content page.)

To inspect the outer seal proceed as follows:

1. Remove outer snap ring (3), replace as needed.
2. Remove rotating outer seal (4), replace as needed.
3. Approved lubricating and insulating oil shall meet Reliance approved source sheet 4824-18-AF. Manufacturer's materials currently meeting this specification are as follows:

ITEM	MANUFACTURER	MANUFACTURER'S IDENTIFICATION OF MATERIAL
1	Sun Oil Company	Sun Fleet Regular SAE 10W
2	Standard Oil Co.	Sohio 62 SAE 10W
3	Shell Oil Company	Rotella 10 SAE 10W

MOTOR INSPECTION

After assembly, run motor in shaft down position for 30 seconds minimum to one minute maximum to allow seals to seat; then check for oil leakage. In some cases, a slight oil mist will appear around the seal. Wipe clean after test.

PAINTING AND SHIPPING

Before painting motor, cover exposed seal. Remove any paper, tape, etc., from seal area before crating motor. These motors can be shipped in shaft up or shaft down position. Care must be taken that exposed seal is not damaged during shipment. Carton must protect exposed seal from dirt, dust and damage.

ELECTRICAL REPAIRS

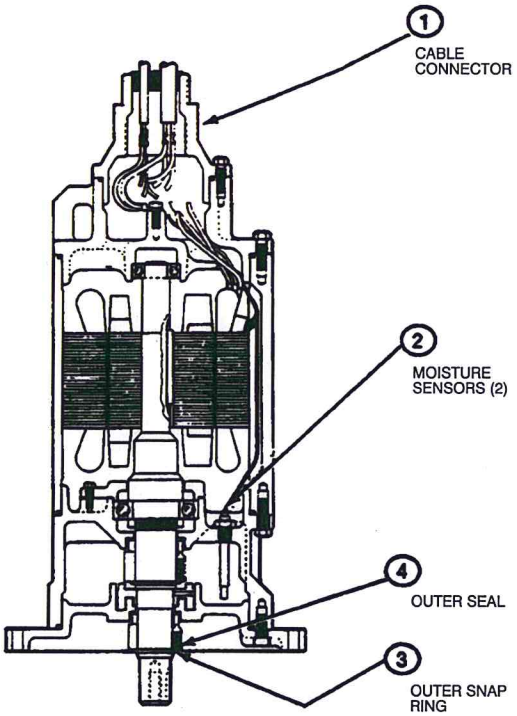

LEAD RECONNECT

The cable connector assembly may be removed to reconnect the leads without negating the U/L listing or the warranty.

WARNING

MOTOR MAY CONTAIN GAS UNDER PRESSURE DUE TO HIGH TEMPERATURES FROM OPERATION WITHOUT BEING SUBMERGED. DISASSEMBLY MAY CAUSE BODILY INJURY. FOR ASSISTANCE CONTACT A RELIANCE OFFICE.

PROCEDURE

1. Loosen four bolts, securing lead cable connector (1), two complete turns.
2. Attempt to break the cable connector seal thus relieving gas pressure within the motor. If gas pressure is not relieved loosen the bolts another turn and try again. Continue this process until the pressure is relieved and/or the cap is removed. Be extremely careful until the cable connector assembly is removed.
3. Remove cable connector and reconnect to desired voltage as shown on connection diagram inside the cable connector.
4. Insulate connectors with 4824-13-AU heat shrinkable plastic. If the 4824-13-AU shrinkable plastic is not available, tape may be used, but it should be an oil resistant type. Enough wraps should be used to insure the buildup will be sufficient to prevent the connector from breaking through the insulation. The following procedure should be employed: Five layers of plastic electrical tape followed by two layers electrical grade woven adhesive tape, such as Mystik 7020 or 3M #27, for oil and abrasion resistance.
5. Place "O" ring over fit and coat fit with Chevron SRI grease (not excessive).
6. Place cable connector back on motor, install four bolts, and tighten.

THERMAL PROTECTION SYSTEM

THERMAL PROTECTION

IMPORTANT

Reliance Submersible Pump Motors are equipped with thermal protection devices. Failure to properly connect or utilize this system voids motor warranty.

Thermostat leads marked P1 & P2 must be connected in series with the stop button of the 3-wire pilot circuit of the magnetic motor controller, so that the thermostat will open the circuit before dangerous temperatures are reached.

Thermostats are automatic reset for use in a normally closed circuit where the thermostat is connected in series with the holding coil of the magnetic starter. Thermostats provide "Over Temperature Protection 2" in accordance with NEMA MG 1-12.53. When the motor is so marked locked rotor protection is not provided by the winding over temperature protector. It is suggested that over current protection be used in the motor starter to insure locked rotor protection.

WARNING

MOTOR CONTROLLER MAY HAVE AUTOMATIC OR MANUAL OVERLOAD RESET. DISCONNECT ALL POWER LEADS TO MOTOR WHEN PERFORMING ANY WORK ON MOTOR OR DRIVEN EQUIPMENT.

A MANUAL, MOMENTARY START SWITCH IS REQUIRED TO PREVENT AUTOMATIC RESTART OF MOTOR WHEN THERMOSTAT RESETS.

If current through the thermostat will exceed the values listed in Figure 2 an intermediate control circuit relay must be used to reduce the current or the thermostat will not work properly.

Alternating Current

Volts	Continuous Amperes	Inrush Amperes
110-120	3.0	30
220-240	1.5	15
440-480	0.75	7.5
550-600	0.6	6.0

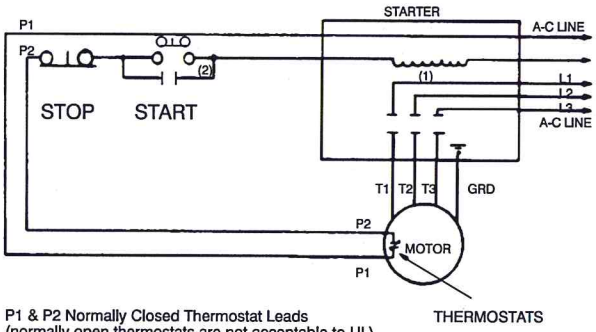

P1 & P2 Normally Closed Thermostat Leads
(normally open thermostats are not acceptable to UL)
(1) Starter Holding Coil
(2) Holding Coil Contacts – N.O.

FIGURE 2
TYPICAL THERMAL PROTECTOR WIRING DIAGRAM

MOISTURE DETECTION SYSTEM

MOISTURE SENSING PROBES

IMPORTANT

Reliance Submersible Pump Motors are equipped with moisture detection devices. Failure to properly connect or utilize this system voids motor warranty.

Moisture sensing probes, leads marked W_1, and W_2, must be used in conjunction with an induction relay. This device will detect moisture entering the oil chamber due to failure of the outer seal and, when properly connected to a warning device, will provide notification of needed maintenance. Integrity of system requires periodic test.

CONTROLS AND SIGNAL DEVICES

A control and signal device (not supplied by Reliance) must be installed at the job site to complete the moisture detection system.

Compatible controls are available from: Charles F. Warrick Co., Normandy Court, Royal Oak, Michigan 48073, (810) 549-4900.

CONTROL SELECTION AND ORDERING FOR CHARLES F. WARRICK CO. CONTROLS

ORDER BY COMPONENT NUMBER → 2800-XXX

A-C SUPPLY LINE VOLTAGE & FREQUENCY	
1	115V 50/60 Hz
2	230V 50/60Hz
4	480V 50/60Hz

CONTACT CONFIGURATION	TERMINAL PAIR		
	3-4	5-6	7-8
A	●	N.O.	●
B	●	N.C.	●
C	N.O.	●	N.O.
D	N.C.	●	N.O.
E	N.C.	●	N.C.
F	N.O.	N.O.	N.O.
G	N.C.	N.O.	N.O.
H	N.C.	N.C.	N.O.
J	N.C.	N.C.	N.C.
N.O.	NORMALLY OPEN		
N.C.	NORMALLY CLOSED		
●	NONE PROVIDED		

NEMA TYPE ENCLOSURE	
1	1
4	2, 4, 6

Line voltages are nominal values and may be anywhere from nominal minus 15% to nominal plus 10%.

TYPE 2800-XXX MOTOR MOISTURE DETECTOR CONTROL

INSTALLATION

All type 2800-XXX controls are identified by a specific component number which follows the format 2800-XXX where the X's are replaced by numbers and letters indicative of the A-C supply line voltage and frequency, contact configuration and enclosure. Each control has a data label on the right hand side of the terminal block. In addition, each enclosed control has another data label on the outside of the enclosure cover.

Mount the control on a vertical surface with the transformer on the left hand side and accomplish all indicated wiring. Terminals on the control are numbered and are in the same relative position as the terminals shown on the wiring diagram.

Terminal pair 1-2 must be continuously energized from an A-C supply line of electrical characteristics shown on the data label.

Contacts must be wired into the electrical load circuit(s) of the warning devices as required. Each contact used for load duty must be wired in series with the load and that series branch circuit connected across a power source compatible with the load.

Wiring must be provided from the moisture detector sensor probe leads of the RELIANCE ELECTRIC motor designated W1 and W2 to terminals 9 and 10 of the 2800-XXX control.

Control leads should not be installed in the same conduit as power leads. Induced voltage can cause false moisture signals.

CONTACT OPERATION

Normally open load contacts close and normally closed load contacts open when the sensor probes detect the influx of moisture within the motor.

TEST PROCEDURE

A normally closed pushbutton and neon indicating lamp are provided as means of checking the moisture sensing components.

When the pushbutton is depressed, the indicating lamp will be illuminated to indicate (A) power is supplied to the control, (B) the control is operative, and (C) wiring to the moisture sensing probes in the motor is intact. This procedure should be performed periodically to confirm integrity of circuit.

SIGNAL DEVICES

The signal device may be audible (bell, buzzer, horn or siren) or visible (incandescent or neon lamp) or both – a signal device of your choice may be obtained from your local electrical supply house.

SYSTEM OPERATION

It is recommended that upon indication (by warning light, etc.,) of outer seal failure that the motor be removed from the installation and the oil and outer seal be replaced as soon as possible.

If reconditioning is not performed within a 30 day period it is recommended that the inner seal be thoroughly inspected and replaced if required.

When ordering parts or reporting trouble give Sales Office complete Nameplate Data.

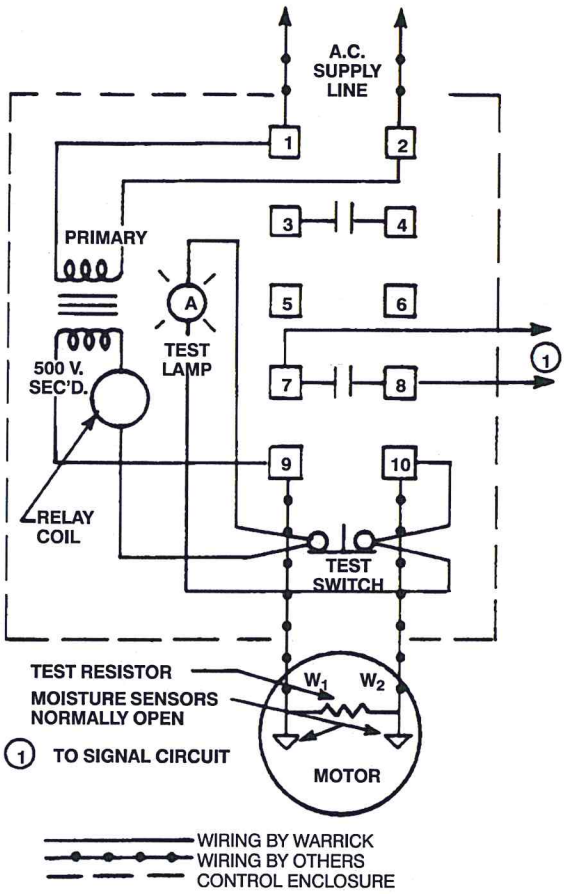

FIGURE 3
MOISTURE SENSING CIRCUIT
TYPICAL WIRING DIAGRAM

LEAD COLOR CODING

		BLACK LEAD	WHITE LEAD	RED LEAD	ORANGE LEAD	GREEN LEAD
Power Cable	Polyphase	T_1	T_2	T_3	—	Ground
	Single Phase	T_1	T_4	T_A	—	Ground
Control Cable	All	P_1	P_2	W_1	W_2	Ground

STANDARD REPLACEMENT SEAL CROSS REFERENCE

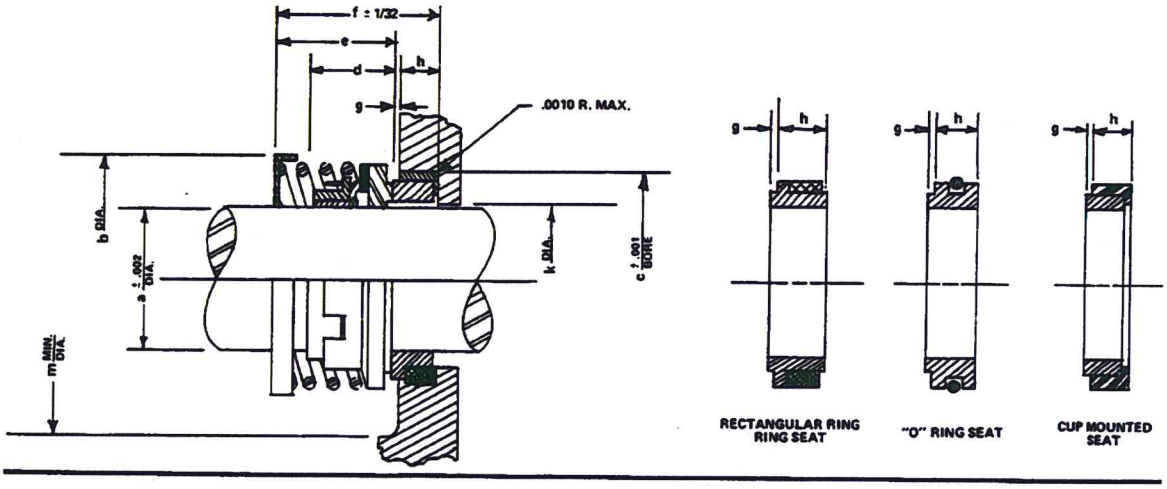

PURCHASING SPECIFICATIONS													
Part No. 64262-	a	Crane Type Seal	Type Seat	Spring Code No.	b	c	d	e	f	g	h	k	m
12-A	1.250	T-21	Cup Ceramic	BP1C1	1-15/16	1.875	47/64	1-1/16	1-1/2	1/16	3/8	1-7/16	2-3/16
12-B	1.500	T-21	Cup Ceramic	BP1C1	2-3/16	2.125	47/64	1-1/8	1-9/16	1/16	3/8	1-11/16	2-3/16
12-C	1.750	T-21	Cup Ceramic	BP1C1	2-5/8	2.500	49/64	1-3/8	1-7/8	1/16	7/16	1-15/16	2-7/8
12-D	2.000	T-21	Cup Ceramic	BP1C1	2-7/8	2.750	49/64	1-1/2	2	1/16	7/16	2-3/16	3-3/16
12-E	2.250	T-21	Cup Ceramic	BP1C1	3-1/8	3.125	49/64	1-11/16	2-1/4	1/16	1/2	3-7/16	3-7/16
12-G	3.00	T-21	Cup Ceramic	BP1C1	4.00	4.125	2.687	2.062	2.687	0.06	0.56	3.19	4.50
18-F	2.75	T-21	Cup Ceramic	BP1C1	3.75	3.500	0.796	1.125	1.75	0.03	0.595	2.94	4.12
18-G	3.00	T-21	Cup Ceramic	BP1C1	4.00	3.875	0.796	1.125	1.75	0.06	0.56	3.19	4.50
18-N	2.75	T-21	Cup Ceramic	BP1C1	3.75	3.50	0.796	1.125	1.75	0.06	0.56	2.94	4.12
8-J	3.25	T-21	Cup Ceramic	BP1C1	4.84	4.125	2.187	2.187	2.968	0.06	0.69	3.44	4.88

STANDARD REPLACEMENT "O" RING CROSS REFERENCE

Part No. 421900	I.D.	Nominal W.	UL Listed Material	Approved Suppliers and Compound Number	
60-FU	3.750	0.139	BUNA N	National Seal	No. B-46A
72-FU	4.500	0.125	BUNA N	Parker Seal	N-219-7
94-FU	5.875	0.125	BUNA N	Precision Rubber	No. 1197
100-FU	6.250	0.125	BUNA N	Crane Packing	No. 2561
124-FU	7.750	0.125	BUNA N		
144-FU	9.000	0.125	BUNA N		
168-FU	10.500	0.125	BUNA N		
192-FU	12.000	0.125	BUNA N		
208-FU	13.000	0.140	BUNA N		
240-FU	15.000	0.140	BUNA N		

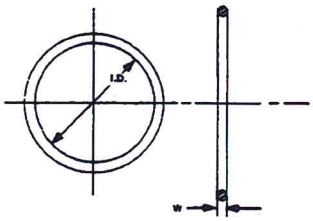

TO BE USED AT 9-1/2 I.D.
@ 3/32 NOM. THICKNESS

STANDARD REPLACEMENT SNAP RING CROSS REFERENCE

Part No. 47174-5-	a	T	Shaft Size	Waldes Catalog Number	Remarks
A	1.156 + .010 − .015	.050 ± .002	1-1/4	5108-125-H	#420 Stainless
B	1.387 + .010 − .015	.050 ± .002	1-1/2	5108-150-H	#420 Stainless
C	1.637 + .013 − .020	.062 ± .003	1-3/4	5108-177-H	#420 Stainless
D	1.850 + .013 − .020	.062 ± .003	2	5108-200-H	#420 Stainless
E	2.081 + .015 − .025	.078 ± .003	2-1/4	5108-225-H	#420 Stainless
H	2.543 + .015 − .025	.093 ± .003	2-3/4	5100-275-H	#420 Stainless
F	2.775 + .020 − .030	.093 ± .003	3	5100-300-H	#420 Stainless
G	3.006 + .020 − .030	.093 ± .003	3-1/4	5100-325-H	#420 Stainless

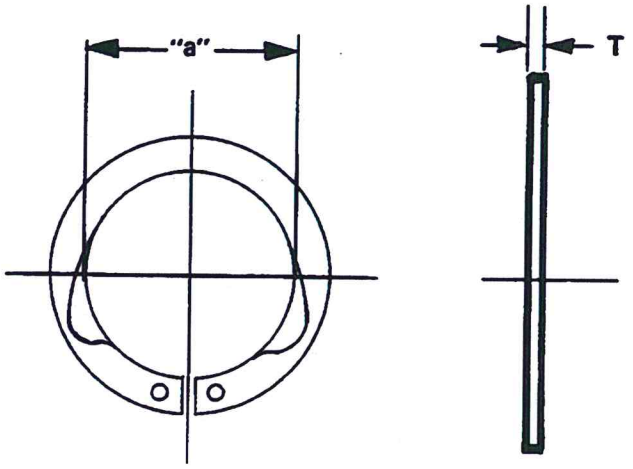

NOTE: *Outer shaft seal must be in liquid when motor is operated, whether motor is submerged or in air.*

Seals cannot be run in a dry environment without a significant reduction in seal life.

Reliance Electric / 24701 Euclid Avenue / Cleveland, Ohio 44117 / (216) 266-7000

Rockwell *Automation*

Reliance Electric

Printed in U.S.A. Instruction Manual B-3629-12 49610M

SM-CYCLO®
SPEED REDUCERS

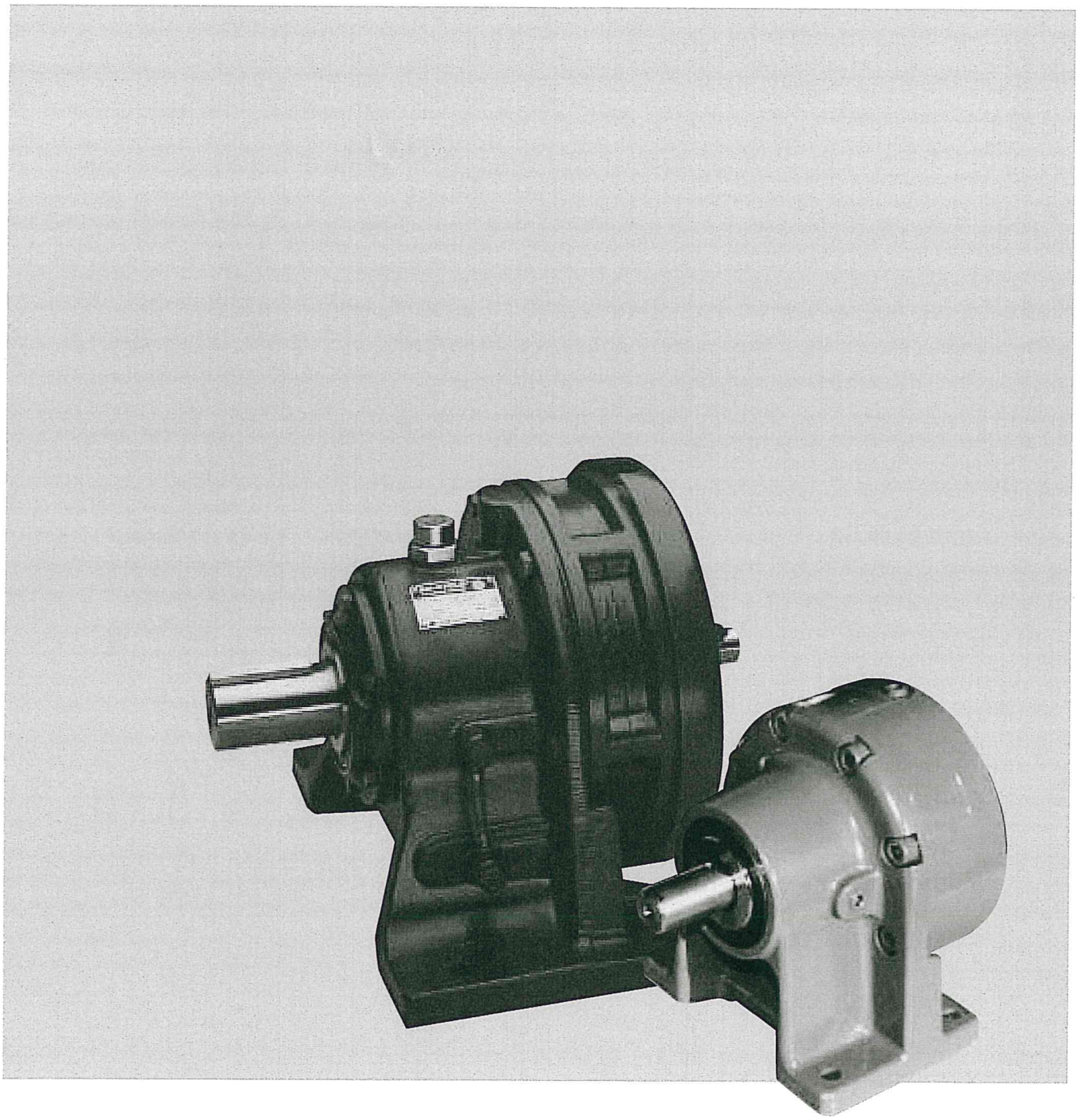

SECTION A CONTENTS

Mounting A-2
General Construction A-3, 4
Lubrication . . . . . A-5~10
Grease Units A-7, 8
Designated Greases A-7
Grease Replenishment & Change A-7
Quantities of Grease A-7, 8
Oil Units . . . . . A-8 ~ 10
Oil Fill Procedure, Oil Gauge A-8
Standard Oils A-8
Oil Quantities A-9
Allowable Oil Viscosity A-9
Oil Change A-9
Forced Lubrication A-9
Oil Level Dimensions A-10
Bearings, Oil Seals & Gaskets . . . . . A-11~13
Dissassembly, Assembly A-14, 15
Daily Inspection A-16
Ordering Correct Replacement Units & Parts . . . A-16
Storage & Operation After Storage A-16
Trouble Shooting A-17
Notes A-18

Mounting

1. Mounting on Exact Planes
The Horizontal Type oil-lubricated units must be mounted on horizontal surfaces. Where they are mounted on inclined surfaces, some modifications may be necessary. Specify mounting plane inclination at time of ordering.

2. Accurate Alignment
Where the reducer is connected to the motor and the driven machine through couplings, align the shafts accurately. Where the reducer is connected through V pulleys or sprockets, insure that the belts or chains are neither too tight nor too slack.

3. Overhung Load Positions
Overhung loads should be located as close to the bearing as possible. (See the SM-CYCLO® 6000 Series Catalog page E-8.)

4. Foundations
Foundations must be rugged enough to withstand shock and stress applied from the load side through the reducer.

5. Secure Housing
Where the reduction units are operated under conditions of vibration and/or frequent starts and stops, it is recommended to secure them on their mounting surfaces by inserting dowel pins into the knock-holes provided on the foot of the casing. This will insure that bending or shearing forces are reduced on the mounting bolts. Pins must be securely inserted, particularly when the units are to be operated under conditions of severe recurrent peak loads.

6. Mounting Accessibility
The reduction units must be mounted in locations with easy accessibility for lubrication maintenance purposes.

7. Ventilation
When the SM-CYCLO® Speed Reducer is mounted in a separate enclosure, be sure that adequate ventilation is provided.

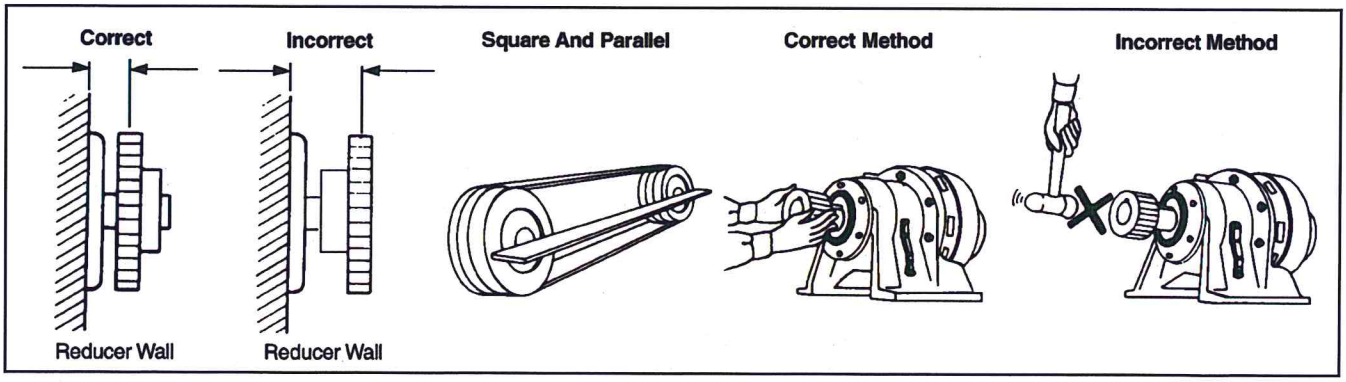

GENERAL CONSTRUCTION

Fig. A-1 Speed Reducer – Horizontal Foot Mount, Single Reduction

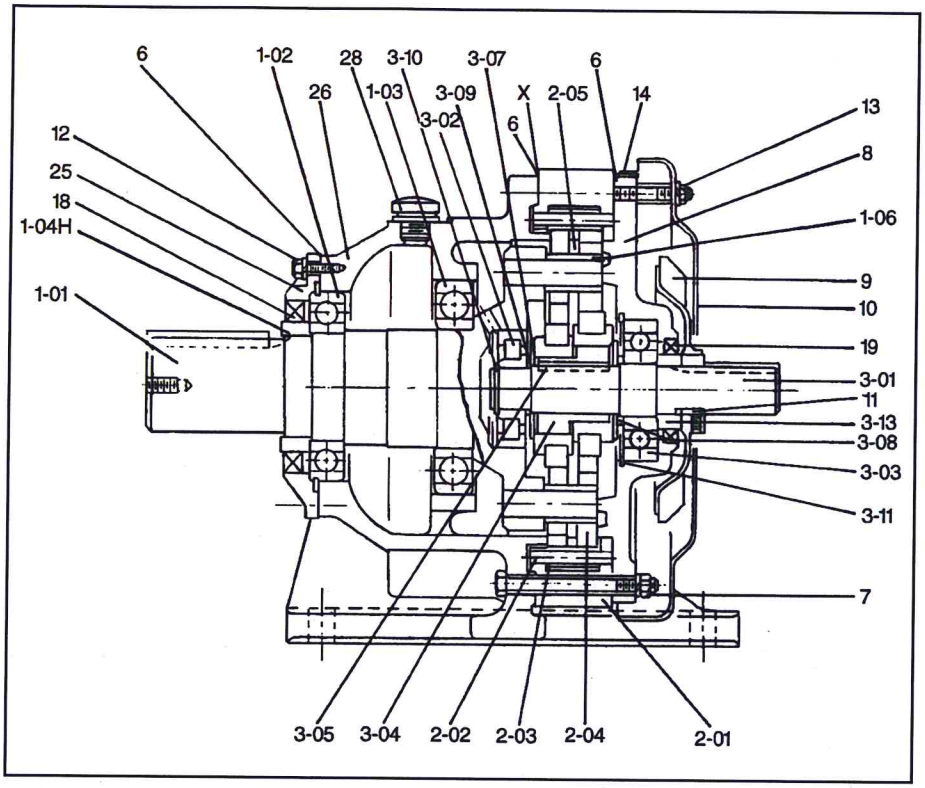

Fig. A-2 Speed Reducer – Vertical Base Mount, Single Reduction

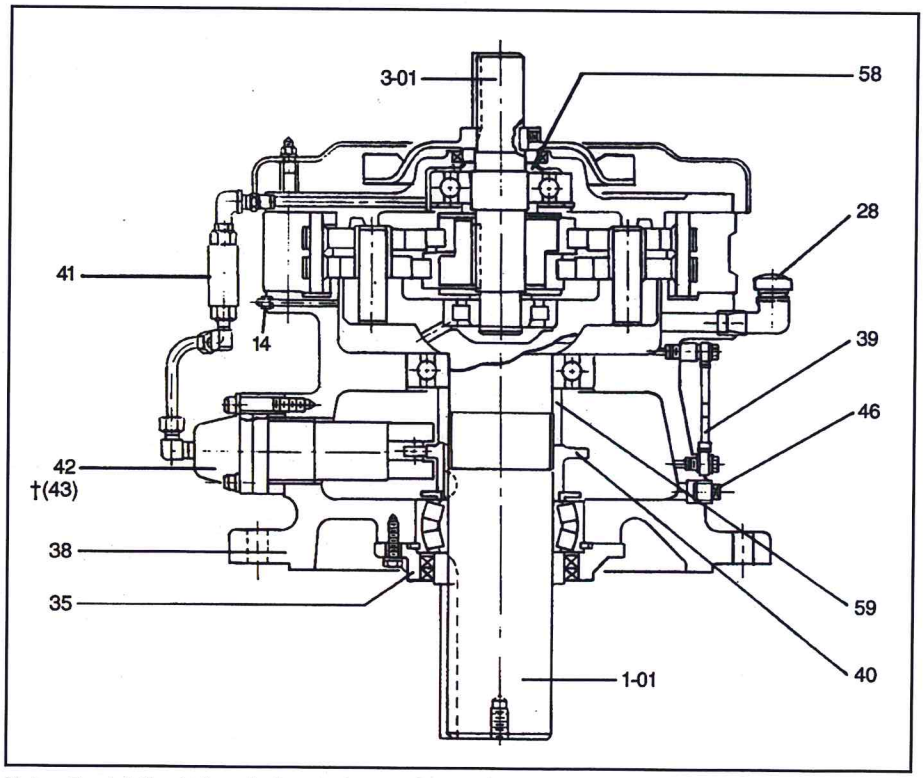

Note: For details of oil seals, bearings or gaskets, refer to A-11 ~ 13.
†Refer to Table A-16 on Pg. A-9 for units which require a positive displacement pump.
*Pt. No. 58 — frame sizes 6195-6275 only; Pt. No. 59 — frame sizes 6205-6275 only.
**See Fig. A-3, Page A-4; ‡ See Fig. A-4, Page A-4.

Table A-1. Speed Reducer Main Parts

Part No.	Part Name
1-01	Slow Speed Shaft w/pins
1-02	Bearing A
1-03	Bearing B
1-04H	Oil Seal Collar—Horizontal
1-06	Slow Speed Shaft Rollers
2-01	Ring Gear Housing
2-02	Ring Gear Pins
2-03	Ring Gear Rollers
2-04	Cyclo Disc
2-05	Spacer Ring
3-01	High Speed Shaft
3-02	Bearing C
3-03	Bearing D
3-04	Eccentric Bearing Assembly
3-05	Eccentric Key
**3-06	Balance Weight
3-07	Spacer
3-08	Spacer
3-09	Spacer
3-10	Retaining Ring
3-11	Retaining Ring
3-13	Collar
‡5-01	Intermediate Shaft w/Pins
‡5-02	Bearing F
‡5-03	Bearing G
‡5-04	Eccentric Bearing Assembly
6	Gasket Set
7	Casing Nuts & Bolts
8	High Speed End Shield
9	Cooling Fan & Set Screw
10	Fan Cover
11	Fan Key
12	Bolts For SS Oil Seal Housing
13	Bolts, Spacers For Fan Cover
14	Plug
‡15	Grease Nipple
18	Slow Speed Output Oil Seal
19	High Speed Input Oil Seal
25	Horizontal Oil Seal Housing
26	Horizontal Case
28	Oil Fill Plug
29	Oil Gauge—Horizontal Unit
35	Vertical Oil Seal Housing
38	Vertical Case (Integral V Type)
39	Oil Gauge—Vertical Unit
40	Cam
41	Piping Set & Oil Signal
42	Plunger Pump
43	Positive Displacement Pump
46	Drain Plug
‡55	Intermediate Cover
‡57	Eye Bolt
*58	Oil Slinger
*59	Spacer

GENERAL CONSTRUCTION

Fig. A-3 Speed Reducer/Single Disc Type (Frame Size 6060-6095)

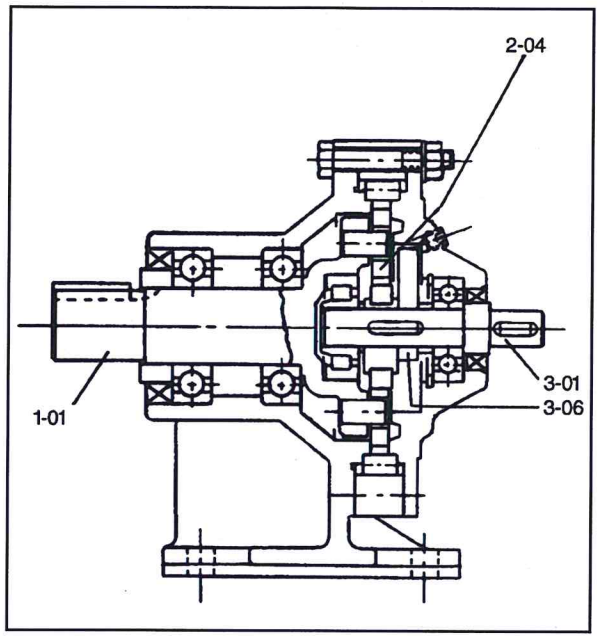

Fig. A-4 Speed Reducer/Double Reduction

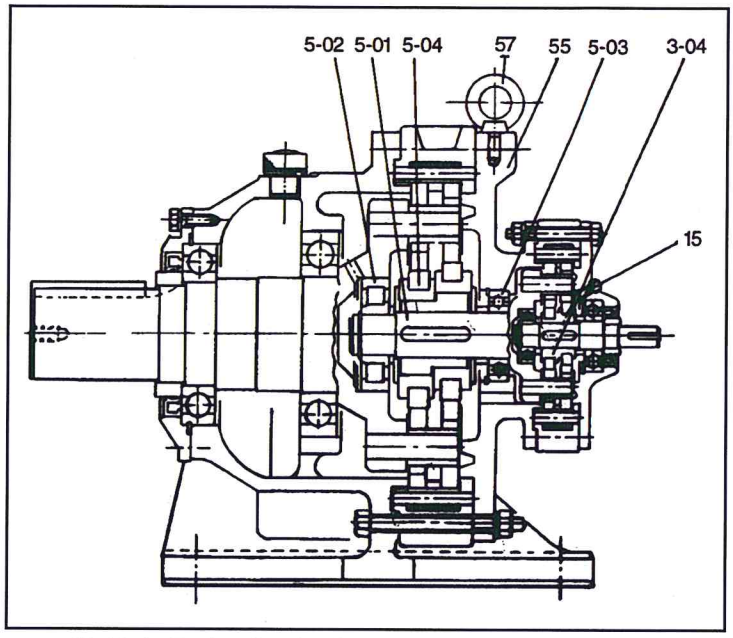

Speed Reducer — Single Disc
SM-CYCLO® single reduction, Models No. 6060-6095, employ the use of a single planetary gear (Cycloid Disc) and a balance weight.

Multiple Reduction Reducers
Multiple reduction SM-CYCLO® Reducers are a combination of standard reduction mechanism assemblies connected using an intermediate shaft (Part No. 5-01) and intermediate cover (Part No. 55) between them.

Table A-2. Frame Sizes and Ratio Combination of Double Reduction Models

Frame Size Combination

Frame Size	Second Stage	First Stage
6060DA	6060	6060
6065DA	6065	6065
6070DA	6070	6065
6075DA	6075	6065
6090DA	6090	6075
6095DA	6095	6075
6100DA	6100	6075
6105DA	6105	6075
6120DA	6120	6075
6120DB	6120	6095
6125DA	6125	6075
6125DB	6125	6095
6130DA	6130	6075
6130DB	6130	6095
6130DC	6130	6105
6135DA	6135	6075
6135DB	6135	6095
6135DC	6135	6105
6140DA	6140	6075
6140DB	6140	6095
6140DC	6140	6105
6145DA	6145	6075
6145DB	6145	6095
6145DC	6145	6105
6160DA	6160	6095
6160DB	6160	6105
6160DC	6160	6125
6165DA	6165	6095
6165DB	6165	6105

Frame Size	Second Stage	First Stage
6165DC	6165	6125
6170DA	6170	6095
6170DB	6170	6105
6170DC	6170	6125
6175DA	6175	6095
6175DB	6175	6105
6175DC	6175	6125
6180DA	6180	6105
6180DB	6180	6135
6185DA	6185	6105
6185DB	6185	6135
6190DA	6190	6125
6190DB	6190	6135
6195DA	6195	6125
6195DB	6195	6135
6205DA	6205	6125
6205DB	6205	6135
6215DA	6215	6135
6215DB	6215	6165
6225DA	6225	6135
6225DB	6225	6175
6235DA	6235	6165
6235DB	6235	6185
6245DA	6245	6165
6245DB	6245	6185
6255DA	6255	6175
6255DB	6255	6195
6265DA	6265	6195
6275DA	6275	6195

Reduction Ratio Combination

Total Ratio	Second Stage Ratio	First Stage Ratio
104	13	8
121	11	11
143	13	11
165	15	11
195	15	13
231	21	11
273	21	13
319	29	11
377	29	13
473	43	11
559	43	13
649	59	11
731	43	17
841	29	29
1003	59	17
1247	43	29
1479	87	17
1849	43	43
2065	59	35
2537	59	43
3045	87	35
3481	59	59
4437	87	51
5133[1]	87	59
6177	87	71
7569	87	87

Note: [1] For frame sizes 6205DA, DB or DC ~ 6265DA, DB or DC, second stage ratio is 59 and first stage ratio is 87.

LUBRICATION

Standard Type Mounted Reducer (Slow Speed Shaft Horizontal)[1,2]

Table A-3. Horizontal Mounted Single Reduction Reducers

Frame Size \ Reduction Ratio	3	5	6	8	11	23	15	17	21	25	29	35	43	51	59	71	87	119
6060 6065	Grease Lubricated (G)		Maintenance-Free Grease Lubrication (MF)															
6070 6075															59			
6080 6085																	87	
6090 6095																		
6100 6105 610H																		
6110 6115																		
6120 6125 612H																		
6130 6135	Oil Bath Lubrication (PB)																	
6140 6145 614H																		
6160 6165 616H																		
6170 6175																		
6180 6185																		
6190 6195																		
6205																		
6215																		
6225																		
6235																		
6245																		
6255																		
6265																		
6275																		

Table A-4. Horizontal Mounted Double Reduction Reducers

Frame Size \ Reduction Ratio	104	121	143	165	195	231	273	319	377	473	559	649	731	841	1003	1015	1247	1479	1849	2065	2537	3045	3481	4437	5133	6177	7569
6060DA 6065DA	Maintenance-Free Grease Lubrication (MF)																										
6070DA 6075DA																					2537						
6090DA 6095DA																									5133		
6100DA 6105DA																											
6120DA 6120DB																											
6125DA 6125DB																											
6130DA 6135DA	Grease Lubrication (G)																										
6130DB 6135DB																											
6130DC 6135DC																											
6140DA 6140DB 6140DC																											
6145DA 6145DB 6145DC																											
6160DA 6165DA																											
6160DB 6165DB																											
6170DA 6175DA																											
6170DB 6175DB																											
6180DA 6185DA																											
6160DC 6165DC	Oil Bath Lubrication (PB)																										
6170DC 6175DC																											
6180DB 6185DB																											
6190DA 6195DA																											
6190DB 6195DB																											
6205DA 6205DB				165																							
6215DA 6215DB		121																									
6225DA 6225DB																											
6235DA 6235DB																											
6245DA 6245DB																											
6255DA 6255DB																											
6265DA																											
6275DA									377																		

Notes: [1] Tables A-3 and A-4 show the standard lubrication method when the Cyclo drive is driven at the standard input speed.
[2] Ratios shown in white in Tables A-3 and A-4 are unavailable for the given unit sizes.

LUBRICATION

Standard Vertical Mounted Reducer (Slow Speed Shaft Vertical)[1,2,3]

Table A-5. Vertical Mounted Single Reduction Reducer

Frame Size \ Reduction Ratio	3	5	6	8	11	13	15	17	21	25	29	35	43	51	59	71	87	119
6060 6065	Grease Lubricated (G)		Maintenance-Free Grease Lubrication (MF)															
6070 6075															59			
6080 6085																	87	
6090 6095																		
6100 6105																		
6110 6115																		
6120 6125																		
6130 6135			Oil Bath Lubrication (PB)															
6140 6145																		
6160 6165			Forced Oil Lubrication (P)															
6170 6175																		
6180 6185																		
6190 6195																		
6205																		
6215																		
6225																		
6235																		
6245																		
6255																		
6265																		
6275											TP		TP		TP		TP	

TP: Positive Displacement Pump Lubrication (see Table A-16.)

Table A-6. Vertical Mounted Double Reduction Reducer

Frame Size \ Reduction Ratio	104	121	143	165	195	231	273	319	377	473	559	649	731	841	1003	1015	1247	1479	1849	2065	2537	3045	3481	4437	5133	6177	7569
6060DA 6065DA	Maintenance-Free Grease Lubrication (MF)																										
6070DA 6075DA																					2537						
6090DA 6095DA																									5133		
6100DA 6105DA																											
6120DA 6120DB 6125DA 6125DB																											
6130DA 6135DA	Grease Lubrication (G)																										
6130DB 6135DB																											
6130DC 6135DC																											
6140DA 6140DB 6140DC																											
6145DA 6145DB 6145DC																											
6160DA 6165DA																											
6160DB 6165DB																											
6170DA 6175DA																											
6170DB 6175DB																											
6180DA 6185DA																											
6160DC 6165DC									473																		
6170DC 6175DC														841													
6180DB 6185DB															1015												
6190DA 6195DA																				2065							
6190DB 6195DB																											
6205DA 6205DB				165									Forced Oil Lubrication (P)						1849								
6215DA 6215DB		121																			2537						
6225DA 6225DB																											
6235DA 6235DB																											
6245DA 6245DB		(P)																									
6255DA 6255DB																											
6265DA																											
6275DA									TP : Positive Displacement Pump Lubrication (see Table A-16)																		

Notes: [1] Please consult the factory for applications where the slow speed shaft is up.
[2] Tables A-5 and A-6 show the standard lubrication method when the Cyclo drive is driven at the standard input speed.
[3] Ratios shown in white in Tables A-5 and A-6 are unavailable for the given unit sizes.

Lubricants

Grease Lubricated Models

Those models listed in Tables A-3 ~ A-6 as grease lubricated are filled with grease before shipment to the customer and are ready for use.

Table A-7. Standard Greases[1]

Ambient Temperature[2]		SM-Cyclo® Speed Reducer
°F	°C	Shell Oil
14 to 122	-10 to 50	Shell Alvania® Grease 2 (NLGI Grade #2)

Table A-8. Grease Replenishment and Change Interval

Model	Condition		Interval[3]
Single and Double Reduction Maintenance Free Type	Replenishment		NOT REQUIRED
	Overhaul[4]		Every 20,000 Hours or Every 4 ~ 5 Years
Double Reduction	Replenishment	Less Than 10 Hours Per Day Operation	Every 3 ~ 6 Months
		10 ~ 24 Hours Per Day Operation	Every 500 ~ 1000
	Change	Speed Reducer Mechanism, High Speed Shaft Bearings (Speed Reducer Type)	Every 2 ~ 3 Years
		Slow Speed Shaft Bearings	Every 3 ~ 5 Years

Replenishment and Change Guidelines

Replenish grease to the reduction mechanism 1/3 to 1/2 of the quantity listed in Table A-9 or A-10 for the first reduction stage at the interval recommended in Table A-8.

When the unit is disassembled for overhauling, refill with the grease quantities indicated in Table A-9 or A-10. Or alternatively, 80% of the space around the reduction mechanism and slow speed shaft bearings of single reduction units, and 50% around the reduction mechanism of both the first and second stage of double reduction units.

Slightly larger quantities may be supplied to lower reduction ratio units, and somewhat smaller quantities for high reduction ratio units.

Apply grease liberally to the central part (i.e., around the eccentric bearings) of the mechanism. Apply grease to both the slow speed and high speed shaft bearings as you would to ordinary bearings at the time of re-assembly.

If excessive grease is added, agitation heating of the grease will raise the operating temperature of the unit. Avoid excessive greasing, but do not supply an insufficient amount of grease. When the grease is insufficient, it will raise the unit's operating temperature due to breakdown of the lubrication films on the eccentric bearing. In this case, if the operating temperature rises, supply grease immediately.

Table A-9. Single Reduction Grease Quantities – oz. (g.)

Frame Size	6060 6065	6070 6075	6080 6085	6090 6095	6100 6105 610H	6110 6115	6120 6125 612H
Speed Reduction Mechanism	0.9 (25)		2.3 (65)	3.2 (90)	4.9 (140)	7.1 (200)	11.6 (330)
Slow Speed Shaft Bearing	1.2 (35)		2.5 (70)	3.5 (100)		3.2 (90)	4.2 (120)

Notes: [1] Avoid the use of grease other than shown in Table A-7.
[2] Consult the factory when the drives are used under widely fluctuating temperatures, ambient temperatures other than those listed in Table A-7, or any other special conditions.
[3] Single reduction frame sizes 6060 ~ 612H and double reduction frame sizes 6060DA ~ 6125DB are maintenance free units. Grease replenishment is not necessary. Where longer life of the drive is expected or if re-lubricating is preferred before the recommended interval, refer to Tables A-7, A-8, A-9 and A-10.
[4] Overhauling consists of disassembling the unit, replacing the seals and gaskets, cleaning the internal parts and then repacking the unit with designated grease.

LUBRICATION

Table A-10. Double Reduction Grease Quantities – oz. (g.)

Frame Size	6060DA 6065DA	6070DA 6075DA	6090DA 6095DA	6100DA 6105DA	6120DA 6125DA	6120DB 6125DB	6130DA 6135DA	6130DB 6135DB	6130DC 6135DC	6140DA 6145DA	6140DB 6145DB	6140DC 6145DC
Speed Reduction Mechanism (1st Stage)	0.9 (25)					3.2 (90)	0.9 (25)	3.2 (90)	4.9 (140)	0.9 (25)	3.2 (90)	4.9 (140)
Speed Reduction Mechanism (2nd Stage)	0.9 (25)		3.2 (90)	4.9 (140)	11.6 (330)		15.9 (450)					
Slow Speed Shaft Bearing (2nd Stage)	1.2 (35)		3.5 (100)		4.2 (120)		10.6 (300)					

Frame Size	6160DA 6165DA	6160DB 6165DB	6160DC 6165DC	6170DA 6175DA	6170DB 6175DB	6170DC 6175DC	6180DA 6185DA	6180DB 6185DB	6190DA 6195DA	6190DB 6195DB	6205DA	6205DB
Speed Reduction Mechanism (1st Stage)	3.2 (90)	4.9 (140)	11.6 (330)	3.2 (90)	4.9 (140)	11.6 (330)	4.9 (140)	15.9 (450)	11.6 (330)	15.9 (450)	11.6 (330)	15.9 (450)
Speed Reduction Mechanism (2nd Stage)	26.5 (750)			35.3 (1000)			38.8 (1100)		52.9 (1500)			
Slow Speed Shaft Bearing (2nd Stage)	10.6 (300)			17.6 (500)			21.2 (600)		24.7 (700)			

Frame Size	6215DA	6215DB	6225DA	6225DB	6235DA	6235DB	6245DA	6245DB	6255DA	6255DB	6265DA
Speed Reduction Mechanism (1st Stage)	15.9 (450)	26.5 (750)	15.9 (450)	35.3 (1000)	26.5 (750)	38.8 (1100)	26.5 (750)	38.8 (1100)	35.3 (1000)	52.9 (1500)	
Speed Reduction Mechanism (2nd Stage)	70.5 (2000)		88.2 (2500)		141.1 (4000)		158.7 (4500)		211.6 (6000)		282.2 (8000)
Slow Speed Shaft Bearing (2nd Stage)	28.2 (800)		31.7 (900)		35.3 (1000)		38.8 (1100)		42.3 (1200)		45.9 (1300)

Oil Lubricated Models

Oil Fill Procedure

Oil lubricated models are not filled with oil prior to shipping. Before start-up, remove the oil fill plug (See Pg. A-3, Fig. A-2, Part #28) and fill the reducer with recommended oil. Refer to Tables A-11~A-14 for standard oil, allowable viscosity, quantity, and change interval. The oil level must be to the upper red line on the oil level gauge while the unit is not operating, and above the lower red line during operation. If too much oil is supplied, the unit's operating temperature will rise due to the churning heat of the oil, or oil will leak across the high speed shaft oil seal.

Before filling a vertical base type unit with oil, remove the vent plug (Pg. A-3, Fig. A-2, Part #14). After filling, apply teflon sealing tape to threads of the vent plug before installing.

When draining oil, remove drain plug (Fig. A-5, Part #46) or lower side plug of the oil level gauge.

Oil Level Gauge

The gauge must be replaced when it becomes difficult to check the oil level due to discoloration of the vinyl hose. Use the standard vinyl oil gauge for a reducer operating in ambient temperature –4°F to 100°F (–20°C to 40°C). Where the reducer is used at ambient temperatures greater than 100°F (40°C) or less than –4°F (–20°C), a glass gauge set or a dipstick is recommended.

The oil level gauge can be attached on either side of the casing on horizontal units. Attach on the side that is most convenient for checking the oil level. (The oil level gauge is usually attached on the right side when viewed from the slow speed shaft end.)

Table A-11. Standard Oils

Ambient Temperature[1,2] °F	°C	Gulf Oil	Exxon Oil	Mobil Oil	Shell Oil	BP Oil
14 to 41	-10 to 5	EP Lubricant HD 68	Spartan® EP 68	Mobilgear® 626 (ISO VG 68)	Omala® Oil 68	Energol® GR-XP 68
32 to 95	0 to 35	EP Lubricant HD 100 HD 150	Spartan® EP 100 EP 150	Mobilgear® 627, 629 (ISO VG 100, 150)	Omala® Oil 100, 150	Energol® GR-XP 100 GR-XP 150
86 to 122	30 to 50	EP Lubricant HD 220 HD 320 HD 460	Spartan® EP 220 EP 320 EP 460	Mobilgear® 630, 632 633, 634 (ISO VG 220-460)	Omala® Oil 220, 320, 460	Energol® GR-XP 220 GR-XP 320 GR-XP 460

Fig. A-5

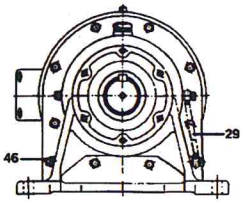

Notes: [1] Use the lower viscosity oil specified for each ambient temperature range for use in winter or relatively low ambient temperatures.
[2] Please consult the factory for consistent use in ambient temperatures other than 32°F - 104°F (0°C - 40°C).

Table A-12. Oil Fill Quantities[1]

Single Reduction					Double Reduction				
Frame Size	Mounting Configuration				Frame Size	Mounting Configuration			
	Horizontal		Vertical			Horizontal		Vertical	
	U.S. gal.	liter	U.S. gal.	liter		U.S. gal.	liter	U.S. gal.	liter
6130, 6135	0.18	0.7	0.29	1.1	6160DC, 6165DC	0.40	1.5	0.26	1.0
6140, 6145, 614H	0.18	0.7	0.29	1.1	6170DC, 6175DC	0.63	2.4	0.50	1.9
6160, 6165, 616H	0.37	1.4	0.26	1.0	6180DB, 6185DB	0.92	3.5	0.53	2.0
6170, 6175	0.50	1.9	0.50	1.9	6190DA, 6195DA	1.5	5.8	0.71	2.7
6180, 6185	0.66	2.5	0.53	2.0	6190DB, 6195DB	1.6	6.0	0.71	2.7
6190, 6195	1.1	4.0	0.71	2.7	6205DA, 6205DB	1.6	6.0	2.9	11
6205	1.5	5.5	1.5	5.7	6215DA, 6215DB	2.6	10	3.7	14
6215	2.2	8.5	2.0	7.5	6225DA, 6225DB	2.9	11	4.8	18
6225	2.6	10	2.6	10	6235DA, 6235DB	4.5	17	6.1	23
6235	4.0	15	3.2	12	6245DA, 6245DB	4.8	18	7.7	29
6245	4.2	16	4.0	15	6255DA, 6255DB	6.1	23	11.1	42
6255	5.5	21	11.1	42	6265DA	8.5	32	13.5	51
6265	7.7	29	13.5	51	6275DA	15.9	60	(15.9)	(60)
6275	14.8	56	(15.9)	(60)					

( ) with trochoid pump

Table A-13. Allowable Oil Viscosity

Minimum Allowable Viscosity To Maintain Lubricating Oil Film		80 SUS During Operation
Maximum Allowable Viscosity To Allow Easy Starting	Oil Bath	20,000 SUS At Operation Start
	Forced Oil Lubrication	10,000 SUS At Operation Start

Table A-14. Oil Change Interval

Oil Change Interval		Operation Condition
Initial Oil Change	After 500 Hours of Primary Operation	Under Every Condition
Subsequent Oil Change	Every 6 Months	Less Than 10 Hours/Day Operation
	Every 2,500 Hours	10 ~ 24 Hours/Day Operation
	Every 1 ~ 3 Months	High Ambient Temperature, High Humidity or Atmosphere of Active Gas

Forced Lubrication For Vertical Units

Table A-15. Plunger Pump Type

Small Size Pump		Large Size Pump	
Frame Size	Ratio	Frame Size	Ratio
6160, 6165, 6170, 6175, 6180, 6185, 6190, 6195	See Table A-5	6205, 6215, 6225, 6235, 6245, 6255, 6265, 6275	See Table A-5
6160DC, 6165DC, 6170DC, 6175DC, 6180DB, 6185DB, 6190DA, 6195DA, 6190DB, 6195DB	See Table A-6	6205DA, 6205DB, 6215DA, 6215DB, 6225DA, 6225DB, 6235DA, 6235DB, 6245DA, 6245DB, 6255DA, 6255DB, 6265DA	See Table A-6

Plunger Pump Lubrication

The plunger pump (Fig. A-2, Part #42) is automatically operated by a cam (Fig. A-2, Part #40) fitted on the slow speed shaft (Fig. A-2, Part #1-01). The number of pumping cam teeth required is in direct relation to the reduction ratio and frame size. Please consult the factory for input speeds other than standard.

Table A-16. Positive Displacement (Trochoid) Pump Type

Cyclo Drive			Trochoid Pump[2,3]								
Type	Frame Size	Reduction Ratio	Pump Type	Pump Motor	50 Hz Zone				60 Hz Zone			
					Flow		Max. Pressure		Flow		Max. Pressure	
					gal/min	l/min	psi	kgf/cm²	gal/min	l/min	psi	kgf/cm²
Vertical Shaft	6275	29, 43, 59, 87	TOP216HA-VB3	1 HP (0.75 kW) 4P	6.3	24.0	113.8	8	7.6	28.8	71.1	5.0
	6275DA	All	TOP204HA-VB3	1/2 HP (0.4 kW) 4P	1.6	6.0	227.6	16	1.9	7.2	163.6	11.5

Positive Displacement (Trochoid) Pump Lubrication

Forced oil lubrication is accomplished by using a positive displacement pump and motor that requires an additional electric power source. It is recommended that the main motor be interlocked with the pump motor to avoid operation without lubrication. The pump must be started 30 seconds or longer before the main motor is operated.

Notes: [1] Please consult the factory for oil quantities when the reducer/gearmotor is mounted in any other position or angle.
[2] Consult the factory when using an inverter.
[3] A relief valve, pressure set at 42.7 psi (3 kgf/cm²), is a standard attachment on the trochoid pump.

OIL LEVEL DIMENSIONS

Foot Mount Horizontal Type
Fig. A-6

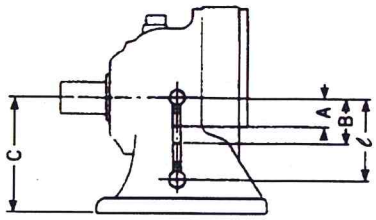

Frame Size:
Only 6130 ~ 6145

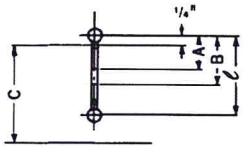

Table A-17. Oil Level Dimensions (Inches)

Frame Size	A	B	C	ℓ
6130-6135	1.38	2.17	5.91	4.65
6140, 6145, (614H)	1.38	2.17	5.91 (6.30)	4.65
6160-6165, (616H)	1.57	2.76	6.30 (7.87)	3.70
6160DC-6165DC	1.18	1.77	6.30	3.70
6170-6175	1.97	3.35	7.87	4.96
6170DC-6175DC	1.18	1.77	7.87	4.96
6180-6185	2.17	3.94	8.66	5.91
6180DB-6185DB	1.38	2.17	8.66	5.91
6190-6195	2.26	3.25	9.84	6.61
6190DA-6195DA	1.18	1.77	9.84	6.61
6190DB-6195DB	1.38	2.18	9.84	6.61
6205	2.12	3.19	9.84	6.06
6205DA	1.26	1.93	9.84	6.06
6205DB	1.26	2.13	9.84	6.06
6215	2.05	3.03	10.84	6.85
6215DA	1.18	1.97	10.43	6.85
6215DB	1.57	2.76	10.43	6.85
6225	2.25	3.43	11.03	6.85
6225DA	1.26	2.05	11.03	6.85
6225DB	1.85	3.43	11.03	6.85
6235	2.48	3.47	11.81	7.64
6235DA	1.57	2.75	11.81	7.64
6235DB	1.97	3.35	11.81	7.64
6245	2.76	3.78	13.19	8.46
6245DA	1.65	2.72	13.19	8.46
6245DB	2.00	3.35	13.19	8.46
6255	3.19	4.17	14.76	9.02
6255DA	1.97	3.35	14.76	9.02
6255DB	2.05	3.23	14.76	9.02
6265	3.23	4.21	15.75	10.16
6265DA	2.28	3.27	15.75	10.16
6275	3.35	4.53	21.26	11.22
6275DA	2.26	3.25	21.26	11.22

Base Mount Vertical Type
Frame Size: 6130 ~ 614H
Fig. A-7

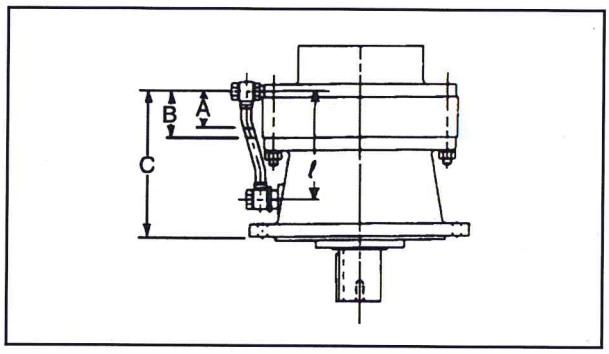

Base Mount Vertical Type
Table A-18. Oil Level Dimensions (Inches)
Frame Size: 6130 ~ 614H

Frame Size	A	B	C	ℓ
6130-614H	1.85	2.72	7.52	5.79

Base Mount Vertical Type
Frame Size: 6160 ~ 6275
Fig. A-8

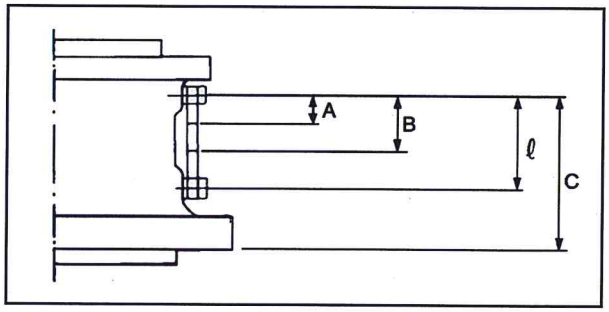

Base Mount Vertical Type
Table A-19. Oil Level Dimensions (Inches)
Frame Size: 6160 ~ 6275

Frame Size	A	B	C	ℓ
6160-6165, 616H	1.02	1.42	4.68	2.72
6170-6175	1.69	2.48	6.02	3.78
6180-6185	1.93	2.72	6.81	4.25
6190-6195	2.09	3.27	7.87	5.47
6205	1.46	2.05	7.09	3.54
6215	1.46	2.05	7.09	3.54
6225	1.46	2.05	7.87	3.54
6235	1.46	2.05	7.72	3.54
6245	1.46	2.05	7.96	3.54
*6255	4.33	4.92	19.76	6.57
*6265	4.65	5.24	21.69	7.17
6275	1.97	2.76	13.39	5.51

*Note: V6255 & V6265 Oil Gauge is on the Ring Gear Housing instead of V-Casing.

BEARINGS, OIL SEALS, GASKETS

Fig. A-9

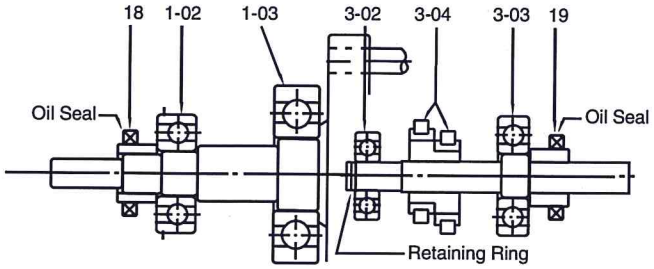

Slow Speed Shaft High Speed Shaft

Table A-20. Slow Speed Shaft Bearing

Frame Size		Slow Speed Shaft	
Single Reduction	Double Reduction	Bearing A Part #1-02	Bearing B Part #1-03
6060, 6065	6060DA, 6065DA	6204Z	6909
6070, 6075	6070DA, 6075DA	6204Z	6909
6080, 6085	–	6305Z	6009
6090, 6095	6090DA, 6095DA	6306Z	16011
6100, 6105, 610H	6100DA, 6105DA	6306Z	16011
6110, 6115	–	6307Z	6011
6120, 6125, 612H	6120DA, 6125DA, 6120DB, 6125DB	6308Z	6013
6130, 6135	6130DA, 6135DA, 6130DB, 6135DB, 6130DC, 6135DC	6211NR	6213
6140, 6145,614H	6140DA, 6145DA, 6140DB, 6145DB, 6140DC, 6145DC	22211EXNR	6213
6160, 6165	6160DA, 6165DA, 6160DB, 6165DB, 6160DC, 6165DC	3TM-6213NR[1]	6215[1]
6170, 6175	6170DA, 6175DA, 6170DB, 6175DB, 6170DC, 6175DC	6216NR[1]	6218[1]
6180, 6185	6180DA, 6185DA, 6180DB, 6185DB	6218NR[1]	6220[1]
6190, 6195	6190DA, 6195DA, 6190DB, 6195DB	6221NR[1]	6026[1]
6205	6205DA, 6205DB	22220BNRC2	6222C2
6215	6215DA, 6215DB	23022BNRC2	6224C2
6225	6225DA,6225DB	23024BNRC2	6226C2
6235	6235DA, 6235DB	23026BNRC2	NUP228C2
6245	6245DA, 6245DB	23028BNRC2	NUP230C2
6255	6255DA, 6255DB	23032BNRC2	NUP234C2
6265	6265DA	23034BNRC2	NUP236C2
6275	6275DA	23136BNXR	6340

Table A-21. High Speed Shaft Bearing

Frame Size		High Speed Shaft			
Single Reduction	Double Reduction	Bearing C Part #3-02	Bearing D Part #3-03	Eccentric Part #3-04	Qty.
6060, 6065	6060DA, 6065DA, 6070DA, 6075DA	6301	6301Z	607YXX	1
6070, 6075	6090DA, 6095DA, 6100DA, 6105DA, 6120DA, 6125DA, 6130DA, 6135DA, 6140DA, 6145DA	6301	6301Z	607YXX	1
6080, 6085	–	6301SH	6302Z	6004RSH2ZZC3	1
6090, 6095	6120DB, 6125DB, 6130DB, 6135DB, 6140DB, 6145DB, 6160DA, 6165DA, 6170DA, 6175DA	6302RSH2	6302Z	Refer to Table A-22	1
6100, 6105, 610H	6130DC, 6135DC, 6140DC, 6145DC, 6160DB, 6165DB, 6170DB, 6175DB, 6180DA, 6185DA	6302RSH2	6302Z		
6110, 6115	–	6302RSH2	6302Z	611YSS, 611GSS	2
6120, 6125, 612H	6160DC, 6165DC, 6170DC, 6175DC, 6190DA, 6195DA, 6205DA	6304	6305Z	Refer to Table A-22	1
6130, 6135	6180DB, 6185DB, 6190DB, 6195DB, 6205DB, 6215DA, 6225DA	6305	6306		
6140, 6145, 614H	–	6305R	6306		
6160, 6165, 616H	6215DB, 6235DA, 6245DA	6307R	6308		
6170, 6175	6255DA, 6255DB	6406	6407	617YSX	2
6180, 6185	6235DB, 6245DB	6407	6409	618YSX	2
6190, 6195	6255DB, 6265DA, 6275DA	6408	6411	619YSX	2
6205	–	NJ310EV7	21311V1	620GXX	2
6215	–	NJ311EV16	21311V1	621GXX	2
6225	–	NJ312EV11	21312V1	622GXX	2
6235	–	NJ313EV11	21314V1	623GXX	2
6245	–	NJ314EV7	21315V1	624GXX	2
6255	–	NJ316EV1	21318V1	625GXX	2
6265	–	NJ317EV1	21318V1	626GXX	2
6275	–	NJ417	22222BL1	627GXX	2

Note: [1] For grease lubricated models, a sealed bearing should be used, which changes the following letters in the part number to those shown in bold: NR (Std.) – **ZNR;** NXR – **ZNXR;** None – add **Z**.

BEARINGS, OIL SEALS, GASKETS

Fig. A-10

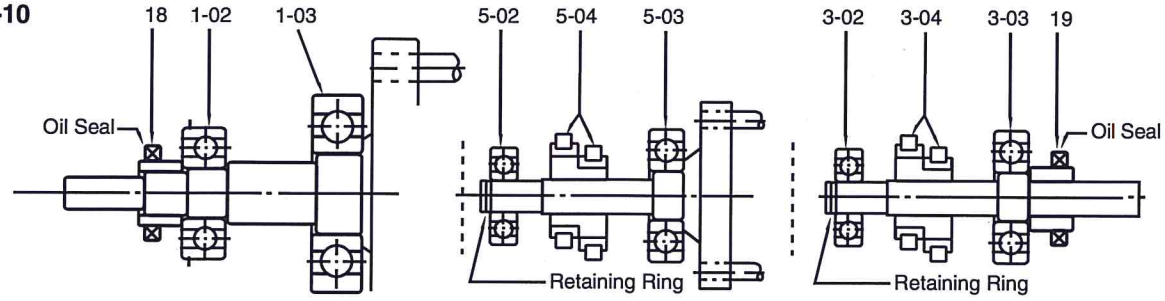

Slow Speed Shaft | **Intermediate Shaft** (For Double Reduction Units) | **High Speed Shaft**

Table A-22. Eccentric Bearing

	Frame Size					
High Speed Shaft, Motor Shaft Part #3-04	**6090, 6095**	**6100, 6105**	**6120, 6125**	**6130, 6135**	**6140, 6145**	**6160, 6165**
Intermediate Shaft Part #5-04 / Reduction Ratio	**6090DA 6095DA**	**6100DA 6105DA**	**6120DA, 6125DA 6120DB, 6125DB**	**6130DA, 6135DA 6130DB, 6135DB 6130DC, 6135DC**	**6140DA, 6145DA 6140DB, 6145DB 6140DC, 6145DC**	**6160DA, 6165DA 6160DB, 6165DB 6160DC, 6165DC**
6	60906YRX	6100608YRX	6120608YRX	61406-11YSX	61406-11YSX	6160608YRX2
8	60908-15YSX	6100608YRX	6120608YRX	61406-11YSX	61406-11YSX	6160608YRX2
11	60908-15YSX	61011-15YRX	6121115YSX	61406-11YSX	61406-11YSX	61611-15YSX
13	60908-15YSX	61011-15YRX	6121317YSX	61413-17YSX	61413-17YSX	61611-15YSX
15	60908-15YSX	61011-15YRX	6121115YSX	61413-17YSX	61413-17YSX	61611-15YSX
17	60917YSX	61017YSX	6121317YSX	61413-17YSX	61413-17YSX	61617-25YSX
21	60921YSX	61021YRX	61221YRX	6142125YSX	6142125YSX	61617-25YSX
25	6092529YSX	6102529YRX	6122529YSX	6142125YSX	6142125YSX	61617-25YSX
29	6092529YSX	6102529YRX	6122529YSX	6142935YSX	6142935YSX	6162935YSX
35	60935YSX	61035YRX	61235YRX	6142935YSX	6142935YSX	6162935YSX
43	60943YSX	61043YSX	61243YSX	61443-59YSX	61443-59YSX	6164351YSX
51	60951YRX	61051YRX	6125159YSX	61443-59YSX	61443-59YSX	6164351YSX
59	60959YSX	61059YRX	6125159YSX	61443-59YSX	61443-59YSX	61659YSX
71	60971YRX	61071YRX	6127187YSX	6147187YSX	6147187YSX	61671YRX2
87	60987YSX	61087YRX	6127187YSX	6147187YSX	6147187YSX	61687YSX
119	609119YSX	610119YSX	–	–	–	–

Fig. A-11

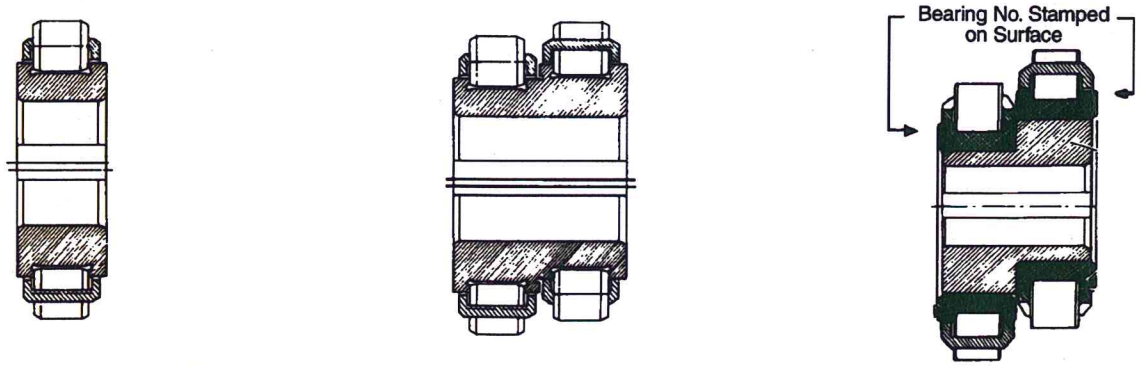

Eccentric Bearing Single Type Frame Sizes | **Eccentric Bearing Double Type Frame Sizes** | **Eccentric And Bearings For Eccentric Frame Sizes**

Table A-23. Intermediate Shaft Bearing

Frame Size	Intermediate Shaft				Frame Size	Intermediate Shaft			
	Bearing F Part #5-02	Bearing G Part #5-03	Eccentric Bearing Part #5-04	Qty.		Bearing F Part #5-02	Bearing G Part #5-03	Eccentric Bearing Part #5-04	Qty.
6060DA, 6065DA	6301	6909	607YXX	1	6180DA, 6185DA	6407	6208	618YSX	2
6070DA, 6075DA	6301	6909	607YXX	1	6180DB, 6185DB	6407	6213	618YSX	2
6090DA, 6095DA	6302RSH2	6007	Refer to Table A-22	1	6190DA, 6195DA	6408	6210	619YSX	2
6100DA, 6105DA	6302RSH2	6007			6190DB, 6195DB	6408	6213	619YSX	2
6120DA, 6125DA	6304	6007			6205DA	NJ310EV7	6210	620GXX	2
6120DB, 6125DB	6304	6205			6205DB	NJ310EV7	6310	620GXX	2
6130DA, 6135DA	6305	6007			6215DA, 6215DB	NJ311EV16	6311	621GXX	2
6130DB, 6135DB	6305	6206			6225DA, 6225DB	NJ312EV11	6313	622GXX	2
6130DC, 6135DC	6305	6206			6235DA, 6235DB	NJ313EV11	6314	623GXX	2
6140DA, 6145DA	6305	6007			6245DA	NJ314EV7	6315	624GXX	2
6140DB, 6145DB	6305	6206			6245DB	NJ314EV7	6316	624GXX	2
6140DC, 6145DC	6305	6206			6255DA, 6255DB	NJ316EV1	6318	625GXX	2
6160DA, 6165DA	6307R	6207			6265DA	NJ317EV1	6320	626GXX	2
6160DB, 6165DB					6275DA	NJ417	22220RH	627GXX	2
6160DC, 6165DC	6307R	6208							
6170DA, 6175DA	6406	6207	617YSX	2					
6170DB, 6175DB									
6170DC, 6175DC	6406	6208	617YSX	2					

Table A-24. Oil Seals

Frame Size	Slow Speed Shaft Part #18				High Speed Shaft Part #19		
	Type[1]	Dimension (mm)	Quantity		Type[1]	Dimension (mm)	Quantity
		(I.D. x O.D. x W)	Horizontal Shaft	Vertical Shaft		(I.D. x O.D. x W)	
6060, 6065	D	30 x 47 x 8	1	1	S	17 x 30 x 6	1
6070, 6075	D	30 x 47 x 8	1	1	S	17 x 30 x 6	1
6080, 6085	D	45 x 62 x 9	1	1	S	17 x 30 x 6	1
6090, 6095	D	50 x 72 x 12	1	1	S	20 x 35 x 7	1
6100, 6105	D	50 x 72 x 12	1	1	S	20 x 35 x 7	1
6110, 6115	D	55 x 80 x 12	1	1	S	20 x 35 x 7	1
6120, 6125	D	65 x 90 x 13	1	1	D	32 x 52 x 8	1
6130, 6135	D	68 x 88 x 12	1	2	D	38 x 58 x 11	1
6140, 6145	D	65 x 88 x 12	1	2	D	38 x 58 x 11	1
6160, 6165	D	85 x 110 x 13	1	2	D	55 x 78 x 12	1
6170, 6175	D	95 x 130 x 15	1	2	D	60 x 82 x 12	1
6180, 6185	D	110 x 145 x 15	1	2	D	65 x 88 x 12	1
6190, 6195	D	120 x 155 x 16	1	2	S	70 x 88 x 10	1
6205	D	120 x 155 x 16	1	2	S	70 x 88 x 10	1
6215	D	130 x 160 x 14	1	2	S	75 x 100 x 13	1
6225	D	145 x 175 x 14	1	2	S	75 x 100 x 13	1
6235	D	160 x 190 x 16	1	2	S	85 x 110 x 13	1
6245	D	170 x 200 x 16	1	2	S	95 x 120 x 13	1
6255	D	190 x 225 x 16	1	2	S	110 x 140 x 14	1
6265	D	200 x 240 x 20	1	2	S	110 x 140 x 14	1
6275	D	230 x 270 x 20	1	2	S	120 x 150 x 14	1

Note: [1] D indicates lip (dust proof and seal lip) type.

DISASSEMBLY/ASSEMBLY

Disassembly

SM-CYCLO® Reducers are designed to provide maximum ease when disassembing and reassembling; they require no special maintenance skills.

1. Remove the complete SM-CYCLO® Reducer with adaptor (motorized type) from the driven machine.

2. Remove the plug at the bottom of the oil gauge to drain all oil from the unit.

3. Remove the cooling fan cover and fan from those Speed Reducers (not motorized) equipped with a cooling fan, and stand the unit on a solid base with its high speed shaft side down. Remove the through bolts for the high speed end shield, ring gear housing, and lift the slow speed side, thus separating the unit into two parts so that the inner mechanism can be removed (Figs. A-12 ~ A17).

Note: If the reducer is motorized (C-adaptor and coupling) remove the motor and coupling before following the procedure outlined above. As a final step, remove the adaptor and cooling fan.

4. If the unit will not separate easily, gently drive a wedge at the line X shown in Fig. A-1 on page A-3 (if this produces a burr, be sure to remove it before reassembly).

5. To lift the slow speed side, attach an eyebolt to the tapped hole on the end of the slow speed shaft and use a hoist or chain block (Fig. A-12).

6. Take out the slow speed shaft rollers, item 1-06, page A-3 (Fig. A-13). Check the slow speed shaft pins (1-01) to see whether any rollers have adhered to them.

7. Using both hands, lift out the top cycloid disc (2-04) on the slow speed side (Fig. A-14).

8. Remove the spacer ring (2-05).

9. The eccentric (3-04) can be removed from the input shaft (3-01) after taking out the retaining ring (3-10) and the inner bearing raceway (Figs. A-15, A-16).

Note: In certain sizes, the eccentric bearings are roller bearings without a retainer. Remove bearings of the top disc before proceeding with the next step.

10. Take out the second disc located on the motor side. (Also remove second disc bearings and eccentric with inner bearing raceway if required.)

11. Remove the ring gear housing (2-01).

12. Follow these steps to remove the slow speed shaft (1-01) with its bearings from the casing (26): (a) Remove the horizontal oil seal housing (25). (b) With a wooden or hard rubber mallet, rap the inner end of the slow speed shaft to expose the retaining ring* from the outer raceway of the bearing. (c) Remove the retaining ring. (d) Rap the outer end of the slow speed shaft with a wooden or hard rubber mallet, and remove it from the casing.

13. The high speed shaft (3-01) with bearings is removed from the high speed shaft end shield (8) by tapping the shaft end after first taking off the retaining ring (3-11).

14. The cycloid disc is made from heat-treated bearing steel and the spacer ring is cast iron. Take care not to strike them together while handling.

The above instructions cover complete disassembly. In ordinary cases, however, only the removal of the cycloid discs and the eccentric, and removal of the slow speed shaft from the slow speed end cap is necessary.

***Note:** Retaining ring is part of bearing A (Part No. 1-02).

Assembly

SM-CYCLO® Reducers are reassembled by reversing the disassembly procedure. Care must be taken to exclude dust or foreign matter from the moving parts, and to see that gaskets are properly placed to make the assembly oil-tight.

Following are some helpful points to remember when assembling SM-CYCLO® Reducers.

1. Set the ring gear housing and insert the ring gear pins and rollers; then test-rotate the pins and rollers by hand. (Apply grease liberally to the ring gear pins and rollers before they are inserted in grease lubricated SM-CYCLO® Reducers.)

2. Cycloid discs are a matched pair. Each carries the same number stamped on one side of the disc.

3. Set the cycloid disc with the stamped number face up as shown in Fig. A-17.

4. Insert the spacer (3-07) and then insert the eccentric with bearings by rapping with a wooden or hard rubber mallet (Fig. A-16).

5. Insert the other spacer and the inner bearing raceway. Secure them with the retaining ring (Fig. A-15).

6. Set the spacer ring in place.

7. Insert top disc in such a way that the mark is 180° opposed to the mark on the bottom disc (Fig. A-13).

8. Insert slow speed shaft rollers (Fig. A-13).

9. Put the slow speed shaft pins into the rollers (Fig. A-12). The above instructions are for **eccentric bearings with retainer.** Following are the instructions suggested for **roller bearings without retainer.**

a. First insert the eccentric with inner raceways of bearings by rapping with a wooden or hard rubber mallet.

Fig. A-12

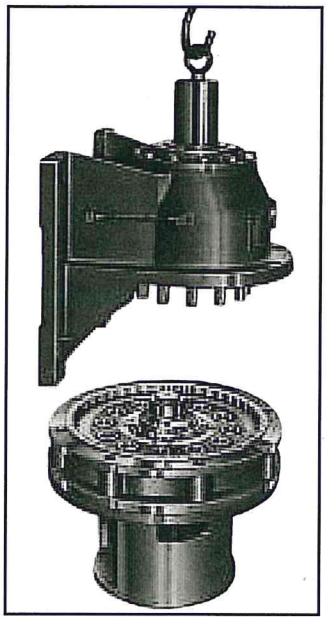

Fig. A-13

Fig. A-14

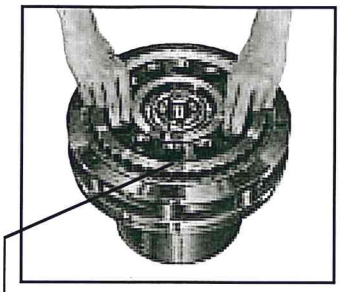

Fig. A-15

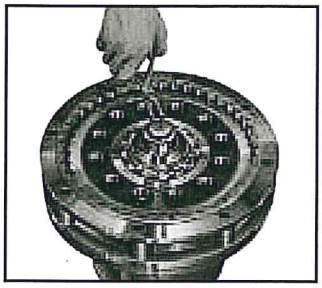

Fig. A-16

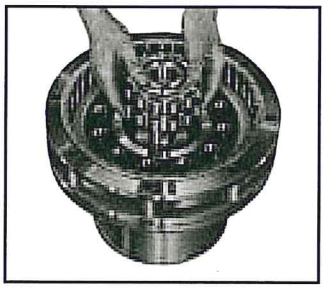

Fig. A-17

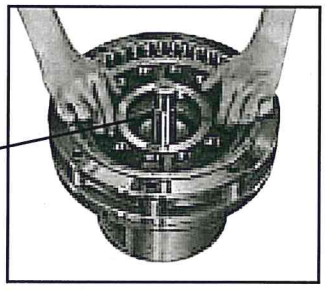

Note: Insert second disc with number facing slow speed side, exactly 180° opposed to number on first disc.

Note: Set disc with number facing slow speed side.

b. Apply grease to the raceway of the eccentric on the disc. Fix the rollers and set disc in place.

c. Insert the spacer ring and set second disc in such a way that mark is 180° opposed to mark on the bottom disc.

Eccentric Bearing Replacement Precautions

The eccentric bearings are specially designed for installation on SM-CYCLO® Reducers. They are special roller bearings without outer raceways (refer to the list of bearings on pages A-12 ~ A-13).

It is necessary to insert replacement bearings with numbered surfaces of the inner raceways facing outward. Note that incorrect insertion of the bearings (i.e., insertion of bearings with numbered surfaces inside) causes trouble.

Disassembly and Assembly of Sizes 6060-6095 SM-CYCLO® Reducers

Small sizes 6060-6095 have a single disc system, so they differ in construction from larger sizes in the following ways:

1. A balance weight is provided in lieu of the two-disc system. Refer to figure A-18.

2. The balance weight must be positioned exactly 180° as opposed to that of the eccentric.

3. There are no end plates on either side of the eccentric. In all other respects, 6060-6095 have exactly the same construction as the larger sizes. Follow the instructions given under "Disassembly and Assembly".

Disassembly Of Output Side (6060-612H)

1. With casing supported, tap output shaft until it is disengaged from casing.

2. Remove bearing "A" by using pulling tool.

3. Replace all bearings, gaskets and seals when reassembling. (Pages A-11 ~ A-13).

Assembly Of Output Side (6060-612H)

1. Assemble the "B" bearing (Part No. 1-03) on the slow speed shaft (Part No. 1-01). Heating of "B" bearing is recommended for easier assembly.

Note: Do not exceed temperature of 200°F.

2. Assemble the casing (Part No. 26) over the slow speed shaft (Part No. 1-01), being sure to maintain "X" (Fig. A-18).

3. Carefully tap bearing "A" (Part No. 1-02) onto the slow speed shaft (Part No. 1-01) until the bearing is flush with the shoulder of the casing.

4. Place the collar (Part No. 1-04H) onto the slow speed shaft (Part No. 1-01). Heating the collar is recommended for easier assembly.

5. Insert the oil seal (Part No. 18), lip in, into the casing (Part No. 26).

Note: Measure for dimension "X" preferably in 3 places to insure proper spacing.

Fig. A-18

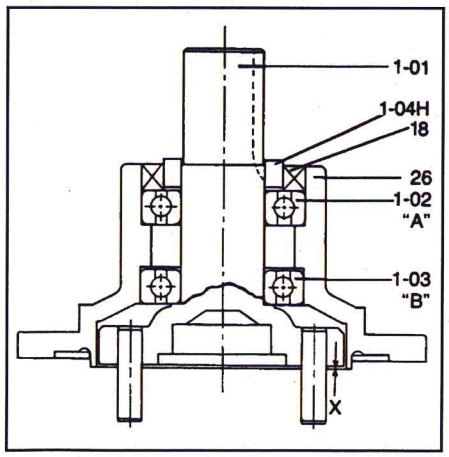

X" Dimension (inches)

Frame Size	Dimension
6060/65	0.046 ± 0.007
6070/75 6080/85	0.042 ± 0.007
6090/95	0.046 ± 0.007
6100/05 610H	0.046 ± 0.007
6110/15/20/ 25, 612H	0.042 ± 0.007

DAILY INSPECTION

1. Visually check the oil level gauge on the vertical unit, forced-lubricated type. Check lubrication flow by viewing piping set and oil signal (Part No. 41). Faulty operation is caused by a lack of lubrication oil, damage to the plunger pump (Part No. 42) or the positive displacement pump (Part No. 43) or the clogging of pipes, etc. In case of faulty operation, stop and inspect the unit immediately.

2. A temperature rise of approximately 105°F (40.6°C) above ambient on the surface of the ring gear housing (Part No. 2-01) is allowable if the temperature fluctuation is small. If temperature rises rapidly from a stable condition, add the recommended oil or grease (Tables A-7 and A-11). A rapid temperature rise may be caused from a lack of lubrication.

If after lubricating unit, the problem persists, stop operation and consult factory.

3. When an abnormal sound is heard from inside the unit, stop operation and inspect the unit.

4. If the lubrication oil leaks, replace the damaged or worn part with a new one. (Refer to Part No. 1-04H, Page A-3.)

Ordering Correct Replacement Units Or Parts

The SM-CYCLO® is fully standardized to offer maximum part interchangeability among models of the same frame size. However, there are many frame sizes, models and types in the production range of SM-CYCLO®. Therefore to get correct replacement units or parts, proper information to identify the speed reducer in question is essential. The name plate, which is secured to the body of the drive, provides this identifying data.

Please give the full description shown on the name plate to your distributor. Be sure to include the *SERIAL NUMBER* and *MODEL NUMBER*. This information, along with our production records, will enable us to provide you with the correct replacement unit or parts.

Name Plate on SM-CYCLO®

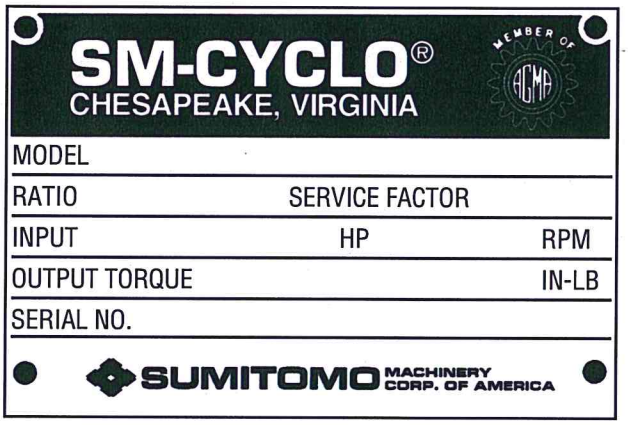

Storage And Operation After Storage

Storage 6 Months–1 Year

Oil-Lubricated

1. Completely fill unit(s) with a rust-preventive oil (NP20 or equivalent) or a circulating oil (Shell VSI No. 100 or equivalent).

2. At approximately 3 month intervals, rotate the input shaft a sufficient number of times to insure all internal components remain coated. (The higher the ratio, the greater the amount of rotations needed for proper lubrication.)

Grease-Lubricated

Grease-lubricated models do not require any special attention during storage. (Inspect unit before operation.)

Note: For both the *Oil-Lubricated* and *Grease-Lubricated* models, if units are to be stored for a period exceeding 1 year, consult factory.

Operation After Storage 6 Months–1 Year

Oil-Lubricated

1. Completely drain the rust preventive, or circulating oil from unit.

2. Flush unit with the recommended operating oil as shown in Table A-11.

3. After flushing, fill the unit to the proper oil level with the recommended lubricating oil.

Grease-Lubricated

Add ½ of the recommended quantity of new grease as shown in Table A-10.

Note: Consult the factory before operating units stored for periods greater than 1 year.

TROUBLESHOOTING AND REPAIR

This troubleshooting guide is to help you identify and overcome common problems of reducers. If you have a problem not listed below, please consult factory.

PROBLEM WITH THE REDUCER		POSSIBLE CAUSES	SUGGESTED REMEDY
Runs Hot	Overloading	Load exceeds the capacity of the reducer.	Check rated capacity of reducer, replace with unit of sufficient capacity or reduce load.
	Improper Lubrication	Insufficient lubrication.	Check lubricant level and adjust up to recommended levels.
		Excessive lubrication.	Check lubricant level and adjust down to recommended level.
		Wrong lubricant.	Flush out and refill with correct lubricant as recommended.
Runs Noisy	Loose Foundation Bolts	Weak mounting structure.	Inspect mounting of reducer. Tighten loose bolts and/or reinforce mounting and structure.
		Loose hold down bolts.	Tighten bolts.
	Worn Disc	Overloading unit may result in damage to disc.	Disassemble and replace disc. Recheck rated capacity of reducer.
	Failure of Bearings	May be due to lack of lubricant.	Replace bearing. Clean and flush reducer and fill with recommended lubricant.
		Overload.	Check rated capacity of reducer, replace with unit of sufficient capacity or reduce load.
	Insufficient Lubricant	Level of lubricant in the reducer not properly maintained.	Check lubricant level and adjust to factory-recommended level.
	Damaged Pins & Rollers	Overloading of reducer.	Disassemble and replace ring gear pins and rollers. Check load on reducer.
Output Shaft Does Not Turn	Input Shaft Broken	Overloading of reducer can cause damage.	Replace broken shaft. Check rated capacity of reducer.
		Key missing or sheared off on input shaft.	Replace key.
	Eccentric Bearing Broken	Lack of lubricant.	Replace eccentric bearing. Flush and refill with recommended lubricant.
		Coupling loose or disconnected.	Properly align reducer and coupling. Tighten coupling.
Oil Leakage	Worn Seals	Caused by dirt or grit entering seal.	Replace seals. Breather filter may be clogged. Replace or clean filter.
		Overfilled reducer.	Check lubricant level and adjust to recommended level.
		Vent clogged.	Clean or replace element, being sure to prevent any dirt from falling into the reducer.
		Improper mounting position, such as wall or ceiling mount of horizontal reducer.	Mount horizontally or rework reducer to wall or ceiling mount.

10

Franklin Miller, Inc.

S25060 Grinder Controller for Submersible-Explosion-proof Motor

Specification number: **S25060-SUBEXP-SPEC.02.wpd**

Controller: The controller shall completely sequence the operation of the equipment covered by the job specification.

Enclosure type: The enclosure shall be NEMA 4X fiberglass. A provision shall be made within the enclosure for connection of a grounding cable.

The controller shall contain the following features.

1. Disconnect: Terminal blocks only shall be provided for the primary feeder cables entering the controller enclosure

A disconnect means with lockout provisions must be provided adjacent to the controller **by others.**

2. Motor starter: A reversing starter shall be provided for the motor indicated in the job specifications. The size of the starter shall be based on IEC requirements for the motor horsepower.

A motor overload relay shall be furnished as part of the starting equipment. Tripping of the relay shall stop the motor and flash the trip light. Resetting the relay shall allow the motor to restart.

Output terminals shall be provided for connection of the motor leads exiting the enclosure.

3. Control circuit: The following provisions apply.

Voltage: Nominally 120V with other levels determined by the requirements of the PLC and other control items supplied as part of the controller.
If DC voltage is required, an adequately sized source of DC power must be provided within the controller.
Transformer: Ungrounded primary and secondary side leads shall be fuse protected. The control transformer shall be sized to carry the control-circuit

load plus a minimum of 20% spare capacity for future load growth.
PLC: A vendor standard programmable logic controller shall be provided within the controller.

4. Operator control: A three-position "HAND-OFF/RESET-AUTO" selector switch shall be provided in the front cover. Its function is as follows:
Hand: When in this position, the motor starter is energized and the motor runs under the control of the PLC as described in "Operation."
Off-Reset: When in this position, the motor shall be prevented from starting in both the forward and reverse direction; the signal from the remote-start dry contact shall be disabled; and if established, the Alarm Condition circuitry is reset.
Auto: In this position, when a remote Run signal is received, the motor shall cycle under the control of the PLC. The cycle shall be terminated if the run signal is interrupted, or the selector switch is placed in the Off/Reset position, or if the equipment experiences an Alarm Condition shutdown.

5. Indicating lights: The following LED indicators shall be provided. .

A white "POWER ON" indicating light shall be illuminated when power is available in the control circuit.

A green "RUN" indicating light shall be illuminated when the selector switch is in the Hand or Auto position with the equipment motor running in the forward or reverse direction; and during motor reversal pauses.

A red "TRIP" indicating light shall be illuminated steadily when the selector switch is in the Hand or Auto position and the equipment has experienced an Alarm Condition stoppage.

The red "TRIP" indicating light shall flash when the motor overload relay trips.

The red "TRIP" indicating light shall "double flash" when the motor winding temperature causes the embedded thermostats to open (standard feature for explosion-proof motor).

A red "SEAL FAIL" indicating light shall be illuminated when excessive moisture is detected in the submersible motor.

6. Remote I/Os:

The following inputs and outputs shall be supplied. Wiring shall be complete from the PLC to terminal blocks.

Run status. A normally open dry-contact output shall close when the equipment motor is running (and during motor reversal pauses). It shall open when the equipment is stopped, trips on an Alarm Condition, or power to the controller is disconnected.

Trip status. A normally open dry-contact output shall close when the equipment experiences an Alarm Condition stoppage. It shall open when the Alarm Condition lockout circuit has been reset.
The contact shall also close and remain closed (no pulsing) when the motor overload relay trips. It shall open when the relay is reset.

Remote E-stop. Provision shall be made for a maintained-contact pushbutton (**by others**) that shall disconnect control voltage within the enclosure. These terminals shall be jumpered (to be removed if an E-stop is installed).

Remote start. Provision shall be made to accept a remote contact closure input (**by others**) that starts the cycle when the selector switch is in the Auto position.

7. Instrumentation:

The following items shall be included as part of the controls of the subject equipment. (Also see Option 2 on page 6).

Current sensor. One phase shall be monitored for a high current condition with a current sensor and current relay. If the phase current reaches an adjustable set point (factory set at approximately 80% of locked-rotor current), the motor starter shall be de-energized and after a two-second delay (adjustable), an "Auto-Clear" sequence as described below shall be initiated.

Only during initial starting, the current sensor C/S signal to the PLC shall be blocked by a time-delay relay (adjustable) during the motor inrush current period.

Moisture detection. A moisture relay shall be provided within the enclosure. When the probe in the motor detects excessive moisture, the grinder motor is de-energized, the Seal Fail light is illuminated, and an Alarm Condition lockout circuit is established.

Terminals shall be provided for sensor leads.

Motor winding temperature. When thermostats in the motor windings open, indicating the winding temperature is excessively high, the grinder motor is de-energized, the Overtemp pilot light is illuminated, and an Alarm Condition lockout circuit established.

Terminals shall be provided for thermostat leads.

8. Operation

The mode of operation may be selected as either S250 (reversing grinder that will normally operate in either direction), or S260 (momentary reversing grinder that will normally operate in only one direction).

S250

After placing the selector switch in the Hand position, or after receiving a remote Run signal if in the Auto position, the grinder shall operate in the starting direction of rotation.

If the equipment runs for more than two hours without experiencing an alarm condition, the motor starter shall be de-energized. After a two second delay (adjustable) to allow the equipment to coast to a stop, the grinder shall restart and run in the opposite direction of rotation.

The automatic reversals shall continue until the cycle is stopped by interrupting the remote-run signal,

or by moving the selector switch to the Off/Reset position, or if a Jam occurs. This periodic rotation direction change aids in cleaning the equipment.

Auto-clear cycle: If the phase current reaches an adjustable set point (factory set) at any time within the 2-hr cycle the motor starter shall be de-energized. After a two second delay (adjustable), the grinder shall automatically restart in the opposite direction of rotation in an attempt to clear the Jam. This direction reversal sequence shall be repeated a total of four times.

If at any time during these four reversals the equipment runs for more than 30 seconds continuously after starting one of the reversals, the reversal counter shall be reset.

Alarm Condition: If after four tries, however, the Jam condition still exists, the forward starter coil shall be deenergized, and after a 2-second delay, the reverse coil shall be energized for 1-sec and then deenergized. The automatic cycle is then ended , and an Alarm Condition lockout circuit shall be established and remain in the alarm state (***even if power is lost***) until it is reset.

The circuit shall cause the Trip pilot light to be illuminated, the Trip Status contact to close, the Running pilot light to be extinguished, and the Run Status contact to open.

Once the obstruction has been manually cleared, the Alarm Condition lockout circuit can be reset by moving the selector switch to the Off/Reset position.

S260

Placing the selector switch in the Hand position, or after receiving a remote Run signal if in the Auto position, the "reverse" motor starter shall be energized and the grinder rotates in that direction for two seconds (adjustable) before the reverse starter coil is de-energized. After a delay of two seconds (adjustable) to allow the equipment to coast to a stop, the grinder shall run continuously in the "forward" direction of rotation. It shall continue to run in this direction until the motor starter is de-energized by interrupting the remote-run signal, or by turning the

selector switch to the Off/Reset position, or if the equipment experiences a Jam condition.

Auto-clean cycle. If the phase current reaches an adjustable set point (factory set) while running, the motor starter shall be de-energized. After a delay of two seconds to allow the equipment to coast to a stop, the sequence described above for a normal S260 starting cycle shall be initiated in an attempt to clear the Jam condition..

This automatic auto-clean cycle shall repeat a total of four times.

If at any time the equipment runs for more than 30 seconds continuously in the forward direction after starting one of the reversals, the reversal counter shall be reset.

Alarm Condition: If after four attempts, however, the Jam condition still exists, the forward starter coil shall be deenergized, and after a 2-sec delay, the reverse coil energized for 1-sec and then deenergized. The automatic cycle is then ended, and an Alarm Condition lockout circuit established and remain in the alarm state (***even if power is lost***) until it is reset.

The circuit shall cause the Trip pilot light to be illuminated, the Trip Status contact to close, the Running pilot light to be extinguished, and the Run Status contact to open.

Once the obstruction has been manually cleared, the Alarm Condition lockout circuit can be reset by moving the selector switch to the Off/Reset position.

NOTE: Before manually clearing an obstruction, the disconnect switch ahead of the controller ***must*** be opened and locked out.

9. OPTIONS: As an added cost alternative, a disconnect means can be provided as part of the controller.

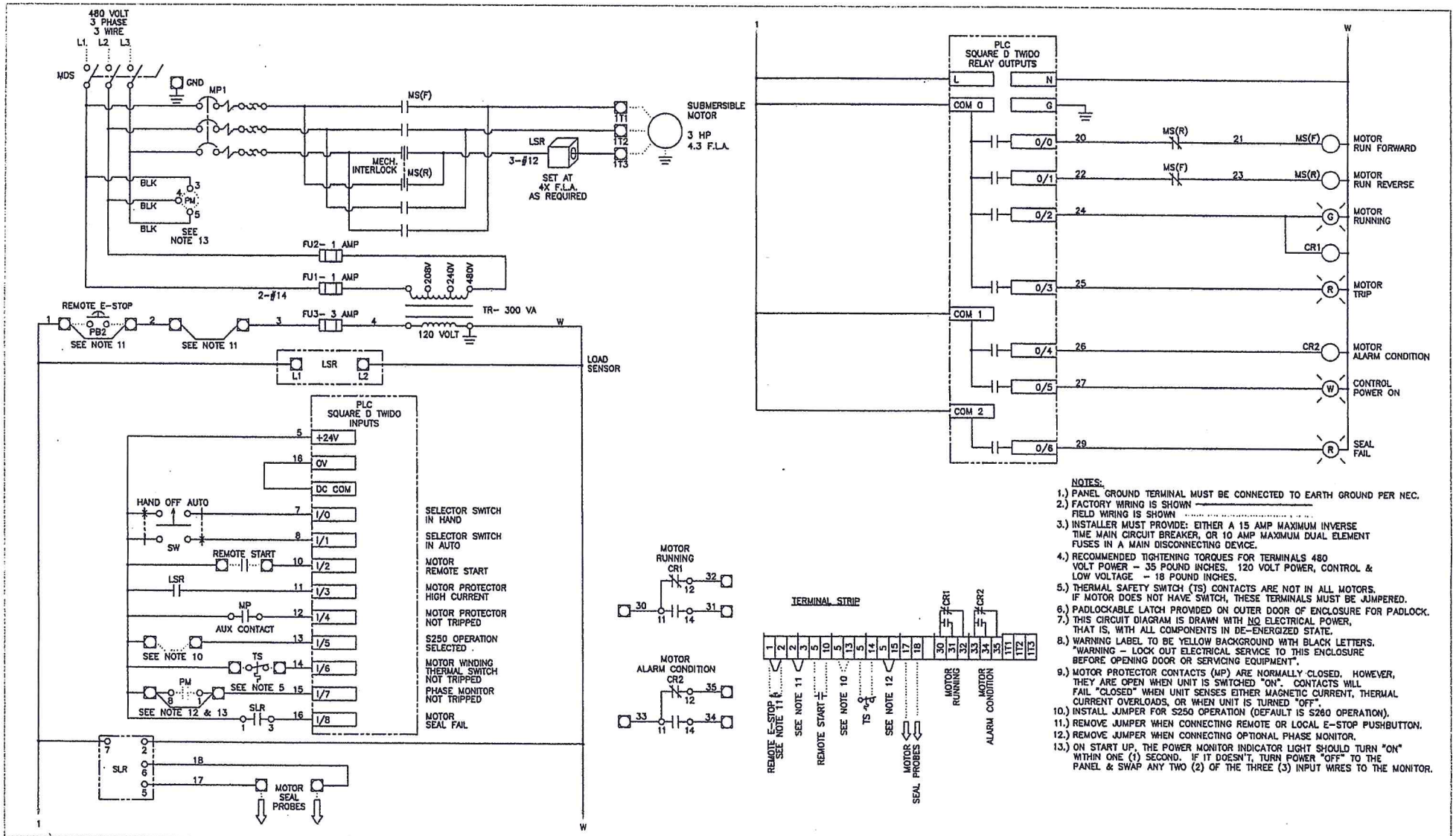

NOTES:

1.) PANEL GROUND TERMINAL MUST BE CONNECTED TO EARTH GROUND PER NEC.
2.) FACTORY WIRING IS SHOWN ———— FIELD WIRING IS SHOWN .....
3.) INSTALLER MUST PROVIDE: EITHER A 15 AMP MAXIMUM INVERSE TIME MAIN CIRCUIT BREAKER, OR 10 AMP MAXIMUM DUAL ELEMENT FUSES IN A MAIN DISCONNECTING DEVICE.
4.) RECOMMENDED TIGHTENING TORQUES FOR TERMINALS 480 VOLT POWER – 35 POUND INCHES. 120 VOLT POWER, CONTROL & LOW VOLTAGE – 18 POUND INCHES.
5.) THERMAL SAFETY SWITCH (TS) CONTACTS ARE NOT IN ALL MOTORS. IF MOTOR DOES NOT HAVE SWITCH, THESE TERMINALS MUST BE JUMPERED.
6.) PADLOCKABLE LATCH PROVIDED ON OUTER DOOR OF ENCLOSURE FOR PADLOCK.
7.) THIS CIRCUIT DIAGRAM IS DRAWN WITH NO ELECTRICAL POWER, THAT IS, WITH ALL COMPONENTS IN DE-ENERGIZED STATE.
8.) WARNING LABEL TO BE YELLOW BACKGROUND WITH BLACK LETTERS. "WARNING – LOCK OUT ELECTRICAL SERVICE TO THIS ENCLOSURE BEFORE OPENING DOOR OR SERVICING EQUIPMENT".
9.) MOTOR PROTECTOR CONTACTS (MP) ARE NORMALLY CLOSED. HOWEVER, THEY ARE OPEN WHEN UNIT IS SWITCHED "ON". CONTACTS WILL FAIL "CLOSED" WHEN UNIT SENSES EITHER MAGNETIC CURRENT, THERMAL CURRENT OVERLOADS, OR WHEN UNIT IS TURNED "OFF".
10.) INSTALL JUMPER FOR S250 OPERATION (DEFAULT IS S260 OPERATION).
11.) REMOVE JUMPER WHEN CONNECTING REMOTE OR LOCAL E-STOP PUSHBUTTON.
12.) REMOVE JUMPER WHEN CONNECTING OPTIONAL PHASE MONITOR.
13.) ON START UP, THE POWER MONITOR INDICATOR LIGHT SHOULD TURN "ON" WITHIN ONE (1) SECOND. IF IT DOESN'T, TURN POWER "OFF" TO THE PANEL & SWAP ANY TWO (2) OF THE THREE (3) INPUT WIRES TO THE MONITOR.

Motor Requirements: 3 HP, 4.3 F.L.A. each

THIS COMPLETE ELECTRICAL ASSEMBLY WILL BE CONSTRUCTED AND LABELLED TO CONFORM TO UNDERWRITERS LABORATORIES (U.L.508A) PROCEDURES.

WIRE TYPE	SIZE	COLOR	WIRE TYPE	SIZE	COLOR
POWER	SEE ABOVE	BLACK	24 VDC	16 AWG	PURPLE
120V CONTROL	16 AWG	RED	12 VDC	16 AWG	BLUE
120V NEUTRAL	16 AWG	WHITE	INTERLOCK	16 AWG	YELLOW
24 VAC	16 AWG	ORANGE	SHIELDED	18 AWG	MULTI
LOW VAC	16 AWG	BROWN	GROUND	14 AWG	GREEN

AS-BUILT

Sheet:	Orig. Date:	Rev. Date:	As-Built Date:
1 OF 2	1-14-14		1-15-14

Control Works, inc.
400 Techne Center Dr, Suite 104
Milford, Ohio 45150
513-831-9959
www.controlworksinc.com

EC00750 – S250/S260 STANDARD CONTROLLER W/PM,DS
SIMPLEX PUMP CONTROL PANEL

Panel Power Requirements: SCCR: 5 kA RMS Sym. 480 V. Max.
480 V 3 Ph 60 Hz 5.3 A 3 HP

Drawn By:	Designed By:	Checked By:	As Built By:	Checked By:
B.HOFFMAN	B.L.H.		T.S.B.	MLB

Customer: FRANKLIN MILLER, INC.
Job Number: ————
Drawing Number: 1039185