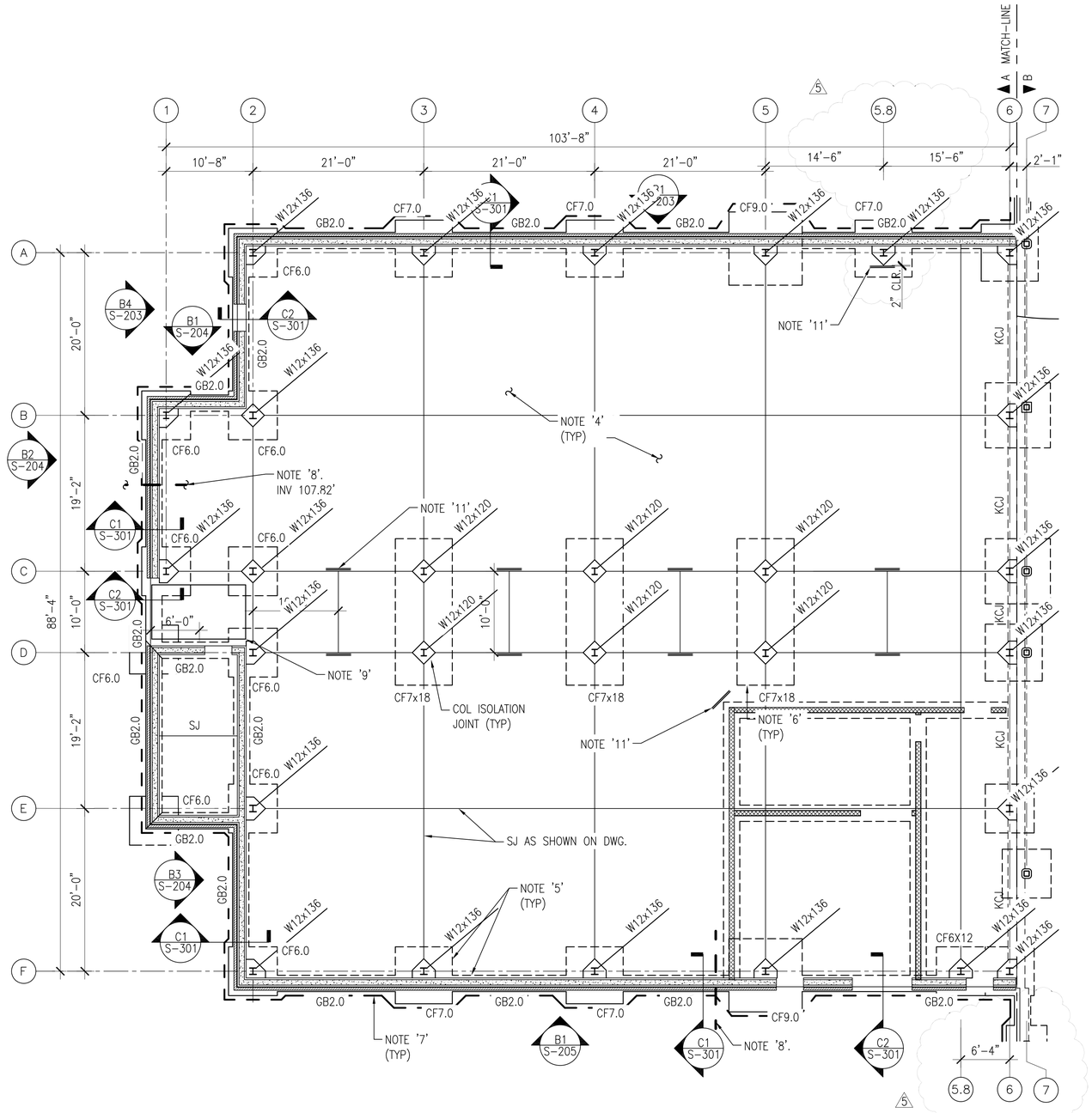

FOUNDATION & SLAB PLAN - FIRST FLOOR - AREA A

SCALE: 1/8" = 1'-0"

GENERAL SHEET NOTES

1. TOP OF FOOTING ELEVATION IS –2'–0", UNLESS OTHERWISE NOTED (–X'–X") ON PLAN. ACTUAL FINISH FIRST FLOOR ELEVATION IS (111.0 FT.) SEE CIVIL DRAWINGS.
2. UNLESS OTHERWISE NOTED, THE CENTERLINES OF COLUMN FOOTINGS SHALL BE LOCATED ON COLUMN CENTERLINES. AT COLUMN GRIDS 3 THROUGH 5, WHERE TWO COLUMNS BEAR ON THE SAME FOOTING, THE FOOTING CENTERLINE SHALL BE LOCATED MIDWAY BETWEEN THE TWO COLUMN CENTERLINES. 5 ALONG GRID LINE F FOOTING BELOW GRID LINES 5.8 AND 6 SHALL BE LOCATED MIDWAY BETWEEN THE TWO COLUMN CENTER LINES.
3. REFERENCE TOP OF SLAB–ON–GRADE ELEVATION IS 0'–0". DEVIATIONS FROM THE REFERENCE TOP OF SLAB–ON–GRADE ELEVATION ARE NOTED THUSLY [–X"] ON PLAN.
4. TOP OF SLAB REFERENCE ELEVATION IS +0'–0", ACTUAL ELEVATION IS 113' SEE CIVIL. SLAB–ON–GRADE SHALL BE 5" THICK, REINFORCED WITH 6X6–W2.0XW2.0 W.W.F. OVER A 10 MIL VAPOR BARRIER AND A CONTINUOUS LAYER OF 6" CAPILARY WATER BARRIER.
5. REFER TO SHEET S–501 FOR FOOTING SCHEDULE AND DETAILS. WALL FOOTINGS AND PERIMETER COLUMN FOOTINGS SHALL BE FORMED WITH RIGID VERTICAL FORMS.
6. INTERIOR FOOTINGS MAY BE EARTH–FORMED.
7. CONTINUOUS 1"x12" STRIP DRAIN. COORDINATE WITH CIVIL DRAWINGS.
8. OUTLET CONNECTION & PIPING – SEE CIVIL & PLUMBING DRAWINGS. ALL PIPING SHALL PASS BELOW CONCRETE GRADE BEAMS AS REQUIRED TO TIES INTO NEW PIPING RUNS AT BUILDING EXTERIOR.
9. DEPRESSED SLAB – SEE SHEET S–502 FOR DETAIL. COORDINATE WITH ARCHITECTURAL DRAWINGS FOR DEPTH AND EXTENTS.
10. REFER TO SHEET S–001 FOR GENERAL NOTES LEGEND AND ABBREVIATIONS.
11. 2–#4 X 4' LONG REINFORCING BARS AT MID DEPTH OF SLAB. TYPICAL WHERE SHOWN.

KEY PLAN

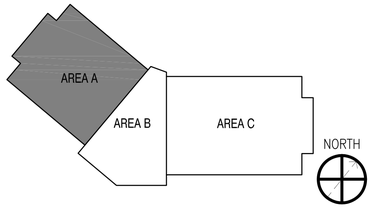

GRAPHIC SCALE

1/8"=1'–0" 0' 5' 10' 20' 30'

SYM	DESCRIPTION	DATE	APPR
5	AMENDMENT 005	03.08.16	BSS
2	AMENDMENT 002	02.17.16	BSS

NAVFAC

SEAL

A/E INFO

APPROVED: David W. Dunnfield
FOR COMMANDER NAVFAC

ACTIVITY: MICHELLE YARMER

SATISFACTORY TO DATE 10/23/15

DES BPF DRW BPF CHK WCT

<<PM/DM>> BHD/CAH

BRANCH MANAGER Bonetti

CHIEF ENG/ARCH DWG

FIRE PROTECTION

DEPARTMENT OF THE NAVY
NAVAL FACILITIES ENGINEERING COMMAND
NORTHEAST IPT
NAVAL FACILITIES ENGINEERING COMMAND ~ MIDLANT
NAVAL STATION NORFOLK, VA
NAVAL SUPPORT ACTIVITY
PHILADELPHIA, PA

P-1501 DLA TROOP SUPPORT HQ FACILITY

FOUNDATION & SLAB PLAN – FIRST FLOOR – AREA A

SCALE: AS NOTED

EPROJECT NO.: 1308282

CONSTR. CONTR. NO. N40085–16–R–3000

NAVFAC DRAWING NO. 12707174

SHEET 160 OF 613

S101A

DRAWFORM REVISION: 10 MARCH 2009

FILE NAME: P:\PA\NSA\WLCON\2015_1308282_P1501_DLA Troop Support HQ Facility\B_Design\Drawings\Sheet Files\07_Structural\BLDG-P1501-1308282-S-101A.dwg LAYOUT NAME: S101A PLOTTED: Tuesday, March 08, 2016 - 10:27am USER: william.c.thornton

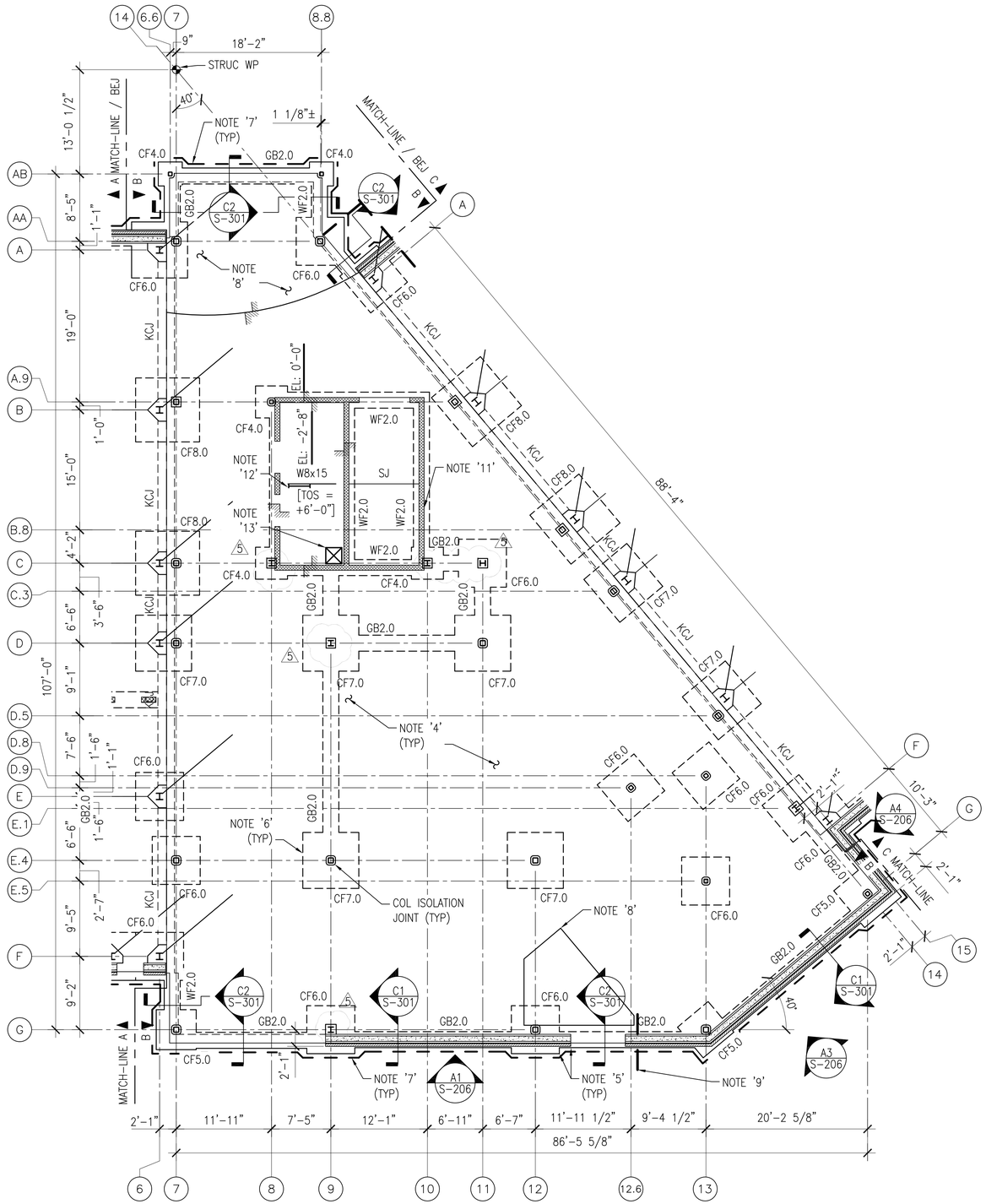

FOUNDATION & SLAB PLAN - FIRST FLOOR - AREA B

SCALE: 1/8" = 1'-0"

GENERAL SHEET NOTES

1. TOP OF FOOTING ELEVATION IS −2'−0", UNLESS OTHERWISE NOTED THUSLY (−X'−X") ON PLAN. ACTUAL FINISH FLOOR ELEVATION IS (111.0 FT.) SEE CIVIL DRAWINGS.
2. UNLESS OTHERWISE NOTED, THE CENTERLINES OF COLUMN FOOTINGS SHALL BE LOCATED ON COLUMN CENTERLINES. ALONG COLUMN GRIDS 6/7 & 14/15, WHERE TWO COLUMNS BEAR ON THE SAME FOOTING, THE FOOTING CENTERLINE SHALL BE LOCATED ON THE CENTERLINES OF THE LARGER OF THE TWO COLUMNS.
3. REFERENCE TOP OF SLAB−ON−GRADE ELEVATION IS 0'−0". DEVIATIONS FROM THE REFERENCE TOP OF SLAB−ON−GRADE ELEVATION ARE NOTED THUSLY [−X"] ON PLAN.
4. TOP OF SLAB REFERENCE ELEVATION IS +0'−0", ACTUAL ELEVATION IS 113' SEE CIVIL. SLAB−ON−GRADE SHALL BE 6" THICK, REINFORCED WITH #4 @ 6" O/C EACH WAY OVER A 15 MIL VAPOR BARRIER AND A CONTINUOUS LAYER OF 4" #57 CRUSHED STONE. TOP LAYER OF REINFORCEMENT SHALL BE 1 1/2" CLEAR FROM TOP OF SLAB. BOTTOM LAYER SHALL BE SECURED TIGHT TO TOP LAYER.
5. REFER TO SHEET S−501 OR FOUNDATION SCHEDULE AND DETAILS. WALL FOOTINGS AND PERIMETER COLUMN FOOTINGS SHALL BE FORMED WITH RIGID VERTICAL FORMS.
6. INTERIOR FOOTINGS MAY BE EARTH−FORMED.
7. CONTINUOUS 1"x12" STRIP DRAIN.
8. DEPRESSED SLAB SEE TYPICAL DETAIL ON S−502 . COORDINATE WITH ARCHITECTURAL FOR EXACT DEPTH & EXTENTS.
9. OUTLET CONNECTION & PIPING − SEE CIVIL & PLUMBING DRAWINGS. ALL PIPING SHALL PASS BELOW CONCRETE GRADE BEAMS AS REQUIRED TO TIES INTO NEW PIPING RUNS AT BUILDING EXTERIOR.
10. SLAB SHALL BE POURED MONOLITHICALLY IF POSSIBLE. IF COLD JOINTS ARE REQUIRED, THEY SHALL ONLY BE ALLOWED AT FLOOR PATTERN LINES AS SHOWN ON I401. COORDINATE WITH INTERIOR DRAWINGS TO INSURE ANY JOINTS ARE COMPATIBLE WITH FLOOR COLOR PATTERN.
11. 8" CMU WALL WITH #5 BARS AT 24" O/C (GROUTED SOLID). PROVIDE 8" BOND BEAM WITH 92) 35 CONT. AT EACH FLOOR LEVEL.
12. METAL LADDER, SEE ARCHITECTURAL DRAWINGS.
13. SUMP PIT, SEE DETAIL ON S−501
14. FOR COLUMN DESIGN NOTATION REFER TO COLUMN SCHEDULE ON S−601.

KEY PLAN

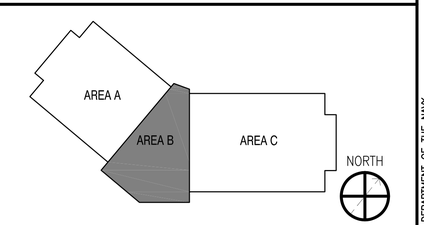

GRAPHIC SCALE

1/8"=1'−0" 0' 5' 10' 20' 30'

SYM	DESCRIPTION	DATE	APPR
5	AMENDMENT 005	03.08.16	BSS
2	AMENDMENT 002	02.17.16	BSS

NAVFAC

SEAL

A/E INFO

APPROVED: David W. Brumfield
FOR COMMANDER NAVFAC

ACTIVITY: MICHELLE YARMER
SATISFACTORY TO DATE 10/23/15
DES BPF DRW BPF CHK WCT
<<PM/DM>> BHD/CAH
BRANCH MANAGER Bonetti
CHIEF ENG/ARCH DWG
FIRE PROTECTION

DEPARTMENT OF THE NAVY
NAVAL FACILITIES ENGINEERING COMMAND
NORTHEAST IPT
NAVAL FACILITIES ENGINEERING COMMAND ~ MIDLANT
NAVAL STATION NORFOLK, VA
NAVAL SUPPORT ACTIVITY
PHILADELPHIA, PA

P-1501 DLA TROOP SUPPORT HQ FACILITY

FOUNDATION & SLAB PLAN – FIRST FLOOR – AREA B

SCALE: AS NOTED
EPROJECT NO.: 1308282
CONSTR. CONTR. NO. N40085-16-R-3000
NAVFAC DRAWING NO. 12707175
SHEET 161 OF 613

S101B

DRAWFORM REVISION: 10 MARCH 2009

FILE NAME: P:\PA\NSA\MILCON\2015_1308282_P1501_DLA Troop Support HQ Facility\B_Design\Drawings\Sheet Files\07_Structural\BLDG-P1501-1308282-S-1018.dwg LAYOUT NAME: S101B PLOTTED: Tuesday, March 08, 2016 - 1:37pm USER: william.c.thornton

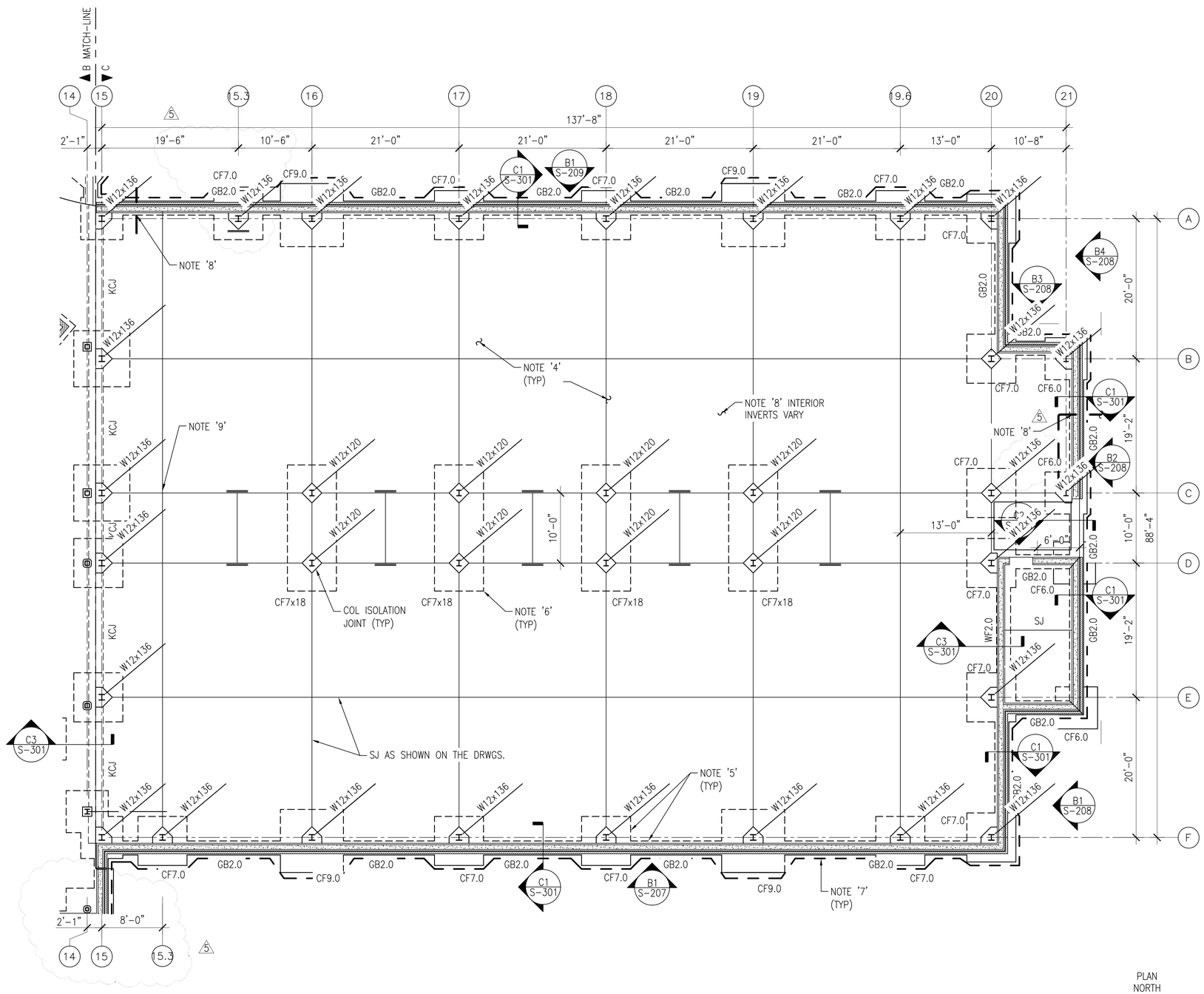

FOUNDATION & SLAB PLAN - FIRST FLOOR - AREA C

SCALE: 1/8" = 1'-0"

GENERAL SHEET NOTES

1. TOP OF FOOTING ELEVATION IS −2'−0", UNLESS OTHERWISE NOTED THUSLY (−X'−X") ON PLAN. ACTUAL FIRST FINISH FLOOR ELEVATION IS (111.0 FT.) SEE CIVIL DRAWINGS.
2. UNLESS OTHERWISE NOTED, THE CENTERLINES OF COLUMN FOOTINGS SHALL BE LOCATED ON COLUMN CENTERLINES. AT COLUMN GRIDS 16−19, WHERE TWO COLUMNS BEAR ON THE SAME FOOTING, THE FOOTING CENTERLINE SHALL BE LOCATED MIDWAY BETWEEN THE TWO COLUMN CENTERLINES.
3. REFERENCE TOP OF SLAB−ON−GRADE ELEVATION IS 0'−0". DEVIATIONS FROM THE REFERENCE TOP OF SLAB−ON−GRADE ELEVATION ARE NOTED THUSLY −X" ON PLAN.
4. TOP OF SLAB REFERENCE ELEVATION IS +0'−0", ACTUAL ELEVATION IS 113' SEE CIVIL. SLAB−ON−GRADE SHALL BE 5" THICK, REINFORCED WITH 6X6−W2.0XW2.0 W.W.F. OVER A 15 MIL VAPOR BARRIER AND A CONTINUOUS 4" LAYER OF #57 CRUSHED STONE.
5. WALL FOOTINGS AND PERIMETER COLUMN FOOTINGS SHALL BE FORMED WITH RIGID VERTICAL FORMS.
6. INTERIOR FOOTINGS MAY BE EARTH−FORMED.
7. CONTINUOUS 1"x12" STRIP DRAIN.
8. OUTLET CONNECTION & PIPING − SEE CIVIL & PLUMBING DRAWINGS. ALL PIPING SHALL PASS BELOW CONCRETE GRADE BEAMS AS REQUIRED TO TIES INTO NEW PIPING RUNS AT BUILDING EXTERIOR.
9. 2−#4X4'−0" LONG REINFORCING BARS AT MID−DEPTH OF SLAB. TYPICAL AT ALL LOCATIONS SHOWN.

KEY PLAN

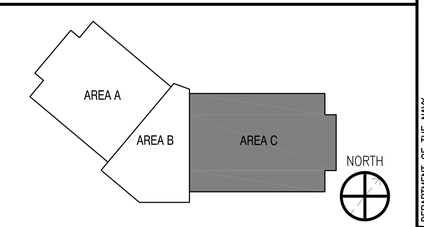

GRAPHIC SCALE

1/8"=1'−0" 0' 5' 10' 20' 30'

SYM	DESCRIPTION	DATE	APPR
5	AMENDMENT 005	03.08.16	BSS
2	AMENDMENT 002	02.17.16	BSS

NAVFAC

SEAL

A/E INFO

APPROVED: David W. Dunnfield
FOR COMMANDER NAVFAC

ACTIVITY: MICHELLE YARMER

SATISFACTORY TO DATE 10/23/15

DES BPF DRW BPF CHK JMS

<<PM/DM>> BHD/CAH

BRANCH MANAGER Bonetta

CHIEF ENG/ARCH DWG

FIRE PROTECTION

DEPARTMENT OF THE NAVY
NAVAL FACILITIES ENGINEERING COMMAND
NORTHEAST IPT
NAVAL FACILITIES ENGINEERING COMMAND ~ MIDLANT
NAVAL SUPPORT ACTIVITY
NAVAL STATION NORFOLK, VA
PHILADELPHIA, PA

P-1501 DLA TROOP SUPPORT HQ FACILITY

FOUNDATION & SLAB PLAN − FIRST FLOOR − AREA C

SCALE: AS NOTED

EPROJECT NO.: 1308282

CONSTR. CONTR. NO. N40085−16−R−3000

NAVFAC DRAWING NO. 12707176

SHEET 162 OF 613

S101C

DRAWFORM REVISION: 10 MARCH 2009

FILE NAME: P:\PAVNSA\MILCON\2015_1308282_P1501_DLA Troop Support HQ Facility\B_Design\Drawings\Sheet Files\07_Structural\BLDG-P1501-1308282-S-101C.dwg LAYOUT NAME: S101C PLOTTED: Tuesday, March 08, 2016 - 10:54am USER: william.c.thornton

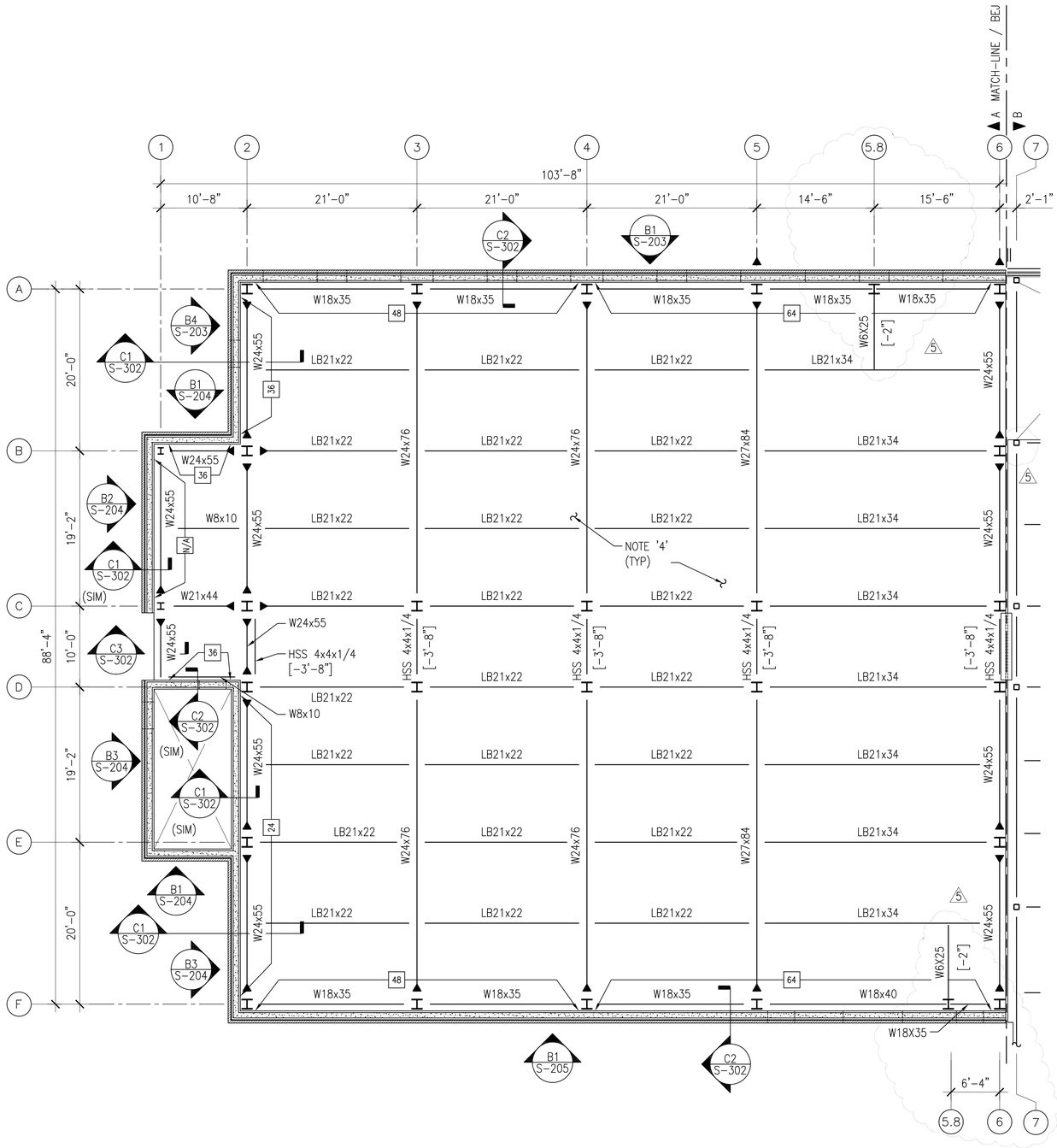

FRAMING PLAN - SECOND FLOOR - AREA A

SCALE: 1/8" = 1'-0"

GENERAL SHEET NOTES

1. REFERENCE TOP OF STEEL ELEVATION = +13'-0". DEVIATIONS FROM THE REFERENCE TOP OF STEEL ELEVATION ARE NOTED THUS [+/-X"] ON PLAN.
2. SECOND FLOOR ELEVATION = +13'-4".
3. BEAMS GRAPHICALLY DEPICTED ON GRIDS SHALL BE CENTERED ON THOSE GRIDS. BEAMS BETWEEN GRIDS SHALL BE EVENLY SPACED, NOT TO EXCEED 10'-8" ON CENTER, UNLESS OTHERWISE NOTED.
4. ELEVATED SLAB SHALL BE 4 INCH TOTAL THICKNESS SLAB ON 2"x18GA COMPOSITE STEEL DECK, CONTINUOUSLY REINFORCED WITH 6x6 W2.0xW2.0 WELDED WIRE FABRIC, LOCATED 1" CLEAR FROM TOP OF SLAB. DECK SPANS IN THE NORTH-SOUTH DIRECTION, UNLESS OTHERWISE NOTED.
5. PROVIDE MINIMUM NUMBER OF SLAB CONSTRUCTION JOINTS AS PRACTICAL I.A.W. A.C.I. 318. REFER TO ELEVATED SLAB CONSTRUCTION JOINT DETAIL ON S-503.
6. REFER TO SHEET S-001 FOR PLAN LEGEND, GENERAL NOTES AND ABBREVIATIONS.
7. PROVIDE BRIDGING FOR CASTELLATED BEAMS I.A.W. MANUFACTURER'S INSTRUCTIONS.
8. LB##X## ARE CASTELLATED BEAMS. PROVIDE SHOP DRAWINGS AND CALCULATIONS TO THE CONTRACTING OFFICER FOR REVIEW PRIOR TO FABRICATION.
9. PROVIDE SUPPLEMENTAL FRAMING AS REQUIRED BELOW HIGH DENSITY FILING SYSTEM. PROVIDE SHOP DRAWINGS AND CALCULATIONS TO THE CONTRACTING OFFICER FOR REVIEW BEFORE FABRICATION.

KEY PLAN

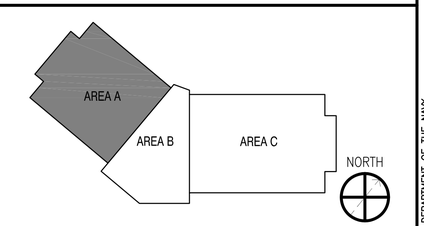

GRAPHIC SCALE

1/8"=1'-0" 0' 5' 10' 20' 30'

SYM	DESCRIPTION	DATE	APPR
5	AMENDMENT 005	03.08.16	BSS

NAVFAC

SEAL

A/E INFO

APPROVED
David W. Greenfield
FOR COMMANDER NAVFAC

ACTIVITY
MICHELLE YARMER

SATISFACTORY TO DATE 10/23/15
DES BPF DRW BPF CHK WCT
<<PM/DM>> BHD/CAH
BRANCH MANAGER
CHIEF ENG/ARCH DWG
FIRE PROTECTION

DEPARTMENT OF THE NAVY
NAVAL FACILITIES ENGINEERING COMMAND
NAVAL FACILITIES ENGINEERING COMMAND ~ MIDLANT
NAVAL STATION NORFOLK, VA
NORTHEAST IPT
NAVAL SUPPORT ACTIVITY
PHILADELPHIA, PA

P-1501 DLA TROOP SUPPORT HQ FACILITY

FRAMING PLAN – SECOND FLOOR – AREA A

SCALE: AS NOTED
EPROJECT NO. 1308282
CONSTR. CONTR. NO. N40085-16-R-3000
NAVFAC DRAWING NO. 12707177
SHEET 163 OF 613

S102A

DRAWFORM REVISION: 10 MARCH 2009

FILE NAME: P:\PA\NSA\MILCON\2015_1308282_P1501_DLA Troop Support HQ Facility\B_Design\Drawings\Sheet Files\07_Structural\BLDG-P1501-1308282-S-102A.dwg LAYOUT NAME: S102A PLOTTED: Tuesday, March 08, 2016 - 10:30am USER: william.c.thornton

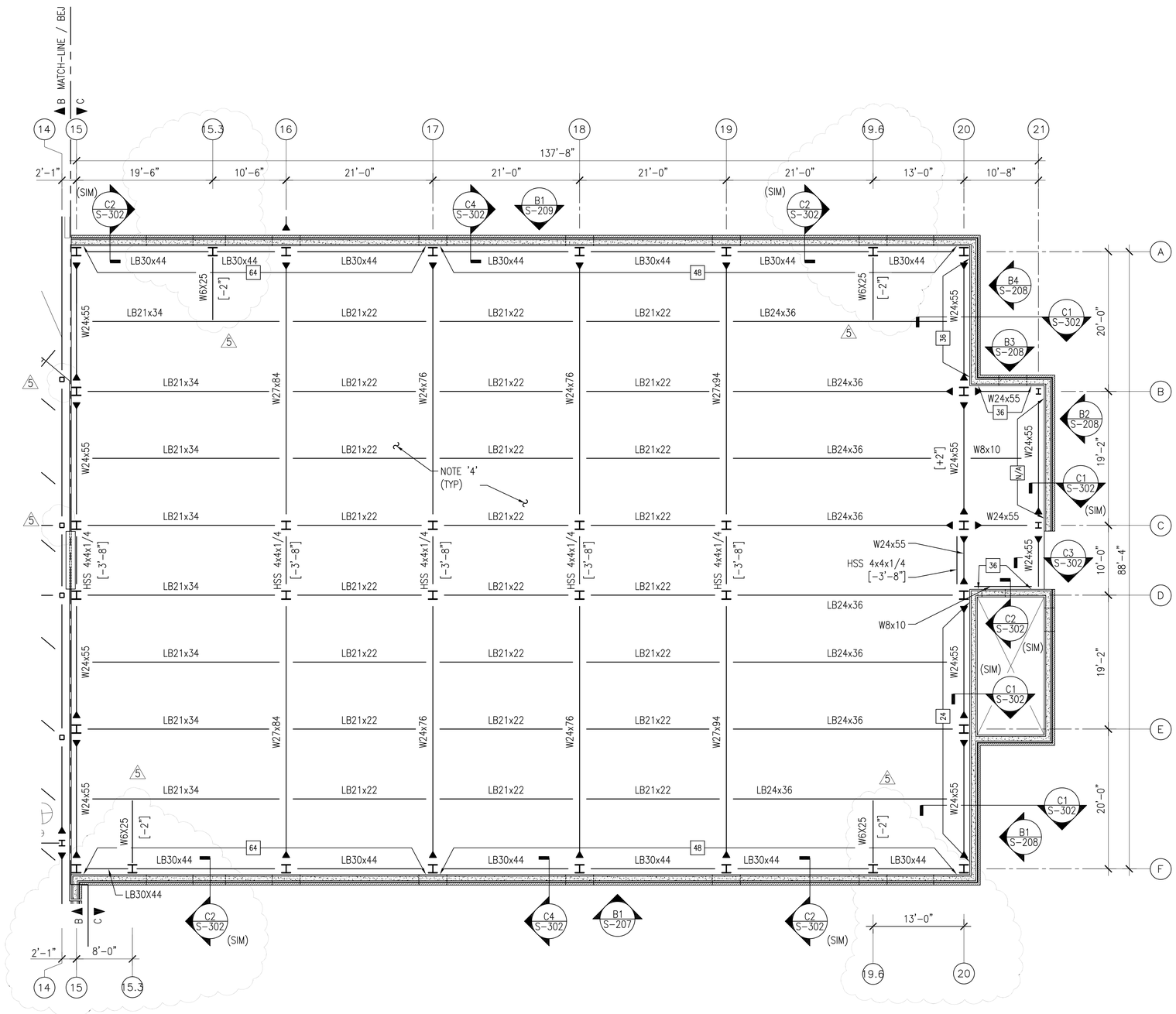

FRAMING PLAN - SECOND FLOOR - AREA C

SCALE: 1/8" = 1'-0"

GENERAL SHEET NOTES

1. REFERENCE TOP OF STEEL ELEVATION = +13'-0". DEVIATIONS FROM THE REFERENCE TOP OF STEEL ELEVATION ARE NOTED THUS [+X"] ON PLAN.
2. SECOND FLOOR ELEVATION = +13'-4".
3. BEAMS GRAPHICALLY DEPICTED ON GRIDS SHALL BE CENTERED ON THOSE GRIDS. BEAMS BETWEEN GRIDS SHALL BE EVENLY SPACED, NOT TO EXCEED 10'-8" ON CENTER, UNLESS OTHERWISE NOTED.
4. ELEVATED SLAB SHALL BE 4 INCH TOTAL THICKNESS SLAB ON 2"x18GA COMPOSITE STEEL DECK, CONTINUOUSLY REINFORCED WITH 6x6 W2.0xW2.0 WELDED WIRE FABRIC, LOCATED 1" CLEAR FROM TOP OF SLAB. DECK SPANS IN THE NORTH-SOUTH DIRECTION, UNLESS OTHERWISE NOTED.
5. PROVIDE MINIMUM NUMBER OF SLAB CONSTRUCTION JOINTS AS PRACTICAL I.A.W. A.C.I. 318. REFER TO ELEVATED SLAB CONSTRUCTION JOINT DETAIL ON S-503.
6. REFER TO SHEET S-001 FOR PLAN LEGEND, GENERAL NOTES AND ABBREVIATIONS.

KEY PLAN

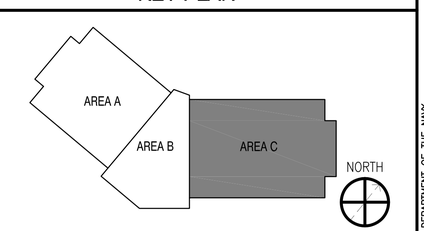

GRAPHIC SCALE

1/8"=1'-0" 0' 5' 10' 20' 30'

SYM	DESCRIPTION	DATE	APPR
5	AMENDMENT 005	03.08.16	BSS

NAVFAC

SEAL

A/E INFO

APPROVED: David W. Dunnfield
FOR COMMANDER NAVFAC

ACTIVITY: MICHELLE YARMER
SATISFACTORY TO DATE 10/23/15

DES BPF DRW BPF CHK WCT
<<PM/DM>> BHD/CAH
BRANCH MANAGER
CHIEF ENG/ARCH DWG
FIRE PROTECTION

DEPARTMENT OF THE NAVY
NAVAL FACILITIES ENGINEERING COMMAND
NORTHEAST IPT
NAVAL FACILITIES ENGINEERING COMMAND ~ MIDLANT
NAVAL SUPPORT ACTIVITY
NAVAL STATION NORFOLK, VA
PHILADELPHIA, PA

P-1501 DLA TROOP SUPPORT HQ FACILITY

FRAMING PLAN - SECOND FLOOR - AREA C

SCALE: AS NOTED
EPROJECT NO.: 1308282
CONSTR. CONTR. NO. N40085-16-R-3000
NAVFAC DRAWING NO. 12707179
SHEET 165 OF 613

S102C

DRAWFORM REVISION: 10 MARCH 2009

FILE NAME: P:\PA\WSA\MLCON\2015_1308282_P1501_DLA Troop Support HQ Facility\B_Design\Drawings\Sheet Files\07_Structural\BLDG-P1501-1308282-S-102C.dwg LAYOUT NAME: S102C PLOTTED: Tuesday, March 08, 2016 - 11:40am USER: william.c.thornton

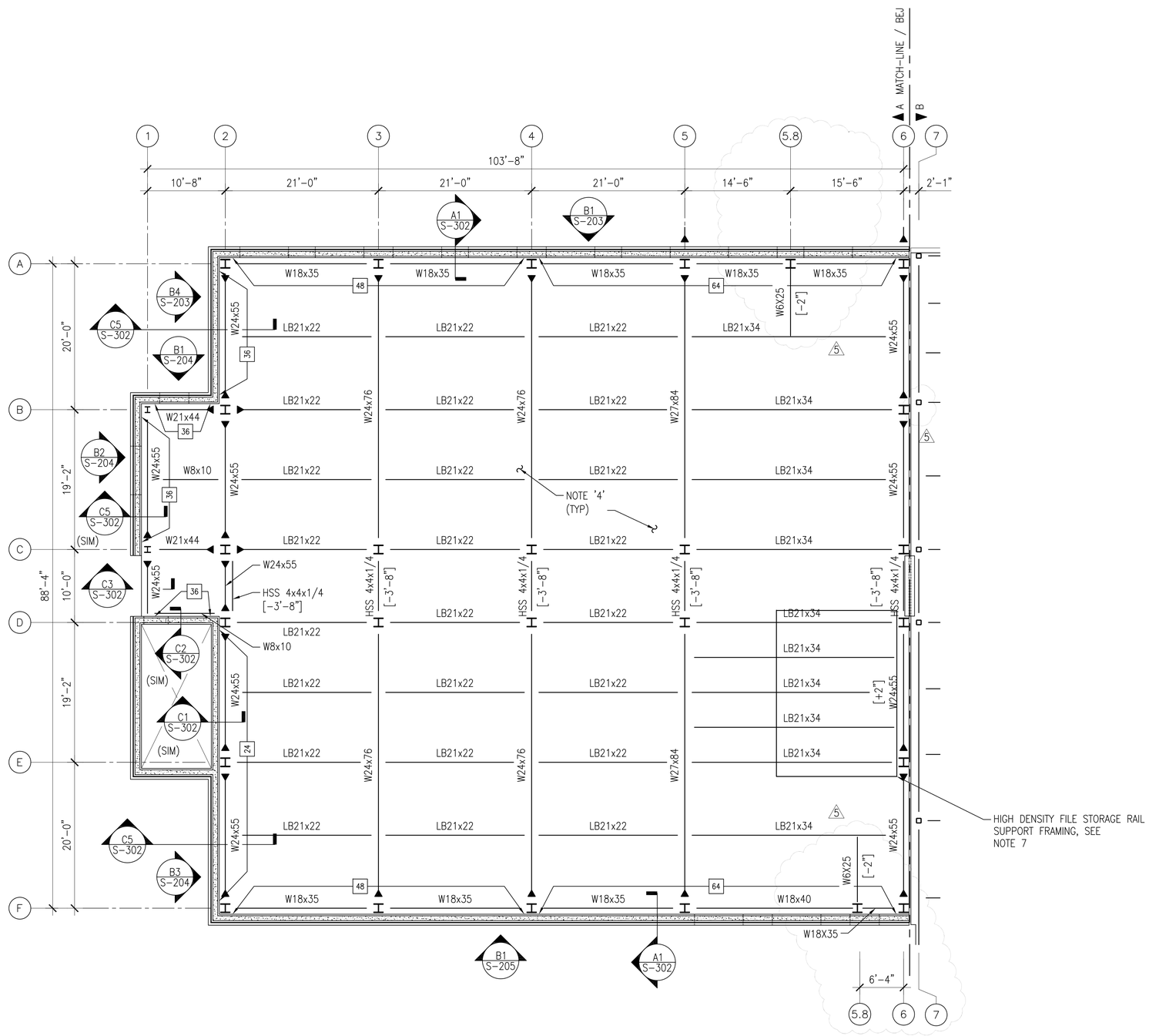

FRAMING PLAN - THIRD FLOOR - AREA A

SCALE: 1/8" = 1'-0"

GENERAL SHEET NOTES

1. REFERENCE TOP OF STEEL ELEVATION = +26'-4". DEVIATIONS FROM THE REFERENCE TOP OF STEEL ELEVATION ARE NOTED THUS [+X"] ON PLAN.
2. THIRD FLOOR ELEVATION = +26'-8".
3. BEAMS GRAPHICALLY DEPICTED ON GRIDS SHALL BE CENTERED ON THOSE GRIDS. BEAMS BETWEEN GRIDS SHALL BE EVENLY SPACED, NOT TO EXCEED 10'-8" ON CENTER, UNLESS OTHERWISE NOTED.
4. ELEVATED SLAB SHALL BE 4 INCH TOTAL THICKNESS SLAB ON 2"x18GA COMPOSITE STEEL DECK, CONTINUOUSLY REINFORCED WITH 6x6 W2.0xW2.0 WELDED WIRE FABRIC, LOCATED 1" CLEAR FROM TOP OF SLAB. DECK SPANS IN THE NORTH-SOUTH DIRECTION, UNLESS OTHERWISE NOTED.
5. PROVIDE MINIMUM NUMBER OF SLAB CONSTRUCTION JOINTS AS PRACTICAL I.A.W. A.C.I. 318. REFER TO ELEVATED SLAB CONSTRUCTION JOINT DETAIL ON S-503.
6. REFER TO SHEET S-001 FOR PLAN LEGEND, GENERAL NOTES AND ABBREVIATIONS.
7. HIGH DENSITY FILE STORAGE AREA. PROVIDE SUPPLEMENTAL SECONDARY FRAMING AS REQUIRED. SUBMIT AND OBTAIN APPROVAL OF SECONDARY FRAMING SHOP DRAWINGS BEFORE FABRICATION.

KEY PLAN

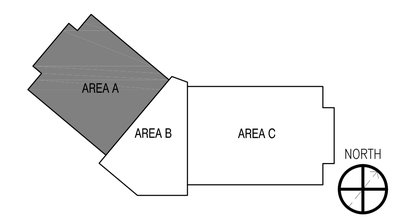

GRAPHIC SCALE

1/8"=1'-0" 0' 5' 10' 20' 30'

SYM	DESCRIPTION	DATE	APPR
5	AMENDMENT 005	03.08.16	BSS

A/E INFO

APPROVED: David W. Dunnfield
FOR COMMANDER NAVFAC

ACTIVITY: MICHELLE YARMER
SATISFACTORY TO DATE 10/23/15
DES: BPF DRW: BPF CHK: WCT
<<PM/DM>>: BHD/CAH
BRANCH MANAGER: Bonetti
CHIEF ENG/ARCH: DWG
FIRE PROTECTION

DEPARTMENT OF THE NAVY
NAVAL FACILITIES ENGINEERING COMMAND
NORTHEAST IPT
NAVAL FACILITIES ENGINEERING COMMAND ~ MIDLANT
NAVAL STATION NORFOLK, VA
NAVAL SUPPORT ACTIVITY
PHILADELPHIA, PA

P-1501 DLA TROOP SUPPORT HQ FACILITY

FRAMING PLAN - THIRD FLOOR - AREA A

SCALE: AS NOTED
EPROJECT NO.: 1308282
CONSTR. CONTR. NO. N40085-16-R-3000
NAVFAC DRAWING NO. 12707180
SHEET 166 OF 613

S103A

DRAWFORM REVISION: 10 MARCH 2009

FILE NAME: P:\PA\HSA\MILCON\2015_1308282_P1501_DLA Troop Support HQ Facility\B_Design\Drawings\Sheet Files\07_Structural\BLDG-P1501-1308282-S-103A.dwg LAYOUT NAME: S103A PLOTTED: Tuesday, March 08, 2016 - 10:32am USER: william.c.thornton

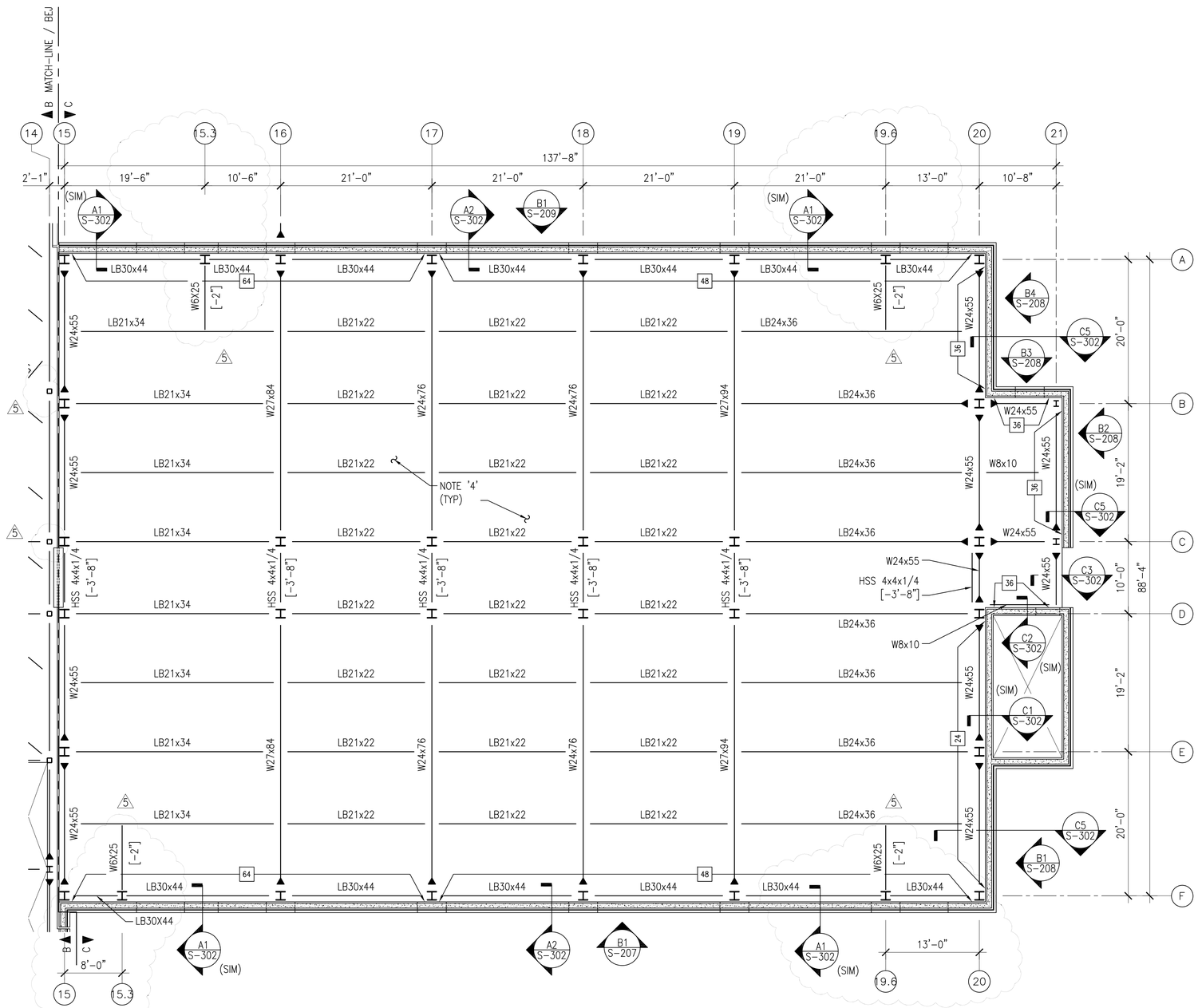

FRAMING PLAN - THIRD FLOOR - AREA C

SCALE: 1/8" = 1'-0"

GENERAL SHEET NOTES

1. REFERENCE TOP OF STEEL ELEVATION = +26'-4". DEVIATIONS FROM THE REFERENCE TOP OF STEEL ELEVATION ARE NOTED THUS [+X"] ON PLAN.
2. THIRD FLOOR ELEVATION = +26'-8".
3. BEAMS GRAPHICALLY DEPICTED ON GRIDS SHALL BE CENTERED ON THOSE GRIDS. BEAMS BETWEEN GRIDS SHALL BE EVENLY SPACED, NOT TO EXCEED 10'-8" ON CENTER, UNLESS OTHERWISE NOTED.
4. ELEVATED SLAB SHALL BE 4 INCH TOTAL THICKNESS SLAB ON 2"x18GA COMPOSITE STEEL DECK, CONTINUOUSLY REINFORCED WITH 6x6 W2.0xW2.0 WELDED WIRE FABRIC, LOCATED 1" CLEAR FROM TOP OF SLAB. DECK SPANS IN THE NORTH-SOUTH DIRECTION, UNLESS OTHERWISE NOTED.
5. PROVIDE MINIMUM NUMBER OF SLAB CONSTRUCTION JOINTS AS PRACTICAL I.A.W. A.C.I. 318. REFER TO ELEVATED SLAB CONSTRUCTION JOINT DETAIL ON S-503.
6. REFER TO SHEET S-001 FOR PLAN LEGEND, GENERAL NOTES AND ABBREVIATIONS.

KEY PLAN

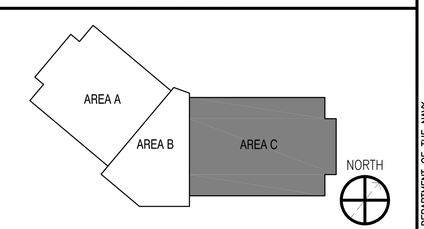

GRAPHIC SCALE

1/8"=1'-0" 0' 5' 10' 20' 30'

SYM	DESCRIPTION	DATE	APPR
5	AMENDMENT 005	03.08.16	BSS

NAVFAC

SEAL

A/E INFO

APPROVED: David W. Dunnfield
FOR COMMANDER NAVFAC

ACTIVITY
MICHELLE YARMER
SATISFACTORY TO DATE 10/23/15

DES BPF DRW BPF CHK WCT
<<PM/DM>> BHD/CAH
BRANCH MANAGER Bonetti
CHIEF ENG/ARCH DWG
FIRE PROTECTION

DEPARTMENT OF THE NAVY
NAVAL FACILITIES ENGINEERING COMMAND
NORTHEAST IPT
NAVAL SUPPORT ACTIVITY

NAVAL FACILITIES ENGINEERING COMMAND ~ MIDLANT
NAVAL STATION NORFOLK, VA

PHILADELPHIA, PA

P-1501 DLA TROOP SUPPORT HQ FACILITY

FRAMING PLAN - THIRD FLOOR - AREA C

SCALE: AS NOTED
EPROJECT NO.: 1308282
CONSTR. CONTR. NO. N40085-16-R-3000
NAVFAC DRAWING NO. 12707182
SHEET 168 OF 613

S103C

DRAWFORM REVISION: 10 MARCH 2009

FILE NAME: P:\PA\WSA\MLCON\2015_1308282_P1501_DLA Troop Support HQ Facility\B_Design\Drawings\Sheet Files\07_Structural\BLDG-P1501-1308282-S-103C.dwg LAYOUT NAME: S103C PLOTTED: Tuesday, March 08, 2016 - 11:43am USER: william.c.thornton

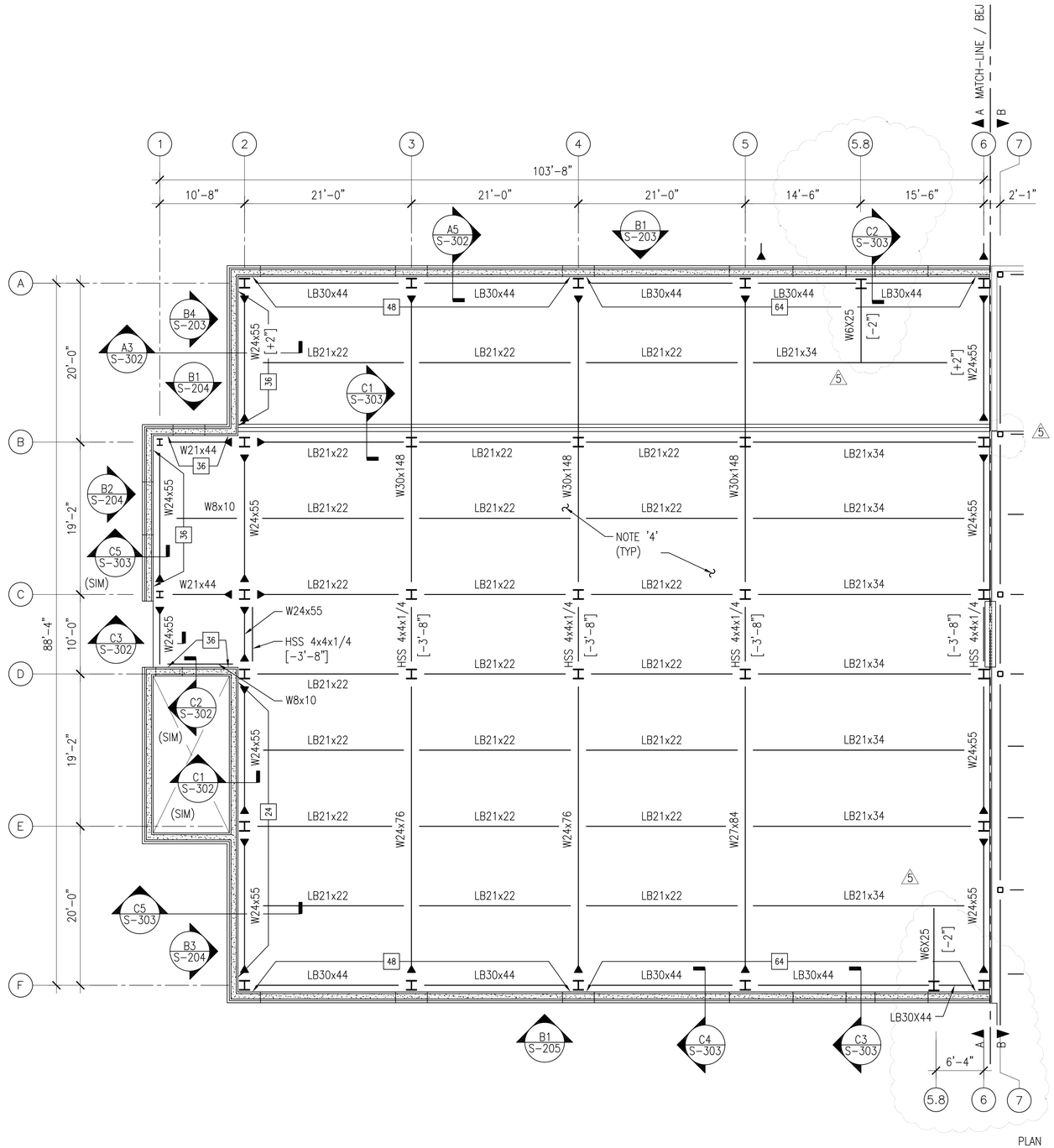

FRAMING PLAN - FOURTH FLOOR & LOW ROOF - AREA A

SCALE: 1/8" = 1'-0"

GENERAL SHEET NOTES

1. REFERENCE TOP OF STEEL ELEVATION = +39'-8". DEVIATIONS FROM THE REFERENCE TOP OF STEEL ELEVATION ARE NOTED THUS [+X"] ON PLAN.
2. FOURTH FLOOR ELEVATION = +40'-0".
3. BEAMS GRAPHICALLY DEPICTED ON GRIDS SHALL BE CENTERED ON THOSE GRIDS. BEAMS BETWEEN GRIDS SHALL BE EVENLY SPACED, NOT TO EXCEED 10'-8" ON CENTER, UNLESS OTHERWISE NOTED.
4. ELEVATED SLAB SHALL BE 4 INCH TOTAL THICKNESS SLAB ON 2"x18GA COMPOSITE STEEL DECK, CONTINUOUSLY REINFORCED WITH 6x6 W2.0xW2.0 WELDED WIRE FABRIC, LOCATED 1" CLEAR FROM TOP OF SLAB. DECK SPANS IN THE NORTH-SOUTH DIRECTION, UNLESS OTHERWISE NOTED.
5. PROVIDE MINIMUM NUMBER OF SLAB CONSTRUCTION JOINTS AS PRACTICAL I.A.W. A.C.I. 318. REFER TO ELEVATED SLAB CONSTRUCTION JOINT DETAIL ON S-503.
6. REFER TO SHEET S-001 FOR PLAN LEGEND, GENERAL NOTES AND ABBREVIATIONS.

KEY PLAN

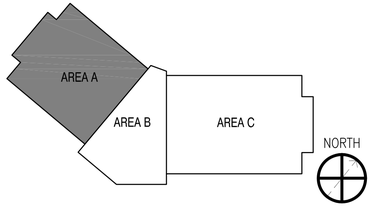

GRAPHIC SCALE

1/8"=1'-0" 0' 5' 10' 20' 30'

SYM	DESCRIPTION	DATE	APPR
5	AMENDMENT 005	03.08.16	BSS

NAVFAC

SEAL

A/E INFO

APPROVED David W. Greenfield FOR COMMANDER NAVFAC

ACTIVITY MICHELLE YARMER

SATISFACTORY TO DATE 10/23/15

DES BPF DRW BPF CHK WCT

<<PM/DM>> BHD/CAH

BRANCH MANAGER Bonsthe

CHIEF ENG/ARCH DWG

FIRE PROTECTION

DEPARTMENT OF THE NAVY
NAVAL FACILITIES ENGINEERING COMMAND
NAVAL FACILITIES ENGINEERING COMMAND ~ MIDLANT
NORTHEAST IPT NAVAL STATION NORFOLK, VA

NAVAL SUPPORT ACTIVITY PHILADELPHIA, PA

P-1501 DLA TROOP SUPPORT HQ FACILITY

FRAMING PLAN - FOURTH FLOOR & LOW ROOF - AREA A

SCALE: AS NOTED

EPROJECT NO.: 1308282

CONSTR. CONTR. NO. N40085-16-R-3000

NAVFAC DRAWING NO. 12707183

SHEET 169 OF 613

S104A

DRAWFORM REVISION: 10 MARCH 2009

FILE NAME: P:\PA\NSA\MILCON\2015_1308282_P1501_DLA Troop Support HQ Facility\B_Design\Drawings\Sheet Files\07_Structural\BLDG-P1501-1308282-S-104A.dwg LAYOUT NAME: S104A PLOTTED: Tuesday, March 08, 2016 - 10:41am USER: william.c.thornton

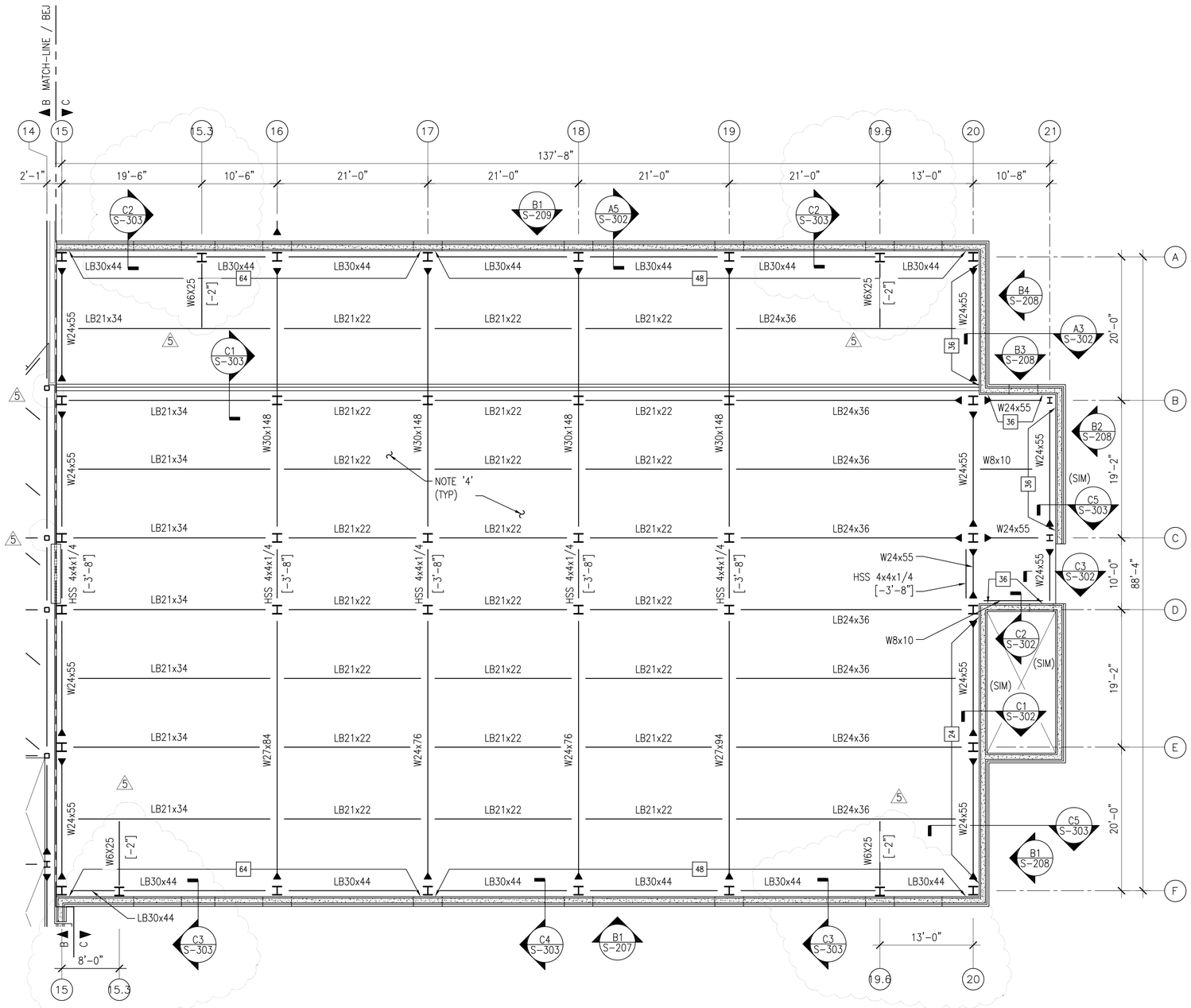

FRAMING PLAN - FOURTH FLOOR & LOW ROOF - AREA C

SCALE: 1/8" = 1'-0"

GENERAL SHEET NOTES

1. REFERENCE TOP OF STEEL ELEVATION = +39'-8". DEVIATIONS FROM THE REFERENCE TOP OF STEEL ELEVATION ARE NOTED THUS [+X"] ON PLAN.
2. FOURTH FLOOR ELEVATION = +40'-0".
3. BEAMS GRAPHICALLY DEPICTED ON GRIDS SHALL BE CENTERED ON THOSE GRIDS. BEAMS BETWEEN GRIDS SHALL BE EVENLY SPACED, NOT TO EXCEED 10'-8" ON CENTER, UNLESS OTHERWISE NOTED.
4. ELEVATED SLAB SHALL BE 4 INCH TOTAL THICKNESS SLAB ON 2"x18GA COMPOSITE STEEL DECK, CONTINUOUSLY REINFORCED WITH 6x6 W2.0xW2.0 WELDED WIRE FABRIC, LOCATED 1" CLEAR FROM TOP OF SLAB. DECK SPANS IN THE NORTH-SOUTH DIRECTION, UNLESS OTHERWISE NOTED.
5. PROVIDE MINIMUM NUMBER OF SLAB CONSTRUCTION JOINTS AS PRACTICAL I.A.W. A.C.I. 318. REFER TO ELEVATED SLAB CONSTRUCTION JOINT DETAIL ON S-503.
6. REFER TO SHEET S-001 FOR PLAN LEGEND, GENERAL NOTES AND ABBREVIATIONS.

KEY PLAN

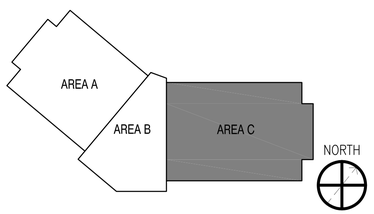

GRAPHIC SCALE

1/8"=1'-0" 0' 5' 10' 20' 30'

SYM	DESCRIPTION	DATE	APPR
5	AMENDMENT 005	03.08.16	

NAVFAC

SEAL

A/E INFO

APPROVED: David W. Dunnfield
FOR COMMANDER NAVFAC

ACTIVITY: MICHELLE YARMER
SATISFACTORY TO DATE 10/23/15

DES BPF DRW BPF CHK WCT
<<PM/DM>> BHD/CAH
BRANCH MANAGER Bonetti
CHIEF ENG/ARCH DWG
FIRE PROTECTION

DEPARTMENT OF THE NAVY
NAVAL FACILITIES ENGINEERING COMMAND
NORTHEAST IPT
NAVAL SUPPORT ACTIVITY

NAVAL FACILITIES ENGINEERING COMMAND ~ MIDLANT
NAVAL STATION NORFOLK, VA

PHILADELPHIA, PA

P-1501 DLA TROOP SUPPORT HQ FACILITY

FRAMING PLAN - FOURTH FLOOR & LOW ROOF - AREA C

SCALE: AS NOTED
EPROJECT NO.: 1308282
CONSTR. CONTR. NO. N40085-16-R-3000
NAVFAC DRAWING NO. 12707185
SHEET 171 OF 613

S104C

DRAWFORM REVISION: 10 MARCH 2009

FILE NAME: P:\PA\WSA\MLCON\2015_1308282_P1501_DLA Troop Support HQ Facility\B_Design\Drawings\Sheet Files\07_Structural\BLDG-P1501-1308282-S-104C.dwg LAYOUT NAME: S104C PLOTTED: Tuesday, March 08, 2016 - 11:49am USER: william.c.thornton

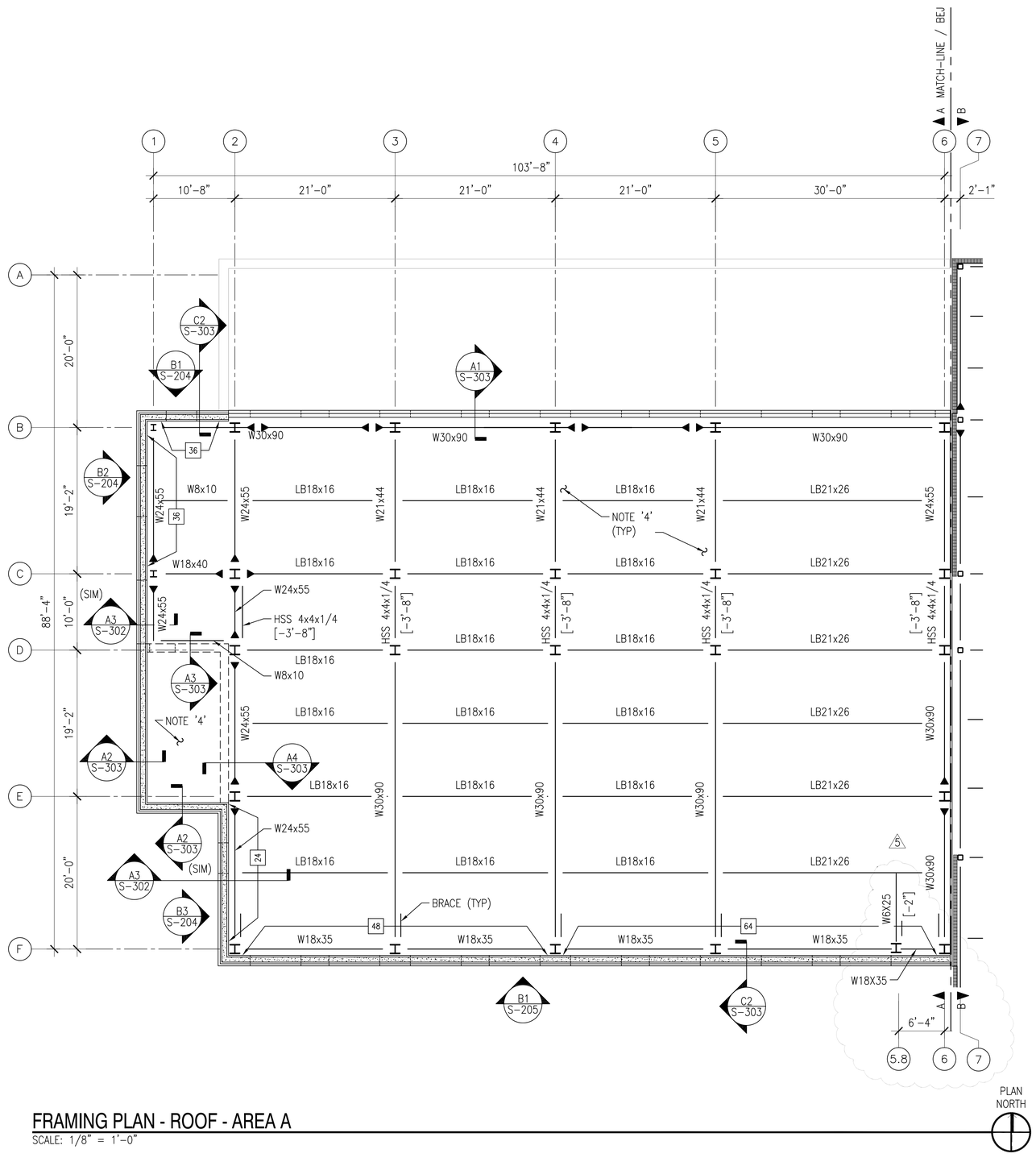

FRAMING PLAN - ROOF - AREA A

SCALE: 1/8" = 1'-0"

GENERAL SHEET NOTES

1. REFERENCE TOP OF STEEL ELEVATION = +53'-8". DEVIATIONS FROM THE REFERENCE TOP OF STEEL ELEVATION ARE NOTED THUS [+X"] ON PLAN.
2. ROOF FLOOR ELEVATION = +54'-0".
3. BEAMS GRAPHICALLY DEPICTED ON GRIDS SHALL BE CENTERED ON THOSE GRIDS. BEAMS BETWEEN GRIDS SHALL BE EVENLY SPACED, NOT TO EXCEED 10'-8" ON CENTER, UNLESS OTHERWISE NOTED.
4. ELEVATED SLAB SHALL BE 4 INCH TOTAL THICKNESS SLAB ON 2"x18GA COMPOSITE STEEL DECK, CONTINUOUSLY REINFORCED WITH 6x6 W2.0xW2.0 WELDED WIRE FABRIC, LOCATED 1" CLEAR FROM TOP OF SLAB. DECK SPANS IN THE NORTH-SOUTH DIRECTION, UNLESS OTHERWISE NOTED.
5. PROVIDE MINIMUM NUMBER OF SLAB CONSTRUCTION JOINTS AS PRACTICAL I.A.W. A.C.I. 318. REFER TO ELEVATED SLAB CONSTRUCTION JOINT DETAIL ON S-503.
6. REFER TO SHEET S-001 FOR PLAN LEGEND, GENERAL NOTES AND ABBREVIATIONS.

KEY PLAN

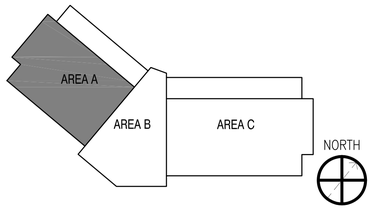

GRAPHIC SCALE

1/8"=1'-0" 0' 5' 10' 20' 30'

SYM	DESCRIPTION	DATE	APPR
5	AMENDMENT 005	03.08.16	BSS

NAVFAC

SEAL

A/E INFO

APPROVED: David W. Dunnfield
FOR COMMANDER NAVFAC

ACTIVITY: MICHELLE YARMER
SATISFACTORY TO DATE 10/23/15
DES BPF DRW BPF CHK WCT
<<PM/DM>> BHD/CAH
BRANCH MANAGER Bonetti
CHIEF ENG/ARCH DWG
FIRE PROTECTION

DEPARTMENT OF THE NAVY
NAVAL FACILITIES ENGINEERING COMMAND ~ MIDLANT
NAVAL FACILITIES ENGINEERING COMMAND
NAVAL STATION NORFOLK, VA
NORTHEAST IPT
NAVAL SUPPORT ACTIVITY
PHILADELPHIA, PA

P-1501 DLA TROOP SUPPORT HQ FACILITY

FRAMING PLAN - ROOF - AREA A

SCALE: AS NOTED
EPROJECT NO.: 1308282
CONSTR. CONTR. NO. N40085-16-R-3000
NAVFAC DRAWING NO. 12707186
SHEET 172 OF 613

S105A

DRAWFORM REVISION: 10 MARCH 2009

FILE NAME: P:\PA\WSA\WILCON\2015_1308282_P1501_DLA Troop Support HQ Facility\B_Design\Drawings\Sheet Files\07_Structure\BLDG-P1501-1308282-S-105A.dwg LAYOUT NAME: S105A PLOTTED: Tuesday, March 08, 2016 - 10:48am USER: william.c.thornton

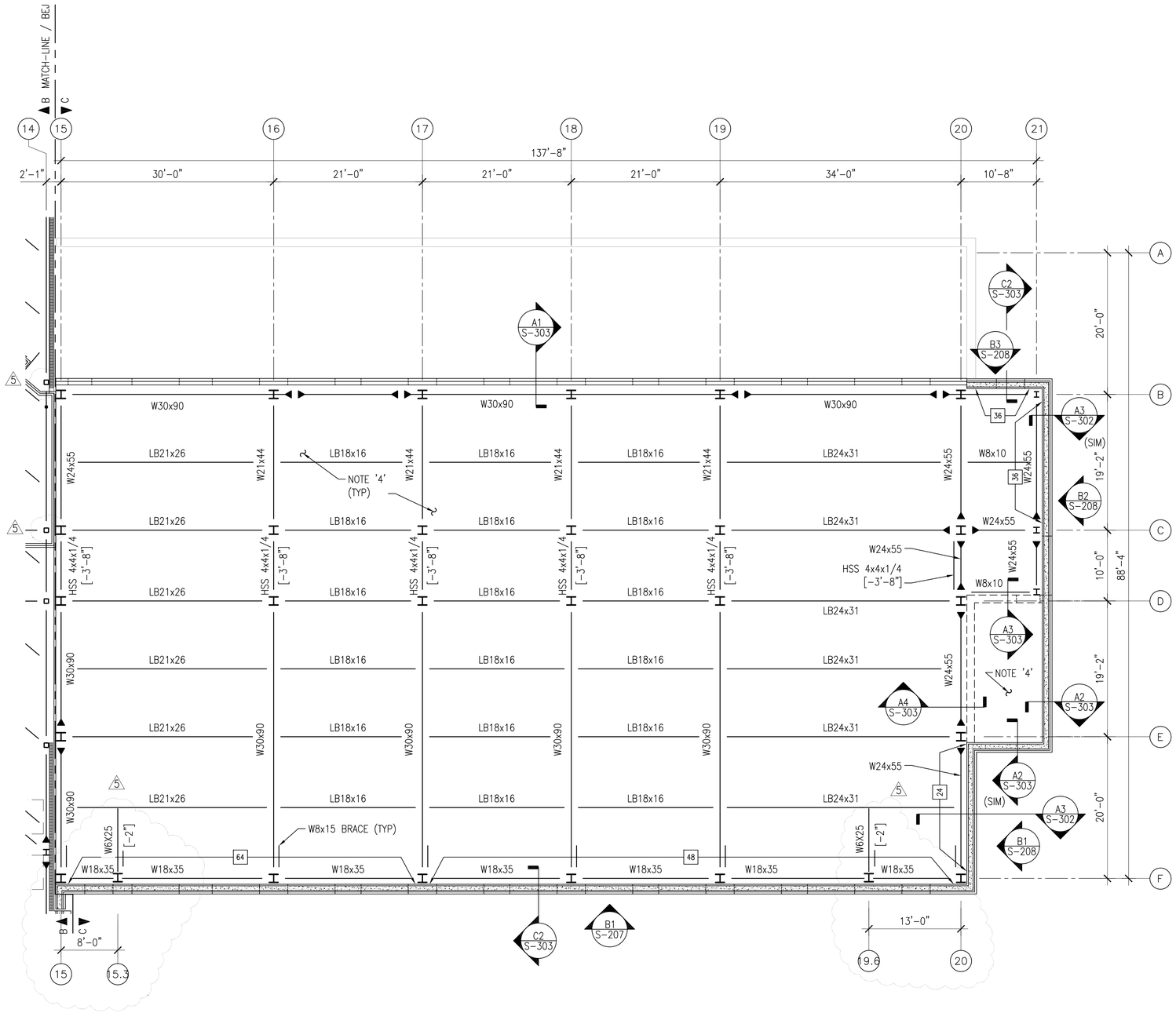

FRAMING PLAN - ROOF - AREA C

SCALE: 1/8" = 1'-0"

GENERAL SHEET NOTES

1. REFERENCE TOP OF STEEL ELEVATION = +53'-8". DEVIATIONS FROM THE REFERENCE TOP OF STEEL ELEVATION ARE NOTED THUS [+X"] ON PLAN.
2. ROOF ELEVATION = +54'-0".
3. BEAMS GRAPHICALLY DEPICTED ON GRIDS SHALL BE CENTERED ON THOSE GRIDS. BEAMS BETWEEN GRIDS SHALL BE EVENLY SPACED, NOT TO EXCEED 10'-8" ON CENTER, UNLESS OTHERWISE NOTED.
4. ELEVATED SLAB SHALL BE 4 INCH TOTAL THICKNESS SLAB ON 2"x18GA COMPOSITE STEEL DECK, CONTINUOUSLY REINFORCED WITH 6x6 W2.0xW2.0 WELDED WIRE FABRIC, LOCATED 1" CLEAR FROM TOP OF SLAB. DECK SPANS IN THE NORTH-SOUTH DIRECTION, UNLESS OTHERWISE NOTED.
5. PROVIDE MINIMUM NUMBER OF SLAB CONSTRUCTION JOINTS AS PRACTICAL I.A.W. A.C.I. 318. REFER TO ELEVATED SLAB CONSTRUCTION JOINT DETAIL ON S-503.
6. REFER TO SHEET S-001 FOR PLAN LEGEND, GENERAL NOTES AND ABBREVIATIONS.

KEY PLAN

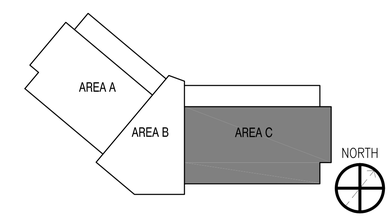

GRAPHIC SCALE

1/8"=1'-0" 0' 5' 10' 20' 30'

SYM	DESCRIPTION	DATE	APPR
5	AMENDMENT 005	03.08.16	

NAVFAC

SEAL

A/E INFO

APPROVED: David W. Dunnfield
FOR COMMANDER NAVFAC

ACTIVITY: MICHELLE YARMER
SATISFACTORY TO DATE 10/23/15
DES BPF DRW BPF CHK WCT
<<PM/DM>> BHD/CAH
BRANCH MANAGER
CHIEF ENG/ARCH DWG
FIRE PROTECTION

DEPARTMENT OF THE NAVY
NAVAL FACILITIES ENGINEERING COMMAND
NORTHEAST IPT
NAVAL FACILITIES ENGINEERING COMMAND ~ MIDLANT
NAVAL SUPPORT ACTIVITY NAVAL STATION NORFOLK, VA
PHILADELPHIA, PA

P-1501 DLA TROOP SUPPORT HQ FACILITY

FRAMING PLAN - ROOF - AREA C

SCALE: AS NOTED
EPROJECT NO.: 1308282
CONSTR. CONTR. NO. N40085-16-R-3000
NAVFAC DRAWING NO. 12707188
SHEET 174 OF 613

S105C

DRAWFORM REVISION: 10 MARCH 2009

FILE NAME: P:\PAVNSA\MILCON\2015_1308282_P1501_DLA Troop Support HQ Facility\B_Design\Drawings\Sheet Files\07_Structural\BLDG-P1501-1308282-S-105C.dwg LAYOUT NAME: S105C PLOTTED: Tuesday, March 08, 2016 - 11:51am USER: william.c.thornton

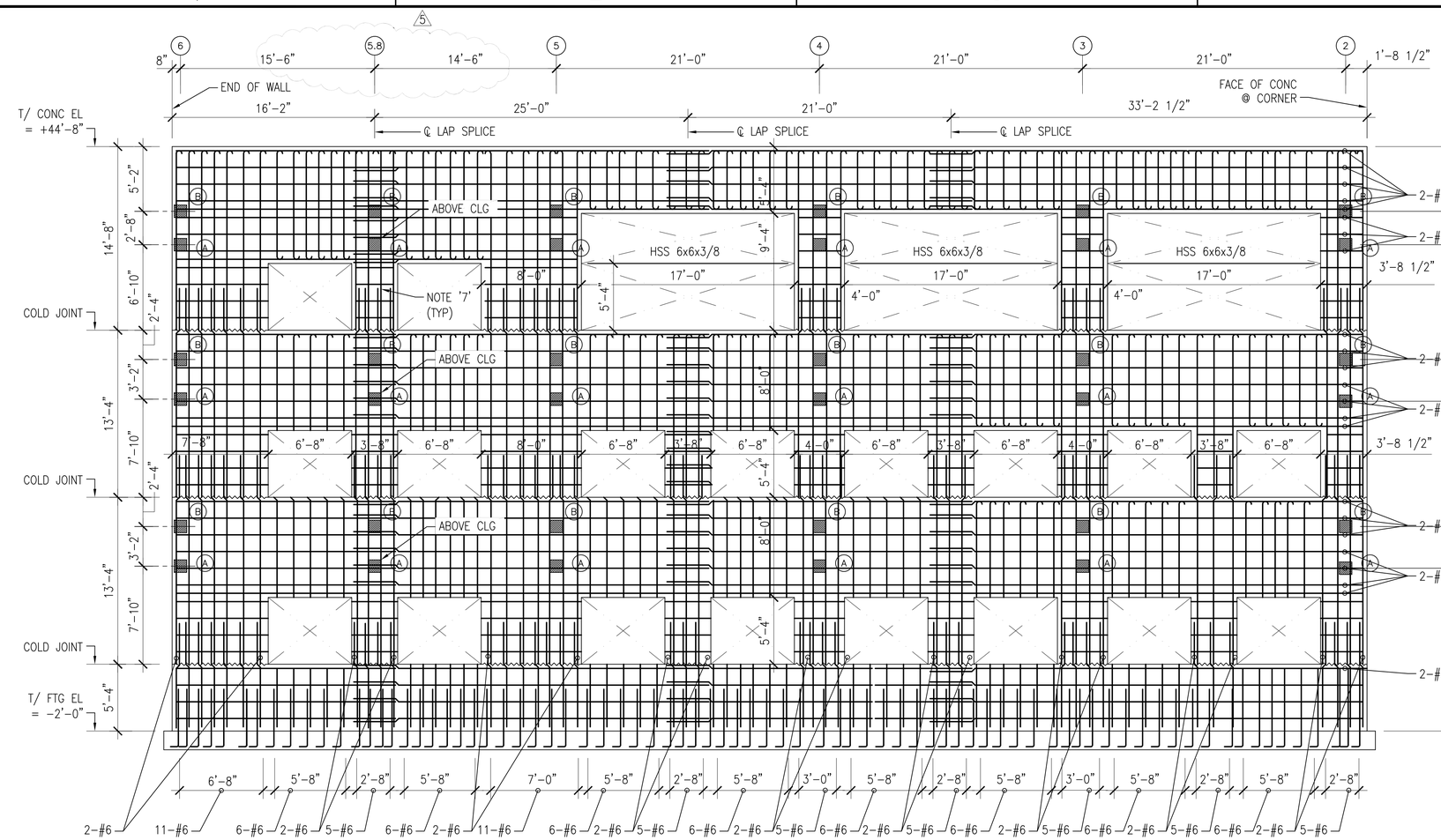

B1 ICF WALL ELEVATION - AREA A - GRID A

SCALE: 3/16" = 1'-0"

S101A, S102A, S103A, S104A

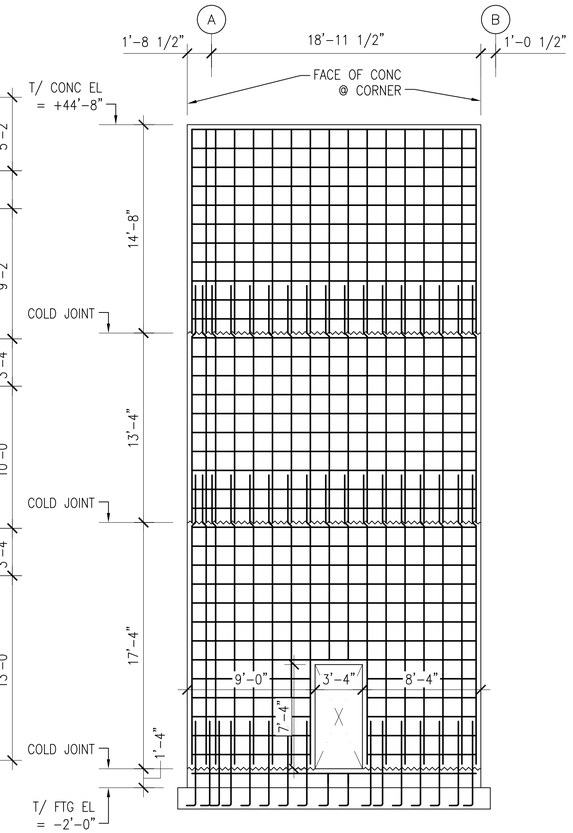

B4 ICF WALL ELEVATION - AREA A - GRID 2

SCALE: 3/16" = 1'-0"

S101A, S102A, S103A, S104A

GENERAL SHEET NOTES

1. SEE SHEET S-001 FOR CAST-IN-PLACE CONCRETE GENERAL NOTES.
2. PROVIDE #5 @ 16" O/C MAX VERTICAL REINFORCEMENT, UNLESS OTHERWISE NOTED. LOCATE VERTICAL REINFORCEMENT AS SHOWN. INDIVIDUAL BARS MAY BE SHIFTED TO ALIGN WITH FORM UNIT WEBS; HOWEVER, SPACING SHALL NOT EXCEED 1'-6" ON CENTER. VERTICAL REINFORCEMENT ON ONE SIDE OF AN OPENING SHALL BE THE SAME SIZE AND QUANTITY AS THAT ON THE OPPOSITE SIDE, UNLESS OTHERWISE NOTED.
3. PROVIDE #5 @ 16" O/C MAX HORIZONTAL REINFORCEMENT, UNLESS OTHERWISE NOTED. SPACE HORIZONTAL REINFORCEMENT AT 1'-4" ON CENTER, UNLESS OTHERWISE NOTED OR SHOWN.
4. BAR DESIGNATIONS APPLY TO THE INDICATED BAR AND TO ALL BARS LAP SPLICED IN LINE WITH THAT BAR, FROM ONE END OF THE ELEVATION TO THE OTHER.
5. EACH BAR DEPICTED REPRESENTS A SERIES OF BARS WITH A PARTICULAR LENGTH AND CONFIGURATION. THE SPLICES OR BENDS DEPICTED SHALL APPLY TO ALL BARS IN THE SERIES.
6. SPACE VERTICAL REINFORCEMENT EVENLY WITHIN THE INDICATED EXTENTS. FIRST AND LAST BARS SHALL BE LOCATED AT THE EXTREME ENDS OF THE INDICATED EXTENTS. VERTICAL REINFORCEMENT ABOVE AN OPENING SHALL BE THE SAME SIZE AND QUANTITY AS THAT BELOW IT, UNLESS OTHERWISE NOTED.
7. FORM UNIT COURSES SHALL PROVIDE SPACING OF HORIZONTAL BARS BETWEEN 16" AND 18" ON CENTER MAX. IF FORM UNIT CROSS WEBS CANNOT ACCOMMODATE THIS SPACING, ADDITIONAL HORIZONTAL BARS SHALL BE TIED BETWEEN THE CROSS WEBS. HORIZONTAL REINFORCEMENT ON ONE SIDE OF AN OPENING SHALL BE THE SAME SIZE AND QUANTITY AS THAT ON THE OTHER SIDE, UNLESS OTHERWISE NOTED.
8. DISTANCE FROM ENDS OF REINFORCEMENT TO CONCRETE SURFACES AT ENDS OF WALLS OR TOPS OF WALLS AND TO ICF FORMS AT CORNERS SHALL BE 2 INCHES, EXCEPT FOR STIRRUPS, WHICH SHALL BE POSITIONED AS INDICATED IN THE TYPICAL DETAILS.
9. REINFORCEMENT SHALL BE CONTINUOUS. SPLICES SHALL OCCUR ONLY WHERE SPECIFICALLY INDICATED ON THE ELEVATIONS.
10. CONCRETE WALLS SHALL BE PLACED MONOLITHICALLY. COLD JOINTS SHALL OCCUR ONLY WHERE SPECIFICALLY INDICATED ON THE ELEVATIONS.
11. ICF WALL HEAVY CONNECTION NOTED THUS: ▩ – SEE DETAIL ON S-504.

GRAPHIC SCALE

3/16" = 1'-0" 0 4' 8' 12'

SYM	DESCRIPTION	DATE	APPR
5	AMENDMENT 005	03.08.16	BSS

NAVFAC

SEAL

A/E INFO

APPROVED: David W. Dunnfield
FOR COMMANDER NAVFAC

ACTIVITY: MICHELLE YARMER

SATISFACTORY TO DATE 10/23/15

DES BPF DRW BPF CHK JMS

<<PM/DM>> BHD/CAH

BRANCH MANAGER: Bonetta

CHIEF ENG/ARCH: DWG

FIRE PROTECTION

DEPARTMENT OF THE NAVY
NAVAL FACILITIES ENGINEERING COMMAND
NORTHEAST IPT
NAVAL FACILITIES ENGINEERING COMMAND ~ MIDLANT
NAVAL STATION NORFOLK, VA
NAVAL SUPPORT ACTIVITY
PHILADELPHIA, PA

P-1501 DLA TROOP SUPPORT HQ FACILITY

ICF WALL ELEVATIONS – AREA A

SCALE: AS NOTED

EPROJECT NO.: 1308282

CONSTR. CONTR. NO. N40085-16-R-3000

NAVFAC DRAWING NO. 12707191

SHEET 177 OF 613

S-203

DRAWFORM REVISION: 10 MARCH 2009

FILE NAME: P:\PAVNSA\MILCON\2015_1308282_P1501_DLA Troop Support HQ Facility\B_Design\Drawings\Sheet Files\07_Structural\BLDG-P1501-1308282-S-203.dwg LAYOUT NAME: S-203 PLOTTED: Tuesday, March 08, 2016 - 12:06pm USER: william.c.thornton

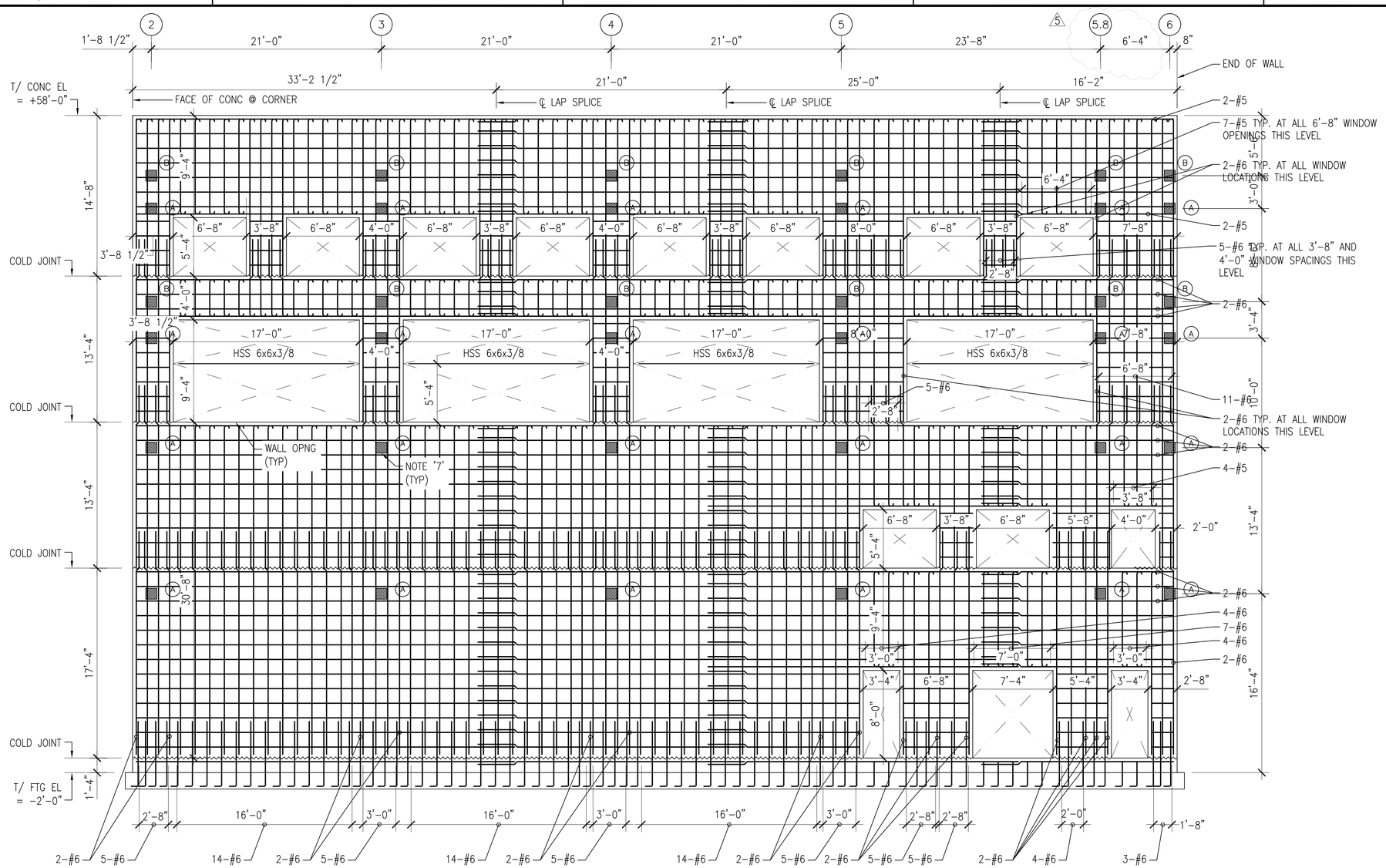

B1 ICF WALL ELEVATION - AREA A - GRID F

SCALE: 3/16" = 1'-0"

S101A, S102A, S103A, S104A, S105A

GENERAL SHEET NOTES

1. BAR DESIGNATIONS APPLY TO THE INDICATED BAR AND TO ALL BARS LAP SPLICED IN LINE WITH THAT BAR, FROM ONE END OF THE ELEVATION TO THE OTHER.
2. PROVIDE #5 @ 16" O/C MAX VERTICAL REINFORCEMENT, UNLESS OTHERWISE NOTED. LOCATE VERTICAL REINFORCEMENT AS SHOWN. INDIVIDUAL BARS MAY BE SHIFTED TO ALIGN WITH FORM UNIT WEBS; HOWEVER, SPACING SHALL NOT EXCEED 1'-6" ON CENTER. VERTICAL REINFORCEMENT ON ONE SIDE OF AN OPENING SHALL BE THE SAME SIZE AND QUANTITY AS THAT ON THE OPPOSITE SIDE, UNLESS OTHERWISE NOTED.
3. PROVIDE #5 @ 16" O/C MAX HORIZONTAL REINFORCEMENT, UNLESS OTHERWISE NOTED. SPACE HORIZONTAL REINFORCEMENT AT 1'-4" ON CENTER, UNLESS OTHERWISE NOTED OR SHOWN.
4. DISTANCE FROM END OF REINFORCEMENT TO CONCRETE SURFACES AT ENDS OF WALLS OR TOPS OF WALLS AND TO ICF FORMS AT CORNERS SHALL BE 2 INCHES.
5. REINFORCEMENT SHALL BE CONTINUOUS. SPLICES SHALL OCCUR ONLY WHERE SPECIFICALLY INDICATED ON THE ELEVATIONS.
6. CONCRETE WALLS SHALL BE PLACED MONOLITHICALLY. COLD JOINTS SHALL OCCUR ONLY WHERE SPECIFICALLY INDICATED ON THE ELEVATIONS.
7. ICF WALL HEAVY CONNECTIONS SHOWN THUS: ■ – SEE DETAIL ON S-504.

GRAPHIC SCALE

3/16" = 1'-0" 0 4' 8' 12'

SYM	DESCRIPTION	DATE	APPR
5	AMENDMENT 005	03.08.16	BSS

NAVFAC

SEAL

A/E INFO

APPROVED: David W. Dunnfield
FOR COMMANDER NAVFAC

ACTIVITY: MICHELLE YARMER
SATISFACTORY TO DATE 10/23/15
DES BPF | DRW BPF | CHK WCT
<<PM/DM>> BHD/CAH
BRANCH MANAGER: Beverly
CHIEF ENG/ARCH: DWG
FIRE PROTECTION

DEPARTMENT OF THE NAVY
NAVAL FACILITIES ENGINEERING COMMAND
NORTHEAST IPT
NAVAL FACILITIES ENGINEERING COMMAND ~ MIDLANT
NAVAL STATION NORFOLK, VA
NAVAL SUPPORT ACTIVITY
PHILADELPHIA, PA

P-1501 DLA TROOP SUPPORT HQ FACILITY

ICF WALL ELEVATIONS – AREA A

SCALE: AS NOTED
EPROJECT NO.: 1308282
CONSTR. CONTR. NO. N40085-16-R-3000
NAVFAC DRAWING NO. 12707193
SHEET 179 OF 613

S-205

DRAWFORM REVISION: 10 MARCH 2009

FILE NAME: P:\PAVNSA\MILCON\2015_1308282_P1501_DLA Troop Support HQ Facility\B_Design\Drawings\Sheet Files\07_Structural\BLDG-P1501-1308282-S-205.dwg LAYOUT NAME: S-205 PLOTTED: Tuesday, March 08, 2016 - 12:10pm USER: william.c.thornton

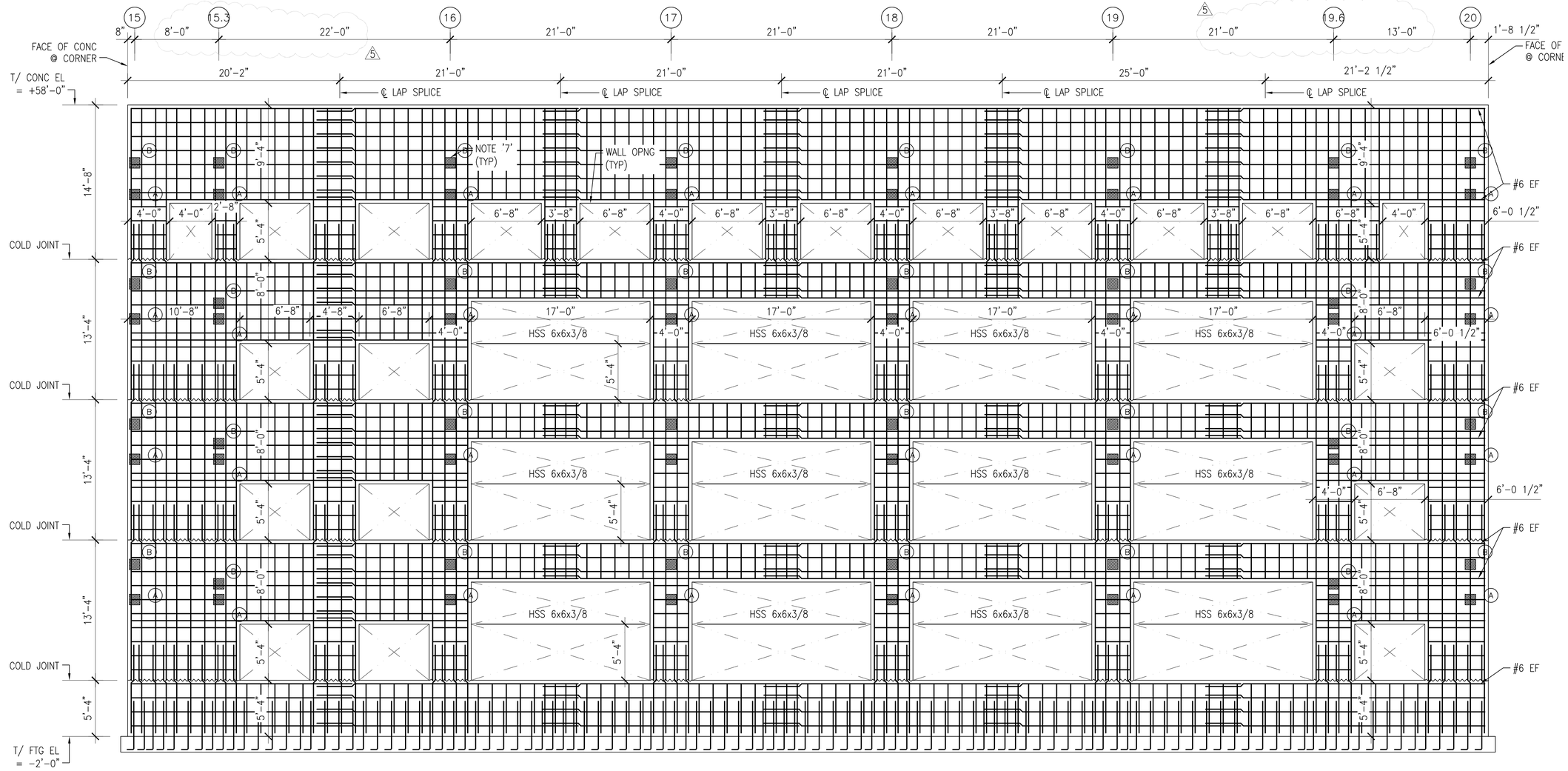

B1 ICF WALL ELEVATION - AREA C - GRID F

SCALE: 3/16" = 1'-0"

S101C, S102C, S103C, S104C, S105C

GENERAL SHEET NOTES

1. BAR DESIGNATIONS APPLY TO THE INDICATED BAR AND TO ALL BARS LAP SPLICED IN LINE WITH THAT BAR, FROM ONE END OF THE ELEVATION TO THE OTHER.
2. PROVIDE #5 @ 16" O/C MAX VERTICAL REINFORCEMENT, UNLESS OTHERWISE NOTED. LOCATE VERTICAL REINFORCEMENT AS SHOWN. INDIVIDUAL BARS MAY BE SHIFTED TO ALIGN WITH FORM UNIT WEBS; HOWEVER, SPACING SHALL NOT EXCEED 1'-6" ON CENTER. VERTICAL REINFORCEMENT ON ONE SIDE OF AN OPENING SHALL BE THE SAME SIZE AND QUANTITY AS THAT ON THE OPPOSITE SIDE, UNLESS OTHERWISE NOTED.
3. PROVIDE #5 @ 16" O/C MAX HORIZONTAL REINFORCEMENT, UNLESS OTHERWISE NOTED. SPACE HORIZONTAL REINFORCEMENT AT 1'-4" ON CENTER, UNLESS OTHERWISE NOTED OR SHOWN.
4. DISTANCE FROM END OF REINFORCEMENT TO CONCRETE SURFACES AT ENDS OF WALLS OR TOPS OF WALLS AND TO ICF FORMS AT CORNERS SHALL BE 2 INCHES.
5. REINFORCEMENT SHALL BE CONTINUOUS. SPLICES SHALL OCCUR ONLY WHERE SPECIFICALLY INDICATED ON THE ELEVATIONS.
6. CONCRETE WALLS SHALL BE PLACED MONOLITHICALLY. COLD JOINTS SHALL OCCUR ONLY WHERE SPECIFICALLY INDICATED ON THE ELEVATIONS.
7. ICF WALL HEAVY CONNECTIONS SHOWN THUS: ■ – SEE DETAIL ON S-504.

GRAPHIC SCALE

3/16" = 1'-0" 0 4' 8' 12'

SYM	DESCRIPTION	DATE	APPR
5	AMENDMENT 005	03.08.16	BSS

NAVFAC

SEAL

A/E INFO

APPROVED: David W. Dunnfield
FOR COMMANDER NAVFAC

ACTIVITY: MICHELLE YARMER

SATISFACTORY TO DATE 10/23/15

DES: BPF DRW: BPF CHK: JMS

<<PM/DM>>: BHD/CAH

BRANCH MANAGER: Bonetti

CHIEF ENG/ARCH: DWG

FIRE PROTECTION

DEPARTMENT OF THE NAVY
NAVAL FACILITIES ENGINEERING COMMAND
NORTHEAST IPT
NAVAL FACILITIES ENGINEERING COMMAND ~ MIDLANT
NAVAL STATION NORFOLK, VA
NAVAL SUPPORT ACTIVITY
PHILADELPHIA, PA

P-1501 DLA TROOP SUPPORT HQ FACILITY

ICF WALL ELEVATIONS – AREA C

SCALE: AS NOTED

EPROJECT NO.: 1308282

CONSTR. CONTR. NO. N40085-16-R-3000

NAVFAC DRAWING NO. 12707195

SHEET 181 OF 613

S-207

DRAWFORM REVISION: 10 MARCH 2009

FILE NAME: P:\PA\NSA\MILCON\2015_1308282_P1501_DLA Troop Support HQ Facility\B_Design\Drawings\Sheet Files\07_Structural\BLDG-P1501-1308282-S-207.dwg LAYOUT NAME: S-207 PLOTTED: Tuesday, March 08, 2016 - 12:16pm USER: william.c.thornton

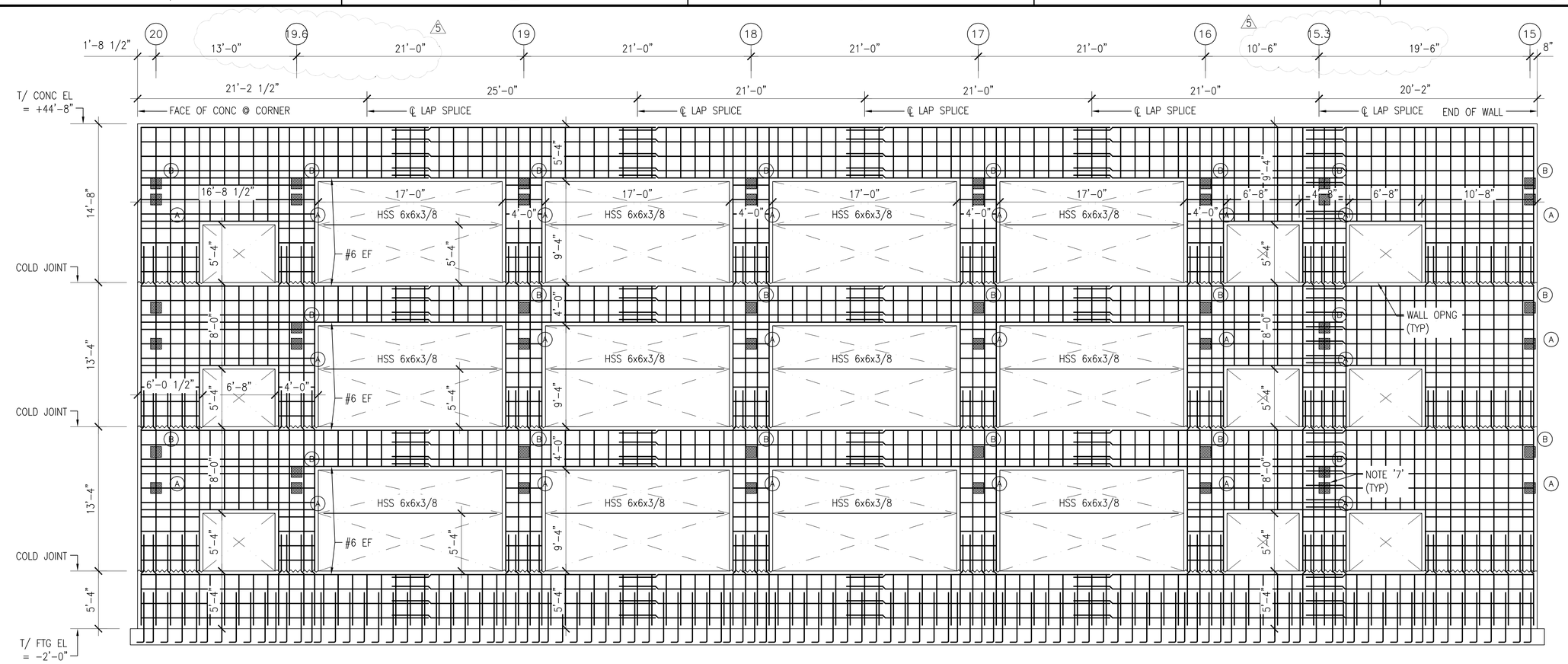

B1 ICF WALL ELEVATION - AREA C - GRID A

SCALE: 3/16" = 1'-0"

S101C, S102C, S103C, S104C

GENERAL SHEET NOTES

1. BAR DESIGNATIONS APPLY TO THE INDICATED BAR AND TO ALL BARS LAP SPLICED IN LINE WITH THAT BAR, FROM ONE END OF THE ELEVATION TO THE OTHER.
2. PROVIDE #5 @ 16" O/C MAX VERTICAL REINFORCEMENT, UNLESS OTHERWISE NOTED. LOCATE VERTICAL REINFORCEMENT AS SHOWN. INDIVIDUAL BARS MAY BE SHIFTED TO ALIGN WITH FORM UNIT WEBS; HOWEVER, SPACING SHALL NOT EXCEED 1'-6" ON CENTER. VERTICAL REINFORCEMENT ON ONE SIDE OF AN OPENING SHALL BE THE SAME SIZE AND QUANTITY AS THAT ON THE OPPOSITE SIDE, UNLESS OTHERWISE NOTED.
3. PROVIDE #5 @ 16" O/C MAX HORIZONTAL REINFORCEMENT, UNLESS OTHERWISE NOTED. SPACE HORIZONTAL REINFORCEMENT AT 1'-4" ON CENTER, UNLESS OTHERWISE NOTED OR SHOWN.
4. DISTANCE FROM END OF REINFORCEMENT TO CONCRETE SURFACES AT ENDS OF WALLS OR TOPS OF WALLS AND TO ICF FORMS AT CORNERS SHALL BE 2 INCHES.
5. REINFORCEMENT SHALL BE CONTINUOUS. SPLICES SHALL OCCUR ONLY WHERE SPECIFICALLY INDICATED ON THE ELEVATIONS.
6. CONCRETE WALLS SHALL BE PLACED MONOLITHICALLY. COLD JOINTS SHALL OCCUR ONLY WHERE SPECIFICALLY INDICATED ON THE ELEVATIONS.
7. ICF WALL HEAVY CONNECTION SHOWN THUS: ▩ – SEE DETAILS ON S-504.

GRAPHIC SCALE

3/16" = 1'-0" 0 4' 8' 12'

SYM	DESCRIPTION	DATE	APPR
5	AMENDMENT 005	03.08.16	BSS

NAVFAC

SEAL

A/E INFO

APPROVED: David W. Dunnfield
FOR COMMANDER NAVFAC

ACTIVITY
MICHELLE YARMER
SATISFACTORY TO DATE 10/23/15
DES BPF DRW BPF CHK WCT
<<PM/DM>> BHD/CAH
BRANCH MANAGER
CHIEF ENG/ARCH DWG
FIRE PROTECTION

DEPARTMENT OF THE NAVY
NAVAL FACILITIES ENGINEERING COMMAND
NAVAL FACILITIES ENGINEERING COMMAND ~ MIDLANT
NAVAL STATION NORFOLK, VA
NORTHEAST IPT
NAVAL SUPPORT ACTIVITY
PHILADELPHIA, PA
P-1501 DLA TROOP SUPPORT HQ FACILITY
ICF WALL ELEVATIONS – AREA C

SCALE: AS NOTED
EPROJECT NO.: 1308282
CONSTR. CONTR. NO. N40085-16-R-3000
NAVFAC DRAWING NO. 12707197
SHEET 183 OF 613
S-209

DRAWFORM REVISION: 10 MARCH 2009

FILE NAME: P:\PA\NSA\WLCON\2015_1308282_P1501_DLA Troop Support HQ Facility\B_Design\Drawings\Sheet Files\07_Structural\BLDG-P1501-1308282-S-209.dwg LAYOUT NAME: S-209 PLOTTED: Tuesday, March 08, 2016 - 12:43pm USER: william.c.thornton

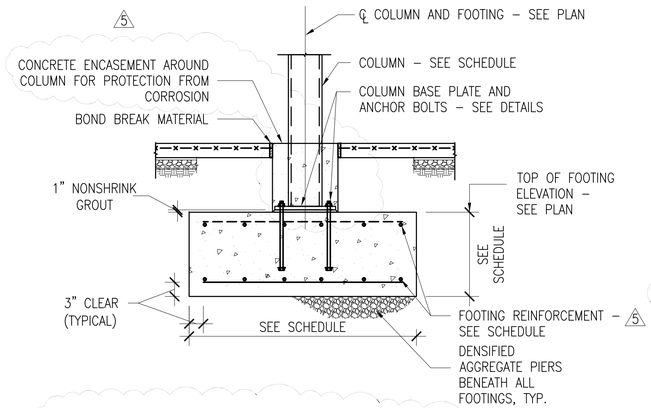

TYPICAL COLUMN FOOTING (NO PIER)

ONLY LOCATED ALONG COLUMN LINE G AND AT GRIDS B8, C8, AND C10 5

COLUMN FOOTING SCHEDULE

MARK	SIZE	THICKNESS	REINFORCING (TOP AND BOTTOM)	
			TRANSVERSE	LONGITUDINAL
CF4.0	4'–0" x 4'–0"	16"	(5)–#4 x 3'–6" BOTTOM	(5)–#4 x 3'–6" BOTTOM
CF5.0	5'–0" x 5'–0"	16"	(5)–#5 x 4'–6" BOTTOM	(5)–#5 x 4'–6" BOTTOM
CF6.0	6'–0" x 6'–0"	20"	(7)–#5 x 5'–6" BOTTOM	(7)–#5 x 5'–6" BOTTOM
CF7.0	7'–0" x 7'–0"	24"	(9)–#5 x 6'–6" BOTTOM	(9)–#5 x 6'–6" BOTTOM
CF9.0	9'–0" x 9'–0"	28"	(13)–#5 x 8'–6" BOTTOM	(13)–#5 x 8'–6" BOTTOM
CF7x18	7'–0" x 18'–0"	28"	(18)–#7 x 6'–6" BOTTOM	(7)–#7 x 17'–6" BOTTOM
CF6X12	6'–0" X 12'–0"	24"	(12)–#5 x 5'–6" BOTTOM	(6)–#5 x 11'–6" BOTTOM

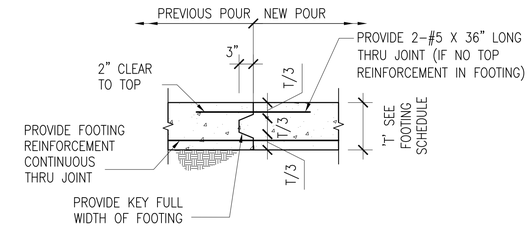

GRADE BEAM CONSTRUCTION JOINT

NOT TO SCALE

GRADE BEAM SCHEDULE

MARK	WIDTH 'W'	THICKNESS 'T'	REINFORCING	
			CONTINUOUS	TIE BARS
GB2.0	2'–0"	20"	(3)–#4 TOP & BOTTOM	#4 AT 4'–0" O/C TOP AND BOTTOM

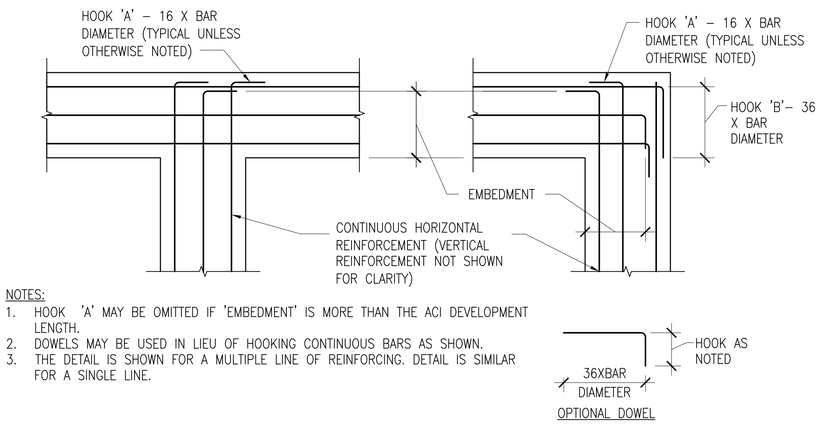

NOTES:

1. HOOK 'A' MAY BE OMITTED IF 'EMBEDMENT' IS MORE THAN THE ACI DEVELOPMENT LENGTH.
2. DOWELS MAY BE USED IN LIEU OF HOOKING CONTINUOUS BARS AS SHOWN.
3. THE DETAIL IS SHOWN FOR A MULTIPLE LINE OF REINFORCING. DETAIL IS SIMILAR FOR A SINGLE LINE.

TYPICAL DETAIL SHOWING CONTINUOUS REINFORCING AT CORNERS AND INTERSECTIONS

NOT TO SCALE

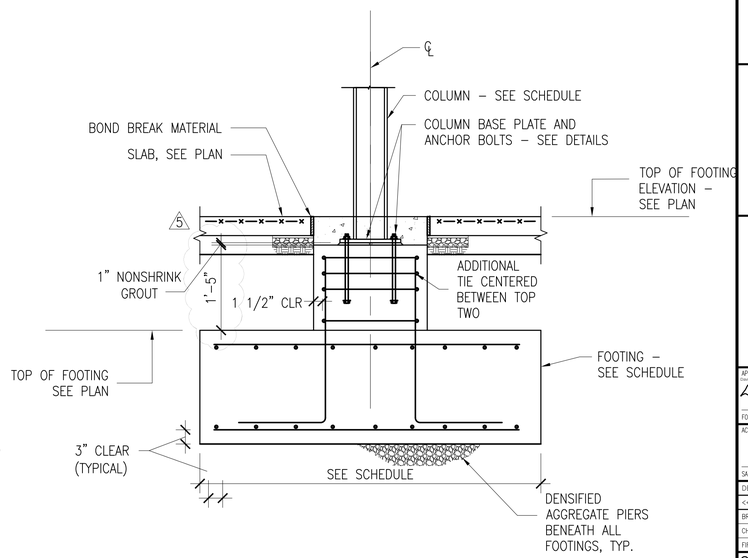

CONCRETE PEDESTAL SCHEDULE

MARK	SIZE	REINFORCING		PLAN VIEW
		CONTINUOUS	TIES	
P–1	22" x 22"	(8)–#5	#4 @ 6" MAX	
P–2	24" x 24"	(8)–#7	#5 @ 6" MAX	

REFER TO COLUMN SCHEDULE ON S–601 FOR PEDESTAL LOCATIONS.

COLUMN WITH PIER DETAIL - TYPICAL UNO

NOT TO SCALE

5

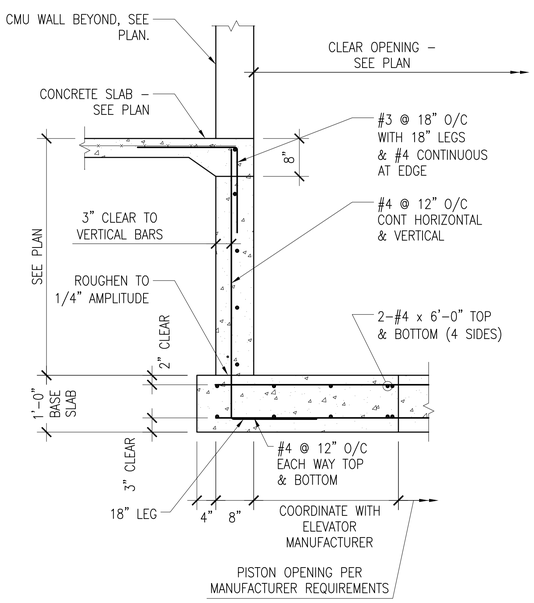

TYPICAL ELEVATOR PIT DETAIL

NOT TO SCALE

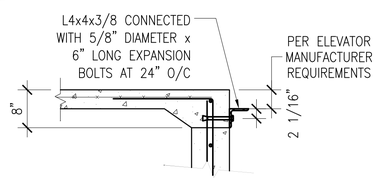

DETAIL AT ELEVATOR DOOR SILL

NOTE: POUR PIT MONOLITHIC WITH BASE SLAB

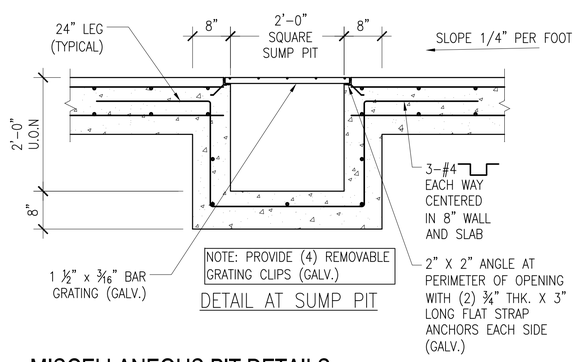

DETAIL AT SUMP PIT

MISCELLANEOUS PIT DETAILS

NOT TO SCALE

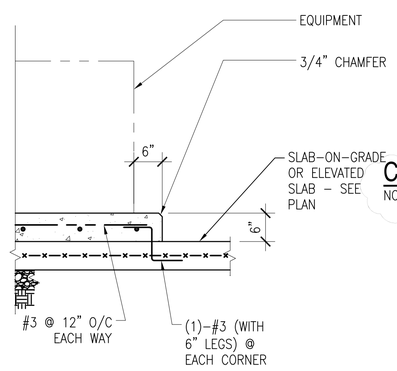

TYPICAL INTERIOR EQUIPMENT PAD DETAIL

NOT TO SCALE

SYM	DESCRIPTION	DATE	APPR
5	AMENDMENT 005	03.08.16	BSS
2	AMENDMENT 002	02.17.16	BSS

NAVFAC

SEAL

A/E INFO

APPROVED: David W. Dunnfield
FOR COMMANDER NAVFAC

ACTIVITY: MICHELLE YARMER

SATISFACTORY TO DATE 10/23/15

DES BPF DRW BPF CHK JMS

<<PM/DM>> BHD/CAH

BRANCH MANAGER Beverly

CHIEF ENG/ARCH DWG

FIRE PROTECTION

DEPARTMENT OF THE NAVY
NAVAL FACILITIES ENGINEERING COMMAND
NORTHEAST IPT
NAVAL FACILITIES ENGINEERING COMMAND ~ MIDLANT
NAVAL STATION NORFOLK, VA
NAVAL SUPPORT ACTIVITY PHILADELPHIA, PA
P-1501 DLA TROOP SUPPORT HQ FACILITY
TYPICAL FOUNDATION DETAILS

SCALE: AS NOTED

EPROJECT NO.: 1308282

CONSTR. CONTR. NO. N40085–16–R–3000

NAVFAC DRAWING NO. 12707204

SHEET 190 OF 613

S-501

DRAWFORM REVISION: 10 MARCH 2009

FILE NAME: P:\PAVNSA\MILCON\2015_1308282_P1501_DLA Troop Support HQ Facility\B_Design\Drawings\Sheet Files\07_Structural\BLDG-P1501-1308282-S-501.dwg LAYOUT NAME: S-501 PLOTTED: Tuesday, March 08, 2016 – 1:20pm USER: william.c.thornton

COLUMN SCHEDULE

	A-2 A-3 A-4 A-6 A-15 A-17 A-18	A-20 A-5 A-5.8 A-16 A-19 A-15.3 A-19.6	B-1 B-21 C-1 C-21	B-2 B-6 B-15 B-20 B-21	E-2 E-6 F-5 F-5.8 F-16 F-19	E-15 E-20 F-2 F-3 F-4 F-6 F-15	F-15.3 F-17 F-18 F-19.6 F-20	B-3 B-4 B-5 B-16 B-17 B-18 B-19	C-1 C-2 C-6 C-15 C-20 D-2 D-6	D-15 D-20	C-3 C-4 C-17 C-18 D-3 D-4 D-17	D-18	C-5 C-16 C-19 D-5 D-16 D-19	AA-7 AA-14 D-7 B.8-14	B.1-10 B.1-14 C-12	A.9-7 A.9-14	A.9-8 C.3-14 D.9-12.6 E.5-13 G-14	C-7 G-7 D.5-14 E.4-7	C-8 C-11 D-9	C-10	D-11 E.4-9	D.8-13	E.1-14 G-9	E.4-12 G-12 G-13	AB-6.6 AB-8.8
PENTHOUSE ROOF EL																									
TOS = +64'-0" T/ SCREEN WALL EL															HSS 4x4x1/4										
TOS = +63'-4" MAIN ROOF EL																HSS 8x8x3/8									
TOS = +53'-0" @ AREAS A & C; TOS = +53'-8" @ AREA B 4TH FLOOR EL		5	W12X136		W12X136			W14x48	W12X136		W12X120		W12X120	HSS 8x8x3/8		HSS 8x8x3/8	HSS 8x8x3/8	HSS 8x8x3/8	W8x31	W8x31	HSS 8x8x3/8		W12x120	HSS 8x8x3/8	
TOS = +39'-8" ℄ COLUMN SPLICE 4'-4" 3RD FLOOR EL	W12X136																					HSS 8x8x3/8			
TOS = +26'-4" COLUMN SPLICE (TYP) 2ND FLOOR EL	W12X136		W12X136	5	W12X136				W12X136		W12X120		W12X120	HSS 8x8x3/8		HSS 8x8x3/8	HSS 8x8x3/8	HSS 8x8x3/8	W8x31	W8x31	HSS 8x8x3/8	HSS 8x8x3/8	W12X120	HSS 8x8x3/8	
TOS = +13'-0" VESTIBULE ROOF EL																									
TOS = +10'-10" BASE PLATE (TYP) 1ST FLOOR EL T/SLAB = +0'-0"																									HSS 6x6x1/4
BASE PLATE	1"X18X18	1"X18X18		1"X18X18				1"X18X18	1"X18X18		1"X18X18		1"X18X18	1"X18X18		1"X16X16	1"X16X16	1"X16X16	1"X16X16	1"X16X16	1"X16X16	1"X16X16	1"X18X18	1"X16X16	1"X16X16
ANCHOR RODS	4-1"ø	4-1"ø		4-1"ø				4-1"ø	4-1"ø		4-1"ø		4-1"ø	4-1"ø		4-7/8"ø	4-7/8"ø	4-7/8"ø	4-7/8"ø	4-7/8"ø	4-7/8"ø	4-7/8"ø	4-1"ø	4-7/8"ø	4-7/8"ø
PIER TYPE	P-2	P-2		P-2				P-2	P-2		P-2		P-2	P-2		P-1	P-1	P-1	P-1	P-1	P-1	P-1	P-2	P-1	P-1

5

NOTES:

1. TOP OF STEEL ELEVATIONS REFER TO THE TOP OF STEEL PLANE FOR A PARTICULAR LEVEL. TOP OF STEEL FOR COLUMNS VARIES DEPENDING ON WHETHER BEAMS FRAME INTO THE SIDES OR CANTILEVER BEYOND COLUMNS.
2. REFER TO SHEET S-501 FOR TYPICAL COLUMN FOUNDATION DETAIL.. REFER TO S-503 FOR TYPICAL COLUMN SPLICE DETAILS. CHANGES IN SPLICE LOCATIONS SHALL BE APPROVED BY THE CONTRACTING OFFICER,
3. TOS ELEVATIONS SHOWN ARE FOR TOP OF BEAMS AND GIRDERS.
4. REFER TO SHEET S-501 FOR PIER SCHEDULE AND DETAILS.
5. SEE "TYPICAL COLUMN FOOTING DETAIL (NO PIER)" ON S-501 FOR PIER REQUIREMENTS. 5

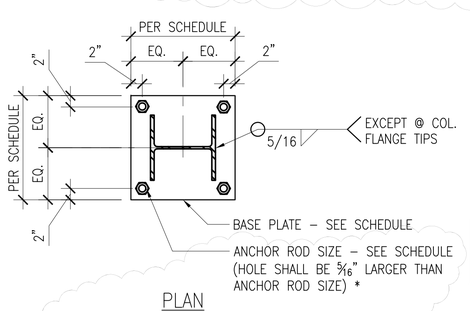

ALL BASE PLATE HOLED SHALL BE DRILLED. NO TORCH CUTTING OR GRINDING ALLOWED.

* NOTE: PROVIDE 3/8"THK X3" WASHER AND STANDARD NUT FOR EACH ANCHOR ROD

5

COLUMN BASE PLATE DETAIL 'A'

NOT TO SCALE

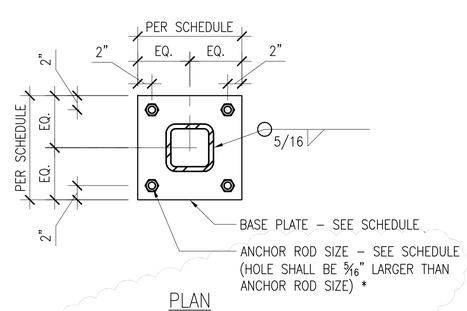

* NOTE: PROVIDE 3/8"THK X3" WASHER AND STANDARD NUT FOR EACH ANCHOR ROD

5

COLUMN BASE PLATE DETAIL 'B'

NOT TO SCALE

5

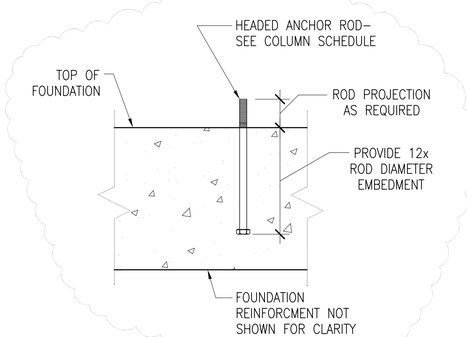

TYPICAL ANCHOR BOLT DETAIL

NOT TO SCALE

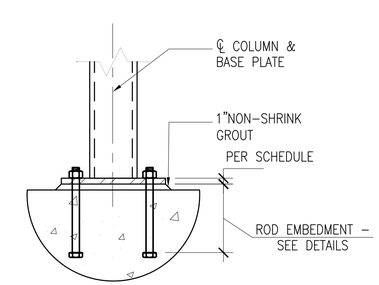

ELEVATION

H.S.S. COLUMN SHOWN, WIDE FLANGE COLUMN SIMILAR.

SYM	DESCRIPTION	DATE	APPR
5	AMENDMENT 005	03.08.16	BSS

NAVFAC

SEAL

A/E INFO

APPROVED
David W. Drumfield
FOR COMMANDER NAVFAC

ACTIVITY
MICHELLE YARMER

SATISFACTORY TO DATE 10/23/15

DES BPF DRW BPF CHK WCT

<<PM/DM>> BHD/CAH

BRANCH MANAGER Bonetti

CHIEF ENG/ARCH DWG

FIRE PROTECTION

DEPARTMENT OF THE NAVY
NAVAL FACILITIES ENGINEERING COMMAND ~ MIDLANT
NAVAL STATION NORFOLK, VA
NORTHEAST IPT
NAVAL SUPPORT ACTIVITY
PHILADELPHIA, PA

NAVAL FACILITIES ENGINEERING COMMAND

P-1501 DLA TROOP SUPPORT HQ FACILITY

COLUMN SCHEDULE

SCALE: AS NOTED

EPROJECT NO. 1308282

CONSTR. CONTR. NO. N40085-16-R-3000

NAVFAC DRAWING NO. 12707208

SHEET 194 OF 613

S-601

DRAWFORM REVISION: 10 MARCH 2009

FILE NAME: P:\PA\WSA\WILCON\2015_1308282_P1501_DLA Troop Support HQ Facility\B_Design\Drawings\Sheet Files\07_Structure\BLDG-P1501-1308282-S-601.dwg LAYOUT NAME: S-601 PLOTTED: Tuesday, March 08, 2016 - 2:07pm USER: william.c.thornton