APPENDIX A

Government Provided Subsurface Data & Test Reports

The enclosed subsurface information is considered for information only and is not guaranteed to fully or accurately represent all existing conditions. The Government shall not be responsible for any interpretation or conclusion drawn by the Contractor from the data or information provided.

Any report accompanying the subsurface information is provided only to better convey data (boring logs, testing, etc.) or to document observed site conditions. The assumptions, analysis, and recommendations of any accompanying report were developed for preliminary planning purposes only and may not reflect present project requirements. Minor variations in subsurface conditions between borings and reported groundwater conditions should be expected.

INDEX

Pavement Core Photos

Utility Locating Test Holes Field Data Records

Test Pit Excavation Photos

Geophysical Study Report

Analytical Report

PHOTOGRAPH 1

DESCRIPTION:

Asphalt core taken at Test Boring Location B-4

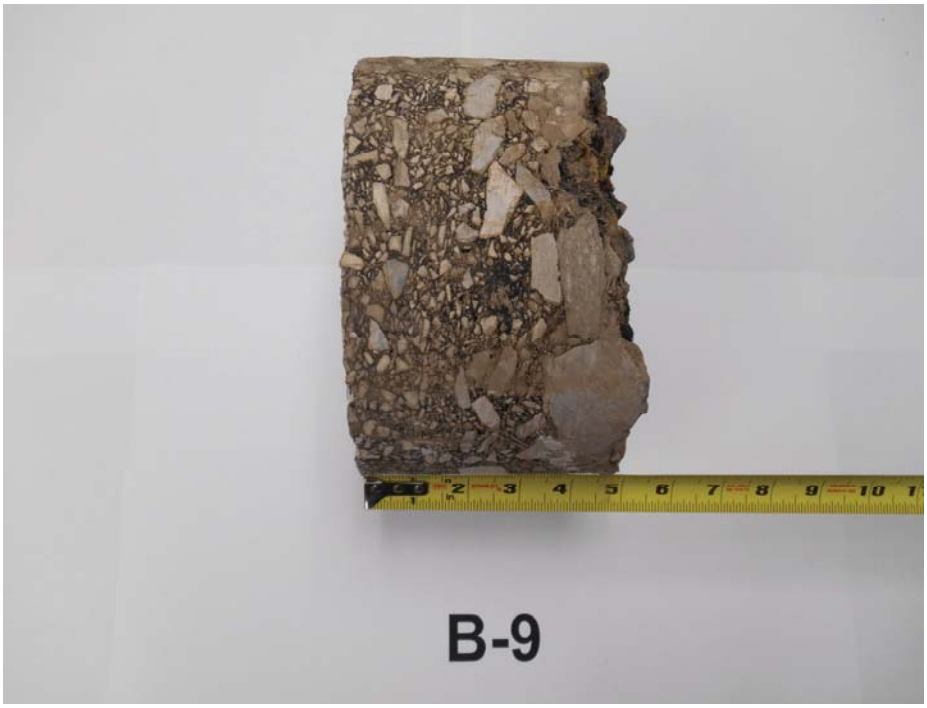

PHOTOGRAPH 2

DESCRIPTION:

Asphalt core taken at Test Boring Location B-9

Schnabel ENGINEERING	**NAVFAC - NSA** **700 Robbins Street** **Philadelphia, Pennsylvania** **PROJECT NO. 13615018**	**Photographs of** **Asphalt Cores** **September 7, 2013**

© Schnabel Engineering 2013 All Rights Reserved

PHOTOGRAPH 3

DESCRIPTION:

Asphalt core taken at Test Boring Location B-10

PHOTOGRAPH 4

DESCRIPTION:

Asphalt core taken at Test Boring Location B-13

Schnabel ENGINEERING	**NAVFAC - NSA** **700 Robbins Street** **Philadelphia, Pennsylvania** **PROJECT NO. 13615018**	**Photographs of** **Asphalt Cores** **September 7, 2013**

© Schnabel Engineering 2013 All Rights Reserved

PHOTOGRAPH 5

DESCRIPTION:

Asphalt core taken at Test Boring Location B-14

Schnabel ENGINEERING	**NAVFAC - NSA** **700 Robbins Street** **Philadelphia, Pennsylvania** **PROJECT NO. 13615018**	**Photographs of** **Asphalt Cores** **September 7, 2013**

© Schnabel Engineering 2013 All Rights Reserved

Utility Locating Test Holes
Field Data Records
16 October 2014

DLA Troop Support Headquarters Facility
NSA Northeast Philadelphia
Philadelphia, PA

eProjects No.: 1308282

Contract No. N40085-11-D-7211

Delivery Order No.: 0019

By

STV Incorporated
205 West Welsh Drive
Douglassville, PA 19518

STV Project No. 3016346

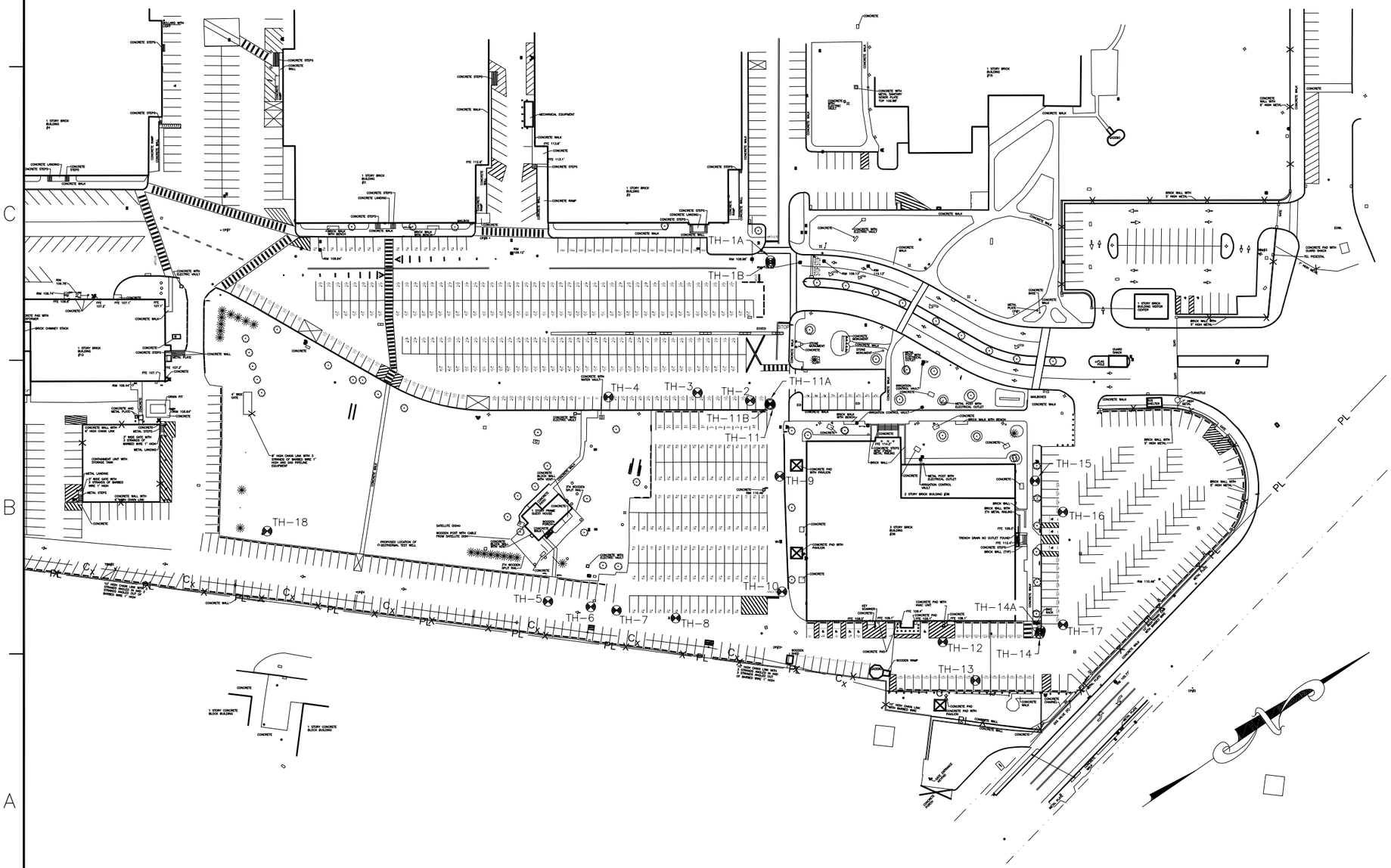

TEST HOLE LOCATION SUMMARY		
TEST HOLE #	NORTHING	EASTING
TH-1A	269725.0290	2712931.9377
TH-1B	269723.7572	2712933.9850
TH-2	269624.9871	2713040.9179
TH-3	269584.1162	2713003.0154
TH-4	269504.4815	2712954.2987
TH-5	269331.6632	2713095.5857
TH-6	269365.4994	2713125.4896
TH-7	269385.7331	2713143.7013
TH-8	269432.3963	2713185.3156
TH-9	269539.8906	2713225.1498
TH-10	269605.9291	2713123.7975
TH-11	269640.3481	2713056.5157
TH-11A	269640.5496	2713054.9684
TH-11B	269639.5805	2713055.5860
TH-12	269649.4181	2713363.2844
TH-13	269654.9890	2713415.9385
TH-14	269738.1052	2713413.4239
TH-14A	269740.6753	2713411.2982
TH-15	269824.1675	2713278.2415
TH-16	269829.9398	2713321.6872
TH-17	269763.5588	2713419.3490
TH-18	269130.2124	2712869.2544

SYM	DESCRIPTION	DATE	APPR

NAVFAC

SEAL

A/E INFO

APPROVED

FOR COMMANDER NAVFAC

ACTIVITY

XXXXX

SATISFACTORY TO DATE MM/DD/YY

DES | DRW | CHK

<<PM/DM>> BD NW

BRANCH MANAGER DWG

CHIEF ENG/ARCH XXX

FIRE PROTECTION XX

DEPARTMENT OF THE NAVY
NAVAL FACILITIES ENGINEERING COMMAND
NORTHEAST IPT
NAVAL FACILITIES ENGINEERING COMMAND ~ MIDLANT
NAVAL SUPPORT ACTIVITY
NAVAL STATION NORFOLK, VA
PHILADELPHIA, PA

P-1501 DLA TROOP SUPPORT HQ FACILITY

TEST PIT LOCATION PLAN

SCALE: 1"=60'

EPROJECT NO.: 1308282

CONSTR. CONTR. NO. #####-#-#-####

NAVFAC DRAWING NO. #

SHEET 1 OF 1

DRAWFORM REVISION: 10 MARCH 2009

Project Name:	DLA Troop Support	TBE Office:	Burlington, NJ
Project Number:	PA08200101	Crew Leader:	Caruso
Test Hole Date:	10-01-14	SUE Crew:	Caruso/Conticchio
City-State:	Philadelphia, PA	Truck No:	55-402
Location:	DLA Troop Support HQ	Units:	☑English ☐Metric

Cardno TBE
Shaping the Future

Subsurface Utility Engineering
Test Hole Field Data

TEST HOLE:	1A	SURFACE ELEVATION:	108.86
IDENTIFIED BY:	Nail/Disk	SURFACE TYPE:	Asphalt
		SURFACE THICKNESS:	7.50"
		ROAD BASE THICKNESS:	8.00"
MANUAL DEPTH (TOP):	5.00'	UTILITY REQUESTED:	Water
TOP OF UTILITY ELEVATION:	103.86	UTILITY FOUND:	Water
		UTILITY SIZE:	10.00"
		UTILITY MATERIAL:	Ductile Iron Pipe
		SOIL CONDITIONS:	Compacted, Dry

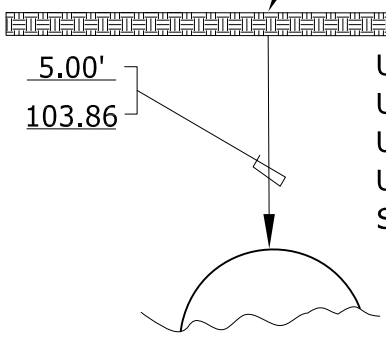

PROFILE VIEW - NOT TO SCALE

Note: Reference pin set over crown of pipe. Road base consists of compacted stone.

BEP = Building Entry Point; EOI = End of Information; EORI = End of Records Information; EOWL = End of Work Limit

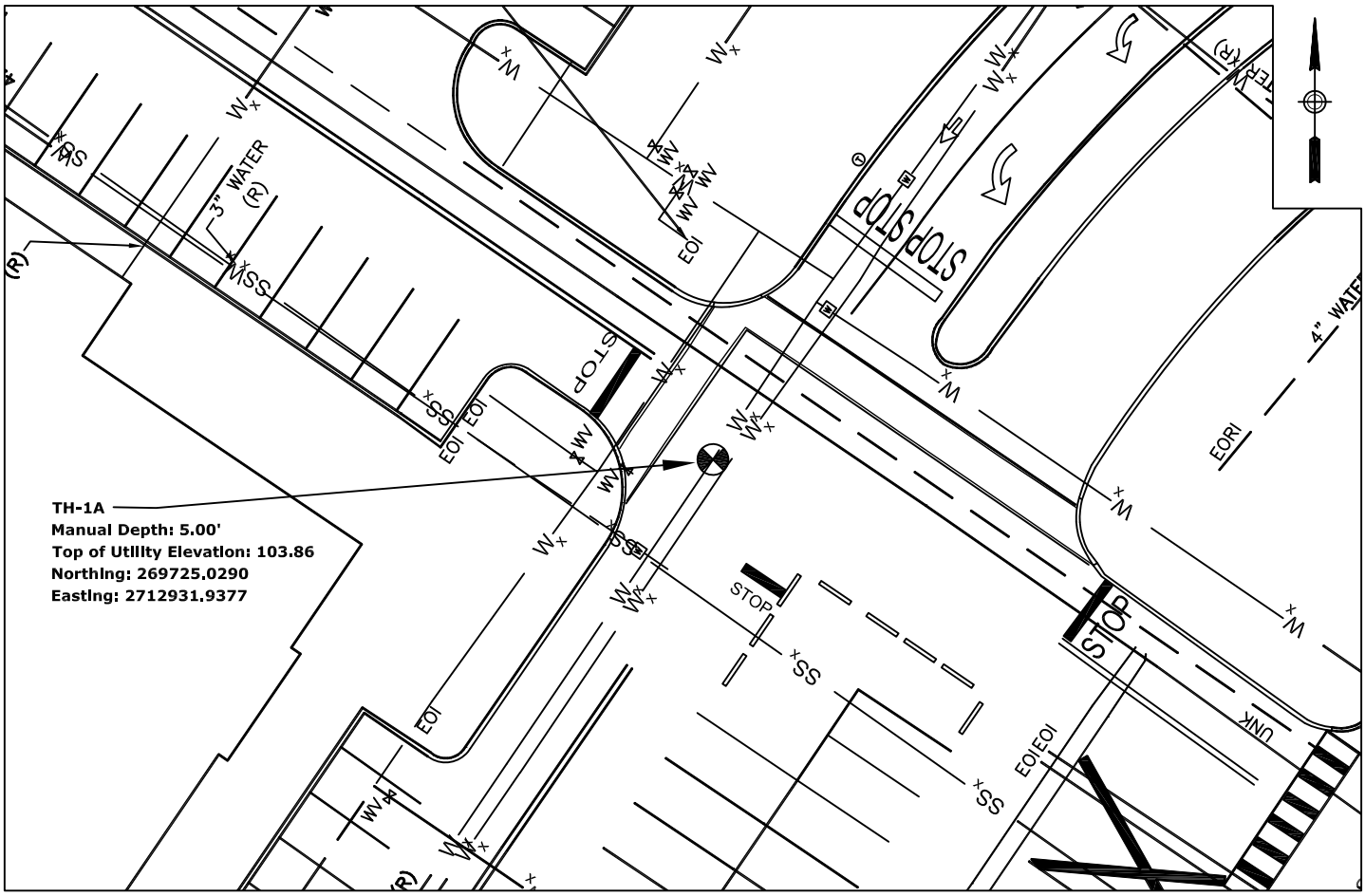

PLAN VIEW - NOT TO SCALE

SURVEYOR: Dawood PREPARED BY: Tony Harris CHECKED BY: Steve Myers

Test Hole 1A Photo 1

Test Hole 1A Photo 2

Test Hole 1A Photo 3

Test Hole 1A Photo 4

Project Name:	DLA Troop Support	TBE Office:	Burlington, NJ
Project Number:	PA08200101	Crew Leader:	Caruso
Test Hole Date:	10-01-14	SUE Crew:	Caruso/Conticchio
City-State:	Philadelphia, PA	Truck No:	55-402
Location:	DLA Troop Support HQ	Units:	☑English ☐Metric

Cardno TBE
Shaping the Future

Subsurface Utility Engineering
Test Hole Field Data

TEST HOLE:	1B	SURFACE ELEVATION:	108.82
IDENTIFIED BY:	Nail/Disk	SURFACE TYPE:	Asphalt
		SURFACE THICKNESS:	7.50"
		ROAD BASE THICKNESS:	8.00"
MANUAL DEPTH (TOP):	5.55'	UTILITY REQUESTED:	Water
TOP OF UTILITY ELEVATION:	103.27	UTILITY FOUND:	Water
		UTILITY SIZE:	6.00"
		UTILITY MATERIAL:	Ductile Iron Pipe
		SOIL CONDITIONS:	Compacted, Dry

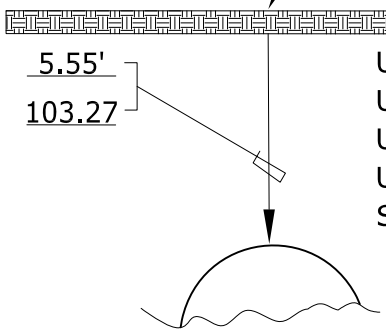

PROFILE VIEW - NOT TO SCALE

Note: Reference pin set over crown of pipe. Road base consists of compacted stone.

BEP = Building Entry Point; EOI = End of Information; EORI = End of Records Information; EOWL = End of Work Limit

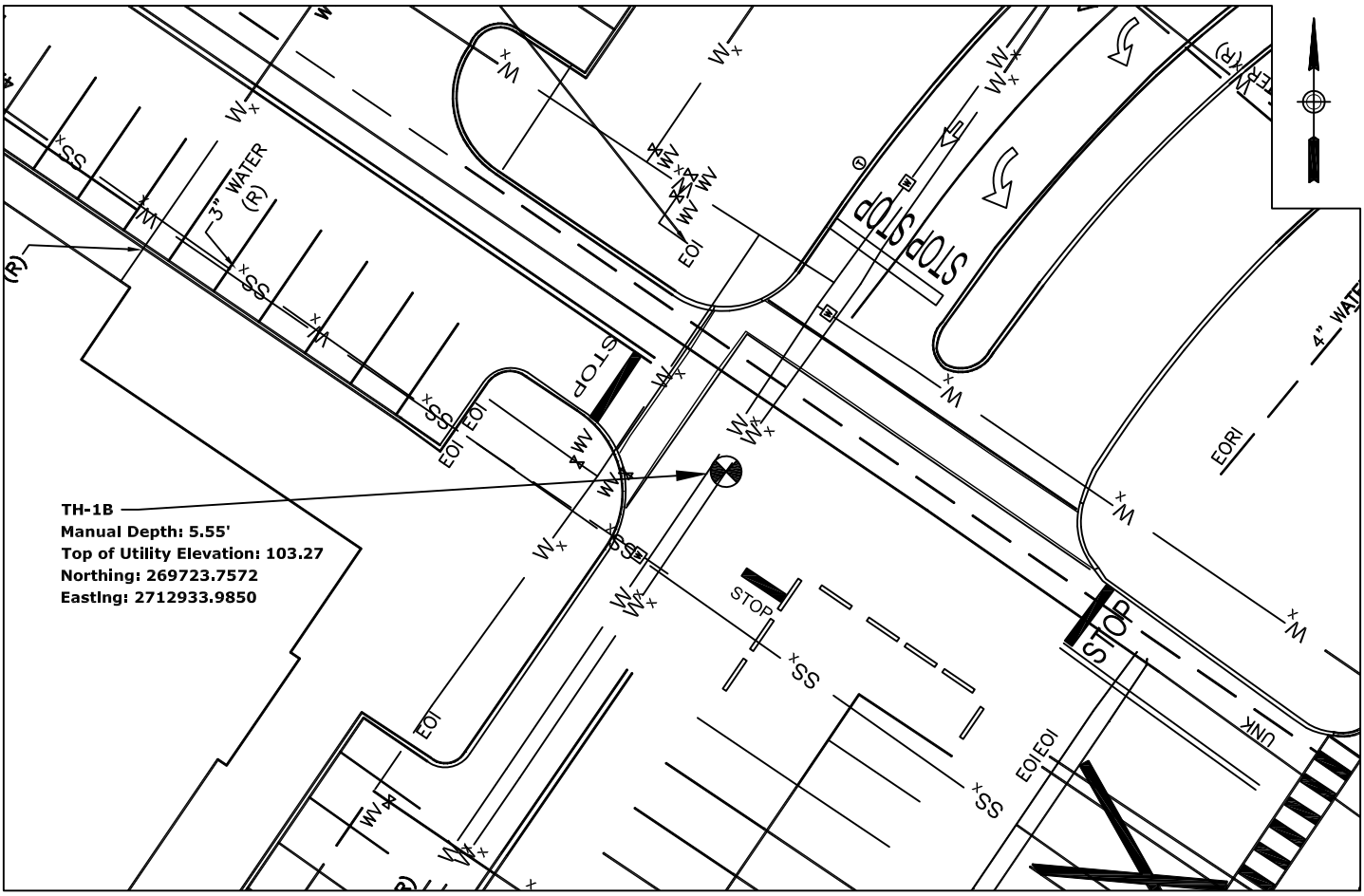

PLAN VIEW - NOT TO SCALE

SURVEYOR: Dawood PREPARED BY: Tony Harris CHECKED BY: Steve Myers

Test Hole 1B Photo 1

Test Hole 1B Photo 2

Test Hole 1B Photo 3

Test Hole 1B Photo 4

Project Name:	DLA Troop Support	TBE Office:	Burlington, NJ
Project Number:	PA08200101	Crew Leader:	Caruso
Test Hole Date:	9-23-14	SUE Crew:	Caruso/Conticchio
City-State:	Philadelphia, PA	Truck No:	55-402
Location:	DLA Troop Support HQ	Units:	☑English ☐Metric

Cardno TBE
Shaping the Future

Subsurface Utility Engineering
Test Hole Field Data

TEST HOLE:	2	SURFACE ELEVATION:	109.69
IDENTIFIED BY:	Nail/Disk	SURFACE TYPE:	Asphalt
		SURFACE THICKNESS:	3.00"
		ROAD BASE THICKNESS:	5.00"
MANUAL DEPTH (TOP):	3.08'	UTILITY REQUESTED:	Water
TOP OF UTILITY ELEVATION:	106.61	UTILITY FOUND:	Water
		UTILITY SIZE:	8.00"
		UTILITY MATERIAL:	Ductile Iron Pipe
		SOIL CONDITIONS:	Loose, Moist, Clay

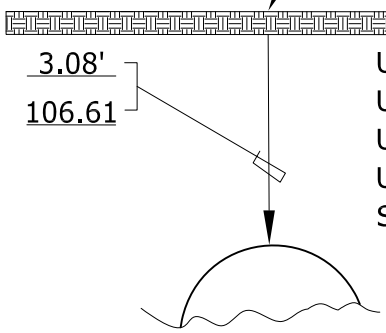

PROFILE VIEW - NOT TO SCALE

Note: Reference pin set over crown of pipe. Pipe coated with tar like material. Road base consists of a concrete.

BEP = Building Entry Point; EOI = End of Information; EORI = End of Records Information; EOWL = End of Work Limit

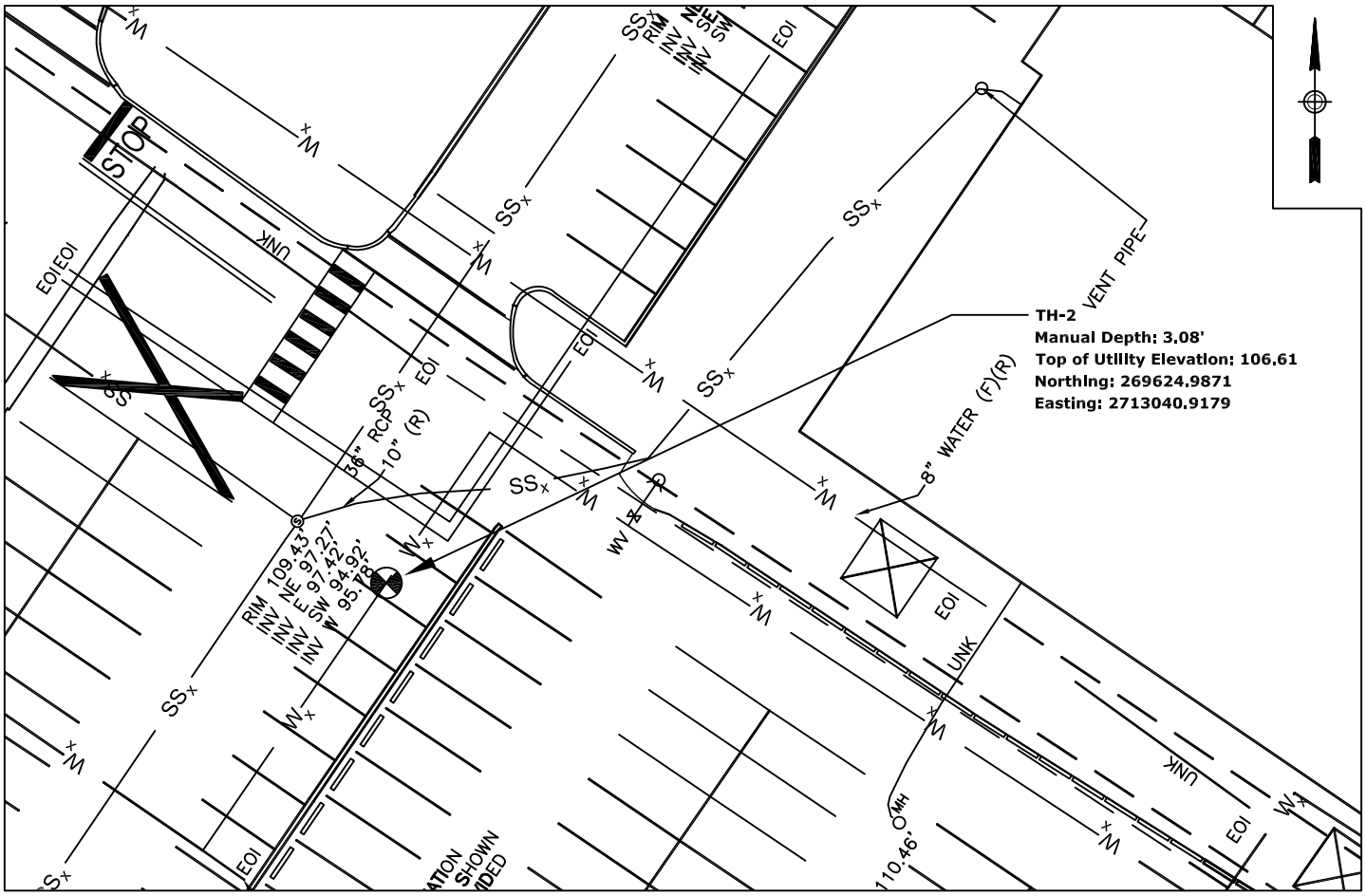

PLAN VIEW - NOT TO SCALE

SURVEYOR: Dawood PREPARED BY: Tony Harris CHECKED BY: Steve Myers

Test Hole 2 Photo 1

Test Hole 2 Photo 2

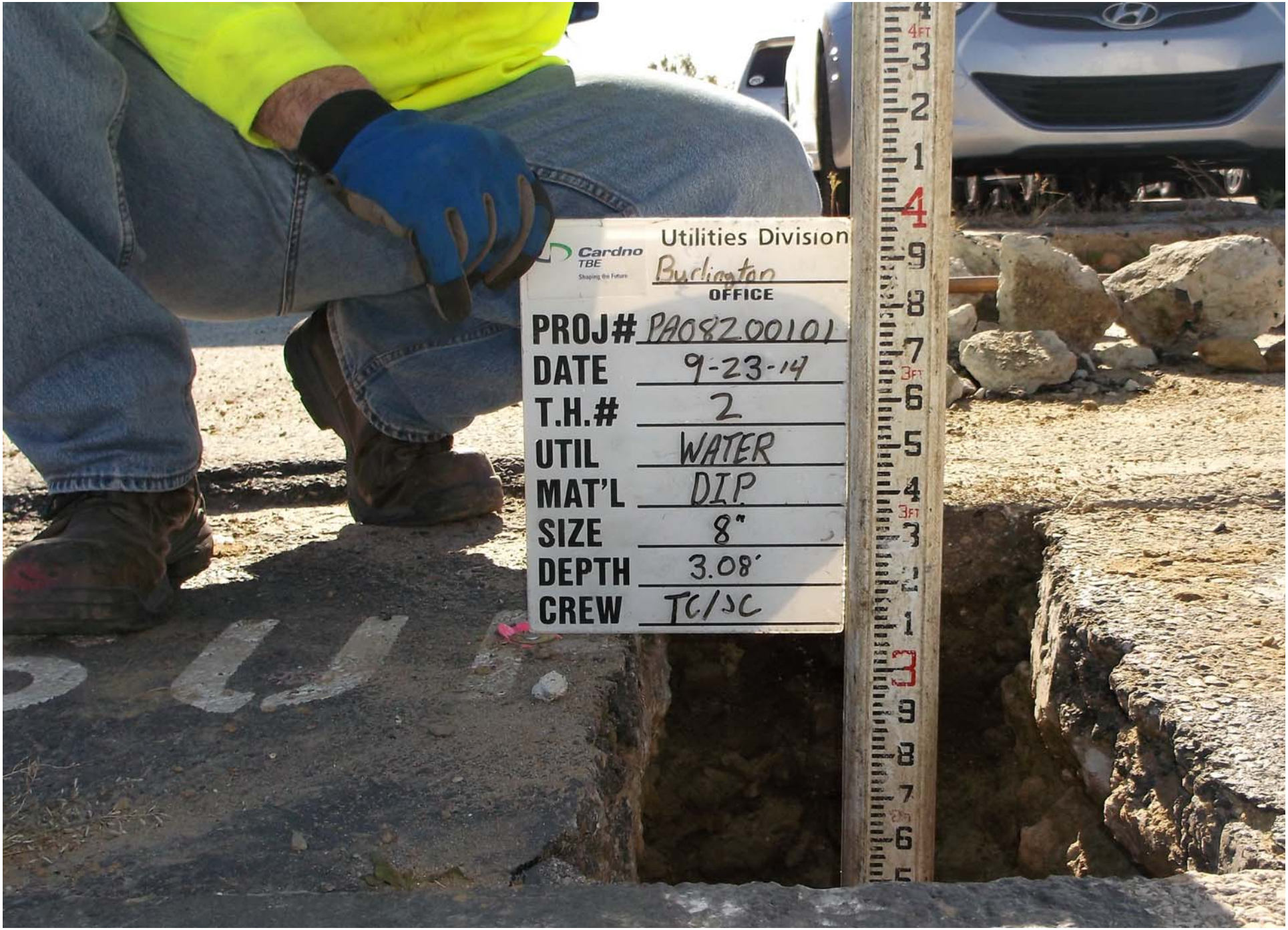

Test Hole 2 Photo 3

Test Hole 2 Photo 4

Project Name: DLA Troop Support
Project Number: PA08200101
Test Hole Date: 9-23-14
City-State: Philadelphia, PA
Location: DLA Troop Support HQ

Cardno TBE
Shaping the Future

Subsurface Utility Engineering
Test Hole Field Data

TBE Office: Burlington, NJ
Crew Leader: Caruso
SUE Crew: Caruso/Conticchio
Truck No: 55-402
Units: ☑English ☐Metric

TEST HOLE: 3
IDENTIFIED BY: Nail/Disk

SURFACE ELEVATION: 109.54
SURFACE TYPE: Asphalt
SURFACE THICKNESS: 3.50"
ROAD BASE THICKNESS: 12.50"

MANUAL DEPTH (TOP): 3.62'
TOP OF UTILITY ELEVATION: 105.92

UTILITY REQUESTED: Water
UTILITY FOUND: Water
UTILITY SIZE: 8.00"
UTILITY MATERIAL: Ductile Iron Pipe
SOIL CONDITIONS: Loose, Moist, Clay

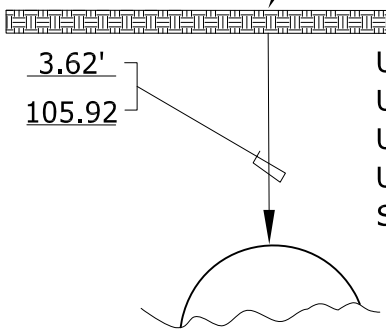

PROFILE VIEW - NOT TO SCALE

Note: Reference pin set over crown of pipe. Pipe is coated with tar like material. Road base consists of concrete.

BEP = Building Entry Point; EOI = End of Information; EORI = End of Records Information; EOWL = End of Work Limit

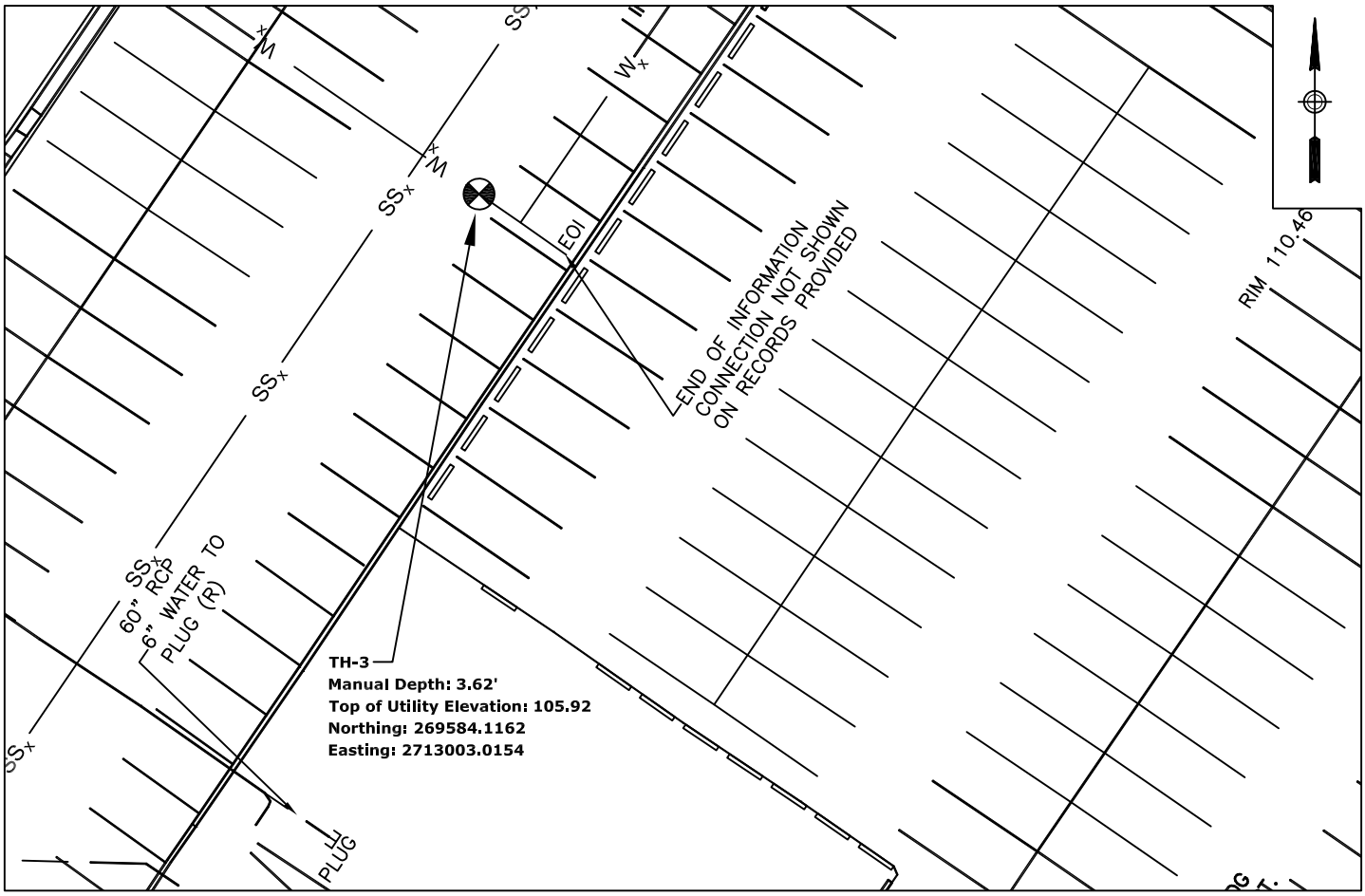

PLAN VIEW - NOT TO SCALE

SURVEYOR: Dawood PREPARED BY: Tony Harris CHECKED BY: Steve Myers

Test Hole 3 Photo 1

Test Hole 3 Photo 2

Test Hole 3 Photo 3

Test Hole 3 Photo 4

Project Name:	DLA Troop Support	TBE Office:	Burlington, NJ
Project Number:	PA08200101	Crew Leader:	Caruso
Test Hole Date:	9-23-14	SUE Crew:	Caruso/Conticchio
City-State:	Philadelphia, PA	Truck No:	55-402
Location:	DLA Troop Support HQ	Units:	☑English ☐Metric

Cardno TBE
Shaping the Future

Subsurface Utility Engineering
Test Hole Field Data

TEST HOLE: 4
IDENTIFIED BY: Nail/Disk

SURFACE ELEVATION: 109.43
SURFACE TYPE: Asphalt
SURFACE THICKNESS: 6.00"
ROAD BASE THICKNESS: 9.00"

MANUAL DEPTH (TOP): 4.07'
TOP OF UTILITY ELEVATION: 105.36

UTILITY REQUESTED: Water
UTILITY FOUND: Water
UTILITY SIZE: 6.00"
UTILITY MATERIAL: Ductile Iron Pipe
SOIL CONDITIONS: Moist, Clay, Compact

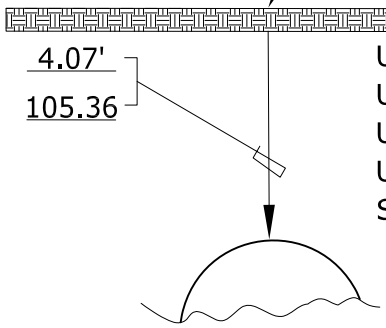

PROFILE VIEW - NOT TO SCALE

Note: Reference pin set over crown of pipe. Road base consists of compacted stone.

BEP = Building Entry Point; EOI = End of Information; EORI = End of Records Information; EOWL = End of Work Limit

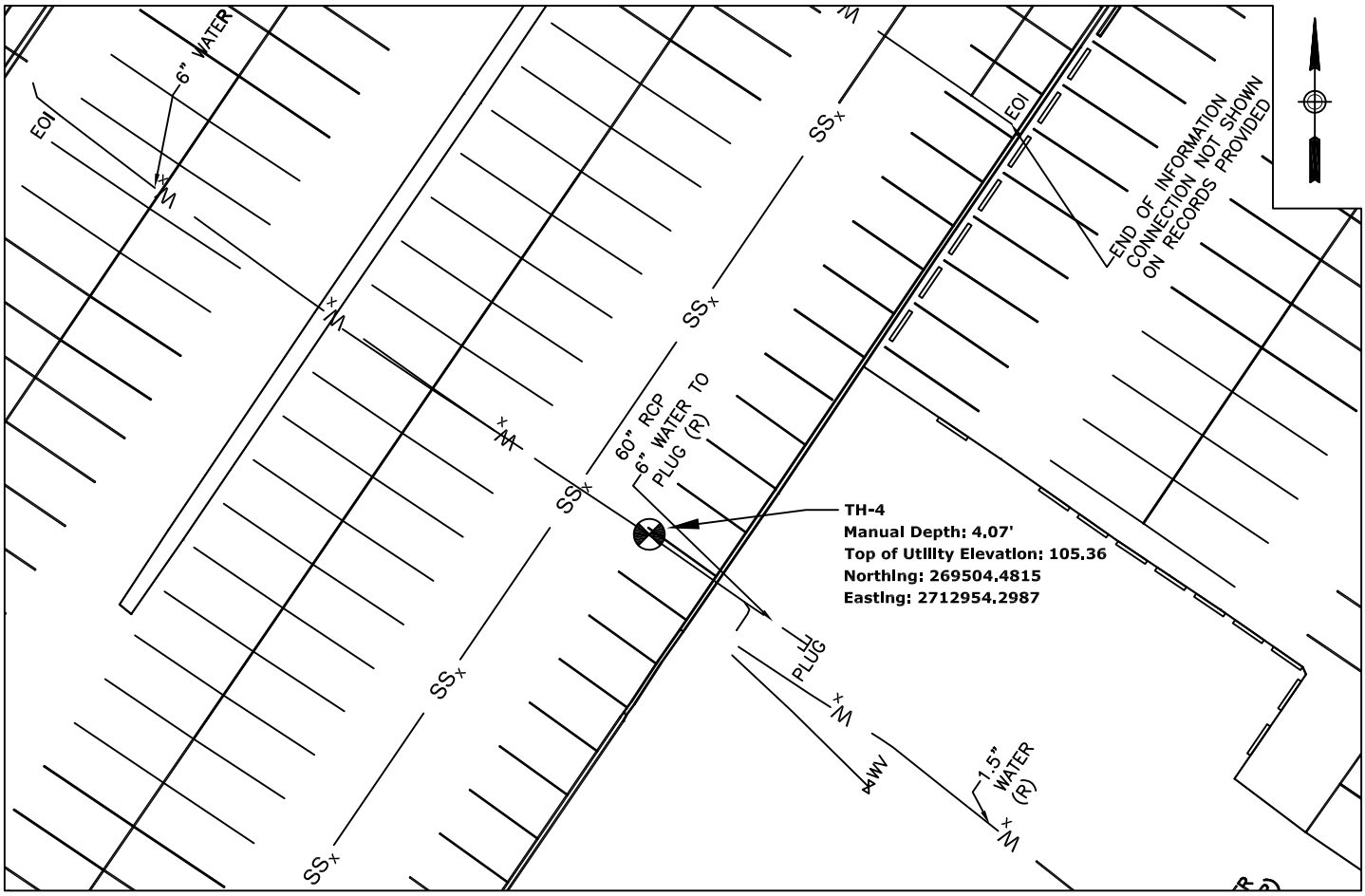

PLAN VIEW - NOT TO SCALE

SURVEYOR: Dawood PREPARED BY: Tony Harris CHECKED BY: Steve Myers

Test Hole 4 Photo 1

Test Hole 4 Photo 2

Test Hole 4 Photo 3

Test Hole 4 Photo 4

Project Name:	DLA Troop Support	TBE Office:	Burlington, NJ
Project Number:	PA08200101	Crew Leader:	Caruso
Test Hole Date:	9-22-14	SUE Crew:	Caruso/Conticchio
City-State:	Philadelphia, PA	Truck No:	55-402
Location:	DLA Troop Support HQ	Units:	☑English ☐Metric

Cardno TBE
Shaping the Future

Subsurface Utility Engineering
Test Hole Field Data

TEST HOLE: 5
IDENTIFIED BY: Nail/Disk

SURFACE ELEVATION: 107.26
SURFACE TYPE: Asphalt
SURFACE THICKNESS: 6.50"
ROAD BASE THICKNESS: 4.25"

MANUAL DEPTH (TOP): 3.64'
TOP OF UTILITY ELEVATION: 103.62

UTILITY REQUESTED: Gas
UTILITY FOUND: Gas
UTILITY SIZE: 6.00"
UTILITY MATERIAL: Steel
SOIL CONDITIONS: Dry, Compacted, Clay

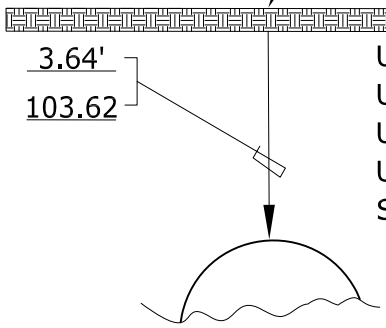

PROFILE VIEW - NOT TO SCALE

Note: Reference pin set over crown of pipe. Road base consists of compacted stone.

BEP = Building Entry Point; EOI = End of Information; EORI = End of Records Information; EOWL = End of Work Limit

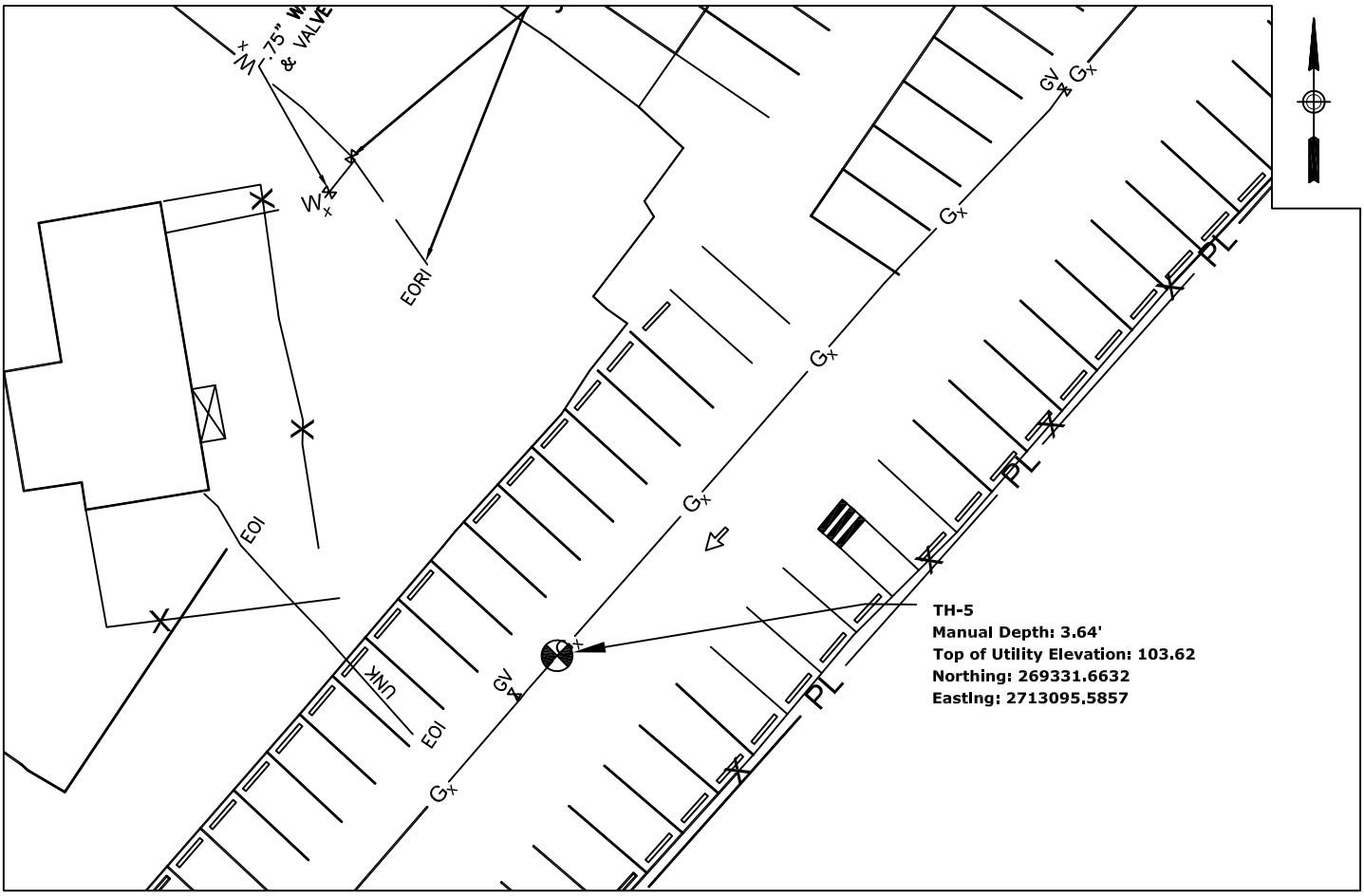

PLAN VIEW - NOT TO SCALE

SURVEYOR: Dawood PREPARED BY: Tony Harris CHECKED BY: Steve Myers

Test Hole 5 Photo 1

Test Hole 5 Photo 2

Test Hole 5 Photo 3

Test Hole 5 Photo 4

Project Name: DLA Troop Support
Project Number: PA08200101
Test Hole Date: 9-22-14
City-State: Philadelphia, PA
Location: DLA Troop Support HQ

Cardno TBE
Shaping the Future

Subsurface Utility Engineering
Test Hole Field Data

TBE Office: Burlington, NJ
Crew Leader: Caruso
SUE Crew: Caruso/Conticchio
Truck No: 55-402
Units: ☑English ☐Metric

TEST HOLE: 6
IDENTIFIED BY: Nail/Disk

SURFACE ELEVATION: 107.16
SURFACE TYPE: Asphalt
SURFACE THICKNESS: 7.00"
ROAD BASE THICKNESS: 8.00"

MANUAL DEPTH (TOP): 3.80'
TOP OF UTILITY ELEVATION: 103.36

UTILITY REQUESTED: Gas
UTILITY FOUND: Gas
UTILITY SIZE: 6.00"
UTILITY MATERIAL: Steel
SOIL CONDITIONS: Dry, Compacted, Clay

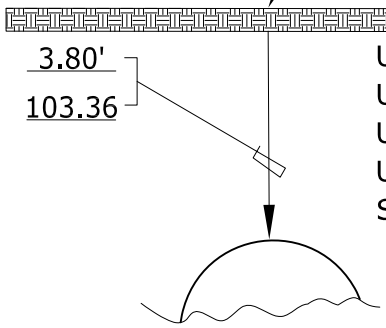

PROFILE VIEW - NOT TO SCALE

Note: Reference pin set over crown of pipe. Road base consists of stone and clay.

BEP = Building Entry Point; EOI = End of Information; EORI = End of Records Information; EOWL = End of Work Limit

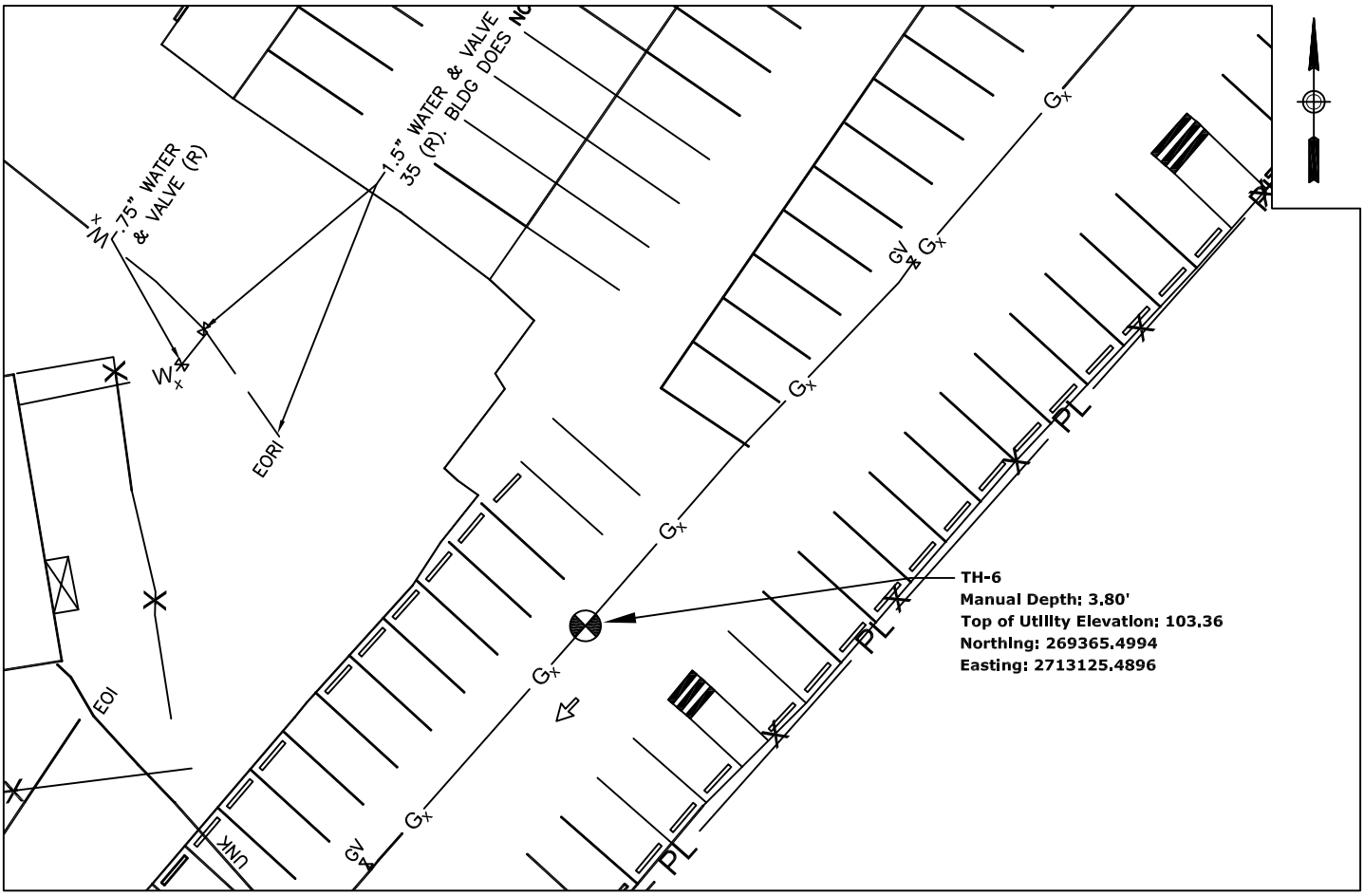

PLAN VIEW - NOT TO SCALE

SURVEYOR: Dawood PREPARED BY: Tony Harris CHECKED BY: Steve Myers

Test Hole 6 Photo 1

Test Hole 6 Photo 2

Test Hole 6 Photo 3

Test Hole 6 Photo 4

Project Name:	DLA Troop Support	TBE Office:	Burlington, NJ
Project Number:	PA08200101	Crew Leader:	Caruso
Test Hole Date:	10-02-14	SUE Crew:	Caruso/Conticchio
City-State:	Philadelphia, PA	Truck No:	55-402
Location:	DLA Troop Support HQ	Units:	☑English ☐Metric

Cardno TBE
Shaping the Future

Subsurface Utility Engineering
Test Hole Field Data

TEST HOLE:	7	SURFACE ELEVATION:	107.51
IDENTIFIED BY:	Nail/Disk	SURFACE TYPE:	Asphalt
		SURFACE THICKNESS:	5.00"
		ROAD BASE THICKNESS:	2.00"
MANUAL DEPTH (TOP):	4.17'	UTILITY REQUESTED:	Gas
TOP OF UTILITY ELEVATION:	103.34	UTILITY FOUND:	Gas
		UTILITY SIZE:	6.00"
		UTILITY MATERIAL:	Steel
		SOIL CONDITIONS:	Dry, Compact, Clay

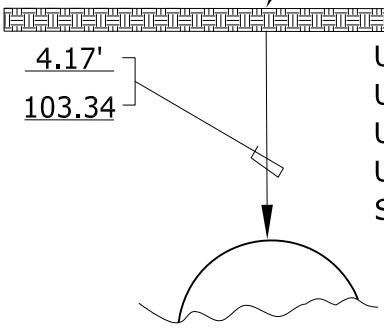

PROFILE VIEW - NOT TO SCALE

Note: Reference pin set over crown of pipe. Road base consists of stone.

BEP = Building Entry Point; EOI = End of Information; EORI = End of Records Information; EOWL = End of Work Limit

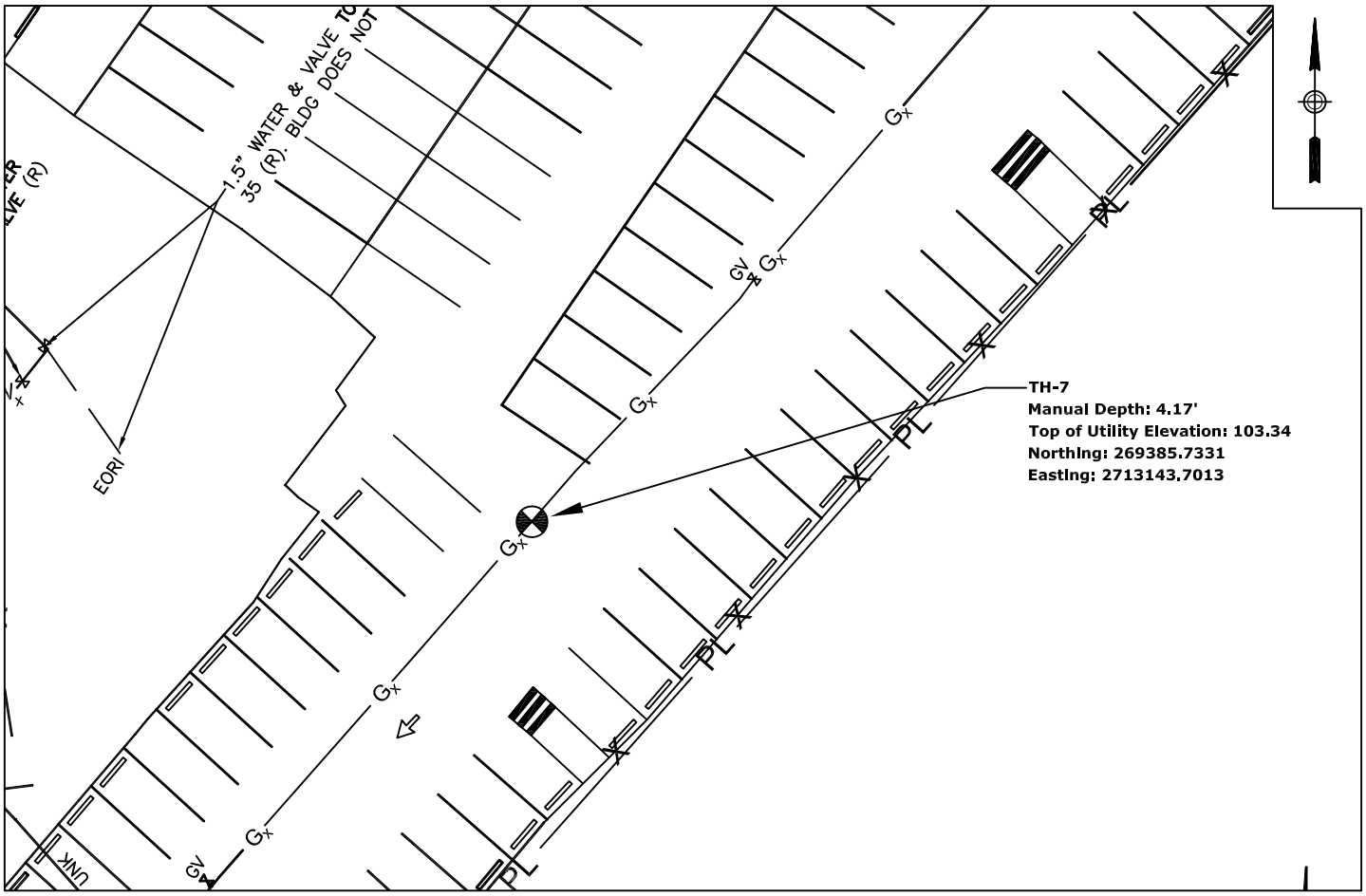

PLAN VIEW - NOT TO SCALE

SURVEYOR: Dawood PREPARED BY: Tony Harris CHECKED BY: Steve Myers

Test Hole 7 Photo 1

Test Hole 7 Photo 2

Test Hole 7 Photo 3

Test Hole 7 Photo 4

Project Name:	DLA Troop Support	TBE Office:	Burlington, NJ
Project Number:	PA08200101	Crew Leader:	Caruso
Test Hole Date:	9-24-14	SUE Crew:	Caruso/Conticchio
City-State:	Philadelphia, PA	Truck No:	55-402
Location:	DLA Troop Support HQ	Units:	☑English ☐Metric

Cardno TBE
Shaping the Future

Subsurface Utility Engineering
Test Hole Field Data

TEST HOLE:	8	SURFACE ELEVATION:	107.85
IDENTIFIED BY:	Nail/Disk	SURFACE TYPE:	Asphalt
		SURFACE THICKNESS:	5.00"
		ROAD BASE THICKNESS:	5.00"
MANUAL DEPTH (TOP):	4.34'	UTILITY REQUESTED:	Gas
TOP OF UTILITY ELEVATION:	103.51	UTILITY FOUND:	Gas
		UTILITY SIZE:	6.00"
		UTILITY MATERIAL:	Steel
		SOIL CONDITIONS:	Moist, Clay

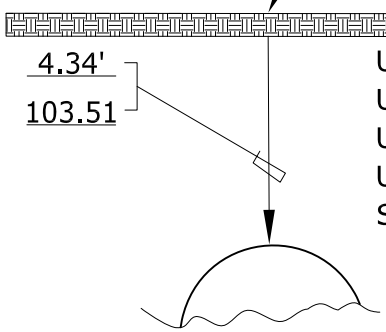

PROFILE VIEW - NOT TO SCALE

Note: Reference pin set over crown of pipe. Road base consists of compacted stone.

BEP = Building Entry Point; EOI = End of Information; EORI = End of Records Information; EOWL = End of Work Limit

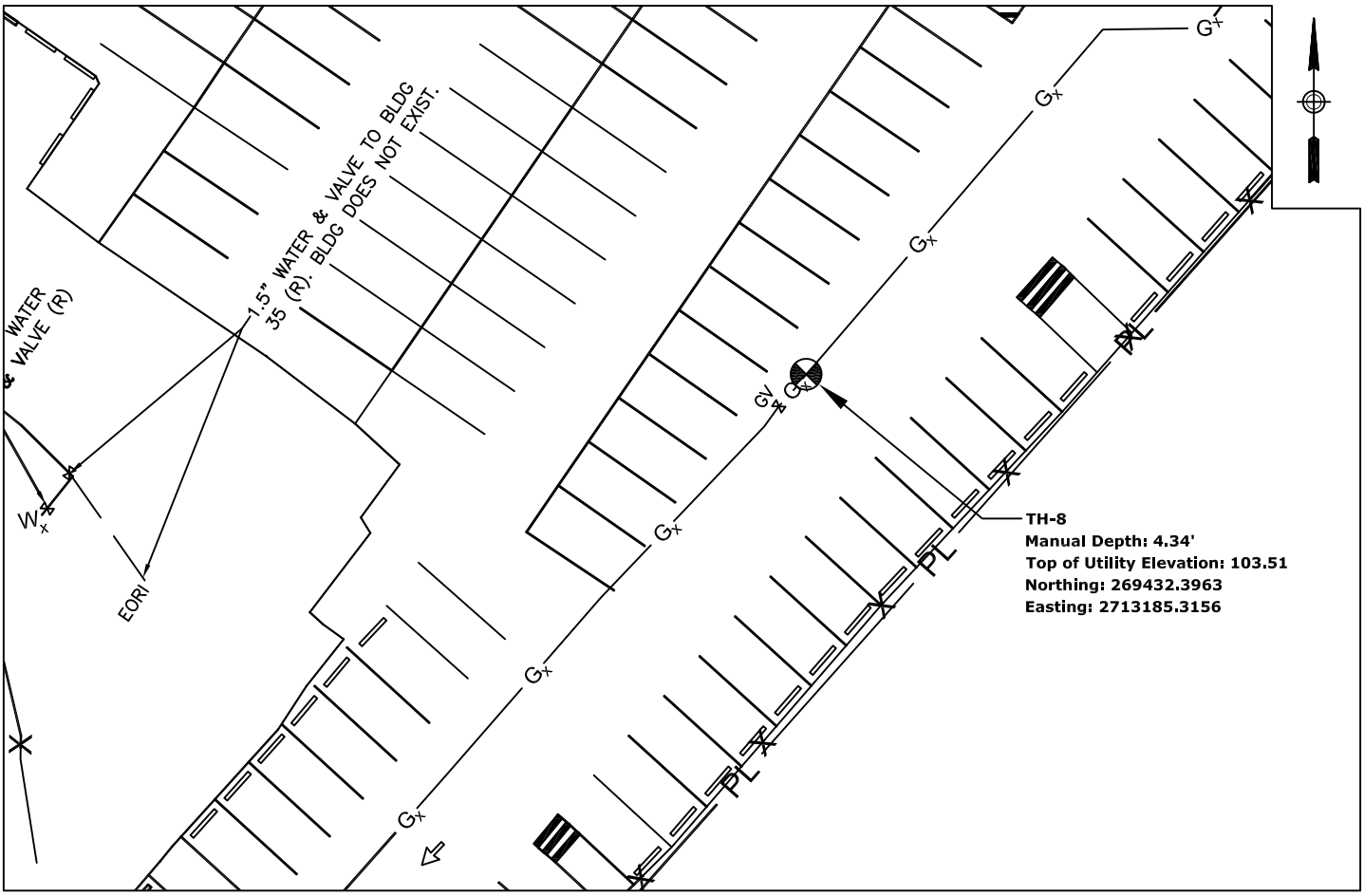

PLAN VIEW - NOT TO SCALE

SURVEYOR: Dawood PREPARED BY: Tony Harris CHECKED BY: Steve Myers

Test Hole 8 Photo 1

Test Hole 8 Photo 2

Test Hole 8 Photo 3

Test Hole 8 Photo 4

Project Name:	DLA Troop Support	TBE Office:	Burlington, NJ
Project Number:	PA08200101	Crew Leader:	Caruso
Test Hole Date:	9-24-14	SUE Crew:	Caruso/Conticchio
City-State:	Philadelphia, PA	Truck No:	55-402
Location:	DLA Troop Support HQ	Units:	☑English ☐Metric

Cardno TBE
Shaping the Future

Subsurface Utility Engineering
Test Hole Field Data

TEST HOLE:	9	SURFACE ELEVATION:	110.31
IDENTIFIED BY:	Nail/Disk	SURFACE TYPE:	Asphalt
		SURFACE THICKNESS:	3.00"
		ROAD BASE THICKNESS:	9.00"
MANUAL DEPTH (TOP):	5.34'	UTILITY REQUESTED:	Water
TOP OF UTILITY ELEVATION:	104.97	UTILITY FOUND:	Water
		UTILITY SIZE:	8.00"
		UTILITY MATERIAL:	Ductile Iron Pipe
		SOIL CONDITIONS:	Moist, Clay, Rock

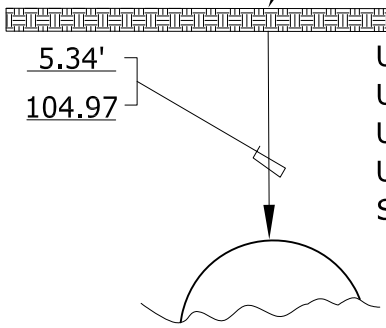

PROFILE VIEW - NOT TO SCALE

Note: Reference pin set over crown of pipe. Road base consists of concrete.

BEP = Building Entry Point; EOI = End of Information; EORI = End of Records Information; EOWL = End of Work Limit

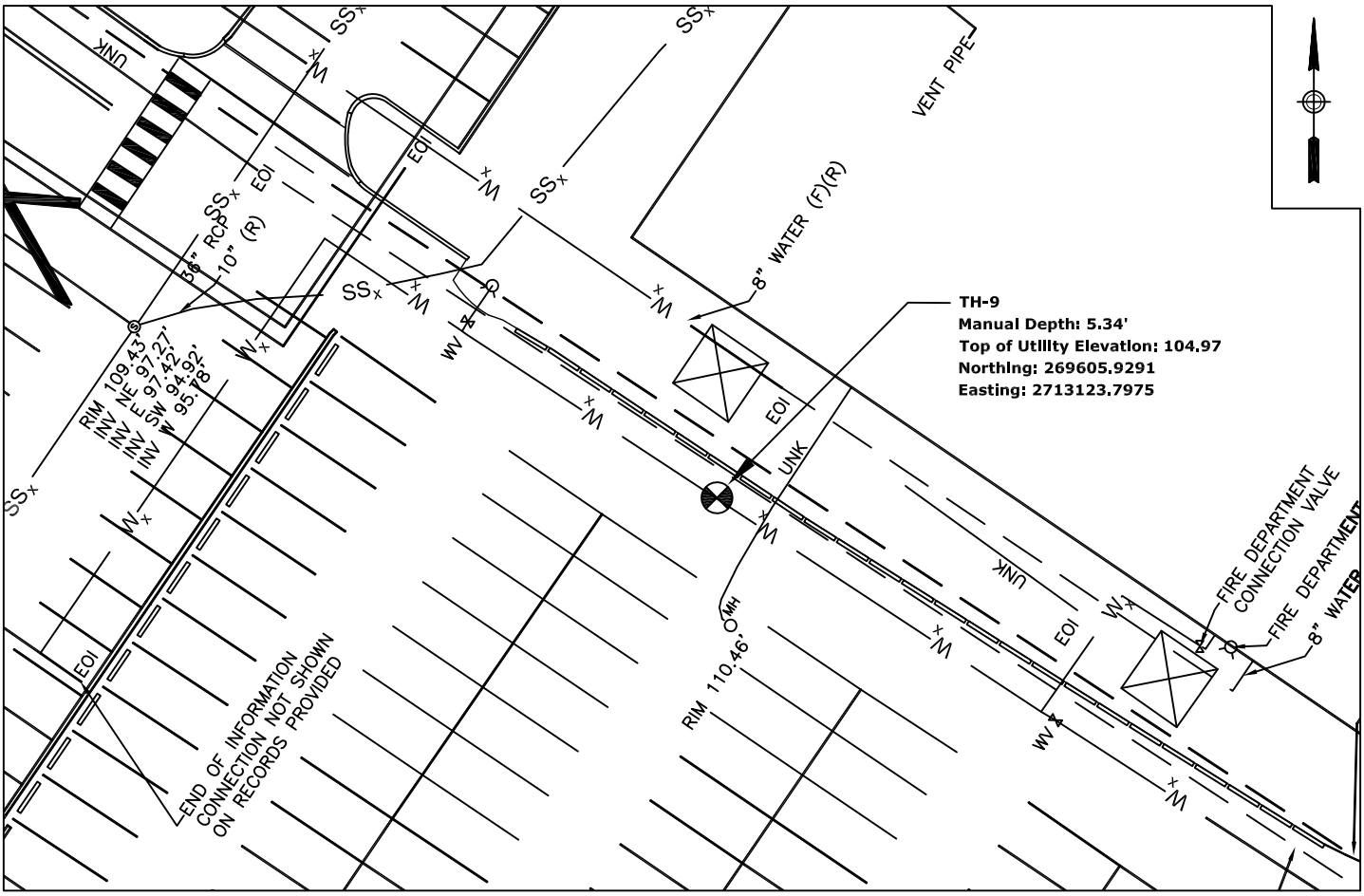

PLAN VIEW - NOT TO SCALE

SURVEYOR: Dawood PREPARED BY: Tony Harris CHECKED BY: Steve Myers

Test Hole 9 Photo 1

Test Hole 9 Photo 2

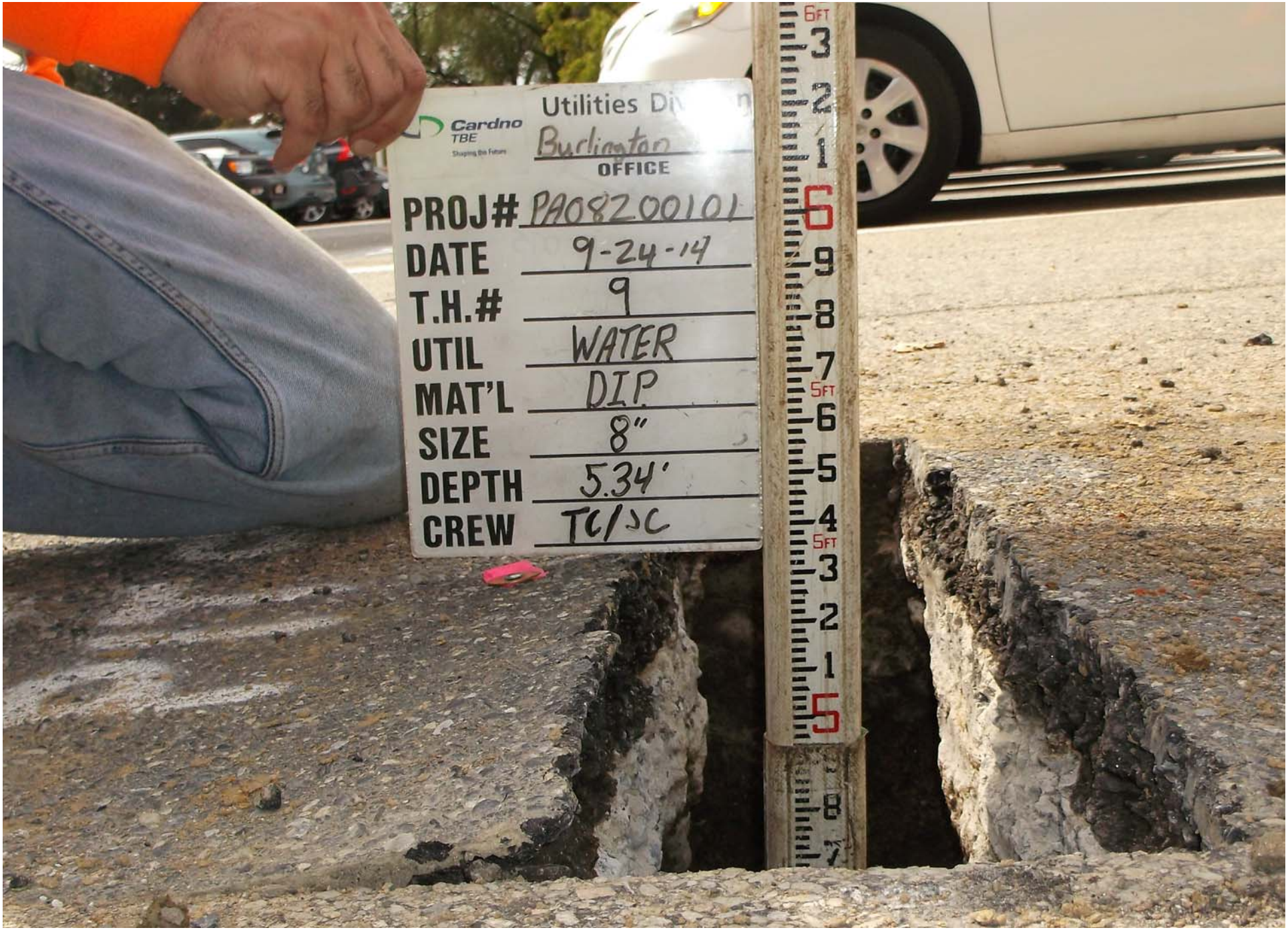

Test Hole 9 Photo 3

Test Hole 9 Photo 4

Project Name:	DLA Troop Support	TBE Office:	Burlington, NJ
Project Number:	PA08200101	Crew Leader:	Caruso
Test Hole Date:	9-24-14	SUE Crew:	Caruso/Conticchio
City-State:	Philadelphia, PA	Truck No:	55-402
Location:	DLA Troop Support HQ	Units:	☑English ☐Metric

Cardno TBE
Shaping the Future

Subsurface Utility Engineering
Test Hole Field Data

TEST HOLE:	10	SURFACE ELEVATION:	108.56
IDENTIFIED BY:	Nail/Disk	SURFACE TYPE:	Asphalt
		SURFACE THICKNESS:	3.00"
		ROAD BASE THICKNESS:	9.00"
MANUAL DEPTH (TOP):	3.66'	UTILITY REQUESTED:	Water
TOP OF UTILITY ELEVATION:	104.90	UTILITY FOUND:	Water
		UTILITY SIZE:	6.00"
		UTILITY MATERIAL:	Ductile Iron Pipe
		SOIL CONDITIONS:	Moist, Clay, Rock

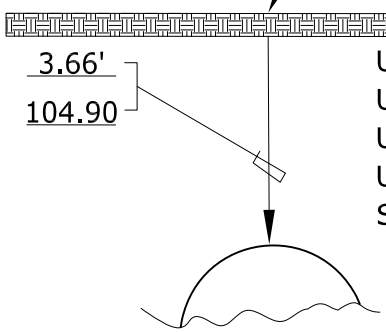

PROFILE VIEW - NOT TO SCALE

Note: Reference pin set over crown of pipe. Encountered ground water while performing test hole. Road base consists of concrete.
BEP = Building Entry Point; EOI = End of Information; EORI = End of Records Information; EOWL = End of Work Limit

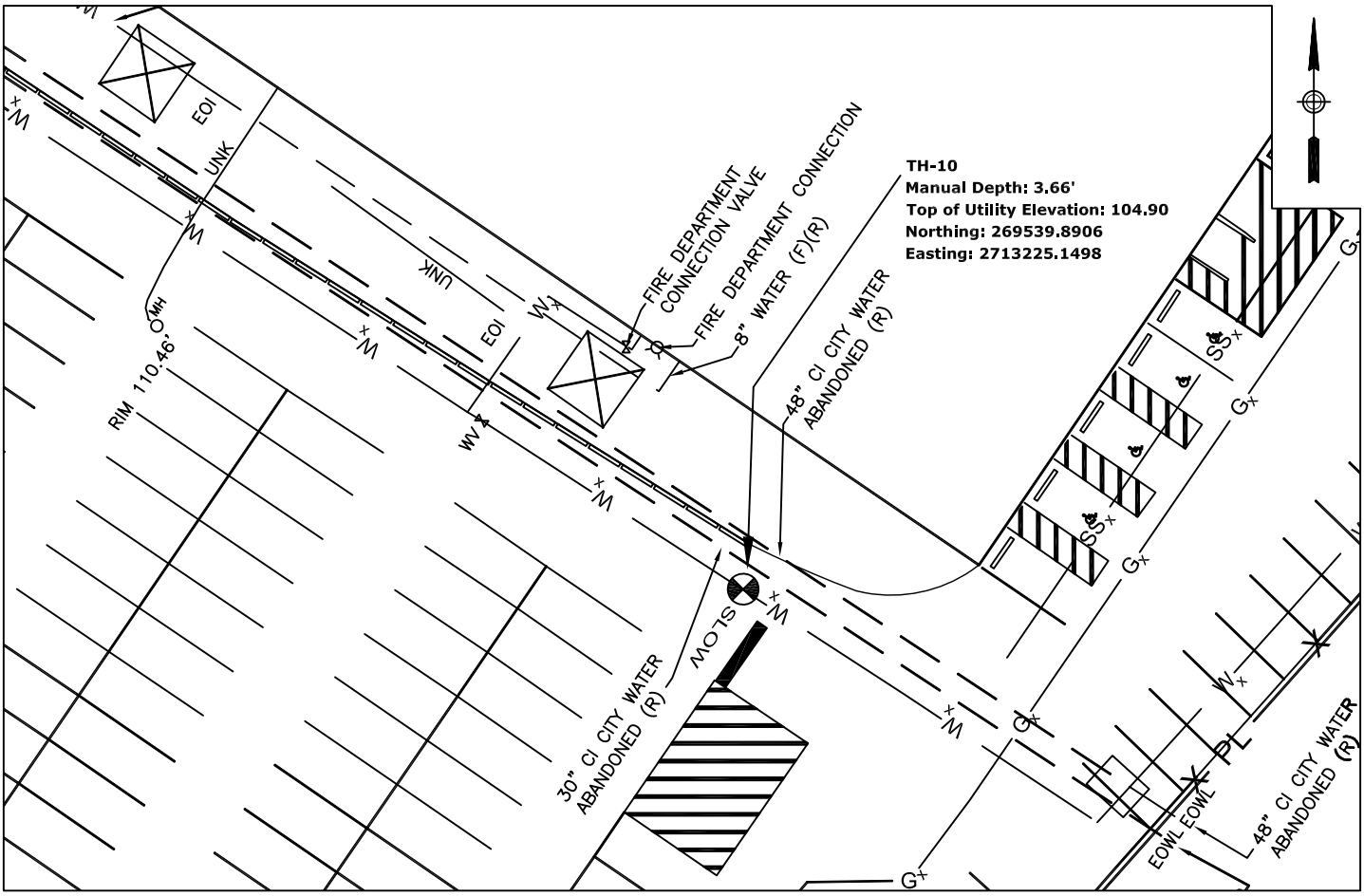

PLAN VIEW - NOT TO SCALE

SURVEYOR: Dawood PREPARED BY: Tony Harris CHECKED BY: Steve Myers

Test Hole 10 Photo 1

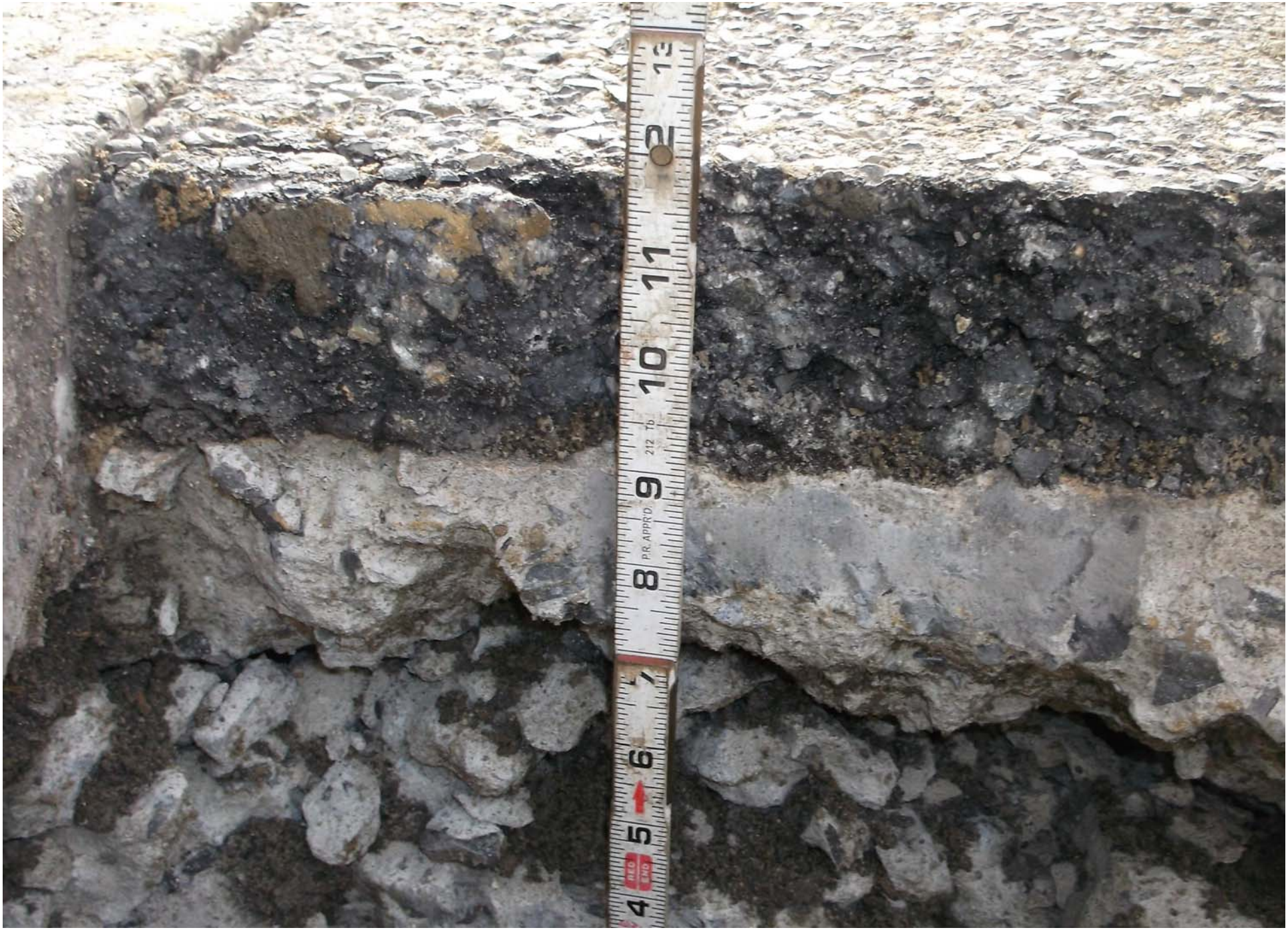

Test Hole 10 Photo 2

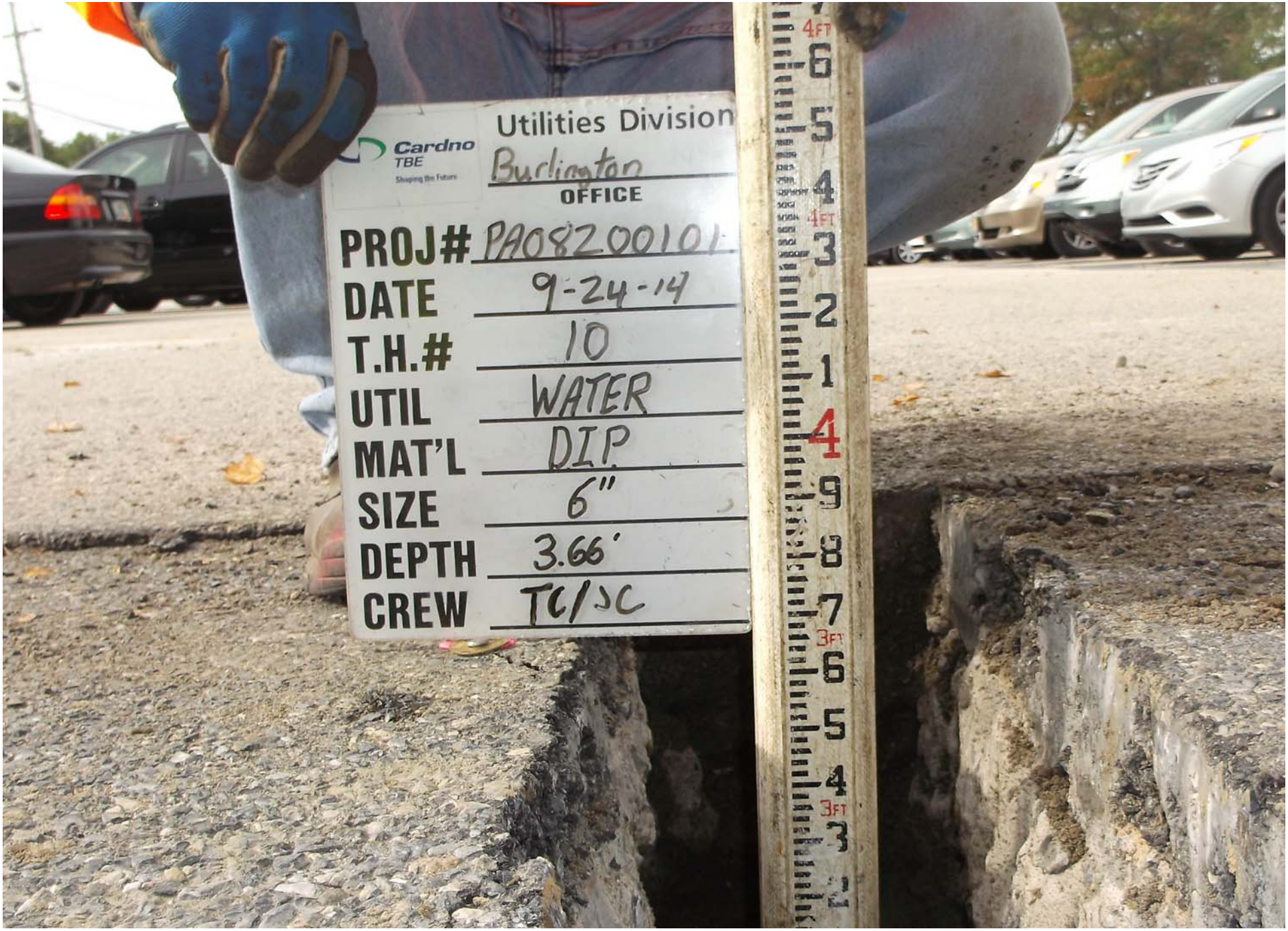

Test Hole 10 Photo 3

Test Hole 10 Photo 4

Project Name:	DLA Troop Support	TBE Office:	Burlington, NJ
Project Number:	PA08200101	Crew Leader:	Caruso
Test Hole Date:	9-29-14	SUE Crew:	Caruso/Conticchio
City-State:	Philadelphia, PA	Truck No:	55-402
Location:	DLA Troop Support HQ	Units:	☑English ☐Metric

Cardno TBE
Shaping the Future

Subsurface Utility Engineering
Test Hole Field Data

TEST HOLE:	11	SURFACE ELEVATION:	109.84
IDENTIFIED BY:	Nail/Disk	SURFACE TYPE:	Asphalt
		SURFACE THICKNESS:	6.00"
		ROAD BASE THICKNESS:	4.00"
MANUAL DEPTH (TOP):	10.25'	UTILITY REQUESTED:	Sanitary
TOP OF UTILITY ELEVATION:	99.59	UTILITY FOUND:	Sanitary
		UTILITY SIZE:	10.00"
		UTILITY MATERIAL:	See Note
		SOIL CONDITIONS:	Clay, Rock, Sand

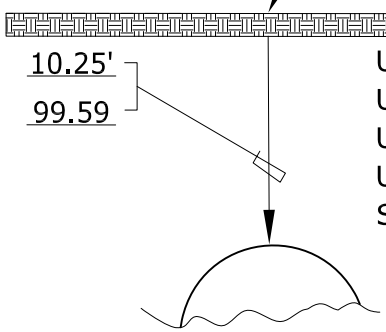

PROFILE VIEW - NOT TO SCALE

Note: Reference pin set over crown of pipe. Unable to verify pipe material. Road base consists of concrete. Unknown pipes were found while performing test hole, for additional information see forms for Test Hole 11A and Test Hole 11B.
BEP = Building Entry Point; EOI = End of Information; EORI = End of Records Information; EOWL = End of Work Limit

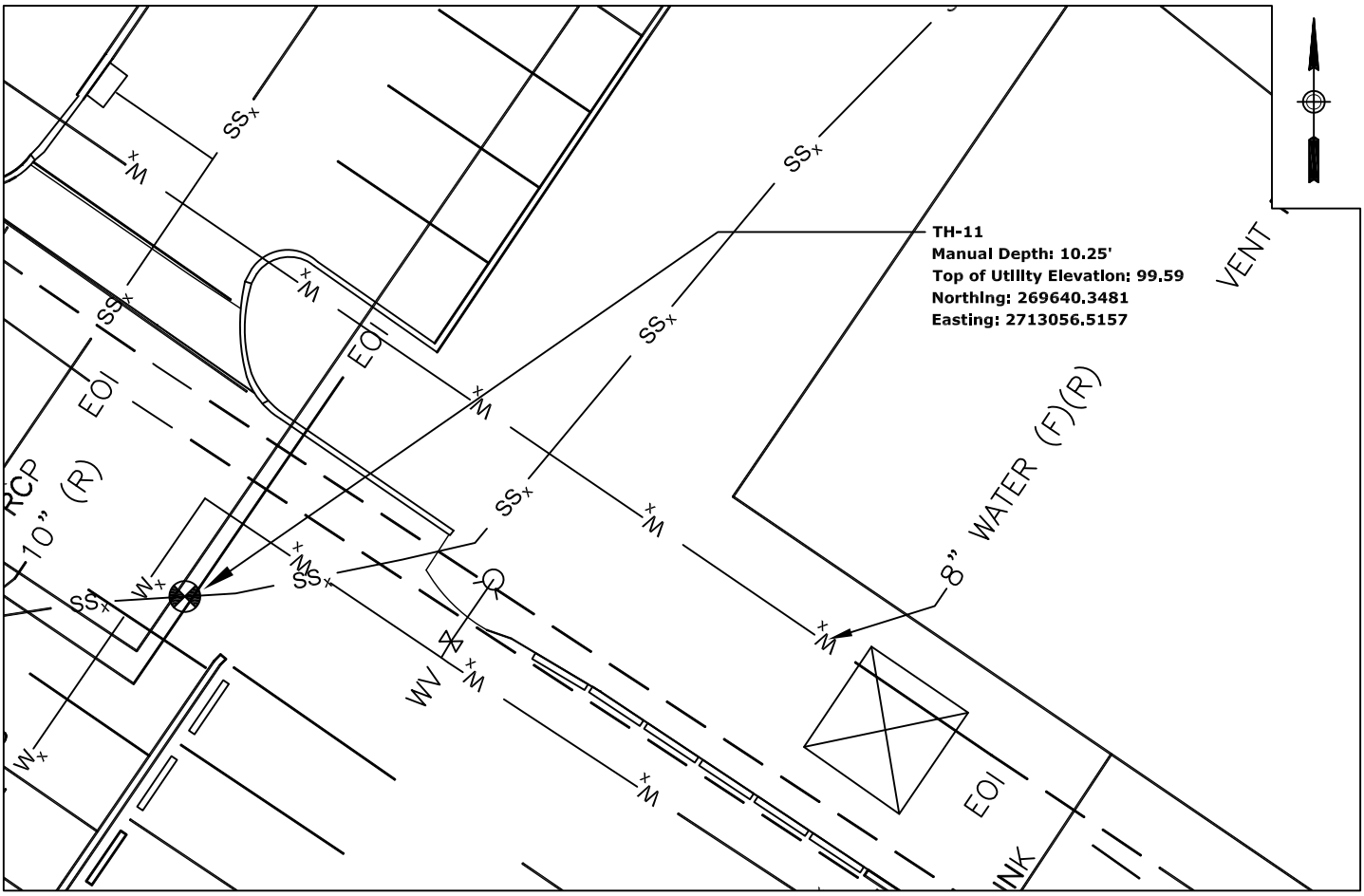

PLAN VIEW - NOT TO SCALE

SURVEYOR: Dawood PREPARED BY: Tony Harris CHECKED BY: Steve Myers

Test Hole 11 Photo 1

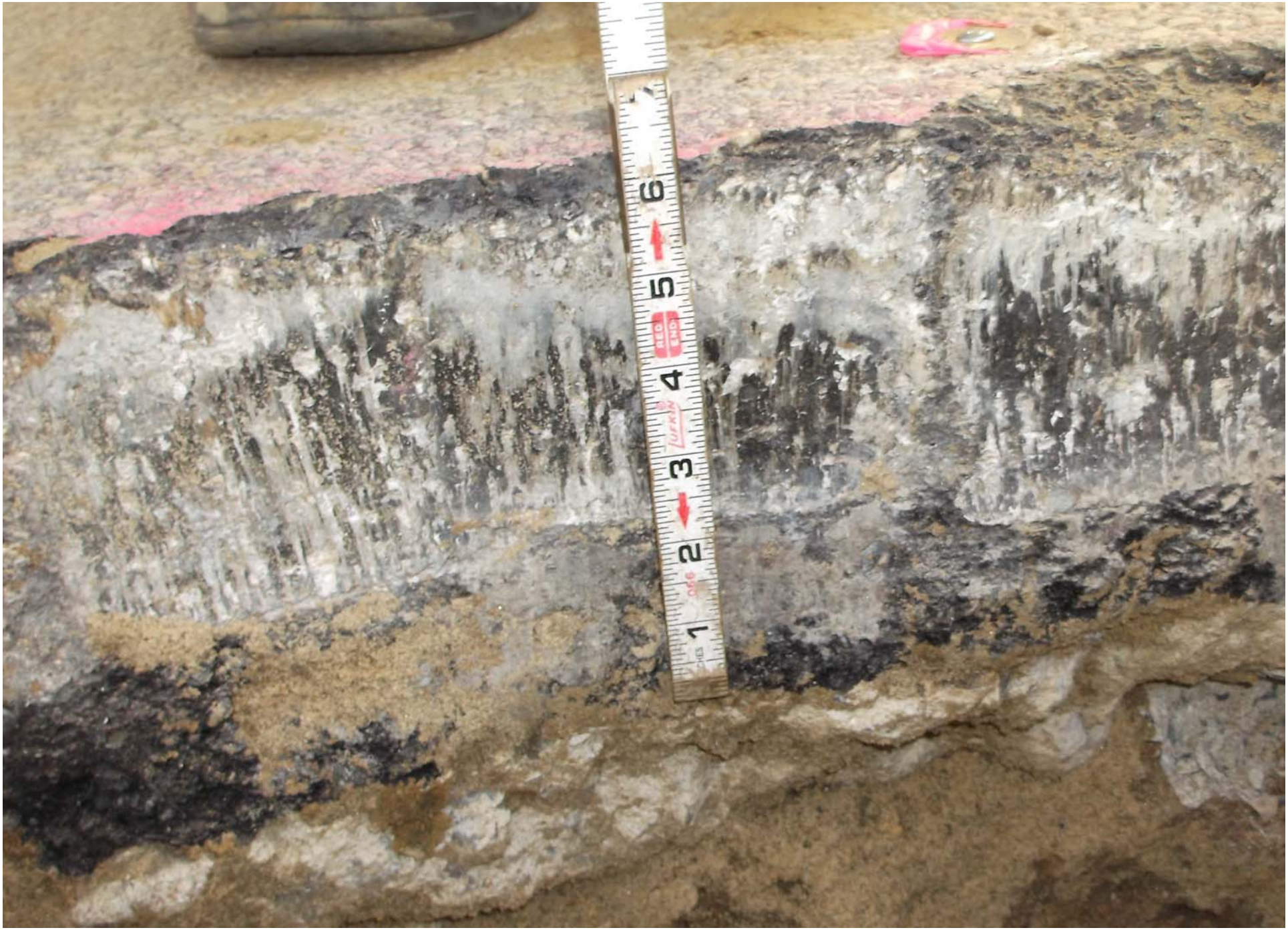

Test Hole 11 Photo 2

Test Hole 11 Photo 3

Test Hole 11 Photo 4

Project Name:	DLA Troop Support	TBE Office:	Burlington, NJ
Project Number:	PA08200101	Crew Leader:	Caruso
Test Hole Date:	9-29-14	SUE Crew:	Caruso/Conticchio
City-State:	Philadelphia, PA	Truck No:	55-402
Location:	DLA Troop Support HQ	Units:	☑English ☐Metric

Cardno TBE
Shaping the Future

Subsurface Utility Engineering
Test Hole Field Data

TEST HOLE:	11A	SURFACE ELEVATION:	109.78
IDENTIFIED BY:	Nail/Disk	SURFACE TYPE:	Asphalt
		SURFACE THICKNESS:	6.00"
		ROAD BASE THICKNESS:	4.00"
MANUAL DEPTH (TOP):	4.75'	UTILITY REQUESTED:	Sanitary
TOP OF UTILITY ELEVATION:	105.03	UTILITY FOUND:	See Note
		UTILITY SIZE:	4.00"
		UTILITY MATERIAL:	Ductile Iron Pipe
		SOIL CONDITIONS:	Clay, Rock, Sand

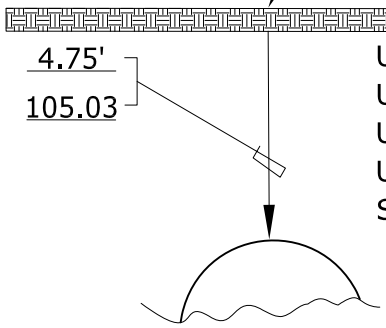

PROFILE VIEW - NOT TO SCALE

Note: Reference pin set over crown of pipe. This unknown pipe was found during excavation of Test Hole 11, unable to verify destination. Road base consists of concrete.

BEP = Building Entry Point; EOI = End of Information; EORI = End of Records Information; EOWL = End of Work Limit

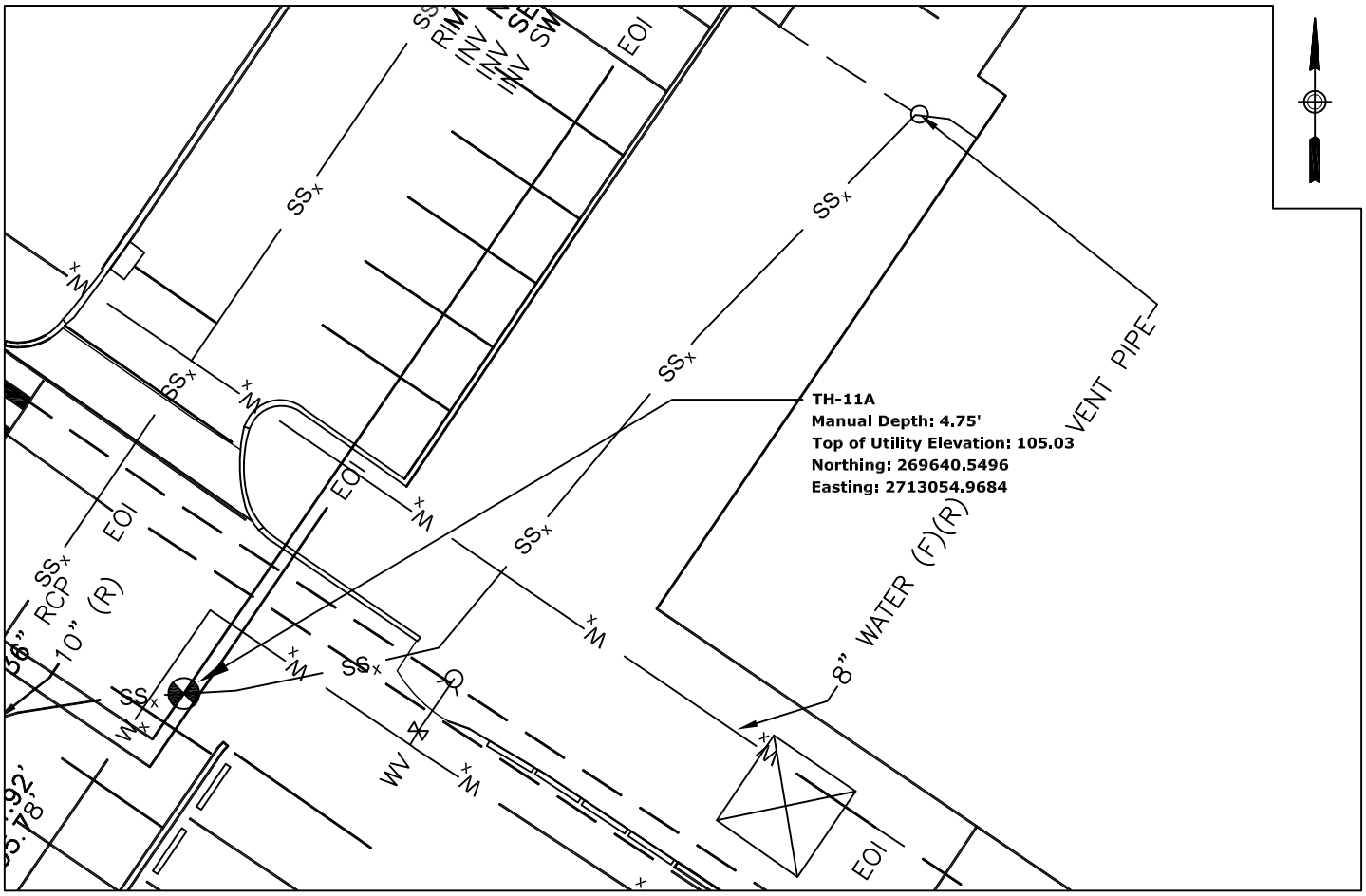

PLAN VIEW - NOT TO SCALE

SURVEYOR: Dawood PREPARED BY: Tony Harris CHECKED BY: Steve Myers

Test Hole 11A Photo 1

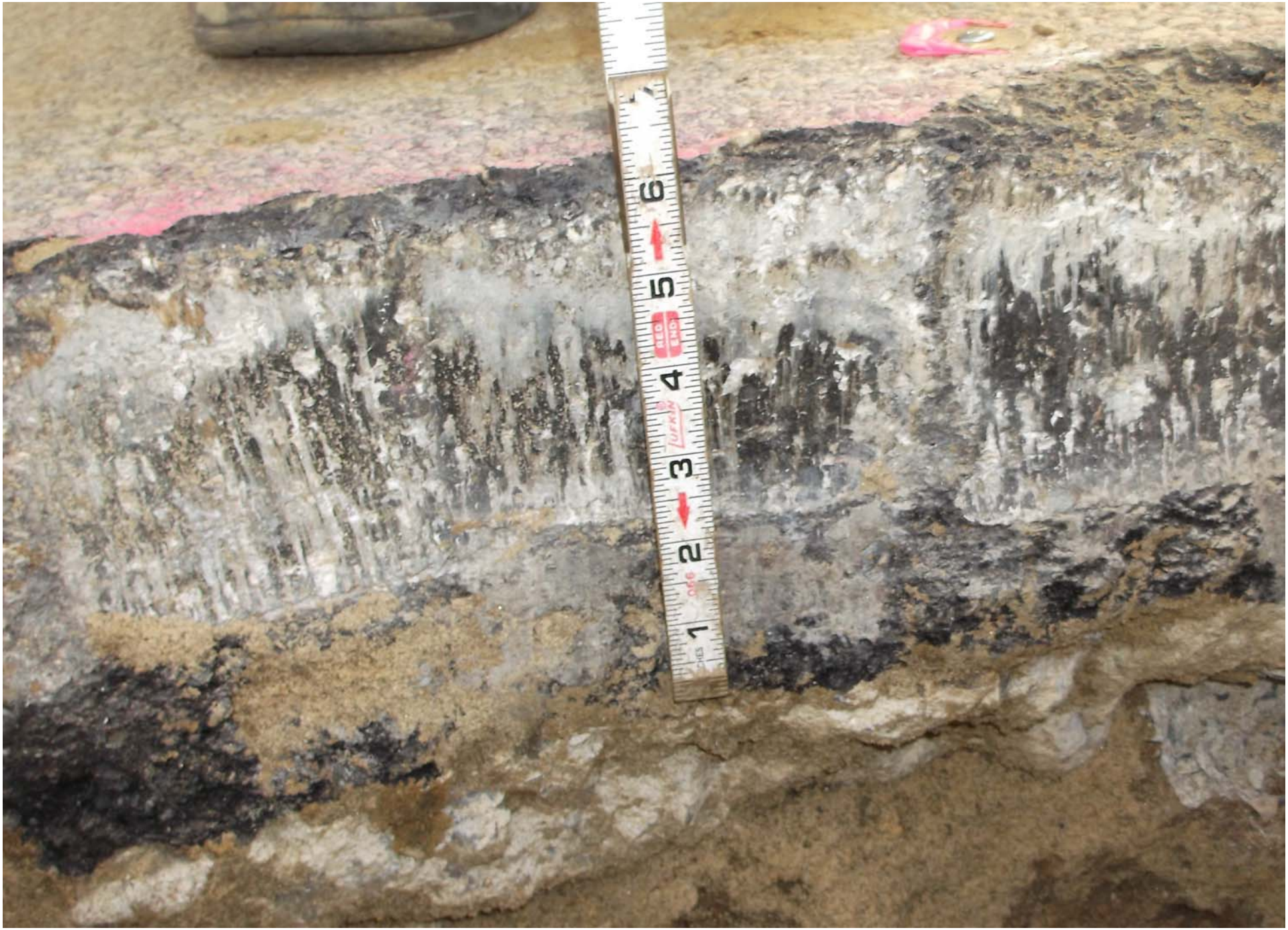

Test Hole 11A Photo 2

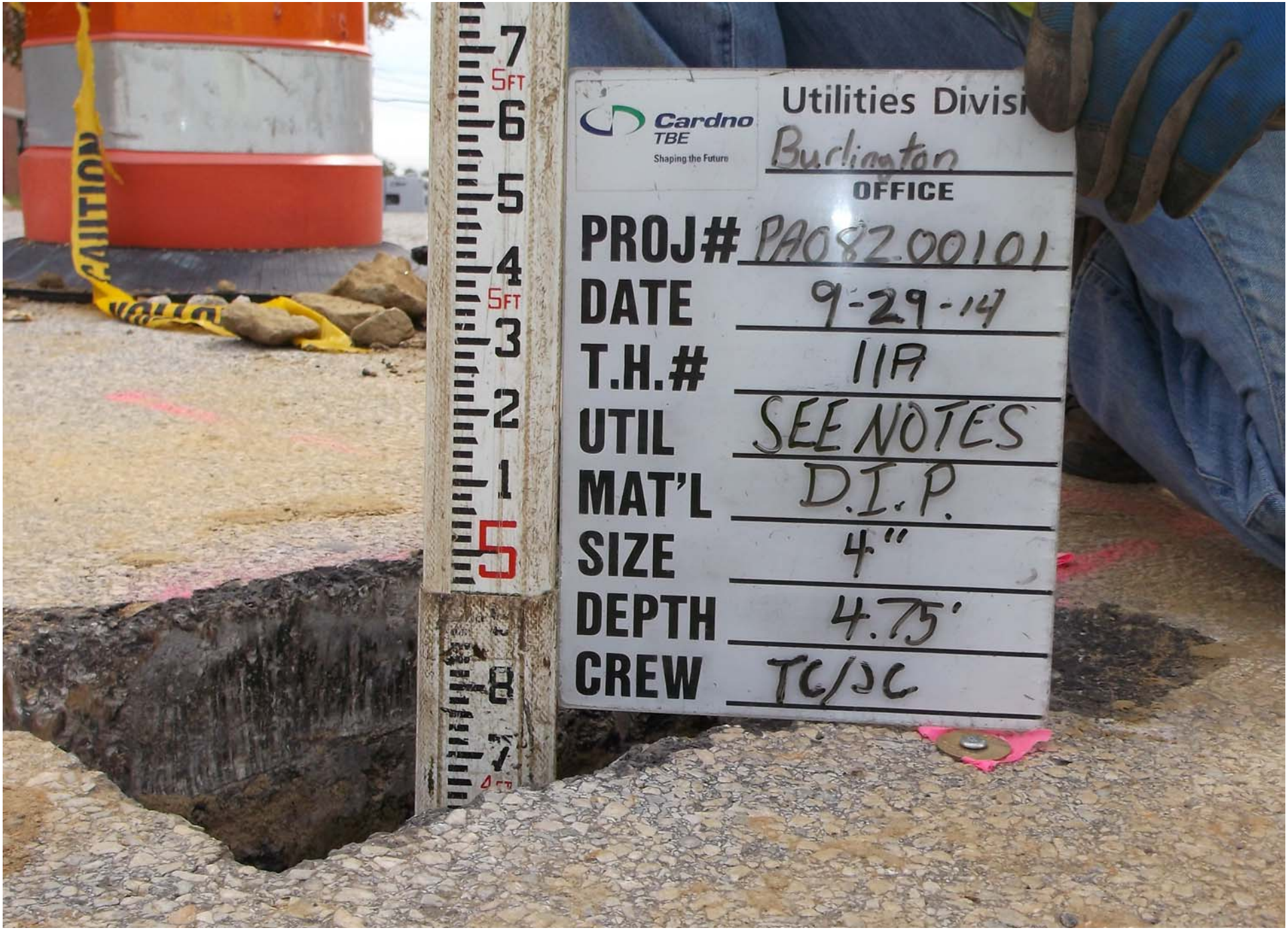

Test Hole 11A Photo 3

Test Hole 11A Photo 4

Project Name:	DLA Troop Support	TBE Office:	Burlington, NJ
Project Number:	PA08200101	Crew Leader:	Caruso
Test Hole Date:	9-29-14	SUE Crew:	Caruso/Conticchio
City-State:	Philadelphia, PA	Truck No:	55-402
Location:	DLA Troop Support HQ	Units:	☑English ☐Metric

Cardno TBE
Shaping the Future

Subsurface Utility Engineering
Test Hole Field Data

TEST HOLE:	11B	SURFACE ELEVATION:	109.82
IDENTIFIED BY:	Nail/Disk	SURFACE TYPE:	Asphalt
		SURFACE THICKNESS:	6.00"
		ROAD BASE THICKNESS:	4.00"
MANUAL DEPTH (TOP):	4.60'	UTILITY REQUESTED:	Sanitary
TOP OF UTILITY ELEVATION:	105.22	UTILITY FOUND:	See Note
		UTILITY SIZE:	6.00"
		UTILITY MATERIAL:	Ductile Iron Pipe
		SOIL CONDITIONS:	Clay, Rock, Sand

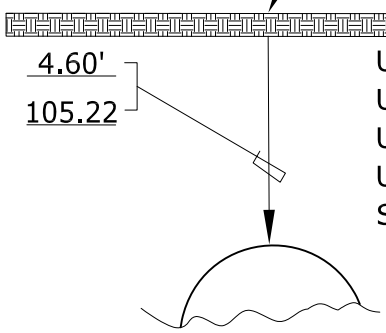

PROFILE VIEW - NOT TO SCALE

Note: Reference pin set over crown of pipe. This unknown pipe was found during excavation of Test Hole 11, unable to verify destination. Road base consists of concrete.

BEP = Building Entry Point; EOI = End of Information; EORI = End of Records Information; EOWL = End of Work Limit

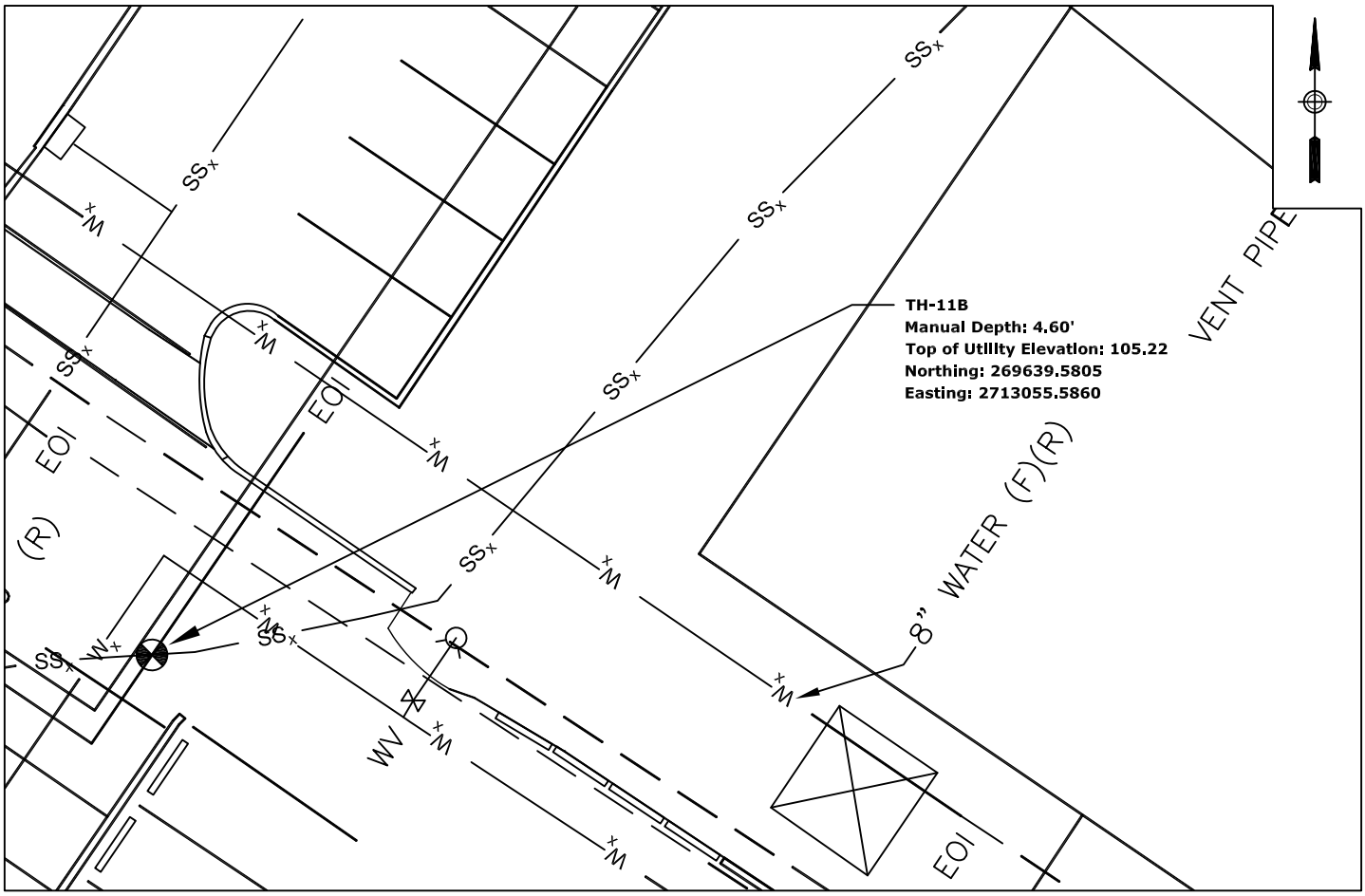

PLAN VIEW - NOT TO SCALE

SURVEYOR: Dawood PREPARED BY: Tony Harris CHECKED BY: Steve Myers

Test Hole 11B Photo 1

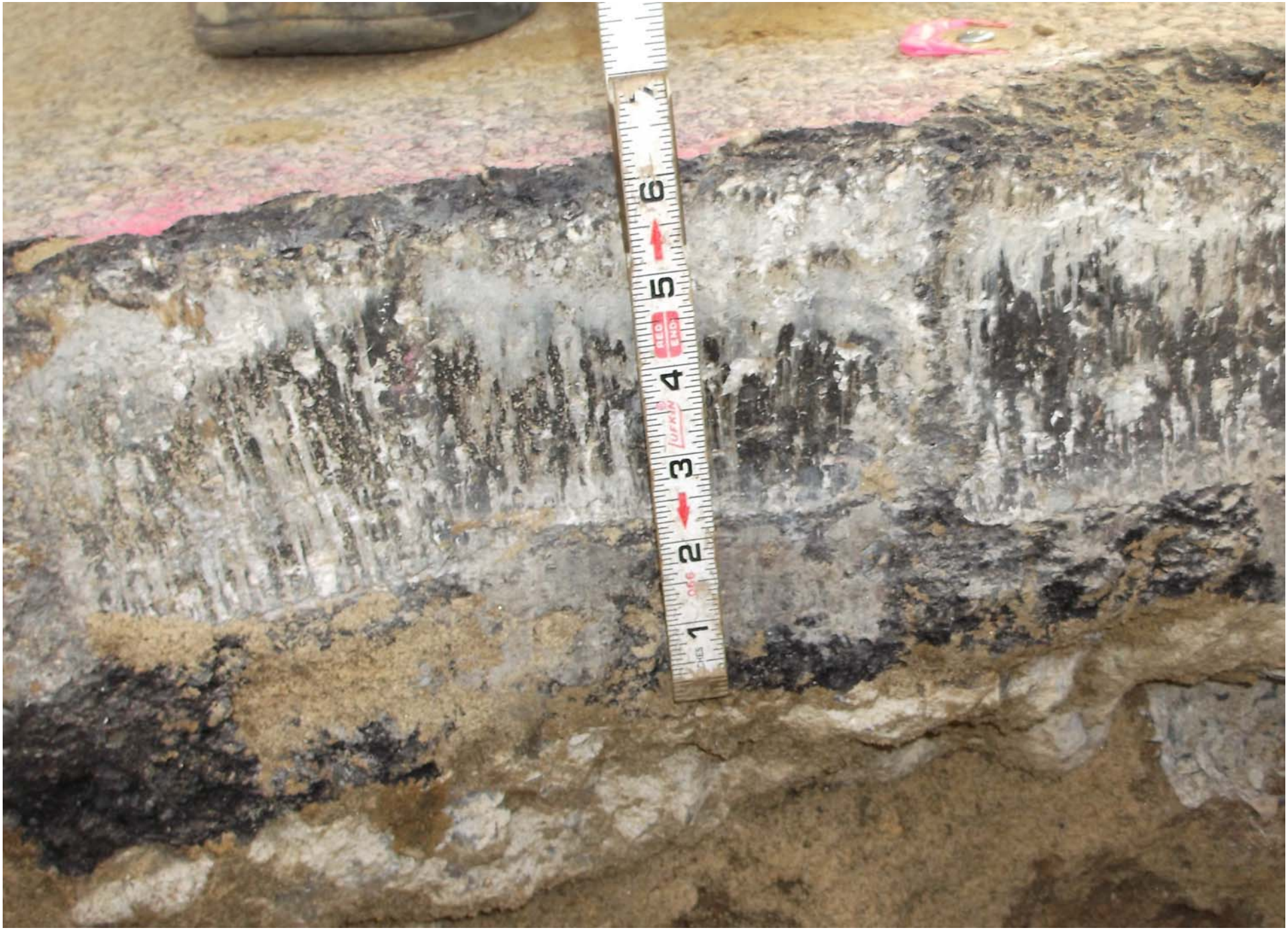

Test Hole 11B Photo 2

Test Hole 11B Photo 3

Test Hole 11B Photo 4

Project Name:	DLA Troop Support	TBE Office:	Burlington, NJ
Project Number:	PA08200101	Crew Leader:	Caruso
Test Hole Date:	9-29-14	SUE Crew:	Caruso/Conticchio
City-State:	Philadelphia, PA	Truck No:	55-402
Location:	DLA Troop Support HQ	Units:	☑English ☐Metric

Cardno TBE
Shaping the Future

Subsurface Utility Engineering
Test Hole Field Data

TEST HOLE:	12	SURFACE ELEVATION:	107.63
IDENTIFIED BY:	Nail/Disk	SURFACE TYPE:	Asphalt
		SURFACE THICKNESS:	4.50"
		ROAD BASE THICKNESS:	12.00"
MANUAL DEPTH (TOP):	4.12'	UTILITY REQUESTED:	Gas
TOP OF UTILITY ELEVATION:	103.51	UTILITY FOUND:	Gas
		UTILITY SIZE:	6.00"
		UTILITY MATERIAL:	Steel
		SOIL CONDITIONS:	Rock, Dry Clay

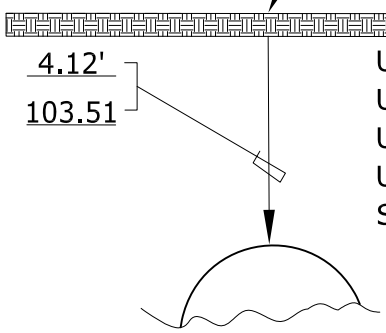

PROFILE VIEW - NOT TO SCALE

Note: Reference pin set over crown of pipe. Road base consists of concrete.

BEP = Building Entry Point; EOI = End of Information; EORI = End of Records Information; EOWL = End of Work Limit

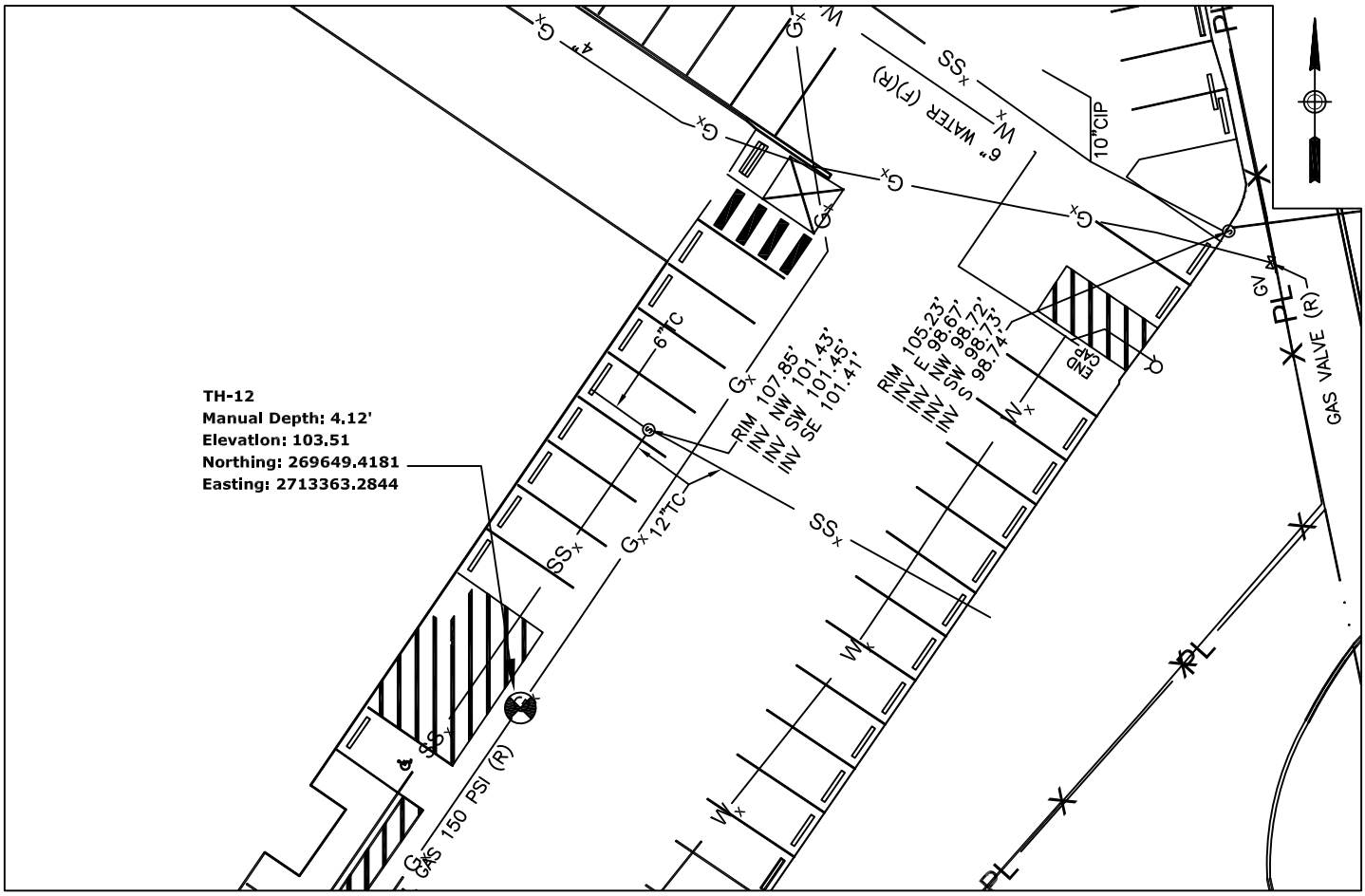

PLAN VIEW - NOT TO SCALE

SURVEYOR: Dawood PREPARED BY: Tony Harris CHECKED BY: Steve Myers

Test Hole 12 Photo 1

Test Hole 12 Photo 2

Test Hole 12 Photo 3

Test Hole 12 Photo 4

Project Name:	DLA Troop Support	TBE Office:	Burlington, NJ
Project Number:	PA08200101	Crew Leader:	Caruso
Test Hole Date:	10-02-14	SUE Crew:	Caruso/Conticchio
City-State:	Philadelphia, PA	Truck No:	55-402
Location:	DLA Troop Support HQ	Units:	☑English ☐Metric

Cardno TBE
Shaping the Future

Subsurface Utility Engineering
Test Hole Field Data

TEST HOLE:	13	SURFACE ELEVATION:	107.21
IDENTIFIED BY:	Nail/Disk	SURFACE TYPE:	Asphalt
		SURFACE THICKNESS:	3.00"
		ROAD BASE THICKNESS:	7.00"
MANUAL DEPTH (TOP):	3.73'	UTILITY REQUESTED:	Water
TOP OF UTILITY ELEVATION:	103.48	UTILITY FOUND:	Water
		UTILITY SIZE:	6.00"
		UTILITY MATERIAL:	Ductile Iron Pipe
		SOIL CONDITIONS:	Wet, Loose Clay

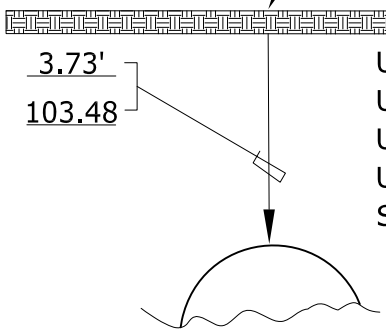

PROFILE VIEW - NOT TO SCALE

Note: Reference pin set over crown of pipe. Excessive ground water encountered. Road base consists of concrete

BEP = Building Entry Point; EOI = End of Information; EORI = End of Records Information; EOWL = End of Work Limit

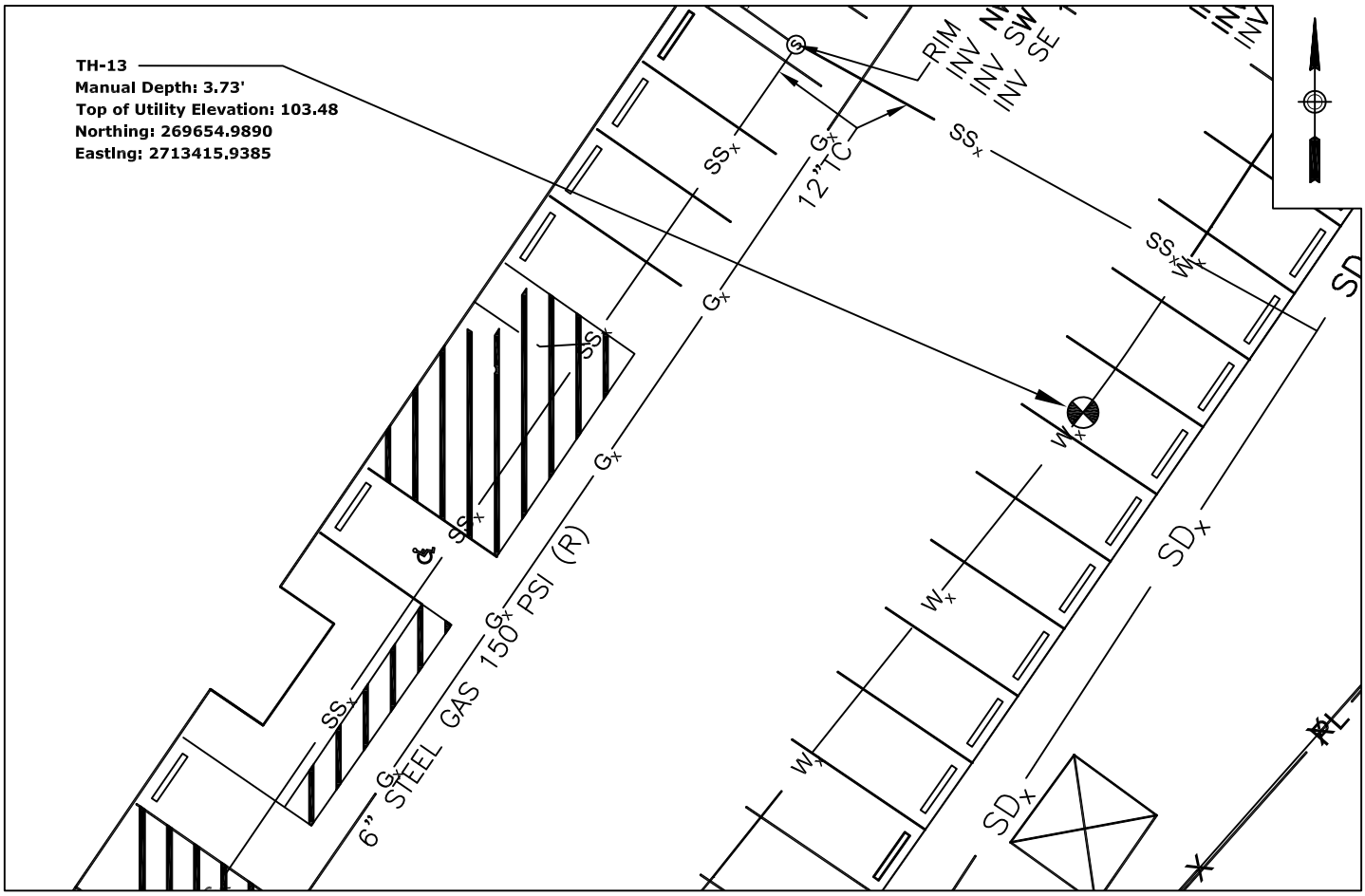

PLAN VIEW - NOT TO SCALE

SURVEYOR: Dawood PREPARED BY: Tony Harris CHECKED BY: Steve Myers

Test Hole 13 Photo 1

Test Hole 13 Photo 2

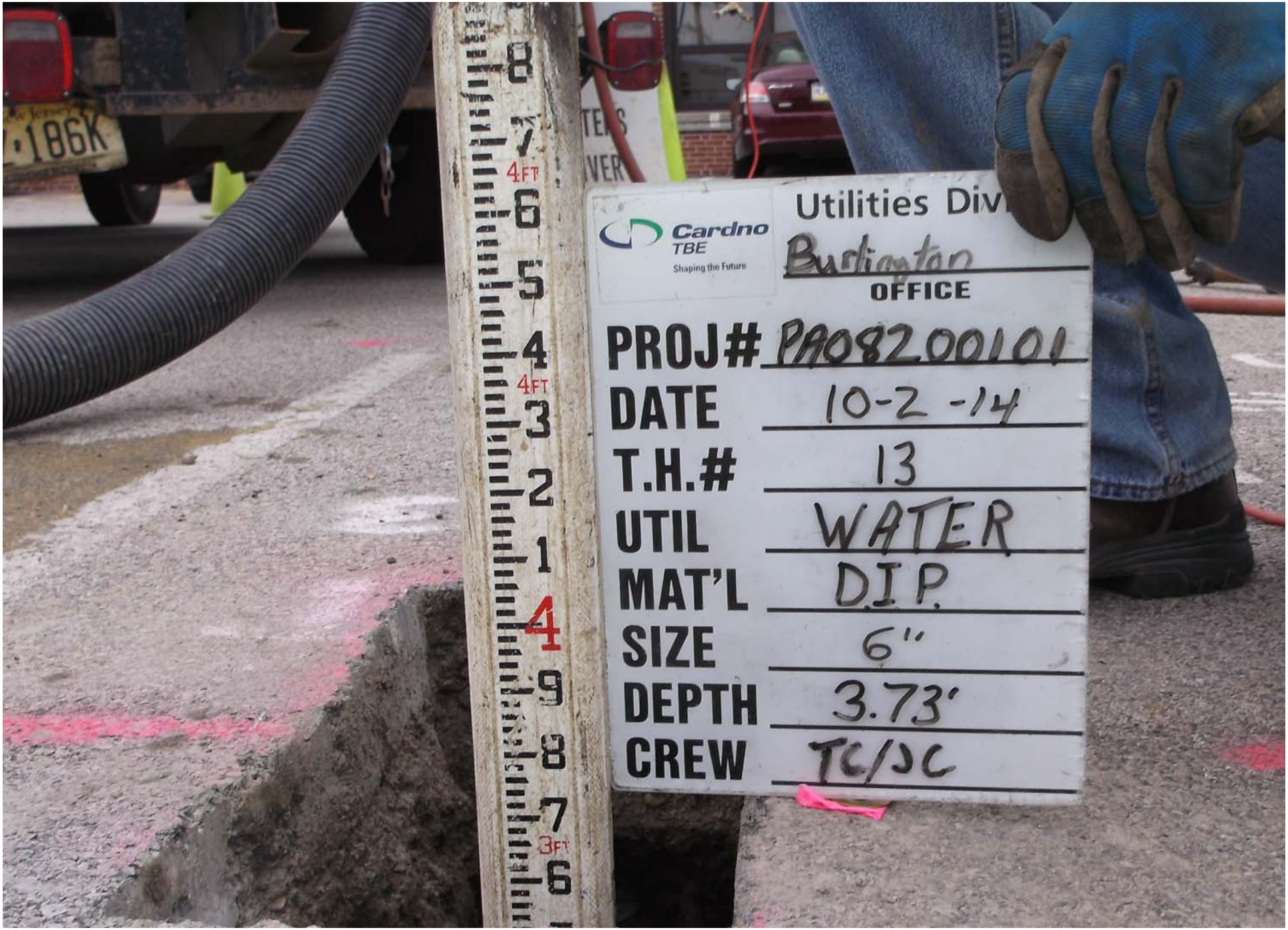

Test Hole 13 Photo 3

Test Hole 13 Photo 4

Project Name:	DLA Troop Support	TBE Office:	Burlington, NJ
Project Number:	PA08200101	Crew Leader:	Caruso
Test Hole Date:	9-30-14	SUE Crew:	Caruso/Conticchio
City-State:	Philadelphia, PA	Truck No:	55-402
Location:	DLA Troop Support HQ	Units:	☑English ☐Metric

Cardno TBE
Shaping the Future

Subsurface Utility Engineering
Test Hole Field Data

TEST HOLE:	14	SURFACE ELEVATION:	108.05
IDENTIFIED BY:	Nail/Disk	SURFACE TYPE:	Asphalt
		SURFACE THICKNESS:	5.00"
		ROAD BASE THICKNESS:	4.00"
MANUAL DEPTH (TOP):	4.01'	UTILITY REQUESTED:	Gas
TOP OF UTILITY ELEVATION:	104.04	UTILITY FOUND:	Gas
		UTILITY SIZE:	6.00"
		UTILITY MATERIAL:	Steel
		SOIL CONDITIONS:	Rock, Moist Clay

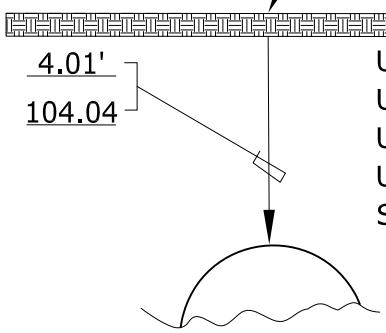

PROFILE VIEW - NOT TO SCALE

Note: Reference pin set over crown of pipe. Road base consists of concrete.

BEP = Building Entry Point; EOI = End of Information; EORI = End of Records Information; EOWL = End of Work Limit

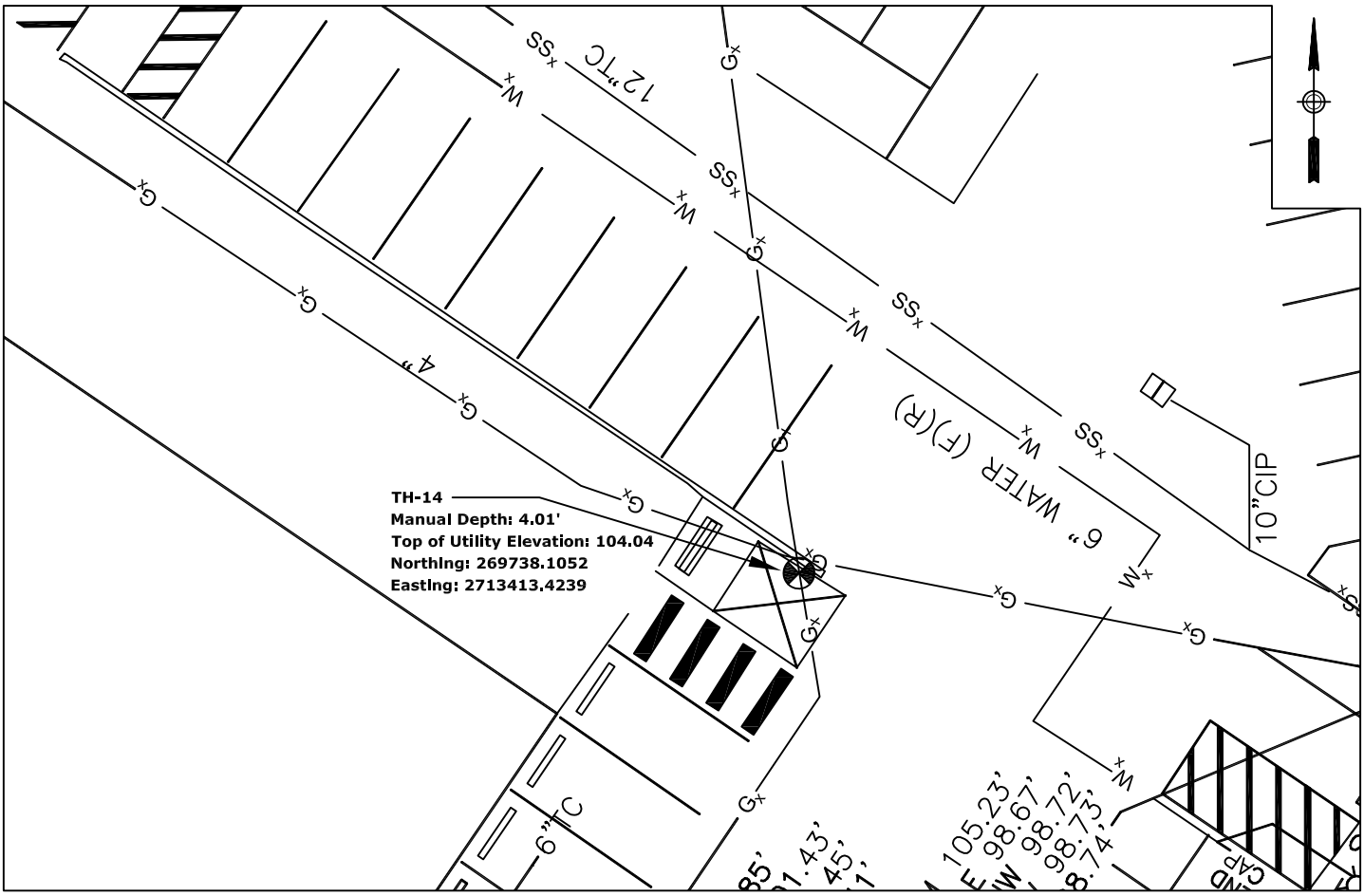

PLAN VIEW - NOT TO SCALE

SURVEYOR: Dawood PREPARED BY: Tony Harris CHECKED BY: Steve Myers

Test Hole 14 Photo 1

Test Hole 14 Photo 2

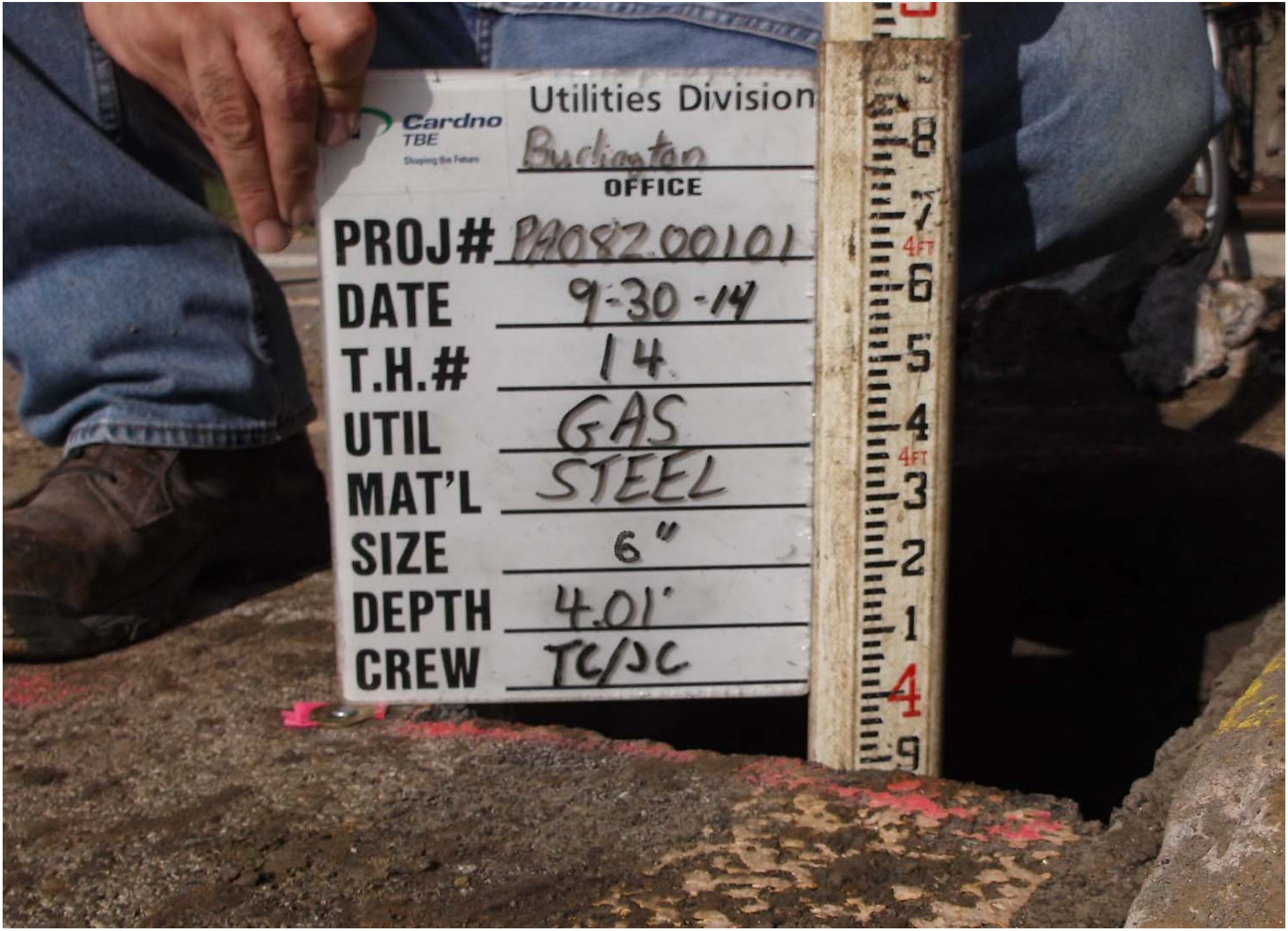

Test Hole 14 Photo 3

Test Hole 14 Photo 4

Project Name:	DLA Troop Support	TBE Office:	Burlington, NJ
Project Number:	PA08200101	Crew Leader:	Caruso
Test Hole Date:	9-30-14	SUE Crew:	Caruso/Conticchio
City-State:	Philadelphia, PA	Truck No:	55-402
Location:	DLA Troop Support HQ	Units:	☑English ☐Metric

Cardno TBE
Shaping the Future

Subsurface Utility Engineering
Test Hole Field Data

TEST HOLE:	14A	SURFACE ELEVATION:	108.13
IDENTIFIED BY:	Nail/Disk	SURFACE TYPE:	Asphalt
		SURFACE THICKNESS:	5.00"
		ROAD BASE THICKNESS:	4.00"
MANUAL DEPTH (TOP):	5.19'	UTILITY REQUESTED:	Gas
TOP OF UTILITY ELEVATION:	102.94	UTILITY FOUND:	Gas
		UTILITY SIZE:	4.00"
		UTILITY MATERIAL:	Steel
		SOIL CONDITIONS:	Rock, Moist Clay

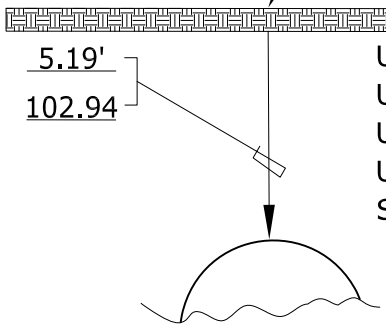

PROFILE VIEW - NOT TO SCALE

Note: Reference pin set over crown of pipe. Road base consists of concrete.

BEP = Building Entry Point; EOI = End of Information; EORI = End of Records Information; EOWL = End of Work Limit

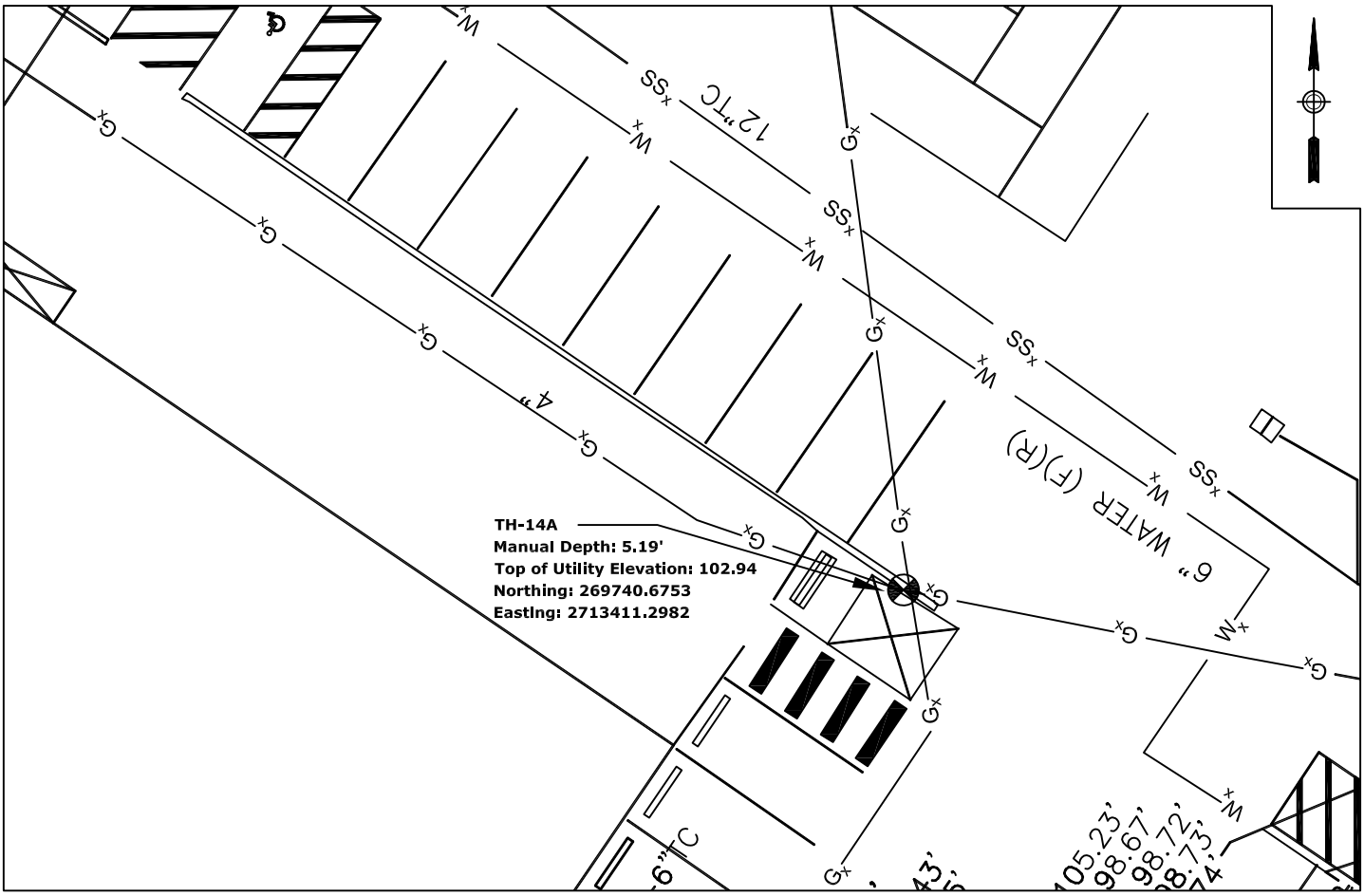

PLAN VIEW - NOT TO SCALE

SURVEYOR: Dawood PREPARED BY: Tony Harris CHECKED BY: Steve Myers

Test Hole 14A Photo 1

Test Hole 14A Photo 2

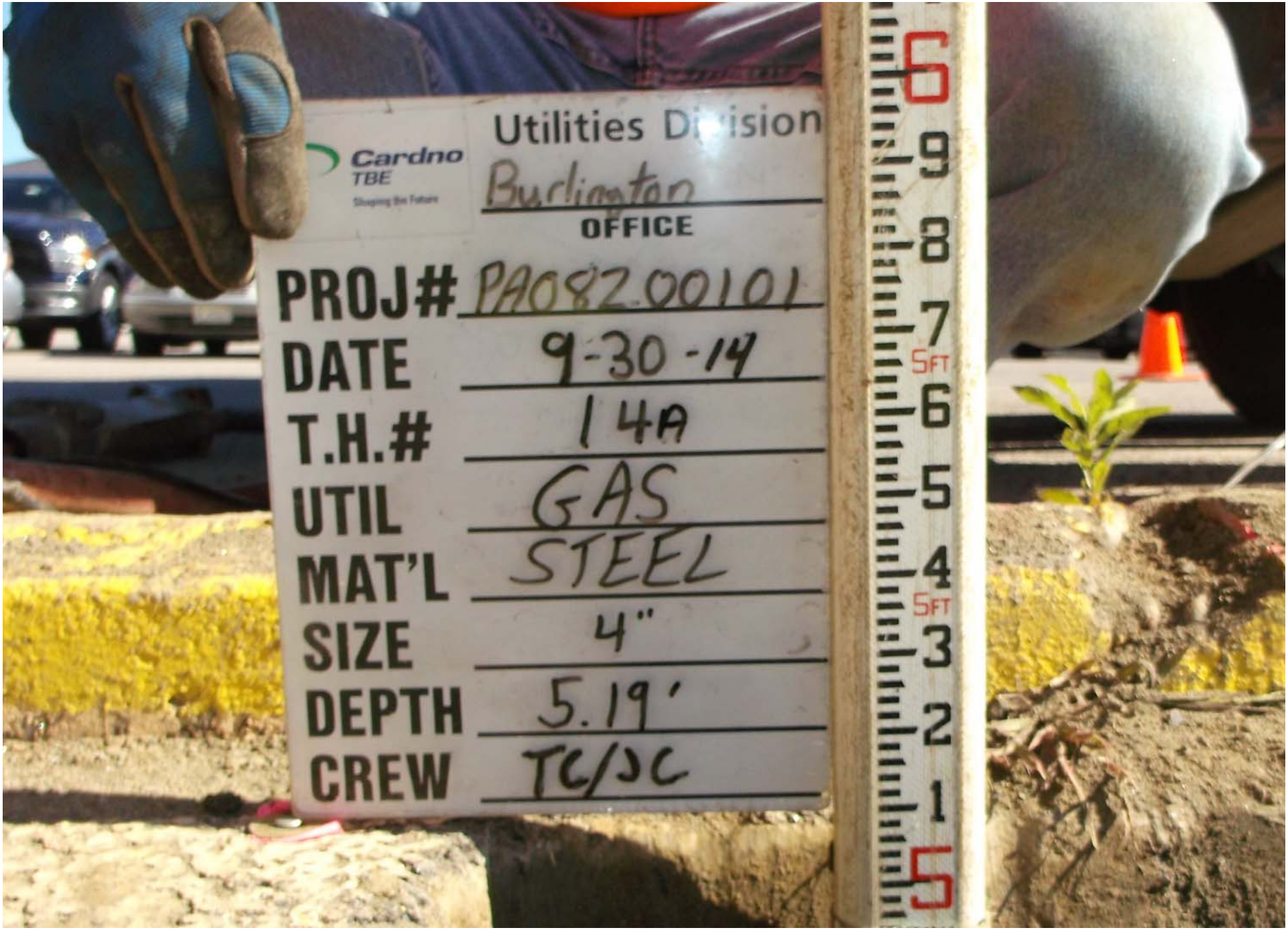

Test Hole 14A Photo 3

Test Hole 14A Photo 4

Project Name: DLA Troop Support	**Subsurface Utility Engineering Test Hole Field Data**	TBE Office: Burlington, NJ
Project Number: PA08200101		Crew Leader: Caruso
Test Hole Date: 10-01-14		SUE Crew: Caruso/Conticchio
City-State: Philadelphia, PA		Truck No: 55-402
Location: DLA Troop Support HQ		Units: ☑English ☐Metric

TEST HOLE: 15
IDENTIFIED BY: Iron Rod and Cap

SURFACE ELEVATION: 111.25
SURFACE TYPE: Natural Ground
SURFACE THICKNESS: N/A
ROAD BASE THICKNESS: N/A

MANUAL DEPTH (TOP): 6.55'
TOP OF UTILITY ELEVATION: 104.70

UTILITY REQUESTED: Gas
UTILITY FOUND: Gas
UTILITY SIZE: 4.00"
UTILITY MATERIAL: Steel
SOIL CONDITIONS: Dry, Hard, Compact

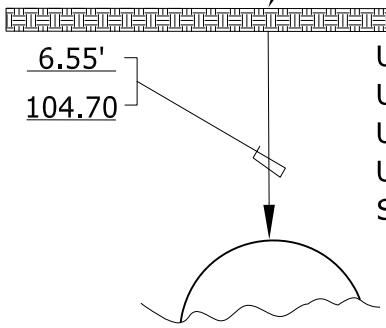

PROFILE VIEW - NOT TO SCALE

Note: Reference pin set over crown of pipe. Very hard compacted soil conditions.

BEP = Building Entry Point; EOI = End of Information; EORI = End of Records Information; EOWL = End of Work Limit

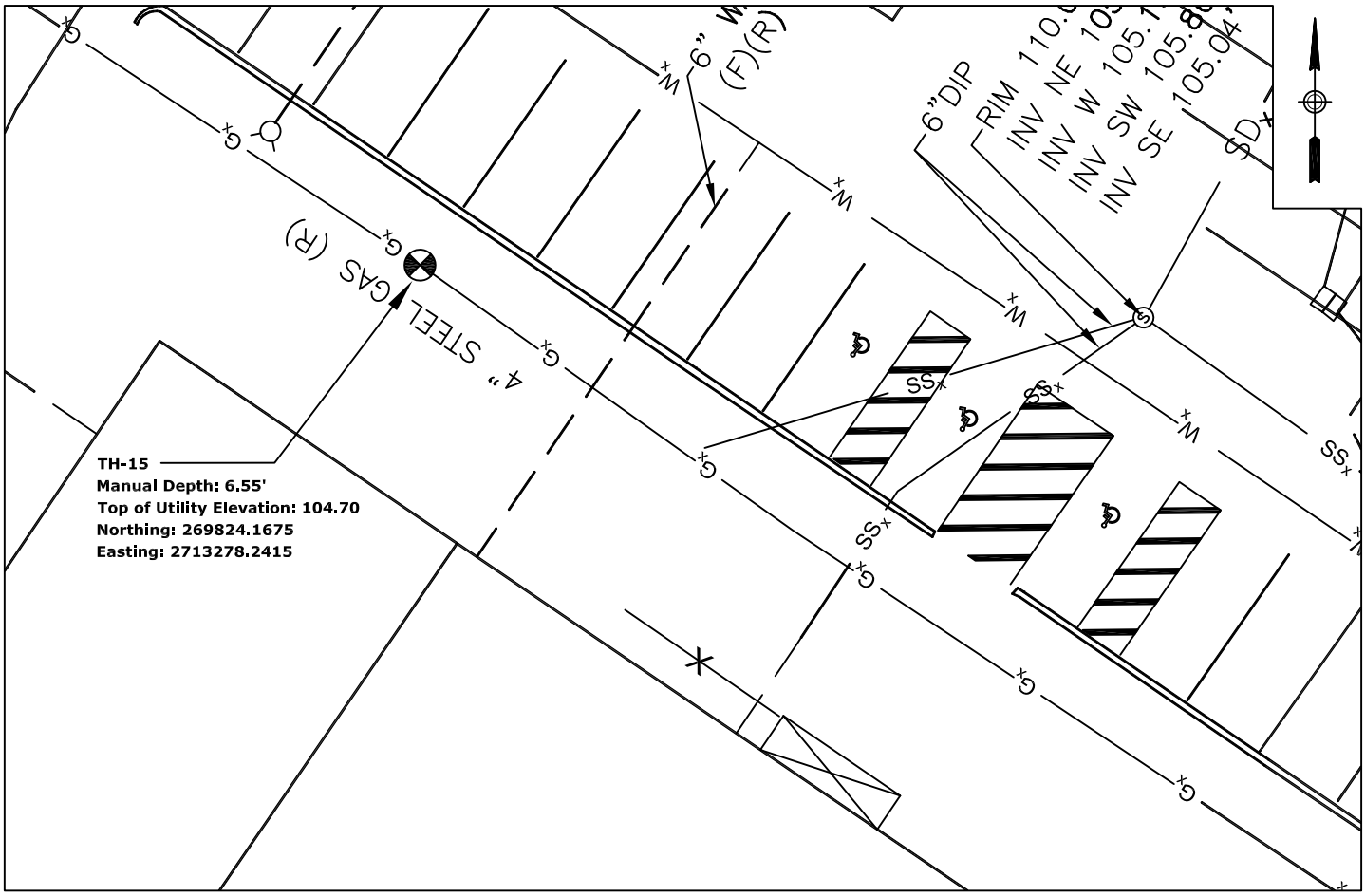

PLAN VIEW - NOT TO SCALE

SURVEYOR: Dawood PREPARED BY: Tony Harris CHECKED BY: Steve Myers

Test Hole 15 Photo 1

Test Hole 15 Photo 2

Test Hole 15 Photo 3

Project Name:	DLA Troop Support	TBE Office:	Burlington, NJ
Project Number:	PA08200101	Crew Leader:	Caruso
Test Hole Date:	10-02-14	SUE Crew:	Caruso/Conticchio
City-State:	Philadelphia, PA	Truck No:	55-402
Location:	DLA Troop Support HQ	Units:	☑English ☐Metric

Cardno TBE
Shaping the Future

Subsurface Utility Engineering
Test Hole Field Data

TEST HOLE:	16	SURFACE ELEVATION:	110.51
IDENTIFIED BY:	Nail/Disk	SURFACE TYPE:	Asphalt
		SURFACE THICKNESS:	4.50"
		ROAD BASE THICKNESS:	3.00"
MANUAL DEPTH (TOP):	4.83'	UTILITY REQUESTED:	Water
TOP OF UTILITY ELEVATION:	105.68	UTILITY FOUND:	Water
		UTILITY SIZE:	6.00"
		UTILITY MATERIAL:	Ductile Iron Pipe
		SOIL CONDITIONS:	Dry, Loose Clay

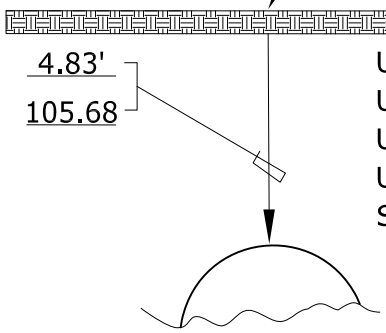

PROFILE VIEW - NOT TO SCALE

Note: Reference pin set over crown of pipe. Road base consists of stone. Three railroad ties were encountered at a depth of 20.00" +/-. Test hole revealed the bell of the pipe Manual depth to the bell of the pipe was 4.75' +/-.
BEP = Building Entry Point; EOI = End of Information; EORI = End of Records Information; EOWL = End of Work Limit

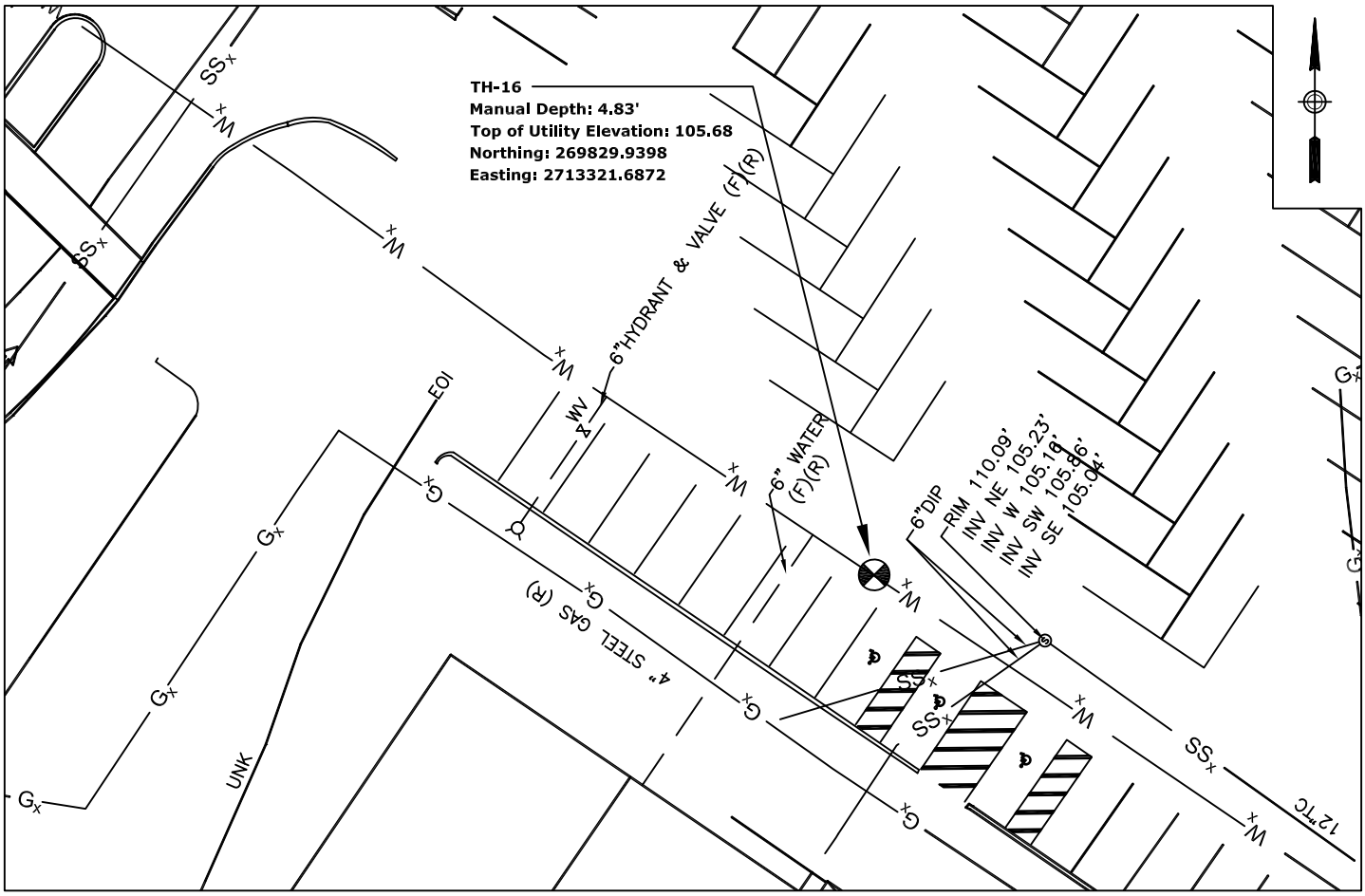

PLAN VIEW - NOT TO SCALE

SURVEYOR: Dawood PREPARED BY: Tony Harris CHECKED BY: Steve Myers

Test Hole 16 Photo 1

Test Hole 16 Photo 2

Test Hole 16 Photo 3

Test Hole 16 Photo 4

Project Name:	DLA Troop Support	TBE Office:	Burlington, NJ
Project Number:	PA08200101	Crew Leader:	Caruso
Test Hole Date:	9-30-14	SUE Crew:	Caruso/Conticchio
City-State:	Philadelphia, PA	Truck No:	55-402
Location:	DLA Troop Support HQ	Units:	☑English ☐Metric

Cardno TBE
Shaping the Future

Subsurface Utility Engineering
Test Hole Field Data

TEST HOLE: 17
IDENTIFIED BY: Nail/Disk

SURFACE ELEVATION: 108.10
SURFACE TYPE: Asphalt
SURFACE THICKNESS: 5.00"
ROAD BASE THICKNESS: 2.00"

MANUAL DEPTH (TOP): 2.64'
TOP OF UTILITY ELEVATION: 105.46

UTILITY REQUESTED: Water
UTILITY FOUND: Water
UTILITY SIZE: 6.00"
UTILITY MATERIAL: Ductile Iron Pipe
SOIL CONDITIONS: Compact, Hard Clay

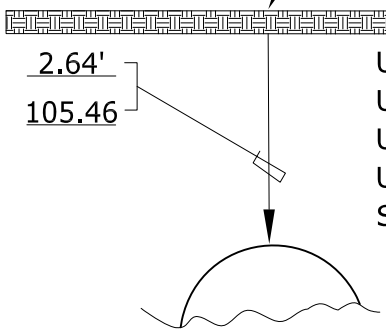

PROFILE VIEW - NOT TO SCALE

Note: Reference pin set over crown of pipe. Road base consists of compacted stone.

BEP = Building Entry Point; EOI = End of Information; EORI = End of Records Information; EOWL = End of Work Limit

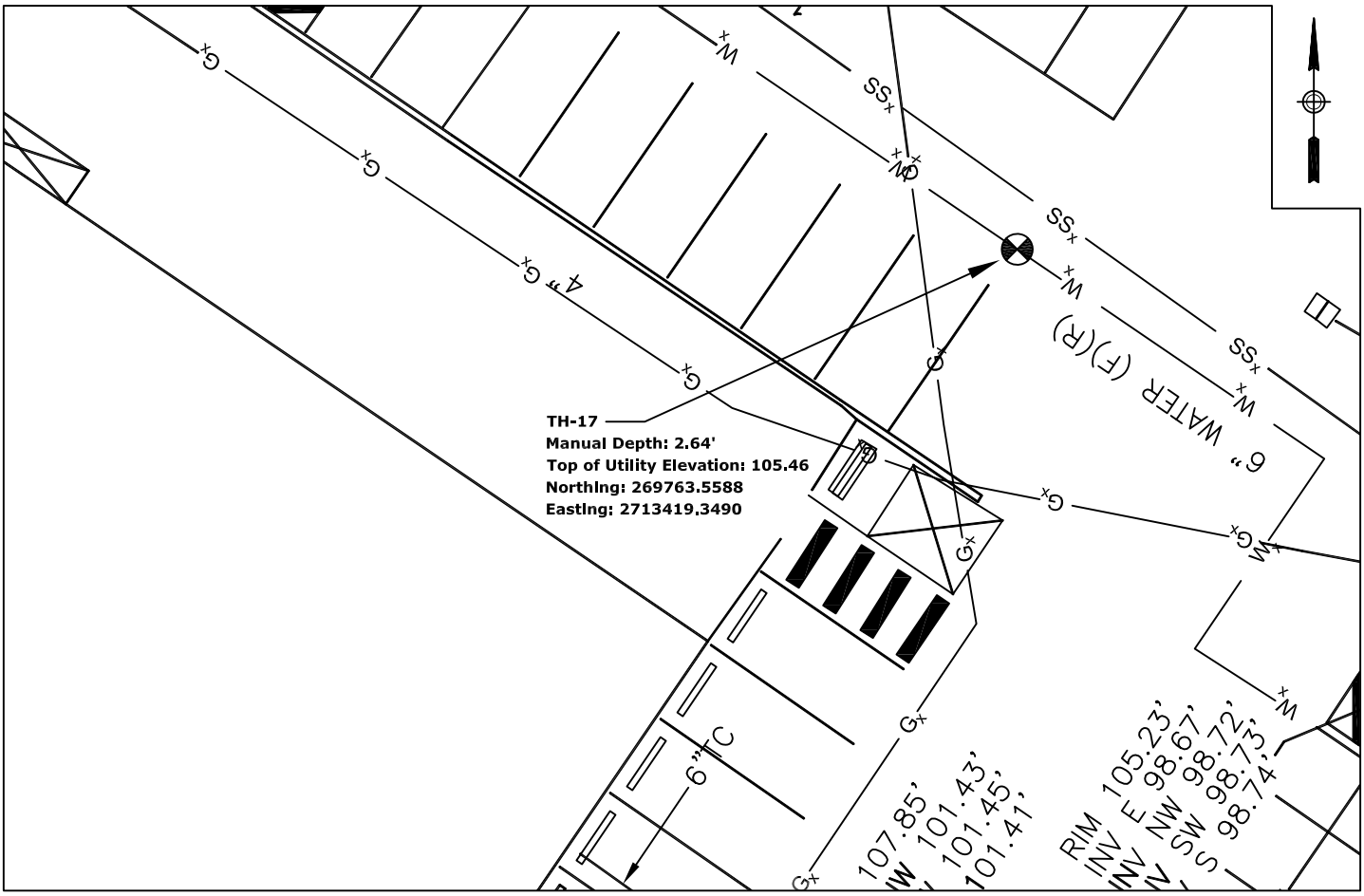

PLAN VIEW - NOT TO SCALE

SURVEYOR: Dawood PREPARED BY: Tony Harris CHECKED BY: Steve Myers

Test Hole 17 Photo 1

Test Hole 17 Photo 2

Test Hole 17 Photo 3

Test Hole 17 Photo 4

Project Name:	DLA Troop Support	TBE Office:	Burlington, NJ
Project Number:	PA08200101	Crew Leader:	Caruso
Test Hole Date:	10-03-14	SUE Crew:	Caruso/Conticchio
City-State:	Philadelphia, PA	Truck No:	55-402
Location:	DLA Troop Support HQ	Units:	☑English ☐Metric

Cardno TBE
Shaping the Future

Subsurface Utility Engineering
Test Hole Field Data

TEST HOLE: 18
IDENTIFIED BY: Iron Rod and Cap

SURFACE ELEVATION: 108.11
SURFACE TYPE: Natural Ground
SURFACE THICKNESS: N/A
ROAD BASE THICKNESS: N/A

MANUAL DEPTH (TOP): 12.70'
TOP OF UTILITY ELEVATION: 95.41

UTILITY REQUESTED: Sanitary
UTILITY FOUND: See Note
UTILITY SIZE: See Note
UTILITY MATERIAL: See Note
SOIL CONDITIONS: Compacted, Rock, Clay

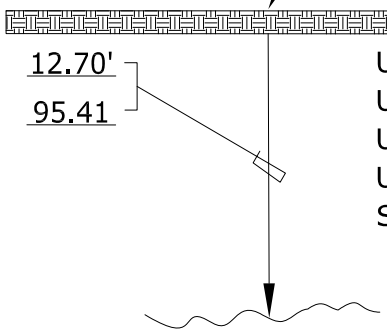

PROFILE VIEW - NOT TO SCALE

Note: Reference pin set over center of test hole. Excavated to a depth of 12.70', unable to excavate further due to size of rocks being extracted.
BEP = Building Entry Point; EOI = End of Information; EORI = End of Records Information; EOWL = End of Work Limit

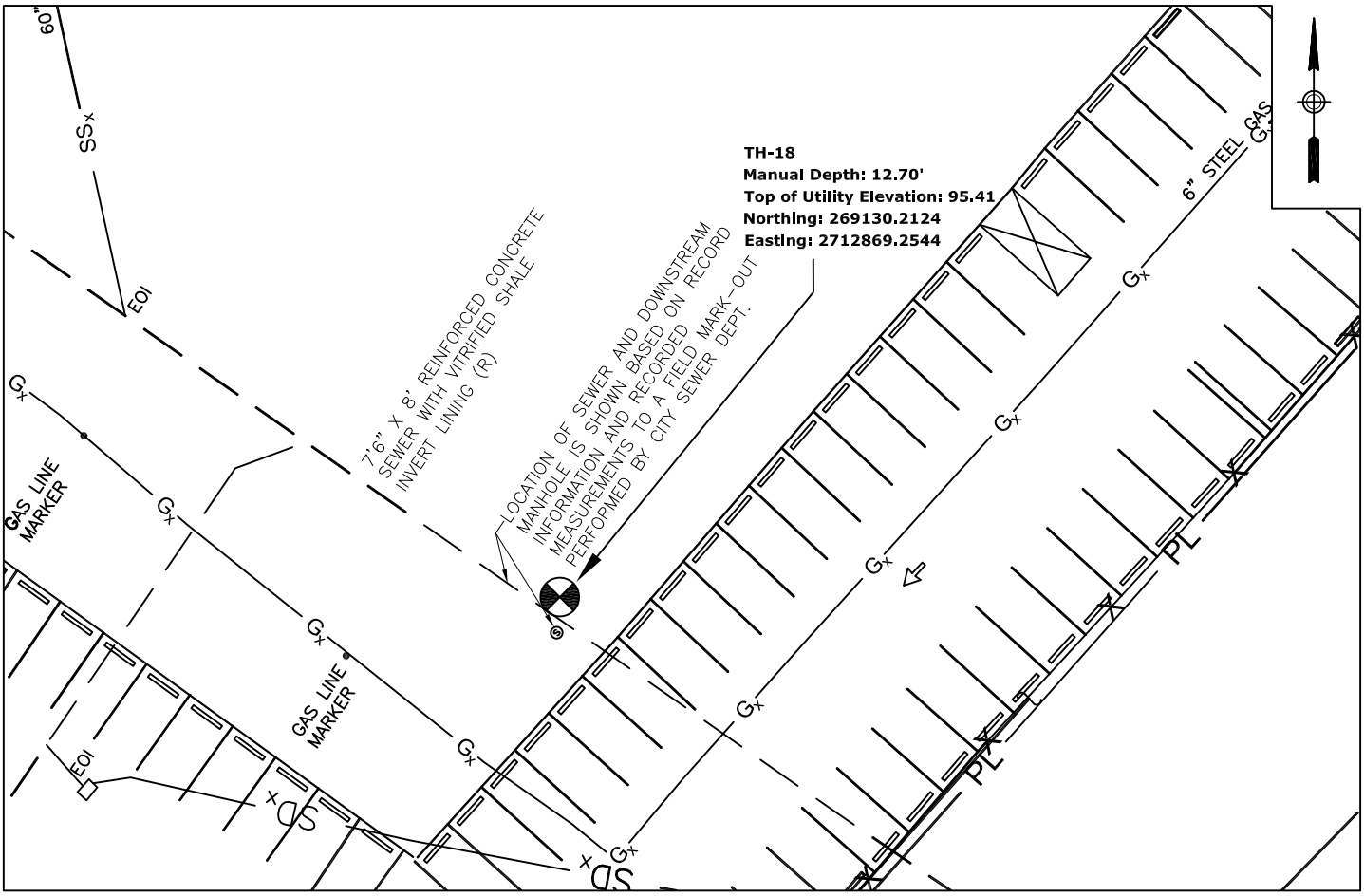

PLAN VIEW - NOT TO SCALE

SURVEYOR: Dawood PREPARED BY: Tony Harris CHECKED BY: Steve Myers

Test Hole 18 Photo 1

Test Hole 18 Photo 2

Test Hole 18 Photo 3

Test Hole 18 Photo 4

Test Hole 18 Photo 5

PHOTOGRAPH 1

DESCRIPTION:

Test Pit - 1

Looking North

Test Pit Depth = ~8 ft

Notes:

Fill material with construction debris to ~6.5 ft.
1.5 inch thick layer of cinders at ~1.4 ft.
8 inch thick layer of cinders at ~2.1 to 2.8 ft.

PHOTOGRAPH 2

DESCRIPTION:

Test Pit - 1

Looking West

Test Pit Depth = ~8 ft

Notes:

Seepage at ~3.5 ft.

Schnabel ENGINEERING	**NAVFAC - NSA** **700 Robbins Street** **Philadelphia, Pennsylvania** **PROJECT NO. 13615018**	**TEST PIT PHOTOGRAPHS** **OCTOBER 3, 2013**

© Schnabel Engineering 2013 All Rights Reserved

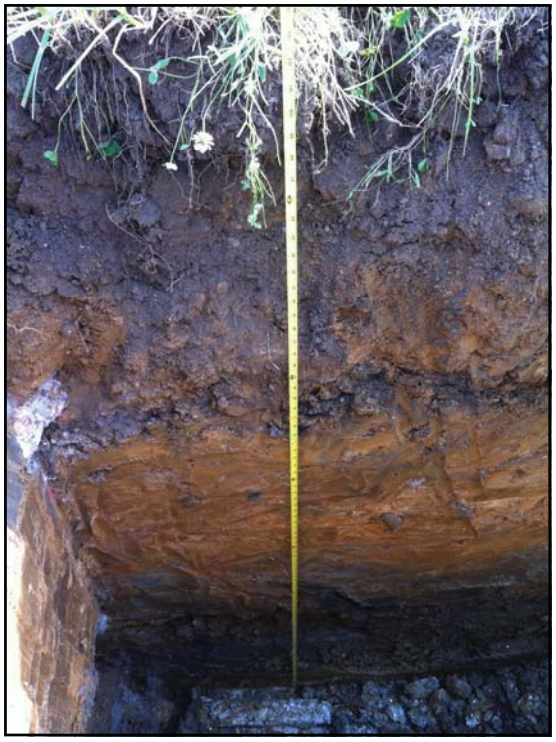

PHOTOGRAPH 3

DESCRIPTION:

Test Pit - 2

Looking East

Test Pit Depth = ~8.5 ft

Notes:

Fill/alluvial break at ~4 ft.

PHOTOGRAPH 4

DESCRIPTION:

Test Pit - 2

Test Pit Depth = ~8.5 ft

Notes:

Chunk of concrete at ~1.8 ft.

Schnabel ENGINEERING	**NAVFAC - NSA** **700 Robbins Street** **Philadelphia, Pennsylvania** **PROJECT NO. 13615018**	**TEST PIT PHOTOGRAPHS** **OCTOBER 3, 2013**

© Schnabel Engineering 2013 All Rights Reserved

PHOTOGRAPH 5

DESCRIPTION:

Test Pit - 2

Spoils

Test Pit Depth = ~8.5 ft

Notes:

Residual material from ~7.5-8.5 ft.

PHOTOGRAPH 6

DESCRIPTION:

Test Pit - 3

Looking East

Test Pit Depth = ~10 ft

Notes:

Bottom of fill at ~8 ft.

© Schnabel Engineering 2013 All Rights Reserved

PHOTOGRAPH 7

DESCRIPTION:

Test Pit - 3

Spoils

Test Pit Depth = ~10 ft

Notes:

Spoils from ~4 ft containing wood

PHOTOGRAPH 8

DESCRIPTION:

Test Pit - 4

Looking Southwest

Test Pit Depth = ~7 ft

Notes:

Bottom of fill at ~2 ft.

© Schnabel Engineering 2013 All Rights Reserved

PHOTOGRAPH 9

DESCRIPTION:

Test Pit - 4

Looking Northwest

Test Pit Depth = ~7 ft

Notes:

Alluvial soils from ~2 to 6 ft.

PHOTOGRAPH 10

DESCRIPTION:

Test Pit - 4

Spoils

Test Pit Depth = ~7 ft

Notes:

Alluvial material from ~2-3 ft.

© Schnabel Engineering 2013 All Rights Reserved

PHOTOGRAPH 11

DESCRIPTION:

Test Pit - 5

Looking South

Test Pit Depth = ~4.5 ft

Notes:

Fill material containing construction debris to ~ 2 ft.

PHOTOGRAPH 12

DESCRIPTION:

Test Pit - 5

Looking North

Test Pit Depth = ~4.5 ft

Notes:

Alluvial layer from ~2-4 ft.

© Schnabel Engineering 2013 All Rights Reserved

PHOTOGRAPH 13

DESCRIPTION:

Test Pit - 5

Spoils

Test Pit Depth = ~4.5 ft

Notes:

Spoils from excavation to 2 ft.

PHOTOGRAPH 14

DESCRIPTION:

Test Pit - 6

Looking Southeast

Test Pit Depth = ~3 ft

Notes:

Fill material containing coal, concrete, and brick fragments.

© Schnabel Engineering 2013 All Rights Reserved

PHOTOGRAPH 15

DESCRIPTION:

Test Pit - 7

Looking East

Test Pit Depth = ~3 ft

Notes:

Bottom of fill at ~2.5 ft.

PHOTOGRAPH 16

DESCRIPTION:

Test Pit - 8

Looking North

Test Pit Depth = ~4 ft

Notes:

Fill material containing brick fragments. 12 inch wide concrete structure across bottom of test pit.

© Schnabel Engineering 2013 All Rights Reserved

PHOTOGRAPH 17

DESCRIPTION:

Test Pit - 8

Debris

Test Pit Depth = ~4 ft

Notes:

Steel pipe from ~2 ft depth.

PHOTOGRAPH 18

DESCRIPTION:

Test Pit - 8

Bottom of Pit

Test Pit Depth = ~4 ft

Notes:

12 inch wide concrete structure across bottom of test pit.

© Schnabel Engineering 2013 All Rights Reserved

GEOPHYSICAL STUDY REPORT
FINAL SUBMITTAL

NAVFAC DLA Troop Support Headquarters
700 Robbins Street
Philadelphia, Pennsylvania

Schnabel Reference 13615018
July 15, 2014

Schnabel
ENGINEERING

July 15, 2014

Mr. Richard Flickinger
STV Incorporated
205 West Welsh Drive
Douglassville, PA 19518

Subject: **Geophysical Study Report, Naval Facilities Engineering Command (NAVFAC) Defense Logistics Agency (DLA), Troop Support Headquarters Facility, Navy Support Activity (NSA), Philadelphia, Pennsylvania (Schnabel Reference 13615018)**

Dear Mr. Flickinger:

SCHNABEL ENGINEERING CONSULTANTS, INC. (Schnabel) is pleased to submit our geophysical study report for this project. This document includes tables, figures, and appendices with relevant data collected for this study. This study was performed in accordance with our agreement dated August 27, 2013. This document is a companion report to the Geotechnical Report prepared by Schnabel dated October 29, 2013. Our proposal dated July 17, 2013, defines the scope of services for this project.

EXECUTIVE SUMMARY

This report presents the results of geophysical subsurface exploration and analysis for the proposed headquarters structure site. Based on our investigation and the project data furnished to us, we have developed the following summary of our major conclusions. Details are presented in the body of the report.

The EM results show many utilities, areas with reinforced concrete, and remnants of the former railroad track bed. We did not observe other regions of the subsurface with large amounts of metallic debris fill within the areas we investigated with EM, nor did we observe storage tanks.

In the GPR data, we observed areas with reinforced concrete beneath the asphalt, an area of the parking lot with un-reinforced concrete underlying the asphalt, and an area with a linear feature, possibly a former concrete foundation. We observed an anomaly in line with the former railroad tracks that may indicate denser fill with some metallic debris.

schnabel-eng.com
T/ 610-696-6066 F/ 610-696-7771
1380 Wilmington Pike, Suite 100 / West Chester, PA / 19382

The MASW profiles indicate a deep weathering profile within the bedrock and regions of softer/looser zones within more stiff rock, and a greater depth to bedrock on the south side of Line 1, which corresponds well with the results of B-2 where disintegrated rock material was not encountered to the depth investigated. The MASW results indicate there is greater variability in the subsurface than is indicated by the test borings.

The MASW for IBC site class investigation and analysis indicates the site is classified as a Seismic Site Class C.

We are providing this executive summary solely for purposes of overview. Any party that relies on this report must read the full report. This executive summary omits several details, any one of which could be very important to the proper application of the report.

PROJECT DESCRIPTION

The site is about five acres in size, and consists of a grassy area and existing parking lots located adjacent to Buildings 2, 3, 4, 12, and 36 on the NAVFAC NSA Philadelphia campus. A Site Vicinity Map is included as Figure 1. Approximately two acres of the site are grass covered, and include several trees, a single slab-on-grade residence structure, and associated sidewalks. Two large parking lots are located in the northwest and northeast of the site, with active parking areas and roads along the southwestern and southeastern borders of the site. Grades across the site are generally flat, though slope to the south, with elevations ranging from about EL 110 to 106.

Schnabel obtained the site information from a schematic utility site plan marked up by NAVFAC, a work-in-progress topographic survey site plan provided by STV Incorporated (STV), and through our site visits.

Proposed Construction

The overall project includes the design of a 108,000 gross square foot headquarters building and demolition of existing Building 36 following completion of the new facility. The proposed headquarters building is anticipated to range from a two- to five-story structure that may include a basement. If a basement is not included, the finish ground floor elevation is anticipated to be within two feet (±) of existing site grades. If a basement is included, the lowest finished floor elevation is anticipated to be approximately eight to ten feet below existing site grades. Further description of the proposed construction is included in our Geotechnical Report.

Project details above were provided by the Scope of Work and through discussions with Ms. Cindy Manning and Mr. Richard Flickinger of STV. At the time of this report, no building plans or foundation plans were available to us.

HISTORICAL DOCUMENT REVIEW

A review of readily available historical records was conducted for the project site to identify past site usage and other pertinent information, which could impact site development. The complete set of findings is discussed in our Geotechnical Report. Copies of relevant historical records are presented in our Geotechnical Report.

©2014 All Rights Reserved

In summary, the historical information provides very little data about the site prior to 1942, at which time the current facility was under construction. One former site use indicates a set of railroad tracks cutting across the site to the north, and our findings below indicate remnants of the track bed in the former track area.

One notable finding from the historical review is that a map of the distribution of fill in the Philadelphia area indicates there may have been a streambed that is now buried but that extended apparently east-west along the southern corner of the site. The scale of the map is small; therefore, the resolution is low, and the actual location of the former stream is approximate. We overlaid the map directly on the site plan, as shown on Figure 2, Boring & Test Pit Location Plan, in order to observe the possible location. The former streambed is located to the south of B-1 and TP-1, outside the extent of the intrusive investigations conducted for this project, and we did not observe signs of an infilled streambed in our intrusive locations. The soil at Test Pit TP-1 contained layers of cinders and ash, and while it was common to fill streambed valleys in the region with this material, neither our test pits nor our geophysical investigation findings indicate evidence of a former streambed. Photos of the test pits are included in the Geotechnical Report.

GEOPHYSICAL EXPLORATION PROGRAM

The objective of the geophysical investigations is to identify and document the location of underground anomalies associated with previous site developments (i.e., underground utilities, vaults, storage tanks, foundations, and uncontrolled rubble or fill). Although it is not the specific intent of this investigation, utilities encountered within the search area were also identified and documented, where possible.

The four corners of the geophysical work area and some existing subsurface utilities were marked on the site with paint and flags by others prior to our on-site geophysical investigations. The geophysical work area is shown on Figures 3 through 9. We collected data beyond the boundaries of the geophysical work area, where space allowed, to provide complete coverage across the work area boundary. We are providing the full extent of the data we collected, including outside the geophysical work area boundary.

We understand that the site utility survey was ongoing concurrently with our geophysical explorations, and additional utilities were identified as the overall project progressed. We were provided with draft topographic and utility plans for analysis purposes: one is included on our Figures 3 through 9, and we will incorporate the final site plan, if available, in our final figures.

The geophysical exploration program included four non-invasive technologies: two electromagnetic investigations (frequency domain and time domain, using Geonics EM31 and EM61 instruments, respectively), ground-penetrating radar (GPR), and 2-D Multi-channel analysis of surface waves (MASW). Discussions of each technology and the data collection methods are presented in the following sections.

Electromagnetic Survey

We performed two electromagnetic investigations on September 7 and 8, 2013, using a Geonics Ltd. EM31 terrain conductivity meter and a Geonics Ltd. EM61-mk2 time-domain metal detector (EM61). The specific locations where we collected both EM data sets are included in Figure 3, Geophysical Investigation Location Plan. Locations where there is no data coverage indicate that surface obstructions

©2014 All Rights Reserved

prevented access to those areas, specifically around the residence structure, large vegetation, and the chain-link fence areas.

We collected differential global-positioning system (DGPS) data using a Trimble Pro-XRT system simultaneously with both the EM31 and the EM61 data. Both the EM and DGPS data were recorded digitally using a data logger and later transferred to a computer for processing. Lateral accuracy using this method is dependent on the DGPS positioning accuracy, and for this survey is about 3 ft.

The EM31 and EM61 instruments measure properties of the subsurface while being carried and operated by a single operator. As per standard operating procedure, the EM31 and EM61 were calibrated at the same location each day as outlined in the operating manuals, to confirm that the instruments were working properly, and to avoid baseline shifts in the data.

We imported the EM data and positions into Surfer (v. 11, Golden Software, Inc. 2013) for contouring. The results are the plan view contour plots shown on Figures 4 through 7.

EM31

The EM31 data were collected while carrying the instrument at a walking pace along approximately parallel survey lines, spaced about 20-ft apart, and generally oriented approximately NW-SE across the site. We collected data along a total of about 12,000 linear feet of survey lines.

The EM31 instrument works by inducing an electric current into the ground, and measuring the amplitude of the response of the subsurface. An alternating current is passed through a transmitter coil, creating an electromagnetic field that expands and collapses with the alternating current. This changing field induces a current in the subsurface, which in turn creates its own secondary electromagnetic field. The secondary field formed in the subsurface will be directly proportional to the conductivity of the ground. Both the transmitter's and the ground's electromagnetic fields are detected by the receiver.

The conductivity of the subsurface is calculated based on the magnitude of the response. The conductivity measurement is also a weighted average of the bulk conductivity over the depth of influence of the instrument. The depth of influence of the EM31 is about 15 to 18 ft, with a maximum response from a depth of about 5 ft when the instrument is used such as it was for this project.

There are two portions of the EM response that we measure: the first ("quadrature" results) directly corresponds to conductivity and the other, the "in-phase" results, corresponds only to very conductive materials such as metal. We provide the "in-phase" EM31 results on Figure 4, and "quadrature" results on Figure 5. The in-phase results are reported as response, in parts per thousand (ppt); and the quadrature results are reported as conductivity measurements in units of millimhos per meter (mmhos/m), which is the inverse of resistivity (ohm-meters).

Figures 4 and 5 contain several areas where the values are negative. These indicate highly conductive objects, such as metal utilities, and occur because of the interaction between the quadrature and in-phase portions of the data described above.

©2014 All Rights Reserved

EM61

The EM61 data were collected while moving the instrument at a walking pace along approximately parallel lines, spaced approximately 5-ft apart, and generally oriented approximately NW-SE across the site, for a total of about 47,000 linear feet of survey lines.

The EM61 is a metal detection system that induces an electric current into the ground, measures the response of the subsurface in terms of millivolts (mV), and is sensitive to very conductive objects such as metal. Larger objects or objects that are near the ground surface will produce larger responses than smaller and/or deeper objects. Data is collected in several ways using two sensors, one above the other, to help provide multiple perspectives on the subsurface materials.

We provided “channel 1” results on Figure 6, and “differential” results on Figure 7. The channel 1 results represent all the metallic objects that the instrument could possibly detect, including strong responses from objects on or near the ground surface. The differential results generally represent the presence of larger and/or deeper metallic objects. The resolution of the EM61 is such that a metallic object the size of a 55-gallon drum is generally detectable at a depth of about 10 ft. Larger responses normally represent larger and/or shallower objects. Small responses represent smaller and/or deeper objects.

EM Results

Figures 4 and 5 show the EM31 results; Figures 6 and 7 show the EM61 results. We identified the anomalies by number and list them in Appendix A, Table A (EM31 Anomalies) and Table B (EM61 Anomalies).

Tables A and B include a note about the probable cause of the anomaly based on the EM response, our visual observations while on site, and correlation with site drawings provided by others. We include a note about the possible cause of the anomalies for those that are not clearly identified. We also investigated several anomalies and broad zones of EM differences with GPR and test pits.

In general, most of the EM anomalies are the result of known and/or visually observed features, such as buried utilities or metal signs, etc. However, several anomalies are not clearly caused from a known feature, and these are shown on Figure 8, EM Summary Results. Several anomalies occur in both the EM31 and EM61 results, and the overlapping regions are included on Figure 8.

Several anomalies (EM31 Anomalies 18, 53, 73) are along known utilities, but they do not have a constant response along the suspected utility. We interpret these anomalies to be from the utilities, and that the variance in the anomaly appearance is due to the orientation of the EM31 instrument with respect to the utility and its distance to the utility.

EM61 Anomalies 4/68, 14/78, 16/80, 22/85, 23/86, 38/95 indicate buried metal that is probably related to utilities. These anomalies are located along known utilities, and may indicate valve covers or shallower metal components of the utility than are located in areas where an anomaly is not observed along the utility. These anomalies may also be caused by variations in the EM61 results due to location of the instrument over the feature.

©2014 All Rights Reserved

We interpret that EM31 Anomalies 4 and 14, and 36, 37, and 50 are related to the same electric line, though they appear as separate anomalies due to gaps in the EM31 data coverage due to vegetation.

We interpret there is a utility vault at the locations of EM31 Anomaly 15/51 and EM61 Anomaly 25/87. The EM anomalies are high response, and located along the steam line and adjacent to an electric line junction.

EM31 Anomaly 30/67 and EM61 Anomaly 56/110 were investigated with GPR and are adjacent to TP-5. The GPR results indicate that in this area there is a linear subsurface feature: possibly concrete, or possibly a former foundation. Slag was also observed on the ground surface in this area, as well as in the subsurface in TP-5 and B-12.

EM31 Anomaly 54 is along the former railroad track bed, and the broad EM anomaly may be related to small amounts of debris or slag along this area.

Several anomalies are observed in the EM61 channel 1 results (EM61 Anomalies 17, 18, 27, 28, 29, 30, 32, 39, 50, 51), but have a much lower response in the EM61 differential results, indicating they are likely the result of shallow buried metallic debris, such as the isolated metal pipe piece encountered in TP-8.

We investigated several anomalies located to the southwest of the site near the CUP (EM31 Anomalies 40 and 41, EM61 Anomaly 10) with GPR. The GPR results show there is reinforced concrete beneath the asphalt in this area.

We did not observe broad regions of the subsurface with large amounts of metallic debris fill within the areas we investigated with EM, nor did we observe underground storage tanks.

In some instances, the manholes (and other surface features) that we detected using the EM differ slightly from the locations of the corresponding manholes (and other surface features) shown on the surveyed topographic plan provided by STV. The possible reasons for this are:

1) Contouring between individual geophysical (EM) survey points may produce a slight offset to an anomaly. We may have interpreted the center of the object slightly to one side or the other depending on data coverage.
2) The actual location of the object may be different than the location on the drawing. Verification should be performed to determine which location is correct. However, the most recent surveying will be more accurate than the geophysical GPS locations.

In cases where the geophysical location of a feature is offset slightly from the surveyed location, the surveyed location should be considered more accurate, and the geophysical location should be considered a “verification” that the feature is really there.

Ground Penetrating Radar (GPR) Survey

We performed a GPR survey on September 14, 2013, using a Geophysical Survey Systems, Inc. (GSSI), SIR-3000 system and a 400 MHz antenna. The GPR data were collected along linear transects, spaced 40-ft apart and generally oriented approximately NW-SE across the site, several SE-NW across the site, and several at other orientations to investigate specific EM anomalies, for a total of about 7,000 linear feet

©2014 All Rights Reserved

of survey line. The start and end-point locations of the GPR traverses were obtained with a DGPS system. The locations are shown on Figure 3 and Figure 9, GPR Results. GPR Results Example Profiles are included on Figure 10.

The GPR transmitter in the antenna sends an electromagnetic radar wave out, and the receiver in the antenna detects echo responses from targets in its path. For GPR, reflectors may include pipes, voids, bedrock, gravel layers, metal debris, steel reinforcing in concrete, etc. The wave partially reflects off interfaces between materials with different dielectric values (electrical permittivity), and partially transmits through it (with the exception of metallic objects, which do not transmit the wave). Greater differences between two dielectric values generate greater reflections. The return signal amplitude is recorded with the time it was received after it was transmitted, and is displayed with time on the vertical scale.

We used a specialized GPR processing program, Radan (v. 6, GSSI) for our in-office GPR data analysis. The time scale may be converted to estimated depth by correlating to objects of known depth, determining the velocity of the transmitted wave in the material empirically, or estimating material parameters and calculating the wave's velocity. In order to calculate depths to features we observed in the GPR data, we estimated a dielectric constant, which determines the wave speed in a medium for the typical material expected to underlay the site (silts, sands, and some clay). We calculated depths using a dielectric constant of about 8 for soil. Some variation between the depths presented here and the actual depths encountered should be expected due to variations in the material's electrical properties. We observed good signal penetration to about 50 nS at the site, which corresponds to an estimated depth of penetration of about 6 ft.

We observed features in the data individually to determine if their characteristics, including the shape and amplitude, are similar to those seen for cultural features. We also consider the orientation of the traverse with respect to the anticipated object since a linear feature, such as a metal pipe, will show as a characteristic reflection when crossed perpendicularly, but will provide a less obvious reflection when paralleled or crossed obliquely.

It should be noted that the GPR signal does not penetrate metallic objects such as manhole covers and sheet metal, and we cannot observe features directly beneath metallic objects. Smaller metallic objects, such as pipes or reinforcing steel, reflect part of the GPR signal and allow the remainder of the GPR signal to pass around the object, penetrating deeper into the subsurface.

GPR Survey Results

Results from the GPR investigation are shown on Figure 9, GPR Results. Example GPR profiles are included on Figure 10. The locations of features we observed in the GPR data that might be caused by rubble, debris, or other subsurface features from previous site uses are included on Figure 9.

We observed reinforced concrete beneath the asphalt at the location of EM31 Anomalies 7 and 8, and EM61 Anomaly 10 near the CUP plant. These reinforced concrete areas may be related to the adjacent drain pit, although they are not indicated on site plans we have received.

The former railroad tracks that were observed on the historical aerial photos and plans appear to have been removed, as we did not observe an EM anomaly (EM31 Anomaly 54) in these areas. However, we do observe remnants of the track bed in the EM and GPR results. The anomalies may be indicating more

©2014 All Rights Reserved

dense or different fill in this area, and it likely contains slag, or other metallic debris. The outlines of the anomalies that are likely related to the former track bed are included on Figure 9.

Test Boring B-14 encountered concrete beneath the asphalt. The GPR results in the parking area around B-14 include an anomaly that indicates the extent of the concrete. The outline of this area is included on Figure 9. We did not observe reinforcing in the concrete in the GPR nor the EM data.

We observed several anomalies along the perimeter road along the southeast site boundary that look similar to the concrete underlay area; however, we do not have intrusive investigation data along this road to confirm this. The anomalies along the road may also be caused by a dense subbase underlay, or other planar feature beneath the asphalt. We did not observe anomalies indicating steel reinforcing in this area.

We investigated EM31 Anomaly 17 and EM61 Anomaly 18 with GPR, and observed a high reflector that was later found to be caused by layers of cinder, ash, and clay observed in TP-1. We observed several areas with high-amplitude reflections in the GPR data that we believe are caused by material variations in the fill.

We did not observe large zones of loose rubble, tanks, vaults, or other unexplained subsurface features in the areas we investigated with GPR.

MASW Profiling Survey

We performed an MASW profiling survey on September 28, 2013. The purpose of the survey was to help characterize near subsurface soils. MASW data were collected along two NE-SW linear traverses (MASW Line 1 and MASW Line 2) for a total linear length of 630 ft. Line 1 extended from soil Boring B-2 to about 35 ft beyond soil Boring B-14. Line 2 extended from soil Boring B-1 to about 15 ft beyond soil Boring B-7. The MASW Line 2 was truncated from the original proposed extent due to obstructions of the house and heavy vegetation between B-7 and B-13. The locations of the MASW traverses are shown on Figure 3, and the results are shown on Figure 11.

We collected the MASW data using a Geometrics, Inc., Geode, 24-channel seismograph, and an array with twenty-four 4.5 Hz geophones. The geophones were placed at 5-ft intervals along a linear traverse and collected data in a common-midpoint arrangement with the energy source offset from the end of the geophone line by 15 ft. After collecting data with that arrangement at a single location, the geophones and source were moved forward 10 ft, and data was collected again. We used a Propelled Energy Generator (PEG) source mounted on the hitch of a pick-up truck to strike a steel plate and create the energy source. The seismic data were recorded digitally directly onto a laptop computer that controlled the seismograph.

MASW analyses on collected seismic data were performed using a surface wave recognition and modeling program (SurfSeis©, Kansas Geological Survey). The data for each source/receiver array location were processed, and then modeled using an inversion method to estimate the subsurface shear wave velocities. The inversion models from each source/receiver array location were combined to form a two-dimensional cross-section model of the subsurface shear wave velocity for each MASW traverse.

©2014 All Rights Reserved

The root mean square (RMS) error in the modeled MASW data is generally low, and there is generally less than about ±50 ft/s shear wave velocity variation expected in the data. This variation does not change our interpretations.

Shear waves are directly related to the elasticity, or stiffness, of the subsurface. Elastic materials, such as intact bedrock (and more gneiss-like and quartzite bedrock), are stiff and transmit shear waves very quickly. Less elastic materials, such as soil (and more schist/phyllite bedrock), are softer and transmit shear waves slowly.

The velocity of surface waves is dependent on the material through which they pass, and the resulting velocity is a weighted average from the volume of material within the wavelength. The result of this is some averaging of shear wave velocities beneath the line of geophones and to either side of the line. Therefore, although the data is depicted as two-dimensional cross-sections, there may be some effects in the data from either side of the line. The resolution of the geophysical method may be such as to not detect potentially significant small features.

MASW Profiling Results

The MASW profiling results are shown as profiles on Figure 11. The results agree well with the depth to bedrock encountered: generally the depth where disintegrated rock was encountered in the test borings corresponds with a shear wave velocity of about 900 to 1,200 ft/sec. These velocities agree well with soft, partially weathered rock, and also with stiff soil.

In general, the profiles indicate a deep weathering profile within the bedrock and regions of softer/looser (low velocity) zones within more stiff (higher velocity) rock. We interpret these to be typical variations in the Wissahickon Formation, though the MASW results indicate there is greater variability in the subsurface than is indicated by the test borings. Our test boring results indicate the rock cored in B-12 is gneiss, and our experience in the Wissahickon Formation is that there are often variations of sapprolite, gneiss, schist, and quartzite. Each of these rock types has a different stiffness, and the MASW results are showing this variability.

We also observe a greater depth to bedrock on the southern end of Line 1, which corresponds well with the results of B-2 where disintegrated rock material was not encountered to the depth investigated.

Seismic Site Classification Based on Shear Wave Velocity

Schnabel performed a shear wave velocity investigation and analysis to evaluate the Seismic Site Class. This testing was performed in accordance with ASCE 7 Table 20.3-1 as referenced in IBC 2012 1613.3.2.

The objective of the seismic site classification study is to provide shear wave velocities within the subsurface to a depth of 100 ft below the base level of the proposed structure (to about 100-ft depth), to support development of a seismic site classification in accordance with the International Building Code (IBC). The seismic base elevation is “the level at which the horizontal seismic ground motions are considered to be imparted to the structure” (2006, ASCE/SEI 7-05, *Minimum Design Loads for Buildings and Other Structures,* Structural Engineering Institute of the American Society of Civil Engineers), and is the depth from which the 100-ft average shear wave velocity is calculated to determine Seismic Site Classification. We assumed a seismic base elevation of 100 ft for this investigation, based on the

©2014 All Rights Reserved

structure not having a basement, and with the finished floor elevations being approximately at existing grade.

We collected shear wave data at three locations, shown on Figure 3, for the specific purpose of evaluating shear wave velocity with depth for IBC Seismic Site Classification. IBC-1A is located near B-5; IBC-2A is located near B-7; and IBC-2B is located near B-1. Test boring results from the Geotechnical Investigation were used for correlation with the shear wave velocity profiles. N-values are plotted on the shear wave results (Figure 12), and the test boring logs are included in the Geotechnical Report.

We collected both active-source and passive-source data for the IBC site classification. Active-source data refers to collecting vibration data that is generated using an impact mechanism on the ground surface of the site. We used a 12-pound sledge-hammer on a steel plate to generate vibrations for the active-source data, and hammered in line with the end of the sensor array at several offsets, ranging from 30 to 60 ft. Active-source data is commonly more accurate at shallower depths than passive-source data, and allows us to create a model of the subsurface that more closely represents the actual conditions at shallow depths. Passive-source data refers to collecting ambient vibration noise, including vibrations from vehicles along the nearby roadways and other unknown sources. Ambient noise very often contains vibrations with lower frequencies and larger wave lengths than can feasibly be generated by active sources at the site, which can help provide data at greater depths than with an active-source alone.

We processed the data using SurfSeis software, written by the Kansas Geological Survey, and we combined the active and passive-source data. The resulting computer models are one-dimensional profiles of seismic shear wave velocity with depth and are divided into discrete layers, each having its own shear wave velocity.

The average shear wave velocities presented in Table 1 were calculated in accordance with ASCE 7 Table 20.3-1 as referenced in IBC 2012 1613.3.2 based on modeled results from our MASW for the 100-ft depth section beneath the ground surface at each of the three locations. The results were compared with ASCE 7 Table 20.3-1.

Table 1: Table 20.3-1

Average Shear Wave Velocity Range for 100-ft Depth	Site Class
$V_s > 5{,}000$	A
$2{,}500 < V_s \leq 5{,}000$	B
$1{,}200 < V_s \leq 2{,}500$	C
$600 \leq V_s \leq 1{,}200$	D
$V_s < 600$	E

The layered model results and average shear wave velocity for each location are listed in Table 2. In accordance with Table 1, the average shear wave velocity values at the site are within the designation for Seismic Site Class C. The mean average velocity value at the site is 1,668 ft/sec.

©2014 All Rights Reserved

Table 2: MASW Shear Wave Velocity Layered Model Results

Location IBC-L1A		Location IBC-L2A		Location IBC-L2B	
Depth to Bottom of Layer (ft)	**Velocity (ft/s)**	**Depth to Bottom of Layer (ft)**	**Velocity (ft/s)**	**Depth to Bottom of Layer (ft)**	**Velocity (ft/s)**
0.8	833	0.9	820	0.4	785
1.8	841	2.0	1,010	1.0	798
3.0	728	3.0	1,347	2.0	1,009
5.0	640	5.0	617	3.0	889
7.0	758	7.0	532	4.0	794
9.0	962	10.0	736	5.0	756
12.0	1,047	13.0	918	7.0	747
16.0	910	18.0	957	9.0	1,046
21.0	734	23.0	1,177	11.0	1,333
27.0	819	30.0	1,487	15.0	1,224
34.0	1,552	38.0	1,634	19.0	1,069
44.0	2,035	48.0	1,863	24.0	1,554
56.0	1,840	61.0	2,223	30.0	2,285
70.0	1,275	78.0	2,651	38.0	2,131
88.0	3,016	97.0	4,567	48.0	2,474
100.0	3,016	100.0	4,567	100.0	2,474
Average Velocity	***1,429***	***Average Velocity***	***1,709***	***Average Velocity***	***1,868***
Site Class	***C***	***Site Class***	***C***	***Site Class***	***C***

The IBC does not provide explicit direction on how to manage multiple sets of shear wave velocity data, and the Geotechnical Engineer of Record, in coordination with the Structural Engineer of Record, should evaluate this information to use it as they deem acceptable.

Shear wave velocity profiles obtained from the MASW testing is provided in Figure 12. We also plotted the SPT “N” value from Test Borings B-1, B-5, and B-7 on the shear wave profile graph for general comparison, since the IBC locations were near these borings. It should be noted that some variation in blow count “N” values and shear wave should be expected due to variation in scale between drilling techniques and MASW relative sensitivities of earth material to blow counts, discretization of the subsurface shear wave model (i.e., the model is divided into thin discrete layers), and differences in volume sampling, etc.

Shear wave velocity measurements are generally preferred to as SPT N-values or shear strength testing for earthquake engineering evaluations. This is because in situ shear wave velocity measurements more directly represent the actual soil response under dynamic (earthquake) loads. N-values from SPT blow counts are a useful index of soil strength, but are less directly correlated to shear modulus than shear wave velocities. Likewise, shear strength tests are typically evaluated on widely spaced samples, and may not accurately represent the variability of the in situ conditions.

©2014 All Rights Reserved

LIMITATIONS

While we were able to identify and verify many anomalies typical of subsurface utilities, the geophysical method used here is not able to detect every possible subsurface utility. We recommend that all available location and depth information regarding utilities (including geophysical, topographic surveying, historic plans, direct connection underground utility locators, etc.) be combined and cross-verified to provide an overall site utility plan.

The effectiveness of geophysical methods in subsurface investigations is dependent on many environmental and site factors including conductivity of the soil, cultural features, groundwater, and soil saturation conditions. The effect of these factors on the geophysical results varies depending on actual localized site conditions. Also, with most geophysical methods, resolution decreases with depth; therefore, potentially significant features, especially small or deep utilities, may not be observed in the data.

We based the interpretations submitted in this report on the information revealed by our exploration. We attempted to provide for normal contingencies, but the possibility remains that unexpected conditions may be encountered during construction.

This report has been prepared to aid in the evaluation of this site and to assist in the design of the project. It is intended for use concerning this specific project. We based our recommendations on information on the site and proposed construction as described in this report. Substantial changes should be brought to our attention so we can make modifications to this report as needed.

We have endeavored to complete the services identified herein in a manner consistent with that level of care and skill ordinarily exercised by members of the profession currently practicing in the same locality and under similar conditions as this project. No other representation, express or implied, is included or intended, and no warranty or guarantee is included or intended in this report, or other instrument of service.

We appreciate the opportunity to be of service for this project. Please call us if you have any questions regarding this report.

Sincerely,

SCHNABEL ENGINEERING CONSULTANTS, INC.

Mia A. Painter, PG
Senior Geologist

Mark H. Dunscomb, PG
Senior Associate

©2014 All Rights Reserved

MAP:MHD:jlc

Figures
Appendix A: EM Anomalies

Distribution:

STV Incorporated (1 and 1 CD)
Attn: Mr. Richard W. Flickinger

NAVFAC (3 and 1 CD)
Attn: Mr. Ben Danzing, PE

©2014 All Rights Reserved

FIGURES

Figure 1: Site Vicinity Map
Figure 2: Boring & Test Pit Location Plan
Figure 3: Geophysical Investigation Location Plan
Figure 4: EM31 In-Phase Results
Figure 5: EM31 Terrain Conductivity Results
Figure 6: EM61 Channel 1 Results
Figure 7: EM61 Differential Results
Figure 8: EM Summary Results
Figure 9: GPR Results
Figure 10: GPR Results Example Profiles
Figure 11: MASW Profiling Results
Figure 12: MASW for IBC – Shear Wave Velocity Model

©2014 All Rights Reserved

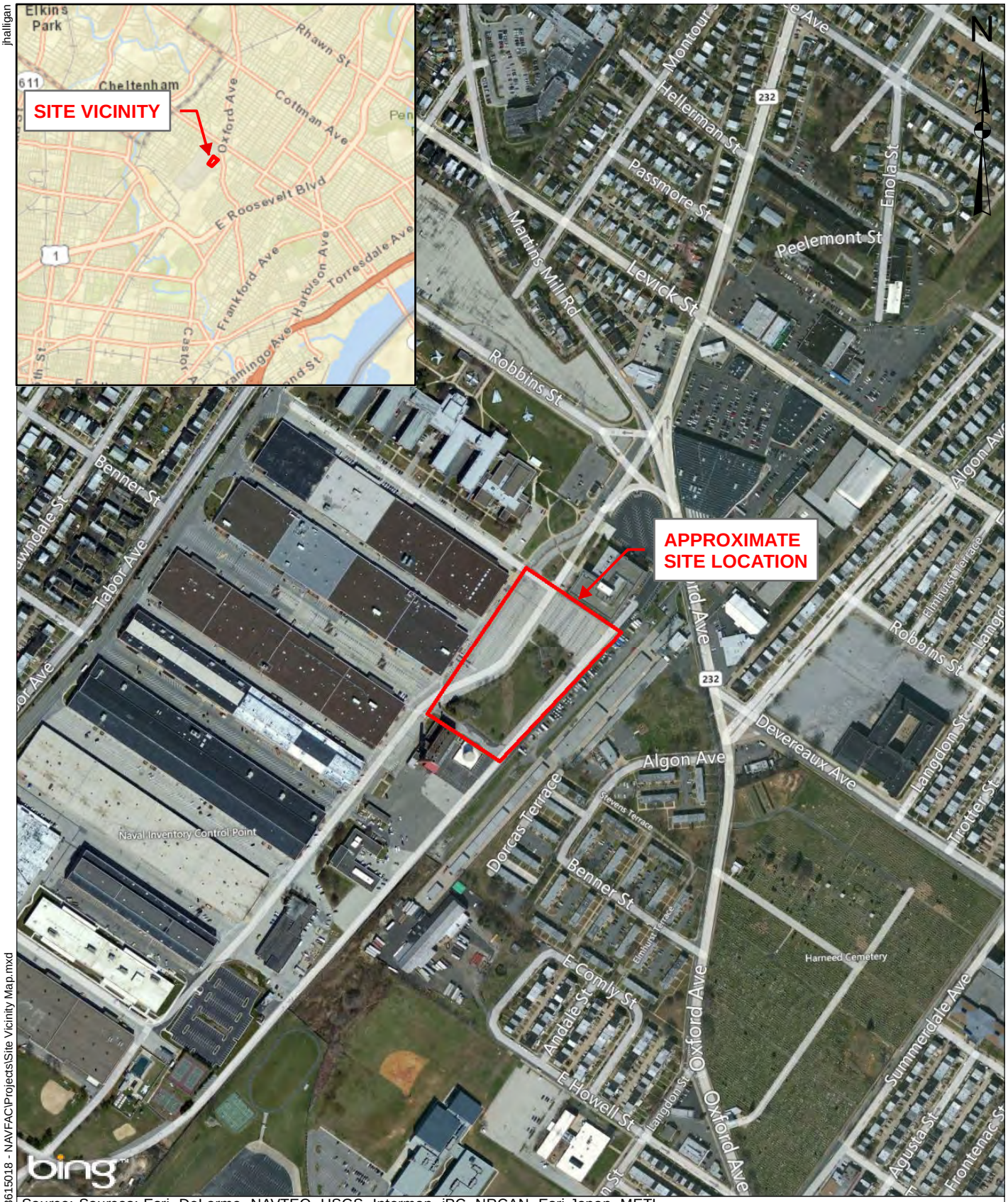

Source: Sources: Esri, DeLorme, NAVTEQ, USGS, Intermap, iPC, NRCAN, Esri Japan, METI, Esri China (Hong Kong), Esri (Thailand), TomTom, 2012
Image courtesy of USGS State of Michigan © 2013 Nokia © AND
Projection: NAD 1983 StatePlane Pennsylvania South FIPS 3702 Feet

500 250 0 500 Feet

Scale: 1 in = 500 ft

Schnabel ENGINEERING

NAVFAC
DLA TROOP SUPPORT HQ FACILITY
PHILADELPHIA, PENNSYLVANIA
PROJECT NO. 13615018.00

SITE VICINITY MAP

FIGURE 1

jhalligan

10/9/2013 B:\GIS_Data\2013\13615018 - NAVFAC\Projects\Site Vicinity Map.mxd

© Schnabel Engineering, 2013 All Rights Reserved

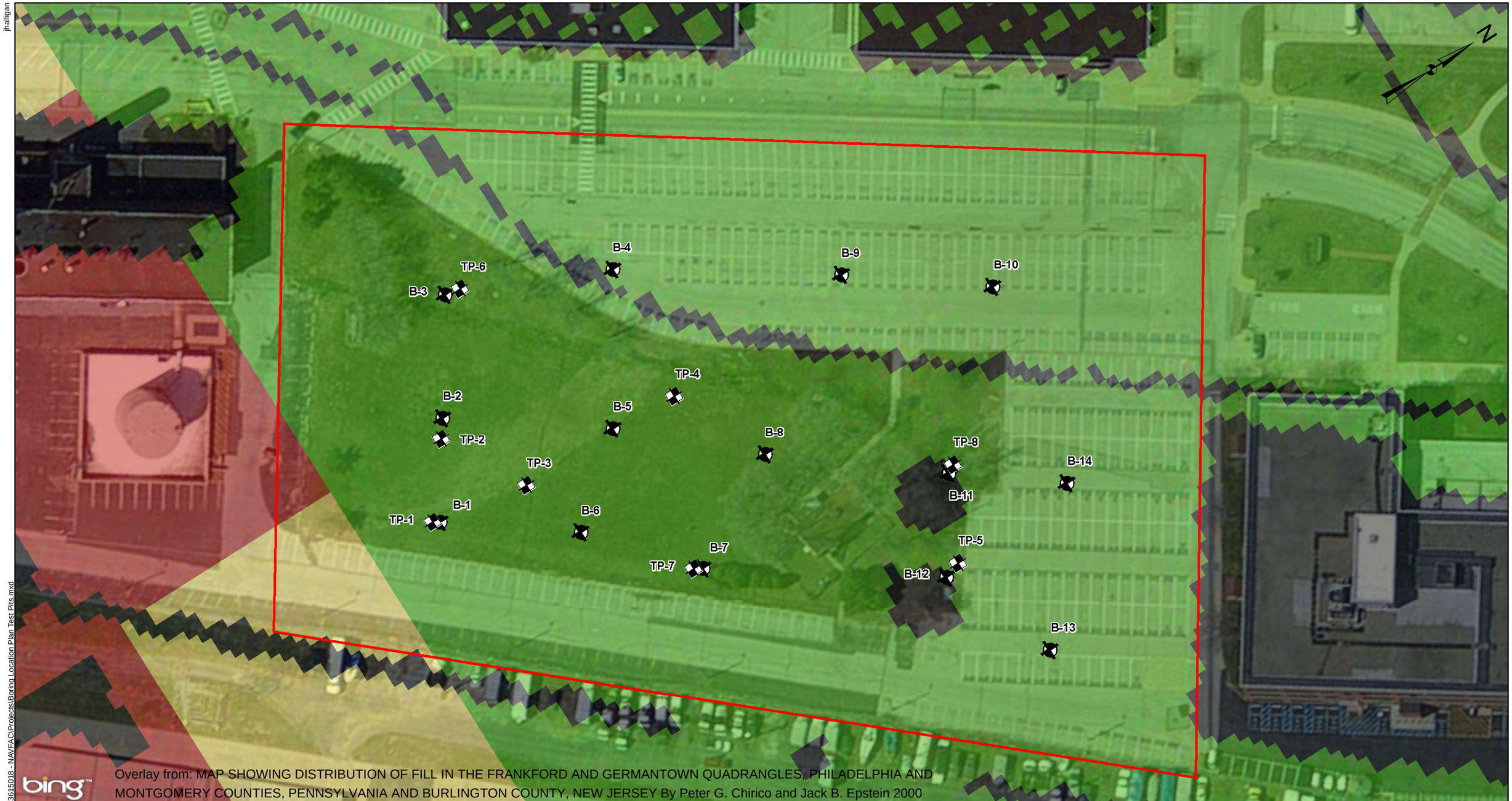

Overlay from: MAP SHOWING DISTRIBUTION OF FILL IN THE FRANKFORD AND GERMANTOWN QUADRANGLES, PHILADELPHIA AND MONTGOMERY COUNTIES, PENNSYLVANIA AND BURLINGTON COUNTY, NEW JERSEY By Peter G. Chirico and Jack B. Epstein 2000

Legend

- APPROXIMATE TEST PIT LOCATION
- APPROXIMATE BORING LOCATION

DESCRIPTION OF MAP UNITS

po — **Possible Fill** - GIS grid analysis results showing positive topographic change (5 or more feet of fill from between 1899 and 1997) *or* evidence of a buried stream channel.

pr — **Probable Fill** - GIS grid analysis results showing positive topographic change (5 or more feet of fill from between 1899 and 1997) *and* evidence of a buried stream channel.

Source: State of Michigan
Projection: NAD 1983 StatePlane Pennsylvania South FIPS 3702 Feet

0 30 60 120 Feet
Scale: 1 in = 60 ft

Schnabel ENGINEERING

NAVFAC
DLA TROOP SUPPORT HQ FACILITY
PHILADELPHIA, PENNSYLVANIA

PROJECT NO. 13615018.00

BORING & TEST PIT LOCATION PLAN

FIGURE 2

© Schnabel Engineering, 2013 All Rights Reserved

jhalligan

10/25/2013 8:42:22 AM B:\GIS_Data\2013\13615018 - NAVFAC\Projects\Boring Location Plan Test Pits.mxd

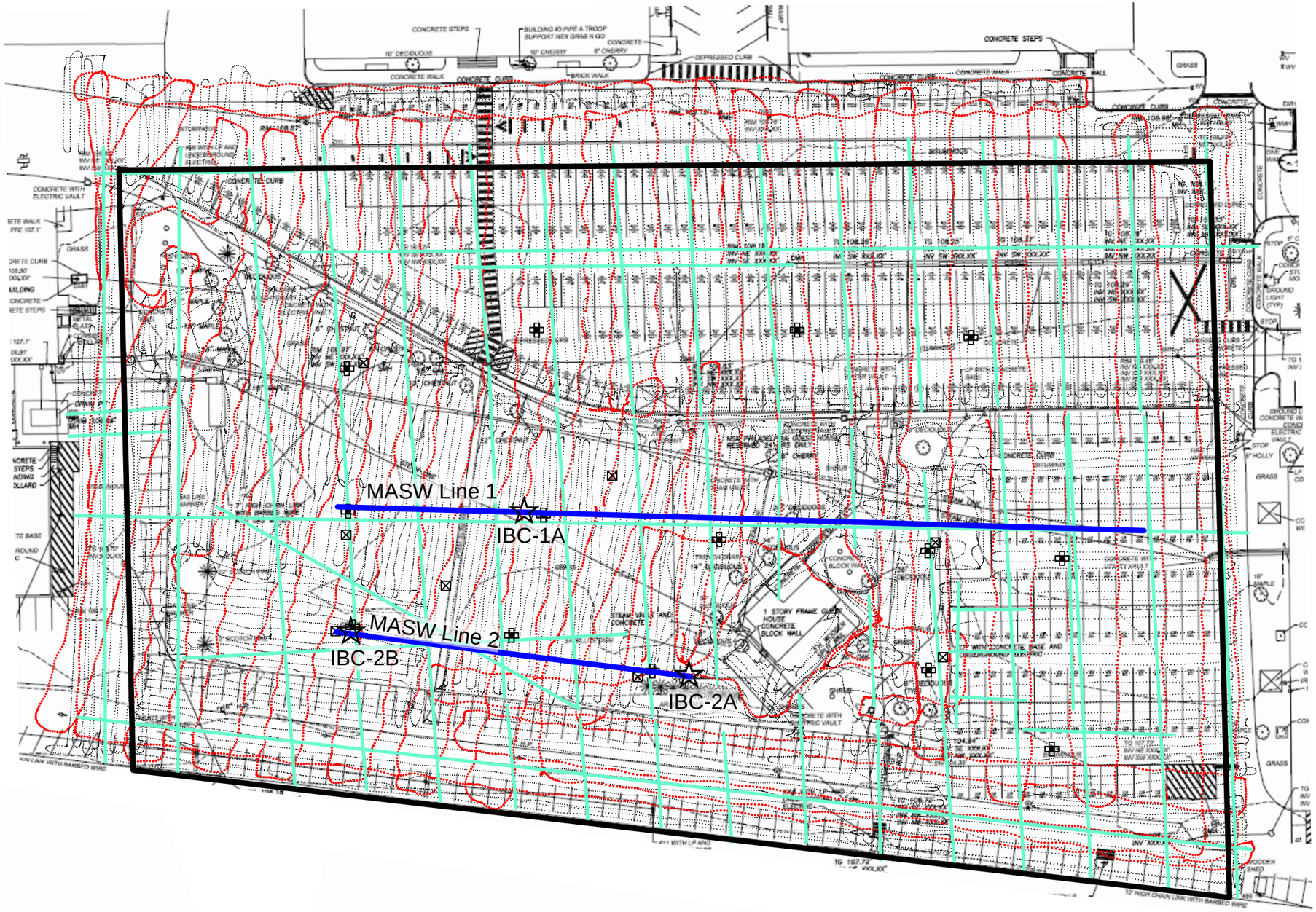

LEGEND

- Geophysical Work Area
- EM31 Data Points
- EM61 Data Points
- GPR Traverse
- MASW Profile Traverse
- MASW IBC Location
- Test Boring
- Test Pit

1 inch = 60 feet

0 30 60 90 120

Base plan provided by STV (draft).

Schnabel ENGINEERING

NAVFAC
DLA TROOP SUPPORT HQ FACILITY
PHILADELPHIA, PA
PROJECT NO. 13615018

GEOPHYSICAL INVESTIGATION LOCATION PLAN

FIGURE 3

© Schnabel Engineering 2013 All Rights Reserved

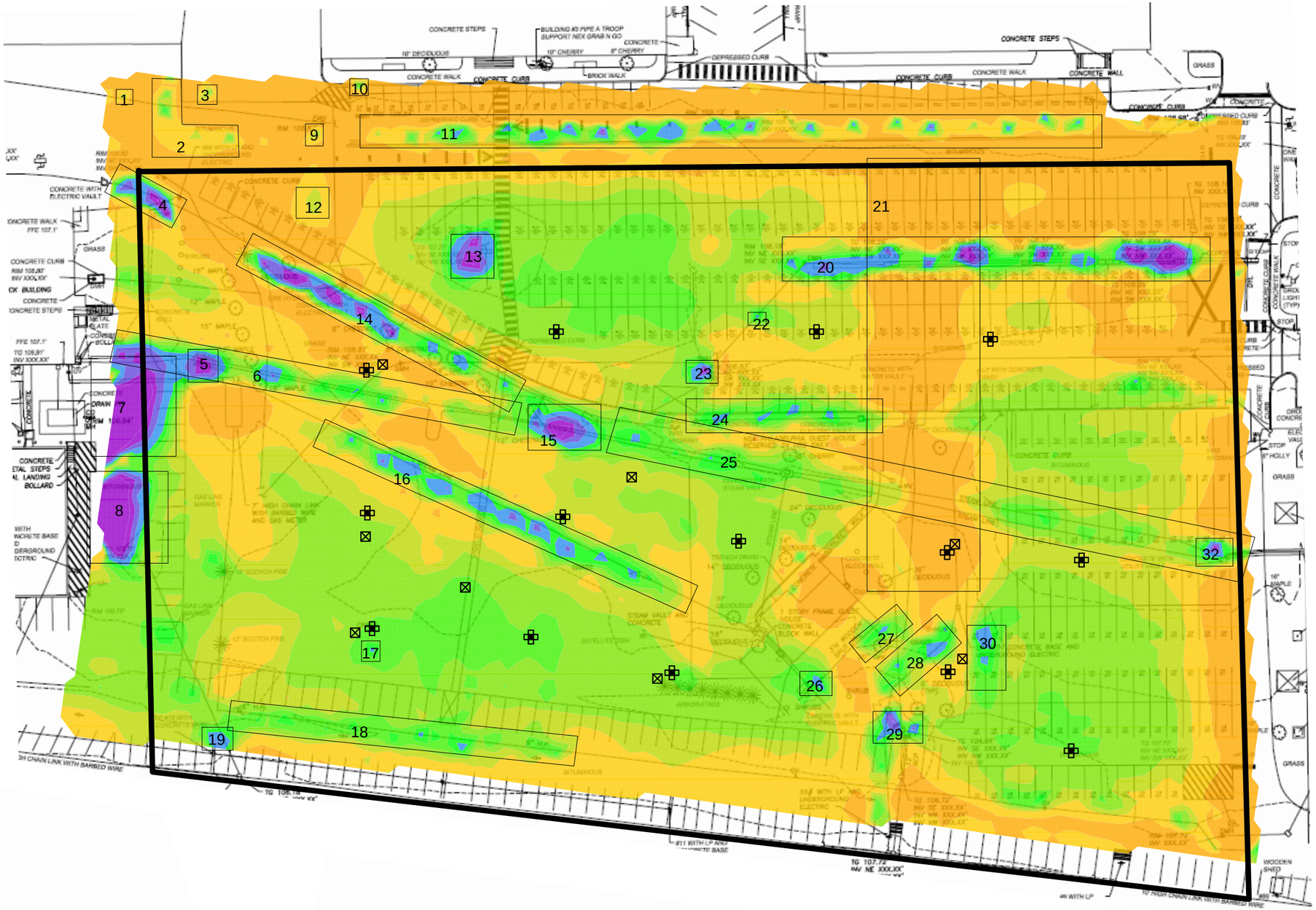

SCALE
EM31 In Phase Ratio (ppt)

30
12
8
6
4
2
0
-4
-8
-12
-30

LEGEND

Geophysical Work Area

Test Boring

Test Pit

1 Anomaly

1 inch = 60 feet

0 30 60 90 120

Base plan provided by STV (draft, 9/30/13).

Schnabel ENGINEERING

NAVFAC
DLA TROOP SUPPORT HQ FACILITY
PHILADELPHIA, PA
PROJECT NO. 13615018

EM31 IN-PHASE RESULTS

FIGURE 4

© Schnabel Engineering 2013 All Rights Reserved

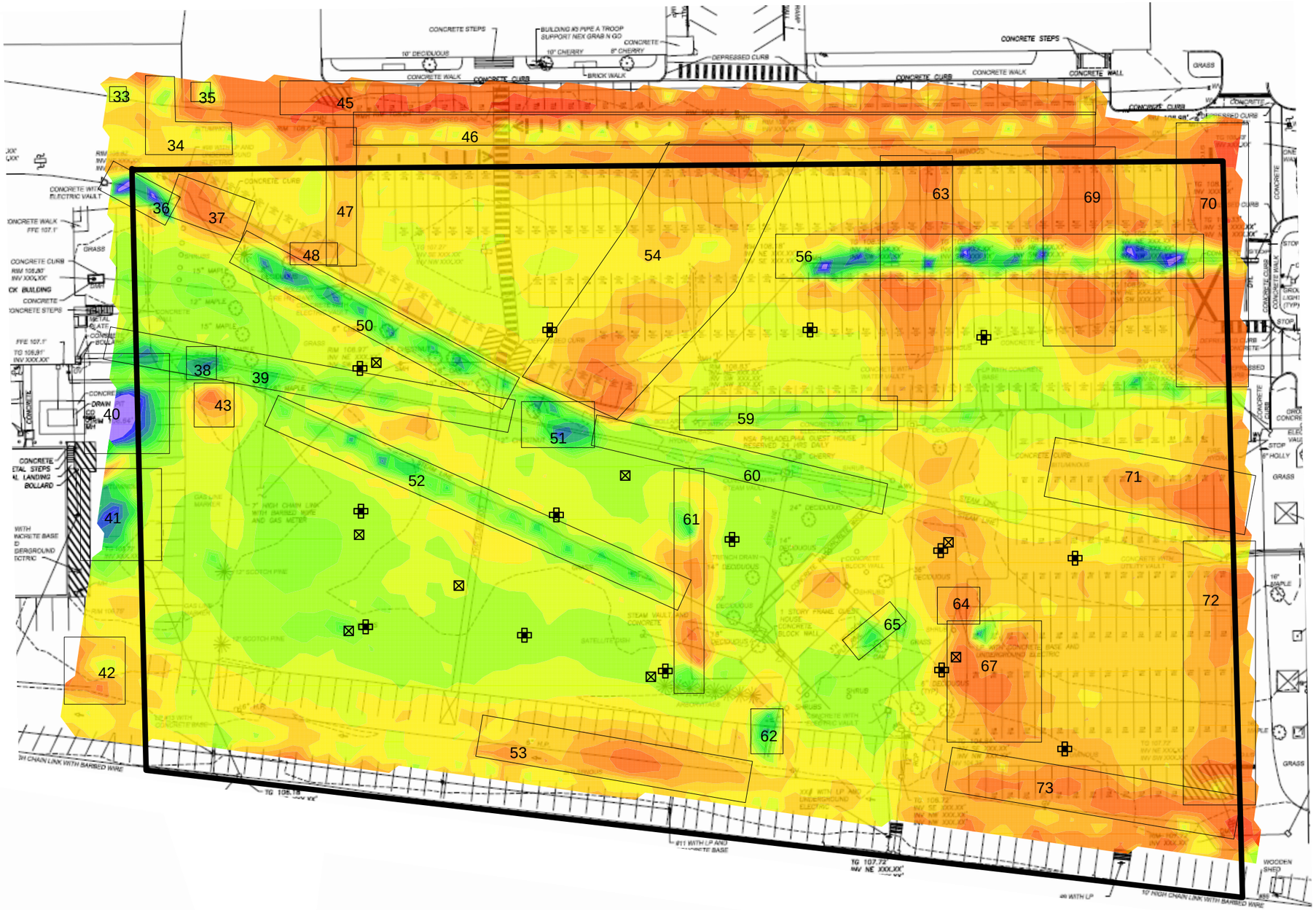

SCALE
EM31 Quad Response
Apparent Conductivity (mmhos/m)

240
200
160
140
120
100
80
60
40
30
20
10
0
-20
-40
-60
-80
-100
-180

LEGEND

Geophysical Work Area

Test Boring

Test Pit

1 Anomaly

1 inch = 60 feet

0 30 60 90 120

Base plan provided by STV (draft, 9/30/13).

Schnabel ENGINEERING

NAVFAC
DLA TROOP SUPPORT HQ FACILITY
PHILADELPHIA, PA
PROJECT NO. 13615018

EM31
TERRAIN CONDUCTIVITY
RESULTS
FIGURE 5

© Schnabel Engineering 2013 All Rights Reserved

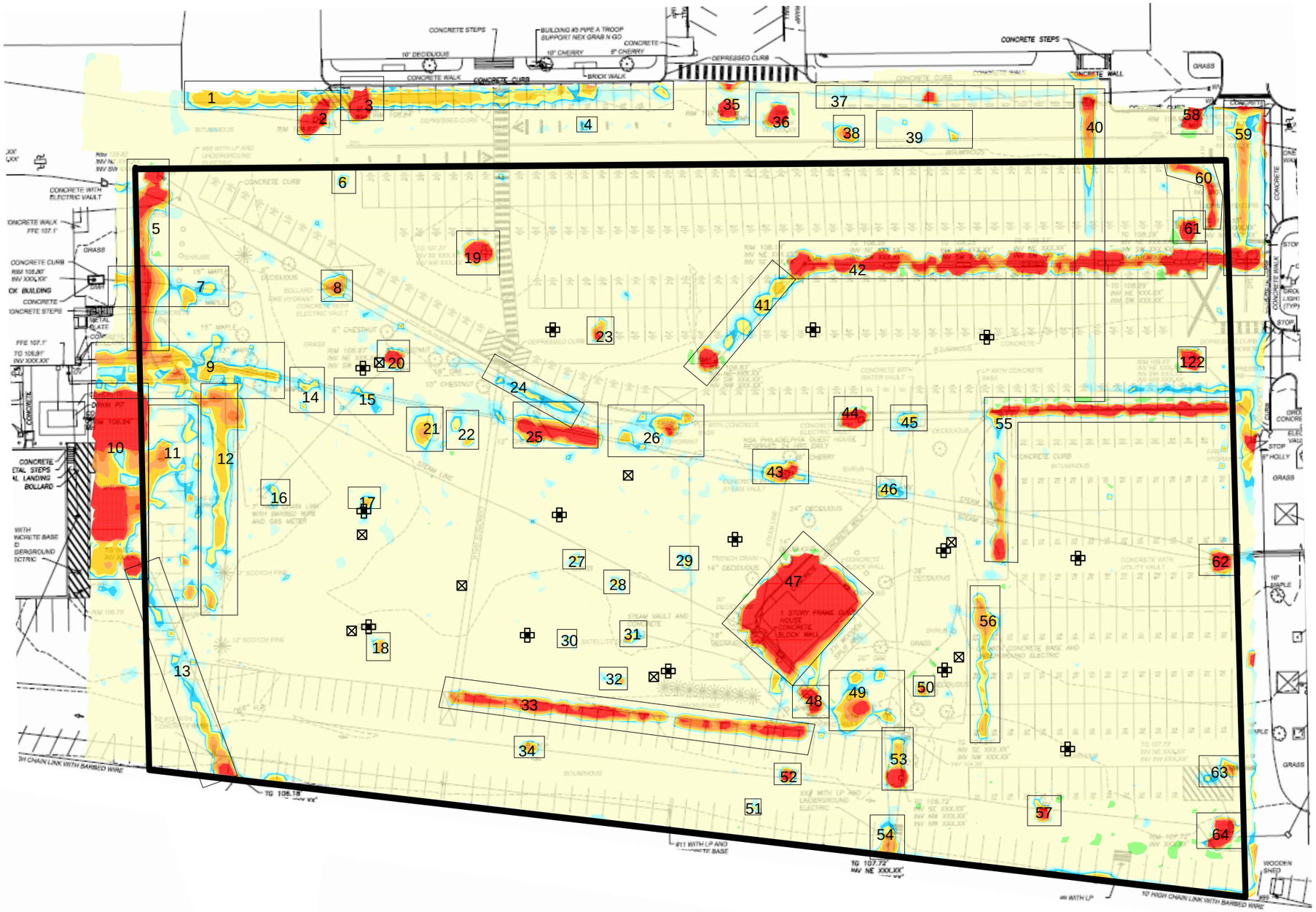

SCALE
EM61 Channel 1
Response (mV)

2000
1000
750
500
300
200
150
100
50
0
-100
-200
-1000
-1200

LEGEND

Geophysical Work Area

Test Boring

Test Pit

1 Anomaly

1 inch = 60 feet

0 30 60 90 120

Base plan provided by STV (draft, 9/30/13).

Schnabel ENGINEERING

NAVFAC
DLA TROOP SUPPORT HQ FACILITY
PHILADELPHIA, PA
PROJECT NO. 13615018

EM61
CHANNEL 1
RESULTS

FIGURE 6

© Schnabel Engineering 2013 All Rights Reserved

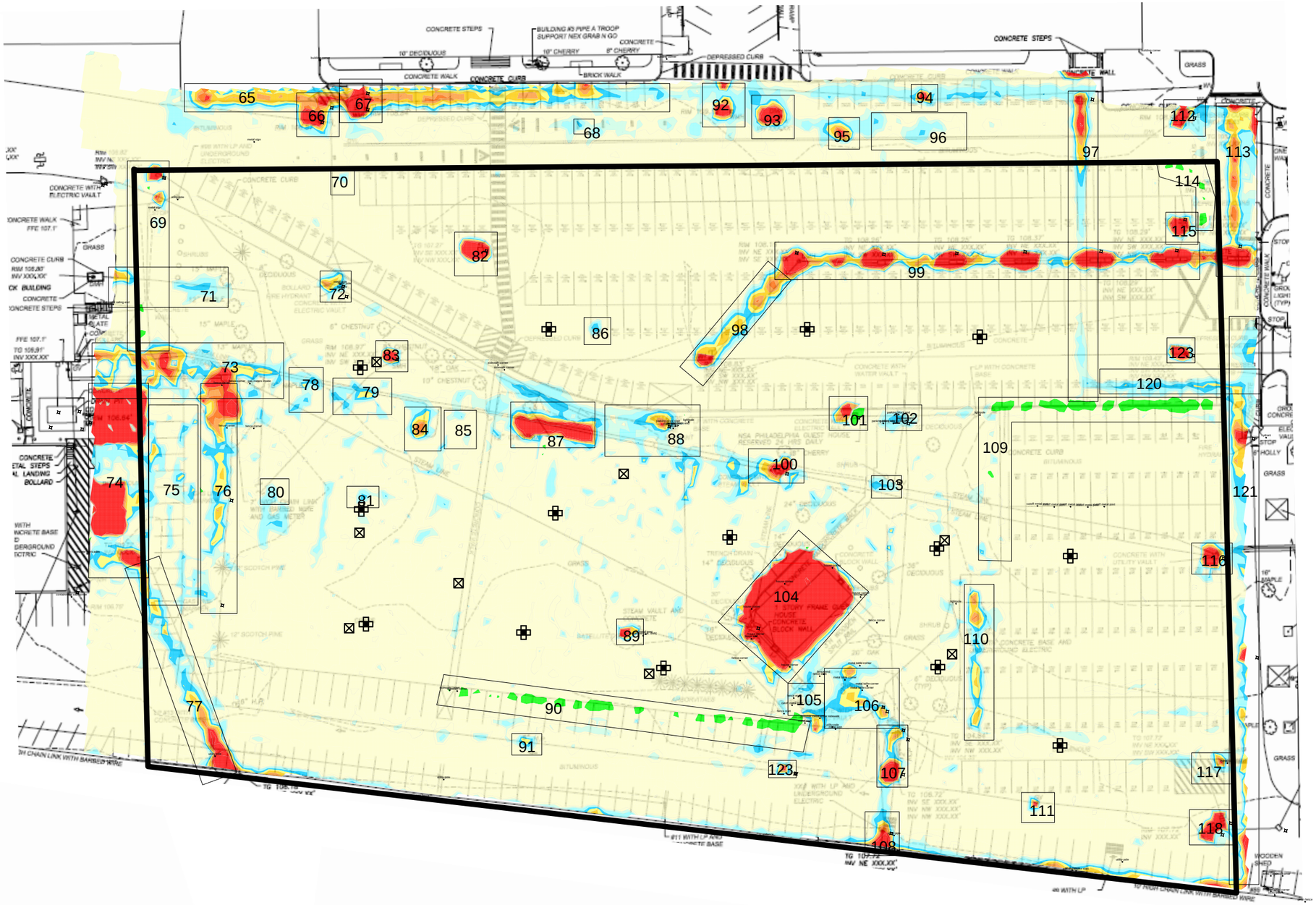

SCALE
EM61 Differential
Response (mV)

200
160
140
120
100
80
60
40
30
20
0
-100
-1200

LEGEND

Geophysical Work Area

Test Boring

Test Pit

1 Anomaly

1 inch = 60 feet

0 30 60 90 120

Base plan provided by STV (draft, 9/30/13).

Schnabel ENGINEERING

NAVFAC
DLA TROOP SUPPORT HQ FACILITY
PHILADELPHIA, PA
PROJECT NO. 13615018

EM61
DIFFERENTIAL
RESULTS

FIGURE 7

© Schnabel Engineering 2013 All Rights Reserved

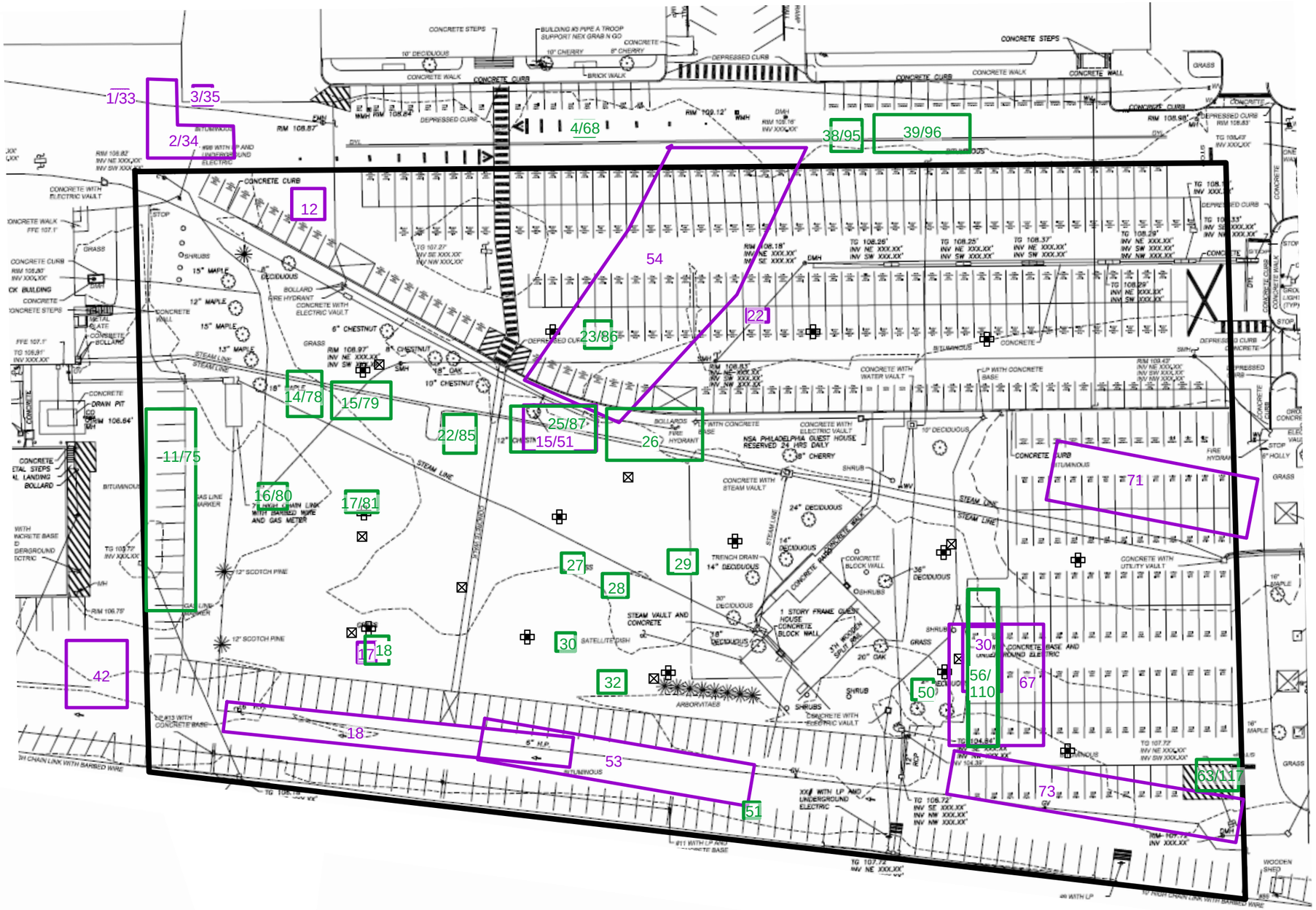

LEGEND

- Geophysical Work Area
- Test Boring
- Test Pit
- 1 — EM31 Anomaly of Unknown Cause
- 1 — EM61 Anomaly of Unknown Cause

1 inch = 60 feet

0 30 60 90 120

Base plan provided by STV (draft, 9/30/13).

Schnabel ENGINEERING

NAVFAC
DLA TROOP SUPPORT HQ FACILITY
PHILADELPHIA, PA
PROJECT NO. 13615018

EM SUMMARY RESULTS

FIGURE 8

© Schnabel Engineering 2013 All Rights Reserved

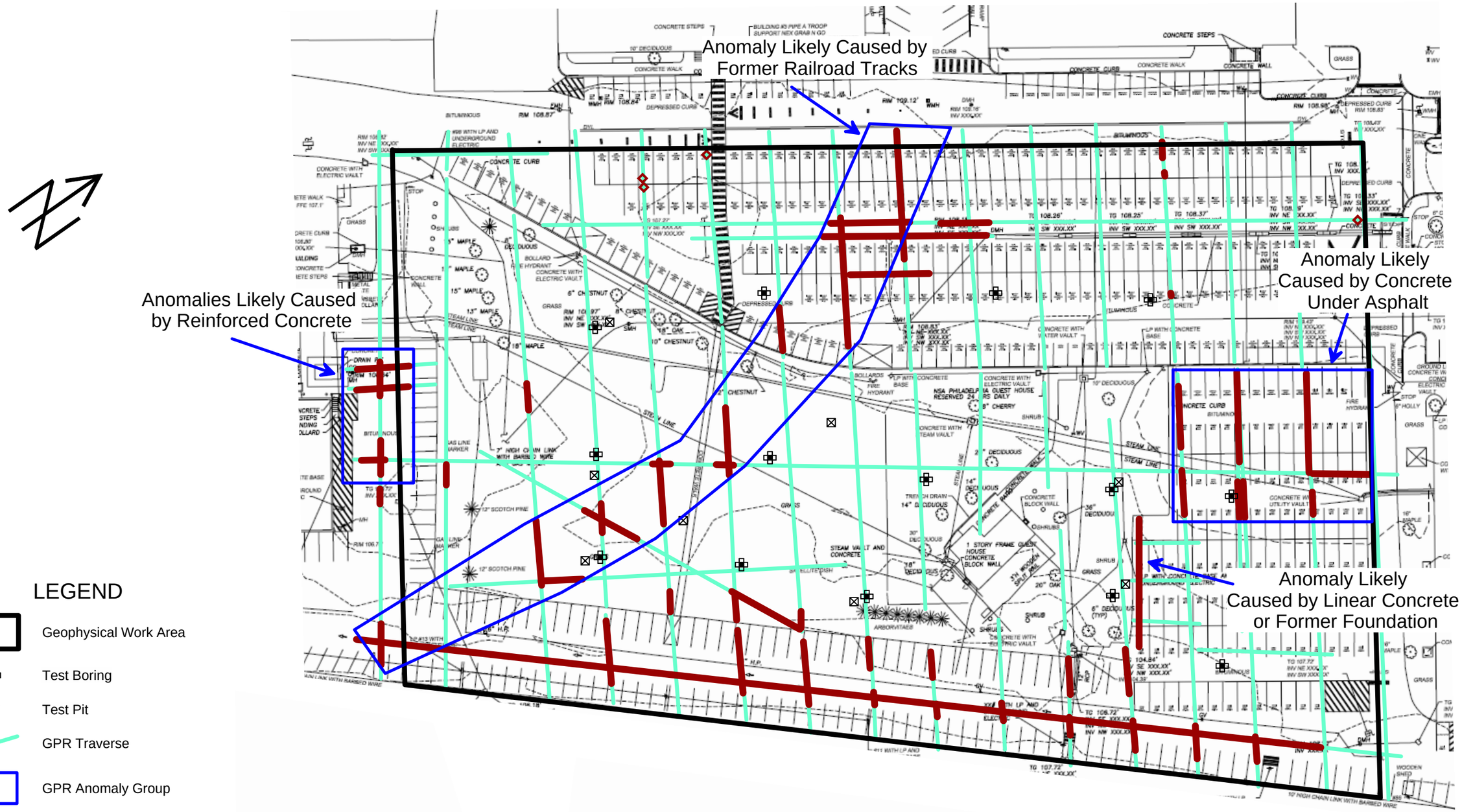

Base plan provided by STV (draft, 9/30/13).

Schnabel ENGINEERING

NAVFAC
DLA TROOP SUPPORT HQ FACILITY
PHILADELPHIA, PA
PROJECT NO. 13615018

GPR RESULTS

FIGURE 9

© Schnabel Engineering 2013 All Rights Reserved

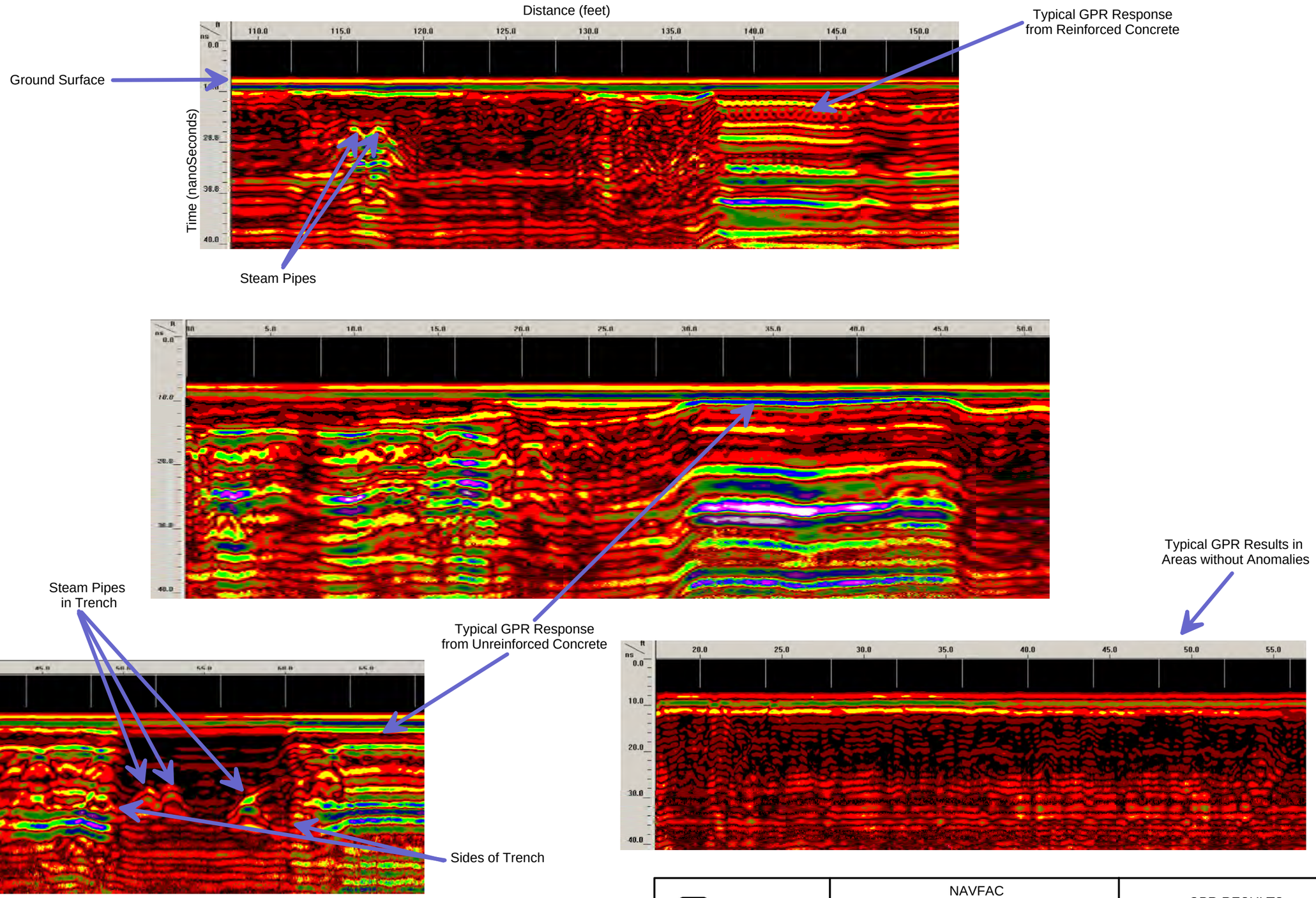

Schnabel ENGINEERING

NAVFAC
DLA TROOP SUPPORT HQ FACILITY
PHILADELPHIA, PA
PROJECT NO. 13615018

GPR RESULTS
EXAMPLE PROFILES

FIGURE 10

© Schnabel Engineering 2013 All Rights Reserved

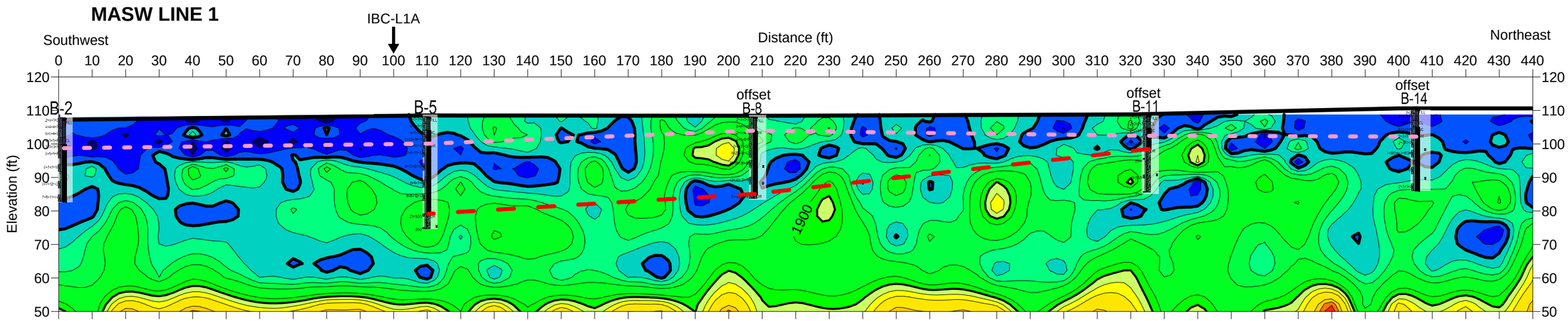

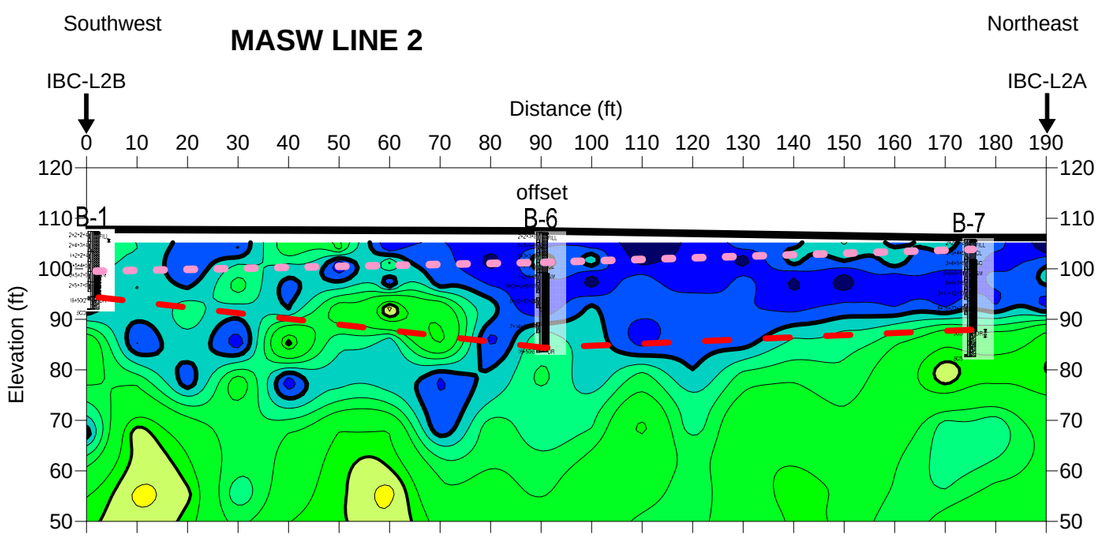

GENERALIZED INTERPRETATION

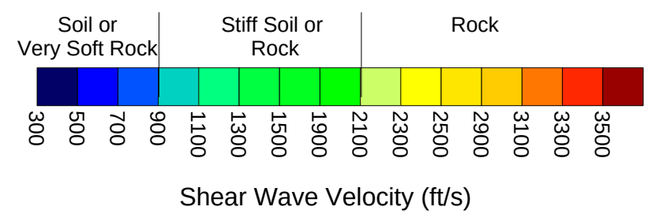

LEGEND

Bottom of Fill
(Based on Test Borings)

Top of Disintegrated Rock
(Based on Test Borings)

Schnabel ENGINEERING

NAVFAC
DLA TROOP SUPPORT HQ FACILITY
PHILADELPHIA, PA
PROJECT NO. 13615018

MASW PROFILING RESULTS

FIGURE 11

© Schnabel Engineering 2013 All Rights Reserved

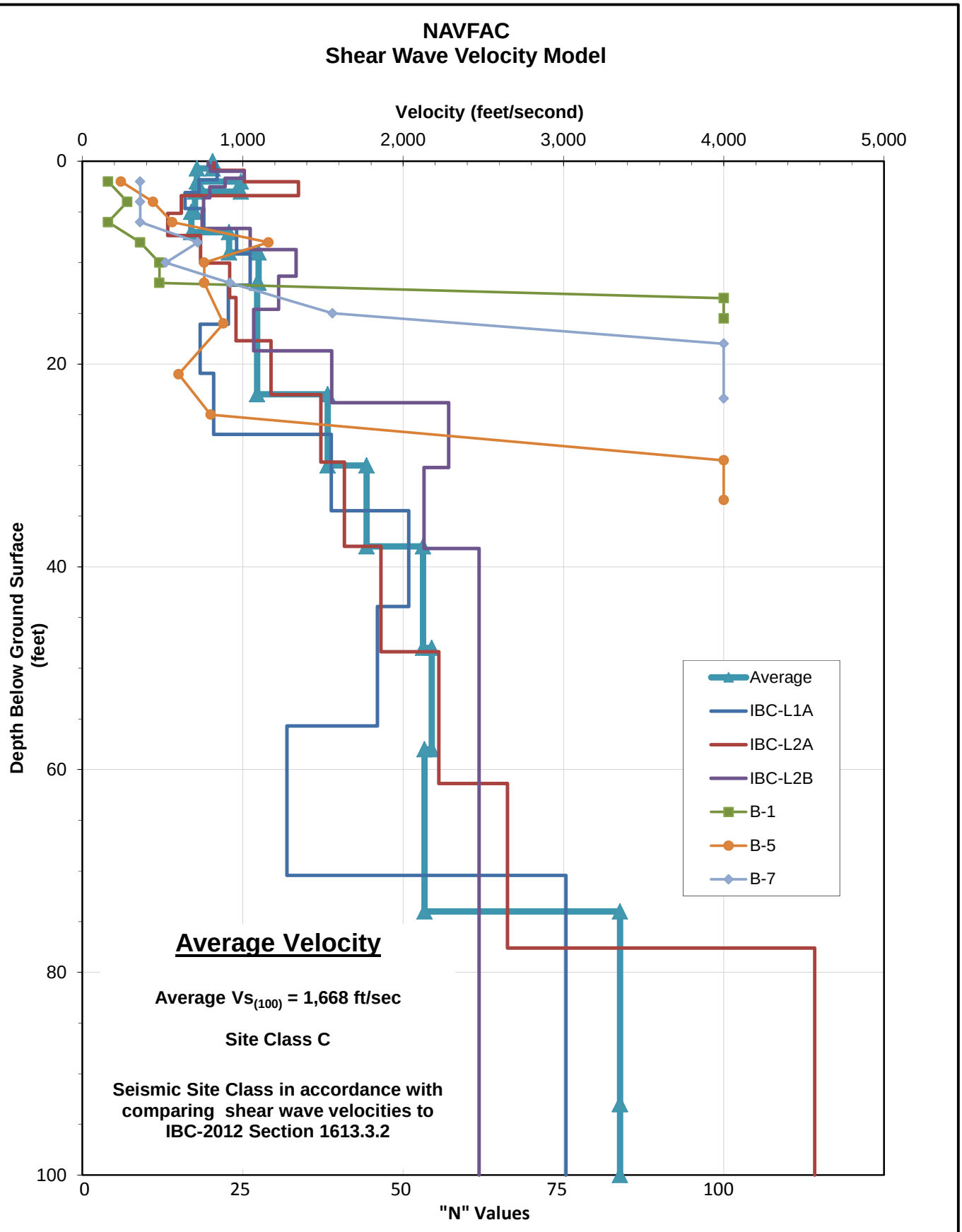

Schnabel ENGINEERING

NAVFAC
DLA TROOP SUPPORT HQ FACILITY
PHILADELPHIA, PA
PROJECT NO. 13615018.00

MASW for IBC
SHEAR WAVE
VELOCITY MODEL
FIGURE 12

© Schnabel Engineering 2013 All Rights Reserved

APPENDIX A

EM ANOMALIES

Table A: EM31 Anomalies
Table B: EM61 Anomalies

©2014 All Rights Reserved

13615018
NAVFAC DLA

Table A
EM31 Anomalies

EM31 In-Phase Anomaly As Shown on Fig. 4	EM31 Quadrature Anomaly As Shown on Fig. 5	Probable Cause Visible at Ground Surface	Subsurface Utility Related	Investigated with GPR	Unknown As Shown on Fig. 8	Notes, Probable Cause of Anomaly (Utility type is based on surveyor's site plan and paint markings we observed while on site.)
1	33				x	possible pedestrian crossing sign, along water line, but no other cause observed
2	34				x	possible pedestrian crossing sign, along water line, but no other cause observed
3	35				x	possible pedestrian crossing sign, along water line, but no other cause observed
4	36	x	x			underground electric, storm manhole (SMH), stop sign
5	38		x			steam line and gas line
6	39		x			steam line
7	40			x		reinforced concrete beneath asphalt
8	41			x		reinforced concrete beneath asphalt
9			x			electric manhole
10	45					reinforced concrete curb/sidewalk and/or water line
11	46		x			water line or electric line
12					x	adjacent to water line, but no other cause observed
13		x	x			inlet
14	50	x	x			electric line, concrete with electric vault
15	51		x		x	large anomaly along steam line, and at electric line junction, possibly vault
16	52		x			steam line
17					x	surface or very shallow subsurface metallic feature or debris
18	53		x			gas line or water line
19		x	x			inlet
20	56	x	x			2' wide concrete culvert
21	63		x			water line
22			x			along 24" reinforced concrete pipe (RCP)
23		x	x			SMH
24	59	x	x			electric line, concrete with electric vault, pole
25	60		x			steam line
26		x				reinforced concrete near residence
27	65		x			electric line
28		x	x			electric line and near metal picnic table
29		x	x			concrete with electric vault, residence sign
30	67	x		x	x	possible buried foundation wall, slag debris at surface
32		x	x			concrete at surface, steam line
	37	x	x			light post and sewer line
	42		x		x	near unknown (UNK) utility
	43	x	x			gas line and chain link fence
	47		x			water line
	48	x	x			bollards, fire hydrant
	54			x	x	possible debris along former railroad bed
	61		x			along UNK utility
	62		x			along UNK utility
	64	x	x			electric pole with concrete base
	69		x			water line
	70		x			water line
	71				x	broad high anomaly, may be soil changes or unknown utility
	72		x			water line
	73				x	possible gas line, or unknown utility

Table B
EM61 Anomalies

EM1 Channel 1 Anomaly As Shown on Fig. 6	EM61 Differential Anomaly As Shown on Fig. 7	Probable Cause Visible at Ground Surface	Subsurface Utility Related	Investigated with GPR	Unknown As Shown on Fig. 8	Notes, Probable Cause of Anomaly (Utility type is based on surveyor's site plan and paint markings we observed while on site.)
1	65	x				reinforced concrete curb/sidewalk and/or water line
2	66		x			electric manhole (EMH) and/or water valve
3	67		x			water manhole (WMH)
4	68				x	along water line or electric line
5	69	x	x			underground electric, sanitary manhole (SMH), concrete curbs
6	70	x				pedestrian crossing sign
7	71		x			unknown (UNK) utility
8	72	x	x			bollard, fire hydrant, and concrete
9	73		x			steam line and gas line
10	74			x		reinforced concrete beneath asphalt
11	75	x			x	several small anomalies, possibly due to concrete wheel stops, metallic debris/slag in gravel, possible linear subsurface anomaly
12	76		x			gas line
13	77		x			15" corrugated metal pipe (CMP)
14	78		x		x	along steam line
15	79		x		x	along steam line
16	80		x		x	shallow feature, along 60" reinforced concrete pipe (RCP), possibly due to buried manhole at RCP junction, or buried metal debris
17	81				x	shallow feature, possibly due to metal debris
18					x	possibly due to surface or very shallow subsurface metallic feature or debris
19	82	x	x			inlet
20	83	x	x			SMH
21	84		x			along steam line, at loop
22	85				x	along steam line
23	86			x	x	shallow feature, possibly due to metal debris, or paved-over manhole or valve cover, but no known utilities at this location
24		x	x			along curb line, along electric line
25	87		x		x	large anomaly along steam line, and at electric line junction, possibly vault
26	88	x	x			lamppost, bollards, fire hydrant
27					x	shallow feature, possible metallic debris
28					x	shallow feature, possible metallic debris
29					x	shallow feature, possible metallic debris
30					x	shallow feature, possible metallic debris
31	89	x	x			satellite dish
32					x	shallow feature, possible metallic debris
33	90	x				concrete wheel stops
34	91		x			along gas and water line, possible paved-over valve cover
35	92	x				WMH
36	93	x	x			EMH
37	94	x				reinforced concrete curb/sidewalk
38	95		x		x	along electric line, possible paved-over valve cover
39	96				x	shallow feature, possible metallic debris
40	97		x			water line
41	98		x			48" RCP
42	99	x	x			2' wide concrete culvert
43	100	x	x			concrete with steam vault
44	101	x	x			concrete with electric vault
45	102	x	x			concrete with water vault
46	103	x	x			water valve
47	104	x				residence structure and concrete
48	105	x				concrete
49	106	x	x			concrete with electric vault and metal picnic table
50				x	x	shallow feature, possible metallic debris
51					x	shallow feature, possible metallic debris
52	123	x	x			gas valve
53	107	x	x			inlet
54	108	x	x			inlet, pole, electric
55	109	x				concrete wheel stops
56	110			x	x	possible buried foundation wall, slag debris at surface
57	111	x	x			gas valve
58	112	x	x			WMH
59	113		x			UNK
60	114	x				wheel stop/planters
61	115	x	x			inlet
62	116	x	x			steam line, concrete
63	117				x	appears similar in response to a valve cover, but no known utilities at this location
64	118	x	x			inlet
122	123	x	x			inlet
	120		x			water line
	121		x			water line

TestAmerica

THE LEADER IN ENVIRONMENTAL TESTING

ANALYTICAL REPORT

TestAmerica Laboratories, Inc.
TestAmerica Edison
777 New Durham Road
Edison, NJ 08817
Tel: (732)549-3900

TestAmerica Job ID: 460-62522-1
Client Project/Site: NAVFAC DLA
Revision: 1

For:
Schnabel Engineering
1380 Wilmington Pike
Suite 100
West Chester, Pennsylvania 19382

Attn: Bill Bradfield

Authorized for release by:
9/20/2013 11:25:47 AM

Jill Miller, Senior Project Manager
jill.miller@testamericainc.com

LINKS

Review your project results through TotalAccess

Have a Question? Ask The Expert

Visit us at: www.testamericainc.com

The test results in this report meet all 2003 NELAC and 2009 TNI requirements for accredited parameters, exceptions are noted in this report. This report may not be reproduced except in full, and with written approval from the laboratory. For questions please contact the Project Manager at the e-mail address or telephone number listed on this page.

This report has been electronically signed and authorized by the signatory. Electronic signature is intended to be the legally binding equivalent of a traditionally handwritten signature.

Results relate only to the items tested and the sample(s) as received by the laboratory.

Table of Contents

Cover Page 1
Table of Contents 2
Definitions/Glossary 3
Case Narrative 4
Client Sample Results 6
Lab Chronicle 25
Certification Summary 31
Method Summary 32
Sample Summary 33
Chain of Custody 34
Receipt Checklists 36

Qualifiers

GC/MS VOA

Qualifier	Qualifier Description
J	Result is less than the RL but greater than or equal to the MDL and the concentration is an approximate value.

GC/MS Semi VOA

Qualifier	Qualifier Description
X	Surrogate is outside control limits

GC VOA

Qualifier	Qualifier Description
X	Surrogate is outside control limits

GC Semi VOA

Qualifier	Qualifier Description
X	Surrogate is outside control limits

Glossary

Abbreviation	These commonly used abbreviations may or may not be present in this report.
¤	Listed under the "D" column to designate that the result is reported on a dry weight basis
%R	Percent Recovery
CNF	Contains no Free Liquid
DER	Duplicate error ratio (normalized absolute difference)
Dil Fac	Dilution Factor
DL, RA, RE, IN	Indicates a Dilution, Re-analysis, Re-extraction, or additional Initial metals/anion analysis of the sample
DLC	Decision level concentration
MDA	Minimum detectable activity
EDL	Estimated Detection Limit
MDC	Minimum detectable concentration
MDL	Method Detection Limit
ML	Minimum Level (Dioxin)
NC	Not Calculated
ND	Not detected at the reporting limit (or MDL or EDL if shown)
PQL	Practical Quantitation Limit
QC	Quality Control
RER	Relative error ratio
RL	Reporting Limit or Requested Limit (Radiochemistry)
RPD	Relative Percent Difference, a measure of the relative difference between two points
TEF	Toxicity Equivalent Factor (Dioxin)
TEQ	Toxicity Equivalent Quotient (Dioxin)

Job ID: 460-62522-1

Laboratory: TestAmerica Edison

Narrative

Job Narrative
460-62522-1

Revision(1)
Sample ID for sample 01 corrected.

Receipt
The samples were received on 9/6/2013 3:21 PM; the samples arrived in good condition, properly preserved and, where required, on ice. The temperature of the cooler at receipt was 5.5º C.

Except:
The following job was received at the laboratory without a sample collection dates and times documented on the chain of custody for each sample: . As a result, sample times and dates were taken from the bottleware.

GC/MS VOA
Method(s) 8260B: The matrix spike duplicate (MSD) recoveries for batch 1801649 were outside control limits for several analytes. The associated laboratory control sample (LCS) recovery met acceptance criteria.

No other analytical or quality issues were noted.

GC/MS Semi VOA
Method(s) 8270C: The following sample(s) contained one acid and/or one base surrogate outside acceptance limits: B-8 3-6'. The laboratory's SOP allows one acid surrogate and/or one base surrogate to be outside acceptance limits; therefore, re-extraction/re-analysis was not performed. These results have been reported and qualified.

No other analytical or quality issues were noted.

GC VOA
Method(s) 8015B: Surrogate recovery for the following sample(s) was outside the upper control limit: B-6 5.5-3'. This sample did not contain any target analytes; therefore, re-extraction and/or re-analysis was not performed.

No other analytical or quality issues were noted.

GC Semi VOA
Method(s) 8015B, 8015C: The matrix spike / matrix spike duplicate (MS/MSD) recoveries for batch 180456 were outside control limits. The associated laboratory control sample (LCS) recovery met acceptance criteria.

Method(s) 8081A: DCB Surrogate recovery for this sample was outside the upper control limit, on the primary column. This sample did not contain any target analytes; therefore, re-extraction and/or re-analysis was not performed.B-2 0.5-3', B-6 3-6', B-6 5.5-3'

Method(s) 8081A: TCMX Surrogate recovery for the matrix spike (MS) associated with batch 180476 was outside the upper control limit on the secondary column. TCMX Surrogate recovery is within limits on the primary column. TCMX and DCB surrogate recoveries for LCS and MSD are within limits on both columns, therefore, re-extraction or re-analysis was not performed and the data have been reported.

Method(s) 8081A: DCB Surrogate recovery for this sample was outside the upper control limit, on the secondary column. This sample did not contain any target analytes; therefore, re-extraction and/or re-analysis was not performed.B-6 5.5-3'

Method(s) 8081A: The continuing calibration verification (CCV) for analytical batch 180567 recovered outside control limits for Decachlorobiphenyl (DCB) on the primary column but within the control limits on the secondary column and also, TCMX is within the control limits on both columns, thus, the data have been qualified and reported.

Method(s) 8081A: The closing calibration verification (CCV) for analytical batch 180567 recovered outside control limits for Decachlorobiphenyl (DCB) on the primary column but within the control limits on the secondary column and also, TCMX is within the control limits on both columns, thus, the data have been qualified and reported.

Job ID: 460-62522-1 (Continued)

Laboratory: TestAmerica Edison (Continued)

No other analytical or quality issues were noted.

Metals
No analytical or quality issues were noted.

General Chemistry
No analytical or quality issues were noted.

Organic Prep
No analytical or quality issues were noted.

VOA Prep
No analytical or quality issues were noted.

Client Sample Results

Client: Schnabel Engineering
Project/Site: NAVFAC DLA

TestAmerica Job ID: 460-62522-1

Client Sample ID: B-6 0.5-3'

Date Collected: 09/06/13 08:50
Date Received: 09/06/13 15:21

Lab Sample ID: 460-62522-1

Matrix: Solid
Percent Solids: 87.2

Method: 8260B - Volatile Organic Compounds (GC/MS)

Analyte	Result	Qualifier	RL	MDL	Unit	D	Prepared	Analyzed	Dil Fac
Benzene	ND		26	2.2	ug/Kg	☼	09/07/13 13:09	09/11/13 03:29	50
Toluene	ND		26	3.9	ug/Kg	☼	09/07/13 13:09	09/11/13 03:29	50
Ethylbenzene	ND		26	2.5	ug/Kg	☼	09/07/13 13:09	09/11/13 03:29	50
Xylenes, Total	ND		79	9.5	ug/Kg	☼	09/07/13 13:09	09/11/13 03:29	50

Surrogate	*%Recovery*	*Qualifier*	*Limits*	*Prepared*	*Analyzed*	*Dil Fac*
1,2-Dichloroethane-d4 (Surr)	*120*		*75 - 135*	*09/07/13 13:09*	*09/11/13 03:29*	*50*
Bromofluorobenzene	*123*		*72 - 133*	*09/07/13 13:09*	*09/11/13 03:29*	*50*
Toluene-d8 (Surr)	*98*		*59 - 150*	*09/07/13 13:09*	*09/11/13 03:29*	*50*
Dibromofluoromethane (Surr)	*107*		*70 - 130*	*09/07/13 13:09*	*09/11/13 03:29*	*50*

Method: 8260B - Volatile Organic Compounds (GC/MS) - TCLP

Analyte	Result	Qualifier	RL	RL	Unit	D	Prepared	Analyzed	Dil Fac
Carbon tetrachloride	ND		0.010	0.010	mg/L			09/11/13 18:08	10
Chlorobenzene	ND		0.010	0.010	mg/L			09/11/13 18:08	10
Chloroform	ND		0.010	0.010	mg/L			09/11/13 18:08	10
1,4-Dichlorobenzene	ND		0.010	0.010	mg/L			09/11/13 18:08	10
1,2-Dichloroethane	ND		0.010	0.010	mg/L			09/11/13 18:08	10
1,1-Dichloroethene	ND		0.010	0.010	mg/L			09/11/13 18:08	10
2-Butanone	ND		0.050	0.050	mg/L			09/11/13 18:08	10
Tetrachloroethene	ND		0.010	0.010	mg/L			09/11/13 18:08	10
Trichloroethene	ND		0.010	0.010	mg/L			09/11/13 18:08	10
Vinyl chloride	ND		0.010	0.010	mg/L			09/11/13 18:08	10
Benzene	ND		0.010	0.010	mg/L			09/11/13 18:08	10

Surrogate	*%Recovery*	*Qualifier*	*Limits*	*Prepared*	*Analyzed*	*Dil Fac*
1,2-Dichloroethane-d4 (Surr)	*83*		*70 - 130*		*09/11/13 18:08*	*10*
Bromofluorobenzene	*97*		*70 - 130*		*09/11/13 18:08*	*10*
Toluene-d8 (Surr)	*89*		*70 - 130*		*09/11/13 18:08*	*10*
Dibromofluoromethane (Surr)	*87*		*70 - 130*		*09/11/13 18:08*	*10*

Method: 8270C - Semivolatile Organic Compounds (GC/MS) - TCLP

Analyte	Result	Qualifier	RL	RL	Unit	D	Prepared	Analyzed	Dil Fac
Pyridine	ND		0.040	0.040	mg/L		09/10/13 09:45	09/13/13 07:22	1
1,4-Dichlorobenzene	ND		0.040	0.040	mg/L		09/10/13 09:45	09/13/13 07:22	1
Hexachloroethane	ND		0.0040	0.0040	mg/L		09/10/13 09:45	09/13/13 07:22	1
Nitrobenzene	ND		0.0040	0.0040	mg/L		09/10/13 09:45	09/13/13 07:22	1
o-Cresol	ND		0.040	0.040	mg/L		09/10/13 09:45	09/13/13 07:22	1
m & p - Cresol	ND		0.040	0.040	mg/L		09/10/13 09:45	09/13/13 07:22	1
Pentachlorophenol	ND		0.12	0.12	mg/L		09/10/13 09:45	09/13/13 07:22	1
Hexachlorobutadiene	ND		0.0080	0.0080	mg/L		09/10/13 09:45	09/13/13 07:22	1
2,4-Dinitrotoluene	ND		0.0080	0.0080	mg/L		09/10/13 09:45	09/13/13 07:22	1
Hexachlorobenzene	ND		0.0040	0.0040	mg/L		09/10/13 09:45	09/13/13 07:22	1
2,4,5-Trichlorophenol	ND		0.040	0.040	mg/L		09/10/13 09:45	09/13/13 07:22	1
2,4,6-Trichlorophenol	ND		0.040	0.040	mg/L		09/10/13 09:45	09/13/13 07:22	1

Surrogate	*%Recovery*	*Qualifier*	*Limits*	*Prepared*	*Analyzed*	*Dil Fac*
2-Fluorobiphenyl	*67*		*53 - 108*	*09/10/13 09:45*	*09/13/13 07:22*	*1*
2-Fluorophenol	*40*		*10 - 65*	*09/10/13 09:45*	*09/13/13 07:22*	*1*
Phenol-d5	*30*		*10 - 48*	*09/10/13 09:45*	*09/13/13 07:22*	*1*

Client Sample Results

Client: Schnabel Engineering
Project/Site: NAVFAC DLA

TestAmerica Job ID: 460-62522-1

Client Sample ID: B-6 0.5-3'

Date Collected: 09/06/13 08:50
Date Received: 09/06/13 15:21

Lab Sample ID: 460-62522-1

Matrix: Solid

Method: 8270C - Semivolatile Organic Compounds (GC/MS) - TCLP (Continued)

Surrogate	%Recovery	Qualifier	Limits	Prepared	Analyzed	Dil Fac
Nitrobenzene-d5	78		56 - 112	09/10/13 09:45	09/13/13 07:22	1
2,4,6-Tribromophenol	85		46 - 122	09/10/13 09:45	09/13/13 07:22	1
Terphenyl-d14	84		50 - 122	09/10/13 09:45	09/13/13 07:22	1

Method: 8015B - Gasoline Range Organics - (GC)

Analyte	Result	Qualifier	RL	RL	Unit	D	Prepared	Analyzed	Dil Fac
GRO	ND		830	830	ug/Kg	☼	09/07/13 15:00	09/09/13 08:21	50

Surrogate	%Recovery	Qualifier	Limits	Prepared	Analyzed	Dil Fac
a,a,a-Trifluorotoluene	145	X	70 - 130	09/07/13 15:00	09/09/13 08:21	50

Method: 8015B - Diesel Range Organics (DRO) (GC)

Analyte	Result	Qualifier	RL	RL	Unit	D	Prepared	Analyzed	Dil Fac
Diesel Range Organics [C10-C28]	65		7.7	7.7	mg/Kg	☼	09/09/13 13:43	09/10/13 08:13	1

Surrogate	%Recovery	Qualifier	Limits	Prepared	Analyzed	Dil Fac
o-Terphenyl	90		52 - 134	09/09/13 13:43	09/10/13 08:13	1

Method: 8081A - Organochlorine Pesticides (GC) - TCLP

Analyte	Result	Qualifier	RL	RL	Unit	D	Prepared	Analyzed	Dil Fac
Chlordane	ND		0.0050	0.0050	mg/L		09/10/13 08:13	09/10/13 20:08	1
Endrin	ND		0.00050	0.00050	mg/L		09/10/13 08:13	09/10/13 20:08	1
gamma-BHC (Lindane)	ND		0.00050	0.00050	mg/L		09/10/13 08:13	09/10/13 20:08	1
Heptachlor	ND		0.00050	0.00050	mg/L		09/10/13 08:13	09/10/13 20:08	1
Heptachlor epoxide	ND		0.00050	0.00050	mg/L		09/10/13 08:13	09/10/13 20:08	1
Methoxychlor	ND		0.00050	0.00050	mg/L		09/10/13 08:13	09/10/13 20:08	1
Toxaphene	ND		0.0050	0.0050	mg/L		09/10/13 08:13	09/10/13 20:08	1

Surrogate	%Recovery	Qualifier	Limits	Prepared	Analyzed	Dil Fac
Tetrachloro-m-xylene	135		46 - 140	09/10/13 08:13	09/10/13 20:08	1
Tetrachloro-m-xylene	119		46 - 140	09/10/13 08:13	09/10/13 20:08	1
DCB Decachlorobiphenyl	176	X	55 - 150	09/10/13 08:13	09/10/13 20:08	1
DCB Decachlorobiphenyl	154	X	55 - 150	09/10/13 08:13	09/10/13 20:08	1

Method: 8151A - Herbicides (GC) - TCLP

Analyte	Result	Qualifier	RL	RL	Unit	D	Prepared	Analyzed	Dil Fac
2,4-D	ND		0.017	0.017	mg/L		09/10/13 21:19	09/12/13 11:07	1
Silvex (2,4,5-TP)	ND		0.017	0.017	mg/L		09/10/13 21:19	09/12/13 11:07	1

Surrogate	%Recovery	Qualifier	Limits	Prepared	Analyzed	Dil Fac
2,4-Dichlorophenylacetic acid	107		72 - 145	09/10/13 21:19	09/12/13 11:07	1
2,4-Dichlorophenylacetic acid	111		72 - 145	09/10/13 21:19	09/12/13 11:07	1

Method: 6010B - Metals (ICP) - TCLP

Analyte	Result	Qualifier	RL	RL	Unit	D	Prepared	Analyzed	Dil Fac
Arsenic	ND		0.025	0.025	mg/L		09/11/13 09:33	09/13/13 11:57	5
Barium	ND		1.0	1.0	mg/L		09/11/13 09:33	09/13/13 11:57	5
Cadmium	ND		0.025	0.025	mg/L		09/11/13 09:33	09/13/13 11:57	5
Chromium	ND		0.050	0.050	mg/L		09/11/13 09:33	09/13/13 11:57	5
Lead	0.17		0.025	0.025	mg/L		09/11/13 09:33	09/13/13 11:57	5
Selenium	ND		0.050	0.050	mg/L		09/11/13 09:33	09/13/13 11:57	5

Client Sample Results

Client: Schnabel Engineering
Project/Site: NAVFAC DLA

TestAmerica Job ID: 460-62522-1

Client Sample ID: B-6 0.5-3'

Lab Sample ID: 460-62522-1
Date Collected: 09/06/13 08:50
Matrix: Solid
Date Received: 09/06/13 15:21

Method: 6010B - Metals (ICP) - TCLP (Continued)

Analyte	Result	Qualifier	RL	RL	Unit	D	Prepared	Analyzed	Dil Fac
Silver	ND		0.050	0.050	mg/L		09/11/13 09:33	09/13/13 11:57	5

Method: 7470A - Mercury (CVAA) - TCLP

Analyte	Result	Qualifier	RL	RL	Unit	D	Prepared	Analyzed	Dil Fac
Mercury	ND		0.00020	0.00020	mg/L		09/11/13 06:20	09/11/13 11:37	1

General Chemistry

Analyte	Result	Qualifier	RL	RL	Unit	D	Prepared	Analyzed	Dil Fac
Percent Moisture	**13**		1.0	1.0	%			09/09/13 16:11	1
Percent Solids	**87**		1.0	1.0	%			09/09/13 16:11	1

Client Sample ID: B-6 3-6'

Lab Sample ID: 460-62522-2
Date Collected: 09/06/13 09:00
Matrix: Solid
Date Received: 09/06/13 15:21
Percent Solids: 84.2

Method: 8260B - Volatile Organic Compounds (GC/MS)

Analyte	Result	Qualifier	RL	MDL	Unit	D	Prepared	Analyzed	Dil Fac
Benzene	ND		34	2.8	ug/Kg	☼	09/07/13 13:10	09/11/13 03:51	50
Toluene	ND		34	5.1	ug/Kg	☼	09/07/13 13:10	09/11/13 03:51	50
Ethylbenzene	ND		34	3.3	ug/Kg	☼	09/07/13 13:10	09/11/13 03:51	50
Xylenes, Total	ND		100	12	ug/Kg	☼	09/07/13 13:10	09/11/13 03:51	50

Surrogate	*%Recovery*	*Qualifier*	*Limits*	*Prepared*	*Analyzed*	*Dil Fac*
1,2-Dichloroethane-d4 (Surr)	*126*		*75 - 135*	*09/07/13 13:10*	*09/11/13 03:51*	*50*
Bromofluorobenzene	*127*		*72 - 133*	*09/07/13 13:10*	*09/11/13 03:51*	*50*
Toluene-d8 (Surr)	*102*		*59 - 150*	*09/07/13 13:10*	*09/11/13 03:51*	*50*
Dibromofluoromethane (Surr)	*110*		*70 - 130*	*09/07/13 13:10*	*09/11/13 03:51*	*50*

Method: 8260B - Volatile Organic Compounds (GC/MS) - TCLP

Analyte	Result	Qualifier	RL	RL	Unit	D	Prepared	Analyzed	Dil Fac
Carbon tetrachloride	ND		0.010	0.010	mg/L			09/11/13 18:33	10
Chlorobenzene	ND		0.010	0.010	mg/L			09/11/13 18:33	10
Chloroform	ND		0.010	0.010	mg/L			09/11/13 18:33	10
1,4-Dichlorobenzene	ND		0.010	0.010	mg/L			09/11/13 18:33	10
1,2-Dichloroethane	ND		0.010	0.010	mg/L			09/11/13 18:33	10
1,1-Dichloroethene	ND		0.010	0.010	mg/L			09/11/13 18:33	10
2-Butanone	ND		0.050	0.050	mg/L			09/11/13 18:33	10
Tetrachloroethene	**0.058**		0.010	0.010	mg/L			09/11/13 18:33	10
Trichloroethene	ND		0.010	0.010	mg/L			09/11/13 18:33	10
Vinyl chloride	ND		0.010	0.010	mg/L			09/11/13 18:33	10
Benzene	ND		0.010	0.010	mg/L			09/11/13 18:33	10

Surrogate	*%Recovery*	*Qualifier*	*Limits*	*Prepared*	*Analyzed*	*Dil Fac*
1,2-Dichloroethane-d4 (Surr)	*94*		*70 - 130*		*09/11/13 18:33*	*10*
Bromofluorobenzene	*111*		*70 - 130*		*09/11/13 18:33*	*10*
Toluene-d8 (Surr)	*102*		*70 - 130*		*09/11/13 18:33*	*10*
Dibromofluoromethane (Surr)	*99*		*70 - 130*		*09/11/13 18:33*	*10*

Method: 8270C - Semivolatile Organic Compounds (GC/MS) - TCLP

Analyte	Result	Qualifier	RL	RL	Unit	D	Prepared	Analyzed	Dil Fac
Pyridine	ND		0.040	0.040	mg/L		09/10/13 09:45	09/13/13 07:48	1

Client Sample ID: B-6 3-6'

Date Collected: 09/06/13 09:00
Date Received: 09/06/13 15:21

Lab Sample ID: 460-62522-2

Matrix: Solid

Method: 8270C - Semivolatile Organic Compounds (GC/MS) - TCLP (Continued)

Analyte	Result	Qualifier	RL	RL	Unit	D	Prepared	Analyzed	Dil Fac
1,4-Dichlorobenzene	ND		0.040	0.040	mg/L		09/10/13 09:45	09/13/13 07:48	1
Hexachloroethane	ND		0.0040	0.0040	mg/L		09/10/13 09:45	09/13/13 07:48	1
Nitrobenzene	ND		0.0040	0.0040	mg/L		09/10/13 09:45	09/13/13 07:48	1
o-Cresol	ND		0.040	0.040	mg/L		09/10/13 09:45	09/13/13 07:48	1
m & p - Cresol	ND		0.040	0.040	mg/L		09/10/13 09:45	09/13/13 07:48	1
Pentachlorophenol	ND		0.12	0.12	mg/L		09/10/13 09:45	09/13/13 07:48	1
Hexachlorobutadiene	ND		0.0080	0.0080	mg/L		09/10/13 09:45	09/13/13 07:48	1
2,4-Dinitrotoluene	ND		0.0080	0.0080	mg/L		09/10/13 09:45	09/13/13 07:48	1
Hexachlorobenzene	ND		0.0040	0.0040	mg/L		09/10/13 09:45	09/13/13 07:48	1
2,4,5-Trichlorophenol	ND		0.040	0.040	mg/L		09/10/13 09:45	09/13/13 07:48	1
2,4,6-Trichlorophenol	ND		0.040	0.040	mg/L		09/10/13 09:45	09/13/13 07:48	1

Surrogate	*%Recovery*	*Qualifier*	*Limits*	*Prepared*	*Analyzed*	*Dil Fac*
2-Fluorobiphenyl	*76*		*53 - 108*	*09/10/13 09:45*	*09/13/13 07:48*	*1*
2-Fluorophenol	*49*		*10 - 65*	*09/10/13 09:45*	*09/13/13 07:48*	*1*
Phenol-d5	*37*		*10 - 48*	*09/10/13 09:45*	*09/13/13 07:48*	*1*
Nitrobenzene-d5	*80*		*56 - 112*	*09/10/13 09:45*	*09/13/13 07:48*	*1*
2,4,6-Tribromophenol	*91*		*46 - 122*	*09/10/13 09:45*	*09/13/13 07:48*	*1*
Terphenyl-d14	*86*		*50 - 122*	*09/10/13 09:45*	*09/13/13 07:48*	*1*

Method: 8015B - Gasoline Range Organics - (GC)

Analyte	Result	Qualifier	RL	RL	Unit	D	Prepared	Analyzed	Dil Fac
GRO	ND		820	820	ug/Kg	☼	09/07/13 15:01	09/09/13 08:52	50

Surrogate	*%Recovery*	*Qualifier*	*Limits*	*Prepared*	*Analyzed*	*Dil Fac*
a,a,a-Trifluorotoluene	*103*		*70 - 130*	*09/07/13 15:01*	*09/09/13 08:52*	*50*

Method: 8015B - Diesel Range Organics (DRO) (GC)

Analyte	Result	Qualifier	RL	RL	Unit	D	Prepared	Analyzed	Dil Fac
Diesel Range Organics [C10-C28]	**9.3**		7.9	7.9	mg/Kg	☼	09/09/13 13:43	09/10/13 08:28	1

Surrogate	*%Recovery*	*Qualifier*	*Limits*	*Prepared*	*Analyzed*	*Dil Fac*
o-Terphenyl	*90*		*52 - 134*	*09/09/13 13:43*	*09/10/13 08:28*	*1*

Method: 8081A - Organochlorine Pesticides (GC) - TCLP

Analyte	Result	Qualifier	RL	RL	Unit	D	Prepared	Analyzed	Dil Fac
Chlordane	ND		0.0050	0.0050	mg/L		09/10/13 08:13	09/10/13 19:52	1
Endrin	ND		0.00050	0.00050	mg/L		09/10/13 08:13	09/10/13 19:52	1
gamma-BHC (Lindane)	ND		0.00050	0.00050	mg/L		09/10/13 08:13	09/10/13 19:52	1
Heptachlor	ND		0.00050	0.00050	mg/L		09/10/13 08:13	09/10/13 19:52	1
Heptachlor epoxide	ND		0.00050	0.00050	mg/L		09/10/13 08:13	09/10/13 19:52	1
Methoxychlor	ND		0.00050	0.00050	mg/L		09/10/13 08:13	09/10/13 19:52	1
Toxaphene	ND		0.0050	0.0050	mg/L		09/10/13 08:13	09/10/13 19:52	1

Surrogate	*%Recovery*	*Qualifier*	*Limits*	*Prepared*	*Analyzed*	*Dil Fac*
Tetrachloro-m-xylene	*137*		*46 - 140*	*09/10/13 08:13*	*09/10/13 19:52*	*1*
Tetrachloro-m-xylene	*122*		*46 - 140*	*09/10/13 08:13*	*09/10/13 19:52*	*1*
DCB Decachlorobiphenyl	*137*		*55 - 150*	*09/10/13 08:13*	*09/10/13 19:52*	*1*
DCB Decachlorobiphenyl	*158*	*X*	*55 - 150*	*09/10/13 08:13*	*09/10/13 19:52*	*1*

Client Sample Results

Client: Schnabel Engineering
Project/Site: NAVFAC DLA

TestAmerica Job ID: 460-62522-1

Client Sample ID: B-6 3-6'

Lab Sample ID: 460-62522-2
Date Collected: 09/06/13 09:00
Matrix: Solid
Date Received: 09/06/13 15:21

Method: 8151A - Herbicides (GC) - TCLP

Analyte	Result	Qualifier	RL	RL	Unit	D	Prepared	Analyzed	Dil Fac
2,4-D	ND		0.017	0.017	mg/L		09/10/13 21:19	09/12/13 11:23	1
Silvex (2,4,5-TP)	ND		0.017	0.017	mg/L		09/10/13 21:19	09/12/13 11:23	1

Surrogate	*%Recovery*	*Qualifier*	*Limits*	*Prepared*	*Analyzed*	*Dil Fac*
2,4-Dichlorophenylacetic acid	*103*		*72 - 145*	*09/10/13 21:19*	*09/12/13 11:23*	*1*
2,4-Dichlorophenylacetic acid	*110*		*72 - 145*	*09/10/13 21:19*	*09/12/13 11:23*	*1*

Method: 6010B - Metals (ICP) - TCLP

Analyte	Result	Qualifier	RL	RL	Unit	D	Prepared	Analyzed	Dil Fac
Arsenic	ND		0.025	0.025	mg/L		09/11/13 09:33	09/13/13 12:53	5
Barium	ND		1.0	1.0	mg/L		09/11/13 09:33	09/13/13 12:53	5
Cadmium	ND		0.025	0.025	mg/L		09/11/13 09:33	09/13/13 12:53	5
Chromium	ND		0.050	0.050	mg/L		09/11/13 09:33	09/13/13 12:53	5
Lead	**0.15**		0.025	0.025	mg/L		09/11/13 09:33	09/13/13 12:53	5
Selenium	ND		0.050	0.050	mg/L		09/11/13 09:33	09/13/13 12:53	5
Silver	ND		0.050	0.050	mg/L		09/11/13 09:33	09/13/13 12:53	5

Method: 7470A - Mercury (CVAA) - TCLP

Analyte	Result	Qualifier	RL	RL	Unit	D	Prepared	Analyzed	Dil Fac
Mercury	ND		0.00020	0.00020	mg/L		09/11/13 06:20	09/11/13 11:40	1

General Chemistry

Analyte	Result	Qualifier	RL	RL	Unit	D	Prepared	Analyzed	Dil Fac
Percent Moisture	**16**		1.0	1.0	%			09/09/13 16:11	1
Percent Solids	**84**		1.0	1.0	%			09/09/13 16:11	1

Client Sample ID: B-8 0.5-3'

Lab Sample ID: 460-62522-3
Date Collected: 09/06/13 09:55
Matrix: Solid
Date Received: 09/06/13 15:21
Percent Solids: 87.9

Method: 8260B - Volatile Organic Compounds (GC/MS)

Analyte	Result	Qualifier	RL	MDL	Unit	D	Prepared	Analyzed	Dil Fac
Benzene	ND		32	2.7	ug/Kg	☼	09/07/13 13:10	09/11/13 04:14	50
Toluene	ND		32	4.8	ug/Kg	☼	09/07/13 13:10	09/11/13 04:14	50
Ethylbenzene	ND		32	3.1	ug/Kg	☼	09/07/13 13:10	09/11/13 04:14	50
Xylenes, Total	ND		96	12	ug/Kg	☼	09/07/13 13:10	09/11/13 04:14	50

Surrogate	*%Recovery*	*Qualifier*	*Limits*	*Prepared*	*Analyzed*	*Dil Fac*
1,2-Dichloroethane-d4 (Surr)	*118*		*75 - 135*	*09/07/13 13:10*	*09/11/13 04:14*	*50*
Bromofluorobenzene	*116*		*72 - 133*	*09/07/13 13:10*	*09/11/13 04:14*	*50*
Toluene-d8 (Surr)	*93*		*59 - 150*	*09/07/13 13:10*	*09/11/13 04:14*	*50*
Dibromofluoromethane (Surr)	*103*		*70 - 130*	*09/07/13 13:10*	*09/11/13 04:14*	*50*

Method: 8260B - Volatile Organic Compounds (GC/MS) - TCLP

Analyte	Result	Qualifier	RL	RL	Unit	D	Prepared	Analyzed	Dil Fac
Carbon tetrachloride	ND		0.010	0.010	mg/L			09/11/13 18:58	10
Chlorobenzene	ND		0.010	0.010	mg/L			09/11/13 18:58	10
Chloroform	ND		0.010	0.010	mg/L			09/11/13 18:58	10
1,4-Dichlorobenzene	ND		0.010	0.010	mg/L			09/11/13 18:58	10
1,2-Dichloroethane	ND		0.010	0.010	mg/L			09/11/13 18:58	10
1,1-Dichloroethene	ND		0.010	0.010	mg/L			09/11/13 18:58	10

Client Sample Results

Client: Schnabel Engineering
Project/Site: NAVFAC DLA

TestAmerica Job ID: 460-62522-1

Client Sample ID: B-8 0.5-3'

Date Collected: 09/06/13 09:55
Date Received: 09/06/13 15:21

Lab Sample ID: 460-62522-3

Matrix: Solid

Method: 8260B - Volatile Organic Compounds (GC/MS) - TCLP (Continued)

Analyte	Result	Qualifier	RL	RL	Unit	D	Prepared	Analyzed	Dil Fac
2-Butanone	ND		0.050	0.050	mg/L			09/11/13 18:58	10
Tetrachloroethene	ND		0.010	0.010	mg/L			09/11/13 18:58	10
Trichloroethene	ND		0.010	0.010	mg/L			09/11/13 18:58	10
Vinyl chloride	ND		0.010	0.010	mg/L			09/11/13 18:58	10
Benzene	ND		0.010	0.010	mg/L			09/11/13 18:58	10

Surrogate	*%Recovery*	*Qualifier*	*Limits*	*Prepared*	*Analyzed*	*Dil Fac*
1,2-Dichloroethane-d4 (Surr)	*82*		*70 - 130*		*09/11/13 18:58*	*10*
Bromofluorobenzene	*97*		*70 - 130*		*09/11/13 18:58*	*10*
Toluene-d8 (Surr)	*88*		*70 - 130*		*09/11/13 18:58*	*10*
Dibromofluoromethane (Surr)	*85*		*70 - 130*		*09/11/13 18:58*	*10*

Method: 8270C - Semivolatile Organic Compounds (GC/MS) - TCLP

Analyte	Result	Qualifier	RL	RL	Unit	D	Prepared	Analyzed	Dil Fac
Pyridine	ND		0.040	0.040	mg/L		09/10/13 09:45	09/13/13 08:14	1
1,4-Dichlorobenzene	ND		0.040	0.040	mg/L		09/10/13 09:45	09/13/13 08:14	1
Hexachloroethane	ND		0.0040	0.0040	mg/L		09/10/13 09:45	09/13/13 08:14	1
Nitrobenzene	ND		0.0040	0.0040	mg/L		09/10/13 09:45	09/13/13 08:14	1
o-Cresol	ND		0.040	0.040	mg/L		09/10/13 09:45	09/13/13 08:14	1
m & p - Cresol	ND		0.040	0.040	mg/L		09/10/13 09:45	09/13/13 08:14	1
Pentachlorophenol	ND		0.12	0.12	mg/L		09/10/13 09:45	09/13/13 08:14	1
Hexachlorobutadiene	ND		0.0080	0.0080	mg/L		09/10/13 09:45	09/13/13 08:14	1
2,4-Dinitrotoluene	ND		0.0080	0.0080	mg/L		09/10/13 09:45	09/13/13 08:14	1
Hexachlorobenzene	ND		0.0040	0.0040	mg/L		09/10/13 09:45	09/13/13 08:14	1
2,4,5-Trichlorophenol	ND		0.040	0.040	mg/L		09/10/13 09:45	09/13/13 08:14	1
2,4,6-Trichlorophenol	ND		0.040	0.040	mg/L		09/10/13 09:45	09/13/13 08:14	1

Surrogate	*%Recovery*	*Qualifier*	*Limits*	*Prepared*	*Analyzed*	*Dil Fac*
2-Fluorobiphenyl	*65*		*53 - 108*	*09/10/13 09:45*	*09/13/13 08:14*	*1*
2-Fluorophenol	*39*		*10 - 65*	*09/10/13 09:45*	*09/13/13 08:14*	*1*
Phenol-d5	*30*		*10 - 48*	*09/10/13 09:45*	*09/13/13 08:14*	*1*
Nitrobenzene-d5	*73*		*56 - 112*	*09/10/13 09:45*	*09/13/13 08:14*	*1*
2,4,6-Tribromophenol	*75*		*46 - 122*	*09/10/13 09:45*	*09/13/13 08:14*	*1*
Terphenyl-d14	*76*		*50 - 122*	*09/10/13 09:45*	*09/13/13 08:14*	*1*

Method: 8015B - Gasoline Range Organics - (GC)

Analyte	Result	Qualifier	RL	RL	Unit	D	Prepared	Analyzed	Dil Fac
GRO	ND		860	860	ug/Kg	☼	09/07/13 15:01	09/09/13 09:23	50

Surrogate	*%Recovery*	*Qualifier*	*Limits*	*Prepared*	*Analyzed*	*Dil Fac*
a,a,a-Trifluorotoluene	*111*		*70 - 130*	*09/07/13 15:01*	*09/09/13 09:23*	*50*

Method: 8015B - Diesel Range Organics (DRO) (GC)

Analyte	Result	Qualifier	RL	RL	Unit	D	Prepared	Analyzed	Dil Fac
Diesel Range Organics [C10-C28]	**9.5**		7.6	7.6	mg/Kg	☼	09/09/13 13:43	09/10/13 08:43	1

Surrogate	*%Recovery*	*Qualifier*	*Limits*	*Prepared*	*Analyzed*	*Dil Fac*
o-Terphenyl	*79*		*52 - 134*	*09/09/13 13:43*	*09/10/13 08:43*	*1*

Client Sample Results

Client: Schnabel Engineering
Project/Site: NAVFAC DLA

TestAmerica Job ID: 460-62522-1

Client Sample ID: B-8 0.5-3'

Lab Sample ID: 460-62522-3
Date Collected: 09/06/13 09:55
Matrix: Solid
Date Received: 09/06/13 15:21

Method: 8081A - Organochlorine Pesticides (GC) - TCLP

Analyte	Result	Qualifier	RL	RL	Unit	D	Prepared	Analyzed	Dil Fac
Chlordane	ND		0.0050	0.0050	mg/L		09/10/13 08:13	09/10/13 19:36	1
Endrin	ND		0.00050	0.00050	mg/L		09/10/13 08:13	09/10/13 19:36	1
gamma-BHC (Lindane)	ND		0.00050	0.00050	mg/L		09/10/13 08:13	09/10/13 19:36	1
Heptachlor	ND		0.00050	0.00050	mg/L		09/10/13 08:13	09/10/13 19:36	1
Heptachlor epoxide	ND		0.00050	0.00050	mg/L		09/10/13 08:13	09/10/13 19:36	1
Methoxychlor	ND		0.00050	0.00050	mg/L		09/10/13 08:13	09/10/13 19:36	1
Toxaphene	ND		0.0050	0.0050	mg/L		09/10/13 08:13	09/10/13 19:36	1

Surrogate	*%Recovery*	*Qualifier*	*Limits*	*Prepared*	*Analyzed*	*Dil Fac*
Tetrachloro-m-xylene	*127*		*46 - 140*	*09/10/13 08:13*	*09/10/13 19:36*	*1*
Tetrachloro-m-xylene	*113*		*46 - 140*	*09/10/13 08:13*	*09/10/13 19:36*	*1*
DCB Decachlorobiphenyl	*104*		*55 - 150*	*09/10/13 08:13*	*09/10/13 19:36*	*1*
DCB Decachlorobiphenyl	*120*		*55 - 150*	*09/10/13 08:13*	*09/10/13 19:36*	*1*

Method: 8151A - Herbicides (GC) - TCLP

Analyte	Result	Qualifier	RL	RL	Unit	D	Prepared	Analyzed	Dil Fac
2,4-D	ND		0.017	0.017	mg/L		09/10/13 21:19	09/12/13 11:39	1
Silvex (2,4,5-TP)	ND		0.017	0.017	mg/L		09/10/13 21:19	09/12/13 11:39	1

Surrogate	*%Recovery*	*Qualifier*	*Limits*	*Prepared*	*Analyzed*	*Dil Fac*
2,4-Dichlorophenylacetic acid	*105*		*72 - 145*	*09/10/13 21:19*	*09/12/13 11:39*	*1*
2,4-Dichlorophenylacetic acid	*110*		*72 - 145*	*09/10/13 21:19*	*09/12/13 11:39*	*1*

Method: 6010B - Metals (ICP) - TCLP

Analyte	Result	Qualifier	RL	RL	Unit	D	Prepared	Analyzed	Dil Fac
Arsenic	ND		0.025	0.025	mg/L		09/11/13 09:33	09/13/13 13:05	5
Barium	ND		1.0	1.0	mg/L		09/11/13 09:33	09/13/13 13:05	5
Cadmium	ND		0.025	0.025	mg/L		09/11/13 09:33	09/13/13 13:05	5
Chromium	ND		0.050	0.050	mg/L		09/11/13 09:33	09/13/13 13:05	5
Lead	**0.13**		0.025	0.025	mg/L		09/11/13 09:33	09/13/13 13:05	5
Selenium	ND		0.050	0.050	mg/L		09/11/13 09:33	09/13/13 13:05	5
Silver	ND		0.050	0.050	mg/L		09/11/13 09:33	09/13/13 13:05	5

Method: 7470A - Mercury (CVAA) - TCLP

Analyte	Result	Qualifier	RL	RL	Unit	D	Prepared	Analyzed	Dil Fac
Mercury	ND		0.00020	0.00020	mg/L		09/11/13 06:20	09/11/13 11:41	1

General Chemistry

Analyte	Result	Qualifier	RL	RL	Unit	D	Prepared	Analyzed	Dil Fac
Percent Moisture	**12**		1.0	1.0	%			09/09/13 16:11	1
Percent Solids	**88**		1.0	1.0	%			09/09/13 16:11	1

Client Sample ID: B-8 3-6'

Lab Sample ID: 460-62522-4
Date Collected: 09/06/13 10:05
Matrix: Solid
Date Received: 09/06/13 15:21
Percent Solids: 90.1

Method: 8260B - Volatile Organic Compounds (GC/MS)

Analyte	Result	Qualifier	RL	MDL	Unit	D	Prepared	Analyzed	Dil Fac
Benzene	ND		32	2.6	ug/Kg	☼	09/07/13 13:11	09/11/13 11:11	50
Toluene	ND		32	4.8	ug/Kg	☼	09/07/13 13:11	09/11/13 11:11	50
Ethylbenzene	ND		32	3.1	ug/Kg	☼	09/07/13 13:11	09/11/13 11:11	50

Client Sample Results

Client: Schnabel Engineering
Project/Site: NAVFAC DLA

TestAmerica Job ID: 460-62522-1

Client Sample ID: B-8 3-6'

Date Collected: 09/06/13 10:05
Date Received: 09/06/13 15:21

Lab Sample ID: 460-62522-4

Matrix: Solid
Percent Solids: 90.1

Method: 8260B - Volatile Organic Compounds (GC/MS) (Continued)

Analyte	Result	Qualifier	RL	MDL	Unit	D	Prepared	Analyzed	Dil Fac
Xylenes, Total	ND		96	11	ug/Kg	☼	09/07/13 13:11	09/11/13 11:11	50

Surrogate	*%Recovery*	*Qualifier*	*Limits*	*Prepared*	*Analyzed*	*Dil Fac*
1,2-Dichloroethane-d4 (Surr)	*110*		*75 - 135*	*09/07/13 13:11*	*09/11/13 11:11*	*50*
Bromofluorobenzene	*112*		*72 - 133*	*09/07/13 13:11*	*09/11/13 11:11*	*50*
Toluene-d8 (Surr)	*90*		*59 - 150*	*09/07/13 13:11*	*09/11/13 11:11*	*50*
Dibromofluoromethane (Surr)	*102*		*70 - 130*	*09/07/13 13:11*	*09/11/13 11:11*	*50*

Method: 8260B - Volatile Organic Compounds (GC/MS) - TCLP

Analyte	Result	Qualifier	RL	RL	Unit	D	Prepared	Analyzed	Dil Fac
Carbon tetrachloride	ND		0.010	0.010	mg/L			09/11/13 19:23	10
Chlorobenzene	ND		0.010	0.010	mg/L			09/11/13 19:23	10
Chloroform	ND		0.010	0.010	mg/L			09/11/13 19:23	10
1,4-Dichlorobenzene	ND		0.010	0.010	mg/L			09/11/13 19:23	10
1,2-Dichloroethane	ND		0.010	0.010	mg/L			09/11/13 19:23	10
1,1-Dichloroethene	ND		0.010	0.010	mg/L			09/11/13 19:23	10
2-Butanone	ND		0.050	0.050	mg/L			09/11/13 19:23	10
Tetrachloroethene	ND		0.010	0.010	mg/L			09/11/13 19:23	10
Trichloroethene	ND		0.010	0.010	mg/L			09/11/13 19:23	10
Vinyl chloride	ND		0.010	0.010	mg/L			09/11/13 19:23	10
Benzene	ND		0.010	0.010	mg/L			09/11/13 19:23	10

Surrogate	*%Recovery*	*Qualifier*	*Limits*	*Prepared*	*Analyzed*	*Dil Fac*
1,2-Dichloroethane-d4 (Surr)	*82*		*70 - 130*		*09/11/13 19:23*	*10*
Bromofluorobenzene	*96*		*70 - 130*		*09/11/13 19:23*	*10*
Toluene-d8 (Surr)	*89*		*70 - 130*		*09/11/13 19:23*	*10*
Dibromofluoromethane (Surr)	*86*		*70 - 130*		*09/11/13 19:23*	*10*

Method: 8270C - Semivolatile Organic Compounds (GC/MS) - TCLP

Analyte	Result	Qualifier	RL	RL	Unit	D	Prepared	Analyzed	Dil Fac
Pyridine	ND		0.040	0.040	mg/L		09/10/13 09:45	09/14/13 15:13	1
1,4-Dichlorobenzene	ND		0.040	0.040	mg/L		09/10/13 09:45	09/14/13 15:13	1
Hexachloroethane	ND		0.0040	0.0040	mg/L		09/10/13 09:45	09/14/13 15:13	1
Nitrobenzene	ND		0.0040	0.0040	mg/L		09/10/13 09:45	09/14/13 15:13	1
o-Cresol	ND		0.040	0.040	mg/L		09/10/13 09:45	09/14/13 15:13	1
m & p - Cresol	ND		0.040	0.040	mg/L		09/10/13 09:45	09/14/13 15:13	1
Pentachlorophenol	ND		0.12	0.12	mg/L		09/10/13 09:45	09/14/13 15:13	1
Hexachlorobutadiene	ND		0.0080	0.0080	mg/L		09/10/13 09:45	09/14/13 15:13	1
2,4-Dinitrotoluene	ND		0.0080	0.0080	mg/L		09/10/13 09:45	09/14/13 15:13	1
Hexachlorobenzene	ND		0.0040	0.0040	mg/L		09/10/13 09:45	09/14/13 15:13	1
2,4,5-Trichlorophenol	ND		0.040	0.040	mg/L		09/10/13 09:45	09/14/13 15:13	1
2,4,6-Trichlorophenol	ND		0.040	0.040	mg/L		09/10/13 09:45	09/14/13 15:13	1

Surrogate	*%Recovery*	*Qualifier*	*Limits*	*Prepared*	*Analyzed*	*Dil Fac*
2-Fluorobiphenyl	*78*		*53 - 108*	*09/10/13 09:45*	*09/14/13 15:13*	*1*
2-Fluorophenol	*61*		*10 - 65*	*09/10/13 09:45*	*09/14/13 15:13*	*1*
Phenol-d5	*49*	*X*	*10 - 48*	*09/10/13 09:45*	*09/14/13 15:13*	*1*
Nitrobenzene-d5	*83*		*56 - 112*	*09/10/13 09:45*	*09/14/13 15:13*	*1*
2,4,6-Tribromophenol	*60*		*46 - 122*	*09/10/13 09:45*	*09/14/13 15:13*	*1*
Terphenyl-d14	*73*		*50 - 122*	*09/10/13 09:45*	*09/14/13 15:13*	*1*

Client Sample Results

Client: Schnabel Engineering
Project/Site: NAVFAC DLA

TestAmerica Job ID: 460-62522-1

Client Sample ID: B-8 3-6'

Date Collected: 09/06/13 10:05
Date Received: 09/06/13 15:21

Lab Sample ID: 460-62522-4

Matrix: Solid
Percent Solids: 90.1

Method: 8015B - Gasoline Range Organics - (GC)

Analyte	Result	Qualifier	RL	RL	Unit	D	Prepared	Analyzed	Dil Fac
GRO	ND		760	760	ug/Kg	☼	09/07/13 15:02	09/09/13 09:53	50

Surrogate	*%Recovery*	*Qualifier*	*Limits*	*Prepared*	*Analyzed*	*Dil Fac*
a,a,a-Trifluorotoluene	*107*		*70 - 130*	*09/07/13 15:02*	*09/09/13 09:53*	*50*

Method: 8015B - Diesel Range Organics (DRO) (GC)

Analyte	Result	Qualifier	RL	RL	Unit	D	Prepared	Analyzed	Dil Fac
Diesel Range Organics [C10-C28]	ND		7.4	7.4	mg/Kg	☼	09/09/13 13:43	09/10/13 08:58	1

Surrogate	*%Recovery*	*Qualifier*	*Limits*	*Prepared*	*Analyzed*	*Dil Fac*
o-Terphenyl	*79*		*52 - 134*	*09/09/13 13:43*	*09/10/13 08:58*	*1*

Method: 8081A - Organochlorine Pesticides (GC) - TCLP

Analyte	Result	Qualifier	RL	RL	Unit	D	Prepared	Analyzed	Dil Fac
Chlordane	ND		0.0050	0.0050	mg/L		09/10/13 08:13	09/10/13 19:21	1
Endrin	ND		0.00050	0.00050	mg/L		09/10/13 08:13	09/10/13 19:21	1
gamma-BHC (Lindane)	ND		0.00050	0.00050	mg/L		09/10/13 08:13	09/10/13 19:21	1
Heptachlor	ND		0.00050	0.00050	mg/L		09/10/13 08:13	09/10/13 19:21	1
Heptachlor epoxide	ND		0.00050	0.00050	mg/L		09/10/13 08:13	09/10/13 19:21	1
Methoxychlor	ND		0.00050	0.00050	mg/L		09/10/13 08:13	09/10/13 19:21	1
Toxaphene	ND		0.0050	0.0050	mg/L		09/10/13 08:13	09/10/13 19:21	1

Surrogate	*%Recovery*	*Qualifier*	*Limits*	*Prepared*	*Analyzed*	*Dil Fac*
Tetrachloro-m-xylene	*132*		*46 - 140*	*09/10/13 08:13*	*09/10/13 19:21*	*1*
Tetrachloro-m-xylene	*117*		*46 - 140*	*09/10/13 08:13*	*09/10/13 19:21*	*1*
DCB Decachlorobiphenyl	*105*		*55 - 150*	*09/10/13 08:13*	*09/10/13 19:21*	*1*
DCB Decachlorobiphenyl	*121*		*55 - 150*	*09/10/13 08:13*	*09/10/13 19:21*	*1*

Method: 8151A - Herbicides (GC) - TCLP

Analyte	Result	Qualifier	RL	RL	Unit	D	Prepared	Analyzed	Dil Fac
2,4-D	ND		0.017	0.017	mg/L		09/10/13 21:19	09/12/13 11:55	1
Silvex (2,4,5-TP)	ND		0.017	0.017	mg/L		09/10/13 21:19	09/12/13 11:55	1

Surrogate	*%Recovery*	*Qualifier*	*Limits*	*Prepared*	*Analyzed*	*Dil Fac*
2,4-Dichlorophenylacetic acid	*102*		*72 - 145*	*09/10/13 21:19*	*09/12/13 11:55*	*1*
2,4-Dichlorophenylacetic acid	*105*		*72 - 145*	*09/10/13 21:19*	*09/12/13 11:55*	*1*

Method: 6010B - Metals (ICP) - TCLP

Analyte	Result	Qualifier	RL	RL	Unit	D	Prepared	Analyzed	Dil Fac
Arsenic	ND		0.025	0.025	mg/L		09/11/13 09:33	09/13/13 13:09	5
Barium	ND		1.0	1.0	mg/L		09/11/13 09:33	09/13/13 13:09	5
Cadmium	ND		0.025	0.025	mg/L		09/11/13 09:33	09/13/13 13:09	5
Chromium	ND		0.050	0.050	mg/L		09/11/13 09:33	09/13/13 13:09	5
Lead	**0.32**		0.025	0.025	mg/L		09/11/13 09:33	09/13/13 13:09	5
Selenium	ND		0.050	0.050	mg/L		09/11/13 09:33	09/13/13 13:09	5
Silver	ND		0.050	0.050	mg/L		09/11/13 09:33	09/13/13 13:09	5

Method: 7470A - Mercury (CVAA) - TCLP

Analyte	Result	Qualifier	RL	RL	Unit	D	Prepared	Analyzed	Dil Fac
Mercury	ND		0.00020	0.00020	mg/L		09/11/13 06:20	09/11/13 11:43	1

Client Sample Results

Client: Schnabel Engineering
Project/Site: NAVFAC DLA

TestAmerica Job ID: 460-62522-1

Client Sample ID: B-8 3-6'

Lab Sample ID: 460-62522-4
Date Collected: 09/06/13 10:05
Matrix: Solid
Date Received: 09/06/13 15:21

General Chemistry

Analyte	Result	Qualifier	RL	RL	Unit	D	Prepared	Analyzed	Dil Fac
Percent Moisture	9.9		1.0	1.0	%			09/09/13 16:11	1
Percent Solids	90		1.0	1.0	%			09/09/13 16:11	1

Client Sample ID: B-2 0.5-3'

Lab Sample ID: 460-62522-5
Date Collected: 09/06/13 09:20
Matrix: Solid
Date Received: 09/06/13 15:21
Percent Solids: 80.0

Method: 8260B - Volatile Organic Compounds (GC/MS)

Analyte	Result	Qualifier	RL	MDL	Unit	D	Prepared	Analyzed	Dil Fac
Benzene	ND		39	3.2	ug/Kg	☼	09/07/13 13:12	09/11/13 11:33	50
Toluene	11	J	39	5.9	ug/Kg	☼	09/07/13 13:12	09/11/13 11:33	50
Ethylbenzene	ND		39	3.8	ug/Kg	☼	09/07/13 13:12	09/11/13 11:33	50
Xylenes, Total	18	J	120	14	ug/Kg	☼	09/07/13 13:12	09/11/13 11:33	50

Surrogate	*%Recovery*	*Qualifier*	*Limits*	*Prepared*	*Analyzed*	*Dil Fac*
1,2-Dichloroethane-d4 (Surr)	*99*		*75 - 135*	*09/07/13 13:12*	*09/11/13 11:33*	*50*
Bromofluorobenzene	*96*		*72 - 133*	*09/07/13 13:12*	*09/11/13 11:33*	*50*
Toluene-d8 (Surr)	*79*		*59 - 150*	*09/07/13 13:12*	*09/11/13 11:33*	*50*
Dibromofluoromethane (Surr)	*89*		*70 - 130*	*09/07/13 13:12*	*09/11/13 11:33*	*50*

Method: 8260B - Volatile Organic Compounds (GC/MS) - TCLP

Analyte	Result	Qualifier	RL	RL	Unit	D	Prepared	Analyzed	Dil Fac
Carbon tetrachloride	ND		0.010	0.010	mg/L			09/12/13 04:26	10
Chlorobenzene	ND		0.010	0.010	mg/L			09/12/13 04:26	10
Chloroform	ND		0.010	0.010	mg/L			09/12/13 04:26	10
1,4-Dichlorobenzene	ND		0.010	0.010	mg/L			09/12/13 04:26	10
1,2-Dichloroethane	ND		0.010	0.010	mg/L			09/12/13 04:26	10
1,1-Dichloroethene	ND		0.010	0.010	mg/L			09/12/13 04:26	10
2-Butanone	ND		0.050	0.050	mg/L			09/12/13 04:26	10
Tetrachloroethene	ND		0.010	0.010	mg/L			09/12/13 04:26	10
Trichloroethene	ND		0.010	0.010	mg/L			09/12/13 04:26	10
Vinyl chloride	ND		0.010	0.010	mg/L			09/12/13 04:26	10
Benzene	ND		0.010	0.010	mg/L			09/12/13 04:26	10

Surrogate	*%Recovery*	*Qualifier*	*Limits*	*Prepared*	*Analyzed*	*Dil Fac*
1,2-Dichloroethane-d4 (Surr)	*83*		*70 - 130*		*09/12/13 04:26*	*10*
Bromofluorobenzene	*82*		*70 - 130*		*09/12/13 04:26*	*10*
Toluene-d8 (Surr)	*90*		*70 - 130*		*09/12/13 04:26*	*10*
Dibromofluoromethane (Surr)	*83*		*70 - 130*		*09/12/13 04:26*	*10*

Method: 8270C - Semivolatile Organic Compounds (GC/MS) - TCLP

Analyte	Result	Qualifier	RL	RL	Unit	D	Prepared	Analyzed	Dil Fac
Pyridine	ND		0.040	0.040	mg/L		09/10/13 09:45	09/14/13 15:38	1
1,4-Dichlorobenzene	ND		0.040	0.040	mg/L		09/10/13 09:45	09/14/13 15:38	1
Hexachloroethane	ND		0.0040	0.0040	mg/L		09/10/13 09:45	09/14/13 15:38	1
Nitrobenzene	ND		0.0040	0.0040	mg/L		09/10/13 09:45	09/14/13 15:38	1
o-Cresol	ND		0.040	0.040	mg/L		09/10/13 09:45	09/14/13 15:38	1
m & p - Cresol	ND		0.040	0.040	mg/L		09/10/13 09:45	09/14/13 15:38	1
Pentachlorophenol	ND		0.12	0.12	mg/L		09/10/13 09:45	09/14/13 15:38	1
Hexachlorobutadiene	ND		0.0080	0.0080	mg/L		09/10/13 09:45	09/14/13 15:38	1
2,4-Dinitrotoluene	ND		0.0080	0.0080	mg/L		09/10/13 09:45	09/14/13 15:38	1

Client Sample Results

Client: Schnabel Engineering
Project/Site: NAVFAC DLA

TestAmerica Job ID: 460-62522-1

Client Sample ID: B-2 0.5-3'

Date Collected: 09/06/13 09:20
Date Received: 09/06/13 15:21

Lab Sample ID: 460-62522-5

Matrix: Solid

Method: 8270C - Semivolatile Organic Compounds (GC/MS) - TCLP (Continued)

Analyte	Result	Qualifier	RL	RL	Unit	D	Prepared	Analyzed	Dil Fac
Hexachlorobenzene	ND		0.0040	0.0040	mg/L		09/10/13 09:45	09/14/13 15:38	1
2,4,5-Trichlorophenol	ND		0.040	0.040	mg/L		09/10/13 09:45	09/14/13 15:38	1
2,4,6-Trichlorophenol	ND		0.040	0.040	mg/L		09/10/13 09:45	09/14/13 15:38	1

Surrogate	*%Recovery*	*Qualifier*	*Limits*	*Prepared*	*Analyzed*	*Dil Fac*
2-Fluorobiphenyl	*84*		*53 - 108*	*09/10/13 09:45*	*09/14/13 15:38*	*1*
2-Fluorophenol	*44*		*10 - 65*	*09/10/13 09:45*	*09/14/13 15:38*	*1*
Phenol-d5	*32*		*10 - 48*	*09/10/13 09:45*	*09/14/13 15:38*	*1*
Nitrobenzene-d5	*85*		*56 - 112*	*09/10/13 09:45*	*09/14/13 15:38*	*1*
2,4,6-Tribromophenol	*54*		*46 - 122*	*09/10/13 09:45*	*09/14/13 15:38*	*1*
Terphenyl-d14	*82*		*50 - 122*	*09/10/13 09:45*	*09/14/13 15:38*	*1*

Method: 8015B - Gasoline Range Organics - (GC)

Analyte	Result	Qualifier	RL	RL	Unit	D	Prepared	Analyzed	Dil Fac
GRO	ND		900	900	ug/Kg	☼	09/07/13 15:02	09/09/13 10:23	50

Surrogate	*%Recovery*	*Qualifier*	*Limits*	*Prepared*	*Analyzed*	*Dil Fac*
a,a,a-Trifluorotoluene	*105*		*70 - 130*	*09/07/13 15:02*	*09/09/13 10:23*	*50*

Method: 8015B - Diesel Range Organics (DRO) (GC)

Analyte	Result	Qualifier	RL	RL	Unit	D	Prepared	Analyzed	Dil Fac
Diesel Range Organics [C10-C28]	**8.8**		8.4	8.4	mg/Kg	☼	09/09/13 13:43	09/10/13 09:12	1

Surrogate	*%Recovery*	*Qualifier*	*Limits*	*Prepared*	*Analyzed*	*Dil Fac*
o-Terphenyl	*82*		*52 - 134*	*09/09/13 13:43*	*09/10/13 09:12*	*1*

Method: 8081A - Organochlorine Pesticides (GC) - TCLP

Analyte	Result	Qualifier	RL	RL	Unit	D	Prepared	Analyzed	Dil Fac
Chlordane	ND		0.0050	0.0050	mg/L		09/10/13 08:13	09/10/13 19:06	1
Endrin	ND		0.00050	0.00050	mg/L		09/10/13 08:13	09/10/13 19:06	1
gamma-BHC (Lindane)	ND		0.00050	0.00050	mg/L		09/10/13 08:13	09/10/13 19:06	1
Heptachlor	ND		0.00050	0.00050	mg/L		09/10/13 08:13	09/10/13 19:06	1
Heptachlor epoxide	ND		0.00050	0.00050	mg/L		09/10/13 08:13	09/10/13 19:06	1
Methoxychlor	ND		0.00050	0.00050	mg/L		09/10/13 08:13	09/10/13 19:06	1
Toxaphene	ND		0.0050	0.0050	mg/L		09/10/13 08:13	09/10/13 19:06	1

Surrogate	*%Recovery*	*Qualifier*	*Limits*	*Prepared*	*Analyzed*	*Dil Fac*
Tetrachloro-m-xylene	*139*		*46 - 140*	*09/10/13 08:13*	*09/10/13 19:06*	*1*
Tetrachloro-m-xylene	*124*		*46 - 140*	*09/10/13 08:13*	*09/10/13 19:06*	*1*
DCB Decachlorobiphenyl	*147*		*55 - 150*	*09/10/13 08:13*	*09/10/13 19:06*	*1*
DCB Decachlorobiphenyl	*168*	*X*	*55 - 150*	*09/10/13 08:13*	*09/10/13 19:06*	*1*

Method: 8151A - Herbicides (GC) - TCLP

Analyte	Result	Qualifier	RL	RL	Unit	D	Prepared	Analyzed	Dil Fac
2,4-D	ND		0.017	0.017	mg/L		09/10/13 21:19	09/12/13 12:42	1
Silvex (2,4,5-TP)	ND		0.017	0.017	mg/L		09/10/13 21:19	09/12/13 12:42	1

Surrogate	*%Recovery*	*Qualifier*	*Limits*	*Prepared*	*Analyzed*	*Dil Fac*
2,4-Dichlorophenylacetic acid	*104*		*72 - 145*	*09/10/13 21:19*	*09/12/13 12:42*	*1*
2,4-Dichlorophenylacetic acid	*110*		*72 - 145*	*09/10/13 21:19*	*09/12/13 12:42*	*1*

Client Sample Results

Client: Schnabel Engineering
Project/Site: NAVFAC DLA

TestAmerica Job ID: 460-62522-1

Client Sample ID: B-2 0.5-3'

Lab Sample ID: 460-62522-5
Date Collected: 09/06/13 09:20
Matrix: Solid
Date Received: 09/06/13 15:21

Method: 6010B - Metals (ICP) - TCLP

Analyte	Result	Qualifier	RL	RL	Unit	D	Prepared	Analyzed	Dil Fac
Arsenic	ND		0.025	0.025	mg/L		09/11/13 09:33	09/13/13 13:13	5
Barium	ND		1.0	1.0	mg/L		09/11/13 09:33	09/13/13 13:13	5
Cadmium	ND		0.025	0.025	mg/L		09/11/13 09:33	09/13/13 13:13	5
Chromium	ND		0.050	0.050	mg/L		09/11/13 09:33	09/13/13 13:13	5
Lead	**0.090**		0.025	0.025	mg/L		09/11/13 09:33	09/13/13 13:13	5
Selenium	ND		0.050	0.050	mg/L		09/11/13 09:33	09/13/13 13:13	5
Silver	ND		0.050	0.050	mg/L		09/11/13 09:33	09/13/13 13:13	5

Method: 7470A - Mercury (CVAA) - TCLP

Analyte	Result	Qualifier	RL	RL	Unit	D	Prepared	Analyzed	Dil Fac
Mercury	ND		0.00020	0.00020	mg/L		09/11/13 06:20	09/11/13 11:45	1

General Chemistry

Analyte	Result	Qualifier	RL	RL	Unit	D	Prepared	Analyzed	Dil Fac
Percent Moisture	**20**		1.0	1.0	%			09/09/13 16:11	1
Percent Solids	**80**		1.0	1.0	%			09/09/13 16:11	1

Client Sample ID: B-2 3-6'

Lab Sample ID: 460-62522-6
Date Collected: 09/06/13 09:40
Matrix: Solid
Date Received: 09/06/13 15:21
Percent Solids: 70.6

Method: 8260B - Volatile Organic Compounds (GC/MS)

Analyte	Result	Qualifier	RL	MDL	Unit	D	Prepared	Analyzed	Dil Fac
Benzene	ND		43	3.5	ug/Kg	☼	09/07/13 13:12	09/11/13 11:56	50
Toluene	ND		43	6.4	ug/Kg	☼	09/07/13 13:12	09/11/13 11:56	50
Ethylbenzene	ND		43	4.1	ug/Kg	☼	09/07/13 13:12	09/11/13 11:56	50
Xylenes, Total	ND		130	15	ug/Kg	☼	09/07/13 13:12	09/11/13 11:56	50

Surrogate	*%Recovery*	*Qualifier*	*Limits*	*Prepared*	*Analyzed*	*Dil Fac*
1,2-Dichloroethane-d4 (Surr)	*102*		*75 - 135*	*09/07/13 13:12*	*09/11/13 11:56*	*50*
Bromofluorobenzene	*101*		*72 - 133*	*09/07/13 13:12*	*09/11/13 11:56*	*50*
Toluene-d8 (Surr)	*82*		*59 - 150*	*09/07/13 13:12*	*09/11/13 11:56*	*50*
Dibromofluoromethane (Surr)	*90*		*70 - 130*	*09/07/13 13:12*	*09/11/13 11:56*	*50*

Method: 8260B - Volatile Organic Compounds (GC/MS) - TCLP

Analyte	Result	Qualifier	RL	RL	Unit	D	Prepared	Analyzed	Dil Fac
Carbon tetrachloride	ND		0.010	0.010	mg/L			09/12/13 04:51	10
Chlorobenzene	ND		0.010	0.010	mg/L			09/12/13 04:51	10
Chloroform	ND		0.010	0.010	mg/L			09/12/13 04:51	10
1,4-Dichlorobenzene	ND		0.010	0.010	mg/L			09/12/13 04:51	10
1,2-Dichloroethane	ND		0.010	0.010	mg/L			09/12/13 04:51	10
1,1-Dichloroethene	ND		0.010	0.010	mg/L			09/12/13 04:51	10
2-Butanone	ND		0.050	0.050	mg/L			09/12/13 04:51	10
Tetrachloroethene	ND		0.010	0.010	mg/L			09/12/13 04:51	10
Trichloroethene	ND		0.010	0.010	mg/L			09/12/13 04:51	10
Vinyl chloride	ND		0.010	0.010	mg/L			09/12/13 04:51	10
Benzene	ND		0.010	0.010	mg/L			09/12/13 04:51	10

Surrogate	*%Recovery*	*Qualifier*	*Limits*	*Prepared*	*Analyzed*	*Dil Fac*
1,2-Dichloroethane-d4 (Surr)	*81*		*70 - 130*		*09/12/13 04:51*	*10*
Bromofluorobenzene	*100*		*70 - 130*		*09/12/13 04:51*	*10*

Client Sample ID: B-2 3-6'

Lab Sample ID: 460-62522-6

Date Collected: 09/06/13 09:40

Matrix: Solid

Date Received: 09/06/13 15:21

Method: 8260B - Volatile Organic Compounds (GC/MS) - TCLP (Continued)

Surrogate	%Recovery	Qualifier	Limits	Prepared	Analyzed	Dil Fac
Toluene-d8 (Surr)	85		70 - 130		09/12/13 04:51	10
Dibromofluoromethane (Surr)	86		70 - 130		09/12/13 04:51	10

Method: 8270C - Semivolatile Organic Compounds (GC/MS) - TCLP

Analyte	Result	Qualifier	RL	RL	Unit	D	Prepared	Analyzed	Dil Fac
Pyridine	ND		0.040	0.040	mg/L		09/10/13 09:45	09/14/13 16:04	1
1,4-Dichlorobenzene	ND		0.040	0.040	mg/L		09/10/13 09:45	09/14/13 16:04	1
Hexachloroethane	ND		0.0040	0.0040	mg/L		09/10/13 09:45	09/14/13 16:04	1
Nitrobenzene	ND		0.0040	0.0040	mg/L		09/10/13 09:45	09/14/13 16:04	1
o-Cresol	ND		0.040	0.040	mg/L		09/10/13 09:45	09/14/13 16:04	1
m & p - Cresol	ND		0.040	0.040	mg/L		09/10/13 09:45	09/14/13 16:04	1
Pentachlorophenol	ND		0.12	0.12	mg/L		09/10/13 09:45	09/14/13 16:04	1
Hexachlorobutadiene	ND		0.0080	0.0080	mg/L		09/10/13 09:45	09/14/13 16:04	1
2,4-Dinitrotoluene	ND		0.0080	0.0080	mg/L		09/10/13 09:45	09/14/13 16:04	1
Hexachlorobenzene	ND		0.0040	0.0040	mg/L		09/10/13 09:45	09/14/13 16:04	1
2,4,5-Trichlorophenol	ND		0.040	0.040	mg/L		09/10/13 09:45	09/14/13 16:04	1
2,4,6-Trichlorophenol	ND		0.040	0.040	mg/L		09/10/13 09:45	09/14/13 16:04	1

Surrogate	%Recovery	Qualifier	Limits	Prepared	Analyzed	Dil Fac
2-Fluorobiphenyl	88		53 - 108	09/10/13 09:45	09/14/13 16:04	1
2-Fluorophenol	47		10 - 65	09/10/13 09:45	09/14/13 16:04	1
Phenol-d5	34		10 - 48	09/10/13 09:45	09/14/13 16:04	1
Nitrobenzene-d5	87		56 - 112	09/10/13 09:45	09/14/13 16:04	1
2,4,6-Tribromophenol	57		46 - 122	09/10/13 09:45	09/14/13 16:04	1
Terphenyl-d14	86		50 - 122	09/10/13 09:45	09/14/13 16:04	1

Method: 8015B - Gasoline Range Organics - (GC)

Analyte	Result	Qualifier	RL	RL	Unit	D	Prepared	Analyzed	Dil Fac
GRO	ND		1100	1100	ug/Kg	☼	09/07/13 15:03	09/09/13 10:54	50

Surrogate	%Recovery	Qualifier	Limits	Prepared	Analyzed	Dil Fac
a,a,a-Trifluorotoluene	107		70 - 130	09/07/13 15:03	09/09/13 10:54	50

Method: 8015B - Diesel Range Organics (DRO) (GC)

Analyte	Result	Qualifier	RL	RL	Unit	D	Prepared	Analyzed	Dil Fac
Diesel Range Organics [C10-C28]	ND		9.5	9.5	mg/Kg	☼	09/09/13 13:43	09/10/13 10:02	1

Surrogate	%Recovery	Qualifier	Limits	Prepared	Analyzed	Dil Fac
o-Terphenyl	86		52 - 134	09/09/13 13:43	09/10/13 10:02	1

Method: 8081A - Organochlorine Pesticides (GC) - TCLP

Analyte	Result	Qualifier	RL	RL	Unit	D	Prepared	Analyzed	Dil Fac
Chlordane	ND		0.0050	0.0050	mg/L		09/10/13 08:13	09/10/13 18:50	1
Endrin	ND		0.00050	0.00050	mg/L		09/10/13 08:13	09/10/13 18:50	1
gamma-BHC (Lindane)	ND		0.00050	0.00050	mg/L		09/10/13 08:13	09/10/13 18:50	1
Heptachlor	ND		0.00050	0.00050	mg/L		09/10/13 08:13	09/10/13 18:50	1
Heptachlor epoxide	ND		0.00050	0.00050	mg/L		09/10/13 08:13	09/10/13 18:50	1
Methoxychlor	ND		0.00050	0.00050	mg/L		09/10/13 08:13	09/10/13 18:50	1
Toxaphene	ND		0.0050	0.0050	mg/L		09/10/13 08:13	09/10/13 18:50	1

Client Sample Results

Client: Schnabel Engineering
Project/Site: NAVFAC DLA

TestAmerica Job ID: 460-62522-1

Client Sample ID: B-2 3-6'

Lab Sample ID: 460-62522-6

Date Collected: 09/06/13 09:40
Matrix: Solid
Date Received: 09/06/13 15:21

Surrogate	*%Recovery*	*Qualifier*	*Limits*	*Prepared*	*Analyzed*	*Dil Fac*
Tetrachloro-m-xylene	*136*		*46 - 140*	*09/10/13 08:13*	*09/10/13 18:50*	*1*
Tetrachloro-m-xylene	*119*		*46 - 140*	*09/10/13 08:13*	*09/10/13 18:50*	*1*
DCB Decachlorobiphenyl	*132*		*55 - 150*	*09/10/13 08:13*	*09/10/13 18:50*	*1*
DCB Decachlorobiphenyl	*148*		*55 - 150*	*09/10/13 08:13*	*09/10/13 18:50*	*1*

Method: 8151A - Herbicides (GC) - TCLP

Analyte	Result	Qualifier	RL	RL	Unit	D	Prepared	Analyzed	Dil Fac
2,4-D	ND		0.017	0.017	mg/L		09/10/13 21:19	09/12/13 12:58	1
Silvex (2,4,5-TP)	ND		0.017	0.017	mg/L		09/10/13 21:19	09/12/13 12:58	1

Surrogate	*%Recovery*	*Qualifier*	*Limits*	*Prepared*	*Analyzed*	*Dil Fac*
2,4-Dichlorophenylacetic acid	*103*		*72 - 145*	*09/10/13 21:19*	*09/12/13 12:58*	*1*
2,4-Dichlorophenylacetic acid	*107*		*72 - 145*	*09/10/13 21:19*	*09/12/13 12:58*	*1*

Method: 6010B - Metals (ICP) - TCLP

Analyte	Result	Qualifier	RL	RL	Unit	D	Prepared	Analyzed	Dil Fac
Arsenic	ND		0.025	0.025	mg/L		09/11/13 09:33	09/13/13 13:16	5
Barium	ND		1.0	1.0	mg/L		09/11/13 09:33	09/13/13 13:16	5
Cadmium	ND		0.025	0.025	mg/L		09/11/13 09:33	09/13/13 13:16	5
Chromium	ND		0.050	0.050	mg/L		09/11/13 09:33	09/13/13 13:16	5
Lead	**0.10**		0.025	0.025	mg/L		09/11/13 09:33	09/13/13 13:16	5
Selenium	ND		0.050	0.050	mg/L		09/11/13 09:33	09/13/13 13:16	5
Silver	ND		0.050	0.050	mg/L		09/11/13 09:33	09/13/13 13:16	5

Method: 7470A - Mercury (CVAA) - TCLP

Analyte	Result	Qualifier	RL	RL	Unit	D	Prepared	Analyzed	Dil Fac
Mercury	ND		0.00020	0.00020	mg/L		09/11/13 06:20	09/11/13 11:47	1

General Chemistry

Analyte	Result	Qualifier	RL	RL	Unit	D	Prepared	Analyzed	Dil Fac
Percent Moisture	**29**		1.0	1.0	%			09/09/13 16:11	1
Percent Solids	**71**		1.0	1.0	%			09/09/13 16:11	1

Client Sample ID: B-11 0.5-3'

Lab Sample ID: 460-62522-7

Date Collected: 09/06/13 11:20
Matrix: Solid
Date Received: 09/06/13 15:21
Percent Solids: 84.2

Method: 8260B - Volatile Organic Compounds (GC/MS)

Analyte	Result	Qualifier	RL	MDL	Unit	D	Prepared	Analyzed	Dil Fac
Benzene	ND		36	2.9	ug/Kg	☼	09/07/13 13:13	09/11/13 05:46	50
Toluene	**5.9**	**J**	36	5.3	ug/Kg	☼	09/07/13 13:13	09/11/13 05:46	50
Ethylbenzene	ND		36	3.4	ug/Kg	☼	09/07/13 13:13	09/11/13 05:46	50
Xylenes, Total	**19**	**J**	110	13	ug/Kg	☼	09/07/13 13:13	09/11/13 05:46	50

Surrogate	*%Recovery*	*Qualifier*	*Limits*	*Prepared*	*Analyzed*	*Dil Fac*
1,2-Dichloroethane-d4 (Surr)	*132*		*75 - 135*	*09/07/13 13:13*	*09/11/13 05:46*	*50*
Bromofluorobenzene	*132*		*72 - 133*	*09/07/13 13:13*	*09/11/13 05:46*	*50*
Toluene-d8 (Surr)	*105*		*59 - 150*	*09/07/13 13:13*	*09/11/13 05:46*	*50*
Dibromofluoromethane (Surr)	*114*		*70 - 130*	*09/07/13 13:13*	*09/11/13 05:46*	*50*

Client Sample Results

Client: Schnabel Engineering
Project/Site: NAVFAC DLA

TestAmerica Job ID: 460-62522-1

Client Sample ID: B-11 0.5-3'

Date Collected: 09/06/13 11:20
Date Received: 09/06/13 15:21

Lab Sample ID: 460-62522-7

Matrix: Solid

Method: 8260B - Volatile Organic Compounds (GC/MS) - TCLP

Analyte	Result	Qualifier	RL	RL	Unit	D	Prepared	Analyzed	Dil Fac
Carbon tetrachloride	ND		0.010	0.010	mg/L			09/12/13 05:16	10
Chlorobenzene	ND		0.010	0.010	mg/L			09/12/13 05:16	10
Chloroform	ND		0.010	0.010	mg/L			09/12/13 05:16	10
1,4-Dichlorobenzene	ND		0.010	0.010	mg/L			09/12/13 05:16	10
1,2-Dichloroethane	ND		0.010	0.010	mg/L			09/12/13 05:16	10
1,1-Dichloroethene	ND		0.010	0.010	mg/L			09/12/13 05:16	10
2-Butanone	ND		0.050	0.050	mg/L			09/12/13 05:16	10
Tetrachloroethene	**0.016**		0.010	0.010	mg/L			09/12/13 05:16	10
Trichloroethene	ND		0.010	0.010	mg/L			09/12/13 05:16	10
Vinyl chloride	ND		0.010	0.010	mg/L			09/12/13 05:16	10
Benzene	ND		0.010	0.010	mg/L			09/12/13 05:16	10

Surrogate	*%Recovery*	*Qualifier*	*Limits*	*Prepared*	*Analyzed*	*Dil Fac*
1,2-Dichloroethane-d4 (Surr)	*88*		*70 - 130*		*09/12/13 05:16*	*10*
Bromofluorobenzene	*102*		*70 - 130*		*09/12/13 05:16*	*10*
Toluene-d8 (Surr)	*90*		*70 - 130*		*09/12/13 05:16*	*10*
Dibromofluoromethane (Surr)	*100*		*70 - 130*		*09/12/13 05:16*	*10*

Method: 8270C - Semivolatile Organic Compounds (GC/MS) - TCLP

Analyte	Result	Qualifier	RL	RL	Unit	D	Prepared	Analyzed	Dil Fac
Pyridine	ND		0.040	0.040	mg/L		09/10/13 09:45	09/14/13 17:20	1
1,4-Dichlorobenzene	ND		0.040	0.040	mg/L		09/10/13 09:45	09/14/13 17:20	1
Hexachloroethane	ND		0.0040	0.0040	mg/L		09/10/13 09:45	09/14/13 17:20	1
Nitrobenzene	ND		0.0040	0.0040	mg/L		09/10/13 09:45	09/14/13 17:20	1
o-Cresol	ND		0.040	0.040	mg/L		09/10/13 09:45	09/14/13 17:20	1
m & p - Cresol	ND		0.040	0.040	mg/L		09/10/13 09:45	09/14/13 17:20	1
Pentachlorophenol	ND		0.12	0.12	mg/L		09/10/13 09:45	09/14/13 17:20	1
Hexachlorobutadiene	ND		0.0080	0.0080	mg/L		09/10/13 09:45	09/14/13 17:20	1
2,4-Dinitrotoluene	ND		0.0080	0.0080	mg/L		09/10/13 09:45	09/14/13 17:20	1
Hexachlorobenzene	ND		0.0040	0.0040	mg/L		09/10/13 09:45	09/14/13 17:20	1
2,4,5-Trichlorophenol	ND		0.040	0.040	mg/L		09/10/13 09:45	09/14/13 17:20	1
2,4,6-Trichlorophenol	ND		0.040	0.040	mg/L		09/10/13 09:45	09/14/13 17:20	1

Surrogate	*%Recovery*	*Qualifier*	*Limits*	*Prepared*	*Analyzed*	*Dil Fac*
2-Fluorobiphenyl	*89*		*53 - 108*	*09/10/13 09:45*	*09/14/13 17:20*	*1*
2-Fluorophenol	*45*		*10 - 65*	*09/10/13 09:45*	*09/14/13 17:20*	*1*
Phenol-d5	*30*		*10 - 48*	*09/10/13 09:45*	*09/14/13 17:20*	*1*
Nitrobenzene-d5	*91*		*56 - 112*	*09/10/13 09:45*	*09/14/13 17:20*	*1*
2,4,6-Tribromophenol	*57*		*46 - 122*	*09/10/13 09:45*	*09/14/13 17:20*	*1*
Terphenyl-d14	*82*		*50 - 122*	*09/10/13 09:45*	*09/14/13 17:20*	*1*

Method: 8015B - Gasoline Range Organics - (GC)

Analyte	Result	Qualifier	RL	RL	Unit	D	Prepared	Analyzed	Dil Fac
GRO	ND		1200	1200	ug/Kg	☼	09/07/13 15:03	09/09/13 11:25	50

Surrogate	*%Recovery*	*Qualifier*	*Limits*	*Prepared*	*Analyzed*	*Dil Fac*
a,a,a-Trifluorotoluene	*107*		*70 - 130*	*09/07/13 15:03*	*09/09/13 11:25*	*50*

Method: 8015B - Diesel Range Organics (DRO) (GC)

Analyte	Result	Qualifier	RL	RL	Unit	D	Prepared	Analyzed	Dil Fac
Diesel Range Organics [C10-C28]	**84**		8.0	8.0	mg/Kg	☼	09/09/13 13:43	09/10/13 10:17	1

Client Sample Results

Client: Schnabel Engineering
Project/Site: NAVFAC DLA

TestAmerica Job ID: 460-62522-1

Client Sample ID: B-11 0.5-3'

Date Collected: 09/06/13 11:20
Date Received: 09/06/13 15:21

Lab Sample ID: 460-62522-7

Matrix: Solid
Percent Solids: 84.2

Surrogate	*%Recovery*	*Qualifier*	*Limits*	*Prepared*	*Analyzed*	*Dil Fac*
o-Terphenyl	*81*		*52 - 134*	*09/09/13 13:43*	*09/10/13 10:17*	*1*

Method: 8081A - Organochlorine Pesticides (GC) - TCLP

Analyte	Result	Qualifier	RL	RL	Unit	D	Prepared	Analyzed	Dil Fac
Chlordane	ND		0.0050	0.0050	mg/L		09/10/13 08:13	09/10/13 18:35	1
Endrin	ND		0.00050	0.00050	mg/L		09/10/13 08:13	09/10/13 18:35	1
gamma-BHC (Lindane)	ND		0.00050	0.00050	mg/L		09/10/13 08:13	09/10/13 18:35	1
Heptachlor	ND		0.00050	0.00050	mg/L		09/10/13 08:13	09/10/13 18:35	1
Heptachlor epoxide	ND		0.00050	0.00050	mg/L		09/10/13 08:13	09/10/13 18:35	1
Methoxychlor	ND		0.00050	0.00050	mg/L		09/10/13 08:13	09/10/13 18:35	1
Toxaphene	ND		0.0050	0.0050	mg/L		09/10/13 08:13	09/10/13 18:35	1

Surrogate	*%Recovery*	*Qualifier*	*Limits*	*Prepared*	*Analyzed*	*Dil Fac*
Tetrachloro-m-xylene	*125*		*46 - 140*	*09/10/13 08:13*	*09/10/13 18:35*	*1*
Tetrachloro-m-xylene	*111*		*46 - 140*	*09/10/13 08:13*	*09/10/13 18:35*	*1*
DCB Decachlorobiphenyl	*131*		*55 - 150*	*09/10/13 08:13*	*09/10/13 18:35*	*1*
DCB Decachlorobiphenyl	*149*		*55 - 150*	*09/10/13 08:13*	*09/10/13 18:35*	*1*

Method: 8151A - Herbicides (GC) - TCLP

Analyte	Result	Qualifier	RL	RL	Unit	D	Prepared	Analyzed	Dil Fac
2,4-D	ND		0.017	0.017	mg/L		09/10/13 21:19	09/12/13 13:13	1
Silvex (2,4,5-TP)	ND		0.017	0.017	mg/L		09/10/13 21:19	09/12/13 13:13	1

Surrogate	*%Recovery*	*Qualifier*	*Limits*	*Prepared*	*Analyzed*	*Dil Fac*
2,4-Dichlorophenylacetic acid	*100*		*72 - 145*	*09/10/13 21:19*	*09/12/13 13:13*	*1*
2,4-Dichlorophenylacetic acid	*102*		*72 - 145*	*09/10/13 21:19*	*09/12/13 13:13*	*1*

Method: 6010B - Metals (ICP) - TCLP

Analyte	Result	Qualifier	RL	RL	Unit	D	Prepared	Analyzed	Dil Fac
Arsenic	ND		0.025	0.025	mg/L		09/11/13 09:33	09/13/13 13:20	5
Barium	ND		1.0	1.0	mg/L		09/11/13 09:33	09/13/13 13:20	5
Cadmium	ND		0.025	0.025	mg/L		09/11/13 09:33	09/13/13 13:20	5
Chromium	ND		0.050	0.050	mg/L		09/11/13 09:33	09/13/13 13:20	5
Lead	**0.12**		0.025	0.025	mg/L		09/11/13 09:33	09/13/13 13:20	5
Selenium	ND		0.050	0.050	mg/L		09/11/13 09:33	09/13/13 13:20	5
Silver	ND		0.050	0.050	mg/L		09/11/13 09:33	09/13/13 13:20	5

Method: 7470A - Mercury (CVAA) - TCLP

Analyte	Result	Qualifier	RL	RL	Unit	D	Prepared	Analyzed	Dil Fac
Mercury	ND		0.00020	0.00020	mg/L		09/11/13 06:20	09/11/13 11:11	1

General Chemistry

Analyte	Result	Qualifier	RL	RL	Unit	D	Prepared	Analyzed	Dil Fac
Percent Moisture	**16**		1.0	1.0	%			09/09/13 16:11	1
Percent Solids	**84**		1.0	1.0	%			09/09/13 16:11	1

Client Sample Results

Client: Schnabel Engineering
Project/Site: NAVFAC DLA

TestAmerica Job ID: 460-62522-1

Client Sample ID: B-11 3-6'

Date Collected: 09/06/13 11:30
Date Received: 09/06/13 15:21

Lab Sample ID: 460-62522-8

Matrix: Solid
Percent Solids: 87.7

Method: 8260B - Volatile Organic Compounds (GC/MS)

Analyte	Result	Qualifier	RL	MDL	Unit	D	Prepared	Analyzed	Dil Fac
Benzene	ND		33	2.7	ug/Kg	☼	09/07/13 13:13	09/11/13 06:09	50
Toluene	ND		33	4.9	ug/Kg	☼	09/07/13 13:13	09/11/13 06:09	50
Ethylbenzene	ND		33	3.2	ug/Kg	☼	09/07/13 13:13	09/11/13 06:09	50
Xylenes, Total	ND		99	12	ug/Kg	☼	09/07/13 13:13	09/11/13 06:09	50

Surrogate	*%Recovery*	*Qualifier*	*Limits*	*Prepared*	*Analyzed*	*Dil Fac*
1,2-Dichloroethane-d4 (Surr)	*134*		*75 - 135*	*09/07/13 13:13*	*09/11/13 06:09*	*50*
Bromofluorobenzene	*133*		*72 - 133*	*09/07/13 13:13*	*09/11/13 06:09*	*50*
Toluene-d8 (Surr)	*107*		*59 - 150*	*09/07/13 13:13*	*09/11/13 06:09*	*50*
Dibromofluoromethane (Surr)	*114*		*70 - 130*	*09/07/13 13:13*	*09/11/13 06:09*	*50*

Method: 8260B - Volatile Organic Compounds (GC/MS) - TCLP

Analyte	Result	Qualifier	RL	RL	Unit	D	Prepared	Analyzed	Dil Fac
Carbon tetrachloride	ND		0.010	0.010	mg/L			09/11/13 17:42	10
Chlorobenzene	ND		0.010	0.010	mg/L			09/11/13 17:42	10
Chloroform	ND		0.010	0.010	mg/L			09/11/13 17:42	10
1,4-Dichlorobenzene	ND		0.010	0.010	mg/L			09/11/13 17:42	10
1,2-Dichloroethane	ND		0.010	0.010	mg/L			09/11/13 17:42	10
1,1-Dichloroethene	ND		0.010	0.010	mg/L			09/11/13 17:42	10
2-Butanone	ND		0.050	0.050	mg/L			09/11/13 17:42	10
Tetrachloroethene	ND		0.010	0.010	mg/L			09/11/13 17:42	10
Trichloroethene	ND		0.010	0.010	mg/L			09/11/13 17:42	10
Vinyl chloride	ND		0.010	0.010	mg/L			09/11/13 17:42	10
Benzene	ND		0.010	0.010	mg/L			09/11/13 17:42	10

Surrogate	*%Recovery*	*Qualifier*	*Limits*	*Prepared*	*Analyzed*	*Dil Fac*
1,2-Dichloroethane-d4 (Surr)	*85*		*70 - 130*		*09/11/13 17:42*	*10*
Bromofluorobenzene	*101*		*70 - 130*		*09/11/13 17:42*	*10*
Toluene-d8 (Surr)	*92*		*70 - 130*		*09/11/13 17:42*	*10*
Dibromofluoromethane (Surr)	*88*		*70 - 130*		*09/11/13 17:42*	*10*

Method: 8270C - Semivolatile Organic Compounds (GC/MS) - TCLP

Analyte	Result	Qualifier	RL	RL	Unit	D	Prepared	Analyzed	Dil Fac
Pyridine	ND		0.040	0.040	mg/L		09/10/13 09:45	09/17/13 21:57	1
1,4-Dichlorobenzene	ND		0.040	0.040	mg/L		09/10/13 09:45	09/17/13 21:57	1
Hexachloroethane	ND		0.0040	0.0040	mg/L		09/10/13 09:45	09/17/13 21:57	1
Nitrobenzene	ND		0.0040	0.0040	mg/L		09/10/13 09:45	09/17/13 21:57	1
o-Cresol	ND		0.040	0.040	mg/L		09/10/13 09:45	09/17/13 21:57	1
m & p - Cresol	ND		0.040	0.040	mg/L		09/10/13 09:45	09/17/13 21:57	1
Pentachlorophenol	ND		0.12	0.12	mg/L		09/10/13 09:45	09/17/13 21:57	1
Hexachlorobutadiene	ND		0.0080	0.0080	mg/L		09/10/13 09:45	09/17/13 21:57	1
2,4-Dinitrotoluene	ND		0.0080	0.0080	mg/L		09/10/13 09:45	09/17/13 21:57	1
Hexachlorobenzene	ND		0.0040	0.0040	mg/L		09/10/13 09:45	09/17/13 21:57	1
2,4,5-Trichlorophenol	ND		0.040	0.040	mg/L		09/10/13 09:45	09/17/13 21:57	1
2,4,6-Trichlorophenol	ND		0.040	0.040	mg/L		09/10/13 09:45	09/17/13 21:57	1

Surrogate	*%Recovery*	*Qualifier*	*Limits*	*Prepared*	*Analyzed*	*Dil Fac*
2-Fluorobiphenyl	*75*		*53 - 108*	*09/10/13 09:45*	*09/17/13 21:57*	*1*
2-Fluorophenol	*40*		*10 - 65*	*09/10/13 09:45*	*09/17/13 21:57*	*1*
Phenol-d5	*32*		*10 - 48*	*09/10/13 09:45*	*09/17/13 21:57*	*1*
Nitrobenzene-d5	*87*		*56 - 112*	*09/10/13 09:45*	*09/17/13 21:57*	*1*

Client Sample Results

Client: Schnabel Engineering
Project/Site: NAVFAC DLA

TestAmerica Job ID: 460-62522-1

Client Sample ID: B-11 3-6'

Date Collected: 09/06/13 11:30
Date Received: 09/06/13 15:21

Lab Sample ID: 460-62522-8

Matrix: Solid

Method: 8270C - Semivolatile Organic Compounds (GC/MS) - TCLP (Continued)

Surrogate	*%Recovery*	*Qualifier*	*Limits*	*Prepared*	*Analyzed*	*Dil Fac*
2,4,6-Tribromophenol	*72*		*46 - 122*	*09/10/13 09:45*	*09/17/13 21:57*	*1*
Terphenyl-d14	*86*		*50 - 122*	*09/10/13 09:45*	*09/17/13 21:57*	*1*

Method: 8015B - Gasoline Range Organics - (GC)

Analyte	Result	Qualifier	RL	RL	Unit	D	Prepared	Analyzed	Dil Fac
GRO	ND		820	820	ug/Kg	☼	09/07/13 15:04	09/09/13 11:55	50

Surrogate	*%Recovery*	*Qualifier*	*Limits*	*Prepared*	*Analyzed*	*Dil Fac*
a,a,a-Trifluorotoluene	*108*		*70 - 130*	*09/07/13 15:04*	*09/09/13 11:55*	*50*

Method: 8015B - Diesel Range Organics (DRO) (GC)

Analyte	Result	Qualifier	RL	RL	Unit	D	Prepared	Analyzed	Dil Fac
Diesel Range Organics [C10-C28]	ND		7.6	7.6	mg/Kg	☼	09/09/13 13:43	09/10/13 10:31	1

Surrogate	*%Recovery*	*Qualifier*	*Limits*	*Prepared*	*Analyzed*	*Dil Fac*
o-Terphenyl	*80*		*52 - 134*	*09/09/13 13:43*	*09/10/13 10:31*	*1*

Method: 8081A - Organochlorine Pesticides (GC) - TCLP

Analyte	Result	Qualifier	RL	RL	Unit	D	Prepared	Analyzed	Dil Fac
Chlordane	ND		0.0050	0.0050	mg/L		09/10/13 08:13	09/10/13 18:20	1
Endrin	ND		0.00050	0.00050	mg/L		09/10/13 08:13	09/10/13 18:20	1
gamma-BHC (Lindane)	ND		0.00050	0.00050	mg/L		09/10/13 08:13	09/10/13 18:20	1
Heptachlor	ND		0.00050	0.00050	mg/L		09/10/13 08:13	09/10/13 18:20	1
Heptachlor epoxide	ND		0.00050	0.00050	mg/L		09/10/13 08:13	09/10/13 18:20	1
Methoxychlor	ND		0.00050	0.00050	mg/L		09/10/13 08:13	09/10/13 18:20	1
Toxaphene	ND		0.0050	0.0050	mg/L		09/10/13 08:13	09/10/13 18:20	1

Surrogate	*%Recovery*	*Qualifier*	*Limits*	*Prepared*	*Analyzed*	*Dil Fac*
Tetrachloro-m-xylene	*122*		*46 - 140*	*09/10/13 08:13*	*09/10/13 18:20*	*1*
Tetrachloro-m-xylene	*109*		*46 - 140*	*09/10/13 08:13*	*09/10/13 18:20*	*1*
DCB Decachlorobiphenyl	*120*		*55 - 150*	*09/10/13 08:13*	*09/10/13 18:20*	*1*
DCB Decachlorobiphenyl	*136*		*55 - 150*	*09/10/13 08:13*	*09/10/13 18:20*	*1*

Method: 8151A - Herbicides (GC) - TCLP

Analyte	Result	Qualifier	RL	RL	Unit	D	Prepared	Analyzed	Dil Fac
2,4-D	ND		0.017	0.017	mg/L		09/10/13 21:19	09/12/13 13:29	1
Silvex (2,4,5-TP)	ND		0.017	0.017	mg/L		09/10/13 21:19	09/12/13 13:29	1

Surrogate	*%Recovery*	*Qualifier*	*Limits*	*Prepared*	*Analyzed*	*Dil Fac*
2,4-Dichlorophenylacetic acid	*88*		*72 - 145*	*09/10/13 21:19*	*09/12/13 13:29*	*1*
2,4-Dichlorophenylacetic acid	*89*		*72 - 145*	*09/10/13 21:19*	*09/12/13 13:29*	*1*

Method: 6010B - Metals (ICP) - TCLP

Analyte	Result	Qualifier	RL	RL	Unit	D	Prepared	Analyzed	Dil Fac
Arsenic	ND		0.025	0.025	mg/L		09/11/13 09:33	09/13/13 13:24	5
Barium	ND		1.0	1.0	mg/L		09/11/13 09:33	09/13/13 13:24	5
Cadmium	ND		0.025	0.025	mg/L		09/11/13 09:33	09/13/13 13:24	5
Chromium	ND		0.050	0.050	mg/L		09/11/13 09:33	09/13/13 13:24	5
Lead	**0.23**		0.025	0.025	mg/L		09/11/13 09:33	09/13/13 13:24	5
Selenium	ND		0.050	0.050	mg/L		09/11/13 09:33	09/13/13 13:24	5
Silver	ND		0.050	0.050	mg/L		09/11/13 09:33	09/13/13 13:24	5

Client Sample Results

Client: Schnabel Engineering
Project/Site: NAVFAC DLA

TestAmerica Job ID: 460-62522-1

Client Sample ID: B-11 3-6'

Lab Sample ID: 460-62522-8

Date Collected: 09/06/13 11:30

Matrix: Solid

Date Received: 09/06/13 15:21

Method: 7470A - Mercury (CVAA) - TCLP

Analyte	Result	Qualifier	RL	RL	Unit	D	Prepared	Analyzed	Dil Fac
Mercury	0.00025		0.00020	0.00020	mg/L		09/11/13 06:20	09/11/13 11:52	1

General Chemistry

Analyte	Result	Qualifier	RL	RL	Unit	D	Prepared	Analyzed	Dil Fac
Percent Moisture	12		1.0	1.0	%			09/09/13 16:11	1
Percent Solids	88		1.0	1.0	%			09/09/13 16:11	1

Lab Chronicle

Client: Schnabel Engineering
Project/Site: NAVFAC DLA

TestAmerica Job ID: 460-62522-1

Client Sample ID: B-6 0.5-3'

Lab Sample ID: 460-62522-1

Date Collected: 09/06/13 08:50
Matrix: Solid
Date Received: 09/06/13 15:21
Percent Solids: 87.2

Prep Type	Batch Type	Batch Method	Run	Dilution Factor	Batch Number	Prepared or Analyzed	Analyst	Lab
Total/NA	Prep	5035			180178	09/07/13 13:09	DAS	TAL EDI
Total/NA	Analysis	8260B		50	180624	09/11/13 03:29	KLB	TAL EDI
TCLP	Leach	1311			180159	09/07/13 11:05	GAT	TAL EDI
TCLP	Analysis	8260B		10	180649	09/11/13 18:08	SZD	TAL EDI
TCLP	Leach	1311			180227	09/08/13 14:00	JAK	TAL EDI
TCLP	Prep	3510C			180513	09/10/13 09:45	MDC	TAL EDI
TCLP	Analysis	8270C		1	181168	09/13/13 07:22	VJR	TAL EDI
Total/NA	Prep	5035			180194	09/07/13 15:00	DAS	TAL EDI
Total/NA	Analysis	8015B		50	180263	09/09/13 08:21	FAM	TAL EDI
Total/NA	Prep	3546			180368	09/09/13 13:43	FHW	TAL EDI
Total/NA	Analysis	8015B		1	180456	09/10/13 08:13	HJK	TAL EDI
TCLP	Leach	1311			180227	09/08/13 14:00	JAK	TAL EDI
TCLP	Analysis	8081A		1	180567	09/10/13 20:08	TSF	TAL EDI
TCLP	Prep	3510C			180476	09/10/13 08:13	HAW	TAL EDI
TCLP	Prep	8151A			180622	09/10/13 21:19	JMS	TAL EDI
TCLP	Analysis	8151A		1	180857	09/12/13 11:07	SAK	TAL EDI
TCLP	Leach	1311			180227	09/08/13 14:00	JAK	TAL EDI
TCLP	Leach	1311			180227	09/08/13 14:00	JAK	TAL EDI
TCLP	Prep	7470A			180657	09/11/13 06:20	TJS	TAL EDI
TCLP	Analysis	7470A		1	180749	09/11/13 11:37	TJS	TAL EDI
TCLP	Leach	1311			180227	09/08/13 14:00	JAK	TAL EDI
TCLP	Prep	3010A			180700	09/11/13 09:33	QZY	TAL EDI
TCLP	Analysis	6010B		5	181219	09/13/13 11:57	CDC	TAL EDI
Total/NA	Analysis	Moisture		1	180390	09/09/13 16:11	CJA	TAL EDI

Client Sample ID: B-6 3-6'

Lab Sample ID: 460-62522-2

Date Collected: 09/06/13 09:00
Matrix: Solid
Date Received: 09/06/13 15:21
Percent Solids: 84.2

Prep Type	Batch Type	Batch Method	Run	Dilution Factor	Batch Number	Prepared or Analyzed	Analyst	Lab
Total/NA	Prep	5035			180178	09/07/13 13:10	DAS	TAL EDI
Total/NA	Analysis	8260B		50	180624	09/11/13 03:51	KLB	TAL EDI
TCLP	Leach	1311			180159	09/07/13 11:05	GAT	TAL EDI
TCLP	Analysis	8260B		10	180649	09/11/13 18:33	SZD	TAL EDI
TCLP	Leach	1311			180227	09/08/13 14:00	JAK	TAL EDI
TCLP	Prep	3510C			180513	09/10/13 09:45	MDC	TAL EDI
TCLP	Analysis	8270C		1	181168	09/13/13 07:48	VJR	TAL EDI
Total/NA	Prep	5035			180194	09/07/13 15:01	DAS	TAL EDI
Total/NA	Analysis	8015B		50	180263	09/09/13 08:52	FAM	TAL EDI
Total/NA	Prep	3546			180368	09/09/13 13:43	FHW	TAL EDI
Total/NA	Analysis	8015B		1	180456	09/10/13 08:28	HJK	TAL EDI
TCLP	Leach	1311			180227	09/08/13 14:00	JAK	TAL EDI
TCLP	Prep	3510C			180476	09/10/13 08:13	HAW	TAL EDI
TCLP	Analysis	8081A		1	180567	09/10/13 19:52	TSF	TAL EDI

Lab Chronicle

Client: Schnabel Engineering
Project/Site: NAVFAC DLA

TestAmerica Job ID: 460-62522-1

Client Sample ID: B-6 3-6'

Lab Sample ID: 460-62522-2

Date Collected: 09/06/13 09:00
Matrix: Solid
Date Received: 09/06/13 15:21

Prep Type	Batch Type	Batch Method	Run	Dilution Factor	Batch Number	Prepared or Analyzed	Analyst	Lab
TCLP	Leach	1311			180227	09/08/13 14:00	JAK	TAL EDI
TCLP	Prep	8151A			180622	09/10/13 21:19	JMS	TAL EDI
TCLP	Analysis	8151A		1	180857	09/12/13 11:23	SAK	TAL EDI
TCLP	Leach	1311			180227	09/08/13 14:00	JAK	TAL EDI
TCLP	Prep	7470A			180657	09/11/13 06:20	TJS	TAL EDI
TCLP	Analysis	7470A		1	180749	09/11/13 11:40	TJS	TAL EDI
TCLP	Leach	1311			180227	09/08/13 14:00	JAK	TAL EDI
TCLP	Prep	3010A			180700	09/11/13 09:33	QZY	TAL EDI
TCLP	Analysis	6010B		5	181219	09/13/13 12:53	CDC	TAL EDI
Total/NA	Analysis	Moisture		1	180390	09/09/13 16:11	CJA	TAL EDI

Client Sample ID: B-8 0.5-3'

Lab Sample ID: 460-62522-3

Date Collected: 09/06/13 09:55
Matrix: Solid
Date Received: 09/06/13 15:21
Percent Solids: 87.9

Prep Type	Batch Type	Batch Method	Run	Dilution Factor	Batch Number	Prepared or Analyzed	Analyst	Lab
Total/NA	Prep	5035			180178	09/07/13 13:10	DAS	TAL EDI
Total/NA	Analysis	8260B		50	180624	09/11/13 04:14	KLB	TAL EDI
TCLP	Leach	1311			180159	09/07/13 11:05	GAT	TAL EDI
TCLP	Analysis	8260B		10	180649	09/11/13 18:58	SZD	TAL EDI
TCLP	Leach	1311			180227	09/08/13 14:00	JAK	TAL EDI
TCLP	Prep	3510C			180513	09/10/13 09:45	MDC	TAL EDI
TCLP	Analysis	8270C		1	181168	09/13/13 08:14	VJR	TAL EDI
Total/NA	Prep	5035			180194	09/07/13 15:01	DAS	TAL EDI
Total/NA	Analysis	8015B		50	180263	09/09/13 09:23	FAM	TAL EDI
Total/NA	Prep	3546			180368	09/09/13 13:43	FHW	TAL EDI
Total/NA	Analysis	8015B		1	180456	09/10/13 08:43	HJK	TAL EDI
TCLP	Leach	1311			180227	09/08/13 14:00	JAK	TAL EDI
TCLP	Prep	3510C			180476	09/10/13 08:13	HAW	TAL EDI
TCLP	Analysis	8081A		1	180567	09/10/13 19:36	TSF	TAL EDI
TCLP	Leach	1311			180227	09/08/13 14:00	JAK	TAL EDI
TCLP	Prep	8151A			180622	09/10/13 21:19	JMS	TAL EDI
TCLP	Analysis	8151A		1	180857	09/12/13 11:39	SAK	TAL EDI
TCLP	Leach	1311			180227	09/08/13 14:00	JAK	TAL EDI
TCLP	Prep	7470A			180657	09/11/13 06:20	TJS	TAL EDI
TCLP	Analysis	7470A		1	180749	09/11/13 11:41	TJS	TAL EDI
TCLP	Leach	1311			180227	09/08/13 14:00	JAK	TAL EDI
TCLP	Prep	3010A			180700	09/11/13 09:33	QZY	TAL EDI
TCLP	Analysis	6010B		5	181219	09/13/13 13:05	CDC	TAL EDI
Total/NA	Analysis	Moisture		1	180390	09/09/13 16:11	CJA	TAL EDI

Lab Chronicle

Client: Schnabel Engineering
Project/Site: NAVFAC DLA

TestAmerica Job ID: 460-62522-1

Client Sample ID: B-8 3-6'

Lab Sample ID: 460-62522-4

Date Collected: 09/06/13 10:05
Matrix: Solid
Date Received: 09/06/13 15:21

Prep Type	Batch Type	Batch Method	Run	Dilution Factor	Batch Number	Prepared or Analyzed	Analyst	Lab
TCLP	Leach	1311			180159	09/07/13 11:05	GAT	TAL EDI
TCLP	Analysis	8260B		10	180649	09/11/13 19:23	SZD	TAL EDI
Total/NA	Prep	5035			180178	09/07/13 13:11	DAS	TAL EDI
Total/NA	Analysis	8260B		50	180652	09/11/13 11:11	SZD	TAL EDI
TCLP	Leach	1311			180227	09/08/13 14:00	JAK	TAL EDI
TCLP	Prep	3510C			180513	09/10/13 09:45	MDC	TAL EDI
TCLP	Analysis	8270C		1	181381	09/14/13 15:13	VJR	TAL EDI
Total/NA	Prep	5035			180194	09/07/13 15:02	DAS	TAL EDI
Total/NA	Analysis	8015B		50	180263	09/09/13 09:53	FAM	TAL EDI
Total/NA	Prep	3546			180368	09/09/13 13:43	FHW	TAL EDI
Total/NA	Analysis	8015B		1	180456	09/10/13 08:58	HJK	TAL EDI
TCLP	Prep	3510C			180476	09/10/13 08:13	HAW	TAL EDI
TCLP	Analysis	8081A		1	180567	09/10/13 19:21	TSF	TAL EDI
TCLP	Leach	1311			180227	09/08/13 14:00	JAK	TAL EDI
TCLP	Leach	1311			180227	09/08/13 14:00	JAK	TAL EDI
TCLP	Prep	8151A			180622	09/10/13 21:19	JMS	TAL EDI
TCLP	Analysis	8151A		1	180857	09/12/13 11:55	SAK	TAL EDI
TCLP	Leach	1311			180227	09/08/13 14:00	JAK	TAL EDI
TCLP	Prep	7470A			180657	09/11/13 06:20	TJS	TAL EDI
TCLP	Analysis	7470A		1	180749	09/11/13 11:43	TJS	TAL EDI
TCLP	Leach	1311			180227	09/08/13 14:00	JAK	TAL EDI
TCLP	Prep	3010A			180700	09/11/13 09:33	QZY	TAL EDI
TCLP	Analysis	6010B		5	181219	09/13/13 13:09	CDC	TAL EDI
Total/NA	Analysis	Moisture		1	180390	09/09/13 16:11	CJA	TAL EDI

Client Sample ID: B-2 0.5-3'

Lab Sample ID: 460-62522-5

Date Collected: 09/06/13 09:20
Matrix: Solid
Date Received: 09/06/13 15:21
Percent Solids: 80.0

Prep Type	Batch Type	Batch Method	Run	Dilution Factor	Batch Number	Prepared or Analyzed	Analyst	Lab
Total/NA	Prep	5035			180178	09/07/13 13:12	DAS	TAL EDI
Total/NA	Analysis	8260B		50	180652	09/11/13 11:33	SZD	TAL EDI
TCLP	Leach	1311			180159	09/07/13 11:05	GAT	TAL EDI
TCLP	Analysis	8260B		10	180802	09/12/13 04:26	MZS	TAL EDI
TCLP	Leach	1311			180227	09/08/13 14:00	JAK	TAL EDI
TCLP	Prep	3510C			180513	09/10/13 09:45	MDC	TAL EDI
TCLP	Analysis	8270C		1	181381	09/14/13 15:38	VJR	TAL EDI
Total/NA	Prep	5035			180194	09/07/13 15:02	DAS	TAL EDI
Total/NA	Analysis	8015B		50	180263	09/09/13 10:23	FAM	TAL EDI
Total/NA	Prep	3546			180368	09/09/13 13:43	FHW	TAL EDI
Total/NA	Analysis	8015B		1	180456	09/10/13 09:12	HJK	TAL EDI
TCLP	Leach	1311			180227	09/08/13 14:00	JAK	TAL EDI
TCLP	Prep	3510C			180476	09/10/13 08:13	HAW	TAL EDI
TCLP	Analysis	8081A		1	180567	09/10/13 19:06	TSF	TAL EDI

Lab Chronicle

Client: Schnabel Engineering
Project/Site: NAVFAC DLA

TestAmerica Job ID: 460-62522-1

Client Sample ID: B-2 0.5-3'

Lab Sample ID: 460-62522-5

Date Collected: 09/06/13 09:20
Matrix: Solid
Date Received: 09/06/13 15:21

Prep Type	Batch Type	Batch Method	Run	Dilution Factor	Batch Number	Prepared or Analyzed	Analyst	Lab
TCLP	Leach	1311			180227	09/08/13 14:00	JAK	TAL EDI
TCLP	Prep	8151A			180622	09/10/13 21:19	JMS	TAL EDI
TCLP	Analysis	8151A		1	180920	09/12/13 12:42	SAK	TAL EDI
TCLP	Leach	1311			180227	09/08/13 14:00	JAK	TAL EDI
TCLP	Prep	7470A			180657	09/11/13 06:20	TJS	TAL EDI
TCLP	Analysis	7470A		1	180749	09/11/13 11:45	TJS	TAL EDI
TCLP	Leach	1311			180227	09/08/13 14:00	JAK	TAL EDI
TCLP	Prep	3010A			180700	09/11/13 09:33	QZY	TAL EDI
TCLP	Analysis	6010B		5	181219	09/13/13 13:13	CDC	TAL EDI
Total/NA	Analysis	Moisture		1	180390	09/09/13 16:11	CJA	TAL EDI

Client Sample ID: B-2 3-6'

Lab Sample ID: 460-62522-6

Date Collected: 09/06/13 09:40
Matrix: Solid
Date Received: 09/06/13 15:21
Percent Solids: 70.6

Prep Type	Batch Type	Batch Method	Run	Dilution Factor	Batch Number	Prepared or Analyzed	Analyst	Lab
Total/NA	Prep	5035			180178	09/07/13 13:12	DAS	TAL EDI
Total/NA	Analysis	8260B		50	180652	09/11/13 11:56	SZD	TAL EDI
TCLP	Leach	1311			180159	09/07/13 11:05	GAT	TAL EDI
TCLP	Analysis	8260B		10	180802	09/12/13 04:51	MZS	TAL EDI
TCLP	Leach	1311			180227	09/08/13 14:00	JAK	TAL EDI
TCLP	Prep	3510C			180513	09/10/13 09:45	MDC	TAL EDI
TCLP	Analysis	8270C		1	181381	09/14/13 16:04	VJR	TAL EDI
Total/NA	Prep	5035			180194	09/07/13 15:03	DAS	TAL EDI
Total/NA	Analysis	8015B		50	180263	09/09/13 10:54	FAM	TAL EDI
Total/NA	Prep	3546			180368	09/09/13 13:43	FHW	TAL EDI
Total/NA	Analysis	8015B		1	180456	09/10/13 10:02	HJK	TAL EDI
TCLP	Prep	3510C			180476	09/10/13 08:13	HAW	TAL EDI
TCLP	Analysis	8081A		1	180567	09/10/13 18:50	TSF	TAL EDI
TCLP	Leach	1311			180227	09/08/13 14:00	JAK	TAL EDI
TCLP	Leach	1311			180227	09/08/13 14:00	JAK	TAL EDI
TCLP	Prep	8151A			180622	09/10/13 21:19	JMS	TAL EDI
TCLP	Analysis	8151A		1	180920	09/12/13 12:58	SAK	TAL EDI
TCLP	Leach	1311			180227	09/08/13 14:00	JAK	TAL EDI
TCLP	Prep	7470A			180657	09/11/13 06:20	TJS	TAL EDI
TCLP	Analysis	7470A		1	180749	09/11/13 11:47	TJS	TAL EDI
TCLP	Leach	1311			180227	09/08/13 14:00	JAK	TAL EDI
TCLP	Prep	3010A			180700	09/11/13 09:33	QZY	TAL EDI
TCLP	Analysis	6010B		5	181219	09/13/13 13:16	CDC	TAL EDI
Total/NA	Analysis	Moisture		1	180390	09/09/13 16:11	CJA	TAL EDI

Lab Chronicle

Client: Schnabel Engineering
Project/Site: NAVFAC DLA

TestAmerica Job ID: 460-62522-1

Client Sample ID: B-11 0.5-3'

Lab Sample ID: 460-62522-7

Date Collected: 09/06/13 11:20
Matrix: Solid
Date Received: 09/06/13 15:21
Percent Solids: 84.2

Prep Type	Batch Type	Batch Method	Run	Dilution Factor	Batch Number	Prepared or Analyzed	Analyst	Lab
Total/NA	Prep	5035			180178	09/07/13 13:13	DAS	TAL EDI
Total/NA	Analysis	8260B		50	180624	09/11/13 05:46	KLB	TAL EDI
TCLP	Leach	1311			180159	09/07/13 11:05	GAT	TAL EDI
TCLP	Analysis	8260B		10	180802	09/12/13 05:16	MZS	TAL EDI
TCLP	Leach	1311			180227	09/08/13 14:00	JAK	TAL EDI
TCLP	Prep	3510C			180513	09/10/13 09:45	MDC	TAL EDI
TCLP	Analysis	8270C		1	181381	09/14/13 17:20	VJR	TAL EDI
Total/NA	Prep	5035			180194	09/07/13 15:03	DAS	TAL EDI
Total/NA	Analysis	8015B		50	180263	09/09/13 11:25	FAM	TAL EDI
Total/NA	Prep	3546			180368	09/09/13 13:43	FHW	TAL EDI
Total/NA	Analysis	8015B		1	180456	09/10/13 10:17	HJK	TAL EDI
TCLP	Leach	1311			180227	09/08/13 14:00	JAK	TAL EDI
TCLP	Prep	3510C			180476	09/10/13 08:13	HAW	TAL EDI
TCLP	Analysis	8081A		1	180567	09/10/13 18:35	TSF	TAL EDI
TCLP	Prep	8151A			180622	09/10/13 21:19	JMS	TAL EDI
TCLP	Leach	1311			180227	09/08/13 14:00	JAK	TAL EDI
TCLP	Analysis	8151A		1	180920	09/12/13 13:13	SAK	TAL EDI
TCLP	Leach	1311			180227	09/08/13 14:00	JAK	TAL EDI
TCLP	Prep	7470A			180657	09/11/13 06:20	TJS	TAL EDI
TCLP	Analysis	7470A		1	180749	09/11/13 11:11	TJS	TAL EDI
TCLP	Leach	1311			180227	09/08/13 14:00	JAK	TAL EDI
TCLP	Prep	3010A			180700	09/11/13 09:33	QZY	TAL EDI
TCLP	Analysis	6010B		5	181219	09/13/13 13:20	CDC	TAL EDI
Total/NA	Analysis	Moisture		1	180390	09/09/13 16:11	CJA	TAL EDI

Client Sample ID: B-11 3-6'

Lab Sample ID: 460-62522-8

Date Collected: 09/06/13 11:30
Matrix: Solid
Date Received: 09/06/13 15:21
Percent Solids: 87.7

Prep Type	Batch Type	Batch Method	Run	Dilution Factor	Batch Number	Prepared or Analyzed	Analyst	Lab
Total/NA	Prep	5035			180178	09/07/13 13:13	DAS	TAL EDI
Total/NA	Analysis	8260B		50	180624	09/11/13 06:09	KLB	TAL EDI
TCLP	Leach	1311			180159	09/07/13 11:05	GAT	TAL EDI
TCLP	Analysis	8260B		10	180649	09/11/13 17:42	SZD	TAL EDI
TCLP	Leach	1311			180227	09/08/13 14:00	JAK	TAL EDI
TCLP	Prep	3510C			180513	09/10/13 09:45	MDC	TAL EDI
TCLP	Analysis	8270C		1	182009	09/17/13 21:57	MMC	TAL EDI
Total/NA	Prep	5035			180194	09/07/13 15:04	DAS	TAL EDI
Total/NA	Analysis	8015B		50	180263	09/09/13 11:55	FAM	TAL EDI
Total/NA	Prep	3546			180368	09/09/13 13:43	FHW	TAL EDI
Total/NA	Analysis	8015B		1	180456	09/10/13 10:31	HJK	TAL EDI
TCLP	Leach	1311			180227	09/08/13 14:00	JAK	TAL EDI
TCLP	Prep	3510C			180476	09/10/13 08:13	HAW	TAL EDI
TCLP	Analysis	8081A		1	180567	09/10/13 18:20	TSF	TAL EDI

Lab Chronicle

Client: Schnabel Engineering
Project/Site: NAVFAC DLA

TestAmerica Job ID: 460-62522-1

Client Sample ID: B-11 3-6'

Lab Sample ID: 460-62522-8

Date Collected: 09/06/13 11:30
Matrix: Solid
Date Received: 09/06/13 15:21

Prep Type	Batch Type	Batch Method	Run	Dilution Factor	Batch Number	Prepared or Analyzed	Analyst	Lab
TCLP	Prep	8151A			180622	09/10/13 21:19	JMS	TAL EDI
TCLP	Analysis	8151A		1	180920	09/12/13 13:29	SAK	TAL EDI
TCLP	Leach	1311			180227	09/08/13 14:00	JAK	TAL EDI
TCLP	Leach	1311			180227	09/08/13 14:00	JAK	TAL EDI
TCLP	Prep	7470A			180657	09/11/13 06:20	TJS	TAL EDI
TCLP	Analysis	7470A		1	180749	09/11/13 11:52	TJS	TAL EDI
TCLP	Leach	1311			180227	09/08/13 14:00	JAK	TAL EDI
TCLP	Prep	3010A			180700	09/11/13 09:33	QZY	TAL EDI
TCLP	Analysis	6010B		5	181219	09/13/13 13:24	CDC	TAL EDI
Total/NA	Analysis	Moisture		1	180390	09/09/13 16:11	CJA	TAL EDI

Laboratory References:

TAL EDI = TestAmerica Edison, 777 New Durham Road, Edison, NJ 08817, TEL (732)549-3900

Certification Summary

Client: Schnabel Engineering
Project/Site: NAVFAC DLA

TestAmerica Job ID: 460-62522-1

Laboratory: TestAmerica Edison

All certifications held by this laboratory are listed. Not all certifications are applicable to this report.

Authority	Program	EPA Region	Certification ID	Expiration Date
Connecticut	State Program	1	PH-0200	09-30-13
DE Haz. Subst. Cleanup Act (HSCA)	State Program	3	N/A	04-30-14
New Jersey	NELAP	2	12028	06-30-14
New York	NELAP	2	11452	04-01-14
Pennsylvania	NELAP	3	68-00522	02-28-14
Rhode Island	State Program	1	LAO00132	12-30-13
USDA	Federal		NJCA-003-08	03-11-14

Method Summary

Client: Schnabel Engineering
Project/Site: NAVFAC DLA

TestAmerica Job ID: 460-62522-1

Method	Method Description	Protocol	Laboratory
8260B	Volatile Organic Compounds (GC/MS)	SW846	TAL EDI
8270C	Semivolatile Organic Compounds (GC/MS)	SW846	TAL EDI
8015B	Gasoline Range Organics - (GC)	SW846	TAL EDI
8015B	Diesel Range Organics (DRO) (GC)	SW846	TAL EDI
8081A	Organochlorine Pesticides (GC)	SW846	TAL EDI
8151A	Herbicides (GC)	SW846	TAL EDI
6010B	Metals (ICP)	SW846	TAL EDI
7470A	Mercury (CVAA)	SW846	TAL EDI
Moisture	Percent Moisture	EPA	TAL EDI

Protocol References:

EPA = US Environmental Protection Agency

SW846 = "Test Methods For Evaluating Solid Waste, Physical/Chemical Methods", Third Edition, November 1986 And Its Updates.

Laboratory References:

TAL EDI = TestAmerica Edison, 777 New Durham Road, Edison, NJ 08817, TEL (732)549-3900

Sample Summary

Client: Schnabel Engineering
Project/Site: NAVFAC DLA

TestAmerica Job ID: 460-62522-1

Lab Sample ID	Client Sample ID	Matrix	Collected	Received
460-62522-1	B-6 0.5-3'	Solid	09/06/13 08:50	09/06/13 15:21
460-62522-2	B-6 3-6'	Solid	09/06/13 09:00	09/06/13 15:21
460-62522-3	B-8 0.5-3'	Solid	09/06/13 09:55	09/06/13 15:21
460-62522-4	B-8 3-6'	Solid	09/06/13 10:05	09/06/13 15:21
460-62522-5	B-2 0.5-3'	Solid	09/06/13 09:20	09/06/13 15:21
460-62522-6	B-2 3-6'	Solid	09/06/13 09:40	09/06/13 15:21
460-62522-7	B-11 0.5-3'	Solid	09/06/13 11:20	09/06/13 15:21
460-62522-8	B-11 3-6'	Solid	09/06/13 11:30	09/06/13 15:21

TestAmerica

THE LEADER IN ENVIRONMENTAL TESTING

460-62522 Chain of Custody

777 New Durham Road
Edison, New Jersey 08817
Phone: (732) 549-3900 Fax: (732) 549-3679

CHAIN OF CUSTODY

5.5

Page ____ of ____

Name (for report and invoice) William Bradfield	Samplers Name (Printed) Luke Geake / Johanna Mikitka	Site/Project Identification NAVFAC DLA
Company Schnabel Engineering Consultants Inc	P. O. #	State (Location of site): NJ: ☐ NY: ☐ Other: PA
		Regulatory Program:
Address 1380 Wilmington Pike, Suite 100	Analysis Turnaround Time	
City West Chester State PA 19382	Standard ☒	
Phone 610-696-6066 Fax 610-696-7771	Rush Chragos Authorized For: 2 Week ☐ 1 Week ☐ Other ☐	

ANALYSIS REQUESTED (ENTER "X" BELOW TO INDICATE REQUEST)

LAB USE ONLY
Project No:
Job No:

Sample Identification	Date	Time	Matrix	No. of. Cont.	Full TCLP	BTEX	DRO / GRO	Sample Numbers
B-6 0.5-3'	9-6-13	850	Soil	4	X	X	X	460-62522
B-6 3-6'		900						
B-8 0.5-3'		955						
B-8 3-6'		1005						
B-2 0.5-3'		920						
B-2 3-6'		940						
B-11 0.5-3'		1120						
B-11 3-6'		1130						

SHORT HOLD

Preservation Used: 1 = ICE, 2 = HCl, 3 = H_2SO_4, 4 = HNO_3, 5 = NaOH
6 = Other _____, 7 = Other _____

Soil:
Water:

Special Instructions Dates & times collected from jars JG 9-6-13

Water Metals Filtered (Yes/No)? _____

Relinquished by	Company	Date / Time	Received by	Company
1) Luke Geake	Schnabel Eng.	9/6/13 1521	1)	TA-KOP
2) Jeffrey S. Kerr	TA	9/6/13 1633	2)	TA-KOP
3)	TA-KOP	9/6/13 1930	3)	TA
4)	TA	9/6/13 2055	4)	TA 9/6/13 2055

Laboratory Certifications: New Jersey (12028), New York (11452), Pennsylvania (68-522), Connecticut (PH-0200), Rhode Island (132).

TAL - 0016 (0408)

Massachusetts (M-NJ312), North Carolina (No. 578)

TestAmerica Edison Receipt Temperature and pH Log

Job Number: 62522

Number of Coolers: _____ IR Gun # _____

Temp. Cooler #1 (Deg C) (Raw/Corrected) 5.5 | Temp. Cooler #4 (Deg C) (Raw/Corrected) _____ | Temp. Cooler #7 (Deg C) (Raw/Corrected) _____

Temp. Cooler #2 (Deg C) (Raw/Corrected) _____ | Temp. Cooler #5 (Deg C) (Raw/Corrected) _____ | Temp. Cooler #8 (Deg C) (Raw/Corrected) _____

Temp. Cooler #3 (Deg C) (Raw/Corrected) _____ | Temp. Cooler #6 (Deg C) (Raw/Corrected) _____ | Temp. Cooler #9 (Deg C) (Raw/Corrected) _____

Sample No.	Ammonia (pH<2)	COD (pH<2)	Nitrate Nitrite (pH<2)	*Metals (pH<2)	Pest (pH 5-9)	PHC (pH<2)	Phenols (pH<2)	Sulfide (pH>9)	TKN (pH<2)	TOC (pH<2)	Total Cyanide (pH>12)	Total Phos (pH<2)	Other

If pH adjustments are required record the information below:

Sample No(s). adjusted: _____

Preservative Name/Conc.: _____ Volume of Preservative used (ml): _____

Lot # of Preservative: _____ Expiration Date: _____

Project Manager and the Department Manager should be notified about the samples which were pH adjusted.

** Samples for Metal analysis which are out of compliance must be acidified at least 24 hours prior to analysis.*

Initials: JK Date: 9/6/13

EDS-WI-038, Rev 3.

Login Sample Receipt Checklist

Client: Schnabel Engineering

Job Number: 460-62522-1

Login Number: 62522

List Source: TestAmerica Edison

List Number: 1

Creator: Gilmore, Julie L

Question	Answer	Comment
Radioactivity wasn't checked or is </= background as measured by a survey meter.	N/A	
The cooler's custody seal, if present, is intact.	True	
Sample custody seals, if present, are intact.	True	
The cooler or samples do not appear to have been compromised or tampered with.	True	
Samples were received on ice.	True	
Cooler Temperature is acceptable.	True	
Cooler Temperature is recorded.	True	
COC is present.	True	
COC is filled out in ink and legible.	True	
COC is filled out with all pertinent information.	True	
Is the Field Sampler's name present on COC?	True	
There are no discrepancies between the containers received and the COC.	True	
Samples are received within Holding Time.	True	
Sample containers have legible labels.	True	
Containers are not broken or leaking.	True	
Sample collection date/times are provided.	True	
Appropriate sample containers are used.	True	
Sample bottles are completely filled.	True	
Sample Preservation Verified.	True	
There is sufficient vol. for all requested analyses, incl. any requested MS/MSDs	True	
Containers requiring zero headspace have no headspace or bubble is <6mm (1/4").	True	
Multiphasic samples are not present.	True	
Samples do not require splitting or compositing.	True	
Residual Chlorine Checked.	N/A	

Microbac Laboratories, Inc.

Baltimore Division

2101 Van Deman Street • Baltimore, MD 21224

Phone: 410-633-1800
Fax: 410-633-6553
www.microbac.com

COVER LETTER

Luke Geake
Schnabel Engineering
1380 Wilmington Pike, Suite 100
West Chester, PA 19382

October 09, 2013
Report No.: 13I1226

RE: Soil Analysis-MD

The report of analyses contains test results for samples received at Microbac Laboratories, Inc., Baltimore Division on 09/18/2013 09:00.

The enclosed results were obtained from and applicable to the sample(s) as received at the laboratory. All sample results are reported on an "as received" basis unless otherwise noted.

All data included in this report has been reviewed and meet the applicable project and certification specific requirements, unless otherwise noted.

This report has been paginated in its entirety and shall not be reproduced except in full, without the written approval of Microbac Laboratories, Inc.

We appreciate the opportunity to service your analytical needs. If you have any questions, please feel free to contact us.

This Data Package contains the following:

- This Cover Page
- Sample Summary
- Test Results
- Certifications/Notes and Definitions
- Cooler Receipt Log
- Chain of Custody

10/9/2013

Final report reviewed by: Mark B. Horan/Laboratory Director Report issue date

All samples received in proper condition and results conform to ISO 17025 and TNI NELAC standards unless otherwise noted.

If we have not met or exceeded your expectations, please contact Mark Horan, Managing Director, at 410-633-1800 You may also contact Sean Hyde, Chief Operating Officer at sean.hyde@microbac.com or James Nokes, President james.nokes@microbac.com

Microbac Laboratories, Inc.

Baltimore Division

2101 Van Deman Street • Baltimore, MD 21224

Phone: 410-633-1800
Fax: 410-633-6553
www.microbac.com

CERTIFICATE OF ANALYSIS

Schnabel Engineering 1380 Wilmington Pike, Suite 100 West Chester, PA 19382	Project: Soil Analysis-MD Project Number: NAVFAC-NSA Project Manager: Luke Geake	Report: 13I1226 Reported: 10/09/2013 09:59

SAMPLE SUMMARY

Sample ID	Laboratory ID	Matrix	Type	Date Sampled	Date Received
B-5, 2-4'	13I1226-01	Soil	Not Specified	09/06/2013 00:00	09/18/2013 09:00
B-8, 2-4'	13I1226-02	Soil	Not Specified	09/06/2013 00:00	09/18/2013 09:00

Microbac Laboratories, Inc.

Baltimore Division

2101 Van Deman Street • Baltimore, MD 21224

Phone: 410-633-1800
Fax: 410-633-6553
www.microbac.com

CERTIFICATE OF ANALYSIS

Schnabel Engineering 1380 Wilmington Pike, Suite 100 West Chester, PA 19382	Project: Soil Analysis-MD Project Number: NAVFAC-NSA Project Manager: Luke Geake	Report: 13I1226 Reported: 10/09/2013 09:59

B-5, 2-4'

13I1226-01 (Soil) Sampled: 09/06/2013 00:00; Type: Not Specified

Microbac Laboratories, Inc., Baltimore Division

Wet Chemistry

Analyte	Result	Reporting Limit	Units	Prepared	Analyzed	Analyst	Method	Notes
% Solids	**84.25**	0.05	% by Weight	092013 1438	092313 1210	LCR	SM (20) 2540G	
Chloride	ND	23	mg/kg dry	092313 0805	092313 1400	VAS	SM(20)4500Cl-C(M)	D
Sulfate as SO4	**19000**	1500	mg/kg dry	093013 1051	093013 1501	LCR	ASTM D516-02(M)	M5, D

Microbac Laboratories, Inc., Baltimore Division

The results in this report apply to the samples analyzed in accordance with the chain of custody document. This analytical report must be reproduced in its entirety.

Mark B. Horan, Laboratory Director

Original Lab Report

Microbac Laboratories, Inc.

Baltimore Division

2101 Van Deman Street • Baltimore, MD 21224

Phone: 410-633-1800
Fax: 410-633-6553
www.microbac.com

CERTIFICATE OF ANALYSIS

Schnabel Engineering	Project: Soil Analysis-MD	Report: 13I1226
1380 Wilmington Pike, Suite 100	Project Number: NAVFAC-NSA	Reported: 10/09/2013 09:59
West Chester, PA 19382	Project Manager: Luke Geake	

B-8, 2-4'

13I1226-02 (Soil) Sampled: 09/06/2013 00:00; Type: Not Specified

Microbac Laboratories, Inc., Baltimore Division

Wet Chemistry

Analyte	Result	Reporting Limit	Units	Prepared	Analyzed	Analyst	Method	Notes
% Solids	**88.06**	0.05	% by Weight	092013 1438	092313 1210	LCR	SM (20) 2540G	
Chloride	ND	25	mg/kg dry	092313 0805	092313 1400	VAS	SM(20)4500Cl-C(M)	D
Sulfate as SO4	**4500**	220	mg/kg dry	093013 1051	093013 1501	LCR	ASTM D516-02(M)	D

Microbac Laboratories, Inc.

Baltimore Division

2101 Van Deman Street • Baltimore, MD 21224

Phone: 410-633-1800
Fax: 410-633-6553
www.microbac.com

CERTIFICATE OF ANALYSIS

Schnabel Engineering 1380 Wilmington Pike, Suite 100 West Chester, PA 19382	Project: Soil Analysis-MD Project Number: NAVFAC-NSA Project Manager: Luke Geake	Report: 13I1226 Reported: 10/09/2013 09:59

Project Requested Certification(s):

A2LA (Environmental)

Analyte Certification Exception Summary

Microbac Laboratories, Inc., Baltimore Division
Matrix: Solid

ASTM D516-02(M)
Sulfate as SO4: No Certification

SM (20) 2540G
% Solids: No Certification

All analysis performed were analyzed under the required certification unless otherwise noted in the above summary.

Certification List

Below is a list of certifications maintained by Microbac Laboratories, Inc. All data included in this report has been reviewed for and meets all project specific and quality control requirements of the applicable accreditation, unless otherwise noted. A complete list of individual analytes pursuant to each certification below is available upon request.

Code	Description	Certification Number	Expires
Microbac Laboratories, Inc., Baltimore Division			
A2LA1	A2LA (Biology)	410.02	04/30/2015
A2LA2	A2LA (Environmental)	410.01	04/30/2015
CPSC	CPSC Testing of Childrens Products and Jewelry	1115	08/30/2013
Pb	Environmental Lead (ELLAP)	410.01	04/30/2015
MD	State of Maryland (Drinking Water)	109	06/30/2014
Microbac Laboratories, Inc., Richmond Division			
VA-R	Commonwealth of Virginia (NELAC) - Richmond	460022-2348	06/14/2014

Microbac Laboratories, Inc., Baltimore Division

The results in this report apply to the samples analyzed in accordance with the chain of custody document. This analytical report must be reproduced in its entirety.

Mark B. Horan, Laboratory Director

Original Lab Report

Microbac Laboratories, Inc.

Baltimore Division

2101 Van Deman Street • Baltimore, MD 21224

Phone: 410-633-1800
Fax: 410-633-6553
www.microbac.com

CERTIFICATE OF ANALYSIS

Schnabel Engineering 1380 Wilmington Pike, Suite 100 West Chester, PA 19382	Project: Soil Analysis-MD Project Number: NAVFAC-NSA Project Manager: Luke Geake	Report: 13I1226 Reported: 10/09/2013 09:59

Qualifiers/Notes and Definitions

General Definitions:

DET	Analyte DETECTED
ND	Analyte NOT DETECTED at or above the reporting limit
dry	Sample results reported on a dry weight basis
RPD	Relative Percent Difference

Analysis Qualifiers/Notes:

Microbac Laboratories, Inc., Baltimore Division

M5	The matrix spike recovery was biased low, the reported result is estimated.
D	Sample Diluted

Microbac Laboratories, Inc.

Baltimore Division

2101 Van Deman Street • Baltimore, MD 21224

Phone: 410-633-1800
Fax: 410-633-6553
www.microbac.com

Cooler Receipt Log

Cooler ID: Default Cooler **Cooler Temp:** 19.80 °C **Work Order:** 13I1226

Custody Seals Intact:	Yes	COC/Containers Agree:	Yes
Containers Intact:	Yes	Correct Preservation:	Yes
Received On Ice:	Yes	Correct Number of Containers Received:	Yes
Radiation Scan Acceptable:	Yes	Sufficient Sample Volume for Testing:	Yes
COC Present:	Yes	Samples Received in Proper Condition:	Yes

Comments:

Schnabel ENGINEERING

CHAIN OF CUSTODY

1380 Wilmington Pike, Suite 100
West Chester, Pennsylvania 19382
610-696-6066 Phone
610-696-7771 Fax

Project Number: 13615018.00

Schnabel Engineering
1380 Wilmington Pike, Suite 100
West Chester, PA 19382

Contact: Luke Geake
E-mail: lgeake@schnabel-eng.com
Phone Number: 610-696-6066
Fax Number: 610-696-7771

Project Name: NAVFAC - NSA
Project Number: 13615018.00
Project Location:

Sample Type: 1. Soil 2. Geosynthetic 3. Rock 4. Concrete 5. Other

Container Type: 1. Bucket 2. Bag 3. Jar 4. Tube 5. Roll

Analysis

Sample Identification	Container Size	Container Type	Sampling Date	Sampling Time	Sample Type	Chlorides + Sulfates						
B-5, 2-4'	1QT	2	9/6/13		1	X						
B-8, 2-4'	1QT	2	9/6/13		1	X						

13I1226

Relinquished By: Luke Geake	Date: 9/18/13 Time:	**Received By:** Fed Ex	Date: Time:
Relinquished By:	Date: Time:	**Received By:**	Date: Time:
Relinquished By: Fed Ex	Date: Time:	**Received By:**	Date: 09/18/13 Time: 0900

Turn Around Time Requested:
No. of Business Days:
ASAP

Special Instructions:
19.8°C Rcvd on ice
Rcvd scan neg 09/18/13 0902

SHIPPED VIA: FedEx