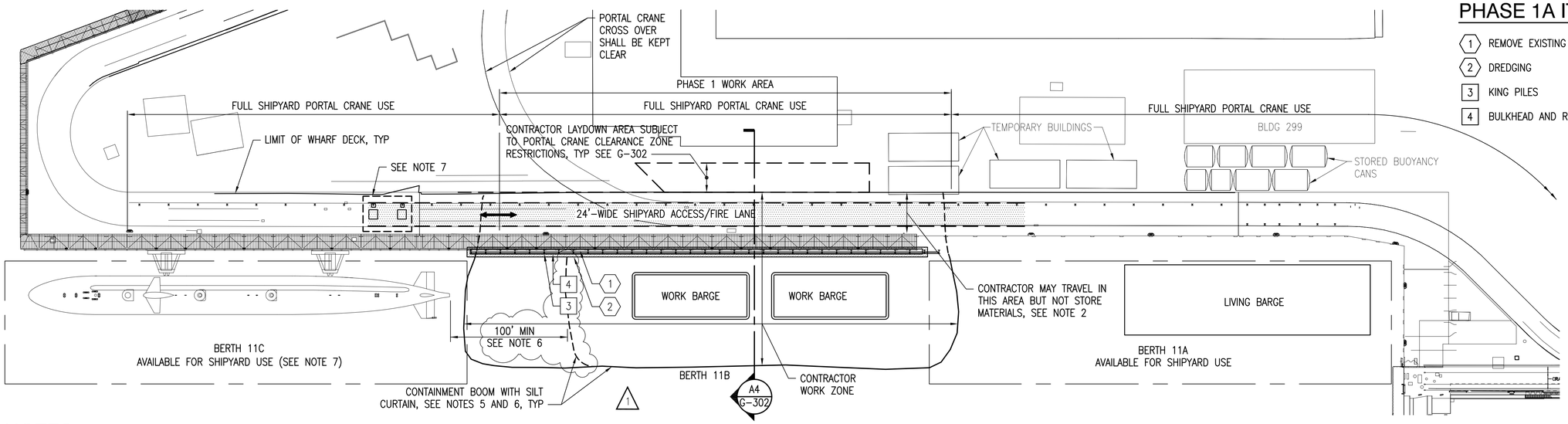

PHASE 1A ITEMS

1. REMOVE EXISTING TIMBER RUB STRIPS AND CHOCKS
2. DREDGING
3. KING PILES
4. BULKHEAD AND ROCK ANCHORS

NOTES:

1. A 24 FOOT WIDE FIRE LANE THRU THE WORK ZONE SHALL BE MAINTAINED AT ALL TIMES DURING CONSTRUCTION. THE CONTRACTOR SHALL NOT STORE ANY MATERIAL IN THIS AREA. THE FIRE LANE SHALL BE CLEARLY MARKED AT ALL TIMES. SEE SHEET G-106 FOR TEMPORARY SIGNAGE REQUIREMENTS.
2. IN AREAS DESIGNATED AS FULL SHIPYARD PORTAL CRANE USE, THE CONTRACTOR MAY TRAVEL ACROSS THIS AREA BUT CANNOT STORE MATERIAL WITHIN THIS AREA.
3. IN AREAS DESIGNATED AS LIMITED PORTAL CRANE TRAVEL AREA, THE CONTRACTOR MAY EXECUTE THE WORK IN THESE AREAS. HOWEVER, THE CONTRACTOR WILL BE REQUIRED TO ACCOMMODATE PERIODIC CRANE TRAVEL THRU THE WORK ZONE. SEE SHEET G-105 AND THE CONTRACT SPECIFICATIONS FOR ADDITIONAL INFORMATION.
4. THE CONTRACTOR SHALL PROVIDE A STABLE SLOPE IN THE BACKFILL UNDER THE DECK AT THE INTERFACE BETWEEN PHASES. THE CAST IN PLACE CAP AND THE TENSIONING OF THE ROCK ANCHORS IN THIS AREA WILL NEED TO BE SEQUENCED ACCORDINGLY AND SHALL BE COMPLETED IN THE SUBSEQUENT PHASE.
5. FOR SILT AND TURBIDITY CURTAIN PLAN AND NOTES SEE SHEET C-101.
6. CONTRACTOR WILL NOT BE PERMITTED TO WORK WITHIN 100 FEET OF A BERTHED SUBMARINE. THE CONTRACTOR'S SCHEDULE SHALL BE COORDINATED WITH THE DOCKING SCHEDULE. THIS INCLUDES MAINTAINING THE CONTAINMENT BOOM AND SILT CURTAIN 100' CLEAR OF BERTHED SUBMARINE.
7. SUPPORT PILE INSTALLATION AND DECK AND PILE JACKET REPAIRS AT BERTH 11C SHALL BE PERFORMED DURING PHASES 1 AND 2 WHEN BERTH 11C IS AVAILABLE AND AS APPROVED BY THE CONTRACTING OFFICER. SEE G-105 FOR ADDITIONAL REQUIREMENTS.
8. SUPPORT PILES WITHIN THE CRANE TEST AREA IN BERTH 11A MUST BE COMPLETED IN PHASE 1B
9. SUPPORT PILES OUTSIDE OF THE CRANE TEST AREA AND DECK AND PILE JACKET REPAIRS AT BERTH 11A CAN BE PERFORMED DURING PHASE 1 IF THE BERTH IS AVAILABLE AND IF APPROVED BY THE CONTRACTING OFFICER. SEE G-105 FOR ADDITIONAL REQUIRMENTS.
10. FIRE LANE SHALL BE ROUTED AROUND THE TEMP BUILDINGS AND BLDG 299 WHEN WORK ZONE IS ESTABLISHED FOR WHARF DECK WORK AT THE EAST END OF BERTH 11B AND CRANE TEST AREA IN BERTH 11A.

PHASING PLAN - PHASE 1A

SCALE: 1" = 50'

PLAN NORTH

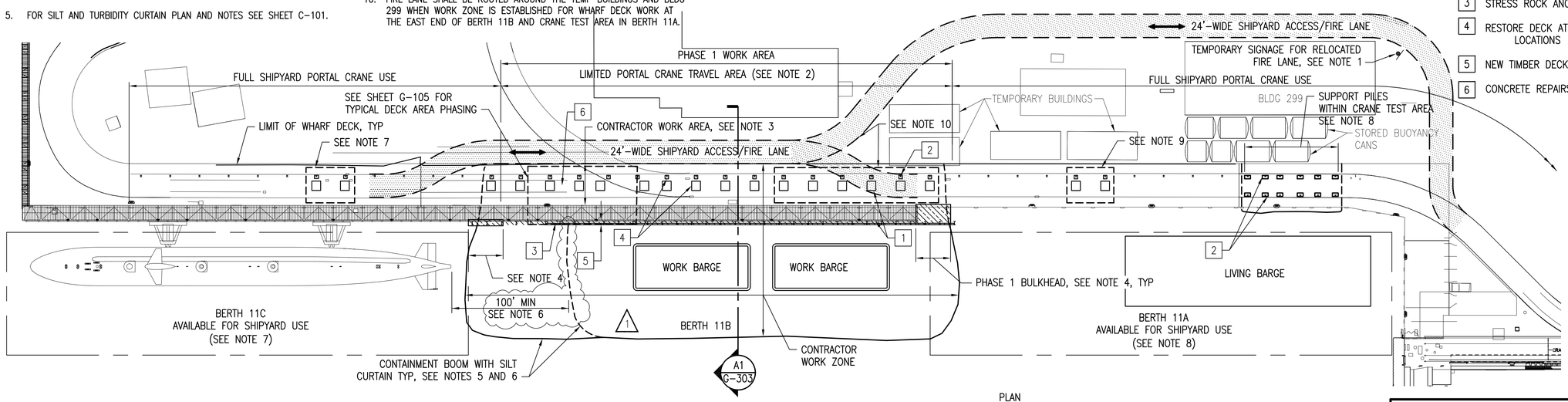

PHASE 1B ITEMS

1. BACKFILL
2. INSTALL SUPPORT PILES
3. STRESS ROCK ANCHORS
4. RESTORE DECK AT FILL ACCESS AND SUPPORT PILE LOCATIONS
5. NEW TIMBER DECK
6. CONCRETE REPAIRS

PHASING PLAN - PHASE 1B

SCALE: 1" = 50'

PLAN NORTH

GRAPHIC SCALE

1"=50' 50' 0 50' 100'

CHECK GRAPHIC SCALE BEFORE USING

SYM	DESCRIPTION	DATE	APPR
1	ADDENDA	7/27/16	DWH

NAVFAC

STATE OF MAINE PAUL F. HARRINGTON 13061 LICENSED PROFESSIONAL ENGINEER 3-7-16 SEAL

MNFST A JOINT VENTURE A/E INFO

APPROVED

FOR COMMANDER NAVFAC

ACTIVITY: PER DOCUMENT FROM PNSY CODE 980, KITTERY ME

SATISFACTORY TO DATE: 05/09/16

DES: DWH | DRW: CHG | CHK: DWH

PM/DM: NATHAN LIBBY

BRANCH MANAGER: NATHAN MAHER

FEAD/PM&E: AMIN BAHROUR

FIRE PROTECTION: N/A

DEPARTMENT OF THE NAVY
NAVAL FACILITIES ENGINEERING COMMAND
PUBLIC WORKS DEPARTMENT – MAINE
PORTSMOUTH NAVAL SHIPYARD

NAVAL FACILITIES ENGINEERING COMMAND ~ MID-ATLANTIC
NAVAL SHIPYARD ~ PORTSMOUTH, NH
KITTERY, MAINE

STRUCTURAL REPAIRS AT BERTHS 11A, 11B AND 11C

PHASING PLAN – PHASE 1

EPROJECT NO.: 1356489

CONSTR. CONTR. NO. N40085-XX-C-XXXX

NAVFAC DRAWING NO. 12716004

SHEET 8 OF 144

G-102 | FP2-16-644

DRAWFORM REVISION: 10 OCTOBER 2014

FILE NAME: S:\1794\Active\179410203\\TP-104A PNSY Lifting Study\TP-104A PNSY Lifting Study\02 CADD\01 General\FP2-16-644.dwg LAYOUT NAME: PHASING PLAN – PHASE 1 PLOTTED: Wednesday, July 27, 2016 – 7:26pm USER: cgoodridge

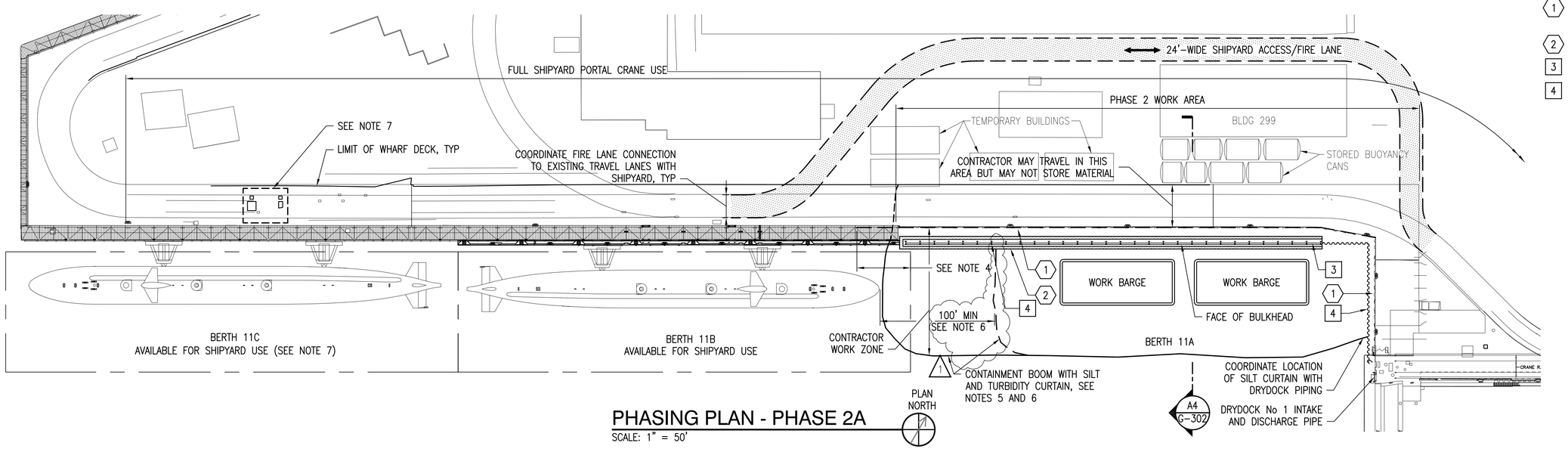

PHASE 2A ITEMS

1. DEMOLISH EXISTING FENDER SYSTEM
2. DREDGING
3. KINGPILES
4. BULKHEAD AND ROCK ANCHORS

PHASING PLAN - PHASE 2A

SCALE: 1" = 50'

NOTE:

1. FOR NOTES SEE SHEET G-102.

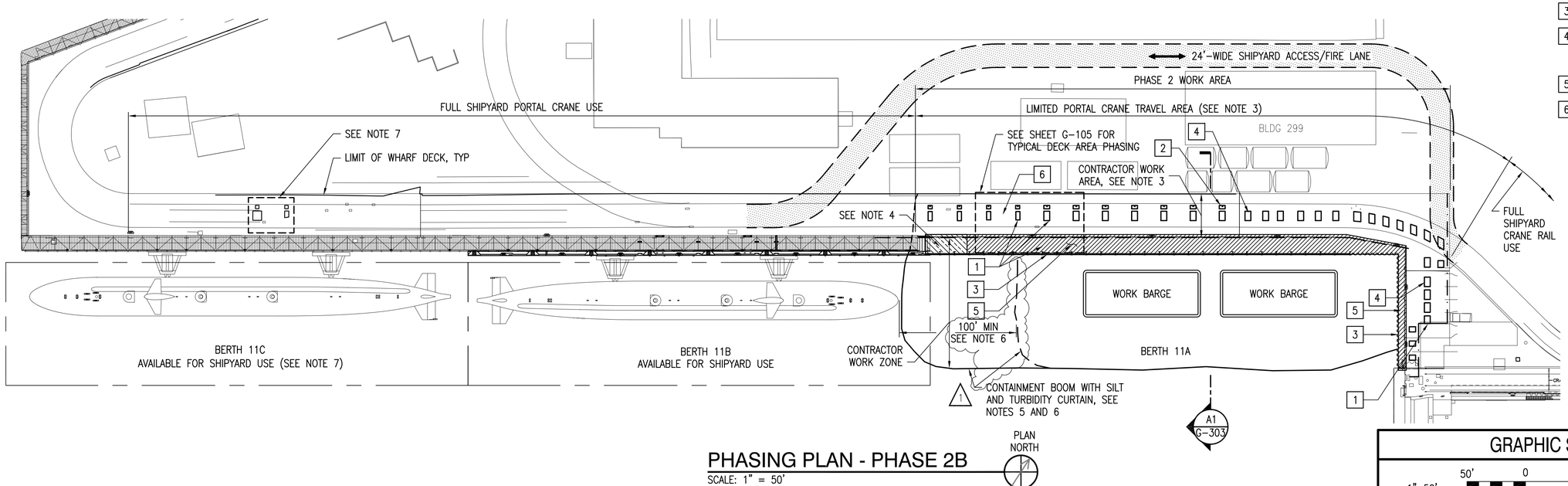

PHASE 2B ITEMS

1. BACKFILL
2. INSTALL SUPPORT PILES
3. STRESS ROCK ANCHORS
4. RESTORE DECK AT FILL ACCESS AND SUPPORT PILE LOCATIONS
5. NEW TIMBER DECK
6. CONCRETE REPAIRS

PHASING PLAN - PHASE 2B

SCALE: 1" = 50'

GRAPHIC SCALE

1"=50' 50' 0 50' 100'

CHECK GRAPHIC SCALE BEFORE USING

SYM	DESCRIPTION	DATE	APPR
1	ADDENDA	7/27/16	DWH

NAVFAC

STATE OF MAINE — PAUL F. HARRINGTON 13061 — LICENSED PROFESSIONAL ENGINEER — 7-27-16 — SEAL

MN FST A JOINT VENTURE — A/E INFO

APPROVED

FOR COMMANDER NAVFAC

ACTIVITY: PER DOCUMENT FROM PNSY CODE 980, KITTERY ME

SATISFACTORY TO DATE: 05/09/16

DES DWH | DRW CHG | CHK DWH

PM/DM: NATHAN LIBBY

BRANCH MANAGER: NATHAN MAHER

FEAD/PM&E: AMN BAHROUR

FIRE PROTECTION: N/A

DEPARTMENT OF THE NAVY
NAVAL FACILITIES ENGINEERING COMMAND
PUBLIC WORKS DEPARTMENT – MAINE
PORTSMOUTH NAVAL SHIPYARD

NAVAL FACILITIES ENGINEERING COMMAND ~ MID-ATLANTIC
NAVAL SHIPYARD – PORTSMOUTH, NH
KITTERY, MAINE

STRUCTURAL REPAIRS AT BERTHS 11A, 11B AND 11C

PHASING PLAN – PHASE 2

EPROJECT NO.: 1356489

CONSTR. CONTR. NO. N40085-XX-C-XXXX

NAVFAC DRAWING NO. 12716005

SHEET 9 OF 144

G-103 | FP2-16-645

DRAWFORM REVISION: 10 OCTOBER 2014

FILE NAME: S:\1794\Active\179410203\TP-104A PNSY Lifting Study\02 CADD\01 General\FP2-16-645.dwg LAYOUT NAME: PHASING PLAN – PHASE 2 PLOTTED: Wednesday, July 27, 2016 – 7:27pm USER: cgoodridge

PHASE 3A ITEMS BERTH 11C

1. REMOVE EXISTING TIMBER RUB STRIPS AND CHOCKS
2. DREDGING
3. KING PILES
4. BULKHEAD AND ROCK ANCHORS

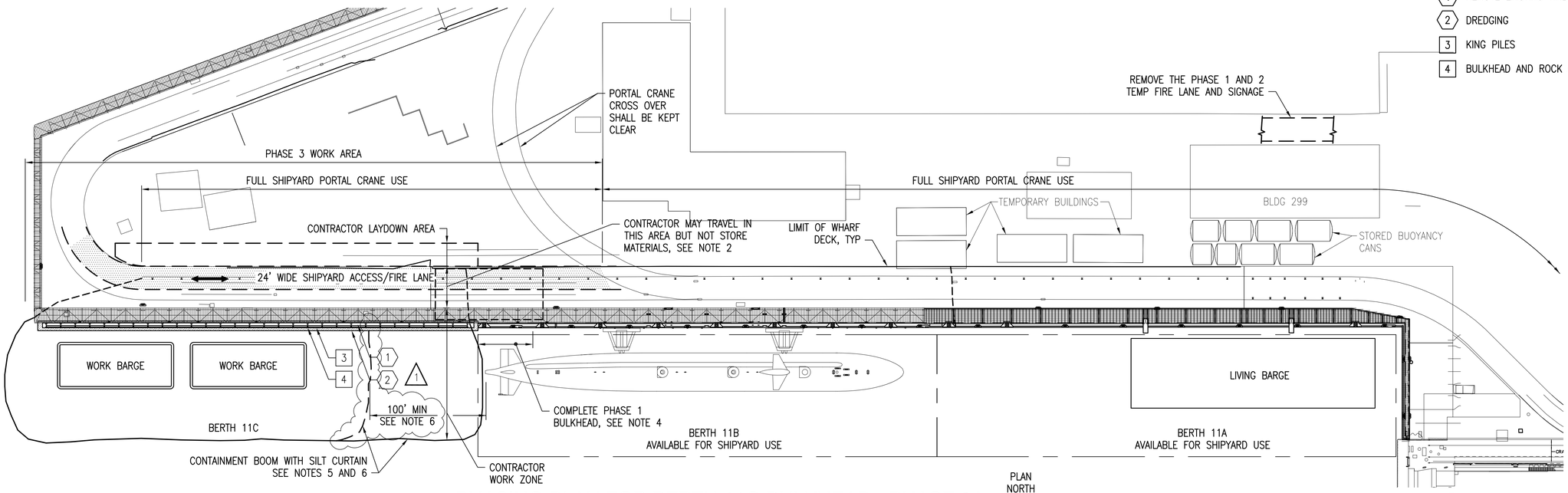

PHASING PLAN FOR BERTH 11C BULKHEAD - PHASE 3A

SCALE: 1" = 50'

NOTE:

1. FOR NOTES SEE SHEET G-102.

PHASE 3B ITEMS BERTH 11C

1. BACKFILL
2. INSTALL SUPPORT PILES
3. STRESS ROCK ANCHORS
4. RESTORE DECK AT FILL ACCESS AND SUPPORT PILE LOCATIONS
5. NEW TIMBER DECK
6. CONCRETE REPAIRS

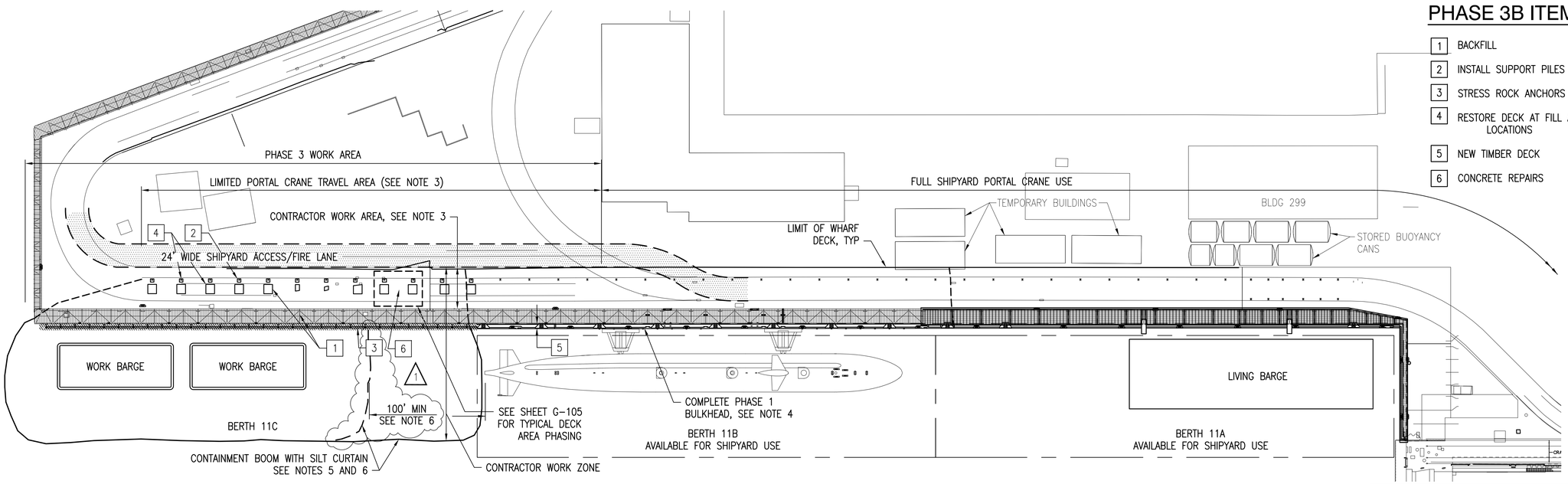

PHASING PLAN - PHASE 3B

SCALE: 1" = 50'

GRAPHIC SCALE

1"=50' 50' 0 50' 100'

CHECK GRAPHIC SCALE BEFORE USING

SYM	DESCRIPTION	DATE	APPR
1	ADDENDA	7/27/16	DWH

NAVFAC

STATE OF MAINE PAUL F. HARRINGTON 13061 LICENSED PROFESSIONAL ENGINEER 3-7-16 SEAL

MNFST A JOINT VENTURE A/E INFO

APPROVED

FOR COMMANDER NAVFAC

ACTIVITY: PER DOCUMENT FROM PNSY CODE 980, KITTERY ME

SATISFACTORY TO DATE: 05/09/16

DES DWH DRW CHG CHK DWH

PM/DM: NATHAN LIBBY

BRANCH MANAGER: NATHAN MAHER

FEAD/PM&E: AMN BAHROUR

FIRE PROTECTION: N/A

DEPARTMENT OF THE NAVY
NAVAL FACILITIES ENGINEERING COMMAND
PUBLIC WORKS DEPARTMENT – MAINE
NAVAL FACILITIES ENGINEERING COMMAND ~ MID-ATLANTIC
NAVAL SHIPYARD – PORTSMOUTH, NH
PORTSMOUTH NAVAL SHIPYARD
KITTERY, MAINE

STRUCTURAL REPAIRS AT BERTHS 11A, 11B AND 11C

PHASING PLAN – PHASE 3

EPROJECT NO.: 1356489

CONSTR. CONTR. NO. N40085-XX-C-XXXX

NAVFAC DRAWING NO. 12716006

SHEET 10 OF 144

G-104 FP2-16-646

DRAWFORM REVISION: 10 OCTOBER 2014

FILE NAME: S:\1794\Active\179410203\\TP-104A PNSY Lifting Study\02 CADD\01 General\FP2-16-646.dwg LAYOUT NAME: PHASING PLAN – PHASE 3 PLOTTED: Wednesday, July 27, 2016 – 7:27pm USER: cgoodridge

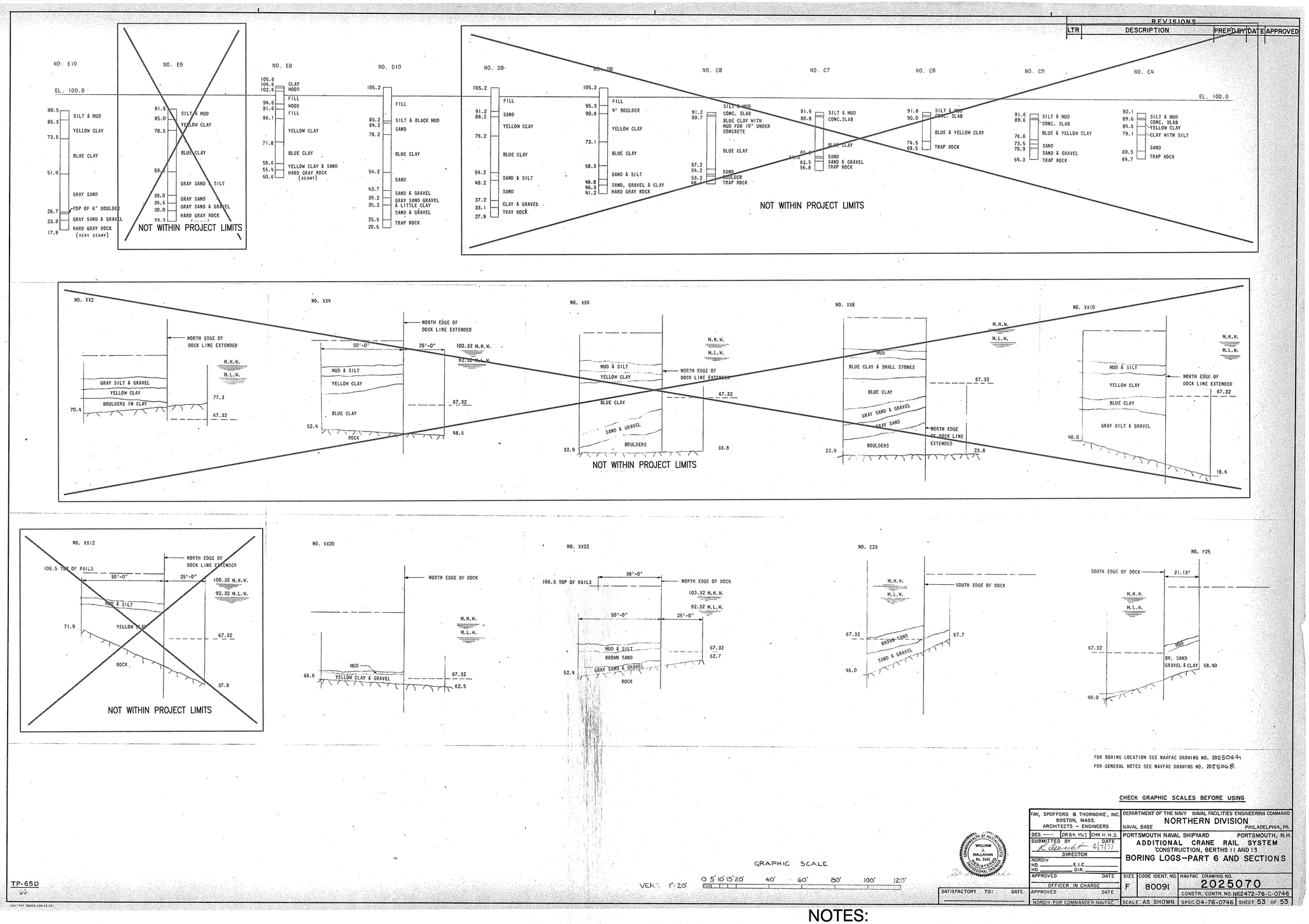

FOR BORING LOCATION SEE NAVFAC DRAWING NO. 2025024.
FOR GENERAL NOTES SEE NAVFAC DRAWING NO. 2025068.

CHECK GRAPHIC SCALES BEFORE USING

GRAPHIC SCALE
VERT. 1"=20'
0 5' 10' 15' 20' 40' 60' 80' 100' 120'

TP-65D
66

FAY, SPOFFORD & THORNDIKE, INC. BOSTON, MASS. ARCHITECTS – ENGINEERS	DEPARTMENT OF THE NAVY NAVAL FACILITIES ENGINEERING COMMAND NORTHERN DIVISION NAVAL BASE PHILADELPHIA, PA.
DES —— DR B.K. McI CHK H.H.S. SUBMITTED BY R. Arnold DATE 4/7/77 DIRECTOR	PORTSMOUTH NAVAL SHIPYARD PORTSMOUTH, N.H. ADDITIONAL CRANE RAIL SYSTEM CONSTRUCTION, BERTHS 11 AND 13 BORING LOGS–PART 6 AND SECTIONS
NORDIV HD. ____ E.I.C. ____ HD. ____ DIR. ____ APPROVED DATE OFFICER IN CHARGE	SIZE F · CODE IDENT. NO. 80091 · NAVFAC DRAWING NO. 2025070
SATISFACTORY TO: DATE: APPROVED DATE NORDIV. FOR COMMANDER NAVFAC	CONSTR. CONTR. NO. N62472-76-C-0746 · SCALE: AS SHOWN · SPEC. 04-76-0746 · SHEET 53 OF 53

COMMONWEALTH OF MASSACHUSETTS WILLIAM J. HALLAHAN No. 5141 REGISTERED PROFESSIONAL ENGINEER

NOTES:

1. FOR BORING LOCATION PLAN SEE B-101.
2. ELEVATIONS SHOWN ON THIS SHEET ARE BASED ON PNSY DATUM – SEE V-101 FOR CONVERSION INFORMATION.

REVISIONS

LTR	DESCRIPTION	PREP'D BY	DATE	APPROVED

SYM	DESCRIPTION	DATE	APPR

NAVFAC

MAINE ANGELO CAMPO No. 5124 COMMONWEALTH OF MASSACHUSETTS REGISTERED PROFESSIONAL ENGINEER
SEAL

MN FST A JOINT VENTURE
A/E INFO

APPROVED
FOR COMMANDER NAVFAC
ACTIVITY: PER DOCUMENT FROM PNSY CODE 980, KITTERY ME
SATISFACTORY TO DATE: 05/09/16
DES MN DRW CK CHK MN
PM/DM: NATHAN LIBBY
BRANCH MANAGER: NATHAN MAHER
FEAD/PM&E: AMIN BAHROUR
FIRE PROTECTION: N/A

DEPARTMENT OF THE NAVY
NAVAL FACILITIES ENGINEERING COMMAND ~ MID-ATLANTIC
PUBLIC WORKS DEPARTMENT – MAINE
PORTSMOUTH NAVAL SHIPYARD
NAVAL FACILITIES ENGINEERING COMMAND
NAVAL SHIPYARD – PORTSMOUTH, NH
KITTERY, MAINE

STRUCTURAL REPAIRS AT BERTHS 11A, 11B AND 11C

BORING LOGS – SHEET 15 OF 17

EPROJECT NO.: 1356489
CONSTR. CONTR. NO. N40085-XX-C-XXXX
NAVFAC DRAWING NO. 12716036
SHEET 40 OF 144
B-615 FP2-16-676

DRAWFORM REVISION: 10 OCTOBER 2014

FILE NAME: S:\1794\Active\179410203\V\TP-1044 PNSY Lifting Study\TP-1044 PNSY Lifting Study\02 CADD\04 Geotechnical\FP2-16-676.dwg LAYOUT NAME: BORING LOGS – SHEET 15 OF 17 PLOTTED: Wednesday, July 27, 2016 – 7:46pm USER: cgoodridge

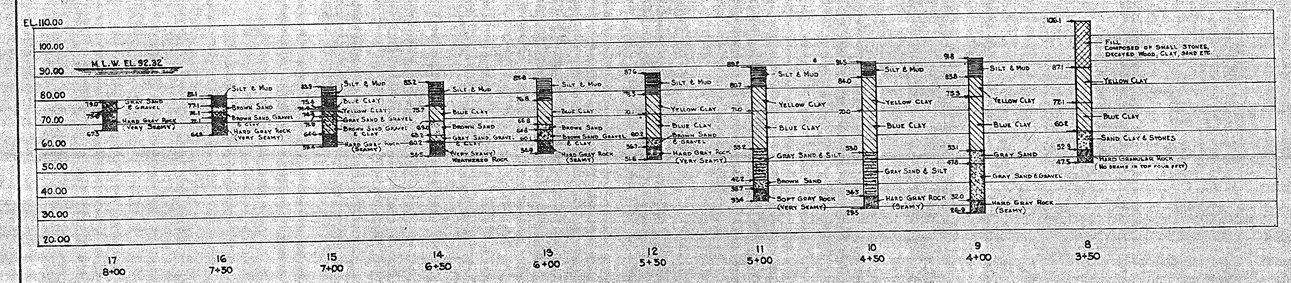

BORINGS ON LINE F

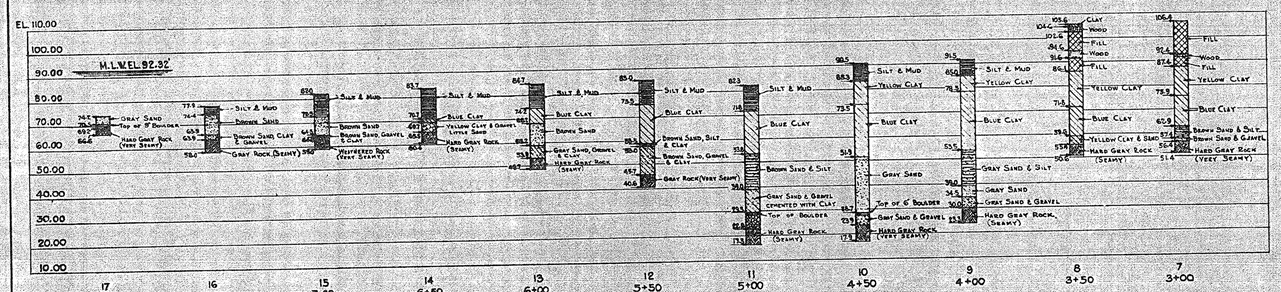

BORINGS ON LINE E

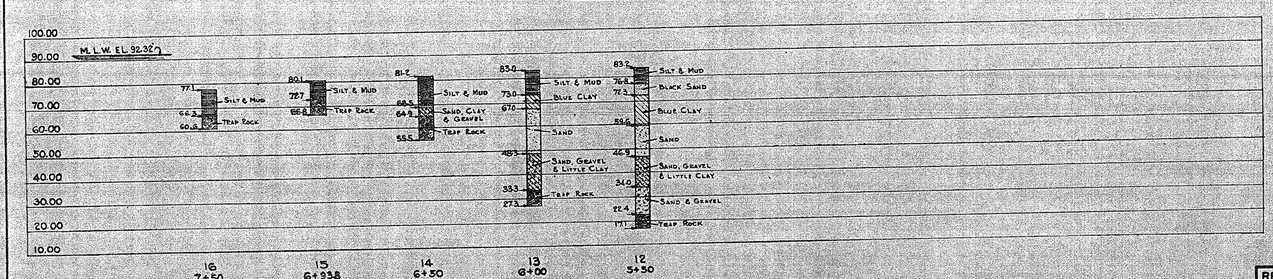

BORINGS ON LINE D

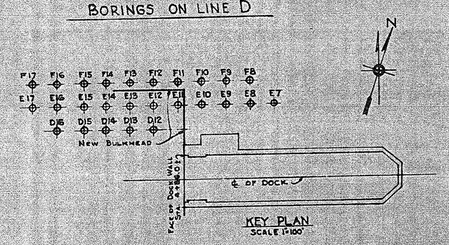

REFERENCE DRAWINGS:
LOCATION PLAN - DWG Nº P-1-201
BORINGS - PART I - DWG Nº P-1-202

GENERAL NOTE:
U.S.C. & G.S. DATUM & NAVY DATUM IS M.L.W. = EL 92.32'

REVISED TO INCORPORATE KNOWN FIELD CHANGES

REVISED	DATE	BRIEF	BY

DRY DOCK ENGINEERS
27 WILLIAM ST.
NEW YORK, N. Y.

FREDERIC R. HARRIS, INC.
MORAN, PROCTOR, FREEMAN & MUESER
PARSONS, KLAPP, BRINCKERHOFF & DOUGLAS
FAY, SPOFFORD & THORNDIKE

NAVY DEPARTMENT BUREAU OF YARDS & DOCKS
U.S. NAVY YARD
PORTSMOUTH, N. H.
DRY DOCK NO. 1
BORINGS
PART II

P.W. Drawing No. DD1-41-67

THIS DRAWING INCORPORATES SECTION ___ OF THE SPECIFICATIONS INCORPORATED BY CONTRACT NO. N.O.L. 4761

SCALE: 1"=20'-0
DATE: JULY 12, 1941
DRAWING NO. P-1-203

DES. & PROJ. MGR. F.J.G.
CHIEF ENGR. F.J.G.
IN CHARGE OF D.B.P.
DESIGN BY J.J.L.
CHECKED BY M.V.G.
DRAWN BY J.J.L.

BUREAU Y&D DRAWING 283,586
120-9.1-9

NOTE:

1. FOR BORING LOCATION PLAN SEE B-101.
2. ELEVATIONS SHOWN ON THIS SHEET ARE BASED ON PNSY DATUM – SEE V-101 FOR CONVERSION INFORMATION.

GRAPHIC SCALE
1"=20' 20' 0 20' 40'
CHECK GRAPHIC SCALE BEFORE USING

SYM	DESCRIPTION	DATE	APPR

NAVFAC

SEAL

MN FST A JOINT VENTURE
A/E INFO

APPROVED
FOR COMMANDER NAVFAC

ACTIVITY:
PER DOCUMENT FROM PNSY CODE 980, KITTERY ME

SATISFACTORY TO DATE: 05/09/16
DES MN DRW CHG CHK MN
PM/DM: NATHAN LIBBY
BRANCH MANAGER: NATHAN MAHER
FEAD/PMAE: AMIN BAHROUR
FIRE PROTECTION: N/A

DEPARTMENT OF THE NAVY
NAVAL FACILITIES ENGINEERING COMMAND – MID-ATLANTIC
PUBLIC WORKS DEPARTMENT – MAINE
PORTSMOUTH NAVAL SHIPYARD
NAVAL SHIPYARD – PORTSMOUTH, NH
KITTERY, MAINE

STRUCTURAL REPAIRS
AT BERTHS 11A, 11B AND 11C

BORING LOGS – SHEET 17 OF 17

EPROJECT NO.: 1356489
CONSTR. CONTR. NO. N40085-XX-C-XXXX
NAVFAC DRAWING NO. 12716038
SHEET 42 OF 144
B-617 FP2-16-678

DRAWFORM REVISION: 10 OCTOBER 2014

FILE NAME: S:\1794\Active\1794102031\(TP-104A PNSY Lifting Study)\02 CADD\04 Geotechnical\FP2-16-678.dwg LAYOUT NAME: BORING LOGS – SHEET 17 OF 17 PLOTTED: Wednesday, July 27, 2016 – 7:47pm USER: cpoodridge

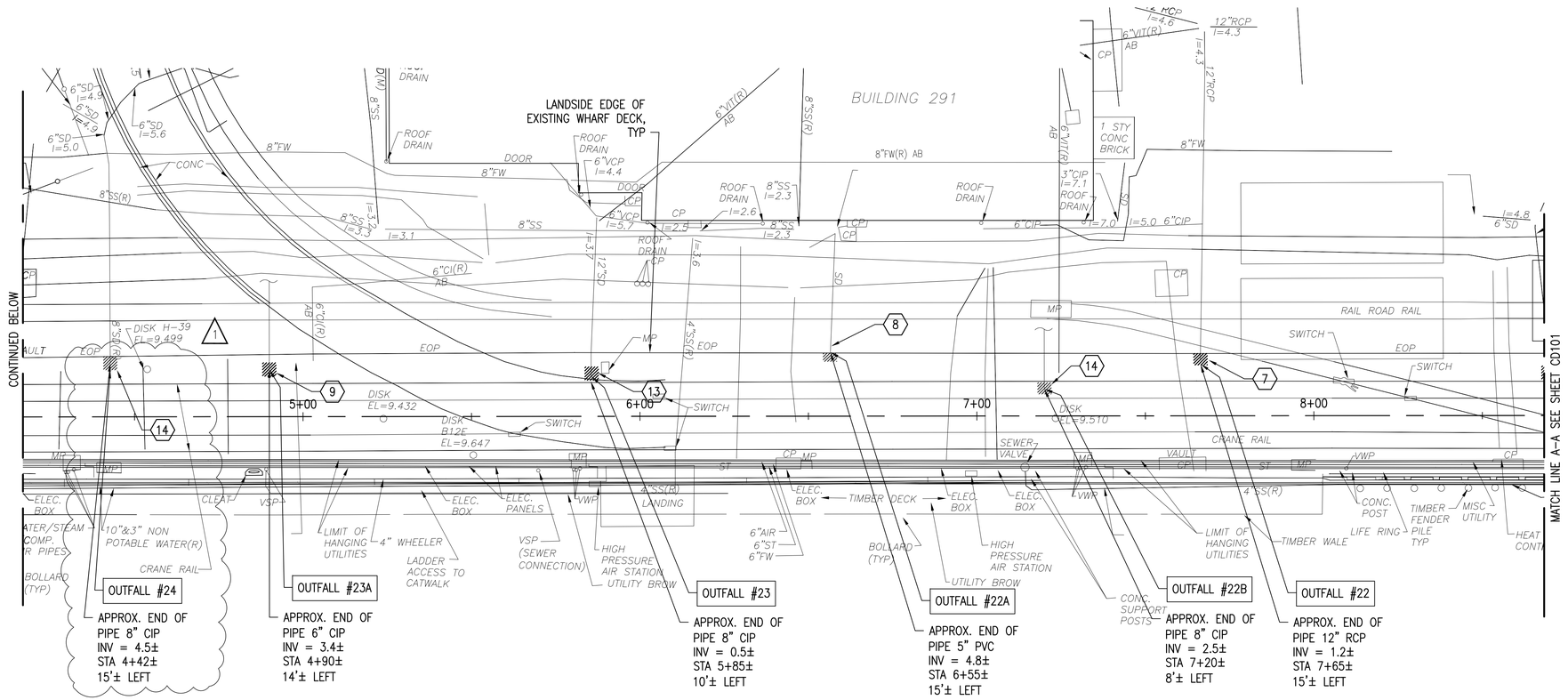

DRAINAGE DEMOLITION PLAN

SCALE: 1" = 20'

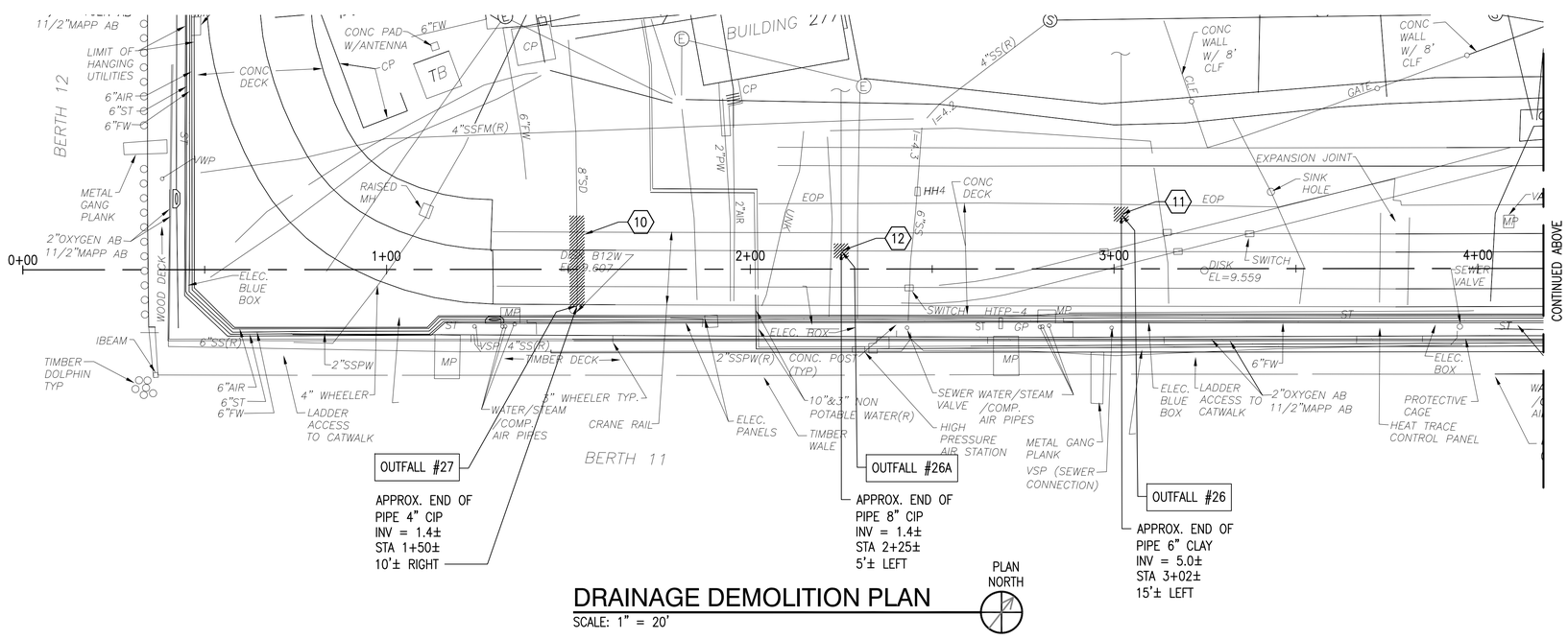

DRAINAGE DEMOLITION PLAN

SCALE: 1" = 20'

DEMOLITION NOTES

1. EXPOSE END OF EXISTING 8" STORM DRAIN OUTFALL.
2. EXISTING 15" RCP DRAIN TO BE ABANDONED. PLUG AT OUTFALL AND MANHOLE CONNECTION WITH BRICK AND MORTAR. EXCAVATE FOR NEW STORM DRAIN.
3. REMOVE AND DISPOSE OF 15" CLAY DRAIN PIPE FROM OUTFALL TO MANHOLE AS SHOWN.
4. REMOVE AND DISPOSE OF 3 FEET OF 8" CIP AT END OF EXISTING OUTFALL.
5. REMOVE AND DISPOSE OF 12" CIP BELL AT END OF PIPE.
6. REMOVE AND DISPOSE OF 8" CIP BELL AT END OF PIPE.
7. REMOVE AND DISPOSE OF 12" RCP BELL AT END OF PIPE.
8. REMOVE AND DISPOSE OF 6" PVC BELL AT END OF PIPE.
9. REMOVE AND DISPOSE OF 6" CIP BELL AT END OF PIPE.
10. REMOVE AND DISPOSE 30 FEET OF 4" CIP DRAIN FROM OUTFALL END.
11. REMOVE AND DISPOSE OF 6" CLAY BELL AT END OF PIPE. REMOVE 1'ø± RIP-RAP AS NEEDED. REMOVE 10 LF OF DIRT/SOIL FROM PIPE.
12. REMOVE AND DISPOSE 8' OF 8" CIP AT END OF EXISTING OUTFALL.
13. REMOVE AND DISPOSE OF 8" CIP BELL AT END OF PIPE.
14. REMOVE AND DISPOSE 8" CIP BELL AT END OF PIPE.

GENERAL NOTES

1. CONTRACTOR TO FIELD VERIFY EXISTING PIPE LOCATIONS, SIZES, MATERIALS, AND INVERTS PRIOR TO ORDERING MATERIAL TO BE INCORPORATED INTO THE WORK.

KEY PLAN

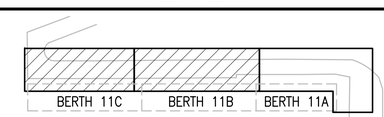

GRAPHIC SCALE

1"=20' 20' 0 20' 40'

CHECK GRAPHIC SCALE BEFORE USING

SYM	DESCRIPTION	DATE	APPR
1	ADDENDA	7/27/16	KAK

NAVFAC

SEAL: COMMONWEALTH OF MASSACHUSETTS — DAVID P. ANDERSON — CIVIL — No. 37119 — 3/17/16

MNFST A JOINT VENTURE

A/E INFO

APPROVED

FOR COMMANDER NAVFAC

ACTIVITY: PER DOCUMENT FROM PNSY CODE 980, KITTERY ME

SATISFACTORY TO DATE: 05/09/16

DES KAK | DRW HBF | CHK KAK

PM/DM: NATHAN LIBBY

BRANCH MANAGER: NATHAN MAHER

FEAD/PM&E: AMIN BAHROUR

FIRE PROTECTION: N/A

DEPARTMENT OF THE NAVY
NAVAL FACILITIES ENGINEERING COMMAND ~ MID-ATLANTIC
PUBLIC WORKS DEPARTMENT ~ MAINE
NAVAL SHIPYARD ~ PORTSMOUTH, NH
PORTSMOUTH NAVAL SHIPYARD
KITTERY, MAINE

NAVAL FACILITIES ENGINEERING COMMAND

STRUCTURAL REPAIRS AT BERTHS 11A, 11B AND 11C

DEMOLITION PLAN – DRAINAGE – SHEET 2 OF 2

EPROJECT NO.: 1356489

CONSTR. CONTR. NO. N40085-XX-C-XXXX

NAVFAC DRAWING NO. 12716040

SHEET 44 OF 144

CD102 | FP2-16-680

DRAWFORM REVISION: 10 OCTOBER 2014

FILE NAME: S:\1794\Active\179410203\\TP-104A PNSY Lifting Study\TP-104A PNSY Lifting Study\02 CADD\05 Civil\FP2-16-678.dwg LAYOUT NAME: DEMOLITION PLAN – DRAINAGE – SHEET 2 OF 2 PLOTTED: Wednesday, July 27, 2016 – 7:28pm USER: cgoodridge

SHEET 2 OF 2

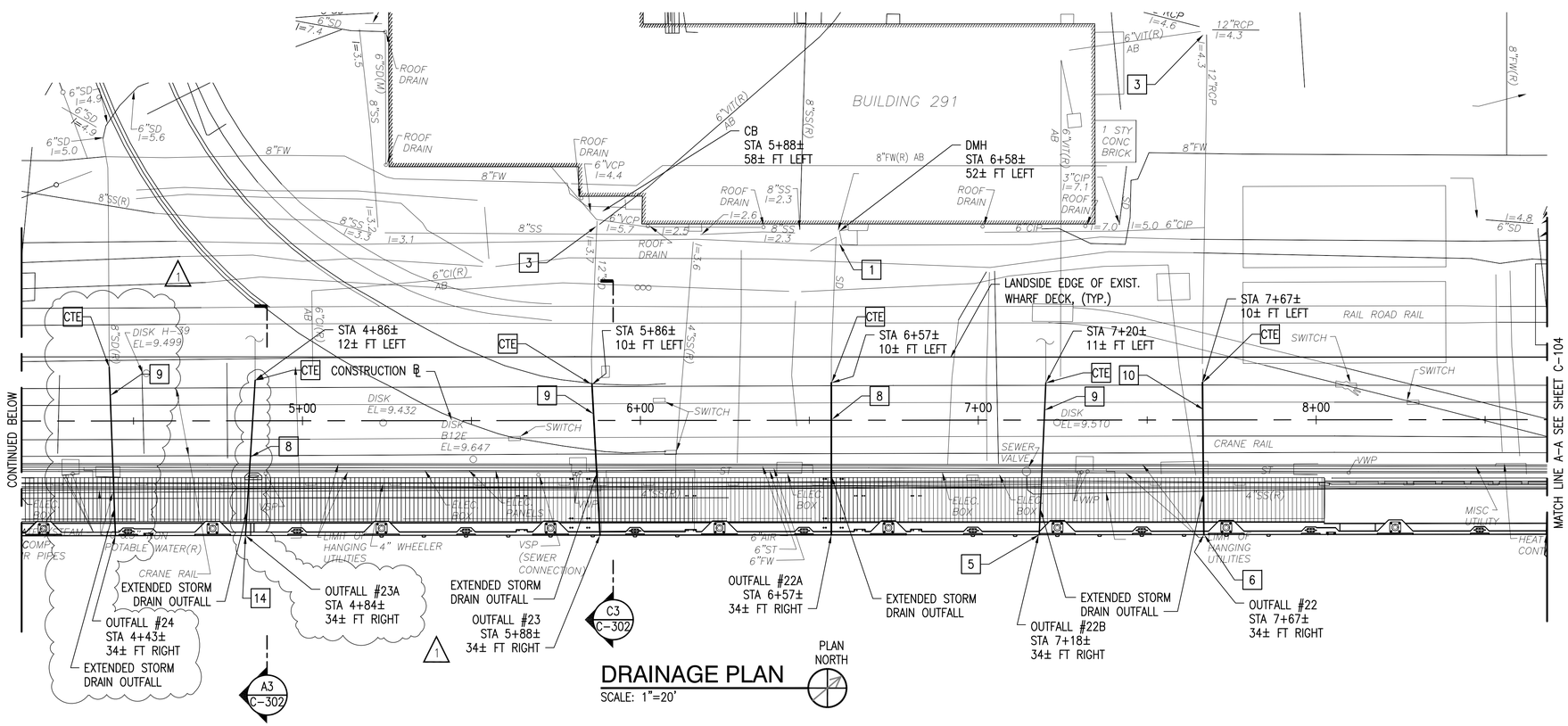

DRAINAGE PLAN

SCALE: 1"=20'

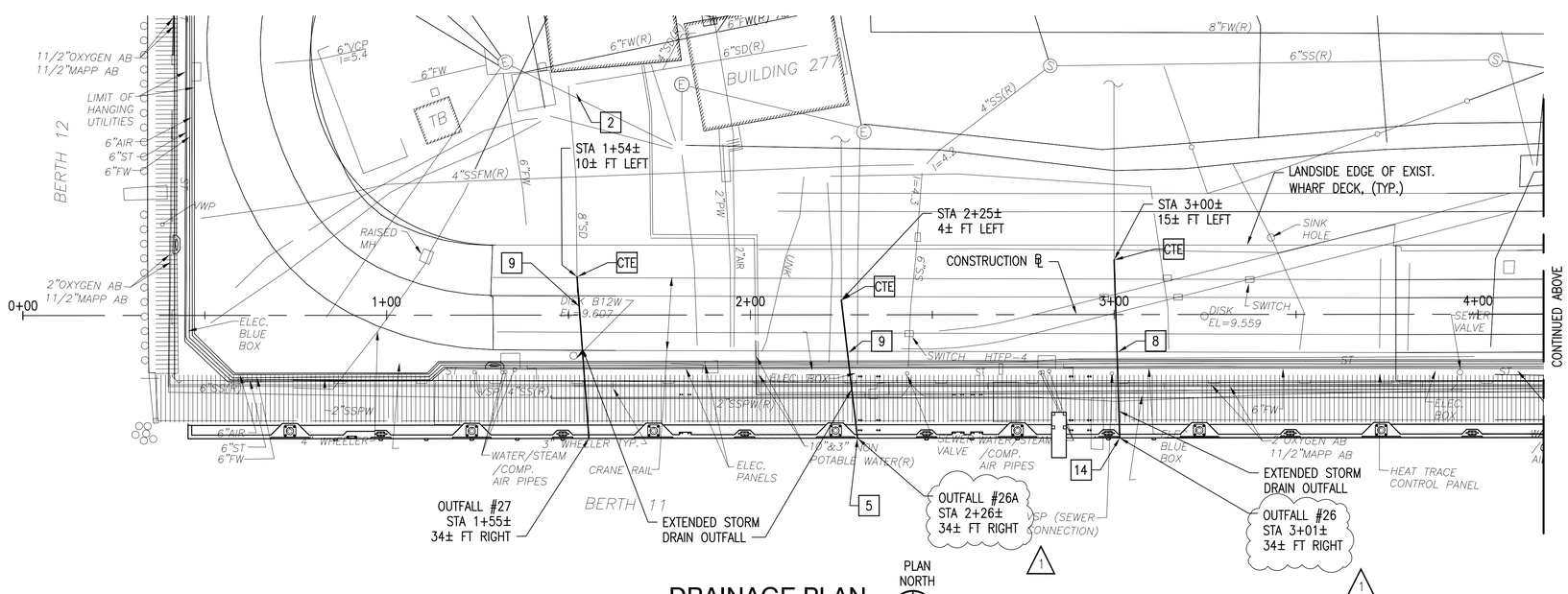

DRAINAGE PLAN

SCALE: 1"=20'

GENERAL NOTES

1. EXISTING DRAIN PIPE TO BE EXTENDED BY INSTALLING PVC DRAIN PIPE.
2. CONNECT TO EXISTING DRAIN PIPE WITH ELASTROMERIC SLEEVE. SEE DETAILS ON SHEET C-502.
3. INSTALL IN-LINE ELASTROMERIC CHECK VALVE IN EXISTING MH'S, CB'S, OR END OF PIPE AS SHOWN. GC TO FIELD VERIFY PIPE SIZES OF EXISTING PIPES PRIOR TO ORDERING VALVES.
4. STORM DRAIN EXTENSIONS SHALL BE ROUTED TO AVOID EXISTING AND PROPOSED PILES.
5. ENSURE EDGE OF OPENING FOR STORM DRAIN PIPE PENETRATIONS ARE A MINIMUM OF 18 INCHES FROM NEAREST EDGE OF KING PILE FLANGE. MAKE NECESSARY ADJUSTMENTS TO DRAIN ALIGNMENT, IF NECESSARY.
6. REPAINT OUTFALLS SIGNS ON FACE OF CONCRETE BULKHEAD. MATCH EXISTING SIZE AND COLOR.

DRAINAGE SYSTEM NOTES

1. PROVIDE 6" IN-LINE ELASTOMERIC CHECK VALVE IMMEDIATELY DOWNSTREAM OF STRUCTURE.
2. PROVIDE 8" IN-LINE ELASTOMERIC CHECK VALVE IMMEDIATELY DOWNSTREAM OF STRUCTURE.
3. PROVIDE 12" IN-LINE ELASTOMERIC CHECK VALVE IMMEDIATELY DOWNSTEAM OF STRUCTURE.
4. PROVIDE 18" IN-LINE ELASTOMERIC CHECK VALVE IMMEDIATELY DOWNSTREAM OF STRUCTURE.
5. PROVIDE 10" IN-LINE ELASTOMERIC CHECK VALVE AT END OF PIPE.
6. PROVIDE 15" IN-LINE ELASTOMERIC CHECK VALVE AT END OF PIPE.
7. PROVIDE 18" IN-LINE ELASTOMERIC CHECK VALVE AT END OF PIPE.
8. PROVIDE 8" PVC DRAIN PIPE.
9. PROVIDE 10" PVC DRAIN PIPE.
10. PROVIDE 15" PVC DRAIN PIPE.
11. PROVIDE 18" PVC DRAIN PIPE.
12. PROVIDE 18" PVC DRAIN PIPE BETWEEN CATCH BASIN AND EDGE OF LANDSIDE WHARF DECK. PROTECT AND MAINTAIN EXISTING RAIL SUPPORTS AND BACKFILL AND RESTORE SURFACE, SEE DETAIL ON SHEET C-502. CONNECT TO EXISTING STRUCTURE. SEE TYPICAL DRAIN PIPE CONNECTION DETAIL ON SHEET C-502
13. ADD 10" PVC 22 1/2° PVC BEND AS NECESSARY TO AVOID PILES.

CTE CONNECT TO EXISTING.

14. PROVIDE 8" IN-LINE ELASTOMERIC CHECK VALVE AT END OF PIPE.

KEY PLAN

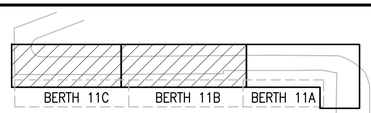

GRAPHIC SCALE

1"=20' 20' 0 20' 40'

CHECK GRAPHIC SCALE BEFORE USING

SYM	DESCRIPTION	DATE	APPR
1	ADDENDA	7/27/16	KAK

NAVFAC

COMMONWEALTH OF MASSACHUSETTS DAVID P. ANDERSON CIVIL No. 37119A 3/17/16 SEAL

MN FST A JOINT VENTURE A/E INFO

APPROVED

FOR COMMANDER NAVFAC

ACTIVITY: PER DOCUMENT FROM PNSY CODE 980, KITTERY ME

SATISFACTORY TO DATE: 05/09/16

DES KAK DRW HBF CHK KAK

PM/DM: NATHAN LIBBY

BRANCH MANAGER: NATHAN MAHER

FEAD/PM&E: AMIN BAHROUR

FIRE PROTECTION: N/A

DEPARTMENT OF THE NAVY
NAVAL FACILITIES ENGINEERING COMMAND
PUBLIC WORKS DEPARTMENT - MAINE
PORTSMOUTH NAVAL SHIPYARD

NAVAL FACILITIES ENGINEERING COMMAND ~ MID-ATLANTIC
NAVAL SHIPYARD - PORTSMOUTH, NH
KITTERY, MAINE

STRUCTURAL REPAIRS AT BERTHS 11A, 11B AND 11C

STORM DRAINAGE PLAN - SHEET 2 OF 2

EPROJECT NO.: 1356489

CONSTR. CONTR. NO. N40085-XX-C-XXXX

NAVFAC DRAWING NO. 12716045

SHEET 49 OF 144

C-105 FP2-16-685

DRAWFORM REVISION: 10 OCTOBER 2014

FILE NAME: S:\1794\Active\179410203\\TP-104A PNSY Lifting Study\TP-104A PNSY Lifting Study\02 CADD\05 Civil\FP2-16-685.dwg LAYOUT NAME: STORM DRAINAGE PLAN - SHEET 2 OF 2 PLOTTED: Wednesday, July 27, 2016 - 7:28pm USER: cgoodridge

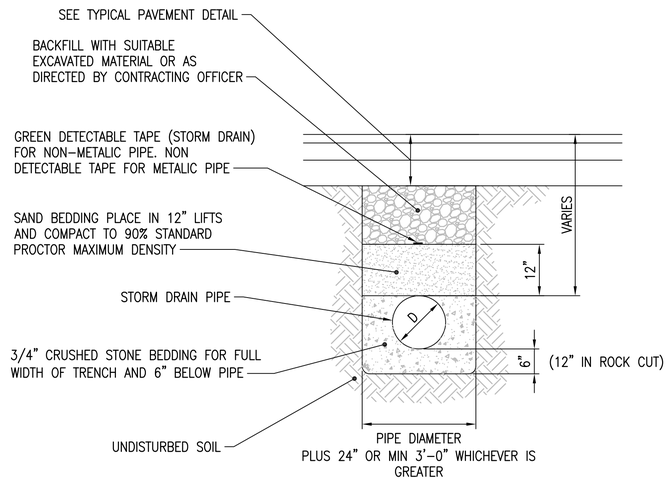

PIPE TRENCH DETAIL (D1)

NOT TO SCALE — C-502

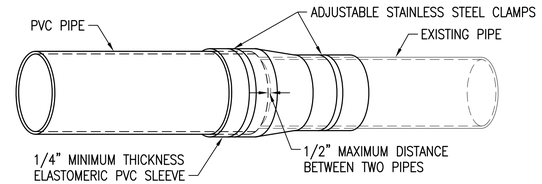

NOTE:

1. THE CONTRACTOR SHALL VERIFY THE O.D. OF THE EXISTING PIPE PRIOR TO ORDERING THE COUPLING.

TYPICAL SEWER AND DRAIN COUPLING DETAIL (D3)

NOT TO SCALE — C-301, C-302

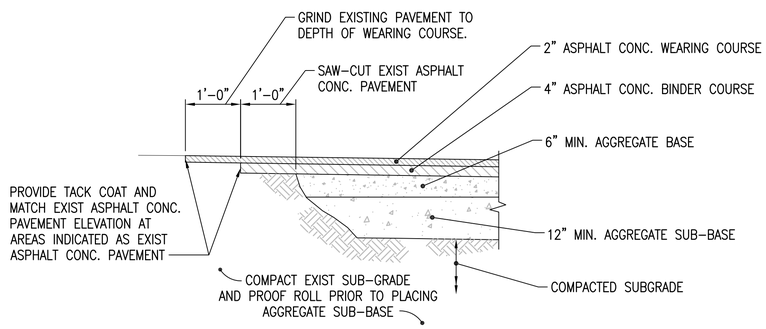

TYPICAL ASPHALT CONCRETE PAVEMENT DETAIL - CIA (B1)

NOT TO SCALE

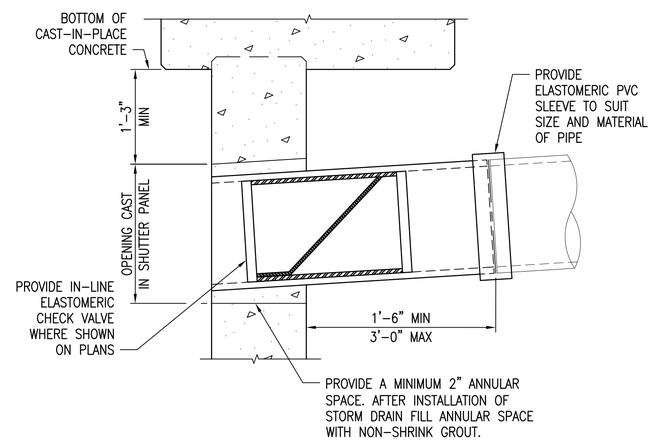

TYPICAL DRAIN PIPE PENETRATION AT SHUTTER PANEL (B3)

NOT TO SCALE — C-301, C-302

SHUTTER PANEL PIPE PENETRATION			
OUTFALL #	STATION	NOMINAL DIAMETER (IN)	MAXIMUM INVERT ELEVATION (FT)
15	21+11	10	-2.27
16	20+67	18	-2.95
17	12+00	18	-3.35
18	11+13	10	-2.27
19	9+90	15	-2.68
21	8+70	10	-2.27
22	7+67	18	-2.68
22A	6+57	8	-2.10
22B	7+18	10	-2.27
23	5+86	15	-2.68
23A	4+84	8	-2.10
24	4+43	10	-2.27
26	3+01	8	-2.10
26A	2+26	10	-2.27
27	1+52	10	-2.27

1

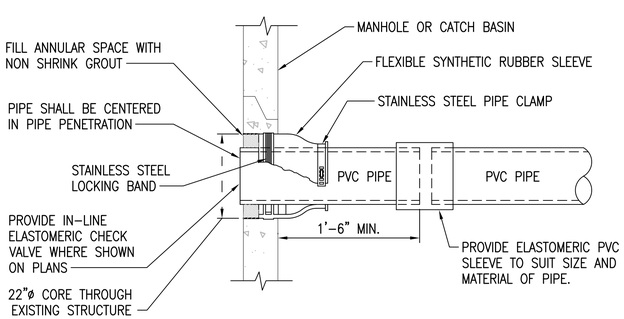

TYPICAL DRAIN PIPE CONNECTION DETAIL (A1)

NOT TO SCALE — C-502

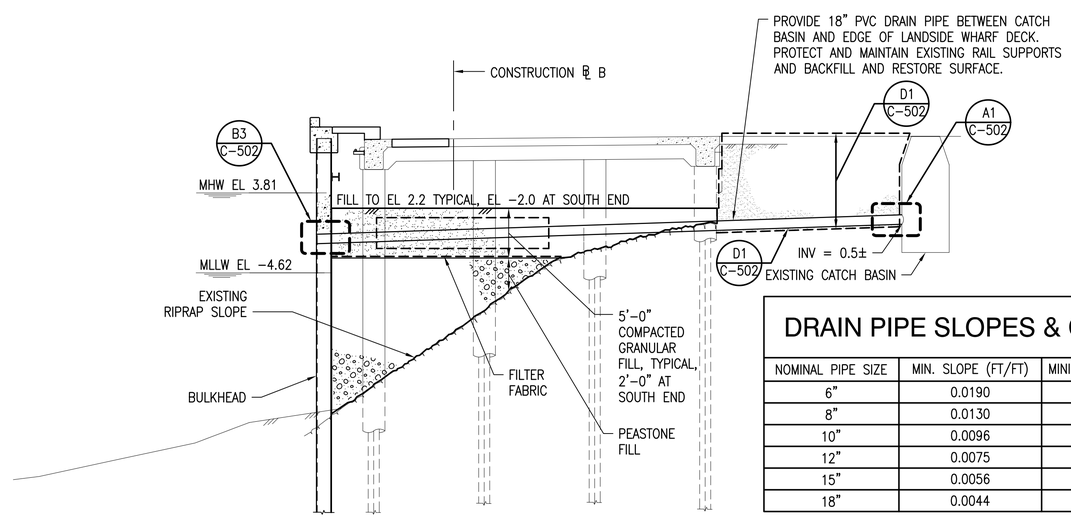

SECTION - OUTFALL No 16 (A4)

SCALE: 1/8" = 1'-0" — C-104

DRAIN PIPE SLOPES & COVER		
NOMINAL PIPE SIZE	MIN. SLOPE (FT/FT)	MINIMUM COVER (IN.)
6"	0.0190	8
8"	0.0130	8
10"	0.0096	10
12"	0.0075	10
15"	0.0056	14
18"	0.0044	14

GRAPHIC SCALE

1/8"=1'-0" — 4' 0 4' 8' 12' 16'

CHECK GRAPHIC SCALE BEFORE USING

SYM	DESCRIPTION	DATE	APPR
1	ADDENDA	7/27/16	KAK

NAVFAC

COMMONWEALTH OF MASSACHUSETTS — DAVID P. ANDERSON — CIVIL — No. 37119 — 3/17/16 — SEAL

MN FST A JOINT VENTURE — A/E INFO

APPROVED

FOR COMMANDER NAVFAC

ACTIVITY: PER DOCUMENT FROM PNSY CODE 980, KITTERY ME

SATISFACTORY TO DATE: 05/09/16

DES: KAK | DRW: HBF | CHK: KAK

PM/DM: NATHAN LIBBY

BRANCH MANAGER: NATHAN MAHER

FEAD/PM&E: AMIN BAHROUR

FIRE PROTECTION: N/A

DEPARTMENT OF THE NAVY
NAVAL FACILITIES ENGINEERING COMMAND
PUBLIC WORKS DEPARTMENT - MAINE
PORTSMOUTH NAVAL SHIPYARD

NAVAL FACILITIES ENGINEERING COMMAND ~ MID-ATLANTIC
NAVAL SHIPYARD ~ PORTSMOUTH, NH
KITTERY, MAINE

STRUCTURAL REPAIRS AT BERTHS 11A, 11B AND 11C

DRAINAGE DETAILS

EPROJECT NO.: 1356489

CONSTR. CONTR. NO. N40085-XX-C-XXXX

NAVFAC DRAWING NO. 12716057

SHEET 61 OF 144

C-502 | FP2-16-697

DRAWFORM REVISION: 10 OCTOBER 2014

FILE NAME: S:\1794\Active\179410203\\TP-104A PNSY Lifting Study\TP-104A PNSY Lifting Study\02 CADD\05 Civil\FP2-16-697.dwg LAYOUT NAME: DRAINAGE DETAILS PLOTTED: Wednesday, July 27, 2016 - 7:28pm USER: cgoodridge

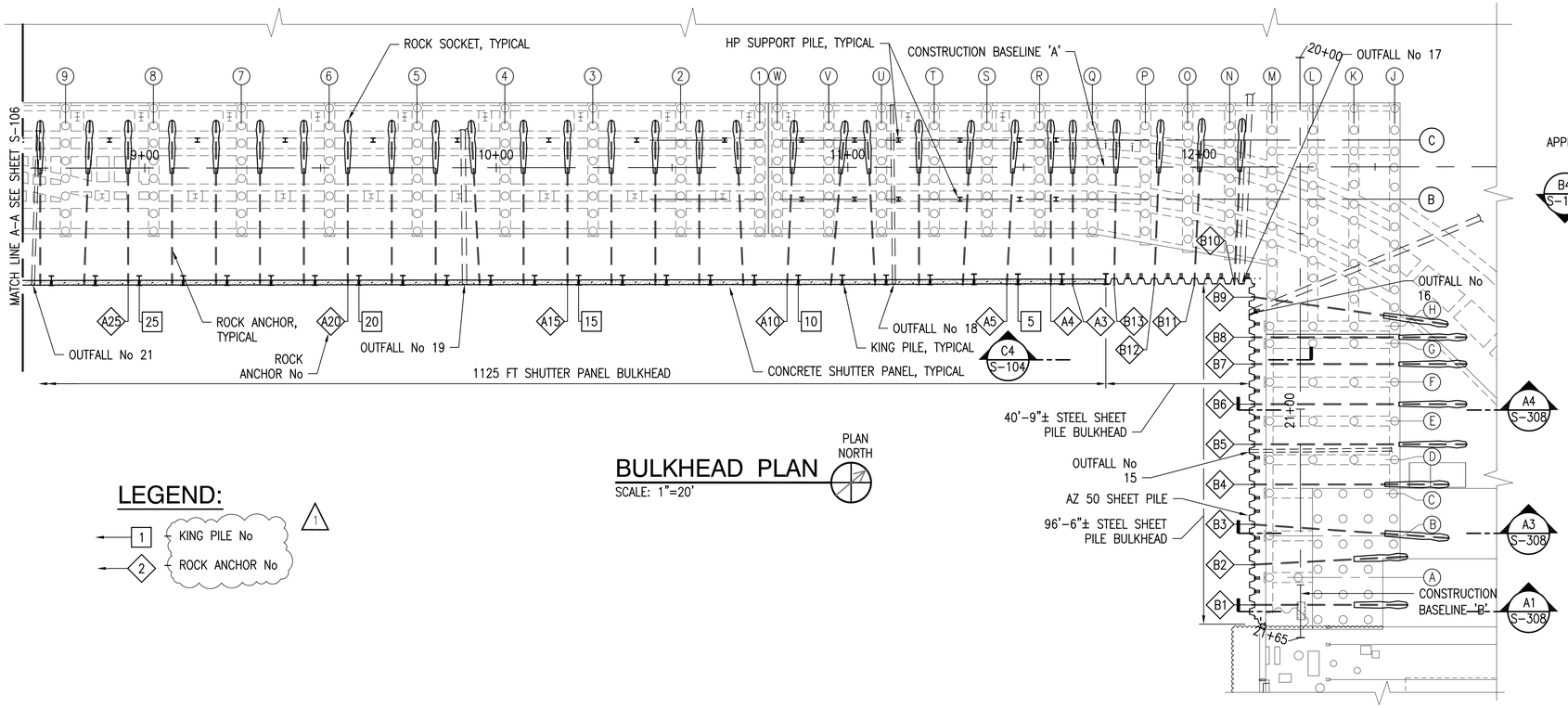

BULKHEAD PLAN

SCALE: 1"=20'

PLAN NORTH

LEGEND:

1 — KING PILE No

2 — ROCK ANCHOR No

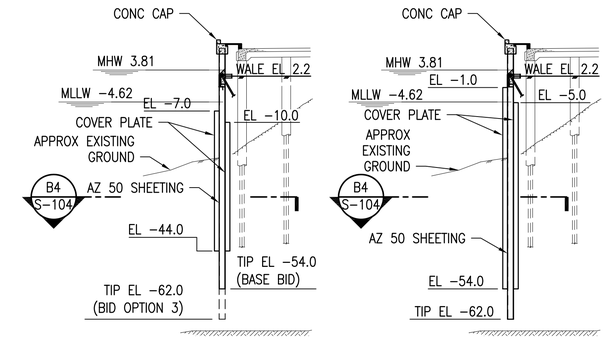

BASE BID/ BID OPTION 3

BID OPTION 4

SECTION - SHEET PILE

SCALE: 1"=20'

S-104 C4

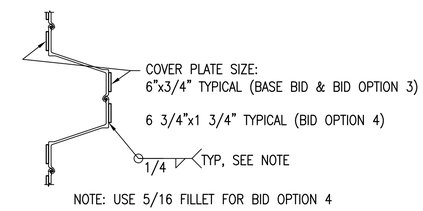

NOTE: USE 5/16 FILLET FOR BID OPTION 4

SECTION - COVER PLATE

SCALE: 1/2" = 1'-0"

S-104 B4

NOTES:

1. WALE NOT SHOWN IN PLAN VIEW FOR CLARITY. SEE SHEET S-501 FOR WALE DETAILS.
2. SEE SHEET S-608 FOR ROCK ANCHOR TABLES AND SCHEDULES.
3. SEE SHEET S-303 FOR SHUTTER PANEL DETAILS.

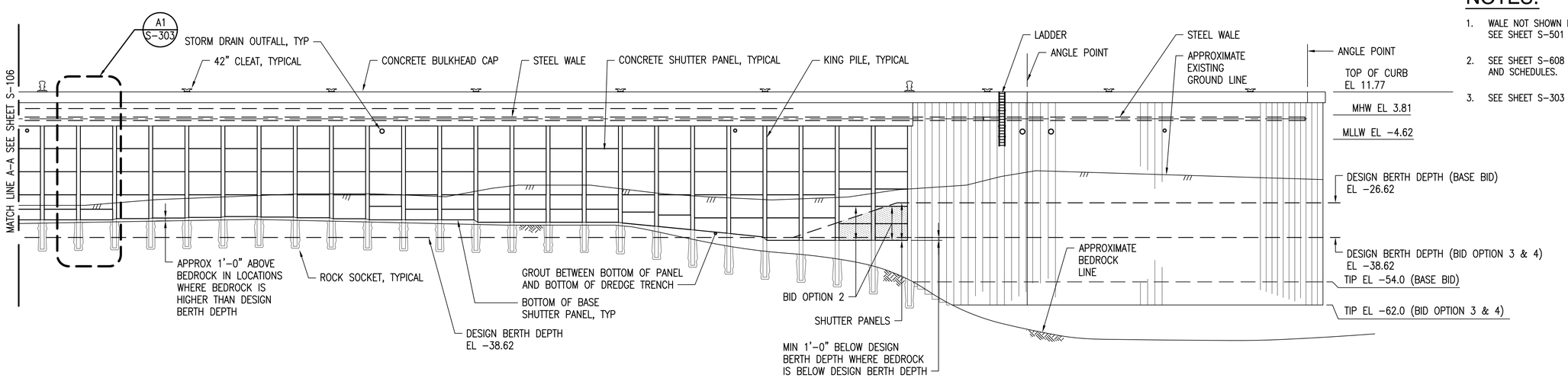

BULKHEAD ELEVATION

SCALE: 1"=20'

A1

3/4"=1'-0"

1' 0' 1' 2' 4'

GRAPHIC SCALE

1"=20'

20' 0 20' 40'

CHECK GRAPHIC SCALE BEFORE USING

SYM	DESCRIPTION	DATE	APPR
	ADDENDA	7/27/16	DWH

NAVFAC

DONALD W. HARVIE CIVIL No. 31020 REGISTERED PROFESSIONAL ENGINEER STATE OF MAINE

3/7/16

SEAL

MNFST A JOINT VENTURE

A/E INFO

APPROVED

FOR COMMANDER NAVFAC

ACTIVITY: PER DOCUMENT FROM PNSY CODE 980, KITTERY ME

SATISFACTORY TO DATE: 05/09/16

DES DJM | DRW RWT | CHK DJM

PM/DM: NATHAN LIBBY

BRANCH MANAGER: NATHAN MAHER

FEAD/PM&E: AMIN BAHROUR

FIRE PROTECTION: N/A

DEPARTMENT OF THE NAVY
NAVAL FACILITIES ENGINEERING COMMAND
PUBLIC WORKS DEPARTMENT – MAINE
PORTSMOUTH NAVAL SHIPYARD

NAVAL FACILITIES ENGINEERING COMMAND – MID-ATLANTIC
NAVAL SHIPYARD – PORTSMOUTH, NH
KITTERY, MAINE

STRUCTURAL REPAIRS AT BERTHS 11A, 11B AND 11C

BULKHEAD PLAN AND ELEVATION – SHEET 1 OF 3

EPROJECT NO.: 1356489

CONSTR. CONTR. NO. N40085-XX-C-XXXX

NAVFAC DRAWING NO. 12716065

SHEET 69 OF 144

S-104 | FP2-16-705

DRAWFORM REVISION: 10 OCTOBER 2014

FILE NAME: S:\1794\Active\179410203\\TP-1044 PNSY Lifting Study\TP-1044 PNSY Lifting Study\02 CADD\08 Structural\FP2-16-707.dwg LAYOUT NAME: BULKHEAD PLAN AND ELEVATION – SHEET 1 OF 3 PLOTTED: Wednesday, July 27, 2016 – 7:40pm USER: cgoodridge

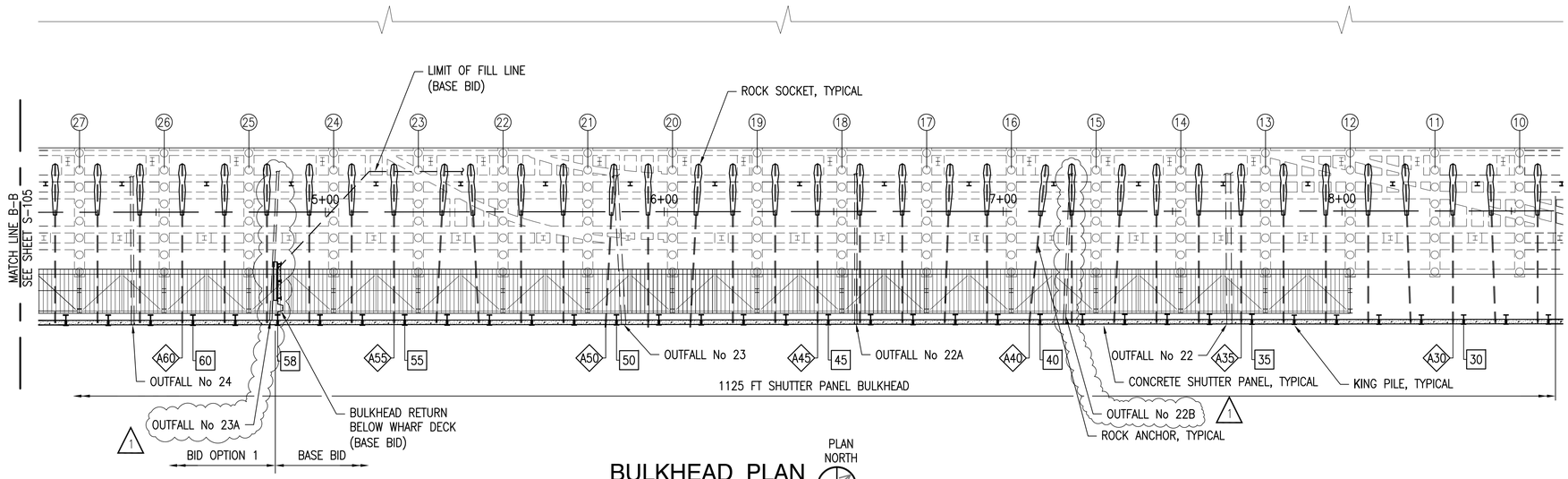

BULKHEAD PLAN

SCALE: 1"=20'

PLAN NORTH

NOTES:

1. WALE NOT SHOWN IN PLAN VIEW FOR CLARITY. SEE SHEET S–501 FOR WALE DETAILS.
2. SEE SHEET S–608 FOR ROCK ANCHOR TABLES AND SCHEDULES.
3. SEE SHEET S–303 FOR SHUTTER PANEL DETAILS.

LEGEND:

1 — KING PILE No

2 — ROCK ANCHOR No

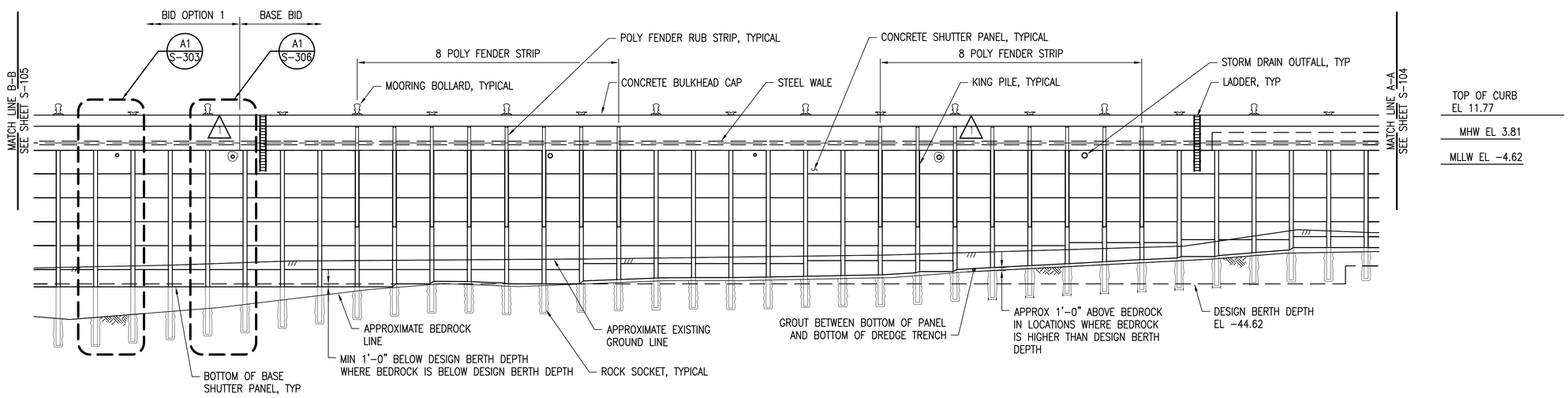

BULKHEAD ELEVATION (B1)

SCALE: 1"=20'

GRAPHIC SCALE

1"=20' — 20' 0 20' 40'

CHECK GRAPHIC SCALE BEFORE USING

SYM	DESCRIPTION	DATE	APPR
1	ADDENDA	7/27/16	DWH

NAVFAC

DONALD W. HARVIE CIVIL No. 31020 REGISTERED PROFESSIONAL ENGINEER STATE OF MAINE
3/7/16
SEAL

MNFST A JOINT VENTURE
A/E INFO

APPROVED

FOR COMMANDER NAVFAC

ACTIVITY: PER DOCUMENT FROM PNSY CODE 980, KITTERY ME

SATISFACTORY TO DATE: 05/09/16

DES DJM | DRW RWT | CHK DJM

PM/DM: NATHAN LIBBY

BRANCH MANAGER: NATHAN MAHER

FEAD/PM&E: AMIN BAHROUR

FIRE PROTECTION: N/A

DEPARTMENT OF THE NAVY
NAVAL FACILITIES ENGINEERING COMMAND
PUBLIC WORKS DEPARTMENT – MAINE
PORTSMOUTH NAVAL SHIPYARD

NAVAL FACILITIES ENGINEERING COMMAND ~ MID-ATLANTIC
NAVAL SHIPYARD – PORTSMOUTH, NH
KITTERY, MAINE

STRUCTURAL REPAIRS AT BERTHS 11A, 11B AND 11C

BULKHEAD PLAN AND ELEVATION – SHEET 2 OF 3

EPROJECT NO.: 1356489

CONSTR. CONTR. NO. N40085–XX–C–XXXX

NAVFAC DRAWING NO. 12716066

SHEET 70 OF 144

S-105 | FP2-16-706

DRAWFORM REVISION: 10 OCTOBER 2014

FILE NAME: S:\1794\Active\179410203\TP-104A PNSY Lifting Study\TP-104A PNSY Lifting Study\02 CADD\08 Structural\FP2-16-707.dwg LAYOUT NAME: BULKHEAD PLAN AND ELEVATION – SHEET 2 OF 3 PLOTTED: Wednesday, July 27, 2016 – 7:40pm USER: cgoodridge

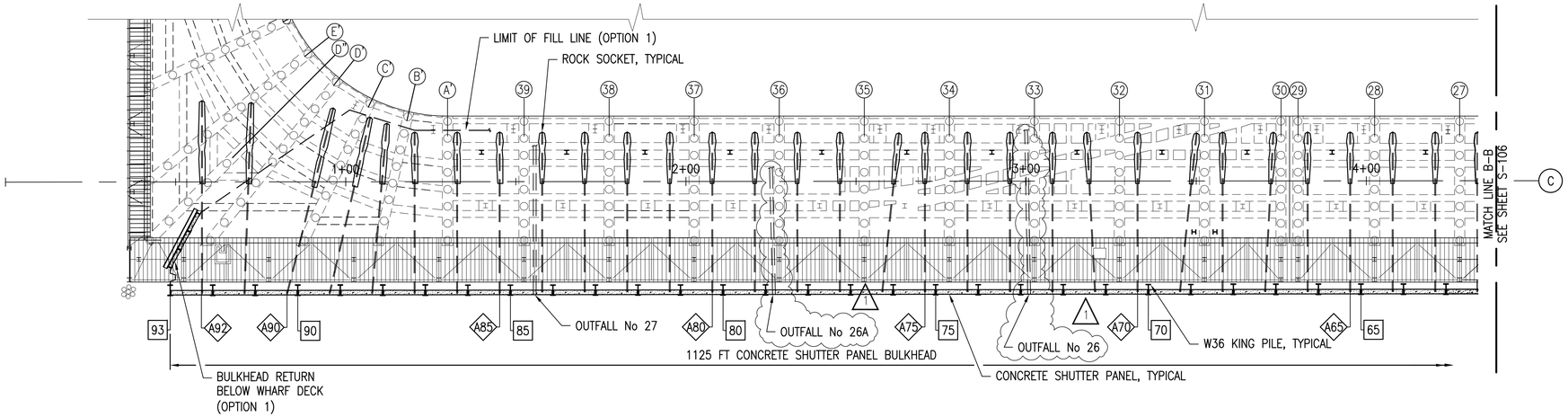

BULKHEAD PLAN

SCALE: 1"=20'

PLAN NORTH

NOTES:

1. WALE NOT SHOWN IN PLAN VIEW FOR CLARITY. SEE SHEET S-501 FOR WALE DETAILS.
2. SEE SHEET S-608 FOR ROCK ANCHOR TABLES AND SCHEDULES.
3. SEE SHEET S-303 FOR SHUTTER PANEL DETAILS.

LEGEND:

1 – KING PILE No

2 – ROCK ANCHOR No

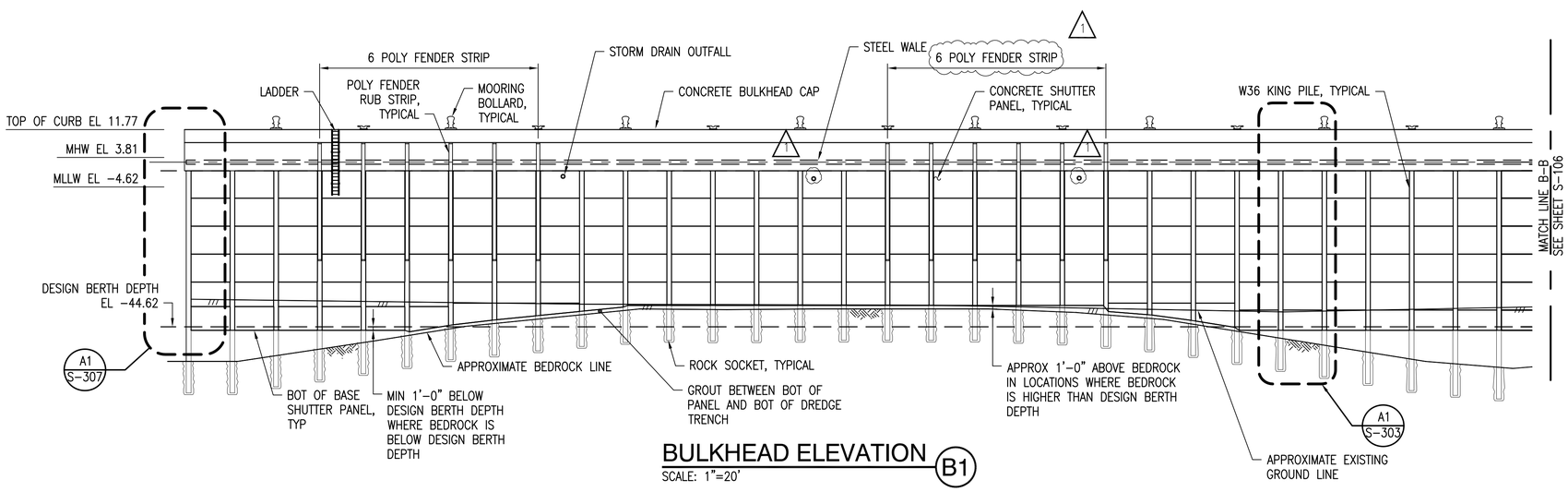

BULKHEAD ELEVATION (B1)

SCALE: 1"=20'

GRAPHIC SCALE

1"=20' 20' 0 20' 40'

CHECK GRAPHIC SCALE BEFORE USING

SYM	DESCRIPTION	DATE	APPR
1	ADDENDA	7/27/16	DWH

NAVFAC

DONALD W. HARVIE CIVIL No. 31020 REGISTERED PROFESSIONAL ENGINEER STATE OF MAINE

3/7/16

SEAL

MN FST A JOINT VENTURE

A/E INFO

APPROVED

FOR COMMANDER NAVFAC

ACTIVITY: PER DOCUMENT FROM PNSY CODE 980, KITTERY ME

SATISFACTORY TO DATE: 05/09/16

DES DWH | DRW CHG | CHK DWH

PM/DM: NATHAN LIBBY

BRANCH MANAGER: NATHAN MAHER

FEAD/PM&E: AMIN BAHROUR

FIRE PROTECTION: N/A

DEPARTMENT OF THE NAVY
NAVAL FACILITIES ENGINEERING COMMAND
PUBLIC WORKS DEPARTMENT – MAINE
PORTSMOUTH NAVAL SHIPYARD

NAVAL FACILITIES ENGINEERING COMMAND ~ MID-ATLANTIC
NAVAL SHIPYARD – PORTSMOUTH, NH
KITTERY, MAINE

STRUCTURAL REPAIRS
AT BERTHS 11A, 11B AND 11C

BULKHEAD PLAN AND ELEVATION – SHEET 3 OF 3

EPROJECT NO.: 1356489

CONSTR. CONTR. NO. N40085-XX-C-XXXX

NAVFAC DRAWING NO. 12716067

SHEET 71 OF 144

S-106 | FP2-16-707

DRAWFORM REVISION: 10 OCTOBER 2014

FILE NAME: S:\1794\Active\179410203\TP-104A PNSY Lifting Study\TP-104A PNSY Lifting Study\02 CADD\08 Structural\FP2-16-707.dwg LAYOUT NAME: BULKHEAD PLAN AND ELEVATION – SHEET 3 OF 3 PLOTTED: Wednesday, July 27, 2016 – 7:40pm USER: cgoodridge

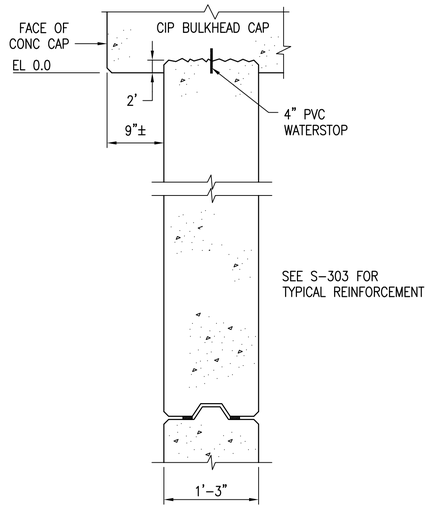

SECTION - TOP OF PANEL P1 (C1)
SCALE: 1" = 1'-0" S-303

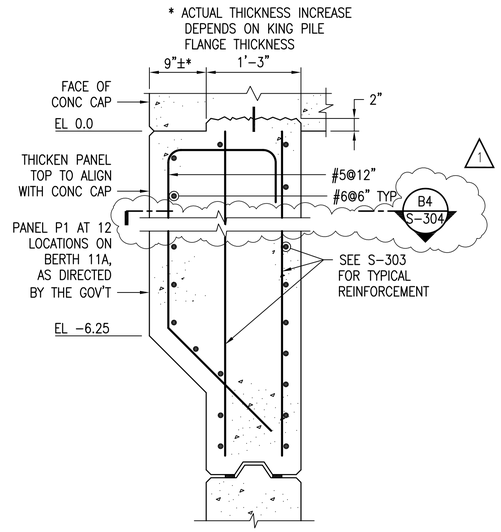

SECTION - TOP OF MODIFIED PANEL P1 (C2)
SCALE: 1" = 1'-0" S-303

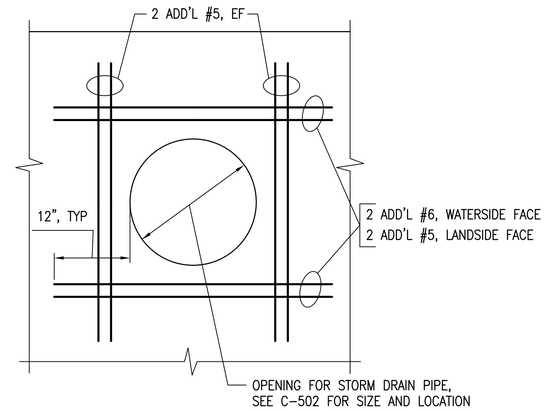

DETAIL - PANEL WITH STORM DRAIN OPENING (C4)
SCALE: 1" = 1'-0"

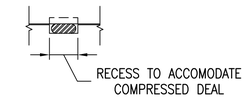

SECTION - RUBBER SEAL (D5)
NOT TO SCALE S-304

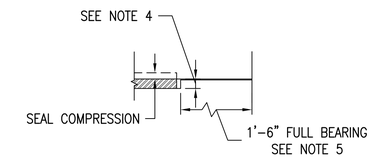

SECTION - RUBBER SEAL (C5)
NOT TO SCALE S-304

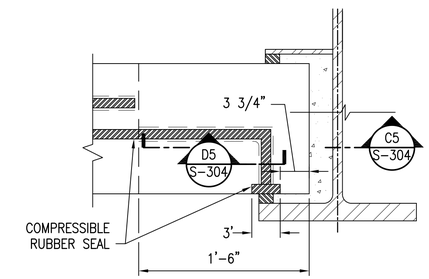

PLAN - BOTOM PANEL ENDS @ KING PILES (B5)
SCALE: 1-1/2" = 1'-0" S-303

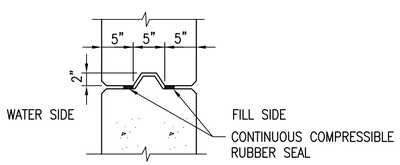

SECTION - INTERMEDIATE JOINT (B1)
SCALE: 1" = 1'-0" S-303

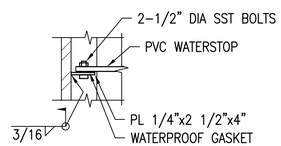

DETAIL (B2)
SCALE: 1-1/2" = 1'-0" S-304

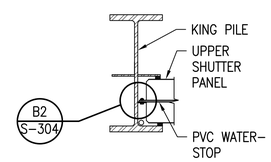

WATERSTOP TERMINATION (B3)
SCALE: 1/2" = 1'-0" S-304

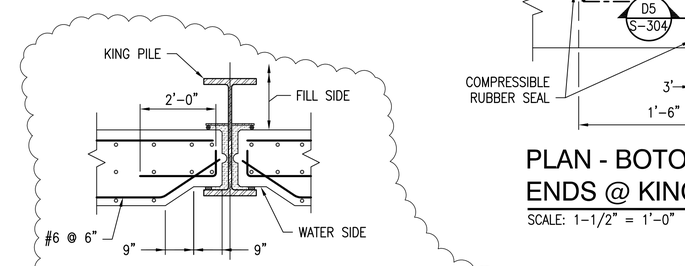

SECTION-MODIFIED PANEL P1 AT KING PILE (B4)
SCALE: 1/2" = 1'-0"

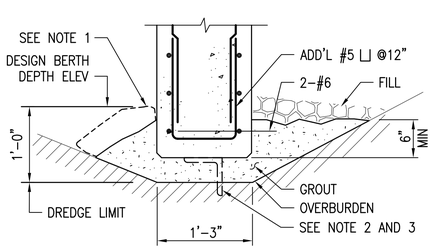

SECTION - BASE PANEL IN SOIL (A1)
SCALE: 1" = 1'-0" S-303

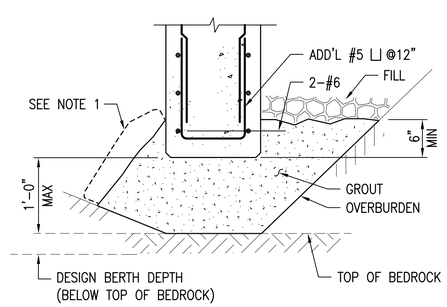

SECTION - BASE PANEL AT BEDROCK (A2)
SCALE: 1" = 1'-0" S-303

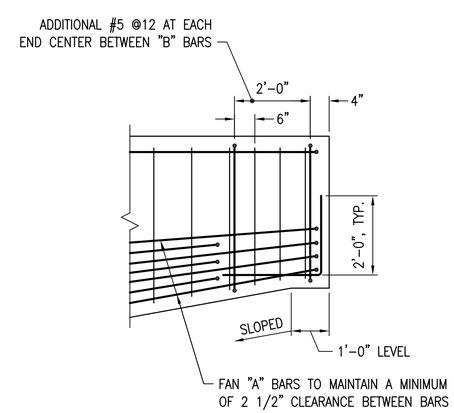

SECTION - PANEL P4 REINFORCEMENT (A4)
NOT TO SCALE S-303

NOTES:

1. THE CONTRACTOR SHALL PROVIDE A TEMPORARY CLOSURE ON WATER SIDE OF BASE PANEL PRIOR TO THE PLACING THE GROUT SEAL AT THE BASE OF WALL TO CONTAIN THE GROUT AND PREVENT PLUMES.
2. THE CONTRACTOR MAY PROVIDE AN ANGLE AT THE BASE OF THE PANEL TO CONTAIN THE GROUT. DETAILS SHALL BE SUBMITTED FOR REVIEW AND APPROVAL.
3. MODIFICATIONS TO THE SHAPE OF THE PANEL BASE TO ASSIST IN SEATING THE PANEL IN OVERBURDEN IF THE PANEL IS UTILIZED AS PART OF THE TEMPORARY SUPPORT OF EXCAVATION SYSTEM, SHALL BE SUBMITTED FOR REVIEW AND APPROVAL. MODIFICATIONS THAT REDUCE THE PANEL CAPACITY OR COULD RESULT IN DAMAGE TO THE SHUTTER PANEL ARE NOT PERMITTED.
4. PROVIDE RECESS FOR COMPRESSIBLE RUBBER SEAL WITHIN FULL BEARING AREA TO ACCOMMODATE SEAL MOVEMENT OF 30% WHEN UPPER PANEL IS SET.
5. DETAIL PRECAST PANELS TO ENSURE FULL BEARING AT PANEL END AND UNIFORM COMPRESSION AT THE RUBBER SEALS.

GRAPHIC SCALE

1 1/2"=1'-0" 1' 6" 0 1' 2' 9" 3"

1"=1'-0" 1' 6" 0 1' 3' 9" 3"

CHECK GRAPHIC SCALE BEFORE USING

SYM	DESCRIPTION	DATE	APPR
1	ADDENDA	7/27/16	DWH

NAVFAC

COMMONWEALTH OF MASSACHUSETTS DAVID J. MELO CIVIL No. 48692 REGISTERED PROFESSIONAL ENGINEER 3/7/16 SEAL

MNFST A JOINT VENTURE A/E INFO

APPROVED

FOR COMMANDER NAVFAC

ACTIVITY: PER DOCUMENT FROM PNSY CODE 980, KITTERY ME

SATISFACTORY TO DATE: 05/09/16

DES: DJM | DRW: RWT | CHK: DWH

PM/DM: NATHAN LIBBY

BRANCH MANAGER: NATHAN MAHER

FEAD/PM&E: AMIN BAHROUR

FIRE PROTECTION: N/A

DEPARTMENT OF THE NAVY
NAVAL FACILITIES ENGINEERING COMMAND
PUBLIC WORKS DEPARTMENT – MAINE
PORTSMOUTH NAVAL SHIPYARD

NAVAL FACILITIES ENGINEERING COMMAND
NAVAL SHIPYARD – PORTSMOUTH, NH
KITTERY, MAINE

STRUCTURAL REPAIRS
AT BERTHS 11A, 11B AND 11C

BULKHEAD SHUTTER PANELS SECTIONS & DETAILS – SHEET 2 OF 2

EPROJECT NO.: 1356489

CONSTR. CONTR. NO. N40085-XX-C-XXXX

NAVFAC DRAWING NO. 12716087

SHEET 91 OF 144

S-304 | FP2-16-727

DRAWFORM REVISION: 10 OCTOBER 2014

FILE NAME: S:\1794\Active\179410203\1TP-1044 PNSY Lifting Study\02 CADD\08 Structural\FP2-16-727.dwg LAYOUT NAME: BULKHEAD SHUTTER PANELS SECTIONS & DETAILS – SHEET 2 OF 2 PLOTTED: Wednesday, July 27, 2016 – 7:29pm USER: cgoodridge

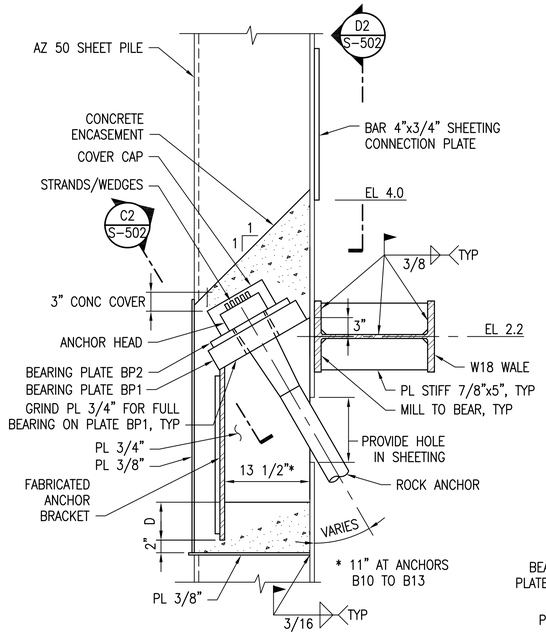

SECTION - WALE
SCALE: 1" = 1'-0" S-502 (C1)

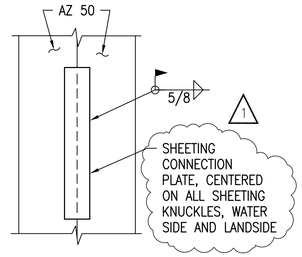

ELEVATION
SCALE: 1" = 1'-0" S-502 (D2)

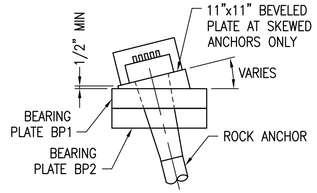

SECTION
SCALE: 1" = 1'-0" S-502 (C2)

NOTE:
THE BEARING PLATES AND ROCK ANCHOR NOT SHOWN FOR CLARITY

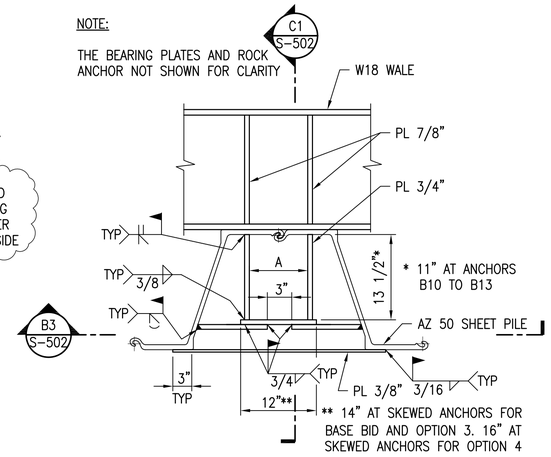

PLAN - SHEET PILE WALE ASSEMBLY
SCALE: 1" = 1'-0" S-502 (C3)

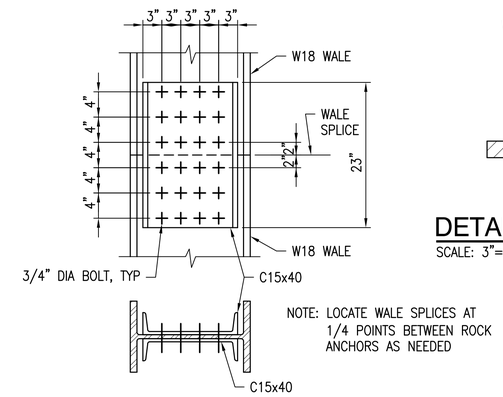

DETAIL - WALE SPLICE
SCALE: 1" = 1'-0" S-502 (C4)

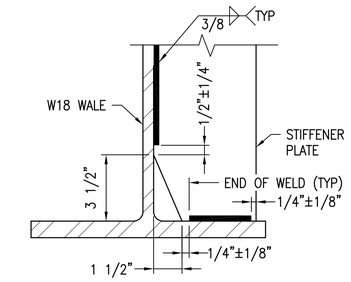

DETAIL - STIFFENER PLATE
SCALE: 3"=1'-0" S-502 (D5)

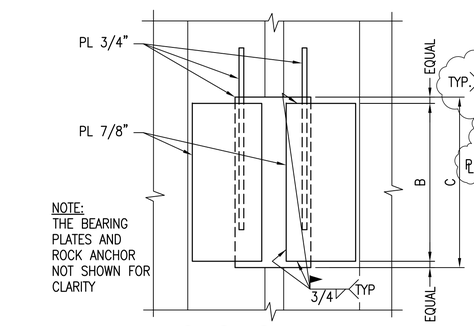

SECTION
SCALE: 1" = 1'-0" S-502 (B3)

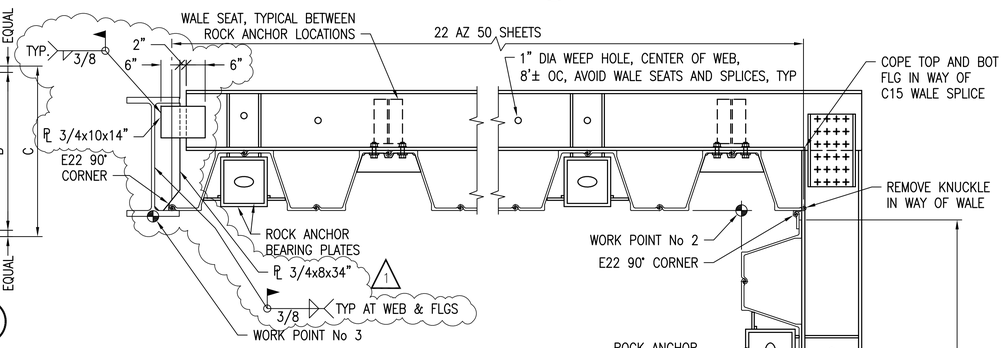

SHEET PILE BULKHEAD PLAN
SCALE: 1/2"=1'-0"

PLAN NORTH

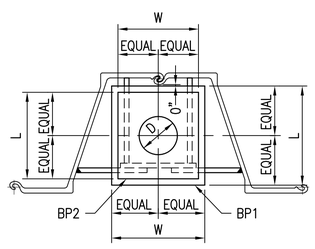

PLAN - BEARING PLATES
SCALE: 1" = 1'-0" S-502 (B1)

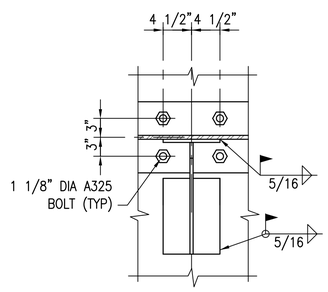

SECTION
SCALE: 1" = 1'-0" S-502 (B2)

		BASE BID AND OPTION 3	OPTION 4
	WALE SIZE	W18x119	W18x143
ANCHOR BRACKET PLATES	A	8 1/4"	9 1/4"
	B	2'-0"	2'-6"
	C	2'-2"	2'-8"
	D	8"	9"
BEARING PLATE BP1 AT 90° ANCHORS	W	11"	1'-0"
	L	1'-4"	1'-4"
	T	3 1/2"	4"
	D	7 1/2" MAX*	9" MAX*
BEARING PLATE BP2 AT 90° ANCHORS	W	N/A	11"
	L	N/A	1'-3"
	T	N/A	1"
	D	N/A	9" MAX*
BEARING PLATE BP1 AT SKEWED ANCHORS	W	11"	1'-0"
	L	1'-4"	1'-4"
	T	4"	4"
	D	7 1/2" MAX	9" MAX
BEARING PLATE BP2 AT SKEWED ANCHORS	W	N/A	1'-0"
	L	N/A	1'-4"
	T	N/A	3"
	D	N/A	9" MAX
SHEETING CONNECTION PLATE	W	4"	4"
	L	2'-0"	2'-5"
	T	3/4"	3/4"

* HOLE DIAMETER AS REQUIRED PER STRAND MANUFACTURER UP TO MAXIMUM DIAMETER SPECIFIED.

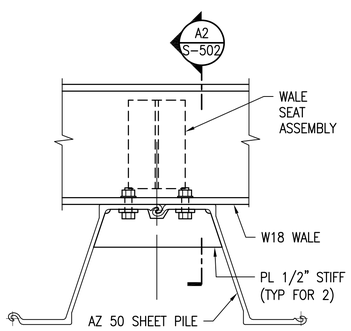

PLAN - WALE SEAT
SCALE: 1" = 1'-0" S-502 (A1)

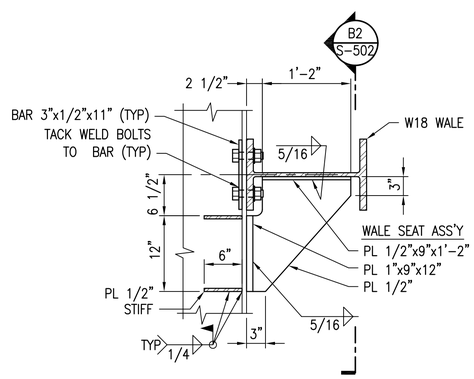

SECTION
SCALE: 1" = 1'-0" S-502 (A2)

GRAPHIC SCALE
1"=1'-0"
1' 6" 0 1' 3'
9" 3"
CHECK GRAPHIC SCALE BEFORE USING

SYM	DESCRIPTION	DATE	APPR
1	ADDENDA	7/27/16	DWH

NAVFAC

DONALD W. HARVIE CIVIL No. 31320 REGISTERED PROFESSIONAL ENGINEER STATE OF MAINE
3/7/16
SEAL

MN FST A JOINT VENTURE
A/E INFO

APPROVED
FOR COMMANDER NAVFAC
ACTIVITY: PER DOCUMENT FROM PNSY CODE 980, KITTERY ME
SATISFACTORY TO DATE: 05/09/16
DES SC DRW RWT CHK DWH
PM/DM: NATHAN LIBBY
BRANCH MANAGER: NATHAN MAHER
FEAD/PM&E: AMN BAHROUR
FIRE PROTECTION: N/A

DEPARTMENT OF THE NAVY
NAVAL FACILITIES ENGINEERING COMMAND
PUBLIC WORKS DEPARTMENT – MAINE
NAVAL FACILITIES ENGINEERING COMMAND ~ MID-ATLANTIC
NAVAL SHIPYARD – PORTSMOUTH, NH
PORTSMOUTH NAVAL SHIPYARD
KITTERY, MAINE
STRUCTURAL REPAIRS AT BERTHS 11A, 11B AND 11C
BULKHEAD WALE DETAILS – SHEET 2 OF 2

EPROJECT NO.: 1356489
CONSTR. CONTR. NO. N40085-XX-C-XXXX
NAVFAC DRAWING NO. 12716096
SHEET 100 OF 144
S-502 FP2-16-736
DRAWFORM REVISION: 10 OCTOBER 2014

FILE NAME: S:\1794\Active\179410203\TP-1044 PNSY Lifting Study\TP-1044 PNSY Lifting Study\02 CADD\08 Structural\FP2-16-736.dwg LAYOUT NAME: BULKHEAD WALE DETAILS – SHEET 2 OF 2 PLOTTED: Wednesday, July 27, 2016 – 7:29pm USER: cgoodridge

SHUTTER PANEL BULKHEAD WALE/ROCK ANCHOR SCHEDULE

LOCATION	WALE	ROCK ANCHORS					
KING PILE	TYPE	ANCHOR No	TYPE	HORZ ANGLE 'α'	ANCHOR LOCATION 'X' (FT)	ESTIMATED ROCK ELEVATION	TEST
NOT USED							
NOT USED							
3–4	3	A3	3	0°	9'–4 1/2"	–54	PROOF
4–5	2	A4	2	0°	3'–1 1/2"	–48	PROOF
5–6	2	A5	2	3°	3'–1 1/2"	–44	PROOF
6–7	2	A6	2	3°	3'–1 1/2"	–44	PROOF
7–8	1	A7	1	0°	3'–1 1/2"	–42	PROOF
8–9	1	A8	1	–3°	3'–1 1/2"	–42	PROOF
9–10	1	A9	1	6°	3'–1 1/2"	–42	PROOF
10–11	1	A10	1	4°	3'–1 1/2"	–42	PROOF
11–12	1	A11	1	–3°	3'–1 1/2"	–40	PROOF
12–13	1	A12	1	0	3'–1 1/2"	–40	PROOF
13–14	1	A13	1	0	3'–1 1/2"	–40	PROOF
14–15	1	A14	1	0	3'–1 1/2"	–38	PROOF
15–16	1	A15	1	0	3'–1 1/2"	–38	PROOF
16–17	1	A16	1	0	3'–1 1/2"	–38	PROOF
17–18	1	A17	1	–3°	3'–1 1/2"	–38	PROOF
18–19	1	A18	1	0	3'–1 1/2"	–38	PROOF
19–20	1	A19	1	0	3'–1 1/2"	–38	PROOF
20–21	1	A20	1	0	3'–1 1/2"	–38	PROOF
21–22	1	A21	1	0	3'–1 1/2"	–38	PROOF
22–23	1	A22	1	0	3'–1 1/2"	–38	PROOF
23–24	1	A23	1	0	3'–1 1/2"	–38	PROOF
24–25	1	A24	1	0	3'–1 1/2"	–38	PROOF
25–26	1	A25	1	0	3'–1 1/2"	–38	PROOF
26–27	1	A26	1	2°	3'–1 1/2"	–38	PROOF
27–28	1	A27	1	0	3'–1 1/2"	–38	PROOF
28–29	1	A28	1	0	3'–1 1/2"	–38	PROOF
29–30	1	A29	1	–2°	3'–1 1/2"	–38	PROOF
30–31	1	A30	1	0	3'–1 1/2"	–38	PROOF
31–32	1	A31	1	–2°	3'–1 1/2"	–38	PROOF
32–33	1	A32	1	0	3'–1 1/2"	–38	PERFORMANCE
33–34	1	A33	1	0	3'–1 1/2"	–38	PROOF
34–35	2	A34	2	0	3'–1 1/2"	–38	PROOF
35–36	2	A35	2	0	3'–1 1/2"	–38	PROOF
36–37	2	A36	2	0	3'–1 1/2"	–38	PROOF
37–38	2	A37	2	0°	3'–1 1/2"	–40	PROOF
38–39	2	A38	2	3°	3'–1 1/2"	–40	PROOF
39–40	2	A39	2	0	3'–1 1/2"	–40	PROOF
40–41	2	A40	2	6°	3'–1 1/2"	–40	PROOF
41–42	2	A41	2	0	3'–1 1/2"	–40	PROOF
42–43	2	A42	2	2°	3'–1 1/2"	–40	PROOF
43–44	2	A43	2	0	3'–1 1/2"	–40	PROOF
44–45	2	A44	2	0	3'–1 1/2"	–40	PROOF
45–46	2	A45	2	0	3'–1 1/2"	–40	PROOF
46–47	2	A46	2	0	3'–1 1/2"	–40	PROOF
47–48	2	A47	2	0	3'–1 1/2"	–40	PROOF
48–49	2	A48	2	3°	3'–1 1/2"	–40	PROOF
49–50	2	A49	2	0	3'–1 1/2"	–40	PROOF
50–51	2	A50	2	0	3'–1 1/2"	–40	PROOF
51–52	2	A51	2	0	3'–1 1/2"	–40	PROOF
52–53	2	A52	2	0	3'–1 1/2"	–44	PERFORMANCE
53–54	3	A53	3	–3°	3'–1 1/2"	–44	PROOF
54–55	3	A54	3	3°	3'–1 1/2"	–44	PROOF
55–56	3	A55	3	0	3'–1 1/2"	–44	PERFORMANCE
56–57	3	A56	3	0	3'–1 1/2"	–44	PROOF
57–58	3	A57	3	0	3'–1 1/2"	–44	PROOF
58–59	3	A58	3	0	3'–1 1/2"	–48	PROOF
59–60	3	A59	3	0	3'–1 1/2"	–48	PROOF

SHUTTER PANEL BULKHEAD WALE/ROCK ANCHOR SCHEDULE

LOCATION	WALE	ROCK ANCHORS					
KING PILE	TYPE	ANCHOR No	TYPE	HORZ. ANGLE 'α'	ANCHOR LOCATION 'X' (FT)	ESTIMATED ROCK ELEVATION	TEST
60–61	3	A60	3	0	3'–1 1/2"	–48	PROOF
61–62	3	A61	3	0	3'–1 1/2"	–48	PROOF
62–63	3	A62	3	0	3'–1 1/2"	–48	PROOF
63–64	3	A63	3	0	3'–1 1/2"	–48	PROOF
64–65	3	A64	3	0	3–1 1/2"	–48	PROOF
65–66	3	A65	3	0	3–1 1/2"	–48	PROOF
66–67	3	A66	3	–3°	3–1 1/2"	–48	PROOF
67–68	3	A67	3	0	3–1 1/2"	–44	PROOF
68–69	3	A68	3	0	3–1 1/2"	–44	PROOF
69–70	2	A69	2	6°	3–1 1/2"	–44	PROOF
70–71	2	A70	2	0	3–1 1/2"	–44	PROOF
71–72	2	A71	2	–3°	3–1 1/2"	–40	PROOF
72–73	2	A72	2	0	3–1 1/2"	–40	PROOF
73–74	2	A73	2	0	3–1 1/2"	–40	PROOF
74–75	2	A74	2	0	3–1 1/2"	–40	PROOF
75–76	2	A75	2	0	3–1 1/2"	–40	PROOF
76–77	2	A76	2	6°	3–1 1/2"	–40	PROOF
77–78	2	A77	2	0	3–1 1/2"	–40	PROOF
78–79	2	A78	2	0	3–1 1/2"	–40	PROOF
79–80	2	A79	2	0	3–1 1/2"	–40	PROOF
80–81	2	A80	2	0	3–1 1/2"	–40	PROOF
81–82	2	A81	2	0	3–1 1/2"	–42	PROOF
82–83	2	A82	2	0	3–1 1/2"	–42	PROOF
83–84	2	A83	2	0	3–1 1/2"	–42	PROOF
84–85	2	A84	2	0	3–1 1/2"	–42	PROOF
85–86	2	A85	2	0	3–1 1/2"	–45	PROOF
86–87	3	A86	3	0	3–1 1/2"	–45	PROOF
87–88	3	A87	3	0	3–1 1/2"	–45	PROOF
88–89	3	A88	3	5°	3–1 1/2"	–45	PROOF
89–90	3	A89	3	13°	3–1 1/2"	–45	PROOF
90–91	3	A90	3	14°	3–1 1/2"	–45	PROOF
91–92	3	A91	3	2°	3–1 1/2"	–48	PROOF
92–93	3	A92	3	–1°	3–1 1/2"	–48	PROOF

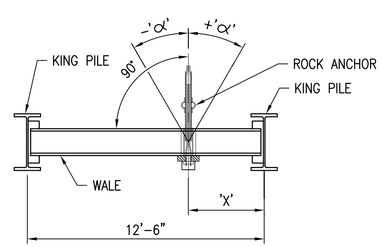

SCHEMATIC PLAN

SCALE: 1/4"=1'–0"

ROCK ANCHOR TABLE

TYPE	DESIGN LOADS (KIPS)	No. OF STRANDS	VERTICAL ANGLE 'β'	BOND LENGTH 'L' (FT)
1	310	9	45°	26
2	340	10	45°	28
3	390	12	45°	33
4	480	14	SEE SCHEDULE BELOW	38
5	590	17	SEE SCHEDULE BELOW	46

STEEL SHEET PILE BULKHEAD ROCK ANCHOR SCHEDULE

ANOCHOR No	TYPE	HORZ. ANGLE 'α'	VERTICAL ANGLE 'β'	ESTIMATED ROCK ELEVATION	TEST
B1	4*	0°	67°	–76	PROOF
B2	4*	–3°	67°	–78	PROOF
B3	4*	4°	62°	–78	PROOF
B4	4*	0°	62°	–78	PEFORMANCE
B5	4*	0°	60°	–78	PROOF
B6	4*	0°	60°	–78	PROOF
B7	4*	0°	60°	–78	PROOF
B8	4*	0°	60°	–78	PROOF
B9	4*	8°	62°	–76	PROOF
B10	2**	3°	45°	–58	PROOF
B11	2**	3°	45°	–54	PROOF
B12	2**	2°	45°	–54	PROOF
B13	2**	2°	45°	–54	PROOF

* USE TYPE 5 ANCHORS FOR BID OPTION 4, ANCHORS B1 THRU B9
** USE TYPE 3 ANCHORS FOR BID OPTION 4, ANCHORS B10 THRU B13 (1)

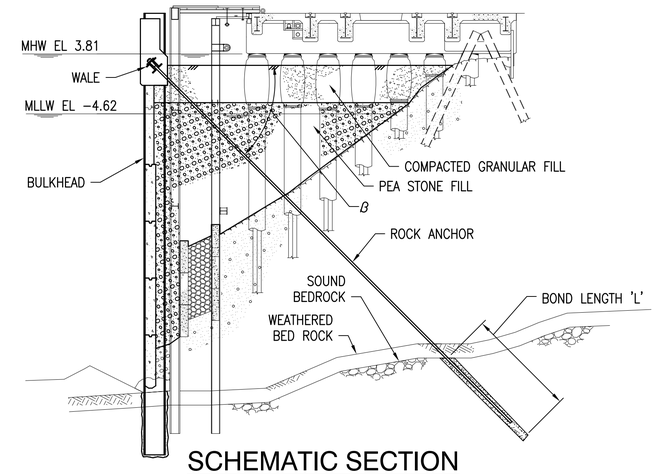

SCHEMATIC SECTION

SCALE: 3/32" = 1'–0"

NOTES:

1. ALL ROCK ANCHOR DRILL HOLES SHALL BE 6" DIAMETER.
2. THE FIRST PRODUCTION ANCHOR SHALL BE PERFORMANCE TESTED.
3. PERFORMANCE AND PROOF TEST LOADS SHALL BE 1.33 x DESIGN LOAD.

GRAPHIC SCALE

3/32"=1'–0" 4' 0 4' 8' 12' 16' 32'

CHECK GRAPHIC SCALE BEFORE USING

SYM	DESCRIPTION	DATE	APPR
1	ADDENDA	7/27/16	KAK

NAVFAC

DONALD W. HARVIE CIVIL No. 31320 REGISTERED PROFESSIONAL ENGINEER MAINE
3/7/16
SEAL

MN FST A JOINT VENTURE
A/E INFO

APPROVED
FOR COMMANDER NAVFAC

ACTIVITY:
PER DOCUMENT FROM PNSY CODE 980, KITTERY ME

SATISFACTORY TO DATE: 05/09/16

DES MAB DRW FC CHK DWH
PM/DM: NATHAN LIBBY
BRANCH MANAGER: NATHAN MAHER
FEAD/PM&E: AMIN BAHROUR
FIRE PROTECTION: N/A

DEPARTMENT OF THE NAVY
NAVAL FACILITIES ENGINEERING COMMAND
PUBLIC WORKS DEPARTMENT – MAINE
PORTSMOUTH NAVAL SHIPYARD

NAVAL FACILITIES ENGINEERING COMMAND ~ MID-ATLANTIC
NAVAL SHIPYARD ~ PORTSMOUTH, NH

STRUCTURAL REPAIRS AT BERTHS 11A, 11B AND 11C
KITTERY, MAINE

WALE & ANCHOR SCHEDULE

EPROJECT NO.: 1356489
CONSTR. CONTR. NO. N40085–XX–C–XXXX
NAVFAC DRAWING NO. 12716120
SHEET 124 OF 144
S-608 FP2-16-760

DRAWFORM REVISION: 10 OCTOBER 2014

FILE NAME: S:\1794\Active\179410203\Y\TP-1044 PNSY Lifting Study\TP-1044 PNSY Lifting Study\02 CADD\08 Structural\FP2-16-760.dwg LAYOUT NAME: WALE & ANCHOR SCHEDULE PLOTTED: Wednesday, July 27, 2016 – 7:30pm USER: cpoodridge