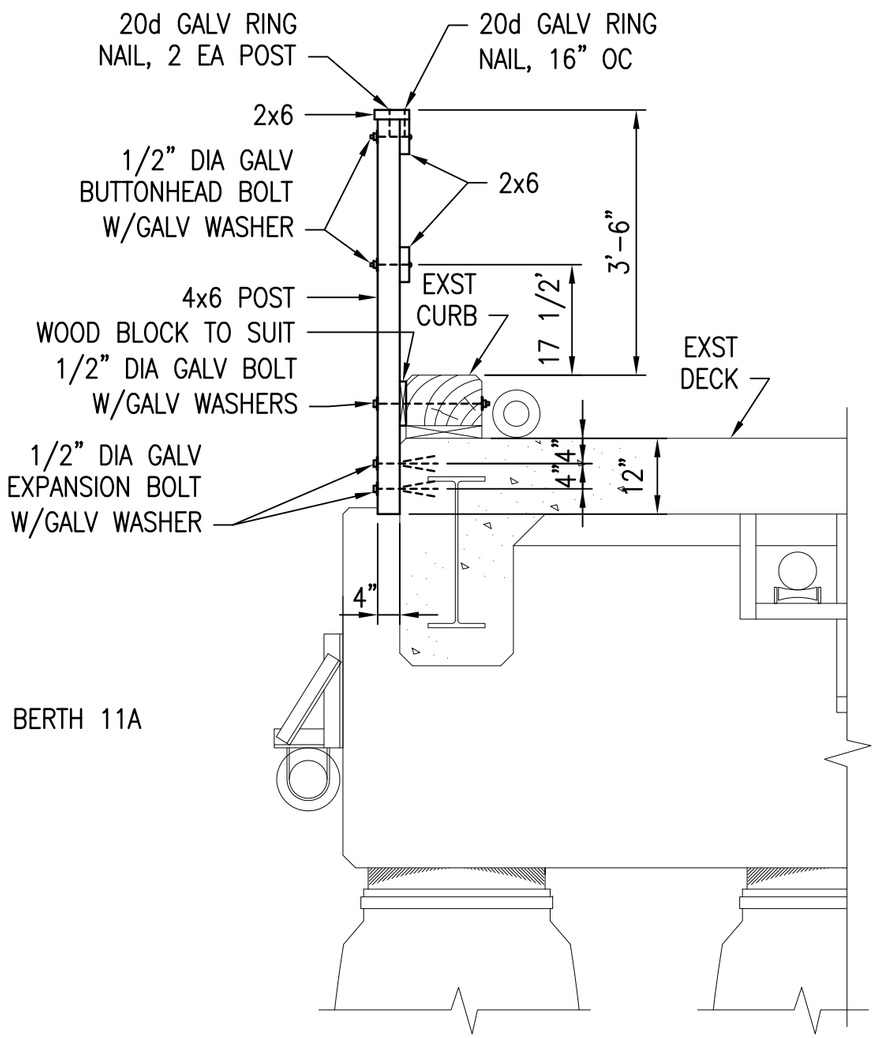

SECTION 1
SCALE: 1/2"=1'-0"

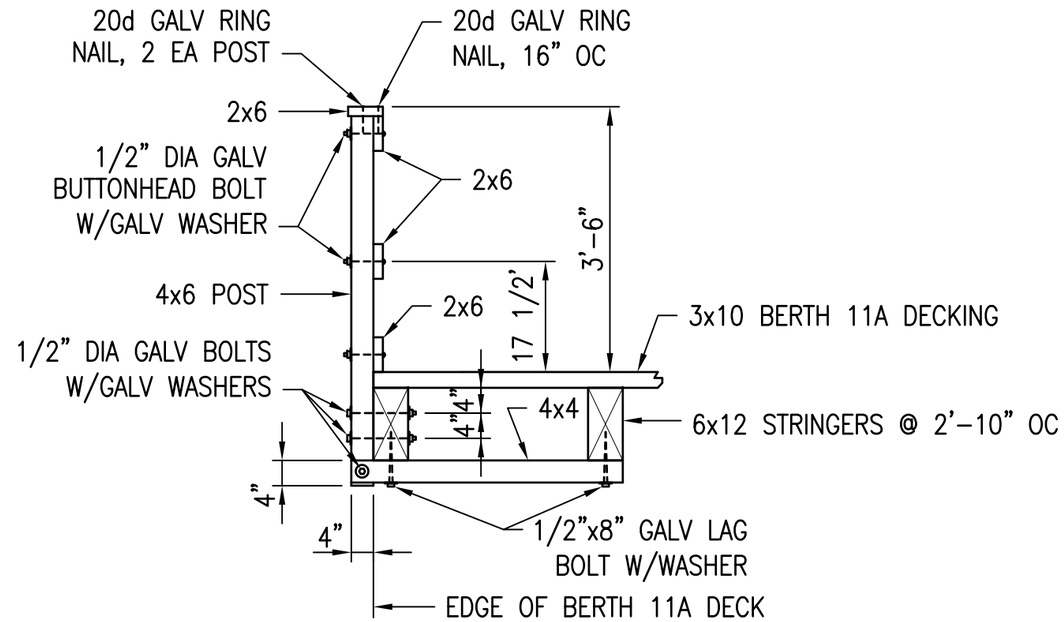

SECTION 2
SCALE: 1/2"=1'-0"

DRAFT

SEPT 27, 2016

PORTSMOUTH NAVAL SHIPYARD KITTERY, MAINE
STRUCTURAL REPAIRS
AT BERTHS 11A, 11B AND 11C
SKETCH SK-S-310

FILE NAME: C:\Users\rtripp\Documents\S-SC-EX-BERTH 11A RAILING.dwg LAYOUT NAME: Layout2 PLOTTED: Tuesday, September 27, 2016 - 12:03pm USER: rtripp