PORTSMOUTH NAVAL SHIPYARD
KITTERY, ME

DRYDOCK #1 DEFUELING COMPLEX
VOLUME 3: DRE-7
CONTRACT NO. N40085-17-C-5002

LIST OF VOLUMES	
VOLUME:	TITLE:
1	SITE & FOUNDATIONS
2	M-140 COMPLEX
3	DRE-7
4	RAE-4 & RAE-SP-6
5	ACE-3
6	PASSAGEWAYS

SYM	DESCRIPTION	DATE	APPR
0	ISSUED FOR CONSTRUCTION	10/28/2016	CBC

DRAWING INDEX

DRAWING	TITLE	SHEET NUMBER
G-001	TITLE SHEET	1 OF 117
GA-100	GENERAL ARRANGEMENT GROUND LEVEL PLAN (NO STORAGE ANNEX)	2 OF 117
GA-100A	GENERAL ARRANGEMENT – GROUND LEVEL PLAN	3 OF 117
GA-101	GENERAL ARRANGEMENT LOWER ROOF PLAN (NO STORAGE ANNEX)	4 OF 117
GA-101A	GENERAL ARRANGEMENT – LOWER ROOF PLAN	5 OF 117
GA-102	GENERAL ARRANGEMENT – CRANE LEVEL PLAN	6 OF 117
GA-301	BUILDING SECTION WITH BRIDGE CRANE	7 OF 117
GA-901	GENERAL ARRANGEMENT RENDERINGS (NO STORAGE ANNEX)	8 OF 117
GA-901A	GENERAL ARRANGEMENT – RENDERINGS	9 OF 117
LS-001	LIFE SAFETY ABBREVIATIONS AND GENERAL NOTES	10 OF 117
LS-100	GROUND LEVEL LIFE SAFETY PLAN (NO STORAGE ANNEX)	11 OF 117
LS-100A	GROUND LEVEL LIFE SAFETY PLAN	12 OF 117
LS-101	CRANE LEVEL LIFE SAFETY PLAN	13 OF 117
S-001	STRUCTURAL GENERAL NOTES SHEET	14 OF 117
S-101	FRAMING PLAN AT LEVEL 1 (NO STORAGE ANNEX)	15 OF 117
S-101A	FRAMING PLAN AT LEVEL 1	16 OF 117
S-102	FRAMING PLAN AT LEVEL 2	17 OF 117
S-103	FRAMING PLAN AT LEVEL 3	18 OF 117
S-104	FRAMING PLAN AT CRANE RAIL	19 OF 117
S-105	FRAMING PLAN AT TOP OF ENCLOSURE	20 OF 117
S-106	FRAMING PLAN AT B.O. MOVABLE ROOF	21 OF 117
S-107	FRAMING PLAN AT T.O. MOVABLE ROOF	22 OF 117
S-201	EXTERIOR FRAMING ELEVATION AT COLUMN LINE 1 (NO STORAGE ANNEX)	23 OF 117
S-201A	EXTERIOR FRAMING ELEVATION AT COLUMN LINE 1	24 OF 117
S-202	EXTERIOR FRAMING ELEVATION AT COLUMN LINE 3 (NO STORAGE ANNEX)	25 OF 117
S-202A	EXTERIOR FRAMING ELEVATION AT COLUMN LINE 3	26 OF 117
S-203	EXTERIOR FRAMING LINE ELEVATIONS AT COLUMN LINES A AND C (NO STORAGE ANNEX)	27 OF 117
S-203A	EXTERIOR FRAMING ELEVATIONS AT COLUMN LINES A AND C	28 OF 117
S-204	EXTERIOR FRAMING ELEVATION AT COLUMN LINE E	29 OF 117
S-205	EXTERIOR FRAMING ELEVATIONS AT PASSAGEWAY (NO STORAGE ANNEX)	30 OF 117
S-205A	EXTERIOR FRAMING ELEVATIONS AT ISO CONTAINER AND PASSAGEWAY	31 OF 117
S-211	INTERIOR FRAMING ELEVATION AT COLUMN LINE 1 (NO STORAGE ANNEX)	32 OF 117
S-211A	INTERIOR FRAMING ELEVATION AT COLUMN LINE 1	33 OF 117
S-212	INTERIOR FRAMING ELEVATION AT COLUMN LINE 3 (NO STORAGE ANNEX)	34 OF 117
S-212A	INTERIOR FRAMING ELEVATION AT COLUMN LINE 3	35 OF 117
S-213	INTERIOR FRAMING LINE ELEVATIONS AT COLUMN LINES A AND C (NO STORAGE ANNEX)	36 OF 117
S-213A	INTERIOR FRAMING ELEVATIONS AT COLUMN LINES A AND C	37 OF 117
S-214	INTERIOR FRAMING ELEVATION AT COLUMN LINE E	38 OF 117
S-401	PARTIAL FRAMING PLANS (NO STORAGE ANNEX)	39 OF 117
S-401A	PARTIAL FRAMING PLANS	40 OF 117
S-501	TYPICAL STEEL DETAILS	41 OF 117
S-502	TYPICAL BRACING CONNECTION DETAILS	42 OF 117
S-503	CRANE RAIL DETAILS	43 OF 117
S-504	MOVABLE ROOF DETAILS	44 OF 117
S-505	MOVABLE ROOF DETAILS	45 OF 117
S-506	GIRT CONNECTION DETAILS	46 OF 117
S-507	TYPICAL DETAILS	47 OF 117
S-508	LADDER DETAILS	48 OF 117
S-509	STRUCTURAL SECTIONS AND DETAILS	49 OF 117
S-510	STRUCTURAL SECTIONS AND DETAILS	50 OF 117
S-511	PANEL ATTACHMENTS	51 OF 117
S-512	MISCELLANEOUS DETAILS	52 OF 117
S-513	STRUCTURAL SECTIONS AND DETAILS	53 OF 117
S-514	STRUCTURAL SECTIONS & DETAILS	54 OF 117
S-515	TYPICAL GIRT SECTIONS AND DETAILS	55 OF 117
S-600	COLUMN SCHEDULE	56 OF 117
S-600A	COLUMN SCHEDULE	57 OF 117
A-001	ARCHITECTURAL LEGEND, ABBREVIATIONS AND GENERAL NOTES	58 OF 117
A-100	GROUND LEVEL PLAN (EL. 0'-0") (NO STORAGE ANNEX)	59 OF 117
A-100A	GROUND LEVEL PLAN (EL. 0'-0")	60 OF 117
A-101	LOWER ROOF PLAN (EL. 0'-0") (NO STORAGE ANNEX)	61 OF 117
A-101A	LOWER ROOF PLAN (EL. 15'-4 1/2")	62 OF 117
A-102	CRANE LEVEL PLAN (EL. 48'-8 5/8")	63 OF 117
A-103	UPPER ROOF PLAN	64 OF 117
A-201	BUILDING ELEVATIONS (NO STORAGE ANNEX)	65 OF 117
A-201A	BUILDING ELEVATIONS	66 OF 117
A-202	BUILDING ELEVATIONS (NO STORAGE ANNEX)	67 OF 117
A-202A	BUILDING SECTIONS	68 OF 117
A-301	BUILDING SECTION (NO STORAGE ANNEX)	69 OF 117
A-301A	BUILDING SECTIONS	70 OF 117
A-302	BUILDING SECTIONS	71 OF 117
A-303	WALL SECTIONS	72 OF 117
A-501	WALL DETAILS	73 OF 117
A-502	ARCHITECTURAL DETAILS	74 OF 117
A-503	ROOF DETAILS	75 OF 117
A-504	ROOF DETAILS	76 OF 117
A-505	WALL DETAILS	77 OF 117
A-506	PENETRATION DETAILS	78 OF 117

DRAWING INDEX

DRAWING	TITLE	SHEET NUMBER
A-507	PENETRATION DETAILS	79 OF 117
A-601	ROOM FINISH AND DOOR SCHEDULES	80 OF 117
A-602	DOOR DETAILS	81 OF 117
A-603	DOOR DETAILS	82 OF 117
FA-001	FIRE ALARM LEGEND, ABBREVIATIONS AND GENERAL NOTES	83 OF 117
FA-100	GROUND LEVEL FIRE ALARM PLAN (NO STORAGE ANNEX)	84 OF 117
FA-100A	GROUND LEVEL FIRE ALARM PLAN	85 OF 117
FA-101	CRANE LEVEL FIRE ALARM PLAN	86 OF 117
M-001	MECHANICAL LEGEND, ABBREVIATIONS AND GENERAL NOTES	87 OF 117
M-100	GROUND LEVEL MECHANICAL PLAN (NO STORAGE ANNEX)	88 OF 117
M-100A	GROUND LEVEL MECHANICAL PLAN	89 OF 117
M-101	LOWER ROOF MECHANICAL PLAN (NO STORAGE ANNEX)	90 OF 117
M-102	BOTTOM OF ROOF MECHANICAL PLAN	91 OF 117
M-201	MECHANICAL ELEVATIONS	92 OF 117
M-501	MECHANICAL DETAILS	93 OF 117
M-502	MECHANICAL DETAILS	94 OF 117
M-503	MECHANICAL DETAILS	95 OF 117
M-504	AIRFLOW SCHEMATIC	96 OF 117
M-505	VENTILATION SKID	97 OF 117
M-601	MECHANICAL SCHEDULES	98 OF 117
E-001	ELECTRICAL LEGEND, ABBREVIATIONS AND GENERAL NOTES	99 OF 117
EP-100	GROUND LEVEL POWER AND SYSTEMS PLAN (NO STORAGE ANNEX)	100 OF 117
EP-100A	GROUND LEVEL POWER AND SYSTEMS PLAN	101 OF 117
EP-101	LOWER ROOF POWER AND SYSTEMS PLAN	102 OF 117
EP-102	CRANE LEVEL POWER AND SYSTEMS PLAN	103 OF 117
EL-100	GROUND LEVEL LIGHTING PLAN (NO STORAGE ANNEX)	104 OF 117
EL-100A	GROUND LEVEL LIGHTING PLAN	105 OF 117
EL-101	LOWER ROOF LIGHTING PLAN	106 OF 117
EL-102	CRANE LEVEL LIGHTING PLAN	107 OF 117
E-201	ELECTRICAL LIGHTING ELEVATIONS	108 OF 117
E-501	ELECTRICAL ONE-LINE DIAGRAM	109 OF 117
E-502	PHONE SYSTEM RISER DIAGRAM	110 OF 117
E-503	ELECTRICAL SCHEMATICS	111 OF 117
E-504	ELECTRICAL DETAILS	112 OF 117
E-601	ELECTRICAL SCHEDULES	113 OF 117
IC-101	LOCAL CONTROL SYSTEM NETWORK AND POINTS LIST	114 OF 117
IC-200	LOCAL CONTROL PANEL EXTERIOR	115 OF 117
IC-201	CONTROL PANEL SCREEN LAYOUTS	116 OF 117
IC-202	CONTROL PANEL TROUBLE SHOOTING SCREEN LAYOUTS	117 OF 117

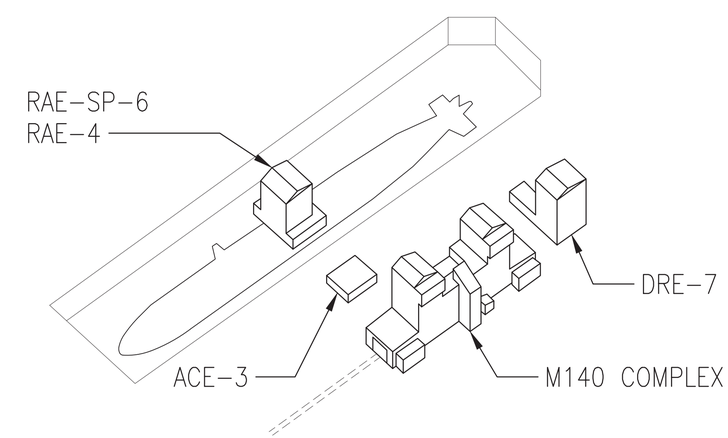

DD#1 SITE ISO DIAGRAM
SCALE: NTS

PLAN NORTH

STATE OF MAINE
CALEN B. COLBY
No. 6384
LICENSED PROFESSIONAL ENGINEER
10/28/16

Colby Company engineering

APPROVED
Daniel W. Greenfield
FOR COMMANDER NAVFAC

ACTIVITY: TIM FISHER
C. 2370.6 BRANCH HEAD

SATISFACTORY TO DATE 10/28/2016
DES BCT DRW BVD CHK CBC
PM/DM PETER STOCKLESS
BRANCH MANAGER IAN BODWELL
FEAD/PM&E AMIN BAHROUR
FIRE PROTECTION PATRICK BAKAJ

DEPARTMENT OF THE NAVY
NAVAL FACILITIES ENGINEERING COMMAND
PUBLIC WORKS DEPARTMENT - MAINE
NAVAL FACILITIES ENGINEERING COMMAND ~ MID-ATLANTIC
NAVAL SHIPYARD - PORTSMOUTH, NH
PORTSMOUTH NAVAL SHIPYARD
KITTERY, ME
DRY DOCK #1 DEFUELING COMPLEX
DRE-7
TITLE SHEET

EPROJECT NO.: 1363311
CONSTR. CONTR. NO. N40085-17-C-5002
NAVFAC DRAWING NO. 12734972
SHEET 1 OF 117
G-001 DD1-16-1053

DRAWFORM REVISION: 10 OCTOBER 2014

10/28/2016 6:55:28 AM X:\297 PORTSMOUTH NAVAL SHIPYARD\297.005.001 - DD#1 DEFUELING COMPLEX DESIGN\DRAWINGS\DRE7\SHEETS\G-001.DWG

BASE BID DRE-7 SUMMARY

1. THE BASE BID DOES NOT INCLUDE THE STORAGE ANNEX COMPONENT OF DRE–7.
2. MODIFICATIONS FROM THE BID OPTION WITH THE STORAGE ANNEX INCLUDE THE FOLLOWING:
   1) STORAGE ANNEX NOT INCLUDED
   2) RELOCATION OF ENTRANCE FROM THE ACE TO NORTH
   3) PASSAGEWAY MODIFICATION FROM ACE TO ACCOMPANY ENTRANCE RELOCATION

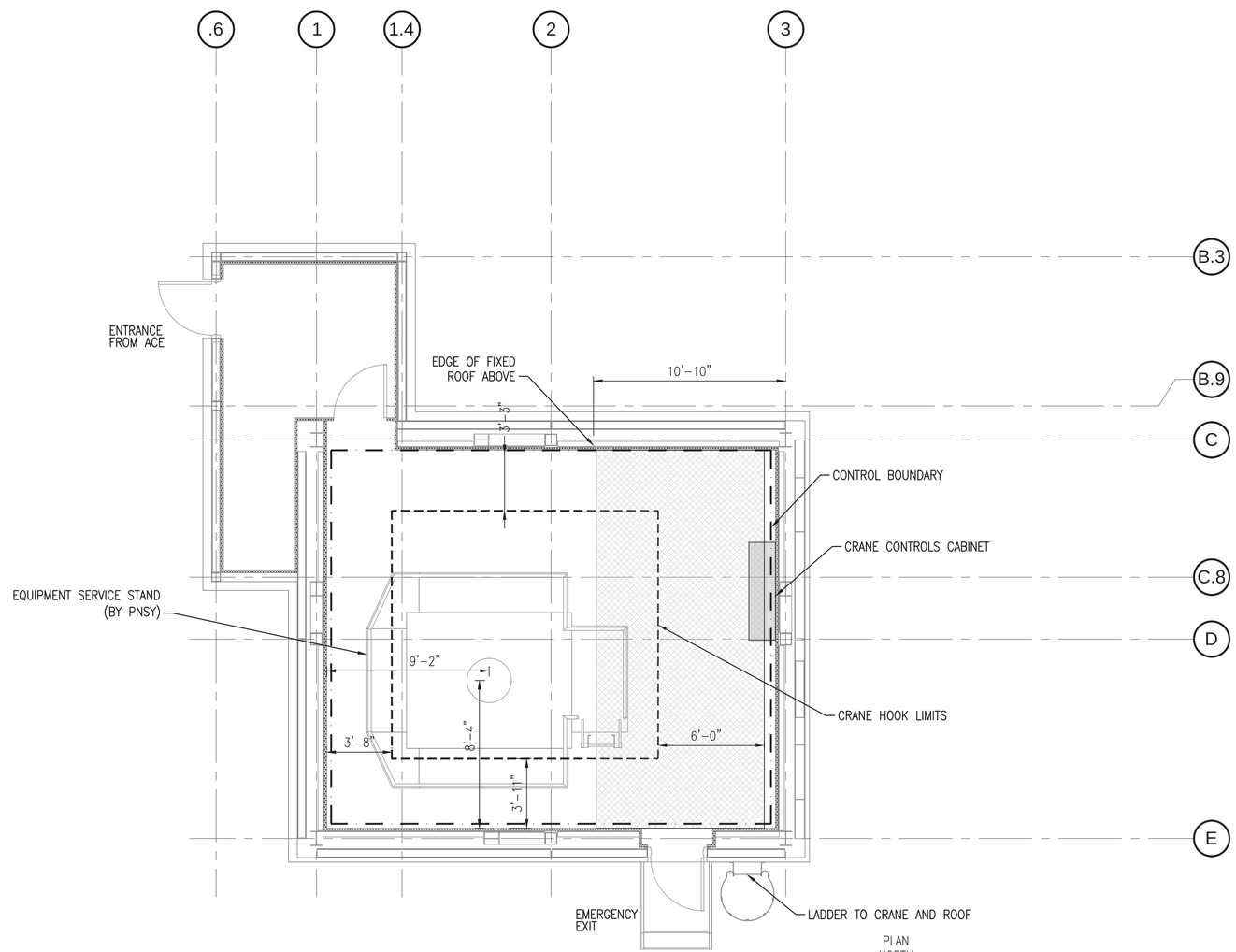

GENERAL ARRANGEMENT GROUND LEVEL PLAN (NO STORAGE ANNEX)

SCALE: 1/4" = 1'–0"

0 2' 4' 8'
Scale: 1/4" = 1'–0"

NOTES

1. THE INTENT OF THE GENERAL ARRANGEMENT DRAWINGS IS TO SHOW GENERAL REQUIREMENTS AND USAGE OF THE ENCLOSURE. THE EQUIPMENT IS SHOWN IN THE DRAWINGS FOR COORDINATION WITH OTHER TRADES AS WELL AS OVERALL CONTRACTOR COORDINATION. THESE LOCATIONS ARE PROVIDED FOR SYSTEM/BUILDING INSTALLATION TO ENSURE NO INTERFERENCES AND CONFLICTS EXIST WITH THE FUTURE SHIPYARD EQUIPMENT.
2. AREAS WITHIN CONTROL BOUNDARIES WILL BE USED FOR RADIOLOGICAL PURPOSES AND SHALL BE CONSTRUCTED SO AS TO MINIMIZE CRACKS AND CREVICES. IN addition, THESE AREAS SHALL BE CONSTRUCTED WITH CLEANLINESS AND CAPTIVATION IN MIND, WITH SELF–LOCKING FASTENERS USED AS MUCH AS PRACTICAL. THE CONTROL BOUNDARY SHALL BE AIR TIGHT TO MAINTAIN NEGATIVE DP WITHIN THE AREA.
3. THIS DRAWING HIGHLIGHTS THE BASE BID AND ITEMS THAT DIFFER FROM THE BID OPTION WITH THE STORAGE ANNEX INCLUDED.

SYM	DESCRIPTION	DATE	APPR
0	ISSUED FOR CONSTRUCTION	10/28/2016	CBC

STATE OF MAINE
BENJAMIN C. TOWNSEND
No. 13287
LICENSED
PROFESSIONAL ENGINEER
10/28/16
SEAL

Colby Company engineering
A/E INFO

APPROVED
Daniel W. Greenfield
FOR COMMANDER NAVFAC

ACTIVITY
TIM FISHER
C. 2370.6 BRANCH HEAD

SATISFACTORY TO DATE 10/28/2016
DES BCT DRW ERB CHK BCT
PMDM PETER STOCKLESS
BRANCH MANAGER IAN BODWELL
FEA/DPM&E AMIN BAHROUR
FIRE PROTECTION PATRICK BAKAJ

DEPARTMENT OF THE NAVY
NAVAL FACILITIES ENGINEERING COMMAND
PUBLIC WORKS DEPARTMENT - MAINE
NAVAL FACILITIES ENGINEERING COMMAND ~ MID-ATLANTIC
NAVAL SHIPYARD - PORTSMOUTH, NH
PORTSMOUTH NAVAL SHIPYARD
KITTERY, ME
DRY DOCK #1 DEFUELING COMPLEX
DRE-7
GENERAL ARRANGEMENT GROUND LEVEL PLAN (NO STORAGE ANNEX)

EPROJECT NO.: 1363311
CONSTR. CONTR. NO. N40085-17-C-5002
NAVFAC DRAWING NO. 12734973
SHEET 2 OF 117
GA-100 | DD1-16-1054

DRAWFORM REVISION: 10 OCTOBER 2014

10/28/2016 6:55:33 AM X:\297 PORTSMOUTH NAVAL SHIPYARD\297.005.001 - DD#1 DEFUELING COMPLEX DESIGN\DRAWINGS\DRE7\SHEETS\GA-100.DWG

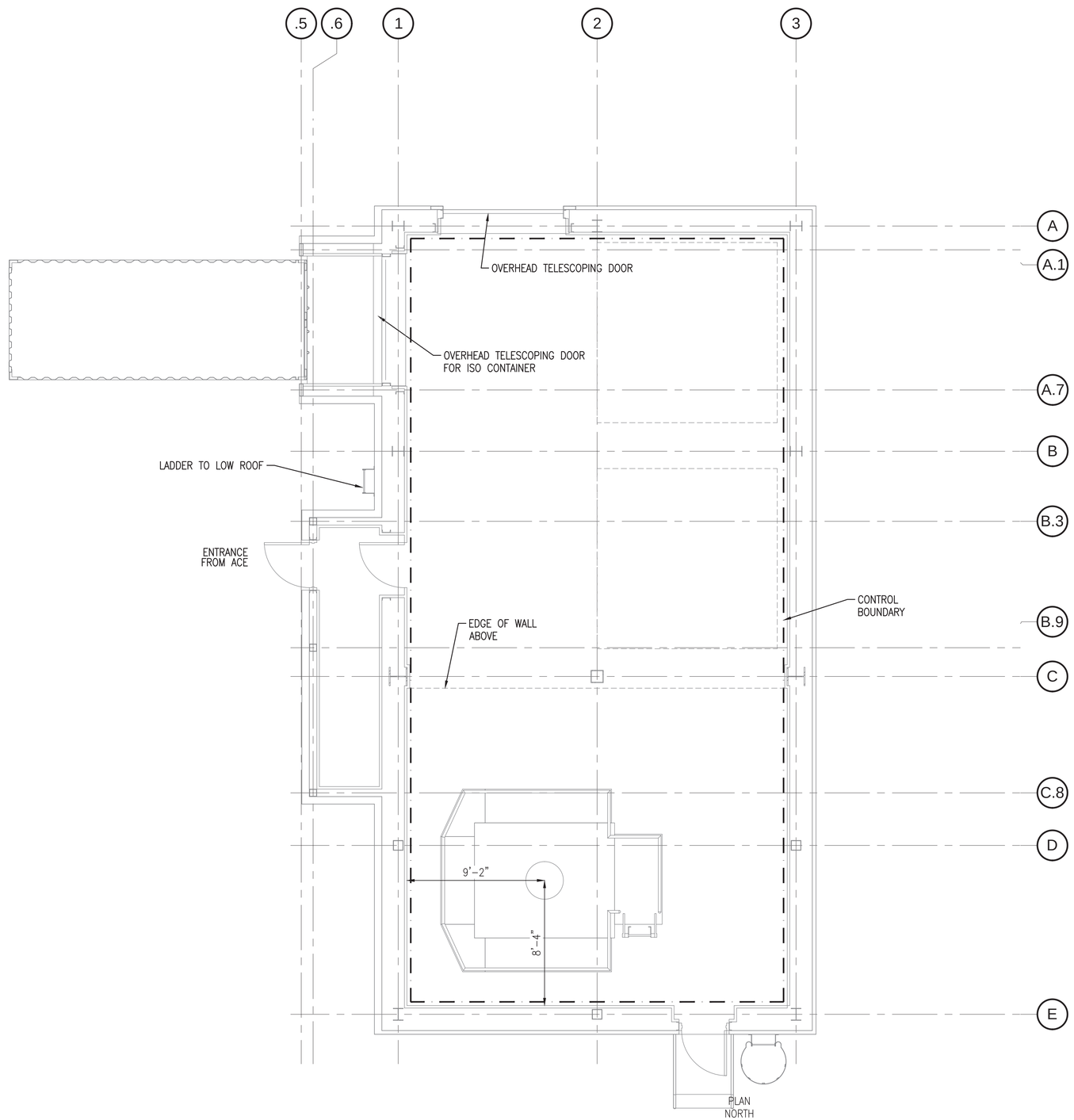

GENERAL ARRANGEMENT - GROUND LEVEL PLAN

SCALE: 1/4" = 1'-0"

NOTES

1. THE INTENT OF THE GENERAL ARRANGEMENT DRAWINGS IS TO SHOW GENERAL REQUIREMENTS AND USAGE OF THE ENCLOSURE. THE EQUIPMENT IS SHOWN IN THE DRAWINGS FOR COORDINATION WITH OTHER TRADES AS WELL AS OVERALL CONTRACTOR COORDINATION. THESE LOCATIONS ARE PROVIDED FOR SYSTEM/BUILDING INSTALLATION TO ENSURE NO INTERFERENCES AND CONFLICTS EXIST WITH THE FUTURE SHIPYARD EQUIPMENT.
2. AREAS WITHIN CONTROL BOUNDARIES WILL BE USED FOR RADIOLOGICAL PURPOSES AND SHALL BE CONSTRUCTED SO AS TO MINIMIZE CRACKS AND CREVICES. IN ADDITION, THESE AREAS SHALL BE CONSTRUCTED WITH CLEANLINESS AND CAPTIVATION IN MIND, WITH SELF-LOCKING FASTENERS USED AS MUCH AS PRACTICAL. THE CONTROL BOUNDARY SHALL BE AIR TIGHT TO MAINTAIN NEGATIVE DP WITHIN THE AREA.

Scale: 1/4" = 1'-0"

SYM	DESCRIPTION	DATE	APPR
0	ISSUED FOR CONSTRUCTION	10/28/2016	CBC

NAVFAC

STATE OF MAINE
BENJAMIN C. TOWNSEND
No.13287
LICENSED
PROFESSIONAL ENGINEER
10/28/16
SEAL

Colby Company engineering
A/E INFO

APPROVED
Daniel W. Greenfield
FOR COMMANDER NAVFAC

ACTIVITY
TIM FISHER
C. 2370.6 BRANCH HEAD

SATISFACTORY TO DATE 10/28/2016

DES BCT | DRW ERB | CHK BCT

PMDM PETER STOCKLESS
BRANCH MANAGER IAN BODWELL
FEAD/PM&E AMIN BAHROUR
FIRE PROTECTION PATRICK BAKAJ

DEPARTMENT OF THE NAVY
NAVAL FACILITIES ENGINEERING COMMAND
PUBLIC WORKS DEPARTMENT - MAINE
NAVAL FACILITIES ENGINEERING COMMAND ~ MID-ATLANTIC
NAVAL SHIPYARD - PORTSMOUTH, NH
PORTSMOUTH NAVAL SHIPYARD
KITTERY, ME
DRY DOCK #1 DEFUELING COMPLEX
DRE-7
GENERAL ARRANGEMENT - GROUND LEVEL PLAN

EPROJECT NO.: 1363311
CONSTR. CONTR. NO. N40085-17-C-5002
NAVFAC DRAWING NO. 12734974
SHEET 3 OF 117
GA-100A | DD1-16-1055

DRAWFORM REVISION: 10 OCTOBER 2014

10/28/2016 6:55:37 AM X:\297 PORTSMOUTH NAVAL SHIPYARD\297.005.001 - DD#1 DEFUELING COMPLEX DESIGN\DRAWINGS\DRE7\SHEETS\GA-100A.DWG

NOTES

1. THE INTENT OF THE GENERAL ARRANGEMENT DRAWINGS IS TO SHOW GENERAL REQUIREMENTS AND USAGE OF THE ENCLOSURE. THE EQUIPMENT IS SHOWN IN THE DRAWINGS FOR COORDINATION WITH OTHER TRADES AS WELL AS OVERALL CONTRACTOR COORDINATION. THESE LOCATIONS ARE PROVIDED FOR SYSTEM/BUILDING INSTALLATION TO ENSURE NO INTERFERENCES AND CONFLICTS EXIST WITH THE FUTURE SHIPYARD EQUIPMENT.
2. AREAS WITHIN CONTROL BOUNDARIES WILL BE USED FOR RADIOLOGICAL PURPOSES AND SHALL BE CONSTRUCTED SO AS TO MINIMIZE CRACKS AND CREVICES. IN ADDITION, THESE AREAS SHALL BE CONSTRUCTED WITH CLEANLINESS AND CAPTIVATION IN MIND, WITH SELF-LOCKING FASTENERS USED AS MUCH AS PRACTICAL. THE CONTROL BOUNDARY SHALL BE AIR TIGHT TO MAINTAIN NEGATIVE DP WITHIN THE AREA.
3. THIS DRAWING HIGHLIGHTS THE BASE BID AND ITEMS THAT DIFFER FROM THE BID OPTION WITH THE STORAGE ANNEX INCLUDED.

BASE BID DRE-7 SUMMARY

1. THE BASE BID DOES NOT INCLUDE THE STORAGE ANNEX COMPONENT OF DRE-7.
2. MODIFICATIONS FROM THE BID OPTION WITH THE STORAGE ANNEX INCLUDE THE FOLLOWING:
   1) STORAGE ANNEX NOT INCLUDED
   2) RELOCATION OF ENTRANCE FROM THE ACE TO NORTH
   3) PASSAGEWAY MODIFICATION FROM ACE TO ACCOMPANY ENTRANCE RELOCATION

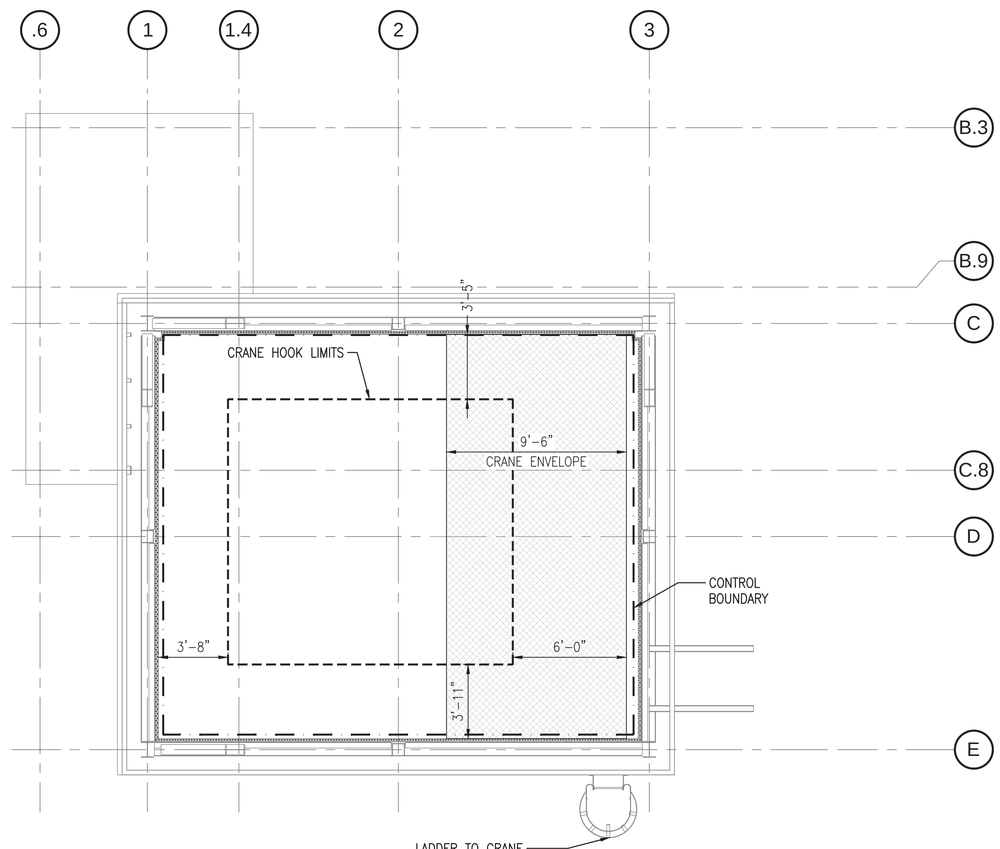

GENERAL ARRANGEMENT LOWER ROOF PLAN (NO STORAGE ANNEX)

SCALE: 1/4" = 1'-0"

0 2' 4' 8'
Scale: 1/4" = 1'-0"

SYM	DESCRIPTION	DATE	APPR
0	ISSUED FOR CONSTRUCTION	10/28/2016	CBC

NAVFAC

STATE OF MAINE
BENJAMIN C. TOWNSEND
No. 13287
LICENSED PROFESSIONAL ENGINEER
10/28/16
SEAL

Colby Company engineering
A/E INFO

APPROVED
Digitally Signed
David W. Greenfield
FOR COMMANDER NAVFAC

ACTIVITY
TIM FISHER
C. 2370.6 BRANCH HEAD

SATISFACTORY TO DATE 10/28/2016
DES BCT DRW ERB CHK BCT
PMDM PETER STOCKLESS
BRANCH MANAGER IAN BODWELL
FEA/DPM&E AMIN BAHROUR
FIRE PROTECTION PATRICK BAKAJ

DEPARTMENT OF THE NAVY
NAVAL FACILITIES ENGINEERING COMMAND
PUBLIC WORKS DEPARTMENT, MAINE
NAVAL FACILITIES ENGINEERING COMMAND ~ MID-ATLANTIC
NAVAL SHIPYARD, PORTSMOUTH, NH
PORTSMOUTH NAVAL SHIPYARD
KITTERY, ME
DRY DOCK #1 DEFUELING COMPLEX
DRE-7
GENERAL ARRANGEMENT LOWER ROOF PLAN (NO STORAGE ANNEX)

EPROJECT NO.: 1363311
CONSTR. CONTR. NO. N40085-17-C-5002
NAVFAC DRAWING NO. 12734975
SHEET 4 OF 117
GA-101 DD1-16-1056

DRAWFORM REVISION: 10 OCTOBER 2014

10/28/2016 6:55:41 AM X:\297 PORTSMOUTH NAVAL SHIPYARD\297.005.001 - DD#1 DEFUELING COMPLEX DESIGN\DRAWINGS\DRE7\SHEETS\GA-101.DWG

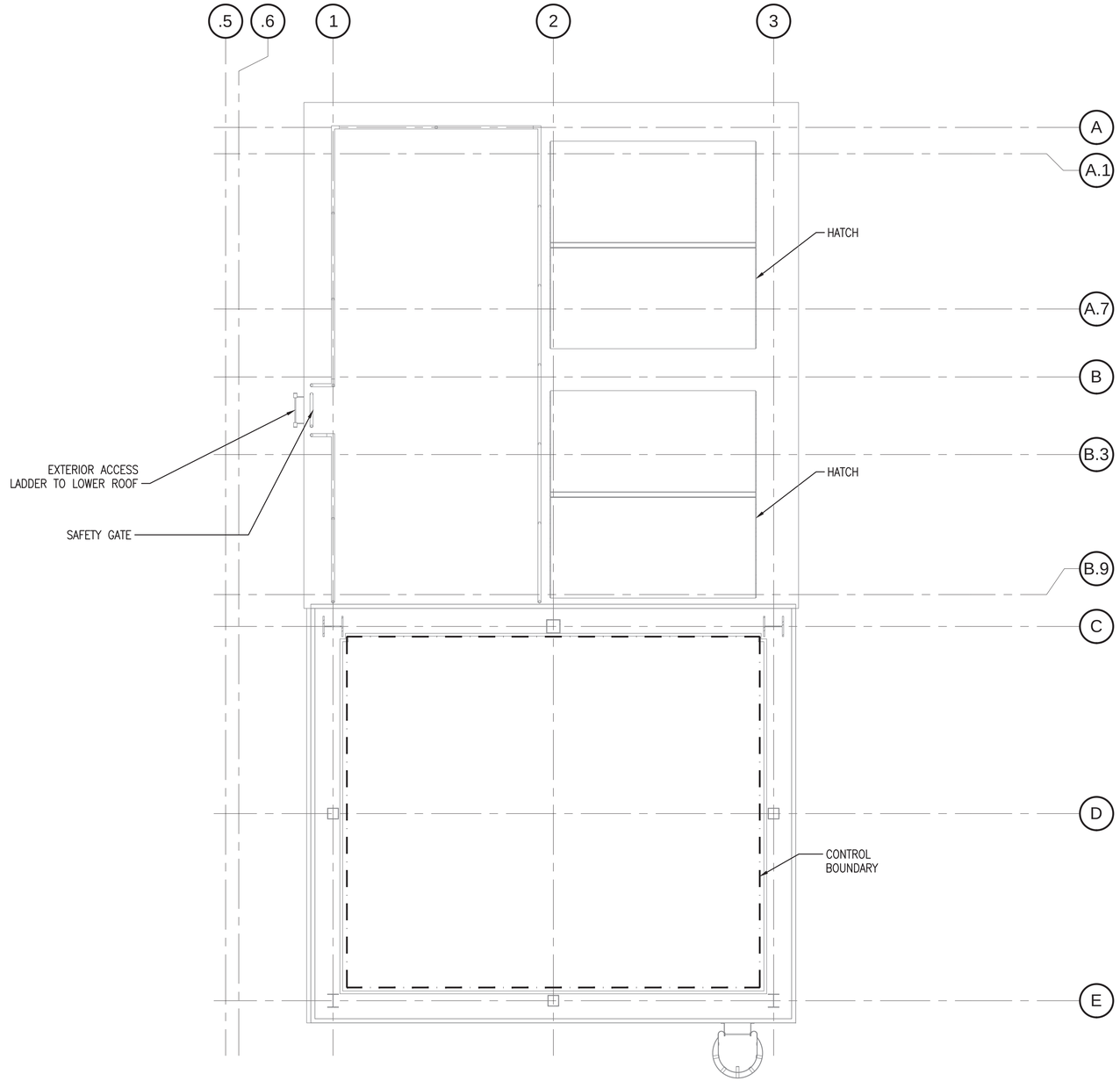

GENERAL ARRANGEMENT - LOWER ROOF PLAN

SCALE: 1/4" = 1'-0"

PLAN NORTH

0 2' 4' 8'
Scale: 1/4" = 1'-0"

NOTES

1. THE INTENT OF THE GENERAL ARRANGEMENT DRAWINGS IS TO SHOW GENERAL REQUIREMENTS AND USAGE OF THE ENCLOSURE. THE EQUIPMENT IS SHOWN IN THE DRAWINGS FOR COORDINATION WITH OTHER TRADES AS WELL AS OVERALL CONTRACTOR COORDINATION. THESE LOCATIONS ARE PROVIDED FOR SYSTEM/BUILDING INSTALLATION TO ENSURE NO INTERFERENCES AND CONFLICTS EXIST WITH THE FUTURE SHIPYARD EQUIPMENT.
2. AREAS WITHIN CONTROL BOUNDARIES WILL BE USED FOR RADIOLOGICAL PURPOSES AND SHALL BE CONSTRUCTED SO AS TO MINIMIZE CRACKS AND CREVICES. IN ADDITION, THESE AREAS SHALL BE CONSTRUCTED WITH CLEANLINESS AND CAPTIVATION IN MIND, WITH SELF-LOCKING FASTENERS USED AS MUCH AS PRACTICAL. THE CONTROL BOUNDARY SHALL BE AIR TIGHT TO MAINTAIN NEGATIVE DP WITHIN THE AREA.

SYM	DESCRIPTION	DATE	APPR
0	ISSUED FOR CONSTRUCTION	10/28/2016	CBC

STATE OF MAINE
BENJAMIN C. TOWNSEND
No. 13287
LICENSED
PROFESSIONAL ENGINEER
10/28/16
SEAL

Colby Company engineering
A/E INFO

APPROVED
Daniel W. Greenfield
FOR COMMANDER NAVFAC

ACTIVITY
TIM FISHER
C. 2370.6 BRANCH HEAD

SATISFACTORY TO DATE 10/28/2016

DES BCT | DRW ERB | CHK BCT

PM/DM PETER STOCKLESS
BRANCH MANAGER IAN BODWELL
FEAD/PMAE AMIN BAHROUR
FIRE PROTECTION PATRICK BAKAJ

DEPARTMENT OF THE NAVY
NAVAL FACILITIES ENGINEERING COMMAND
PUBLIC WORKS DEPARTMENT - MAINE

NAVAL FACILITIES ENGINEERING COMMAND ~ MID-ATLANTIC
NAVAL SHIPYARD - PORTSMOUTH, NH

PORTSMOUTH NAVAL SHIPYARD
KITTERY, ME

DRY DOCK #1 DEFUELING COMPLEX
DRE-7

GENERAL ARRANGEMENT – LOWER ROOF PLAN

EPROJECT NO.: 1363311

CONSTR. CONTR. NO.
N40085-17-C-5002

NAVFAC DRAWING NO.
12734976

SHEET 5 OF 117

GA-101A | DD1-16-1057

DRAWFORM REVISION: 10 OCTOBER 2014

10/28/2016 6:55:45 AM X:\297 PORTSMOUTH NAVAL SHIPYARD\297.005.001 - DD#1 DEFUELING COMPLEX DESIGN\DRAWINGS\DRE7\SHEETS\GA-101A.DWG

NOTES

1. THE INTENT OF THE GENERAL ARRANGEMENT DRAWINGS IS TO SHOW GENERAL REQUIREMENTS AND USAGE OF THE ENCLOSURE. THE EQUIPMENT IS SHOWN IN THE DRAWINGS FOR COORDINATION WITH OTHER TRADES AS WELL AS OVERALL CONTRACTOR COORDINATION. THESE LOCATIONS ARE PROVIDED FOR SYSTEM/BUILDING INSTALLATION TO ENSURE NO INTERFERENCES AND CONFLICTS EXIST WITH THE FUTURE SHIPYARD EQUIPMENT.
2. AREAS WITHIN CONTROL BOUNDARIES WILL BE USED FOR RADIOLOGICAL PURPOSES AND SHALL BE CONSTRUCTED SO AS TO MINIMIZE CRACKS AND CREVICES. IN ADDITION, THESE AREAS SHALL BE CONSTRUCTED WITH CLEANLINESS AND CAPTIVATION IN MIND, WITH SELF-LOCKING FASTENERS USED AS MUCH AS PRACTICAL. THE CONTROL BOUNDARY SHALL BE AIR TIGHT TO MAINTAIN NEGATIVE DP WITHIN THE AREA.

BRIDGE CRANE NOTES

1. THE ENCLOSURE WILL HOUSE A 5 TON BRIDGE CRANE.
2. THE BRIDGE CRANE ENVELOPE AND HOOK LIMITS ARE SHOWN FOR GENERAL CRANE REQUIREMENTS FOR COORDINATION WITH THE ENCLOSURE DESIGN AND CONSTRUCTION.
3. A CATWALK SYSTEM IS LOCATED ON THE CRANE TO ALLOW SERVICING/SURVEY OF EQUIPMENT AND RAILS.
4. THE CRANE CONTROLS CABINET IS LOCATED AT THE GROUND LEVEL.
5. FESTOON LOCATION: TBD
6. THE FOLLOWING ARE THE OVERALL BRIDGE CRANE REQUIREMENTS:
   - UPPER HOOK LIMIT: 48'-0" FROM GROUND LEVEL
   - LOWER HOOK LIMIT: 1'-6" MIN. FROM GROUND LEVEL
   - CRANE ENVELOPE: 9'-6"
   - HOOK HEIGHT BASED ON 1'-0" BELOW TOP OF CRANE RAIL
   - HOOK APPROACH: AS SHOWN ON DRAWINGS
   - SPAN (CENTER RAIL TO RAIL): 19'-6"

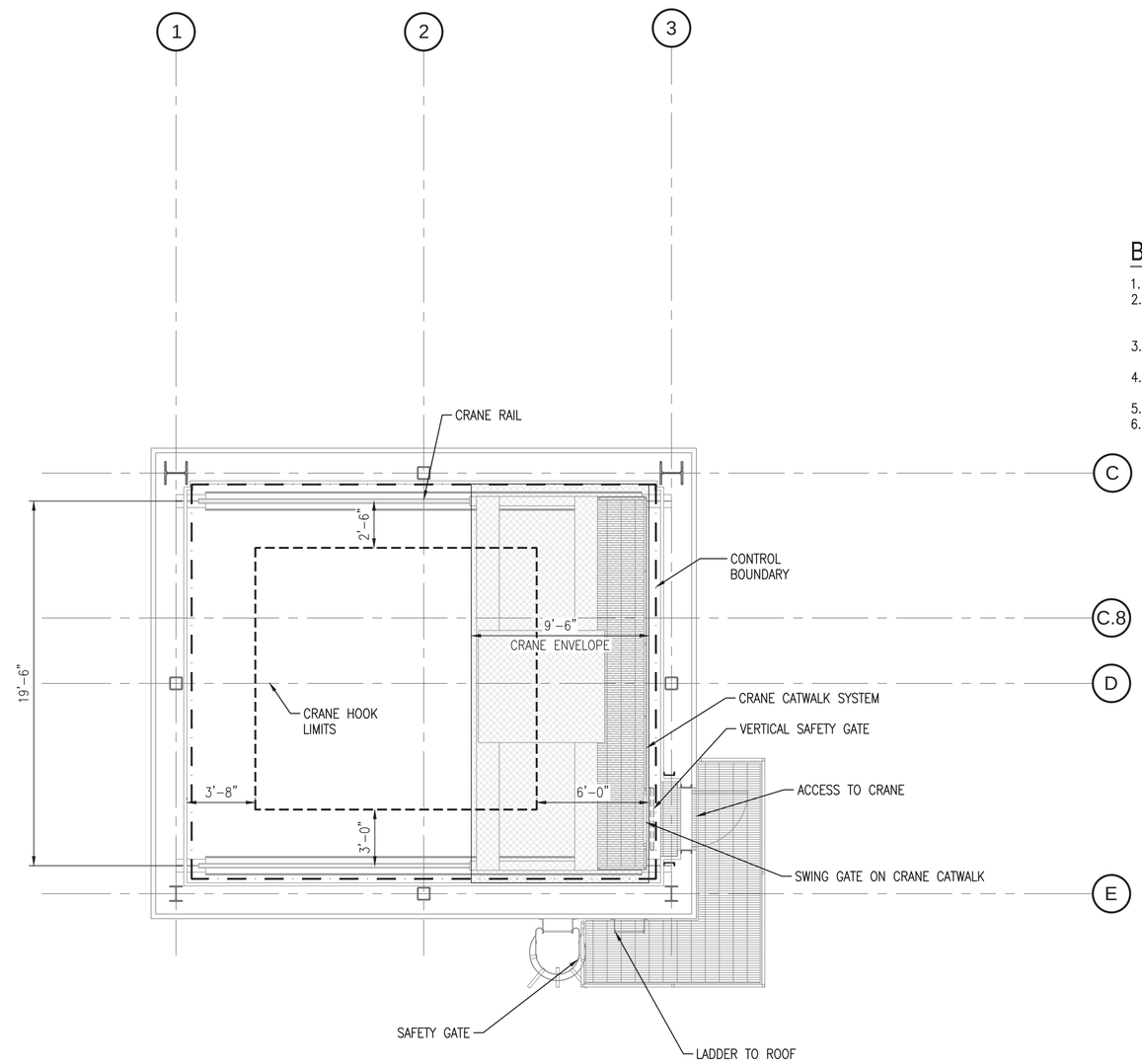

GENERAL ARRANGEMENT - CRANE LEVEL PLAN

SCALE: 1/4" = 1'-0"

PLAN NORTH

0 2' 4' 8'
Scale: 1/4" = 1'-0"

SYM	DESCRIPTION	DATE	APPR
0	ISSUED FOR CONSTRUCTION	10/28/2016	CBC

NAVFAC

STATE OF MAINE
BENJAMIN C. TOWNSEND
No. 13287
LICENSED
PROFESSIONAL ENGINEER
10/28/16
SEAL

Colby Company engineering
A/E INFO

APPROVED
Daniel W. Greenfield
FOR COMMANDER NAVFAC

ACTIVITY
TIM FISHER
C. 2370.6 BRANCH HEAD

SATISFACTORY TO DATE 10/28/2016

DES BCT | DRW ERB | CHK XXX

PM/DM PETER STOCKLESS
BRANCH MANAGER IAN BODWELL
FEAD/PM&E AMIN BAHROUR
FIRE PROTECTION PATRICK BAKAJ

DEPARTMENT OF THE NAVY
NAVAL FACILITIES ENGINEERING COMMAND
PUBLIC WORKS DEPARTMENT - MAINE
NAVAL FACILITIES ENGINEERING COMMAND – MID-ATLANTIC
NAVAL SHIPYARD - PORTSMOUTH, NH
PORTSMOUTH NAVAL SHIPYARD
KITTERY, ME
DRY DOCK #1 DEFUELING COMPLEX
DRE-7
GENERAL ARRANGEMENT – CRANE LEVEL PLAN

EPROJECT NO.: 1363311
CONSTR. CONTR. NO. N40085-17-C-5002
NAVFAC DRAWING NO. 12734977
SHEET 6 OF 117

GA-102 | DD1-16-1058

DRAWFORM REVISION: 10 OCTOBER 2014

10/28/2016 6:55:49 AM X:\297 PORTSMOUTH NAVAL SHIPYARD\297.005.001 - DDH1 DEFUELING COMPLEX DESIGN\DRAWINGS\DRE7\SHEETS\GA-102.DWG

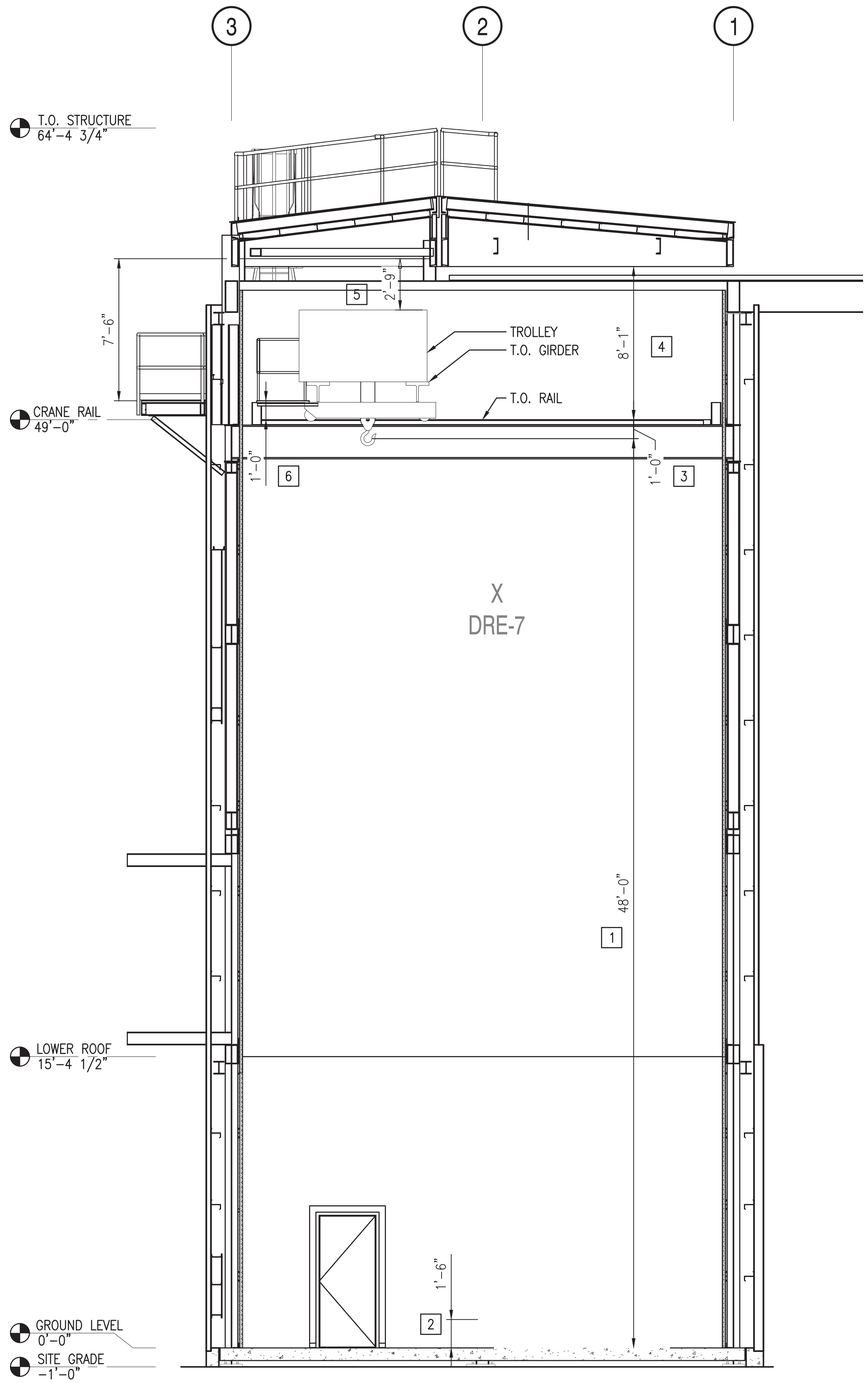

BUILDING SECTION WITH BRIDGE CRANE

SCALE: 1/4" = 1'-0"

A1

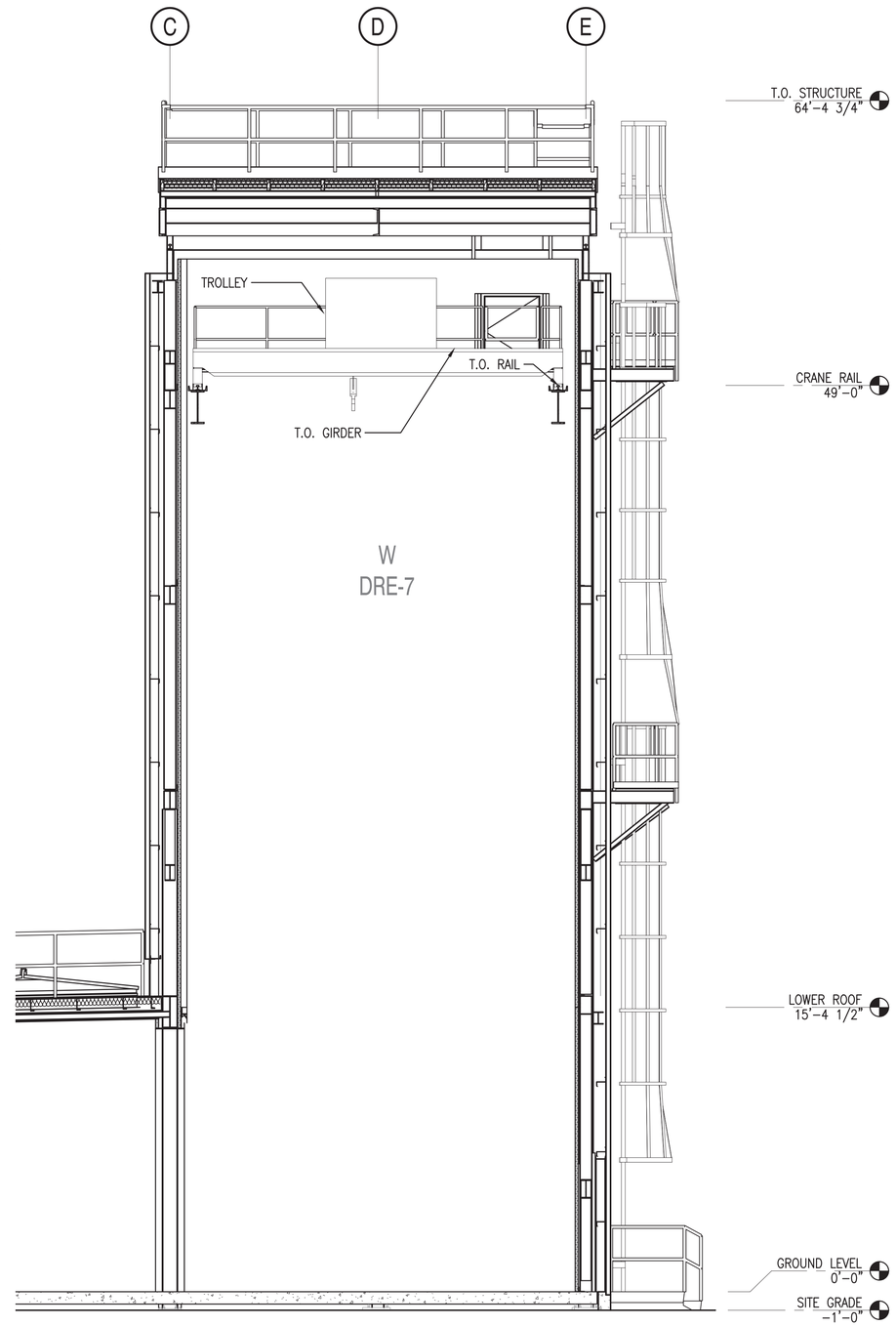

BUILDING SECTION WITH BRIDGE CRANE

SCALE: 1/4" = 1'-0"

A3

NOTES

1. THE INTENT OF THE GENERAL ARRANGEMENT DRAWINGS IS TO SHOW GENERAL REQUIREMENTS AND USAGE OF THE ENCLOSURE. THE EQUIPMENT IS SHOWN IN THE DRAWINGS FOR COORDINATION WITH OTHER TRADES AS WELL AS OVERALL CONTRACTOR COORDINATION. THESE LOCATIONS ARE PROVIDED FOR SYSTEM/BUILDING INSTALLATION TO ENSURE NO INTERFERENCES AND CONFLICTS EXIST WITH THE FUTURE SHIPYARD EQUIPMENT.
2. CRANE ENVELOPE SHOWN REPRESENTS THE SPACE THE BRIDGE CRANE OCCUPIES WHEN IN ITS PARKED POSITION. THE BRIDGE CRANE IS CAPABLE OF TRAVERSING THE ENCLOSURE.
3. CRANE HOOK LIMITS ARE APPROXIMATIONS BASED ON LIMITATIONS OF THE BRIDGE CRANE.
4. REFER TO GA-102 FOR BRIDGE CRANE INFORMATION.
5. REFER TO THE STRUCTURAL DRAWINGS FOR ADDITIONAL INFORMATION ON CLEARANCES TO STRUCTURE ABOVE.

KEYED NOTES:

1. DISTANCE FROM GROUND TO UPPER HOOK LIMIT (MAX. HOOK HEIGHT)
2. DISTANCE FROM GROUND TO LOWER HOOK LIMIT (MIN. HOOK HEIGHT)
3. DISTANCE FROM UPPER HOOK LIMIT TO TOP OF CRANE RAILS.
4. DISTANCE FROM CRANE RAILS TO UNDERSIDE OF MOVABLE ROOF SECTION.
5. DISTANCE FROM TOP OF BRIDGE CRANE TROLLEY TO NEAREST OVERHEAD OBSTRUCTION.
6. DISTANCE FROM CRANE WALKWAY TO TOP OF CRANE RAILS.

0 2' 4' 8'
Scale: 1/4" = 1'-0"

SYM	DESCRIPTION	DATE	APPR
0	ISSUED FOR CONSTRUCTION	10/28/2016	CBC

NAVFAC

STATE OF MAINE
BENJAMIN C. TOWNSEND
No.13287
LICENSED
PROFESSIONAL ENGINEER
10/28/16
SEAL

Colby Company engineering
A/E INFO

APPROVED
Daniel W. Greenfield
FOR COMMANDER NAVFAC

ACTIVITY
TIM FISHER
C. 2370.6 BRANCH HEAD

SATISFACTORY TO DATE 10/28/2016
DES BCT DRW ERB CHK XXX
PMDM PETER STOCKLESS
BRANCH MANAGER IAN BODWELL
FEAD/PM&E AMIN BAHROUR
FIRE PROTECTION PATRICK BAKAJ

DEPARTMENT OF THE NAVY
NAVAL FACILITIES ENGINEERING COMMAND
PUBLIC WORKS DEPARTMENT - MAINE
NAVAL FACILITIES ENGINEERING COMMAND ~ MID-ATLANTIC
NAVAL SHIPYARD - PORTSMOUTH, NH
PORTSMOUTH NAVAL SHIPYARD
KITTERY, ME
DRY DOCK #1 DEFUELING COMPLEX
DRE-7
BUILDING SECTION WITH BRIDGE CRANE

EPROJECT NO.: 1363311
CONSTR. CONTR. NO. N40085-17-C-5002
NAVFAC DRAWING NO. 12734978
SHEET 7 OF 117
GA-301 DD1-16-1059

DRAWFORM REVISION: 10 OCTOBER 2014

10/28/2016 6:55:54 AM X:\297 PORTSMOUTH NAVAL SHIPYARD\297.005.001 - DD#1 DEFUELING COMPLEX DESIGN\DRAWINGS\DRE7\SHEETS\GA-301.DWG

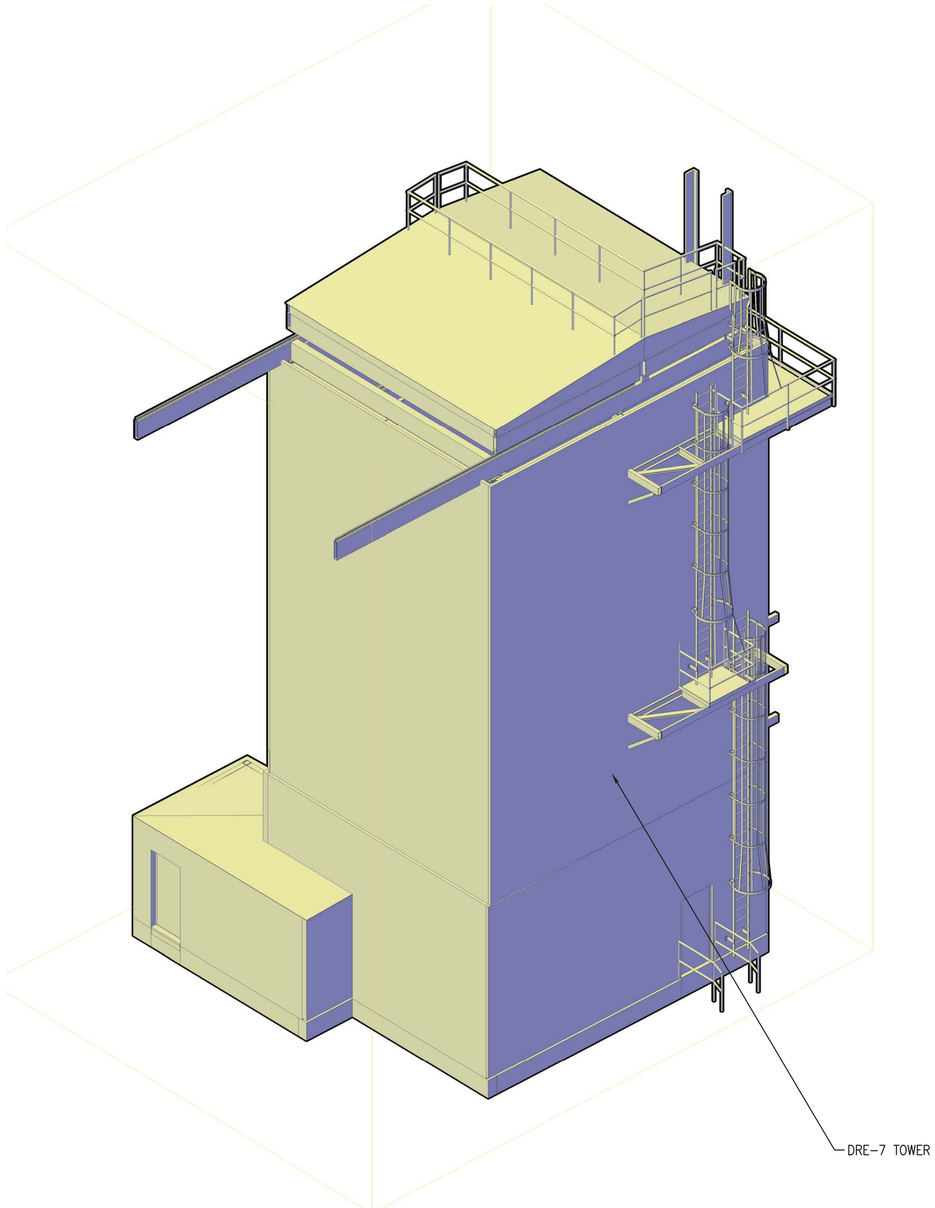

DRE-7 BASE BID
SCALE: NTS
A1

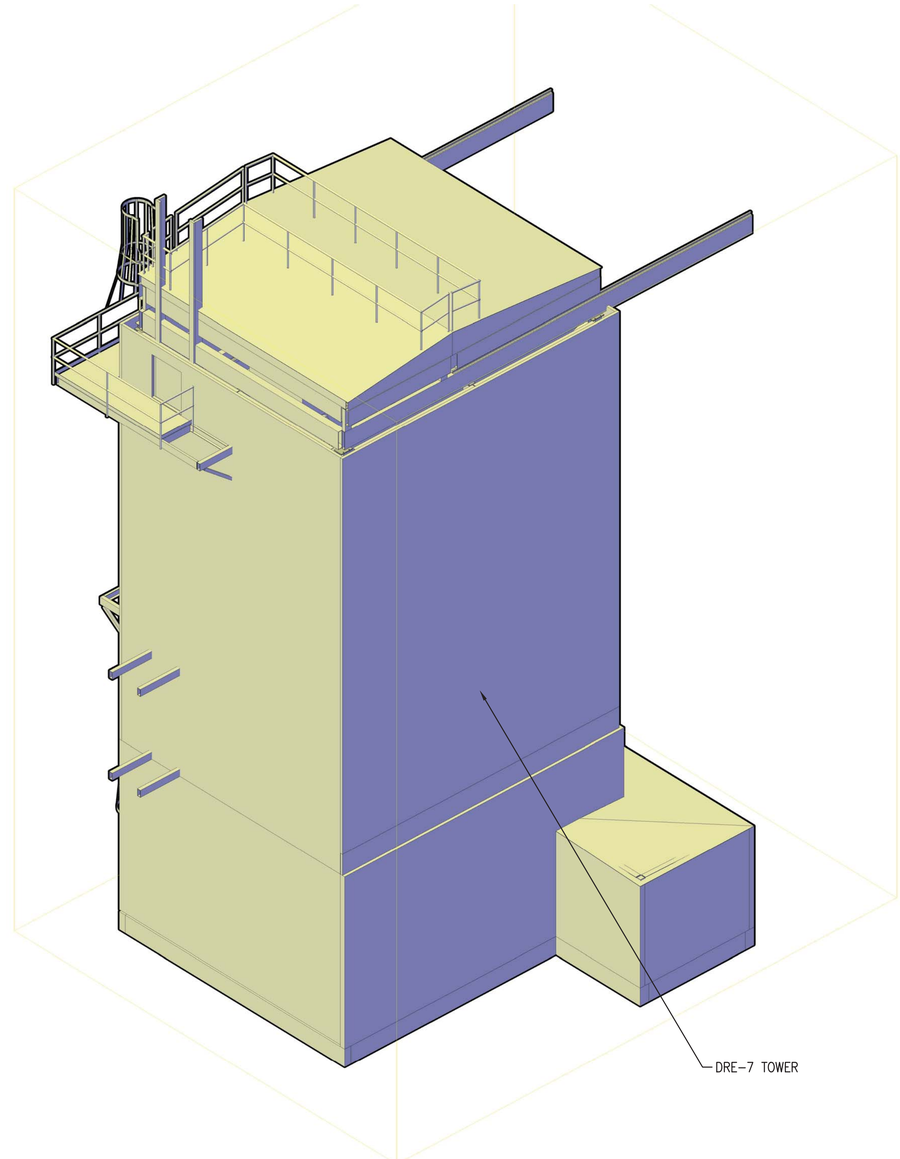

DRE-7 BASE BID
SCALE: NTS
A3

SYM	DESCRIPTION	DATE	APPR
0	ISSUED FOR CONSTRUCTION	10/28/2016	CBC

STATE OF MAINE
BENJAMIN C. TOWNSEND
No.13287
LICENSED
PROFESSIONAL ENGINEER
10/28/16
SEAL

Colby Company engineering
A/E INFO

APPROVED
Daniel W. Greenfield
FOR COMMANDER NAVFAC

ACTIVITY:
TIM FISHER
C. 2370.6 BRANCH HEAD

SATISFACTORY TO DATE 10/28/2016
DES BCT DRW ERB CHK BCT
PMDM PETER STOCKLESS
BRANCH MANAGER IAN BODWELL
FEA/PM&E AMIN BAHROUR
FIRE PROTECTION PATRICK BAKAJ

DEPARTMENT OF THE NAVY
NAVAL FACILITIES ENGINEERING COMMAND
PUBLIC WORKS DEPARTMENT - MAINE

NAVAL FACILITIES ENGINEERING COMMAND ~ MID-ATLANTIC
NAVAL SHIPYARD - PORTSMOUTH, NH

PORTSMOUTH NAVAL SHIPYARD
KITTERY, ME

DRY DOCK #1 DEFUELING COMPLEX
DRE-7

GENERAL ARRANGEMENT RENDERINGS (NO STORAGE ANNEX)

EPROJECT NO.: 1363311
CONSTR. CONTR. NO. N40085-17-C-5002
NAVFAC DRAWING NO. 12734979
SHEET 8 OF 117

GA-901 | DD1-16-1060

DRAWFORM REVISION: 10 OCTOBER 2014

10/28/2016 6:56:06 AM X:\297 PORTSMOUTH NAVAL SHIPYARD\297.005.001 - DD#1 DEFUELING COMPLEX DESIGN\DRAWINGS\DRE7\SHEETS\GA-901.DWG

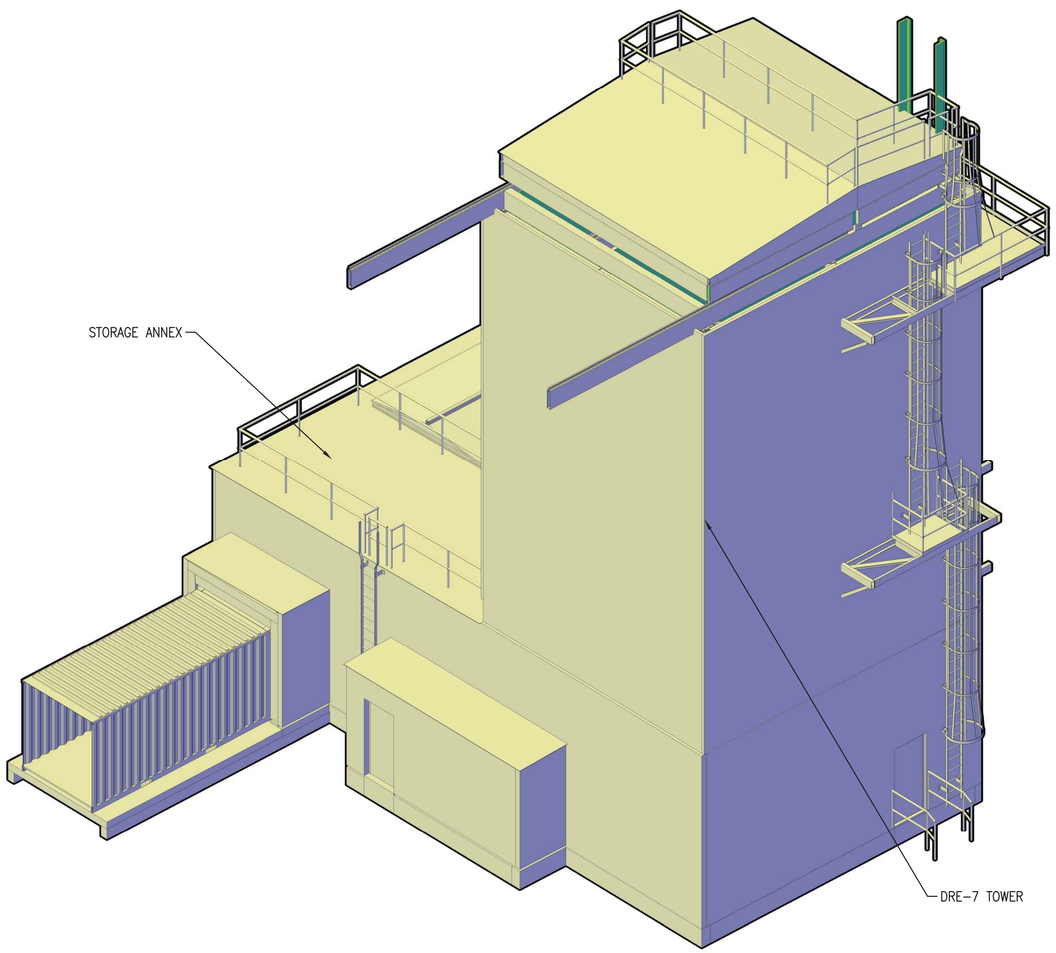

DRE-7 WITH STORAGE ANNEX OPTION (A1)
SCALE: NTS

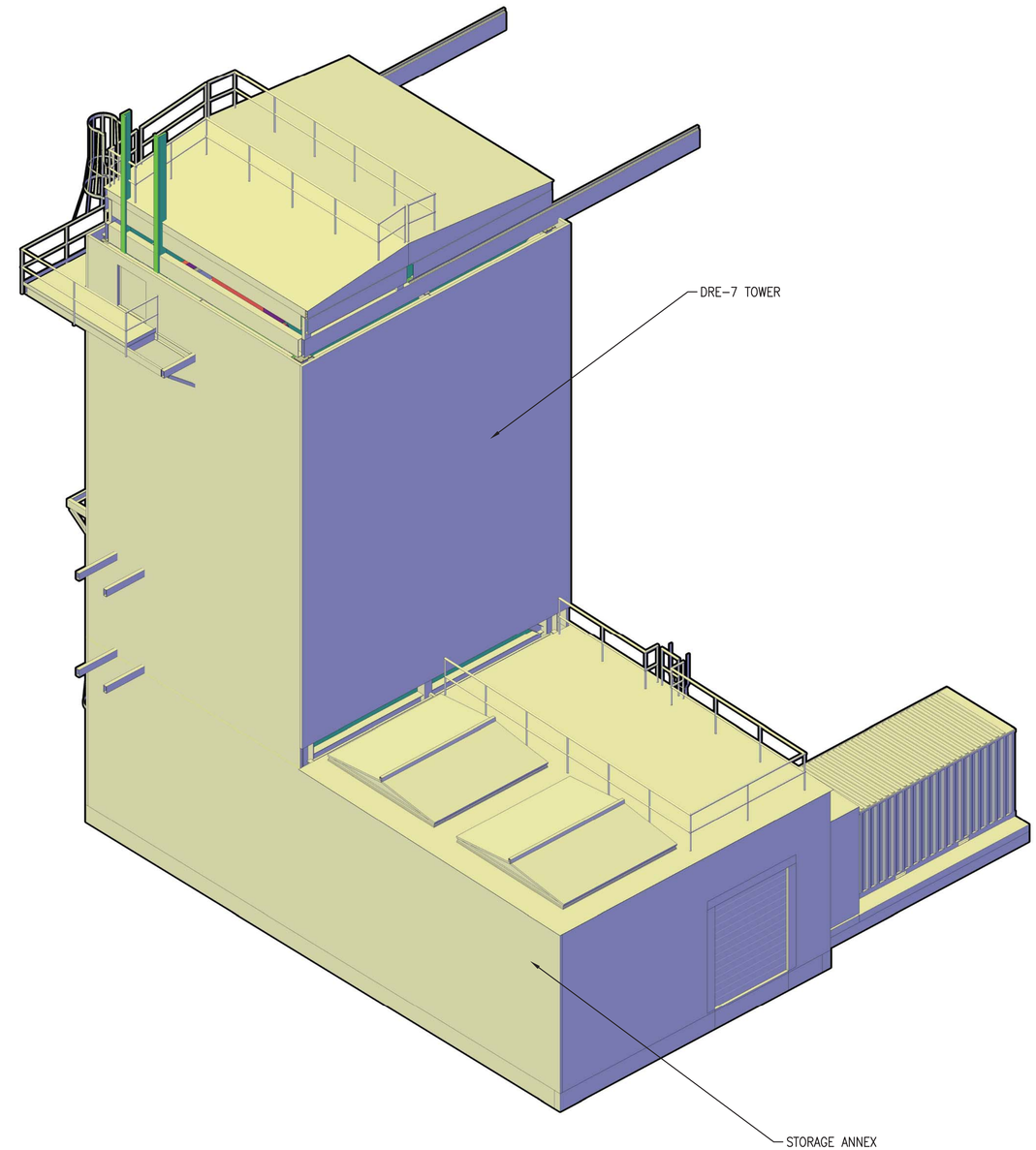

DRE-7 WITH STORAGE ANNEX OPTION (A3)
SCALE: NTS

SYM	DESCRIPTION	DATE	APPR
0	ISSUED FOR CONSTRUCTION	10/28/2016	CBC

NAVFAC

STATE OF MAINE
BENJAMIN C. TOWNSEND
No.13287
LICENSED
PROFESSIONAL ENGINEER
10/28/16
SEAL

Colby Company engineering
A/E INFO

APPROVED
Daniel W. Greenfield
FOR COMMANDER NAVFAC

ACTIVITY
TIM FISHER
C. 2370.6 BRANCH HEAD

SATISFACTORY TO DATE 10/28/2016
DES BCT DRW ERB CHK BCT
PMOM PETER STOCKLESS
BRANCH MANAGER IAN BODWELL
FEA/DPMAE AMIN BAHROUR
FIRE PROTECTION PATRICK BAKAJ

DEPARTMENT OF THE NAVY
NAVAL FACILITIES ENGINEERING COMMAND
PUBLIC WORKS DEPARTMENT - MAINE

NAVAL FACILITIES ENGINEERING COMMAND ~ MID-ATLANTIC
NAVAL SHIPYARD - PORTSMOUTH, NH

PORTSMOUTH NAVAL SHIPYARD
KITTERY, ME

DRY DOCK #1 DEFUELING COMPLEX
DRE-7

GENERAL ARRANGEMENT – RENDERINGS

EPROJECT NO.: 1363311
CONSTR. CONTR. NO. N40085-17-C-5002
NAVFAC DRAWING NO. 12734980
SHEET 9 OF 117
GA-901A DD1-16-1061

DRAWFORM REVISION: 10 OCTOBER 2014

10/28/2016 6:56:21 AM X:\297 PORTSMOUTH NAVAL SHIPYARD\297.005.001 - DD#1 DEFUELING COMPLEX DESIGN\DRAWINGS\DRE7\SHEETS\GA-901A.DWG

GENERAL NOTES

1. THE FOLLOWING DRAWINGS, LS–100, LS–100A, AND LS–101 APPLY TO THIS CODE COMPLIANCE SUMMARY. REFER TO SITE PACKAGE SHEETS LS–001 AND LS–101 FOR MORE SITE–RELATED INFORMATION ON THE DRE–7.
2. THE AUTHORITY HAVING JURISDICTION (AHJ) FOR FIRE PROTECTION AND LIFE SAFETY ON THIS PROJECT WILL BE THE ASSIGNED FIRE PROTECTION ENGINEER FROM NAVFAC MIDLANT.
3. THE ENCLOSURE WILL BE USED PRIMARILY FOR RADIOLOGICAL PURPOSES. PNSY DIRECTIVES AND RADIOLOGICAL STANDARDS TAKE THE HIGHEST PRECEDENCE IN DETERMINING THE ENCLOSURE DESIGN REQUIREMENTS, FOLLOWED BY UFC 3–600–10N (FINAL DRAFT) AND UFC 3–600–01.
4. BUILDING AND FIRE CODES WERE CONSULTED AND FOLLOWED FOR THE DESIGN OF THIS ENCLOSURE, BUT SOME REQUIREMENTS HAVE BEEN OVERRIDDEN DUE TO CONFLICT WITH NAVSEA REQUIREMENTS ASSOCIATED WITH THIS TYPE OF FACILITY, AS DICTATED BY PNSY AND THE AHJ.

PNSY DIRECTIVES

1. DD#1 DEFUELING ENCLOSURES SHALL NOT INCORPORATE SPRINKLER PROTECTION DUE TO RADIOLOGICAL CONTROL CONSIDERATIONS.
2. FIRE EXTINGUISHERS IN ENCLOSURES SHALL BE ABC DRY CHEMICAL TYPE, SUPPLIED AND INSTALLED BY PNSY, AND SHALL MEET NFPA 10 STANDARDS.
3. FIRE ALARM DEVICES SHALL TIE INTO AN ADDRESSABLE FACP AND RADIO TRANSMITTER IN THE ACE–3 ENCLOSURE. A REMOTE ANNUNCIATOR FOR THE COMPLEX SHALL BE INSTALLED OUTSIDE OF THE ACE–3 FOR FIRE DEPARTMENT USE.
4. MINIMAL FLAMMABLE AND COMBUSTIBLE MATERIALS WILL BE STORED AND USED IN THE ENCLOSURE AND THE ENCLOSURE DOES NOT CONSTITUTE A GROUP H HIGH HAZARD OCCUPANCY PER IBC OR NFPA DEFINITIONS.
5. PNSY MAY PERFORM WELDING AND OTHER HOT WORK INSIDE THE DRE–7 ENCLOSURE. PNSY STANDARDS AND PROTOCOL SHALL APPLY WHEN HOT WORK IS BEING PERFORMED.
6. AREAS WITHIN CONTROL BOUNDARIES WILL BE USED FOR RADIOLOGICAL PURPOSES AND SHALL BE CONSTRUCTED SO AS TO MINIMIZE CRACKS AND CREVICES. IN ADDITION, THESE AREAS SHALL BE CONSTRUCTED WITH CLEANLINESS AND CAPTIVATION IN MIND, WITH SELF–LOCKING FASTENERS USED AS MUCH AS PRACTICAL.
7. FIRE ALARM SYSTEM SHALL NOT TIE INTO THE AIR HANDLING EQUIPMENT OR MOVEABLE ROOF CONTROLS. AUTOMATIC ACTUATION OF THIS EQUIPMENT COULD HARM PERSONNEL AND INTERFERE WITH RADIOLOGICAL CONTROLS.

UFC 3-600-01 - FIRE PROTECTION ENGINEERING FOR FACILITIES, 2013

1. THIS UFC STANDARD REFERENCES THE FOLLOWING DOCUMENTS:
   - 1.1. NFPA 1: FIRE LANE DIMENSIONS
   - 1.2. NFPA 10: FIRE EXTINGUISHERS (TO BE LOCATED, PROVIDED, AND INSTALLED BY PNSY)
   - 1.3. NFPA 72: FIRE ALARM
   - 1.4. NFPA 101: EGRESS AND LIFE SAFETY
   - 1.5. IBC: OCCUPANCY CLASSIFICATION, BUILDING CONSTRUCTION, ALLOWABLE AREAS AND HEIGHTS
2. TABLE C–1, HYDRANT FLOW RATE REQUIREMENTS: 1,500 GPM AT 20 PSI.
   - 2.1. UP TO 1,250 GPM CAN COME FROM A SINGLE HYDRANT.
   - 2.2. THE DESIGN TEAM WAS NOT ABLE TO PERFORM A HYDRANT FLOW TEST WITHIN THE DESIGN PERIOD DUE TO ACTIVE ON–GOING OPERATIONS. A FLOW TEST WILL BE CONDUCTED BY THE TEAM PRIOR TO PROJECT CONSTRUCTION AND RESULTS WILL BE SUBMITTED IN AN ADDENDUM.
   - 2.3. BASED ON DATA SUPPLIED BY PNSY, HYDRANT #37 HAS A FLOW RATE OVER 1,000 GPM AT A RESIDUAL PRESSURE OF APPROXIMATELY 60 PSI. A NEW HYDRANT IS PROPOSED ADJACENT TO THE M–140 COMPLEX. IT IS ANTICIPATED THAT THE SYSTEM WILL BE CAPABLE OF PROVIDING THE DESIGN HYDRANT FLOW RATE AND THIS WILL BE ADDRESSED IN A SEPARATE ADDENDUM.
   - 2.4. HYDRANT #37 IS AND THE PROPOSED HYDRANT WILL BE WITHIN A 350 FT HOSE LAY DISTANCE FROM DRE–7. REFER TO THE SITE PACKAGE LS–101.

NFPA 1 - FIRE CODE, 2015

1. FIRE DEPARTMENT ACCESS TO DRE–7 IS VIA TWO FIRE LANES. REFER TO THE SITE PACKAGE SHEET LS–101 FOR MORE INFORMATION.
2. 8.2.3.2.1: FIRE DEPARTMENT ACCESS ROAD IS WITHIN 50 FEET OF AT LEAST ONE EXTERIOR WALL.
3. 8.2.3.2.2: FIRE DEPARTMENT ACCESS ROAD IS WITHIN 150 FEET OF ANY EXTERIOR WALL.
4. 18.2.3.4: FIRE DEPARTMENT ACCESS ROAD HAS AN UNOBSTRUCTED WIDTH OF AT LEAST 20 FEET AND A VERTICAL CLEARANCE OF AT LEAST 13.5 FEET.

INTERNATIONAL BUILDING CODE, 2015

1. OCCUPANCY CLASSIFICATION: GROUP U, UTILITY AND MISCELLANEOUS
2. BUILDING CONSTRUCTION: TYPE IIB, NON–COMBUSTIBLE, UNPROTECTED
3. FIRE WALLS AND BARRIERS:
   SECTION 3104.5.1.1: PASSAGEWAY SHALL BE SEPARATED FROM THE INTERIOR OF THE DRE–7 BY A 2–HR FIRE BARRIER. THE BARRIER SHALL EXTEND 10 FEET (OR TO THE EDGE OF THE WALL, IF SHORTER THAN 10 FEET) IN EVERY DIRECTION SURROUNDING THE PERIMETER OF THE CONNECTION. REFER TO SITE PACKAGE SHEET LS–101.
4. NUMBER OF FLOORS BELOW GRADE: NONE
5. ALLOWABLE NUMBER OF STORIES: TWO
   ACTUAL NUMBER OF STORIES: ONE
   CRANE PLATFORM DOES NOT COUNT AS A STORY BECAUSE ITS AGGREGATE AREA IS LESS THAN 2/3 OF THE GROUND FLOOR AREA.
6. TABLE 503, ALLOWABLE AREA: 8,500 SQUARE FEET
   ACTUAL ENCLOSURE AREA: 1,410 SQUARE FEET
7. TABLE 503, ALLOWABLE HEIGHT: 55 FEET
   ACTUAL ENCLOSURE HEIGHT: APPROX 57 FEET TO BOTTOM OF ROOF MODULE
   ALLOWABLE PER SECTION 503.1 DUE TO THE SPECIAL INDUSTRIAL USAGE OF THE ENCLOSURE

NFPA 101 - LIFE SAFETY CODE, 2015

1. OCCUPANCY CLASSIFICATION: INDUSTRIAL, SPECIAL PURPOSE (CHAPTER 40)
2. NUMBER OF OCCUPANTS: 20
3. TABLE 40.2.5.2.1, MINIMUM HORIZONTAL DIMENSION OF WALKWAYS, PLATFORMS: 22 INCHES
4. NUMBER OF EXITS REQUIRED: TWO
   NUMBER OF EXITS PROVIDED: TWO
5. TABLE 40.2.6, MAXIMUM TRAVEL DISTANCE TO EXIT: 300 FT
   ACTUAL MAX LENGTH OF TRAVEL: 100 FT (GROUND LEVEL)
6. MAXIMUM COMMON PATH OF TRAVEL: 50 FT
   ACTUAL COMMON PATH OF TRAVEL: 20 FT (GROUND LEVEL)
7. DEAD END CORRIDORS ARE NOT PRESENT.
8. 7.2.9.1: LADDERS ARE PERMITTED FOR EGRESS FROM EQUIPMENT PLATFORMS IF THEY COMPLY WITH ANSI A14.3 "SAFETY REQUIREMENTS FOR FIXED LADDERS".

NFPA 801- STANDARD FOR FIRE PROTECTION FOR FACILITIES HANDLING RADIOACTIVE MATERIALS, 2014

1. AREAS REQUIRING SPECIAL CLEANLINESS CONSIDERATION: GROUND FLOOR
   - 1.1. MINIMIZE SURFACE–MOUNTED ITEMS/WIRING AT GROUND LEVEL FOR CLEANING PURPOSES.
2. INTERIOR WALL AND CEILING FINISHES SHALL BE CLASS A IN ACCORDANCE WITH NFPA 255.
3. INTERIOR FLOOR FINISHES SHALL BE CLASS I IN ACCORDANCE WITH NFPA 253.

ABBREVIATIONS

AFF	ABOVE FINISHED FLOOR
AFG	ABOVE FINISHED GRADE
AHJ	AUTHORITY HAVING JURISDICTION
BFG	BELOW FINISHED GRADE
BLDG	BUILDING
CLG	CEILING
CO2	CARBON DIOXIDE
DB	DIRECT BURIED
DISC	DISCONNECT
DN	DOWN
EQP	EQUIPMENT
EXIST	EXISTING
FAA	FIRE ALARM ANNUNCIATOR
FACP	FIRE ALARM CONTROL PANEL
FBO	FURNISHED BY OTHERS
FFE	FINAL FOUNDATION ELEVATION
FLR	FLOOR
GEN	GENERATOR
GND	GROUND
IBC	INTERNATIONAL BUILDING CODE
MAX	MAXIMUM
MFR	MANUFACTURER
NC	NORMALLY CLOSED
NEC	NATIONAL ELECTRIC CODE
NEG	NEGATIVE
NFPA	NATIONAL FIRE PROTECTION ASSOCIATION
NIC	NOT IN CONTRACT
NTS	NOT TO SCALE
PNSY	PORTSMOUTH NAVAL SHIPYARD
RFP	REQUEST FOR PROPOSAL
RM	ROOM
UFC	UNIFIED FACILITIES CRITERIA

SYM	DESCRIPTION	DATE	APPR
0	ISSUED FOR CONSTRUCTION	10/28/2016	CBC

NAVFAC

STATE OF MAINE
EMILY PINYARD
No. 12126
LICENSED
PROFESSIONAL ENGINEER
10/28/16
SEAL

Colby Company engineering
A/E INFO

APPROVED
Daniel W. Greenfield
FOR COMMANDER NAVFAC

ACTIVITY
TIM FISHER
C. 2370.6 BRANCH HEAD

SATISFACTORY TO DATE 10/28/2016

DES ERP | DRW CSS | CHK WEP

PM/DM PETER STOCKLESS
BRANCH MANAGER IAN BODWELL
FEAD/PM&E AMIN BAHROUR
FIRE PROTECTION PATRICK BAKAJ

DEPARTMENT OF THE NAVY
NAVAL FACILITIES ENGINEERING COMMAND
PUBLIC WORKS DEPARTMENT - MAINE
NAVAL FACILITIES ENGINEERING COMMAND ~ MID-ATLANTIC
NAVAL SHIPYARD - PORTSMOUTH, NH
PORTSMOUTH NAVAL SHIPYARD
KITTERY, ME
DRY DOCK #1 DEFUELING COMPLEX
DRE-7
LIFE SAFETY ABBREVIATIONS AND GENERAL NOTES

EPROJECT NO.: 1363311
CONSTR. CONTR. NO. N40085-17-C-5002
NAVFAC DRAWING NO. 12734981
SHEET 10 OF 117
LS-001 | DD1-16-1062

DRAWFORM REVISION: 10 OCTOBER 2014

10/28/2016 6:56:26 AM X:\297 PORTSMOUTH NAVAL SHIPYARD\297.005.001 - DD#1 DEFUELING COMPLEX DESIGN\DRAWINGS\DRE\SHEETS\LS-001.DWG

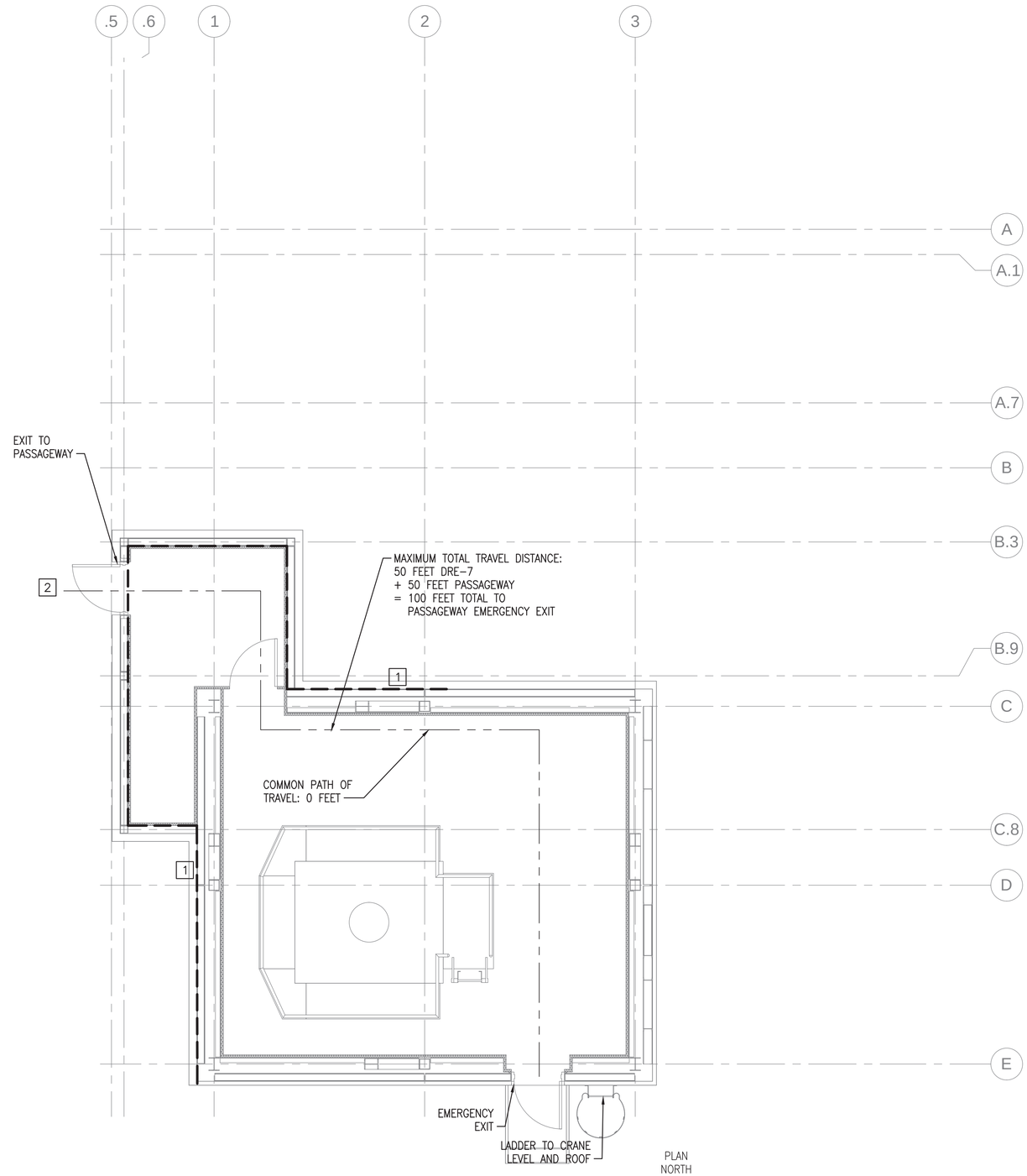

GROUND LEVEL LIFE SAFETY PLAN (NO STORAGE ANNEX)

SCALE: 1/4" = 1'-0"

NOTES

1. SEE SHEET LS-001 FOR ABBREVIATIONS AND GENERAL NOTES.
2. SEE SHEET LS-101 IN THE SITE PACKAGE FOR A SITE-LEVEL LAYOUT OF THE DRE-7 AND PASSAGEWAYS.

KEYED NOTES

1. 2-HR FIRE BARRIER AT PASSAGEWAY CONNECTION TO DRE-7 AND AT WALL FACING M-140 COMPLEX.
2. EXIT DISCHARGE THROUGH PASSAGEWAY. SEE SITE PACKAGE SHEET LS-101 FOR PASSAGEWAY LAYOUT.

SYM	DESCRIPTION	DATE	APPR
0	ISSUED FOR CONSTRUCTION	10/28/2016	CBC

NAVFAC

STATE OF MAINE
EMILY PINYARD
No. 12126
LICENSED
PROFESSIONAL ENGINEER
10/28/16
SEAL

Colby Company engineering
A/E INFO

APPROVED
Digitally signed
Daniel W. Greenfield
FOR COMMANDER NAVFAC

ACTIVITY
TIM FISHER
C. 2370.6 BRANCH HEAD

SATISFACTORY TO DATE 10/28/2016

DES EAF DRW CSS CHK AHS

PMDM PETER STOCKLESS

BRANCH MANAGER IAN BODWELL

FEA/PM&E AMIN BAHROUR

FIRE PROTECTION PATRICK BAKAJ

DEPARTMENT OF THE NAVY
NAVAL FACILITIES ENGINEERING COMMAND
PUBLIC WORKS DEPARTMENT : MAINE

NAVAL FACILITIES ENGINEERING COMMAND ~ MID-ATLANTIC
NAVAL SHIPYARD: PORTSMOUTH, NH

PORTSMOUTH NAVAL SHIPYARD
KITTERY, ME

DRY DOCK #1 DEFUELING COMPLEX
DRE-7

GROUND LEVEL LIFE SAFETY PLAN (NO STORAGE ANNEX)

EPROJECT NO.: 1363311

CONSTR. CONTR. NO.
N40085-17-C-5002

NAVFAC DRAWING NO.
12734982

SHEET 11 OF 117

LS-100 | DD1-16-1063

DRAWFORM REVISION: 10 OCTOBER 2014

10/28/2016 6:56:31 AM X:\297 PORTSMOUTH NAVAL SHIPYARD\297.005.001 - DD#1 DEFUELING COMPLEX DESIGN\DRAWINGS\DRE7\SHEETS\LS-100.DWG

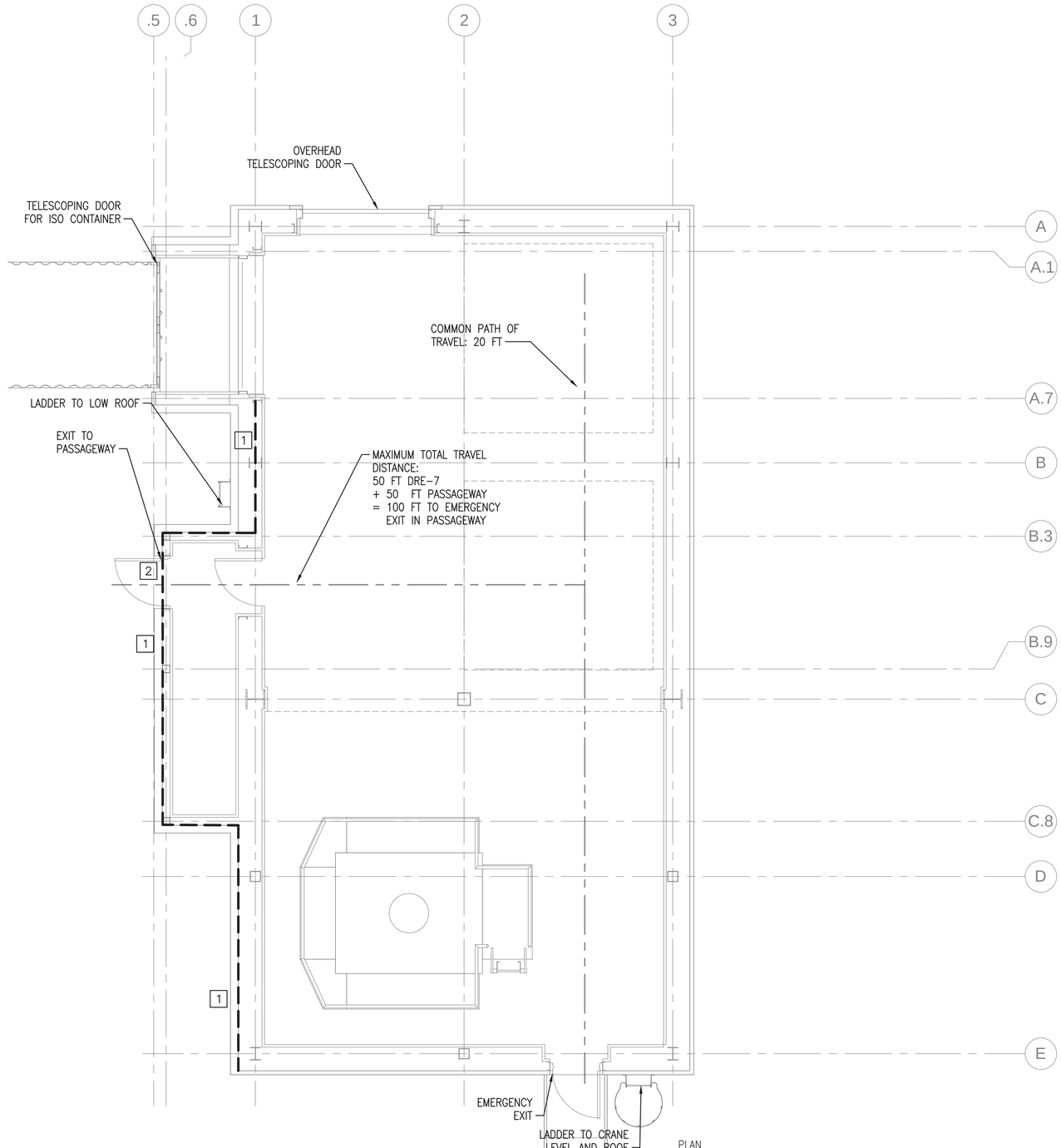

GROUND LEVEL LIFE SAFETY PLAN

SCALE: 1/4" = 1'-0"

NOTES

1. SEE SHEET LS-001 FOR ABBREVIATIONS AND GENERAL NOTES.
2. SEE SHEET LS-101 IN THE SITE PACKAGE FOR A SITE-LEVEL LAYOUT OF THE DRE-7 AND PASSAGEWAYS.

KEYED NOTES

1. 2-HR FIRE BARRIER AT PASSAGEWAY CONNECTION TO DRE-7 AND AT WALL FACING M-140 COMPLEX.
2. EXIT DISCHARGE THROUGH PASSAGEWAY. SEE SITE PACKAGE SHEET LS-101 FOR PASSAGEWAY LAYOUT.

SYM	DESCRIPTION	DATE	APPR
0	ISSUED FOR CONSTRUCTION	10/28/2016	CBC

NAVFAC

STATE OF MAINE
EMILY PINYARD
No. 12126
LICENSED
PROFESSIONAL ENGINEER
10/28/16
SEAL

Colby Company engineering
A/E INFO

APPROVED
Digitally Signed by Daniel W. Greenfield
FOR COMMANDER NAVFAC

ACTIVITY
TIM FISHER
C. 2370.6 BRANCH HEAD

SATISFACTORY TO DATE 10/28/2016
DES ERP DRW CSS CHK WEP
PMDM PETER STOCKLESS
BRANCH MANAGER IAN BODWELL
FEA/DPM&E AMIN BAHROUR
FIRE PROTECTION PATRICK BAKAJ

DEPARTMENT OF THE NAVY
NAVAL FACILITIES ENGINEERING COMMAND
PUBLIC WORKS DEPARTMENT, MAINE
NAVAL FACILITIES ENGINEERING COMMAND ~ MID-ATLANTIC
NAVAL SHIPYARD, PORTSMOUTH, NH
PORTSMOUTH NAVAL SHIPYARD
KITTERY, ME
DRY DOCK #1 DEFUELING COMPLEX
DRE-7
GROUND LEVEL LIFE SAFETY PLAN

EPROJECT NO.: 1363311
CONSTR. CONTR. NO. N40085-17-C-5002
NAVFAC DRAWING NO. 12734983
SHEET 12 OF 117
LS-100A | DD1-16-1064

DRAWFORM REVISION: 10 OCTOBER 2014

0 2' 4' 8'
Scale: 1/4" = 1'-0"

10/28/2016 6:56:35 AM X:\297 PORTSMOUTH NAVAL SHIPYARD\297.005.001 - DD#1 DEFUELING COMPLEX DESIGN\DRAWINGS\DRE7\SHEETS\LS-100A.DWG

NOTES

1. SEE SHEET LS-001 FOR ABBREVIATIONS AND GENERAL NOTES.

KEYED NOTES

1 THIS DISTANCE IS BELOW THE ALLOWABLE COMMON PATH OF TRAVEL OF 50-FEET SO A SINGLE EXIT IS PERMITTED FROM THIS LEVEL PER NFPA 101.

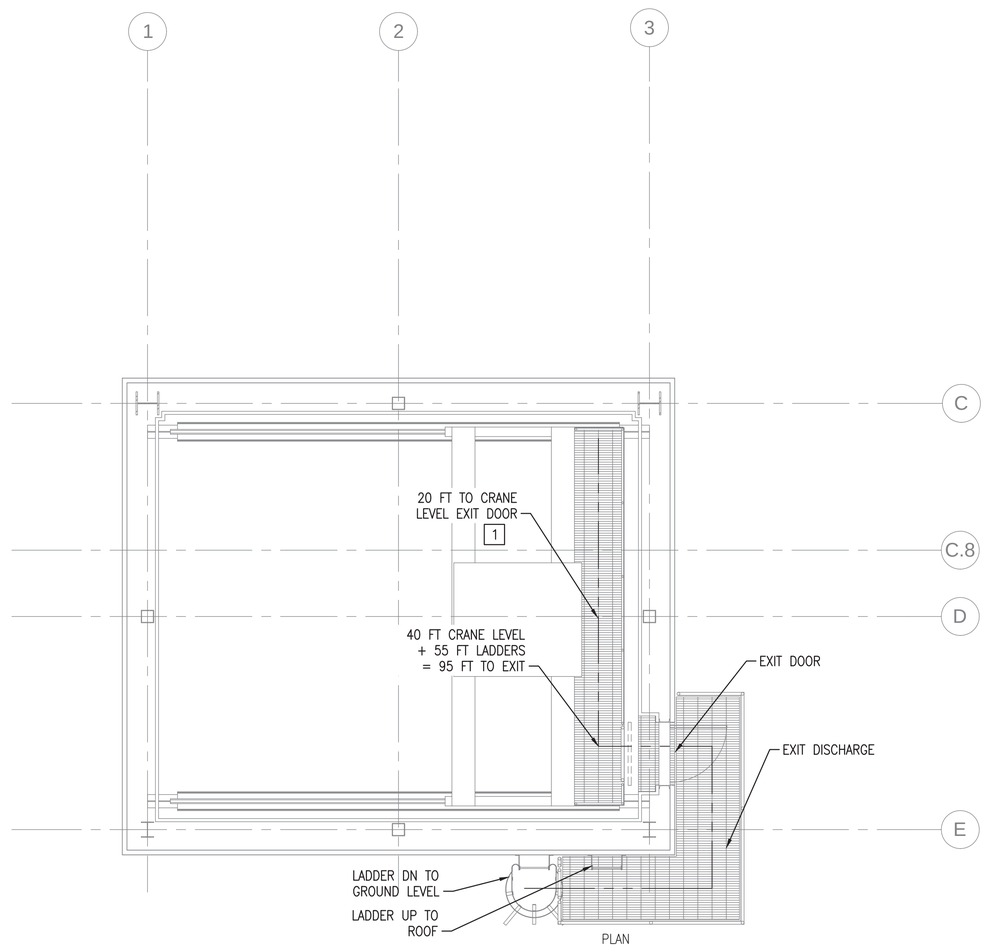

CRANE LEVEL LIFE SAFETY PLAN

SCALE: 1/4" = 1'-0"

0 2' 4' 8'
Scale: 1/4" = 1'-0"

SYM	DESCRIPTION	DATE	APPR
0	ISSUED FOR CONSTRUCTION	10/28/2016	CBC

STATE OF MAINE
EMILY PINYARD
No. 12126
LICENSED
PROFESSIONAL ENGINEER
10/28/16
SEAL

Colby Company engineering
A/E INFO

APPROVED
Daniel W. Greenfield
FOR COMMANDER NAVFAC

ACTIVITY
TIM FISHER
C. 2370.6 BRANCH HEAD

SATISFACTORY TO DATE 10/28/2016

DES ERP | DRW CSS | CHK WEP

PM/DM PETER STOCKLESS
BRANCH MANAGER IAN BODWELL
FEA/DP/M&E AMIN BAHROUR
FIRE PROTECTION PATRICK BAKAJ

DEPARTMENT OF THE NAVY
NAVAL FACILITIES ENGINEERING COMMAND
PUBLIC WORKS DEPARTMENT - MAINE

NAVAL FACILITIES ENGINEERING COMMAND – MID-ATLANTIC
NAVAL SHIPYARD - PORTSMOUTH, NH

PORTSMOUTH NAVAL SHIPYARD
KITTERY, ME

DRY DOCK #1 DEFUELING COMPLEX
DRE-7

CRANE LEVEL LIFE SAFETY PLAN

EPROJECT NO.: 1363311
CONSTR. CONTR. NO. N40085-17-C-5002
NAVFAC DRAWING NO. 12734984
SHEET 13 OF 117

LS-101 | DD1-16-1065

DRAWFORM REVISION: 10 OCTOBER 2014

10/28/2016 6:56:39 AM X:\297 PORTSMOUTH NAVAL SHIPYARD\297.005.001 - DD#1 DEFUELING COMPLEX DESIGN\DRAWINGS\DRE7\SHEETS\LS-101.DWG

ABBREVIATIONS

AFF	ABOVE FINISH FLOOR
APPROX.	APPROXIMATELY
ARCH	ARCHITECTURAL
℄	BUILDING LINE
BLDG.	BUILDING
BOT.	BOTTOM
B.O.	BOTTOM OF
℄	CENTER LINE
C.J.	CONTROL JOINT
CLR	CLEAR
CP	COLUMN PLATE
COL.	COLUMN
CONC	CONCRETE
CONN	CONNECTION
CONT.	CONTINUOUS
DBL.	DOUBLE
DTL.	DETAIL
DIA., ø	DIAMETER
DIM.	DIMENSION
DN	DOWN
DWG.	DRAWING
EA.	EACH
EMBED	EMBEDMENT
EL.	ELEVATION
E.O.D.	EDGE OF DECK (ROOF PLATE)
EQ.	EQUAL
EQUIP.	EQUIPMENT
EXIST.	EXISTING
EXT.	EXTERIOR
EW	EACH WAY
FDN	FOUNDATION
FFE	FINISH FLOOR ELEVATION
FIN.	FINISH
FLR.	FLOOR
F.S.	FAR SIDE
FT	FEET
GA.	GAGE
GALV.	GALVANIZED
GEN.	GENERAL
GR	GRADE
H	HORIZONTAL FORCE
HORIZ.	HORIZONTAL
HSS	HOLLOW STRUCTURAL SECTION
HT.	HEIGHT
I.D.	INSIDE DIAMETER
IMP	INSULATED METAL PANEL
IN.	INCH
INT.	INTERIOR
LB	POUNDS
LG	LONG
M or Mx	MOMENT FORCE ABOUT STRONG AXIS
My	MOMENT FORCE ABOUT WEAK AXIS
MANUF.	MANUFACTURER
MAX.	MAXIMUM
MECH.	MECHANICAL
MIN.	MINIMUM
N.S.	NEAR SIDE
NTS	NOT TO SCALE
O.C.	ON CENTER
O.D.	OUTSIDE DIAMETER
ℙ	PLATE
R, RAD.	RADIUS
REF	REFERENCE
REQ'D, REQ.	REQUIRED
R.O.	ROUGH OPENING
RTU	ROOF TOP UNIT (MECHANICAL)
S.S.	STAINLESS STEEL
SCH.	SCHEDULE
SECT.	SECTION
SHT.	SHEET
SIM.	SIMILAR
SPEC.	SPECIFICATION
SQ.	SQUARE
STD	STANDARD
STIFF	STIFFENER
T	TORSIONAL FORCE
T&B	TOP AND BOTTOM
T.O.	TOP OF
T.O.S.	TOP OF STEEL
THRU	THROUGH
TYP.	TYPICAL
U.N.O.	UNLESS NOTED OTHERWISE
V	VERTICAL SHEAR FORCE
VERT.	VERTICAL
VIF	VERIFY IN FIELD
W/	WITH
W.P.	WORK POINT
WWF	WELDED WIRE FABRIC

— — — DIAGONAL BRACE

▶———— MOMENT CONNECTION

—○——○— GUARDRAIL & TOE PLATE

GENERAL NOTES

DESIGN LOADING (2012 IBC/UFC 3-301-01):

SNOW LOADS

GROUND SNOW LOAD, Pg:	50 PSF
EXPOSURE FACTOR, Ce:	0.9
THERMAL FACTOR, Ct:	1.1
IMPORTANCE FACTOR, I:	1.2
ROOF SNOW LOAD, Pf:	42 PSF

WIND LOADS

ULTIMATE WIND SPEED:	132 MPH
EXPOSURE:	C
RISK CATEGORY:	II*
INTERNAL PRESSURE COEFFICIENT	GCpi = ±0.18
C & C WALL LOADS:	+ 43.0/−75.4 PSF WITHIN 3' OF EDGE + 43.0/−44.3 PSF @ FIELD

SEISMIC LOADS

SITE CLASSIFICATION:	A
SEISMIC DESIGN CATEGORY:	A
RISK CATEGORY	II*
SEISMIC IMPORTANCE FACTOR:	1.5
0.2 SEC. SPECTRAL RESPONSE, Ss:	0.27g
1 SEC. SPECTRAL RESPONSE, S1:	0.08g
SEISMIC RESISTING SYSTEM:	STEEL SYSTEMS NOT SPECIFICALLY DETAILED FOR SEISMIC RESISTANCE (BRACED FRAME)
RESPONSE MODIFICATION FACTOR, R:	3.0
SEISMIC RESPONSE COEFFICIENT, Cs:	0.01
DESIGN BASE SHEAR:	2K
SEISMIC ANALYSIS PROCEDURE:	EQUIVALENT LATERAL FORCE PROCEDURE

* PER IBC & ASCE-7, RISK CATEGORY OF DEFUELING FACILITY HAS BEEN SET AT II, AS A CONSERVATIVE MEASURE THE BUILDING DESIGN HAS ASSUMED A RISK CATEGORY OF IV.

EXTERIOR PLATFORMS

EXTERIOR METAL STAIRS LIVE LOAD	100 PSF
ELEVATED PLATFORM LIVE LOAD	100 PSF
SNOW LOAD	50 PSF

INTERIOR SLAB LOADS

SLAB LIVE LOAD	250 PSF

EXTERIOR SLAB LOADS

SLAB LIVE LOAD	100 PSF
ISO CONTAINER	5,000 LB TARE 20,000 LB LOAD

STORAGE ANNEX & EQUIPMENT SERVICE STAND AREA

SLAB LIVE LOAD (EXCLUDING LOADS GIVEN BELOW)	1200 PSF

NOTE: THE FOLLOWING LOADS DO NOT REPRESENT ALL LOADING SCENARIOS BUT REPRESENT THE WORST CASE FOR THE DESIGN OF THE CONCRETE SLAB ON GRADE.

EQUIPMENT SERVICE STAND:

TOTAL LOAD TO BOTH RAILS = 120K (MAXIMUM WEIGHT OF EQUIPMENT ON STAND IS 95,000 LBS)

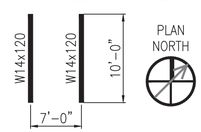

1. THE NOTES ON THESE DRAWINGS ARE NOT INTENDED TO REPLACE SPECIFICATIONS. SEE SPECIFICATIONS FOR REQUIREMENTS IN ADDITION TO GENERAL NOTES. INCONSISTENCIES BETWEEN THESE DRAWINGS AND THE SPECIFICATIONS SHALL BE BROUGHT TO THE ATTENTION OF THE GOVERNMENT FOR RESOLUTION PRIOR TO PROCEEDING WITH THE AFFECTED PORTION OF THE WORK.

2. STRUCTURAL DRAWINGS SHALL BE USED IN CONJUNCTION WITH JOB SPECIFICATIONS AND ARCHITECTURAL, STRUCTURAL, MECHANICAL, ELECTRICAL, PLUMBING, SITE DRAWINGS & GEOTECHNICAL SPECIFICATIONS. CONSULT THESE DRAWINGS FOR LOCATIONS AND DIMENSIONS OF OPENINGS, CHASES, INSERTS, REGLETS, SLEEVES, DEPRESSIONS, AND OTHER DETAILS NOT SHOWN ON STRUCTURAL DRAWINGS.

GENERAL NOTES (CONT)

3. ALL DIMENSIONS AND CONDITIONS SHALL BE VERIFIED IN THE FIELD. ANY DISCREPANCIES SHALL BE BROUGHT TO THE ATTENTION OF THE GOVERNMENT FOR RESOLUTION BEFORE PROCEEDING WITH THE AFFECTED PART OF THE WORK.

4. THE STRUCTURE IS DESIGNED TO BE SELF SUPPORTING AND STABLE ONLY AFTER THE STRUCTURAL WORK CONTAINED IN THE DRAWINGS IS COMPLETED. IT IS THE CONTRACTOR'S SOLE RESPONSIBILITY TO DETERMINE ERECTION PROCEDURES AND SEQUENCE TO ENSURE THE SAFETY OF THE BUILDING AND ITS COMPONENTS DURING ERECTION. THIS INCLUDES THE ADDITION OF NECESSARY SHORING, SHEETING, TEMPORARY BRACING, GUYS OR TIEDOWNS. SUCH MATERIAL SHALL REMAIN THE PROPERTY OF THE CONTRACTOR AFTER COMPLETION OF THE PROJECT.

5. SECTIONS AND DETAILS SHOWN ON ANY STRUCTURAL DRAWINGS SHALL BE CONSIDERED TYPICAL FOR SIMILAR CONDITIONS.

6. THE CONTRACTOR SHALL SUBMIT COMPLETE SHOP DRAWINGS FOR ALL PARTS OF THE WORK, INCLUDING DESCRIPTION OF SHORING, AND CONSTRUCTION METHODS AND SEQUENCING WHERE APPLICABLE. NO PERFORMANCE OF THE WORK, SHALL COMMENCE WITHOUT REVIEW AND APPROVAL OF THE SHOP DRAWINGS BY NAVFAC, PNSY. THE CONTRACTOR SHALL INDICATE ON THE SHOP DRAWINGS WHICH PORTIONS OF THE WORK ARE TO BE PERFORMED OFF SITE AND WHICH PORTIONS WILL BE PERFORMED AT THE SITE.

7. ALL APPLICABLE FEDERAL, STATE, AND MUNICIPAL REGULATIONS SHALL BE FOLLOWED, INCLUDING THE FEDERAL DEPARTMENT OF LABOR OCCUPATIONAL SAFETY AND HEALTH ADMINISTRATION.

8. REFER TO SPECIFICATIONS FOR REQUIRED STRUCTURAL TESTS AND SPECIAL INSPECTIONS.

9. DATUM TOP OF FOUNDATION, ELEVATION 10'-7" = MODULE ELEVATION 0'-0".

COLD FORMED LIGHT GAUGE STEEL FRAMING

1. COLD FORMED STEEL FRAMING MEMBERS SHALL BE OF THE TYPE, SHAPE, SIZE, GAUGE, AND SPACING AS SHOWN ON THE DRAWINGS. MEMBER TYPES AND SIZES SHOWN ON THE DRAWINGS REFER TO MEMBERS MANUFACTURED BY THE DIETRICH INDUSTRIES, INC. MEMBERS EQUIVALENT IN SHAPE, SIZE, STIFFNESS, AND STRENGTH BY OTHER MANUFACTURERS MAY BE SUBSTITUTED FOR FRAMING MEMBERS SHOWN. ALTERNATE MEMBERS SHALL BE SUBJECT TO REVIEW AND APPROVAL BY NAVFAC, PNSY PRIOR TO FABRICATION AND ERECTION.

2. ALL COLD FORMED STEEL FRAMING SHALL CONFORM TO THE ANSI SPECIFICATION FOR THE DESIGN OF COLD-FORMED STRUCTURAL MEMBERS.

3. COLD FORMED STRUCTURAL TRACKS AND STUDS 12, 14 AND 16 GAUGE MATERIALS SHALL BE FORMED WITH ASTM A446, GRADE D OR ASTM A570, GRADE 50 STEEL WITH A MINIMUM FY=50 KSI. COLD-FORMED STRUCTURAL TRACKS AND STUDS 18 GAUGE AND LIGHTER SHALL BE FORMED FROM ASTM A446, GRADE A OR ASTM A570, GRADE 33 GALVANIZED. FASTENINGS SHALL BE AS SHOWN ON THE DRAWINGS. FASTENINGS NOT SHOWN SHALL BE AS RECOMMENDED BY THE MANUFACTURER.

4. SHEET STEEL SHALL BE AS FOLLOWS:
   a. JOISTS, GIRTS — ASTM A1003/A1003A STRUCTURAL QUALITY, Fy=50ksi, G60 GALVANIZING

5. CONTRACTOR SHALL PROVIDE STANDARD STEEL BLOCKING, BRIDGING, CLIP ANGLES, REINFORCEMENTS AND ACCESSORIES. ACCESSORIES SHALL BE AS RECOMMENDED BY FRAMING MANUFACTURER FOR APPLICATIONS INDICATED AND AS REQUIRED TO PROVIDE A COMPLETE FRAMING SYSTEM.

6. JOINTS SHALL UTILIZE ASTM A325 BOLTS OR ASTM C1513 SELF TAPPING SCREWS, SIZED TO SUIT APPLICATION AND LOADS INDICATED.

7. WELDING ELECTRODES SHALL COMPLY WITH AWS STANDARDS, AND ALL WELD PROCEDURES SHALL BE ACCOMPLISHED IN ACCORDANCE WITH AWS D1.3.

8. USE ZINC RICH PAINT PER ASTM A780 FOR TOUCH UP AND REPAIR OF GALVANIZED SURFACES.

CRANE RAIL DESIGN

1. COMPLY WITH SPEC 05-12-00

2. RAIL ALIGNMENT & LEVELNESS SHALL COMPLY WITH SPECIFICATION SECTION 05 12 00 AND 05 59 10.

3. CRANE RAIL DESIGN LOADS (NOT INCLUDING IMPACT):

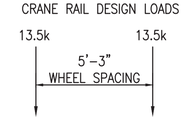

STRUCTURAL STEEL NOTES

1. STRUCTURAL STEEL FABRICATION, ERECTION, AND CONNECTION DESIGN SHALL CONFORM TO AISC'S "SPECIFICATION FOR THE DESIGN, FABRICATION, AND ERECTION OF STRUCTURAL STEEL" 14TH EDITION.

2. STEEL FABRICATION AND ERECTION SHALL CONFORM TO AISC "CODE OF STANDARD PRACTICE FOR STEEL BUILDINGS AND BRIDGES" AISC-303

3. STRUCTURAL STEEL SHALL CONFORM TO THE FOLLOWING:
   a. WIDE FLANGE SHAPES — ASTM A992
   b. CHANNELS @ CRANE RUNWAY — ASTM A572, GRADE 50
   c. PLATES AND OTHER SHAPES — ASTM A36
   d. SQUARE & RECTANGULAR TUBING — ASTM A500, GRADE B, Fy=46
   e. ROUND PIPES AND TUBING — ASTM A53, GRADE B
   f. ANCHOR RODS — ASTM F1554, GRADE 36
   g. HEADED STUDS — ASTM A108
   h. CRANE RAILS — ASTM A759
   i. ROLLED FLOOR PLATE — ASTM A756 OR A36

4. FIELD CONNECTIONS SHALL BE BOLTED USING ASTM A325 OR A490 HIGH STRENGTH BOLTS, UNLESS NOTED OTHERWISE.

5. U.N.O. BOLTS ARE BEARING-TYPE AND MAY BE EITHER SNUG TIGHTENED OR FULLY TENSIONED. BOLT HOLES SHALL BE STANDARD SIZES UNLESS OTHERWISE APPROVED BY THE ENGINEER OF RECORD.

6. WELDING SHALL CONFORM TO AWS D1.1. WELDING ELECTRODES SHALL COMPLY WITH AWS REQUIREMENTS.

7. THE DESIGN OF CONNECTIONS NOT SHOWN ON THE DRAWINGS SHALL BE PROVIDED BY THE FABRICATOR. CONNECTIONS SHALL BE DESIGNED FOR THE FORCES SHOWN. CONNECTIONS SHALL BE DESIGNED IN ACCORDANCE WITH AISC MANUAL OF STEEL CONSTRUCTION 14TH EDITION. DESIGN CALCULATIONS SHALL BE PREPARED BY A PROFESSIONAL ENGINEER REGISTERED IN THE STATE OF MAINE. SUBMIT SEALED CALCULATIONS WITH SHOP DRAWINGS.

8. ALL STEEL SHALL BE FABRICATED AND SHIPPED AS SHOP PRIMED & PAINTED STEEL UNLESS NOTED OTHERWISE.

9. STEEL MEMBERS SHALL BE CUT FROM FULL LENGTH STOCK. UNAUTHORIZED SPLICES WILL BE CAUSE FOR REJECTION.

10. GUARDRAIL SHALL BE CONTINUOUS AND SHALL MEET OSHA REQUIREMENTS. GUARDRAIL MAY NOT BE SHOWN AS CONTINUOUS FOR GRAPHICAL REPRESENTATION PURPOSES.

11. BEAM END FORCES:

10.1 MINIMUM SHEAR FORCES (UNLESS NOTED OTHERWISE):

W8 – 10 KIPS	C7 – 10 KIPS	HSS12x8 – 15 KIPS
W10 – 20 KIPS	C6 – 10 KIPS	HSS8x4 – 10 KIPS
W14 – 25 KIPS	C10 – 20 KIPS	
W21 – 40 KIPS	MC18 – 40 KIPS	

10.2 MINIMUM AXIAL FORCES (UNLESS NOTED OTHERWISE):
ALL END CONNECTIONS SHALL BE CAPABLE OF RESISTING AN AXIAL FORCE OF 5 KIPS IN BOTH TENSION AND COMPRESSION. THIS SHALL BE IN COMBINATION WITH OTHER FORCES LISTED HERE AND POSTED ON THE DRAWINGS.

10.3 MINIMUM HORIZONTAL FORCES (UNLESS NOTED OTHERWISE):
ALL END CONNECTIONS (EXCEPT HORIZONTAL AND VERTICAL BRACING) SHALL BE CAPABLE OF RESISTING A HORIZONTAL/OUT-OF-PLANE/TRANVERSE FORCE OF 5 KIPS IN COMBINATION WITH OTHER FORCES LISTED HERE AND POSTED ON THE DRAWINGS.

10.4 XXX KIPS DENOTES AN AXIAL TRANSFER FORCE. TRANSFER FORCES SHALL BE CONSIDERED REVERSIBLE AND ARE IN ADDITION TO OTHER FORCES LISTED HERE.

10.5 ALL LOADS GIVEN ABOVE AND POSTED ON THE DRAWINGS ARE UNFACTORED (ASD).

METAL GRATING NOTES

1. GALVANIZED STEEL GRATING BEARING BARS SHALL CONFORM TO ASTM 569. CROSS BARS SHALL BE OF ASTM A510 CARBON STEEL RODS. HOT DIPPED GALVANIZING SHALL BE IN ACCORDANCE WITH ASTM A123.

2. GRATING SHALL BE INSTALLED USING THE WIDEST MANAGEABLE PANEL SECTIONS POSSIBLE, BUT NO LESS THAN 24" WIDE PANELS.

3. ALL OPENINGS IN GRATING LARGER THAN 6" SHALL BE BANDED.

4. UNLESS NOTED OTHERWISE, GRATING SHALL BE SECURELY FASTENED TO THE STRUCTURAL SUPPORTS BY SELF DRILLING/SELF TAPPING SCREWS w/ PRE-DRILLED HOLES. FASTENER LOCATIONS SHALL BE TOUCH-UP PAINTED OR COLD GALVANIZED AS REQUIRED.

5. CONNECTIONS NOT DETAILED SHALL BE DESIGNED AS AISC TYPE II AND SHALL BE DESIGNED FOR 1/2 OF THE MAXIMUM UNIFORM ALLOWABLE LOAD.

SYM	DESCRIPTION	DATE	APPR
0	ISSUED FOR CONSTRUCTION	10/28/2016	CBC

NAVFAC

STATE OF MAINE — BRIAN J. BEAULIEU No. 12004 — LICENSED PROFESSIONAL ENGINEER — 10/28/16 — SEAL

Colby Company engineering — A/E INFO

APPROVED (Contracting Officer) — FOR COMMANDER NAVFAC

ACTIVITY: TIM FISHER, C. 2370.6 BRANCH HEAD

SATISFACTORY TO — DATE 10/28/2016

DES SJT | DRW ERB | CHK CBC

PMDM: PETER STOCKLESS

BRANCH MANAGER: IAN BODWELL

READIPMAE: AMIN BAHROUR

FIRE PROTECTION: PATRICK BAKAJ

DEPARTMENT OF THE NAVY — NAVAL FACILITIES ENGINEERING COMMAND — PUBLIC WORKS DEPARTMENT - MAINE

NAVAL FACILITIES ENGINEERING COMMAND ~ MID-ATLANTIC — NAVAL SHIPYARD - PORTSMOUTH, NH

PORTSMOUTH NAVAL SHIPYARD — KITTERY, ME

DRY DOCK #1 DEFUELING COMPLEX DRE-7

STRUCTURAL GENERAL NOTES SHEET

EPROJECT NO.: 1363311

CONSTR. CONTR. NO.: N40085-17-C-5002

NAVFAC DRAWING NO.: 12734985

SHEET 14 OF 117

S-001 | DD1-16-1066

DRAWFORM REVISION: 10 OCTOBER 2014

10/28/2016 6:56:42 AM X:\297 PORTSMOUTH NAVAL SHIPYARD\297.005.001 - DD#1 DEFUELING COMPLEX DESIGN\DRAWINGS\DRE7\SHEETS\S-001.DWG

FRAMING LEGEND

DENOTES 1/4" STEEL PLATE. SLIP RESISTANT EXTERIOR SURFACE SHALL BE APPLIED TO REGIONS CONTAINED BY GUARDRAILS, SEAM WELDED TO ADJACENT PLATES, INTERMITTENT WELDS TO STRUCTURE BELOW EXCEPT SEAM WELDED WHERE REQUIRED FOR WEATHER RESISTANCE.

( ) DENOTES STEEL ELEVATION DIFFERENCE FROM T.O.S. REF. IN PLAN TITLE

DENOTES MOMENT CONNECTION

W8 W8x24 HEADER GIRT

NOTES

1. SEE S-001 FOR NOTES.
2. SUPPLEMENTAL STEEL FOR DUCT SUPPORT NOT SHOWN HERE. SEE MECHANICAL DRAWINGS FOR MORE INFORMATION.

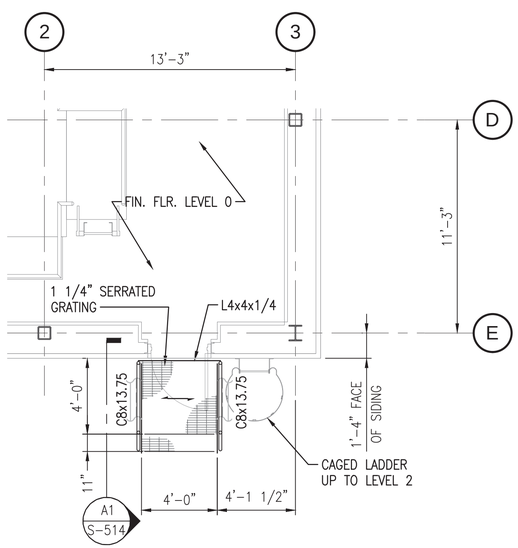

PARTIAL FRAMING PLAN AT GROUND LEVEL

SCALE: 1/4" = 1'-0"

PLAN NORTH

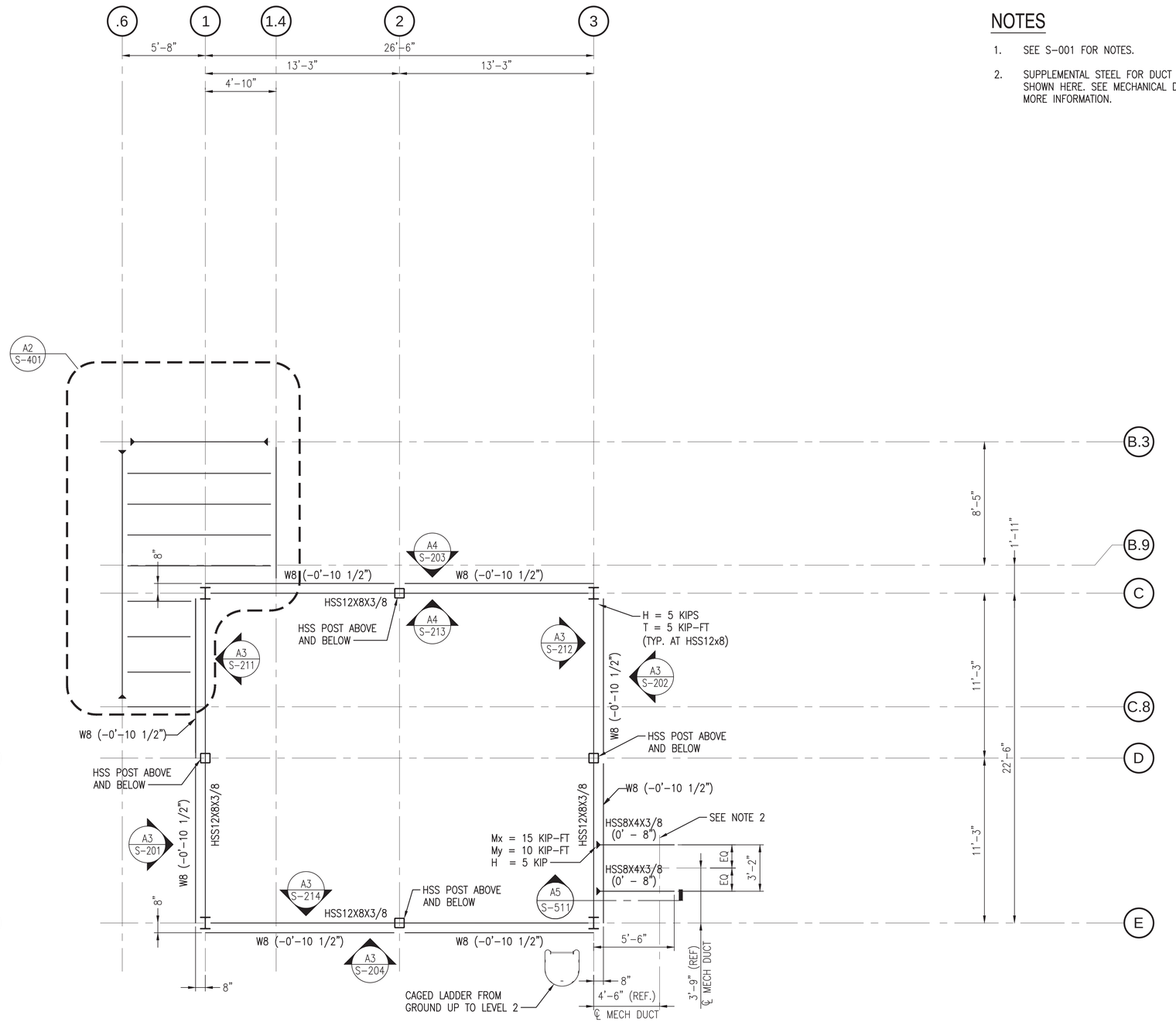

FRAMING PLAN AT LEVEL 1 (NO STORAGE ANNEX)

SCALE:1/4" = 1'-0"

T.O.S. EL. 16'-0" U.N.O.

PLAN NORTH

0 2' 4' 8'
Scale: 1/4" = 1'-0"

SYM	DESCRIPTION	DATE	APPR
0	ISSUED FOR CONSTRUCTION	10/28/2016	CBC

NAVFAC

STATE OF MAINE
BRIAN J. BEAULIEU
No. 12004
LICENSED PROFESSIONAL ENGINEER
10/28/16
SEAL

Colby Company engineering
A/E INFO

APPROVED
Daniel W. Greenfield
FOR COMMANDER NAVFAC

ACTIVITY
TIM FISHER
C. 2370.6 BRANCH HEAD

SATISFACTORY TO DATE 10/28/2016
DES DS DRW ERB CHK CBC
PMDM PETER STOCKLESS
BRANCH MANAGER IAN BODWELL
FEA/DPM&E AMIN BAHROUR
FIRE PROTECTION PATRICK BAKAJ

DEPARTMENT OF THE NAVY
NAVAL FACILITIES ENGINEERING COMMAND
PUBLIC WORKS DEPARTMENT - MAINE
NAVAL FACILITIES ENGINEERING COMMAND ~ MID-ATLANTIC
NAVAL SHIPYARD - PORTSMOUTH, NH
PORTSMOUTH NAVAL SHIPYARD
KITTERY, ME
DRY DOCK #1 DEFUELING COMPLEX
DRE-7
FRAMING PLAN AT LEVEL 1 (NO STORAGE ANNEX)

EPROJECT NO.: 1363311
CONSTR. CONTR. NO. N40085-17-C-5002
NAVFAC DRAWING NO. 12734986
SHEET 15 OF 117
S-101 DD1-16-1067

DRAWFORM REVISION: 10 OCTOBER 2014

10/28/2016 6:56:47 AM X:\297 PORTSMOUTH NAVAL SHIPYARD\297.005.001 - DD#1 DEFUELING COMPLEX DESIGN\DRAWINGS\DRE7\SHEETS\S-101.DWG

FRAMING LEGEND

▒	DENOTES 1/4" STEEL PLATE. SLIP RESISTANT EXTERIOR SURFACE SHALL BE APPLIED TO REGIONS CONTAINED BY GUARDRAILS, SEAM WELDED TO ADJACENT PLATES, INTERMITTENT WELDS TO STRUCTURE BELOW EXCEPT SEAM WELDED WHERE REQUIRED FOR WEATHER RESISTANCE.
J1	DENOTES 400S300-54 (-0'-10"). STEEL STUD C-SHAPE. ATTACH TO C8 AT EACH INTERSECTION.
( )	DENOTES STEEL ELEVATION DIFFERENCE FROM T.O.S. REF. IN PLAN TITLE
W8	W8x24 HEADER GIRT
W14	W14x26 W/L4x4x1/4
W21	W21x93
C8	C8x11.5
C10	C10x20
*	DENOTES MEMBERS WITH SKEWED WEBS TO MATCH ROOF SLOPE.

NOTES

1. SEE S-001 FOR NOTES.
2. CHANNEL TOES SHALL BE POINTED TO THE NORTH OR EAST (U.N.O.)
3. SUPPLEMENTAL STEEL FOR DUCT SUPPORT NOT SHOWN HERE. SEE MECHANICAL DRAWINGS FOR MORE INFORMATION.

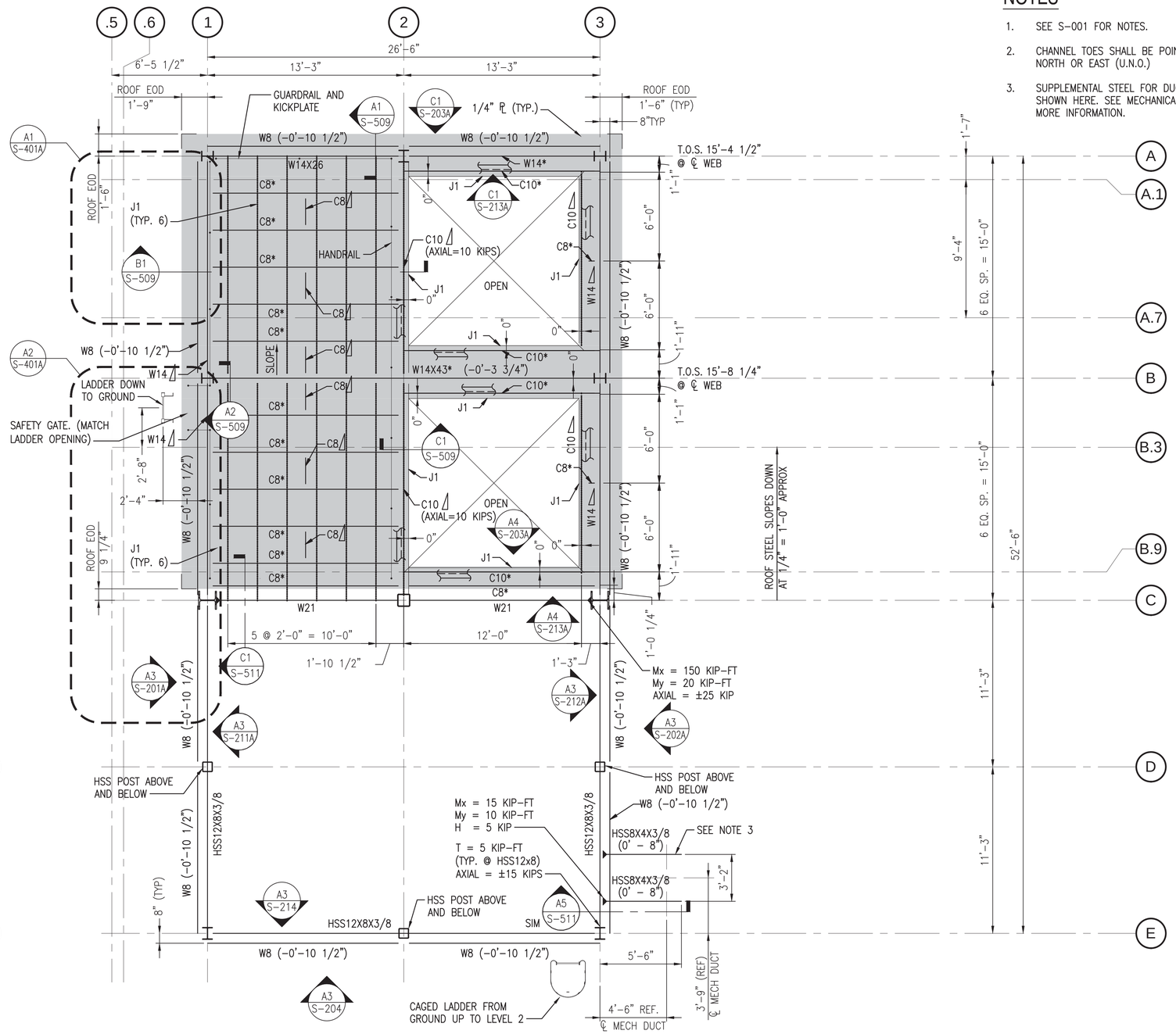

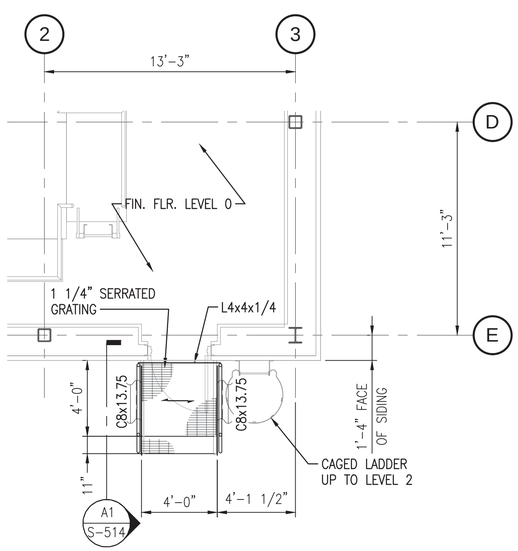

PARTIAL FRAMING PLAN AT GROUND LEVEL

SCALE: 1/4" = 1'-0"

PLAN NORTH

FRAMING PLAN AT LEVEL 1

SCALE:1/4" = 1'-0"

T.O.S. EL. 16'-0" U.N.O.

ROOF LIVE LOAD = 20 PSF (SEE S-001 FOR DESIGN SNOW LOAD)

PLAN NORTH

Scale: 1/4" = 1'-0"

SYM	DESCRIPTION	DATE	APPR
0	ISSUED FOR CONSTRUCTION	10/28/2016	CBC

NAVFAC

STATE OF MAINE — BRIAN J. BEAULIEU No. 12004 — LICENSED PROFESSIONAL ENGINEER — 10/28/16 — SEAL

Colby Company engineering — A/E INFO

APPROVED (Signature) — FOR COMMANDER NAVFAC

ACTIVITY: TIM FISHER, C. 2370.6 BRANCH HEAD

SATISFACTORY TO — DATE 10/28/2016

DES	DS	DRW ERB	CHK CBC
PMDM	PETER STOCKLESS		
BRANCH MANAGER	IAN BODWELL		
FEAD/PMAE	AMIN BAHROUR		
FIRE PROTECTION	PATRICK BAKAJ		

DEPARTMENT OF THE NAVY — NAVAL FACILITIES ENGINEERING COMMAND — PUBLIC WORKS DEPARTMENT - MAINE

NAVAL FACILITIES ENGINEERING COMMAND ~ MID-ATLANTIC — NAVAL SHIPYARD - PORTSMOUTH, NH

PORTSMOUTH NAVAL SHIPYARD — KITTERY, ME

DRY DOCK #1 DEFUELING COMPLEX DRE-7

FRAMING PLAN AT LEVEL 1

EPROJECT NO.: 1363311

CONSTR. CONTR. NO.: N40085-17-C-5002

NAVFAC DRAWING NO.: 12734987

SHEET 16 OF 117

S-101A | DD1-16-1068

DRAWFORM REVISION: 10 OCTOBER 2014

10/28/2016 6:56:52 AM X:\297 PORTSMOUTH NAVAL SHIPYARD\2297.005.001 - DD#1 DEFUELING COMPLEX DESIGN\DRAWINGS\DRE7\SHEETS\S-101A.DWG

FRAMING LEGEND

WT4	WT4x9 (−3" BELOW T.O.S. OF SUPPORT MEMBER) (AXIAL = ±10 KIPS)

NOTES

1. SEE S−001 FOR NOTES.
2. EXTEND LADDER CAGE RAILS TO PLATFORM GUARDRAILS.
3. SUPPLEMENTAL STEEL FOR DUCT SUPPORT NOT SHOWN HERE. SEE MECHANICAL DRAWINGS FOR MORE INFORMATION.

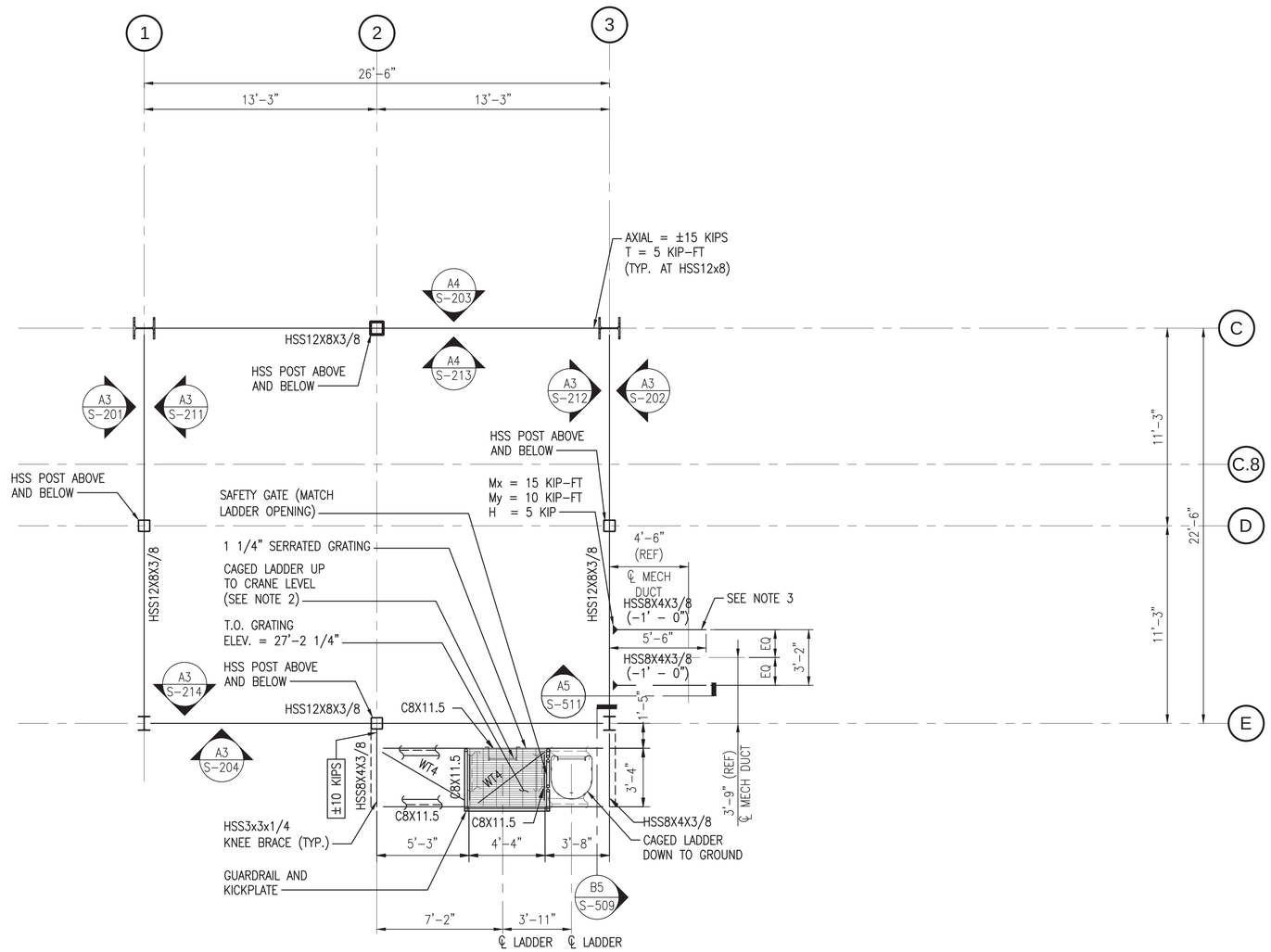

FRAMING PLAN AT LEVEL 2

SCALE:1/4" = 1'−0"

T.O.S. EL. 27'−1" U.N.O.
PLATFORM LIVE LOAD = 100 PSF

PLAN NORTH

0 2' 4' 8'
Scale: 1/4" = 1'−0"

SYM	DESCRIPTION	DATE	APPR
0	ISSUED FOR CONSTRUCTION	10/28/2016	CBC

NAVFAC

STATE OF MAINE
BRIAN J. BEAULIEU
No. 12004
LICENSED PROFESSIONAL ENGINEER
10/28/16
SEAL

Colby Company engineering
A/E INFO

APPROVED
Daniel W. Greenfield
FOR COMMANDER NAVFAC

ACTIVITY
TIM FISHER
C. 2370.6 BRANCH HEAD

SATISFACTORY TO DATE 10/28/2016
DES DS DRW ERB CHK CBC
PMDM PETER STOCKLESS
BRANCH MANAGER IAN BODWELL
FEAD/PMAE AMIN BAHROUR
FIRE PROTECTION PATRICK BAKAJ

DEPARTMENT OF THE NAVY
NAVAL FACILITIES ENGINEERING COMMAND
PUBLIC WORKS DEPARTMENT - MAINE

NAVAL FACILITIES ENGINEERING COMMAND ~ MID-ATLANTIC
NAVAL SHIPYARD - PORTSMOUTH, NH

PORTSMOUTH NAVAL SHIPYARD
KITTERY, ME

DRY DOCK #1 DEFUELING COMPLEX
DRE-7

FRAMING PLAN AT LEVEL 2

EPROJECT NO.: 1363311
CONSTR. CONTR. NO. N40085-17-C-5002
NAVFAC DRAWING NO. 12734988
SHEET 17 OF 117

S-102 DD1-16-1069

DRAWFORM REVISION: 10 OCTOBER 2014

10/28/2016 6:56:56 AM X:\297 PORTSMOUTH NAVAL SHIPYARD\297.005.001 - DD#1 DEFUELING COMPLEX DESIGN\DRAWINGS\DRE7\SHEETS\S-102.DWG

NOTES

1. SEE S-001 FOR NOTES.

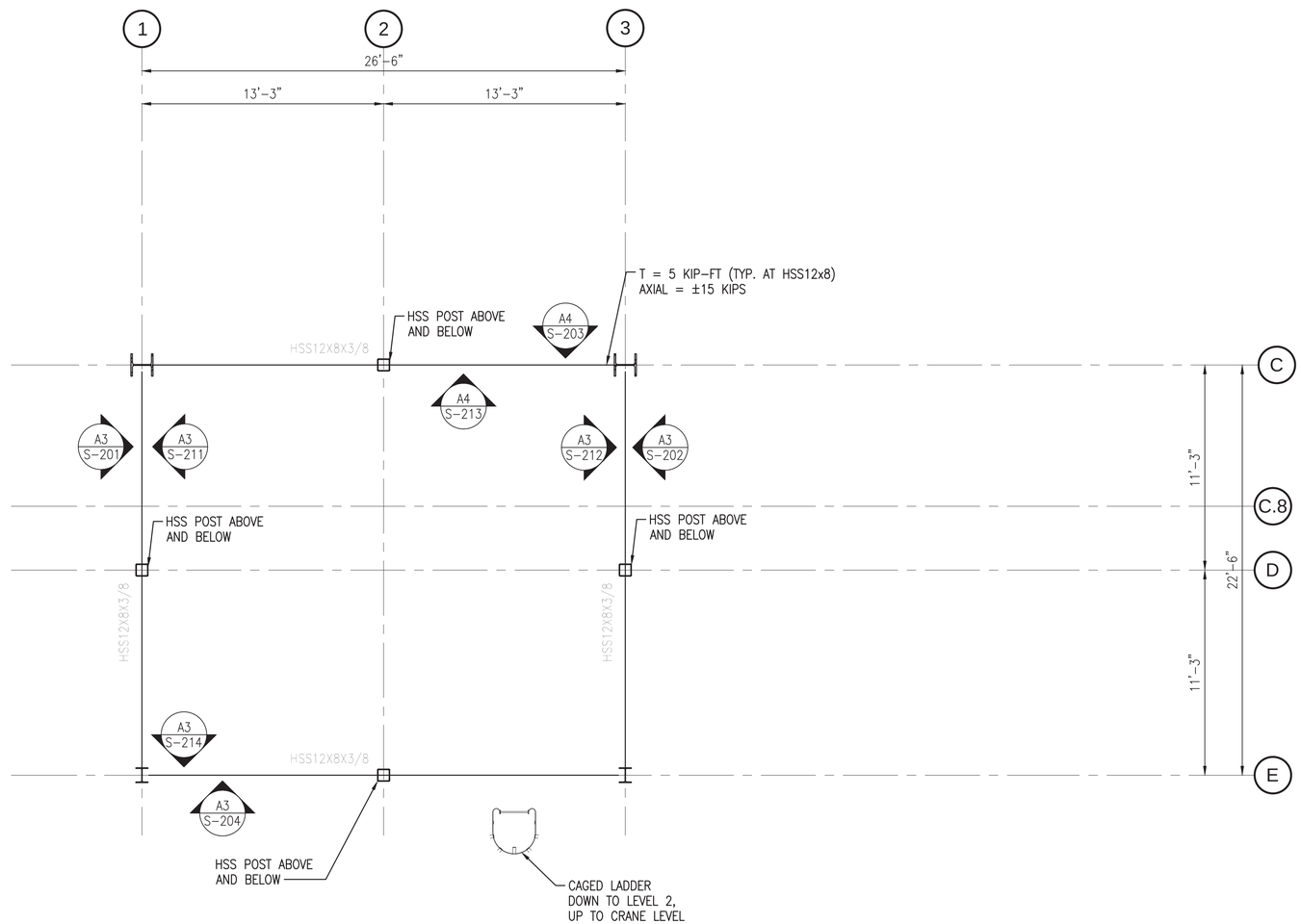

FRAMING PLAN AT LEVEL 3

SCALE:1/4" = 1'-0"

T.O.S. EL. 38'-2" U.N.O.

PLAN NORTH

0 2' 4' 8'
Scale: 1/4" = 1'-0"

SYM	DESCRIPTION	DATE	APPR
0	ISSUED FOR CONSTRUCTION	10/28/2016	CBC

NAVFAC

STATE OF MAINE
BRIAN J. BEAULIEU
No. 12004
LICENSED PROFESSIONAL ENGINEER
10/28/16
SEAL

Colby Company engineering
A/E INFO

APPROVED
Daniel W. Greenfield
FOR COMMANDER NAVFAC

ACTIVITY
TIM FISHER
C. 2370.6 BRANCH HEAD

SATISFACTORY TO DATE 10/28/2016

DES	DS	DRW	ERB	CHK	CBC

PMDM: PETER STOCKLESS
BRANCH MANAGER: IAN BODWELL
FEAD/PMAE: AMIN BAHROUR
FIRE PROTECTION: PATRICK BAKAJ

DEPARTMENT OF THE NAVY
NAVAL FACILITIES ENGINEERING COMMAND
PUBLIC WORKS DEPARTMENT - MAINE
NAVAL FACILITIES ENGINEERING COMMAND ~ MID-ATLANTIC
NAVAL SHIPYARD - PORTSMOUTH, NH
PORTSMOUTH NAVAL SHIPYARD
KITTERY, ME
DRY DOCK #1 DEFUELING COMPLEX
DRE-7
FRAMING PLAN AT LEVEL 3

EPROJECT NO.: 1363311
CONSTR. CONTR. NO. N40085-17-C-5002
NAVFAC DRAWING NO. 12734989
SHEET 18 OF 117

S-103 | DD1-16-1070

DRAWFORM REVISION: 10 OCTOBER 2014

10/28/2016 6:57:00 AM X:\297 PORTSMOUTH NAVAL SHIPYARD\297.005.001 - DD#1 DEFUELING COMPLEX DESIGN\DRAWINGS\DRE7\SHEETS\S-103.DWG

FRAMING LEGEND

WT4 WT4x9 (–3" BELOW T.O.S. OF SUPPORT MEMBER)
(AXIAL = ±10 – KIPS)

NOTES

1. SEE S–001 FOR NOTES.
2. SEE SPECIFICATIONS FOR ADDITIONAL FABRICATION & ERECTION TOLERANCE REQUIREMENTS AT CRANE RAIL.
3. FINAL LOCATION OF CRANE STOPS TO BE COORDINATED BY CRANE MANUFACTURER. ALLOW FOR CRANE STOPS TO BE FIELD LOCATED.

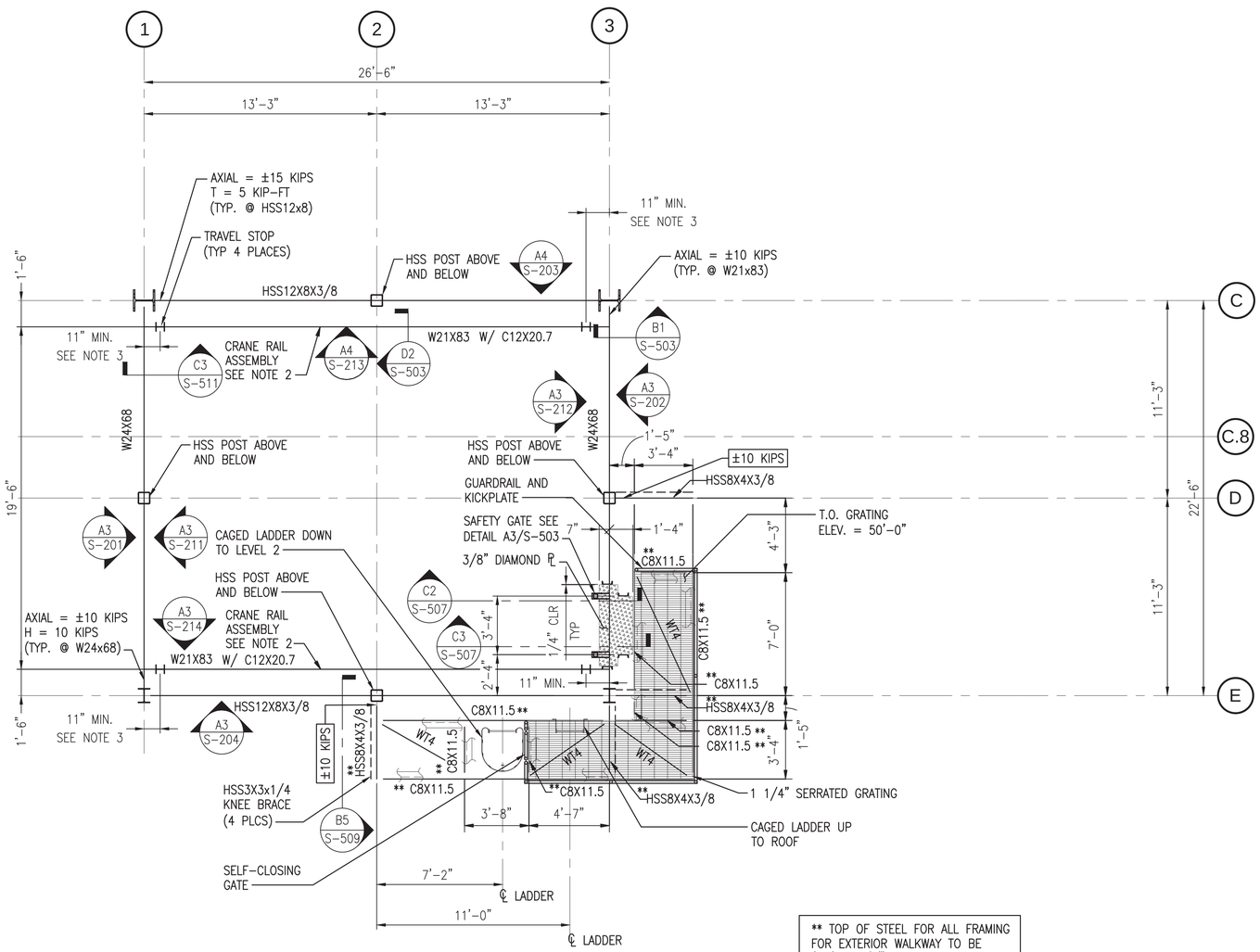

** TOP OF STEEL FOR ALL FRAMING FOR EXTERIOR WALKWAY TO BE (+1'–1 7/8") AT THIS PLAN LEVEL.

FRAMING PLAN AT CRANE RAIL

SCALE:1/4" = 1'–0"

T.O.S EL. 48'–8 7/8" U.N.O.
T.O. RAIL EL. 49'–0"
PLATFORM LIVE LOAD 100 P.S.F.

PLAN NORTH

0 2' 4' 8'
Scale: 1/4" = 1'–0"

SYM	DESCRIPTION	DATE	APPR
0	ISSUED FOR CONSTRUCTION	10/28/2016	CBC

NAVFAC

STATE OF MAINE
BRIAN J. BEAULIEU
No. 12004
LICENSED
PROFESSIONAL ENGINEER
10/28/16
SEAL

Colby Company engineering
A/E INFO

APPROVED
Signature
Daniel W. Greenfield
FOR COMMANDER NAVFAC
ACTIVITY
TIM FISHER
C. 2370.6 BRANCH HEAD
SATISFACTORY TO DATE 10/28/2016

DES	DS	DRW ERB	CHK CBC
PMDM	PETER STOCKLESS		
BRANCH MANAGER	IAN BODWELL		
FEAD/PM&E	AMIN BAHROUR		
FIRE PROTECTION	PATRICK BAKAJ		

DEPARTMENT OF THE NAVY
NAVAL FACILITIES ENGINEERING COMMAND ~ MID-ATLANTIC
PUBLIC WORKS DEPARTMENT - MAINE
NAVAL FACILITIES ENGINEERING COMMAND
NAVAL SHIPYARD - PORTSMOUTH, NH
PORTSMOUTH NAVAL SHIPYARD
KITTERY, ME
DRY DOCK #1 DEFUELING COMPLEX
DRE-7
FRAMING PLAN AT CRANE RAIL

EPROJECT NO.: 1363311
CONSTR. CONTR. NO. N40085-17-C-5002
NAVFAC DRAWING NO. 12734990
SHEET 19 OF 117
S-104 DD1-16-1071

DRAWFORM REVISION: 10 OCTOBER 2014

10/28/2016 6:57:04 AM X:\297 PORTSMOUTH NAVAL SHIPYARD\297.005.001 - DD#1 DEFUELING COMPLEX DESIGN\DRAWINGS\DRE7\SHEETS\S-104.DWG

NOTES

1. SEE S-001 FOR NOTES.
2. SEE SPECIFICATIONS FOR ADDITIONAL FABRICATION & ERECTION TOLERANCE REQUIREMENTS AT MOVABLE ROOF.

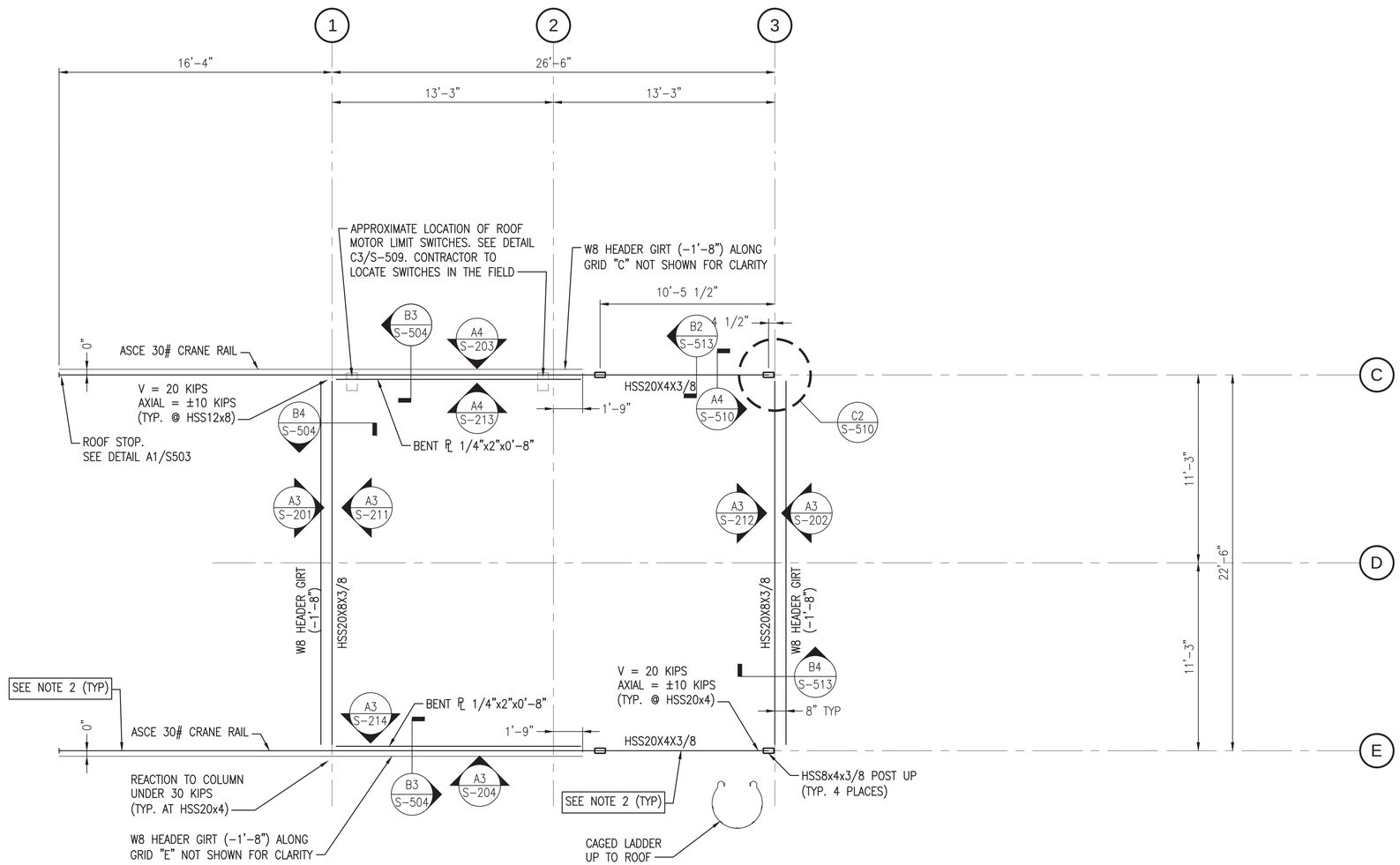

FRAMING PLAN AT TOP OF ENCLOSURE

SCALE:1/4" = 1'-0"

T.O.S. EL. 56'-4" U.N.O.

PLAN NORTH

0 2' 4' 8'
Scale: 1/4" = 1'-0"

SYM	DESCRIPTION	DATE	APPR
0	ISSUED FOR CONSTRUCTION	10/28/2016	CBC

NAVFAC

STATE OF MAINE
BRIAN J. BEAULIEU
No. 12004
LICENSED
PROFESSIONAL ENGINEER
10/28/16
SEAL

Colby Company engineering
A/E INFO

APPROVED
Daniel W. Greenfield
FOR COMMANDER NAVFAC

ACTIVITY
TIM FISHER
C. 2370.6 BRANCH HEAD

SATISFACTORY TO DATE 10/28/2016

DES	DS	DRW ERB	CHK CBC
PM/DM	PETER STOCKLESS		
BRANCH MANAGER	IAN BODWELL		
FEAD/PM&E	AMIN BAHROUR		
FIRE PROTECTION	PATRICK BAKAJ		

DEPARTMENT OF THE NAVY
NAVAL FACILITIES ENGINEERING COMMAND
PUBLIC WORKS DEPARTMENT - MAINE

NAVAL FACILITIES ENGINEERING COMMAND ~ MID-ATLANTIC
NAVAL SHIPYARD - PORTSMOUTH, NH

PORTSMOUTH NAVAL SHIPYARD
KITTERY, ME

DRY DOCK #1 DEFUELING COMPLEX
DRE-7

FRAMING PLAN AT TOP OF ENCLOSURE

EPROJECT NO.: 1363311

CONSTR. CONTR. NO.
N40085-17-C-5002

NAVFAC DRAWING NO.
12734991

SHEET 20 OF 117

S-105 | DD1-16-1072

DRAWFORM REVISION: 10 OCTOBER 2014

10/28/2016 6:57:08 AM X:\297 PORTSMOUTH NAVAL SHIPYARD\297.005.001 - DD#1 DEFUELING COMPLEX DESIGN\DRAWINGS\DRE\TSHEETS\S-105.DWG

NOTES

1. SEE S-001 FOR NOTES.

FRAMING LEGEND

( ) DENOTES STEEL ELEVATION DIFFERENCE FROM T.O.S. REF. IN PLAN TITLE

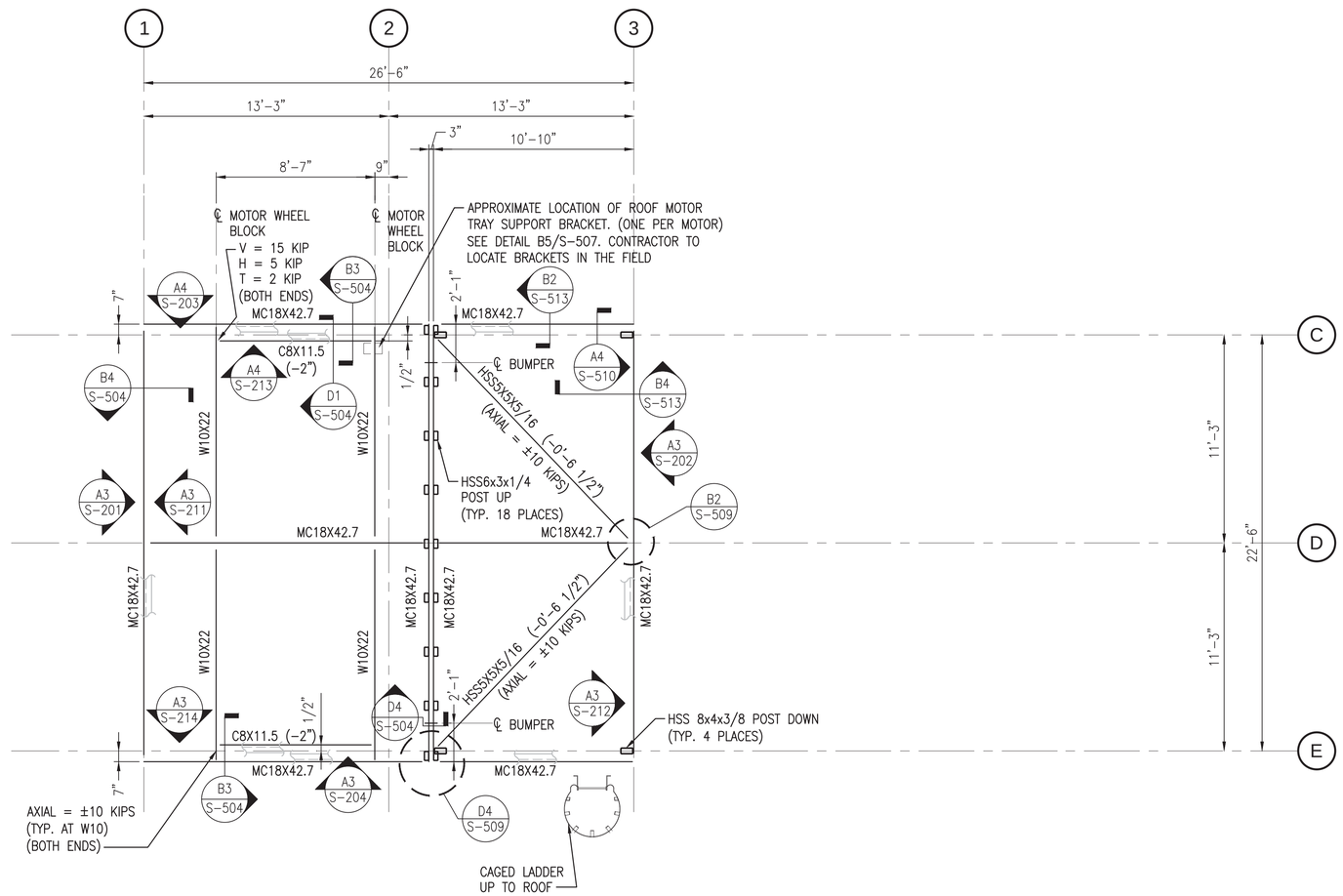

FRAMING PLAN AT B.O. MOVABLE ROOF

SCALE:1/4" = 1'-0"

T.O.S. EL. 58'-7"

PLAN NORTH

0 2' 4' 8'
Scale: 1/4" = 1'-0"

SYM	DESCRIPTION	DATE	APPR
0	ISSUED FOR CONSTRUCTION	10/28/2016	CBC

NAVFAC

STATE OF MAINE
BRIAN J. BEAULIEU
No. 12004
LICENSED PROFESSIONAL ENGINEER
10/28/16
SEAL

Colby Company engineering
A/E INFO

APPROVED
Signature
Daniel W. Greenfield
FOR COMMANDER NAVFAC

ACTIVITY
TIM FISHER
C. 2370.6 BRANCH HEAD

SATISFACTORY TO DATE 10/28/2016

DES DS DRW ERB CHK CBC

PMDM PETER STOCKLESS

BRANCH MANAGER IAN BODWELL

FEA/PM&E AMIN BAHROUR

FIRE PROTECTION PATRICK BAKAJ

DEPARTMENT OF THE NAVY
NAVAL FACILITIES ENGINEERING COMMAND
PUBLIC WORKS DEPARTMENT - MAINE

NAVAL FACILITIES ENGINEERING COMMAND ~ MID-ATLANTIC
NAVAL SHIPYARD: PORTSMOUTH, NH

PORTSMOUTH NAVAL SHIPYARD
KITTERY, ME

DRY DOCK #1 DEFUELING COMPLEX
DRE-7

FRAMING PLAN AT B.O. MOVABLE ROOF

EPROJECT NO.: 1363311

CONSTR. CONTR. NO. N40085-17-C-5002

NAVFAC DRAWING NO. 12734992

SHEET 21 OF 117

S-106 | DD1-16-1073

DRAWFORM REVISION: 10 OCTOBER 2014

10/28/2016 6:57:13 AM X:\297 PORTSMOUTH NAVAL SHIPYARD\297.005.001 - DD#1 DEFUELING COMPLEX DESIGN\DRAWINGS\DRE7\SHEETS\S-106.DWG

NOTES

1. SEE S-001 FOR NOTES.

FRAMING LEGEND

▒	DENOTES 1/4" STEEL ROOF PLATE. SEAM WELD TO ADJACENT PLATES, INTERMITTENT WELDS TO STRUCTURE BELOW. APPLY SLIP RESISTANT FINISH TO ALL REGIONS CONTAINED BY GUARDRAILS.
J1	DENOTES 400S300-54. STEEL STUD C-SHAPE. ATTACH TO C8 AT EACH INTERSECTION
C8	C8x11.5
( )	DENOTES STEEL ELEVATION DIFFERENCE FROM T.O.S. REF. IN PLAN TITLE

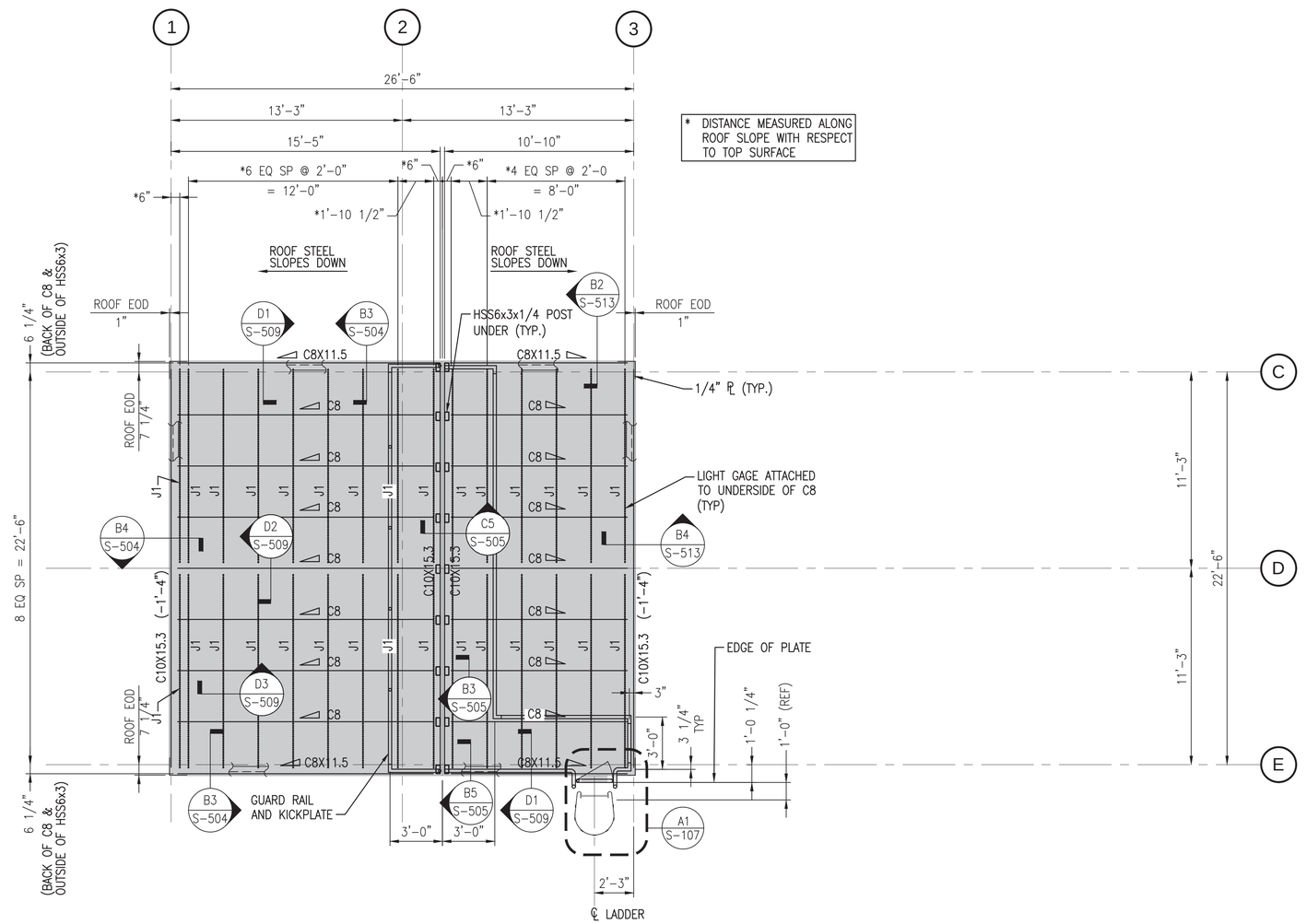

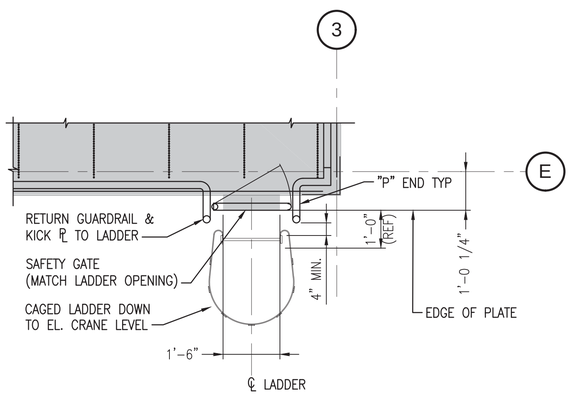

CAGED LADDER AND SAFETY GATE DETAIL (A1)

SCALE: 1/2"=1'-0" S-107

FRAMING PLAN AT T.O. MOVABLE ROOF

SCALE: 1/4" = 1'-0"

T.O.S. EL. 60'-9"

ROOF LIVE LOAD = 20 PSF (SEE S-001 FOR DESIGN SNOW LOAD)

PLAN NORTH

Scale: 1/4" = 1'-0"

SYM	DESCRIPTION	DATE	APPR
0	ISSUED FOR CONSTRUCTION	10/28/2016	CBC

NAVFAC

STATE OF MAINE — BRIAN J. BEAULIEU No. 12004 — LICENSED PROFESSIONAL ENGINEER — 10/28/16 — SEAL

Colby Company engineering — A/E INFO

APPROVED (AS CONDITIONED) — FOR COMMANDER NAVFAC

ACTIVITY: TIM FISHER, C. 2370.6 BRANCH HEAD

SATISFACTORY TO — DATE 10/28/2016

DES DS | DRW ERB | CHK CBC

PMDM: PETER STOCKLESS

BRANCH MANAGER: IAN BODWELL

FEAD/PMAE: AMIN BAHROUR

FIRE PROTECTION: PATRICK BAKAJ

DEPARTMENT OF THE NAVY — NAVAL FACILITIES ENGINEERING COMMAND — PUBLIC WORKS DEPARTMENT - MAINE

NAVAL FACILITIES ENGINEERING COMMAND ~ MID-ATLANTIC — NAVAL SHIPYARD - PORTSMOUTH, NH

PORTSMOUTH NAVAL SHIPYARD — KITTERY, ME

DRY DOCK #1 DEFUELING COMPLEX DRE-7

FRAMING PLAN AT T.O. MOVABLE ROOF

EPROJECT NO.: 1363311

CONSTR. CONTR. NO.: N40085-17-C-5002

NAVFAC DRAWING NO.: 12734993

SHEET 22 OF 117

S-107 | DD1-16-1074

DRAWFORM REVISION: 10 OCTOBER 2014

10/28/2016 6:57:17 AM X:\297 PORTSMOUTH NAVAL SHIPYARD\297.005.001 - DD#1 DEFUELING COMPLEX DESIGN\DRAWINGS\DRE7\SHEETS\S-107.DWG

NOTES

1. SEE S-001 FOR NOTES.
2. VERTICAL BRACING WORK POINTS TO BE LOCATED AT THE INTERSECTION OF COLUMN AND BEAM CENTERLINES (U.N.O.)
3. U.N.O. FACE OF ALL GIRTS (Z6, C7, ETC.) EXTEND OUT 1'-1" FROM COLUMN ℄.

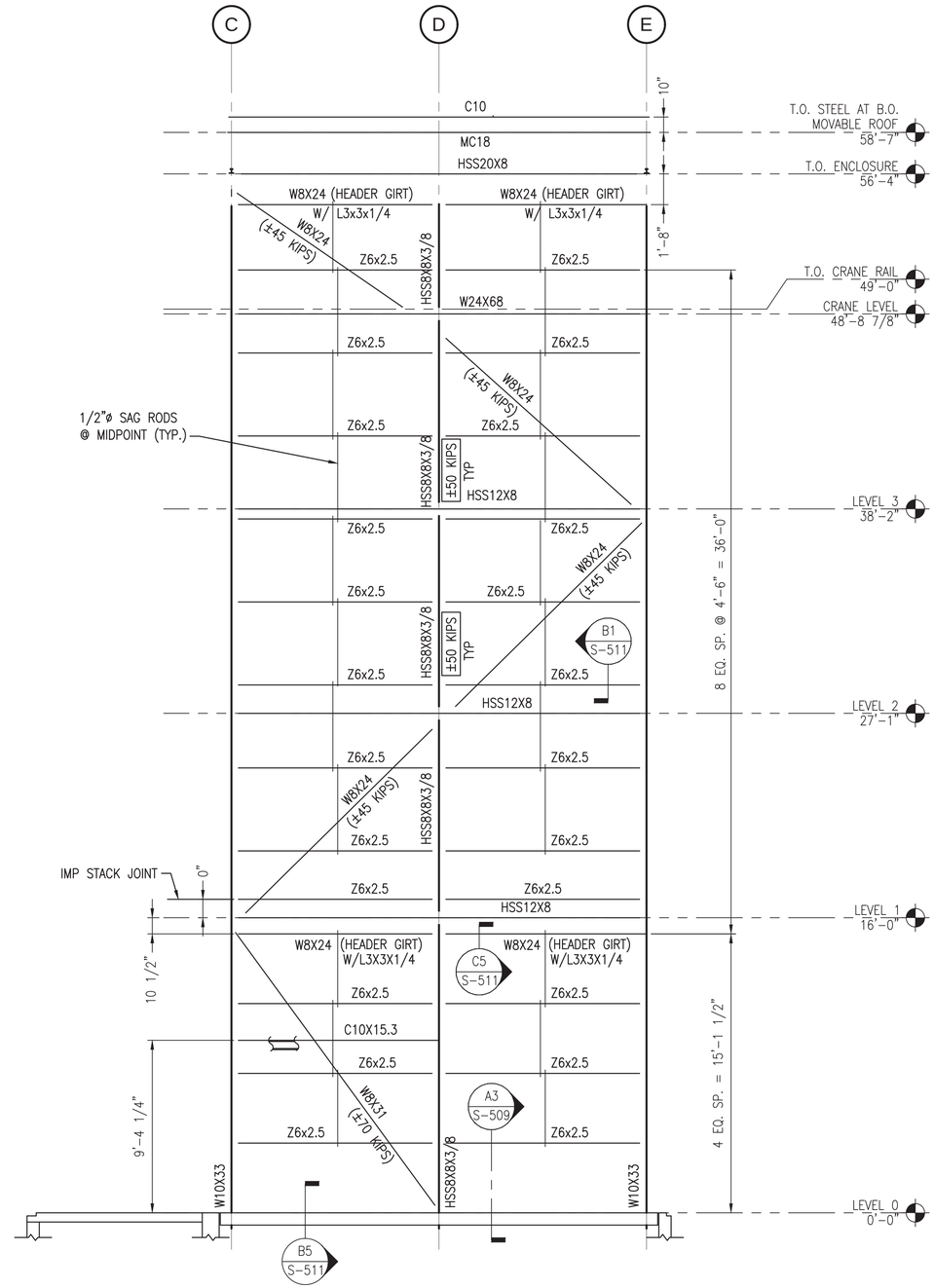

FRAMING ELEVATION AT COLUMN LINE 1 WITHOUT STORAGE ANNEX

SCALE: 1/4"=1'-0" S-101, S-102, S-103, S-104, S-105, S-106

A3

0 2' 4' 8'
Scale: 1/4" = 1'-0"

SYM	DESCRIPTION	DATE	APPR
0	ISSUED FOR CONSTRUCTION	10/28/2016	CBC

NAVFAC

STATE OF MAINE
BRIAN J. BEAULIEU
No. 12004
LICENSED PROFESSIONAL ENGINEER
10/28/16
SEAL

Colby Company engineering
A/E INFO

APPROVED
Daniel W. Greenfield
FOR COMMANDER NAVFAC

ACTIVITY
TIM FISHER
C. 2370.6 BRANCH HEAD

SATISFACTORY TO DATE 10/28/2016

DES	DS	DRW	ERB	CHK	CBC

PM/DM PETER STOCKLESS
BRANCH MANAGER IAN BODWELL
FEAD/PM&E AMIN BAHROUR
FIRE PROTECTION PATRICK BAKAJ

DEPARTMENT OF THE NAVY
NAVAL FACILITIES ENGINEERING COMMAND
PUBLIC WORKS DEPARTMENT - MAINE
NAVAL FACILITIES ENGINEERING COMMAND – MID-ATLANTIC
NAVAL SHIPYARD - PORTSMOUTH, NH
PORTSMOUTH NAVAL SHIPYARD
KITTERY, ME
DRY DOCK #1 DEFUELING COMPLEX
DRE-7
EXTERIOR FRAMING ELEVATION AT COLUMN LINE 1 (NO STORAGE ANNEX)

EPROJECT NO.: 1363311
CONSTR. CONTR. NO. N40085-17-C-5002
NAVFAC DRAWING NO. 12734994
SHEET 23 OF 117

S-201 DD1-16-1075

DRAWFORM REVISION: 10 OCTOBER 2014

10/28/2016 6:57:21 AM X:\297 PORTSMOUTH NAVAL SHIPYARD\297.005.001 - DD#1 DEFUELING COMPLEX DESIGN\DRAWINGS\DRE7\SHEETS\S-201.DWG

NOTES

1. SEE S-001 FOR NOTES.
2. VERTICAL BRACING WORK POINTS TO BE LOCATED AT THE INTERSECTION OF COLUMN AND BEAM CENTERLINES (U.N.O.)
3. U.N.O. FACE OF ALL GIRTS (Z6, C7, ETC.) EXTEND OUT 1'-1" FROM COLUMN ℄.

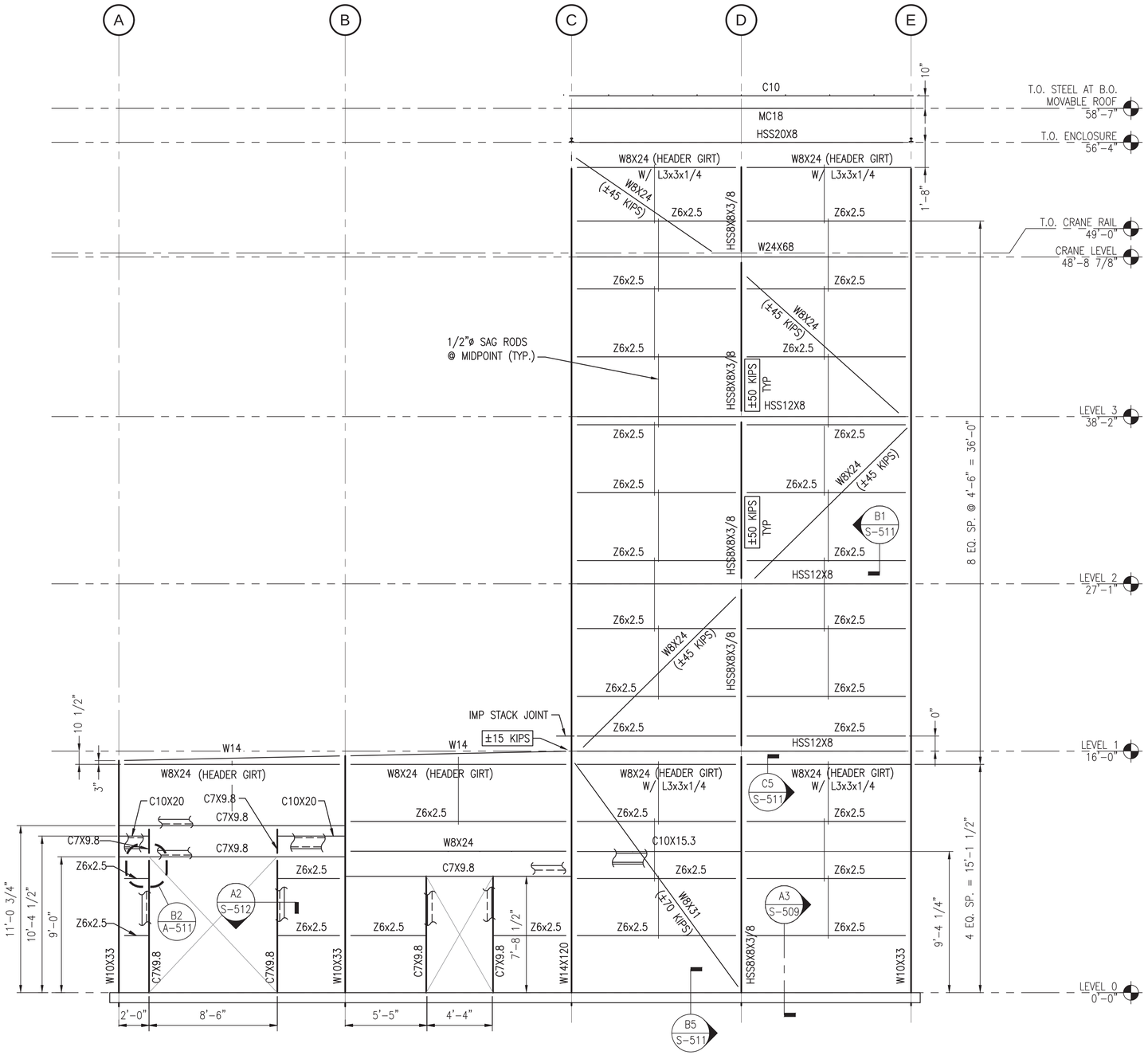

FRAMING ELEVATION AT COLUMN LINE 1

SCALE: 1/4"=1'-0"

S-101A A3

0 2' 4' 8'
Scale: 1/4" = 1'-0"

SYM	DESCRIPTION	DATE	APPR
0	ISSUED FOR CONSTRUCTION	10/28/2016	CBC

NAVFAC

STATE OF MAINE
BRIAN J. BEAULIEU
No. 12004
LICENSED PROFESSIONAL ENGINEER
10/28/16
SEAL

Colby Company engineering
A/E INFO

APPROVED
Digitally signed by Daniel W. Greenfield
FOR COMMANDER NAVFAC

ACTIVITY
TIM FISHER
C. 2370.6 BRANCH HEAD

SATISFACTORY TO DATE 10/28/2016

DES	DS	DRW	ERB	CHK	CBC

PM/DM PETER STOCKLESS
BRANCH MANAGER IAN BODWELL
FEA/PM&E AMIN BAHROUR
FIRE PROTECTION PATRICK BAKAJ

DEPARTMENT OF THE NAVY
NAVAL FACILITIES ENGINEERING COMMAND
PUBLIC WORKS DEPARTMENT - MAINE

NAVAL FACILITIES ENGINEERING COMMAND – MID-ATLANTIC
NAVAL SHIPYARD - PORTSMOUTH, NH
PORTSMOUTH NAVAL SHIPYARD
KITTERY, ME

DRY DOCK #1 DEFUELING COMPLEX DRE-7

EXTERIOR FRAMING ELEVATION AT COLUMN LINE 1

EPROJECT NO.: 1363311
CONSTR. CONTR. NO. N40085-17-C-5002
NAVFAC DRAWING NO. 12734995
SHEET 24 OF 117

S-201A | DD1-16-1076

DRAWFORM REVISION: 10 OCTOBER 2014

10/28/2016 6:57:25 AM X:\297 PORTSMOUTH NAVAL SHIPYARD\297.005.001 - DDH1 DEFUELING COMPLEX DESIGN\DRAWINGS\DRE7\SHEETS\S-201A.DWG

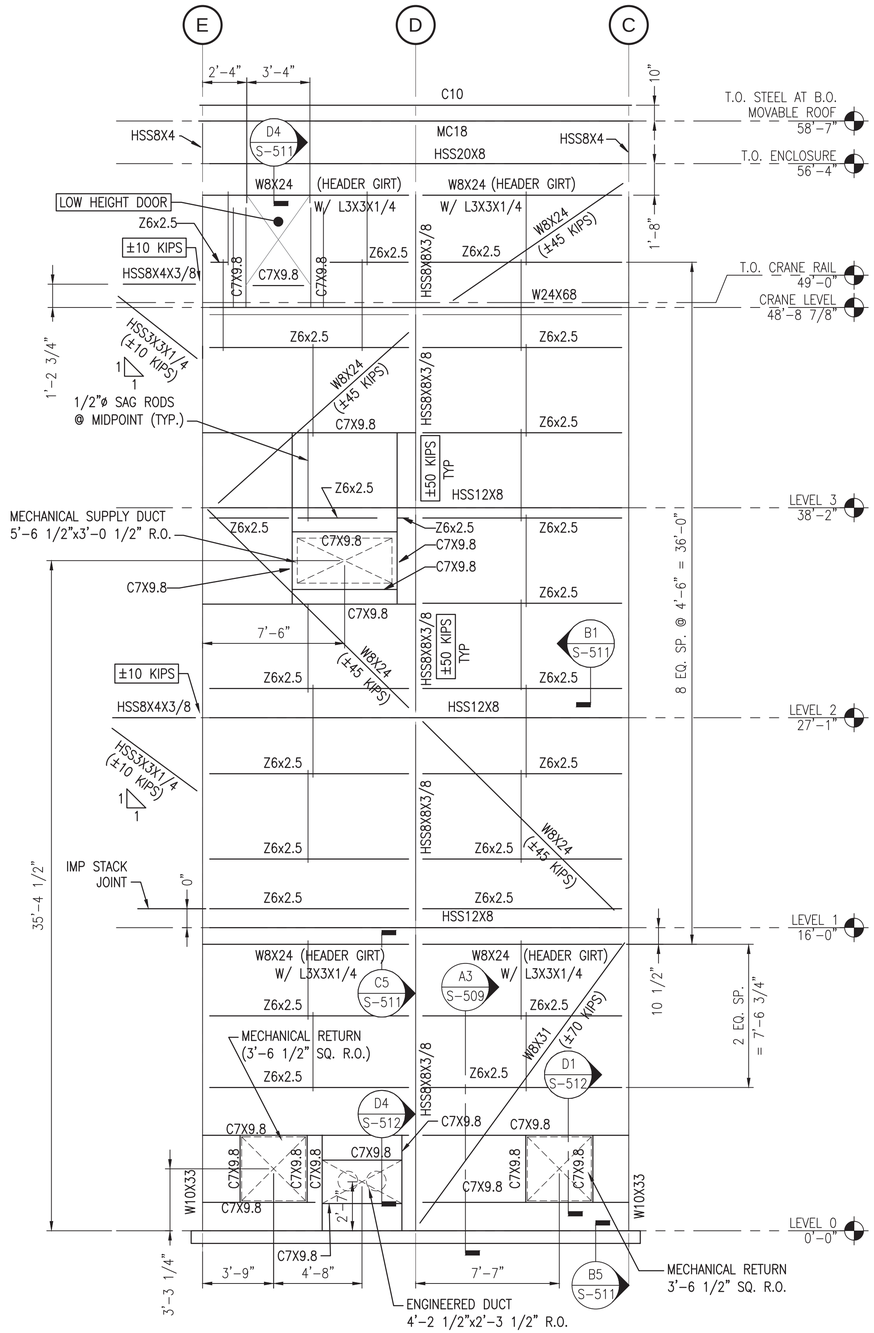

FRAMING ELEVATION AT COLUMN LINE 3 WITHOUT STORAGE ANNEX

SCALE: 1/4"=1'-0" S-101, S-102, S-103, S-104, S-105, S-106 A3

NOTES

1. SEE S-001 FOR NOTES.
2. VERTICAL BRACING WORK POINTS TO BE LOCATED AT THE INTERSECTION OF COLUMN AND BEAM CENTERLINES (U.N.O.)
3. U.N.O. FACE OF ALL GIRTS (Z6, C7, ETC.) EXTEND OUT 1'-1" FROM COLUMN ℄.

0 2' 4' 8'
Scale: 1/4" = 1'-0"

SYM	DESCRIPTION	DATE	APPR
0	ISSUED FOR CONSTRUCTION	10/28/2016	CBC

NAVFAC

STATE OF MAINE
BRIAN J. BEAULIEU
No. 12004
LICENSED PROFESSIONAL ENGINEER
10/28/16
SEAL

Colby Company engineering
A/E INFO

APPROVED (AS CONVENED) David W. Greenfield
FOR COMMANDER NAVFAC

ACTIVITY: TIM FISHER, C. 2370.6 BRANCH HEAD
SATISFACTORY TO DATE 10/28/2016
DES DS DRW ERB CHK CBC
PMDM PETER STOCKLESS
BRANCH MANAGER IAN BODWELL
FEA/PM&E AMIN BAHROUR
FIRE PROTECTION PATRICK BAKAJ

DEPARTMENT OF THE NAVY
NAVAL FACILITIES ENGINEERING COMMAND
PUBLIC WORKS DEPARTMENT, MAINE
NAVAL FACILITIES ENGINEERING COMMAND ~ MID-ATLANTIC
NAVAL SHIPYARD, PORTSMOUTH, NH
PORTSMOUTH NAVAL SHIPYARD
KITTERY, ME
DRY DOCK #1 DEFUELING COMPLEX
DRE-7
EXTERIOR FRAMING ELEVATION AT COLUMN LINE 3 (NO STORAGE ANNEX)

EPROJECT NO.: 1363311
CONSTR. CONTR. NO. N40085-17-C-5002
NAVFAC DRAWING NO. 12734996
SHEET 25 OF 117
S-202 DD1-16-1077

DRAWFORM REVISION: 10 OCTOBER 2014

10/28/2016 6:57:29 AM X:\297 PORTSMOUTH NAVAL SHIPYARD\297.005.001 - DD#1 DEFUELING COMPLEX DESIGN\DRAWINGS\DRE7\SHEETS\S-202.DWG

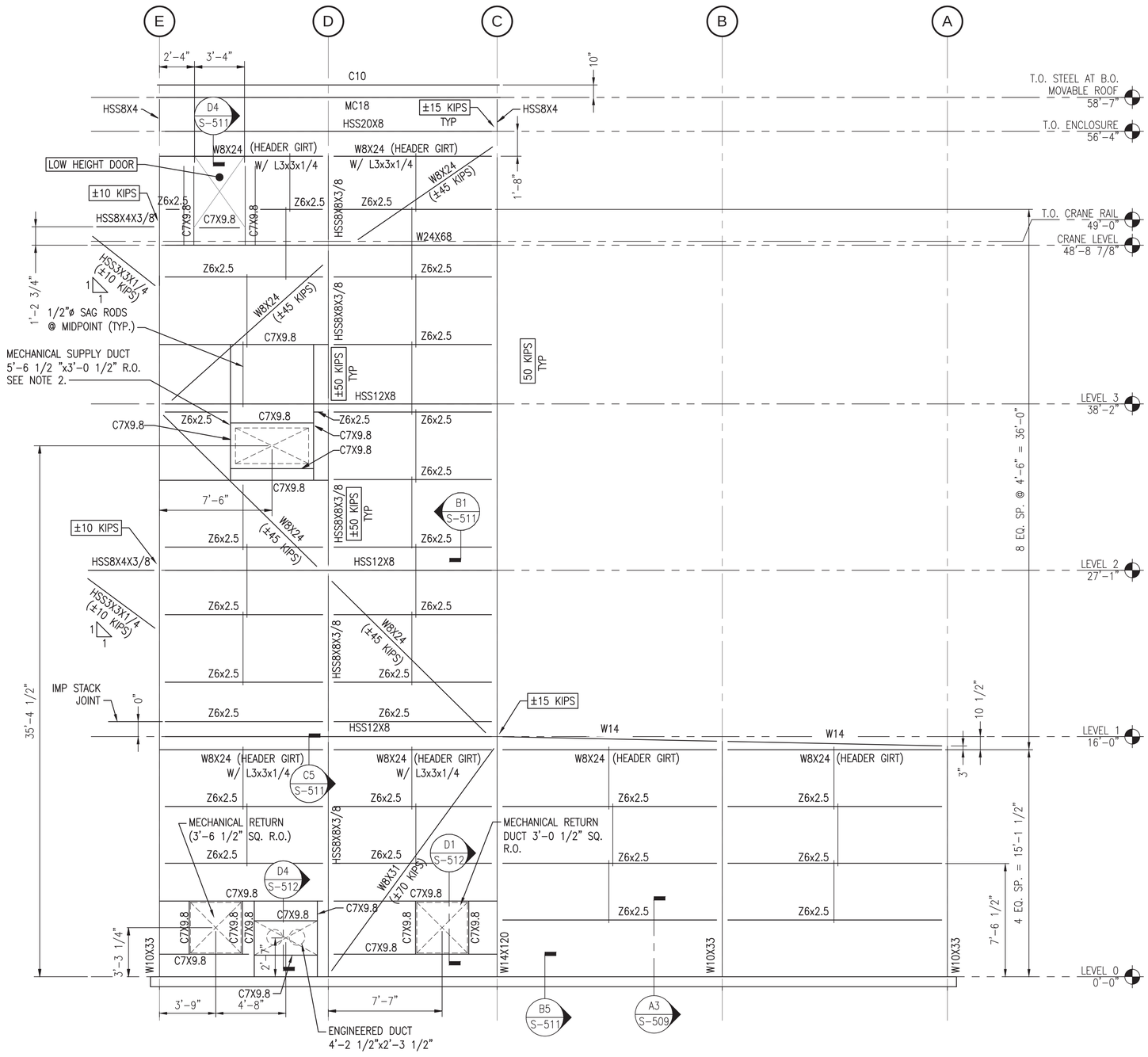

FRAMING ELEVATION AT COLUMN LINE 3

SCALE: 1/4"=1'-0"

S-101A A3

Scale: 1/4" = 1'-0"

NOTES

1. SEE S-001 FOR NOTES.
2. VERTICAL BRACING WORK POINTS TO BE LOCATED AT THE INTERSECTION OF COLUMN AND BEAM CENTERLINES (U.N.O.)
3. U.N.O. FACE OF ALL GIRTS (Z6, C7, ETC.) EXTEND OUT 1'-1" FROM COLUMN ℄.

SYM	DESCRIPTION	DATE	APPR
0	ISSUED FOR CONSTRUCTION	10/28/2016	CBC

NAVFAC

STATE OF MAINE — BRIAN J. BEAULIEU No. 12004 — LICENSED PROFESSIONAL ENGINEER — 10/28/16 — SEAL

Colby Company engineering — A/E INFO

APPROVED (Signature) — FOR COMMANDER NAVFAC

ACTIVITY: TIM FISHER, C. 2370.6 BRANCH HEAD

SATISFACTORY TO — DATE 10/28/2016

DES DS | DRW ERB | CHK CBC

PMDM: PETER STOCKLESS

BRANCH MANAGER: IAN BODWELL

FEAD/PM&E: AMIN BAHROUR

FIRE PROTECTION: PATRICK BAKAJ

DEPARTMENT OF THE NAVY — NAVAL FACILITIES ENGINEERING COMMAND — PUBLIC WORKS DEPARTMENT - MAINE

NAVAL FACILITIES ENGINEERING COMMAND ~ MID-ATLANTIC — NAVAL SHIPYARD - PORTSMOUTH, NH

PORTSMOUTH NAVAL SHIPYARD — KITTERY, ME

DRY DOCK #1 DEFUELING COMPLEX DRE-7

EXTERIOR FRAMING ELEVATION AT COLUMN LINE 3

EPROJECT NO.: 1363311

CONSTR. CONTR. NO.: N40085-17-C-5002

NAVFAC DRAWING NO.: 12734997

SHEET 26 OF 117

S-202A | DD1-16-1078

DRAWFORM REVISION: 10 OCTOBER 2014

10/28/2016 6:57:33 AM X:\297 PORTSMOUTH NAVAL SHIPYARD\297.005.001 - DD#1 DEFUELING COMPLEX DESIGN\DRAWINGS\DRE7\SHEETS\S-202A.DWG

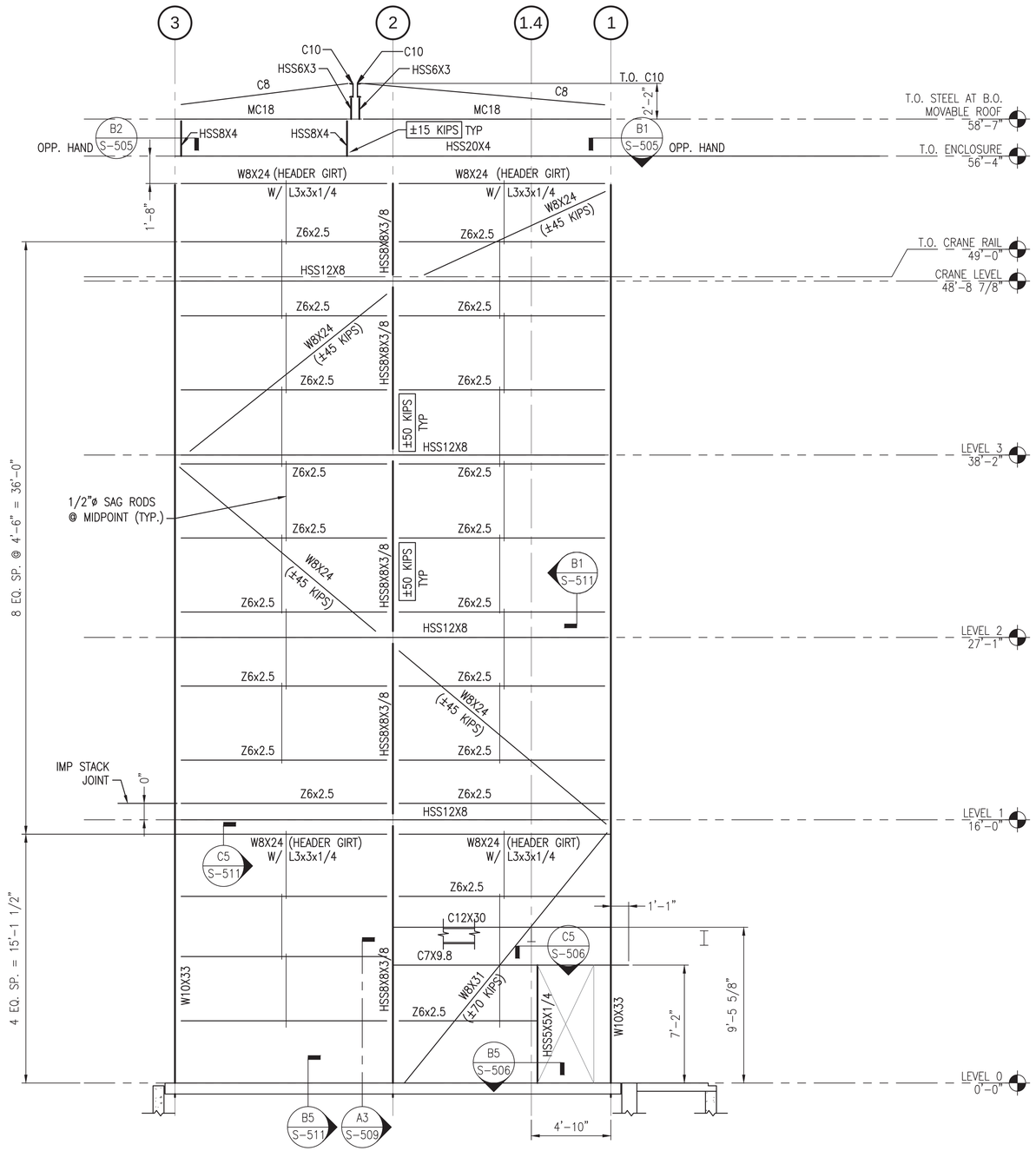

FRAMING ELEVATION AT COLUMN LINE C WITHOUT STORAGE ANNEX

SCALE: 1/4"=1'-0" S-101, S-102, S-103, S-104, S-105, S-106

A4

NOTES

1. SEE S-001 FOR NOTES.
2. VERTICAL BRACING WORK POINTS TO BE LOCATED AT THE INTERSECTION OF COLUMN AND BEAM CENTERLINES (U.N.O.)
3. U.N.O. FACE OF ALL GIRTS (Z6, C7, ETC.) EXTEND OUT 1'-1" FROM COLUMN ℄.

0 2' 4' 8'
Scale: 1/4" = 1'-0"

SYM	DESCRIPTION	DATE	APPR
0	ISSUED FOR CONSTRUCTION	10/28/2016	CBC

NAVFAC

STATE OF MAINE
BRIAN J. BEAULIEU
No. 12004
LICENSED PROFESSIONAL ENGINEER
10/28/16
SEAL

Colby Company engineering
A/E INFO

APPROVED
Daniel W. Greenfield
FOR COMMANDER NAVFAC

ACTIVITY
TIM FISHER
C. 2370.6 BRANCH HEAD

SATISFACTORY TO DATE 10/28/2016

DES	DS	DRW ERB	CHK CBC
PM/DM	PETER STOCKLESS		
BRANCH MANAGER	IAN BODWELL		
FEAD/PM&E	AMIN BAHROUR		
FIRE PROTECTION	PATRICK BAKAJ		

DEPARTMENT OF THE NAVY
NAVAL FACILITIES ENGINEERING COMMAND ~ MID-ATLANTIC
PUBLIC WORKS DEPARTMENT - MAINE
NAVAL SHIPYARD - PORTSMOUTH, NH
PORTSMOUTH NAVAL SHIPYARD
KITTERY, ME

DRY DOCK #1 DEFUELING COMPLEX DRE-7

EXTERIOR FRAMING LINE ELEVATIONS AT COLUMN LINES A AND C (NO STORAGE ANNEX)

EPROJECT NO.: 1363311

CONSTR. CONTR. NO.: N40085-17-C-5002

NAVFAC DRAWING NO. 12734998

SHEET 27 OF 117

S-203 | DD1-16-1079

DRAWFORM REVISION: 10 OCTOBER 2014

10/28/2016 6:57:37 AM X:\297 PORTSMOUTH NAVAL SHIPYARD\297.005.001 - DD#1 DEFUELING COMPLEX DESIGN\DRAWINGS\DRE7\SHEETS\S-203.DWG

NOTES

1. SEE S-001 FOR NOTES.
2. VERTICAL BRACING WORK POINTS TO BE LOCATED AT THE INTERSECTION OF COLUMN AND BEAM CENTERLINES (U.N.O.)
3. U.N.O. FACE OF ALL GIRTS (Z6, C7, ETC.) EXTEND OUT 1'-1" FROM COLUMN ℄.

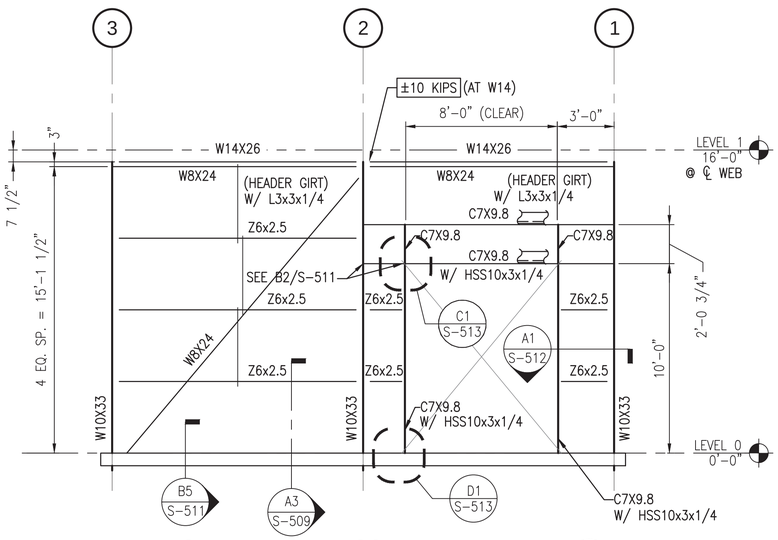

FRAMING ELEVATION AT COLUMN LINE A

SCALE: 1/4"=1'-0" S-101A C1

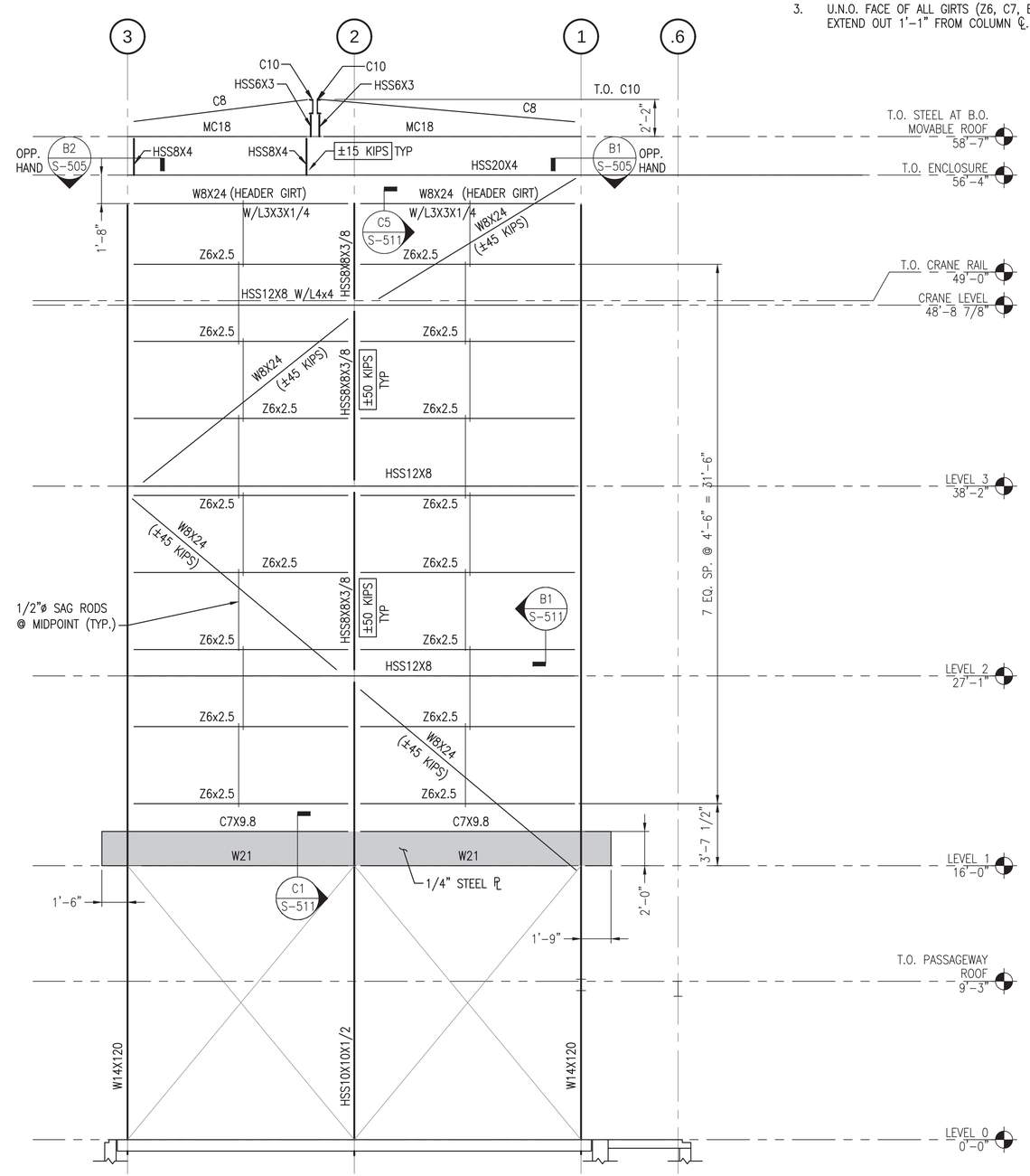

FRAMING ELEVATION AT COLUMN LINE C

SCALE: 1/4"=1'-0" S-101A A4

0 2' 4' 8'
Scale: 1/4" = 1'-0"

SYM	DESCRIPTION	DATE	APPR
0	ISSUED FOR CONSTRUCTION	10/28/2016	CBC

NAVFAC

STATE OF MAINE
BRIAN J. BEAULIEU
No. 12004
LICENSED PROFESSIONAL ENGINEER
10/28/16
SEAL

Colby Company engineering

A/E INFO

APPROVED
Date Signature
Daniel W. Greenfield
FOR COMMANDER NAVFAC

ACTIVITY
TIM FISHER
C. 2370.6 BRANCH HEAD

SATISFACTORY TO DATE 10/28/2016

DES	DS	DRW	ERB	CHK	CBC

PMDM: PETER STOCKLESS
BRANCH MANAGER: IAN BODWELL
FEAD/PM&E: AMIN BAHROUR
FIRE PROTECTION: PATRICK BAKAJ

DEPARTMENT OF THE NAVY
NAVAL FACILITIES ENGINEERING COMMAND ~ MID-ATLANTIC
PUBLIC WORKS DEPARTMENT - MAINE

NAVAL FACILITIES ENGINEERING COMMAND
NAVAL SHIPYARD - PORTSMOUTH, NH
PORTSMOUTH NAVAL SHIPYARD
KITTERY, ME
DRY DOCK #1 DEFUELING COMPLEX
DRE-7

EXTERIOR FRAMING ELEVATIONS AT COLUMN LINES A AND C

EPROJECT NO.: 1363311
CONSTR. CONTR. NO. N40085-17-C-5002
NAVFAC DRAWING NO. 12734999
SHEET 28 OF 117

S-203A | DD1-16-1080

DRAWFORM REVISION: 10 OCTOBER 2014

10/28/2016 6:57:41 AM X:\297 PORTSMOUTH NAVAL SHIPYARD\297.005.001 - DD#1 DEFUELING COMPLEX DESIGN\DRAWINGS\DRE7\SHEETS\S-203A.DWG

NOTES

1. SEE S-001 FOR NOTES.
2. VERTICAL BRACING WORK POINTS TO BE LOCATED AT THE INTERSECTION OF COLUMN AND BEAM CENTERLINES (U.N.O.)
3. U.N.O. FACE OF ALL GIRTS (Z6, C7, ETC.) EXTEND OUT 1'-1" FROM COLUMN ℄.

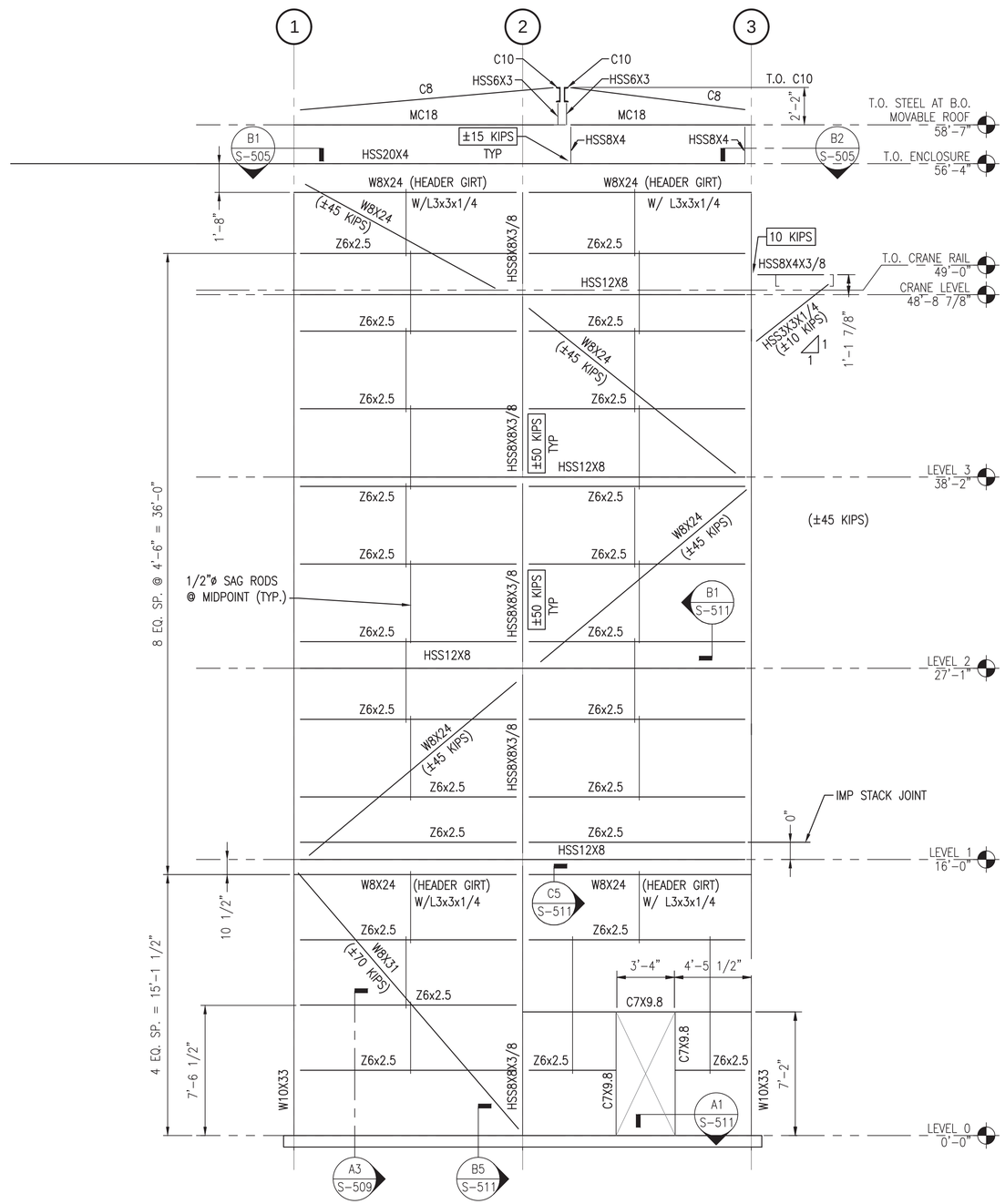

FRAMING ELEVATION AT COLUMN LINE E

SCALE: 1/4"=1'-0"

S-101, S,101A, S-102, S-103, S-104, S-105, S-106

A3

0 2' 4' 8'
Scale: 1/4" = 1'-0"

SYM	DESCRIPTION	DATE	APPR
0	ISSUED FOR CONSTRUCTION	10/28/2016	CBC

NAVFAC

STATE OF MAINE
BRIAN J. BEAULIEU
No. 12004
LICENSED PROFESSIONAL ENGINEER
10/28/16
SEAL

Colby Company engineering
A/E INFO

APPROVED
Daniel W. Greenfield
FOR COMMANDER NAVFAC

ACTIVITY
TIM FISHER
C. 2370.6 BRANCH HEAD

SATISFACTORY TO DATE 10/28/2016

DES	DS	DRW	ERB	CHK	CBC

PM/DM PETER STOCKLESS
BRANCH MANAGER IAN BODWELL
FEAD/PM&E AMIN BAHROUR
FIRE PROTECTION PATRICK BAKAJ

DEPARTMENT OF THE NAVY
NAVAL FACILITIES ENGINEERING COMMAND
PUBLIC WORKS DEPARTMENT - MAINE

NAVAL FACILITIES ENGINEERING COMMAND ~ MID-ATLANTIC
NAVAL SHIPYARD - PORTSMOUTH, NH

PORTSMOUTH NAVAL SHIPYARD
KITTERY, ME

DRY DOCK #1 DEFUELING COMPLEX
DRE-7

EXTERIOR FRAMING ELEVATION AT COLUMN LINE E

EPROJECT NO.: 1363311
CONSTR. CONTR. NO.: N40085-17-C-5002
NAVFAC DRAWING NO. 12735000
SHEET 29 OF 117

S-204 | DD1-16-1081

DRAWFORM REVISION: 10 OCTOBER 2014

10/28/2016 6:57:45 AM X:\297 PORTSMOUTH NAVAL SHIPYARD\297.005.001 - DD#1 DEFUELING COMPLEX DESIGN\DRAWINGS\DRE7\SHEETS\S-204.DWG

NOTES

1. SEE S-001 FOR NOTES.

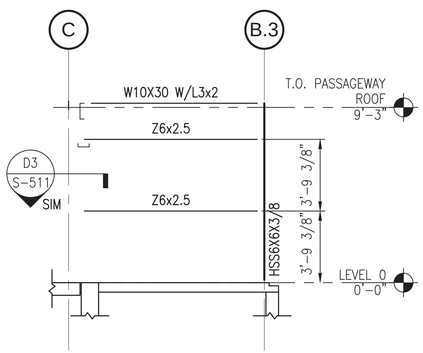

FRAMING ELEVATION AT COLUMN LINE 1.4
- WITHOUT STORAGE ANNEX

SCALE: 1/4"=1'-0" S-401 B1

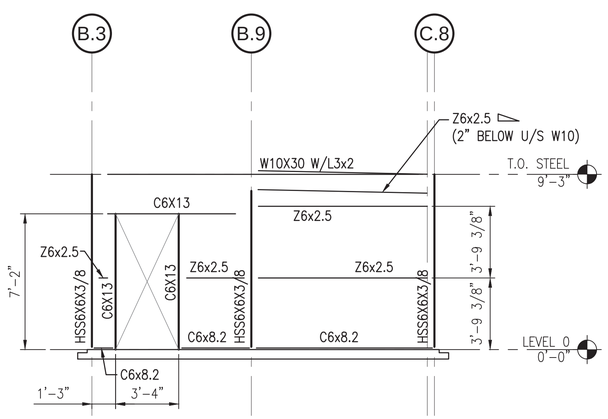

FRAMING ELEVATION AT COLUMN LINE .6

SCALE: 1/4"=1'-0" S-401 A1

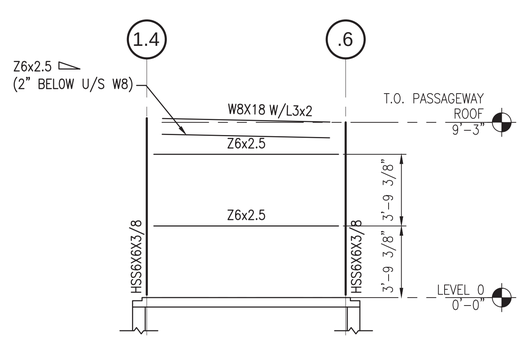

FRAMING ELEVATION AT COLUMN LINE B.3
- WITHOUT STORAGE ANNEX

SCALE: 1/4"=1'-0" S-401 A2

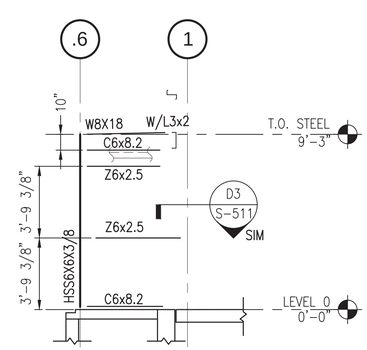

FRAMING ELEVATION AT COLUMN LINE C.8

SCALE: 1/4"=1'-0" S-401 A4

0 2' 4' 8'
Scale: 1/4" = 1'-0"

SYM	DESCRIPTION	DATE	APPR
0	ISSUED FOR CONSTRUCTION	10/28/2016	CBC

NAVFAC

STATE OF MAINE
BRIAN J. BEAULIEU
No. 12004
LICENSED
PROFESSIONAL ENGINEER
10/28/16
SEAL

Colby Company engineering
A/E INFO

APPROVED
Date Signature
David W. Trumfield
FOR COMMANDER NAVFAC

ACTIVITY
TIM FISHER
C. 2370.6 BRANCH HEAD

SATISFACTORY TO DATE 10/28/2016

DES	DS	DRW	ERB	CHK	CBC

PMDM PETER STOCKLESS
BRANCH MANAGER IAN BODWELL
FEA/DPM&E AMIN BAHROUR
FIRE PROTECTION PATRICK BAKAJ

DEPARTMENT OF THE NAVY
NAVAL FACILITIES ENGINEERING COMMAND ~ MID-ATLANTIC
PUBLIC WORKS DEPARTMENT - MAINE
NAVAL FACILITIES ENGINEERING COMMAND
NAVAL SHIPYARD, PORTSMOUTH, NH
PORTSMOUTH NAVAL SHIPYARD
KITTERY, ME
DRY DOCK #1 DEFUELING COMPLEX
DRE-7
EXTERIOR FRAMING ELEVATIONS AT PASSAGEWAY (NO STORAGE ANNEX)

EPROJECT NO.: 1363311
CONSTR. CONTR. NO. N40085-17-C-5002
NAVFAC DRAWING NO. 12735001
SHEET 30 OF 117
S-205 DD1-16-1082

DRAWFORM REVISION: 10 OCTOBER 2014

10/28/2016 6:57:49 AM X:\297 PORTSMOUTH NAVAL SHIPYARD\297.005.001 - DD#1 DEFUELING COMPLEX DESIGN\DRAWINGS\DRE7\SHEETS\S-205.DWG

NOTES

1. SEE S-001 FOR NOTES.

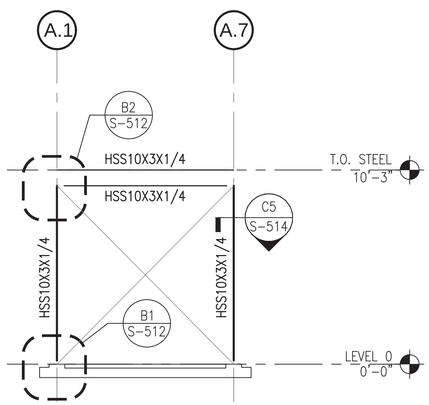

FRAMING ELEVATION AT COLUMN LINE 0.5 (B1)
SCALE: 1/4"=1'-0" S-401A

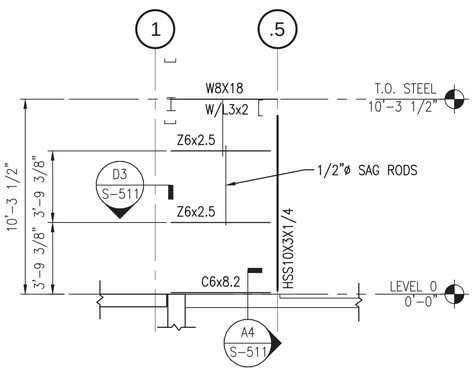

FRAMING ELEVATION AT COLUMN LINE A.1 (B2)
SCALE: 1/4"=1'-0" S-401A

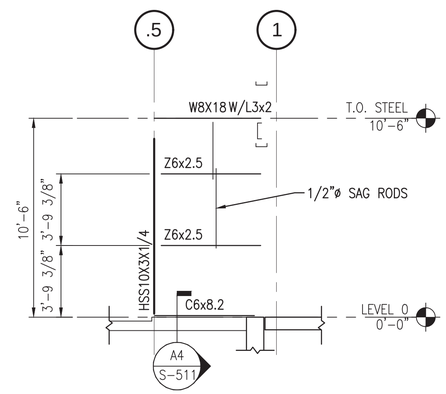

FRAMING ELEVATION AT COLUMN LINE A.7 (B4)
SCALE: 1/4"=1'-0" S-401A

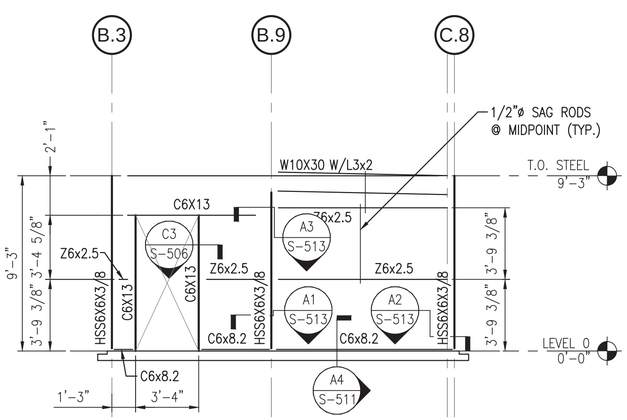

FRAMING ELEVATION AT COLUMN LINE 0.6 (A1)
SCALE: 1/4"=1'-0" S-401A

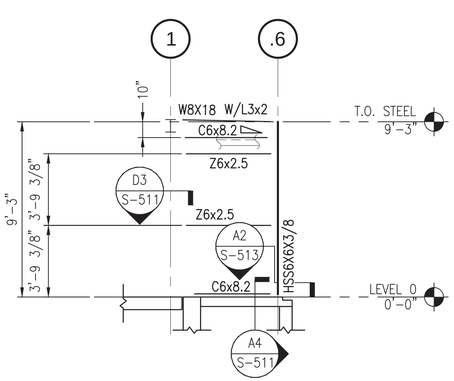

FRAMING ELEVATION AT COLUMN LINE B.3 (A2)
SCALE: 1/4"=1'-0" S-401A

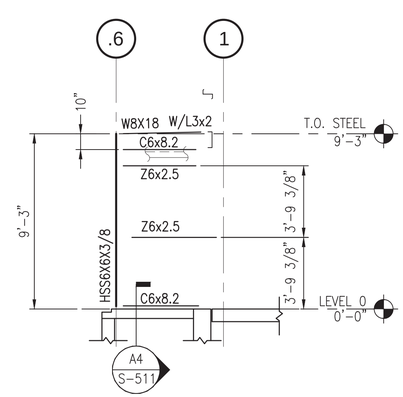

FRAMING ELEVATION AT COLUMN LINE C.8 (A4)
SCALE: 1/4"=1'-0" S-401A

0 2' 4' 8'
Scale: 1/4" = 1'-0"

SYM	DESCRIPTION	DATE	APPR
0	ISSUED FOR CONSTRUCTION	10/28/2016	CBC

NAVFAC

STATE OF MAINE
BRIAN J. BEAULIEU
No. 12004
LICENSED PROFESSIONAL ENGINEER
10/28/16
SEAL

Colby Company engineering
A/E INFO

APPROVED (Signature) Daniel W. Greenfield
FOR COMMANDER NAVFAC

ACTIVITY
TIM FISHER
C. 2370.6 BRANCH HEAD

SATISFACTORY TO DATE 10/28/2016
DES DS DRW ERB CHK CBC
PM/DM PETER STOCKLESS
BRANCH MANAGER IAN BODWELL
FEAD/PM&E AMIN BAHROUR
FIRE PROTECTION PATRICK BAKAJ

DEPARTMENT OF THE NAVY
NAVAL FACILITIES ENGINEERING COMMAND
NAVAL FACILITIES ENGINEERING COMMAND ~ MID-ATLANTIC
PUBLIC WORKS DEPARTMENT - MAINE
NAVAL SHIPYARD - PORTSMOUTH, NH
PORTSMOUTH NAVAL SHIPYARD
KITTERY, ME
DRY DOCK #1 DEFUELING COMPLEX
DRE-7
EXTERIOR FRAMING ELEVATIONS AT ISO CONTAINER AND PASSAGEWAY

EPROJECT NO.: 1363311
CONSTR. CONTR. NO.: N40085-17-C-5002
NAVFAC DRAWING NO. 12735002
SHEET 31 OF 117
S-205A DD1-16-1083

DRAWFORM REVISION: 10 OCTOBER 2014

10/28/2016 6:57:55 AM X:\297 PORTSMOUTH NAVAL SHIPYARD\297.005.001 - DD#1 DEFUELING COMPLEX DESIGN\DRAWINGS\DRE7\SHEETS\S-205A.DWG

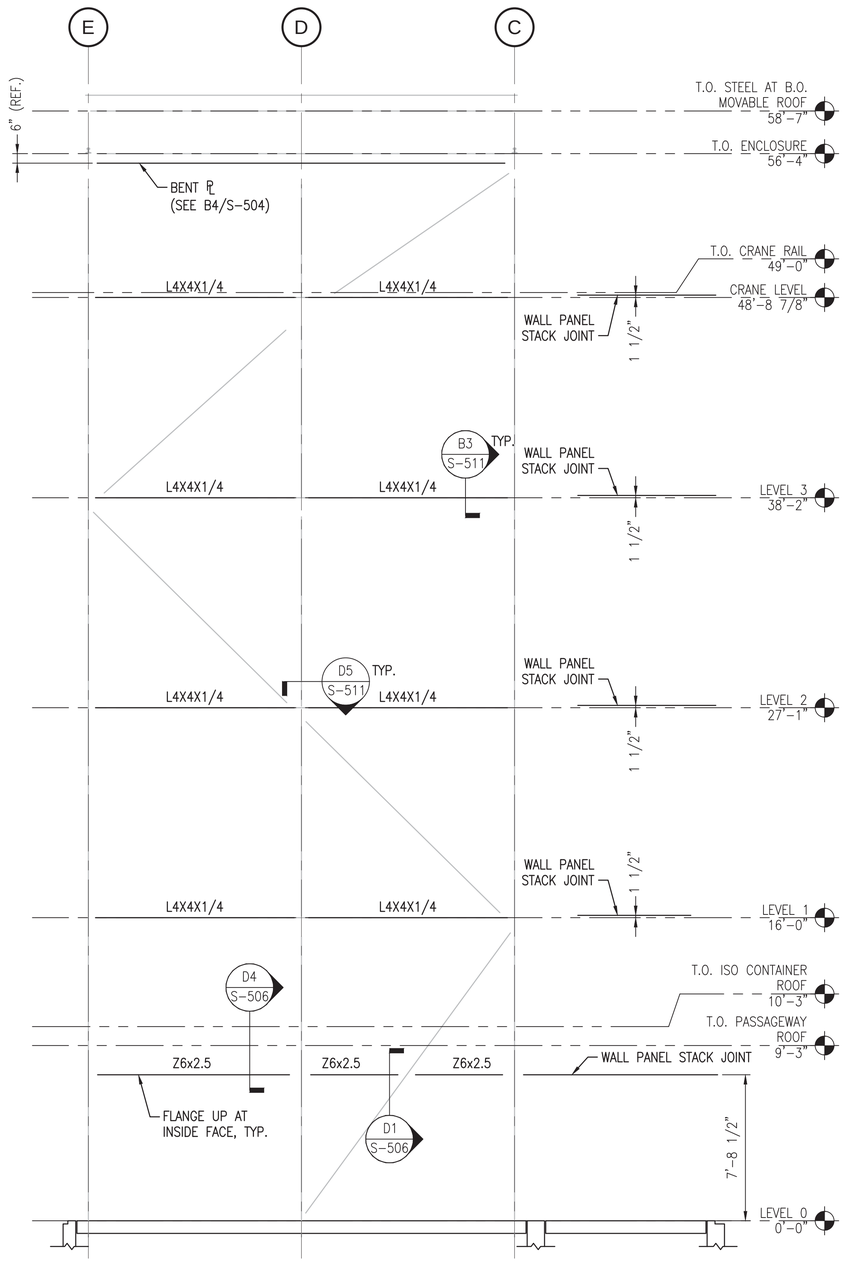

INTERIOR GIRT ELEVATION AT COLUMN LINE 1 WITHOUT STORAGE ENCLOSURE

SCALE: 1/4"=1'-0"

S-101, S-102, S-103, S-104, S-105, S-106

A3

NOTES

1. SEE S-001 FOR NOTES.
2. U.N.O. FACE OF ALL GIRTS (L4x4, C7, ETC.) EXTEND OUT 0'-5" FROM COLUMN ℄.

0 2' 4' 8'
Scale: 1/4" = 1'-0"

SYM	DESCRIPTION	DATE	APPR
0	ISSUED FOR CONSTRUCTION	10/28/2016	CBC

NAVFAC

STATE OF MAINE
BRIAN J. BEAULIEU
No. 12004
LICENSED
PROFESSIONAL ENGINEER
10/28/16
SEAL

Colby Company engineering
A/E INFO

APPROVED
Daniel W. Greenfield
FOR COMMANDER NAVFAC

ACTIVITY
TIM FISHER
C. 2370.6 BRANCH HEAD

SATISFACTORY TO DATE 10/28/2016

DES DS | DRW ERB | CHK CBC

PMDM PETER STOCKLESS
BRANCH MANAGER IAN BODWELL
FEAD/PM&E AMIN BAHROUR
FIRE PROTECTION PATRICK BAKAJ

DEPARTMENT OF THE NAVY
NAVAL FACILITIES ENGINEERING COMMAND
PUBLIC WORKS DEPARTMENT - MAINE
NAVAL FACILITIES ENGINEERING COMMAND ~ MID-ATLANTIC
NAVAL SHIPYARD - PORTSMOUTH, NH
PORTSMOUTH NAVAL SHIPYARD
KITTERY, ME
DRY DOCK #1 DEFUELING COMPLEX
DRE-7
INTERIOR FRAMING ELEVATION AT COLUMN LINE 1 (NO STORAGE ANNEX)

EPROJECT NO.: 1363311
CONSTR. CONTR. NO. N40085-17-C-5002
NAVFAC DRAWING NO. 12735003
SHEET 32 OF 117

S-211 | DD1-16-1084

DRAWFORM REVISION: 10 OCTOBER 2014

10/28/2016 6:57:58 AM X:\297 PORTSMOUTH NAVAL SHIPYARD\297.005.001 - DD#1 DEFUELING COMPLEX DESIGN\DRAWINGS\DRE7\SHEETS\S-211.DWG

NOTES

1. SEE S-001 FOR NOTES.
2. U.N.O. FACE OF ALL GIRTS (L4x4, C7, ETC.) EXTEND OUT 0'-5" FROM COLUMN ℄.

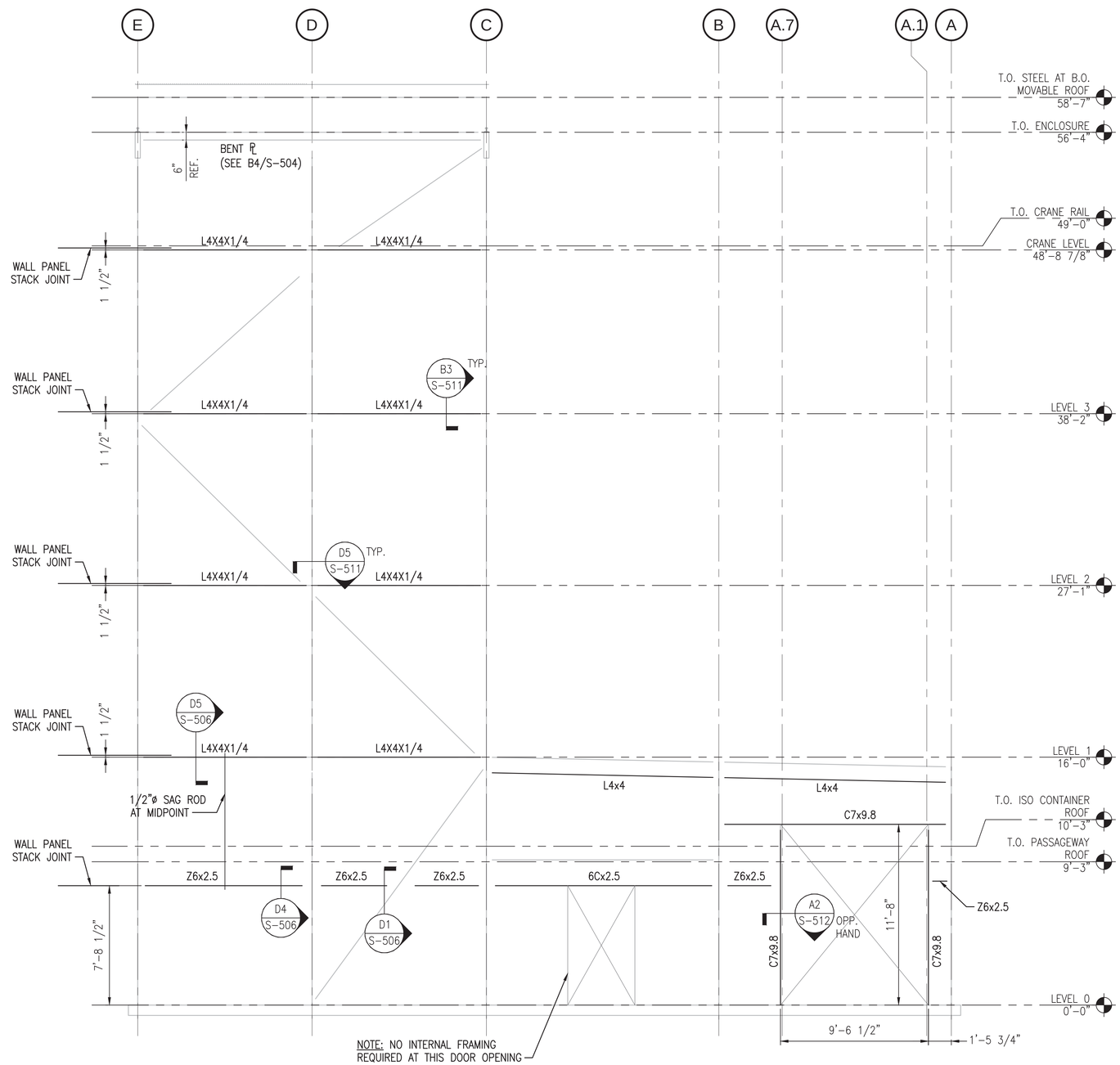

INTERIOR GIRT ELEVATION AT COLUMN LINE 1

SCALE: 1/4"=1'-0"

S-101A A3

0 2' 4' 8'
Scale: 1/4" = 1'-0"

SYM	DESCRIPTION	DATE	APPR
0	ISSUED FOR CONSTRUCTION	10/28/2016	CBC

NAVFAC

STATE OF MAINE
BRIAN J. BEAULIEU
No. 12004
LICENSED PROFESSIONAL ENGINEER
10/28/16
SEAL

Colby Company engineering
A/E INFO

APPROVED
Daniel W. Greenfield
FOR COMMANDER NAVFAC

ACTIVITY
TIM FISHER
C. 2370.6 BRANCH HEAD

SATISFACTORY TO DATE 10/28/2016
DES DS DRW ERB CHK CBC
PMDM PETER STOCKLESS
BRANCH MANAGER IAN BODWELL
FEAD/PM&E AMIN BAHROUR
FIRE PROTECTION PATRICK BAKAJ

DEPARTMENT OF THE NAVY
NAVAL FACILITIES ENGINEERING COMMAND
PUBLIC WORKS DEPARTMENT - MAINE
NAVAL FACILITIES ENGINEERING COMMAND ~ MID-ATLANTIC
NAVAL SHIPYARD - PORTSMOUTH, NH
PORTSMOUTH NAVAL SHIPYARD
KITTERY, ME
DRY DOCK #1 DEFUELING COMPLEX
DRE-7
INTERIOR FRAMING ELEVATION AT COLUMN LINE 1

EPROJECT NO.: 1363311
CONSTR. CONTR. NO. N40085-17-C-5002
NAVFAC DRAWING NO. 12735004
SHEET 33 OF 117
S-211A DD1-16-1085

DRAWFORM REVISION: 10 OCTOBER 2014

10/28/2016 6:58:02 AM X:\297 PORTSMOUTH NAVAL SHIPYARD\297.005.001 - DD#1 DEFUELING COMPLEX DESIGN\DRAWINGS\DRE7\SHEETS\S-211A.DWG

NOTES

1. SEE S-001 FOR NOTES.
2. U.N.O. FACE OF ALL GIRTS (L4x4, C7, ETC.) EXTEND OUT 0'-5" FROM COLUMN ℄.

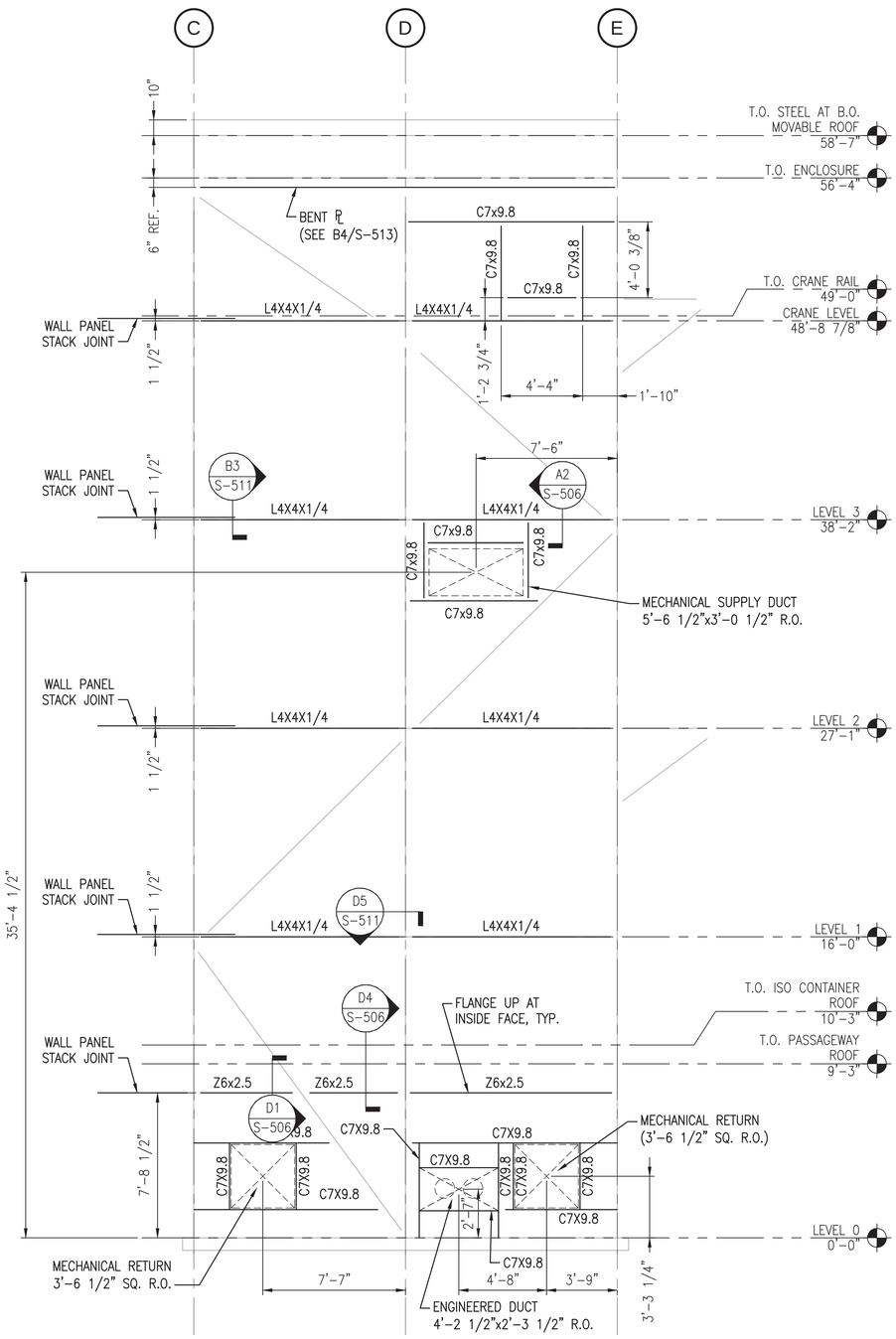

INTERIOR GIRT ELEVATION AT COLUMN LINE 3 WITHOUT STORAGE ANNEX

SCALE: 1/4"=1'-0"

S-101, S-102, S-103, S-104, S-105, S-106

A3

0 2' 4' 8'
Scale: 1/4" = 1'-0"

SYM	DESCRIPTION	DATE	APPR
0	ISSUED FOR CONSTRUCTION	10/28/2016	CBC

NAVFAC

STATE OF MAINE
BRIAN J. BEAULIEU
No. 12004
LICENSED
PROFESSIONAL ENGINEER
10/28/16
SEAL

Colby Company engineering
A/E INFO

APPROVED
Daniel W. Greenfield
FOR COMMANDER NAVFAC

ACTIVITY
TIM FISHER
C. 2370.6 BRANCH HEAD

SATISFACTORY TO DATE 10/28/2016

DES DS | DRW ERB | CHK CBC

PMDM PETER STOCKLESS
BRANCH MANAGER IAN BODWELL
FEAD/PM&E AMIN BAHROUR
FIRE PROTECTION PATRICK BAKAJ

DEPARTMENT OF THE NAVY
NAVAL FACILITIES ENGINEERING COMMAND
PUBLIC WORKS DEPARTMENT - MAINE
NAVAL FACILITIES ENGINEERING COMMAND ~ MID-ATLANTIC
NAVAL SHIPYARD - PORTSMOUTH, NH
PORTSMOUTH NAVAL SHIPYARD
KITTERY, ME
DRY DOCK #1 DEFUELING COMPLEX
DRE-7
INTERIOR FRAMING ELEVATION AT COLUMN LINE 3 (NO STORAGE ANNEX)

EPROJECT NO.: 1363311
CONSTR. CONTR. NO. N40085-17-C-5002
NAVFAC DRAWING NO. 12735005
SHEET 34 OF 117

S-212 | DD1-16-1086

DRAWFORM REVISION: 10 OCTOBER 2014

10/28/2016 6:58:06 AM X:\297 PORTSMOUTH NAVAL SHIPYARD\297.005.001 - DD#1 DEFUELING COMPLEX DESIGN\DRAWINGS\DRE\TSHEETS\S-212.DWG

NOTES

1. SEE S-001 FOR NOTES.
2. U.N.O. FACE OF ALL GIRTS (L4x4, C7, ETC.) EXTEND OUT 0'-5" FROM COLUMN ℄.

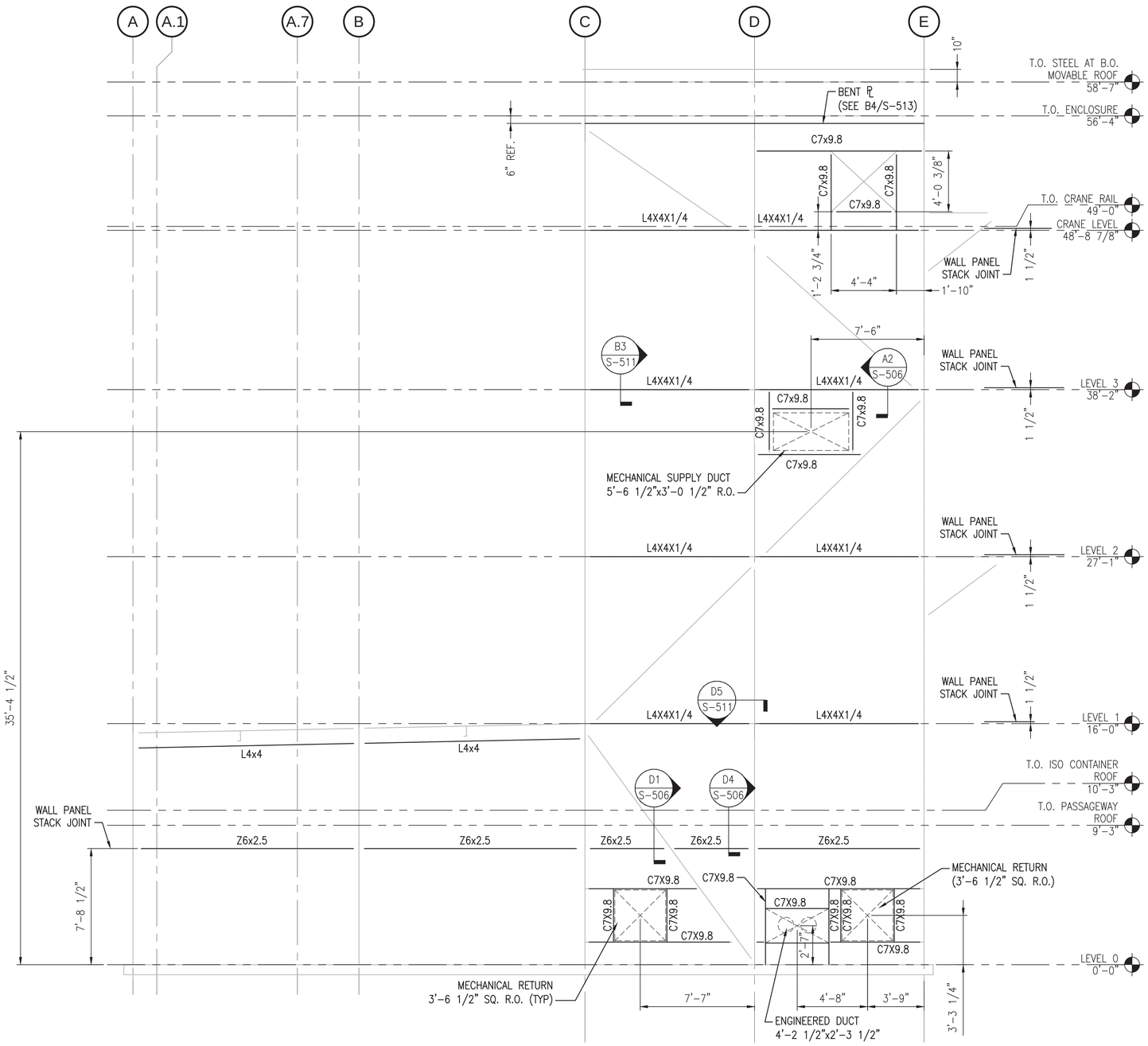

INTERIOR GIRT ELEVATION AT COLUMN LINE 3

SCALE: 1/4"=1'-0"

S-101A A3

0 2' 4' 8'
Scale: 1/4" = 1'-0"

SYM	DESCRIPTION	DATE	APPR
0	ISSUED FOR CONSTRUCTION	10/28/2016	CBC

NAVFAC

STATE OF MAINE
BRIAN J. BEAULIEU
No. 12004
LICENSED PROFESSIONAL ENGINEER
10/28/16
SEAL

Colby Company engineering

A/E INFO

APPROVED
Daniel W. Greenfield
FOR COMMANDER NAVFAC

ACTIVITY
TIM FISHER
C. 2370.6 BRANCH HEAD

SATISFACTORY TO DATE 10/28/2016

DES DS DRW ERB CHK CBC

PMDM PETER STOCKLESS

BRANCH MANAGER IAN BODWELL

FEA/PM&E AMIN BAHROUR

FIRE PROTECTION PATRICK BAKAJ

DEPARTMENT OF THE NAVY
NAVAL FACILITIES ENGINEERING COMMAND
PUBLIC WORKS DEPARTMENT - MAINE

NAVAL FACILITIES ENGINEERING COMMAND ~ MID-ATLANTIC
NAVAL SHIPYARD - PORTSMOUTH, NH

PORTSMOUTH NAVAL SHIPYARD
KITTERY, ME

DRY DOCK #1 DEFUELING COMPLEX
DRE-7

INTERIOR FRAMING ELEVATION AT COLUMN LINE 3

EPROJECT NO.: 1363311

CONSTR. CONTR. NO.
N40085-17-C-5002

NAVFAC DRAWING NO.
12735006

SHEET 35 OF 117

S-212A DD1-16-1087

DRAWFORM REVISION: 10 OCTOBER 2014

10/28/2016 6:58:10 AM X:\297 PORTSMOUTH NAVAL SHIPYARD\297.005.001 - DD#1 DEFUELING COMPLEX DESIGN\DRAWINGS\DRE7\SHEETS\S-212A.DWG

NOTES

1. SEE S-001 FOR NOTES.
2. U.N.O. FACE OF ALL GIRTS (L4x4, C7, ETC.) EXTEND OUT 0'-5" FROM COLUMN ℄.

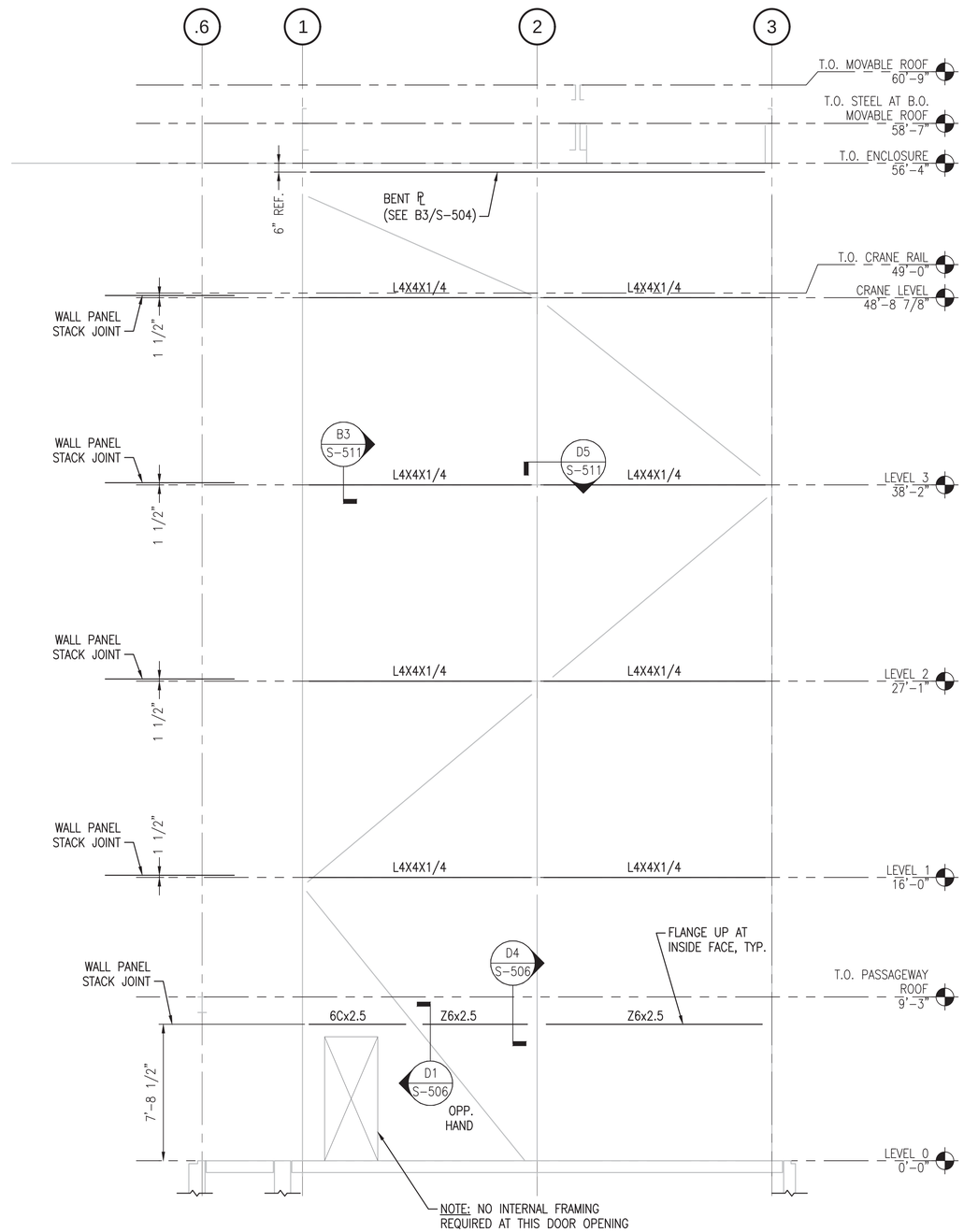

INTERIOR GIRT ELEVATION AT COLUMN LINE C WITHOUT STORAGE ANNEX

SCALE: 1/4"=1'-0"

S-101, S-102, S-103, S-104, S-105, S-106

A4

0 2' 4' 8'
Scale: 1/4" = 1'-0"

SYM	DESCRIPTION	DATE	APPR
0	ISSUED FOR CONSTRUCTION	10/28/2016	CBC

NAVFAC

STATE OF MAINE
BRIAN J. BEAULIEU
No. 12004
LICENSED
PROFESSIONAL ENGINEER
10/28/16
SEAL

Colby Company engineering
A/E INFO

APPROVED
Date Signed
David W. Greenfield
FOR COMMANDER NAVFAC

ACTIVITY
TIM FISHER
C. 2370.6 BRANCH HEAD

SATISFACTORY TO DATE 10/28/2016

DES	DS	DRW	ERB	CHK	CBC

PMDM PETER STOCKLESS
BRANCH MANAGER IAN BODWELL
FEA/DPM&E AMIN BAHROUR
FIRE PROTECTION PATRICK BAKAJ

DEPARTMENT OF THE NAVY
NAVAL FACILITIES ENGINEERING COMMAND
PUBLIC WORKS DEPARTMENT, MAINE
NAVAL FACILITIES ENGINEERING COMMAND ~ MID-ATLANTIC
NAVAL SHIPYARD, PORTSMOUTH, NH
PORTSMOUTH NAVAL SHIPYARD
KITTERY, ME
DRY DOCK #1 DEFUELING COMPLEX
DRE-7
INTERIOR FRAMING LINE ELEVATIONS AT COLUMN LINES A AND C (NO STORAGE ANNEX)

EPROJECT NO.: 1363311
CONSTR. CONTR. NO. N40085-17-C-5002
NAVFAC DRAWING NO. 12735007
SHEET 36 OF 117
S-213 DD1-16-1088

DRAWFORM REVISION: 10 OCTOBER 2014

10/28/2016 6:58:14 AM X:\297 PORTSMOUTH NAVAL SHIPYARD\297.005.001 - DD#1 DEFUELING COMPLEX DESIGN\DRAWINGS\DRE7\SHEETS\S-213.DWG

NOTES

1. SEE S-001 FOR NOTES.
2. U.N.O. FACE OF ALL GIRTS (L4x4, C7, ETC.) EXTEND OUT 0'-5" FROM COLUMN ℄.

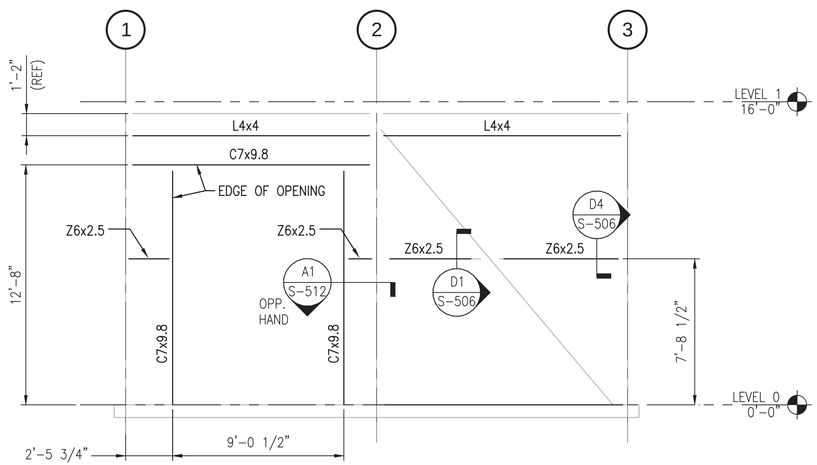

INTERIOR GIRT ELEVATION AT COLUMN LINE A (C1)

SCALE: 1/4"=1'-0" S-101A

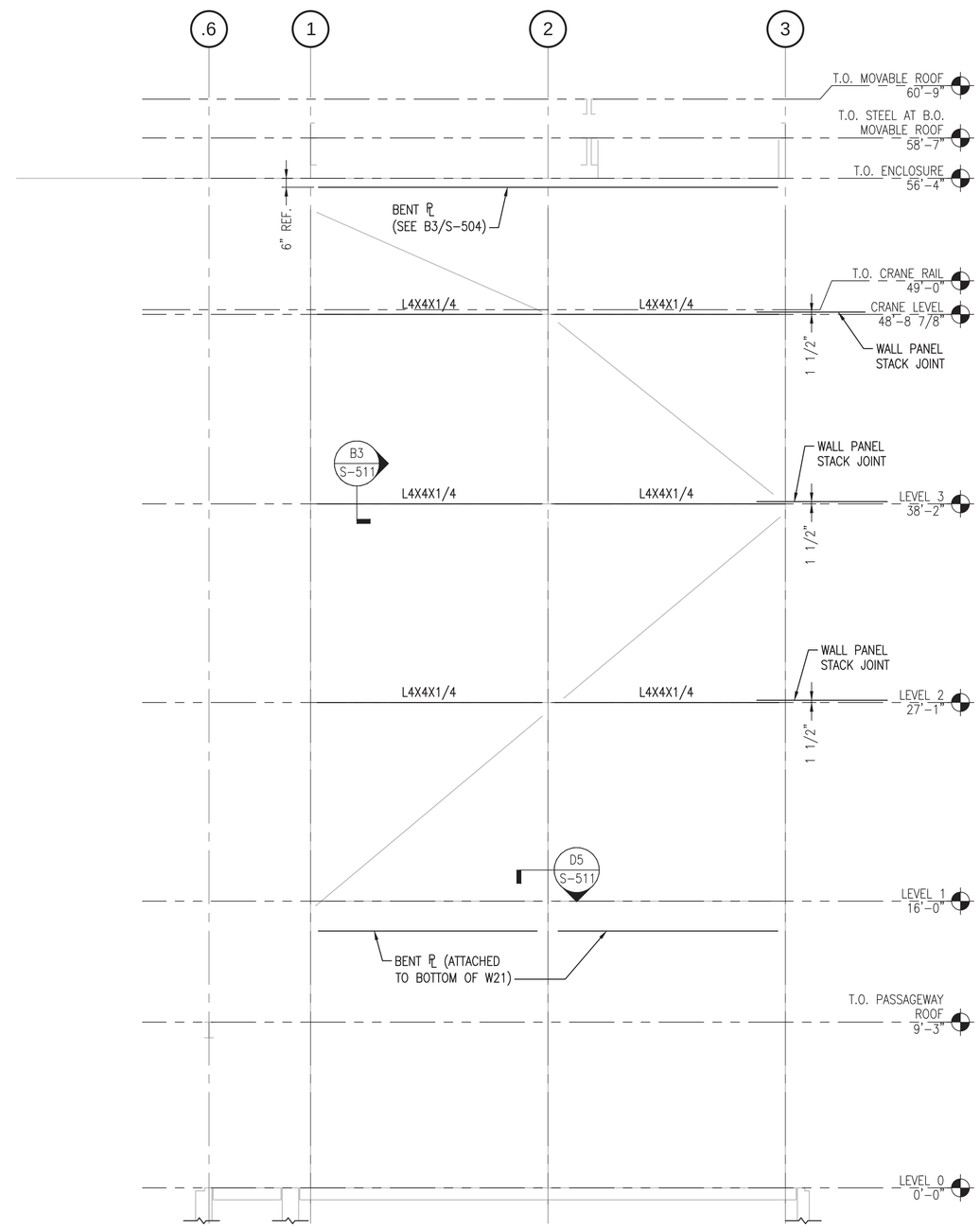

INTERIOR GIRT ELEVATION AT COLUMN LINE C (A4)

SCALE: 1/4"=1'-0" S-101A

0 2' 4' 8'
Scale: 1/4" = 1'-0"

SYM	DESCRIPTION	DATE	APPR
0	ISSUED FOR CONSTRUCTION	10/28/2016	CBC

NAVFAC

STATE OF MAINE
BRIAN J. BEAULIEU
No. 12004
LICENSED PROFESSIONAL ENGINEER
10/28/16
SEAL

Colby Company engineering

A/E INFO

APPROVED
Daniel W. Greenfield
FOR COMMANDER NAVFAC

ACTIVITY
TIM FISHER
C. 2370.6 BRANCH HEAD

SATISFACTORY TO DATE 10/28/2016

DES DS DRW ERB CHK CBC

PM/DM PETER STOCKLESS

BRANCH MANAGER IAN BODWELL

FEAD/PM&E AMIN BAHROUR

FIRE PROTECTION PATRICK BAKAJ

DEPARTMENT OF THE NAVY
NAVAL FACILITIES ENGINEERING COMMAND
PUBLIC WORKS DEPARTMENT - MAINE

NAVAL FACILITIES ENGINEERING COMMAND ~ MID-ATLANTIC
NAVAL SHIPYARD - PORTSMOUTH, NH

PORTSMOUTH NAVAL SHIPYARD
KITTERY, ME

DRY DOCK #1 DEFUELING COMPLEX
DRE-7

INTERIOR FRAMING ELEVATIONS AT COLUMN LINES A AND C

EPROJECT NO.: 1363311

CONSTR. CONTR. NO.
N40085-17-C-5002

NAVFAC DRAWING NO.
12735008

SHEET 37 OF 117

S-213A DD1-16-1089

DRAWFORM REVISION: 10 OCTOBER 2014

10/28/2016 6:58:18 AM X:\297 PORTSMOUTH NAVAL SHIPYARD\297.005.001 - DD#1 DEFUELING COMPLEX DESIGN\DRAWINGS\DRE\SHEETS\S-213A.DWG

NOTES

1. SEE S-001 FOR NOTES.
2. U.N.O. FACE OF ALL GIRTS (L4x4, C7, ETC.) EXTEND OUT 0'-5" FROM COLUMN ℄.

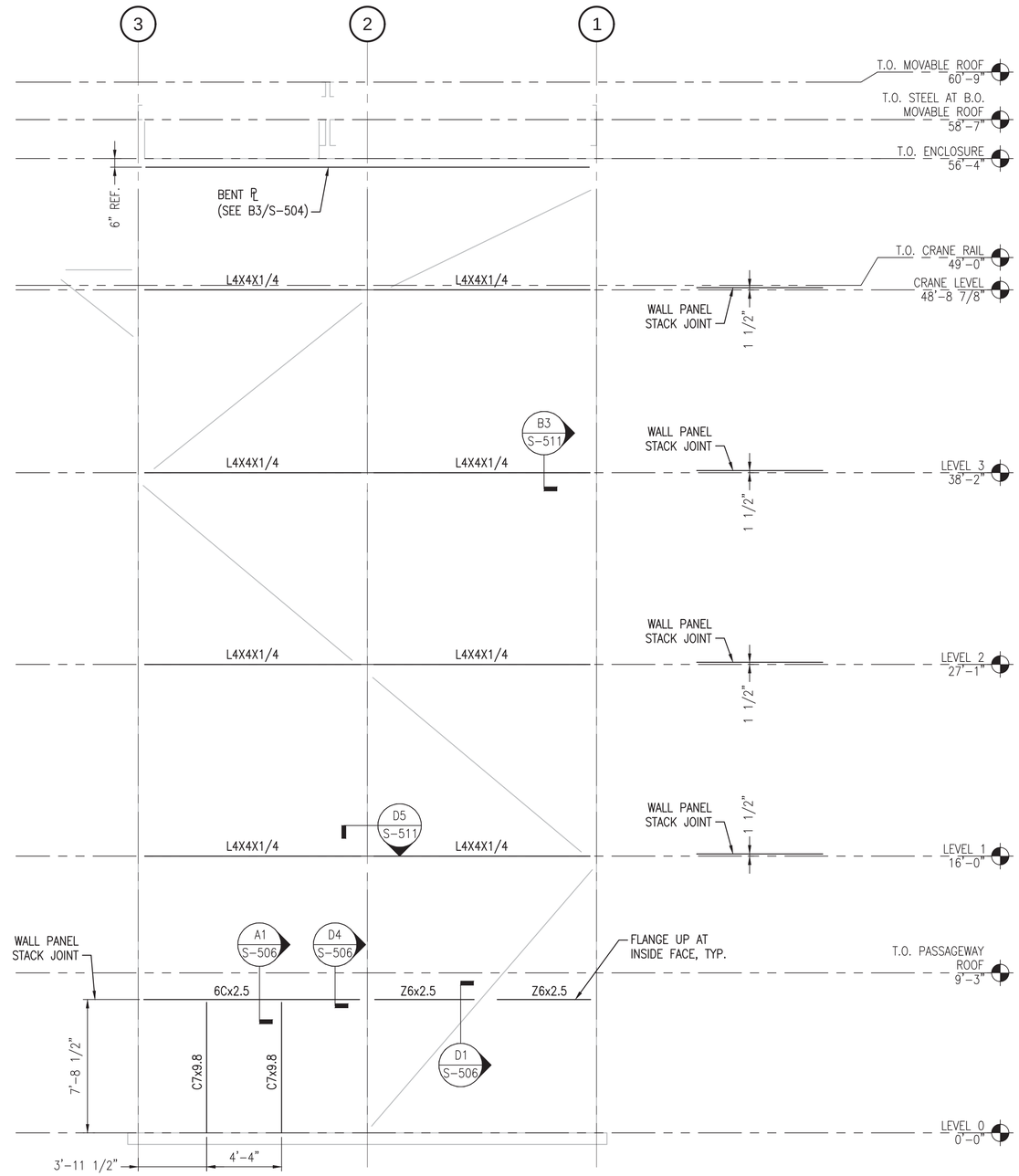

INTERIOR GIRT ELEVATION AT COLUMN LINE E

SCALE: 1/4"=1'-0" S-101, S-101A, S-102, S-103, S-104, S-105, S-106 A3

0 2' 4' 8'
Scale: 1/4" = 1'-0"

SYM	DESCRIPTION	DATE	APPR
0	ISSUED FOR CONSTRUCTION	10/28/2016	CBC

NAVFAC

STATE OF MAINE
BRIAN J. BEAULIEU
No. 12004
LICENSED
PROFESSIONAL ENGINEER
10/28/16
SEAL

Colby Company engineering
A/E INFO

APPROVED
Daniel W. Greenfield
FOR COMMANDER NAVFAC

ACTIVITY
TIM FISHER
C. 2370.6 BRANCH HEAD

SATISFACTORY TO DATE 10/28/2016
DES DS DRW ERB CHK CBC
PMDM PETER STOCKLESS
BRANCH MANAGER IAN BODWELL
FEA/PM&E AMIN BAHROUR
FIRE PROTECTION PATRICK BAKAJ

DEPARTMENT OF THE NAVY
NAVAL FACILITIES ENGINEERING COMMAND
PUBLIC WORKS DEPARTMENT - MAINE

NAVAL FACILITIES ENGINEERING COMMAND ~ MID-ATLANTIC
NAVAL SHIPYARD - PORTSMOUTH, NH

PORTSMOUTH NAVAL SHIPYARD
KITTERY, ME
DRY DOCK #1 DEFUELING COMPLEX
DRE-7

INTERIOR FRAMING ELEVATION AT COLUMN LINE E

EPROJECT NO.: 1363311
CONSTR. CONTR. NO. N40085-17-C-5002
NAVFAC DRAWING NO. 12735009
SHEET 38 OF 117

S-214 DD1-16-1090

DRAWFORM REVISION: 10 OCTOBER 2014

10/28/2016 6:58:22 AM X:\297 PORTSMOUTH NAVAL SHIPYARD\297.005.001 - DD#1 DEFUELING COMPLEX DESIGN\DRAWINGS\DRE7\SHEETS\S-214.DWG

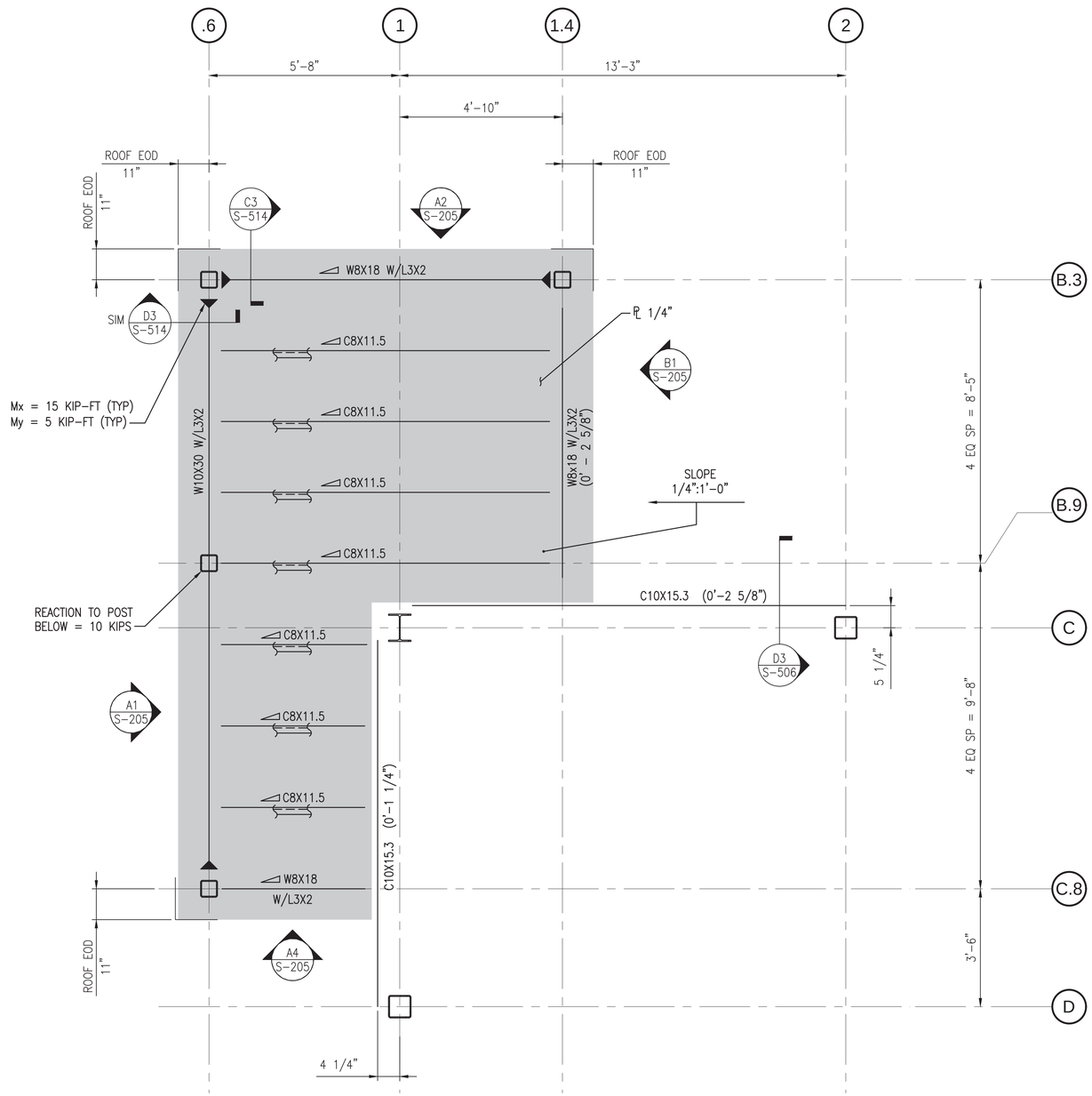

PART PLAN AT PASSAGEWAY

SCALE: 1/2" = 1'-0" S-101 A2

T.O.S. EL. 9'-3" U.N.O.

ROOF LIVE LOAD = 20PSF (SEE S-001 FOR DESIGN SNOW LOADS)

NOTES

1. SEE S-001 FOR GENERAL NOTES

FRAMING LEGEND

DENOTES 1/4" STEEL PLATE, SEAM WELDED TO ADJACENT PLATES, INTERMITTENT WELDS TO STRUCTURE BELOW EXCEPT SEAM WELDED WHERE REQUIRED FOR WEATHER RESISTANCE.

( ) DENOTES STEEL ELEVATION DIFFERENCE FROM T.O.S. REF. IN PLAN TITLE

Scale: 1/4" = 1'-0"

SYM	DESCRIPTION	DATE	APPR
0	ISSUED FOR CONSTRUCTION	10/28/2016	CBC

NAVFAC

STATE OF MAINE
BRIAN J. BEAULIEU
No. 12004
LICENSED PROFESSIONAL ENGINEER
10/28/16
SEAL

Colby Company engineering
A/E INFO

APPROVED
Daniel W. Greenfield
FOR COMMANDER NAVFAC

ACTIVITY
TIM FISHER
C. 2370.6 BRANCH HEAD

SATISFACTORY TO DATE 10/28/2016

DES DS DRW ERB CHK CBC

PM/DM PETER STOCKLESS

BRANCH MANAGER IAN BODWELL

FEA/DPM&E AMIN BAHROUR

FIRE PROTECTION PATRICK BAKAJ

DEPARTMENT OF THE NAVY
NAVAL FACILITIES ENGINEERING COMMAND
PUBLIC WORKS DEPARTMENT - MAINE

NAVAL FACILITIES ENGINEERING COMMAND – MID-ATLANTIC
NAVAL SHIPYARD - PORTSMOUTH, NH

PORTSMOUTH NAVAL SHIPYARD
KITTERY, ME

DRY DOCK #1 DEFUELING COMPLEX
DRE-7

PARTIAL FRAMING PLANS (NO STORAGE ANNEX)

EPROJECT NO.: 1363311

CONSTR. CONTR. NO. N40085-17-C-5002

NAVFAC DRAWING NO. 12735010

SHEET 39 OF 117

S-401 DD1-16-1091

DRAWFORM REVISION: 10 OCTOBER 2014

10/28/2016 6:58:26 AM X:\297 PORTSMOUTH NAVAL SHIPYARD\297.005.001 - DD#1 DEFUELING COMPLEX DESIGN\DRAWINGS\DRE7\SHEETS\S-401.DWG

NOTES

1. SEE S-001 FOR GENERAL NOTES

FRAMING LEGEND

DENOTES 1/4" STEEL PLATE, SEAM WELDED TO ADJACENT PLATES, INTERMITTENT WELDS TO STRUCTURE BELOW EXCEPT SEAM WELDED WHERE REQUIRED FOR WEATHER RESISTANCE.

( ) DENOTES STEEL ELEVATION DIFFERENCE FROM T.O.S. REF. IN PLAN TITLE

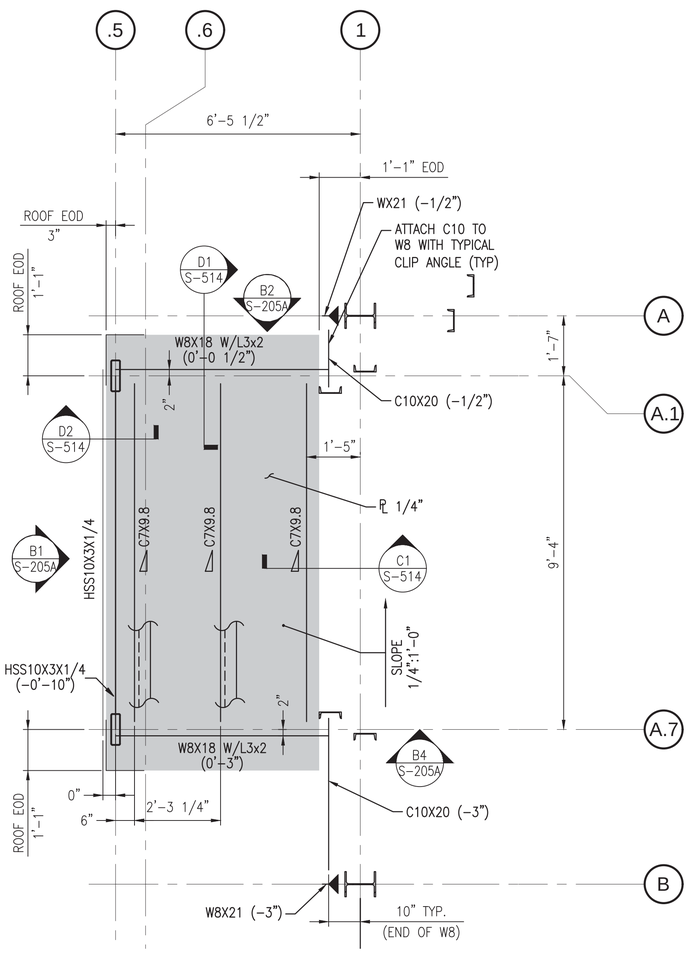

PART PLAN AT ISO CONTAINER ROOF (A1)

SCALE: 1/2" = 1'-0" S-101A

T.O.S. EL. 10'-3" U.N.O.

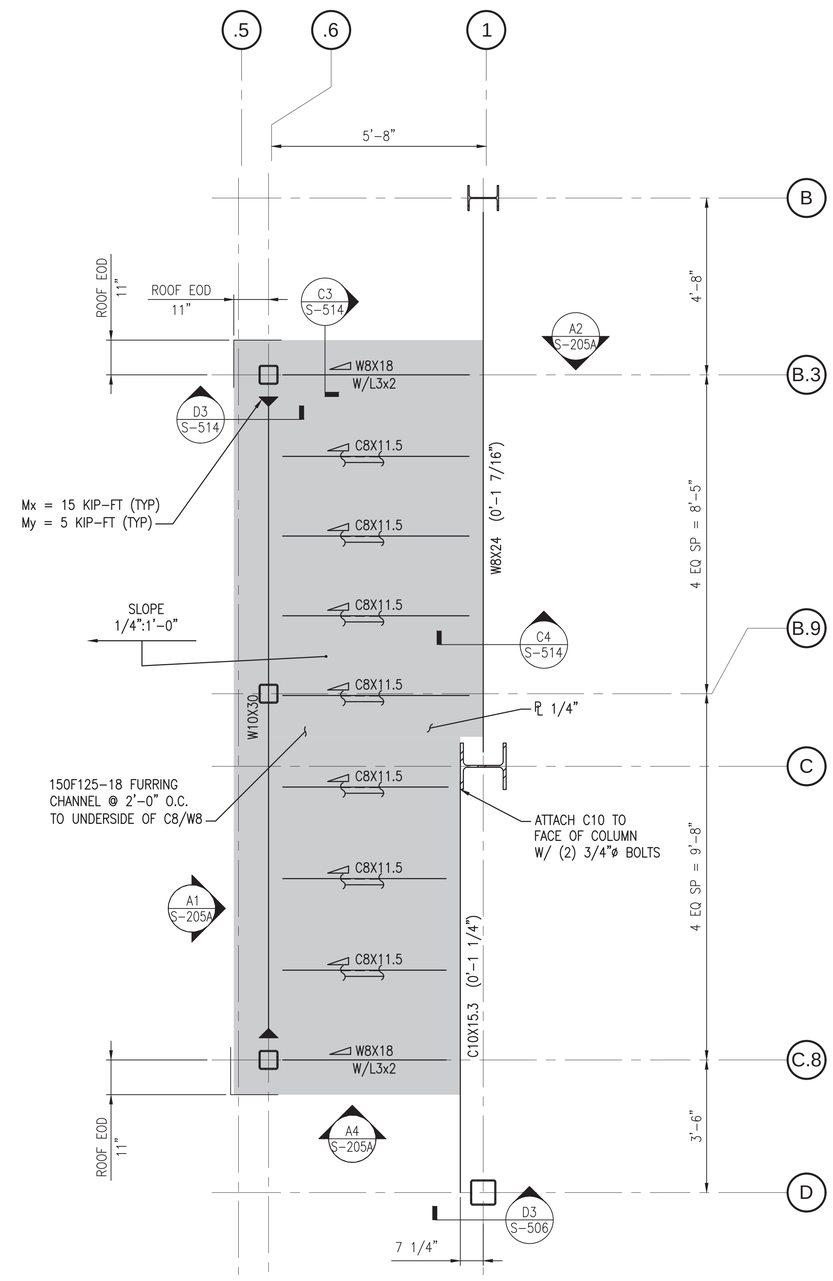

PART PLAN AT PASSAGEWAY (A2)

SCALE: 1/2" = 1'-0" S-101A

T.O.S. EL. 9'-3" U.N.O.

0 2' 4' 8'
Scale: 1/4" = 1'-0"

SYM	DESCRIPTION	DATE	APPR
0	ISSUED FOR CONSTRUCTION	10/28/2016	CBC

NAVFAC

STATE OF MAINE
BRIAN J. BEAULIEU
No. 12004
LICENSED PROFESSIONAL ENGINEER
10/28/16
SEAL

Colby Company engineering
A/E INFO

APPROVED
Date Signature
Darrel W. Greenfield
FOR COMMANDER NAVFAC

ACTIVITY
TIM FISHER
C. 2370.6 BRANCH HEAD

SATISFACTORY TO DATE 10/28/2016
DES DS DRW ERB CHK CBC
PMDM PETER STOCKLESS
BRANCH MANAGER IAN BODWELL
FEAD/PM&E AMIN BAHROUR
FIRE PROTECTION PATRICK BAKAJ

DEPARTMENT OF THE NAVY
NAVAL FACILITIES ENGINEERING COMMAND
PUBLIC WORKS DEPARTMENT - MAINE

NAVAL FACILITIES ENGINEERING COMMAND ~ MID-ATLANTIC
NAVAL SHIPYARD - PORTSMOUTH, NH

PORTSMOUTH NAVAL SHIPYARD
KITTERY, ME

DRY DOCK #1 DEFUELING COMPLEX
DRE-7

PARTIAL FRAMING PLANS

EPROJECT NO.: 1363311

CONSTR. CONTR. NO.
N40085-17-C-5002

NAVFAC DRAWING NO.
12735011

SHEET 40 OF 117

S-401A | DD1-16-1092

DRAWFORM REVISION: 10 OCTOBER 2014

10/28/2016 6:58:30 AM X:\297 PORTSMOUTH NAVAL SHIPYARD\297.005.001 - DD#1 DEFUELING COMPLEX DESIGN\DRAWINGS\DRE7\SHEETS\S-401A.DWG

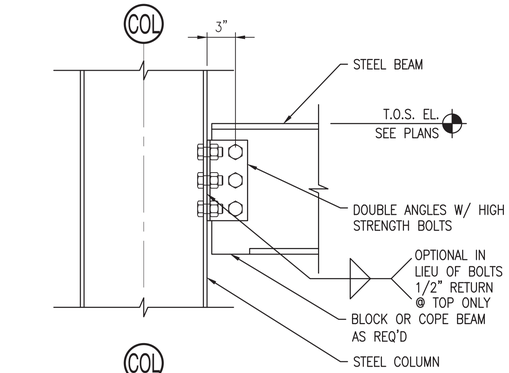

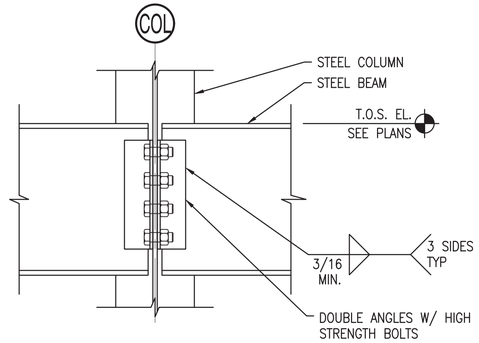

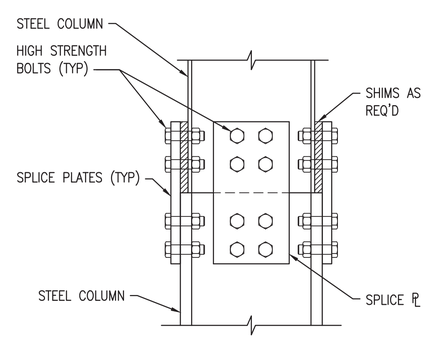

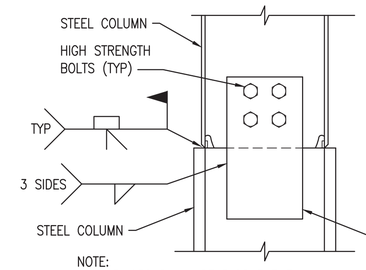

NOTE:
1. SPLICES SHALL DEVELOP THE FULL AXIAL CAPACITY OF THE COLUMN, OR AS SHOWN ON S-600 FOR TENSILE (UPLIFT) DESIGN

NOTES

1. SEE S-001 FOR NOTES.

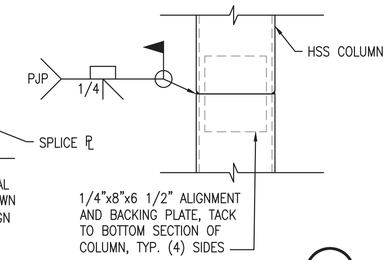

TYP. COLUMN SPLICE (D4)

SCALE: 1 1/2"=1'-0"

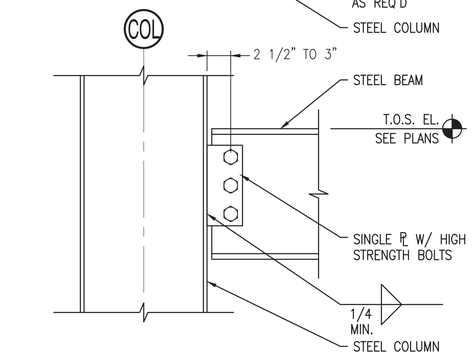

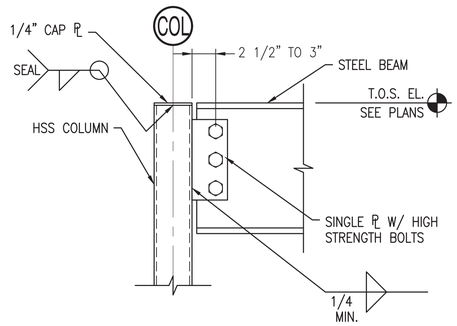

TYP. W-SHAPE / CHANNEL BEAM TO COLUMN SHEAR CONNECTION (C2)

SCALE: 1 1/2"=1'-0"

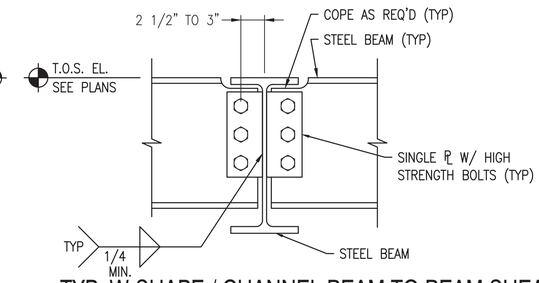

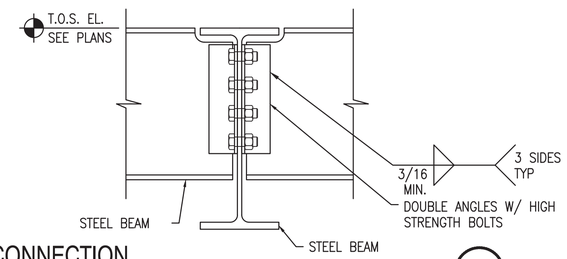

TYP. W-SHAPE / CHANNEL BEAM TO BEAM SHEAR CONNECTION (C4)

SCALE: 1 1/2"=1'-0"

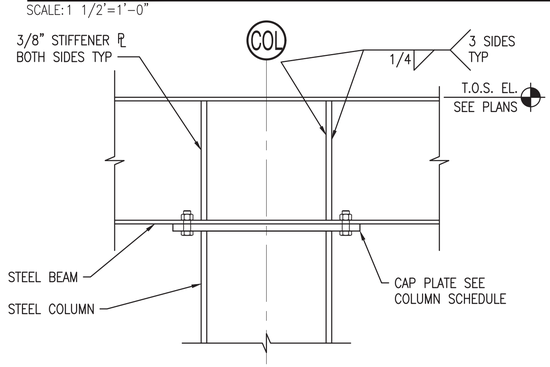

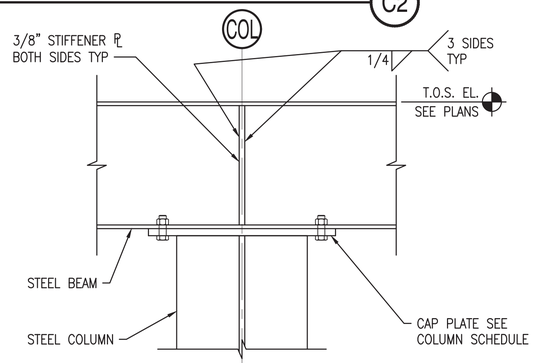

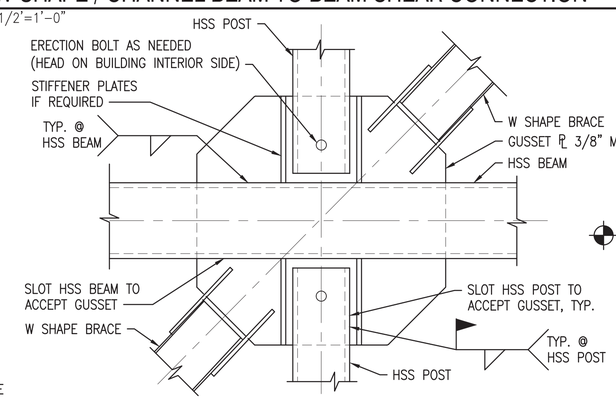

TYP. HSS POST TO HSS BEAM CONN (POST ABOVE & BELOW) (B3)

SCALE: 1 1/2"=1'-0"

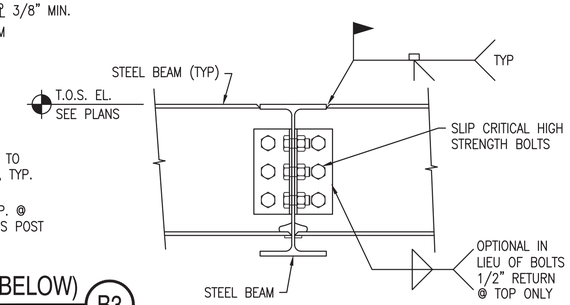

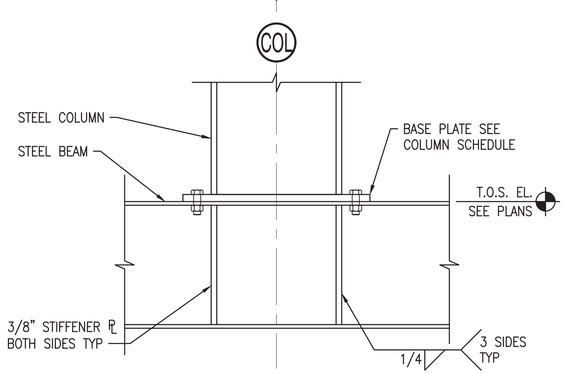

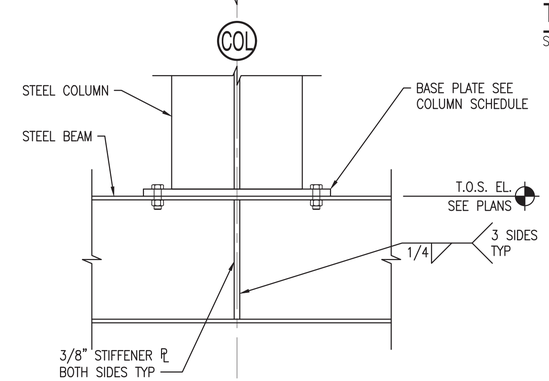

TYP. W-SHAPE BEAM TO W-SHAPE COLUMN CONNECTION (A2)

SCALE: 1 1/2"=1'-0"

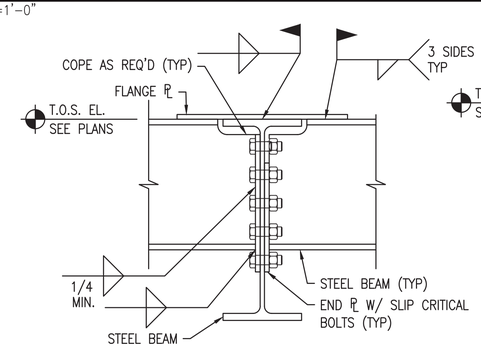

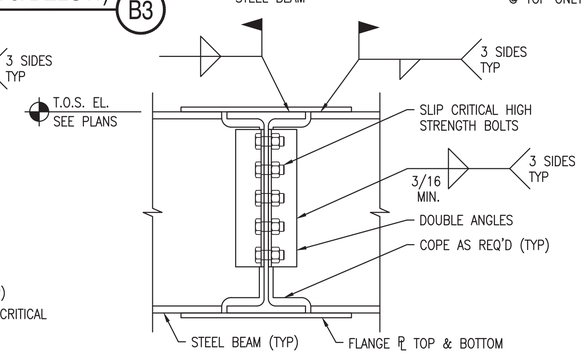

TYP. W-SHAPE BEAM TO W-SHAPE BEAM MOMENT CONNECTIONS (A4)

SCALE: 1 1/2"=1'-0"

0 1/2' 1' 1 1/2'
Scale: 1 1/2" = 1'-0"

SYM	DESCRIPTION	DATE	APPR
0	ISSUED FOR CONSTRUCTION	10/28/2016	CBC

NAVFAC

STATE OF MAINE
BRIAN J. BEAULIEU
No. 12004
LICENSED PROFESSIONAL ENGINEER
10/28/16
SEAL

Colby Company engineering
A/E INFO

APPROVED
Daniel W. Greenfield
FOR COMMANDER NAVFAC

ACTIVITY:
TIM FISHER
C. 2370.6 BRANCH HEAD

SATISFACTORY TO DATE 10/28/2016
DES DS DRW BCH CHK CBC
PMDM PETER STOCKLESS
BRANCH MANAGER IAN BODWELL
FEAD/PM&E AMIN BAHROUR
FIRE PROTECTION PATRICK BAKAJ

DEPARTMENT OF THE NAVY
NAVAL FACILITIES ENGINEERING COMMAND
PUBLIC WORKS DEPARTMENT - MAINE
NAVAL FACILITIES ENGINEERING COMMAND ~ MID-ATLANTIC
NAVAL SHIPYARD - PORTSMOUTH, NH
PORTSMOUTH NAVAL SHIPYARD
KITTERY, ME
DRY DOCK #1 DEFUELING COMPLEX
DRE-7
TYPICAL STEEL DETAILS

EPROJECT NO.: 1363311
CONSTR. CONTR. NO. N40085-17-C-5002
NAVFAC DRAWING NO. 12735012
SHEET 41 OF 117
S-501 | DD1-16-1093

DRAWFORM REVISION: 10 OCTOBER 2014

10/28/2016 6:58:42 AM X:\297 PORTSMOUTH NAVAL SHIPYARD\297.005.001 - DD#1 DEFUELING COMPLEX DESIGN\DRAWINGS\DRE7\SHEETS\S-501.DWG

NOTES

1. SEE S-001 FOR NOTES.

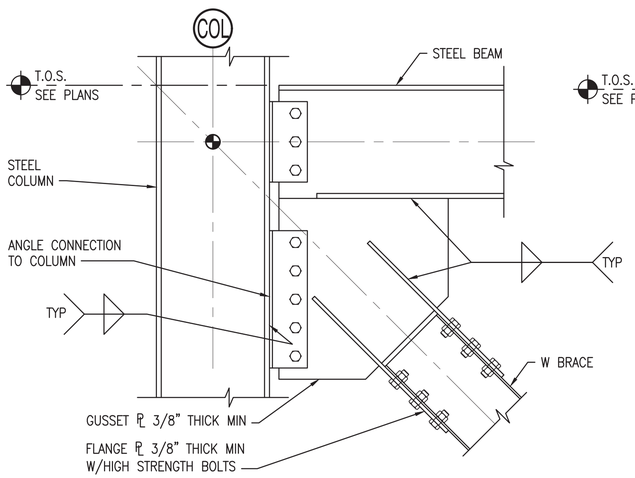

TYP. WIDE FLANGE BRACE AT BEAM AND COLUMN FLANGE (B1)

SCALE: 1 1/2"=1'-0"

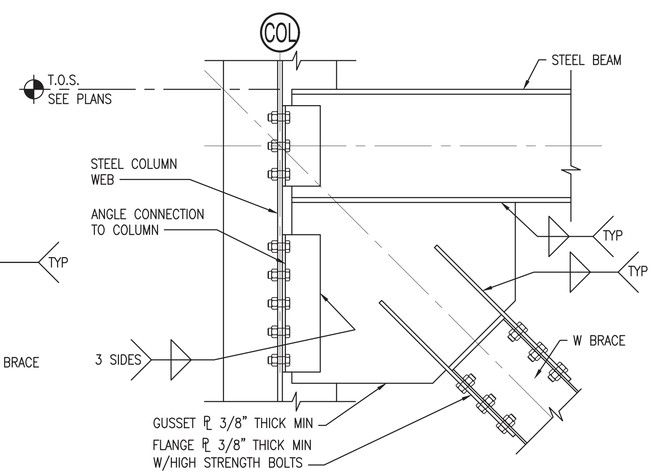

TYP. WIDE FLANGE BRACE AT BEAM AND COLUMN WEB (B3)

SCALE: 1 1/2"=1'-0"

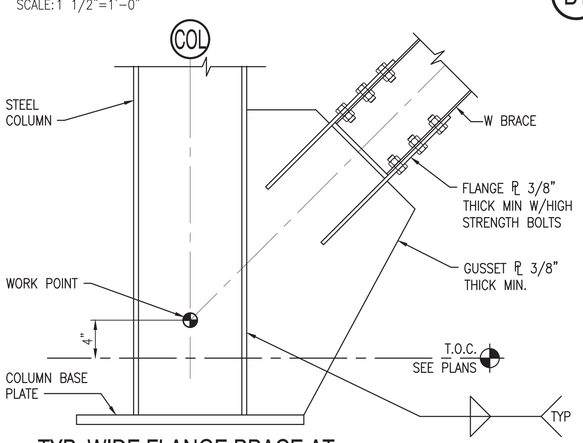

TYP. WIDE FLANGE BRACE AT COLUMN FLANGE AND BASE PLATE (A1)

SCALE: 1 1/2"=1'-0"

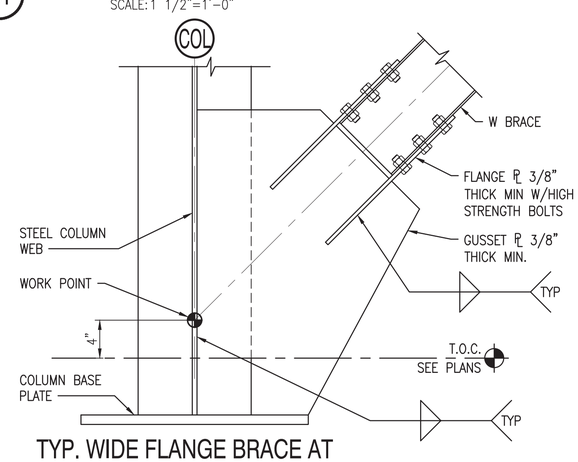

TYP. WIDE FLANGE BRACE AT COLUMN WEB AND BASE PLATE (A3)

SCALE: 1 1/2"=1'-0"

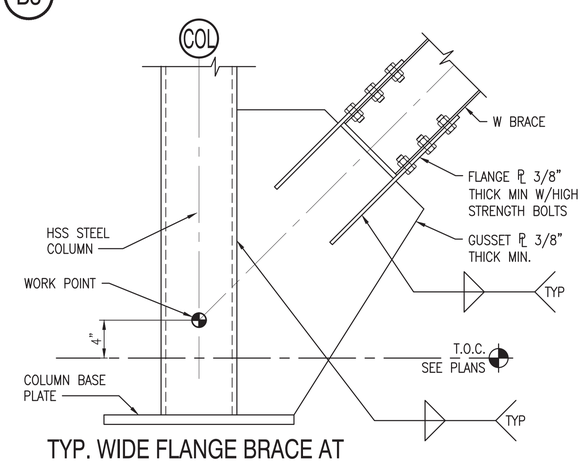

TYP. WIDE FLANGE BRACE AT HSS COLUMN AND BASE PLATE (A4)

SCALE: 1 1/2"=1'-0"

0 1/2' 1' 1 1/2'
Scale: 1 1/2" = 1'-0"

SYM	DESCRIPTION	DATE	APPR
0	ISSUED FOR CONSTRUCTION	10/28/2016	CBC

NAVFAC

STATE OF MAINE
BRIAN J. BEAULIEU
No. 12004
LICENSED
PROFESSIONAL ENGINEER
10/28/16
SEAL

Colby Company engineering

A/E INFO

APPROVED
Daniel W. Greenfield
FOR COMMANDER NAVFAC

ACTIVITY
TIM FISHER
C. 2370.6 BRANCH HEAD

SATISFACTORY TO DATE 10/28/2016

DES DS | DRW BCH | CHK CBC

PM/DM PETER STOCKLESS

BRANCH MANAGER IAN BODWELL

FEA/PM&E AMIN BAHROUR

FIRE PROTECTION PATRICK BAKAJ

DEPARTMENT OF THE NAVY
NAVAL FACILITIES ENGINEERING COMMAND
PUBLIC WORKS DEPARTMENT - MAINE
NAVAL FACILITIES ENGINEERING COMMAND – MID-ATLANTIC
NAVAL SHIPYARD - PORTSMOUTH NH
PORTSMOUTH NAVAL SHIPYARD
KITTERY, ME
DRY DOCK #1 DEFUELING COMPLEX
DRE-7
TYPICAL BRACING CONNECTION DETAILS

EPROJECT NO.: 1363311

CONSTR. CONTR. NO. N40085-17-C-5002

NAVFAC DRAWING NO. 12735013

SHEET 42 OF 117

S-502 | DD1-16-1094

DRAWFORM REVISION: 10 OCTOBER 2014

10/28/2016 6:58:55 AM X:\297 PORTSMOUTH NAVAL SHIPYARD\297.005.001 - DD#1 DEFUELING COMPLEX DESIGN\DRAWINGS\DRE7\SHEETS\S-502.DWG

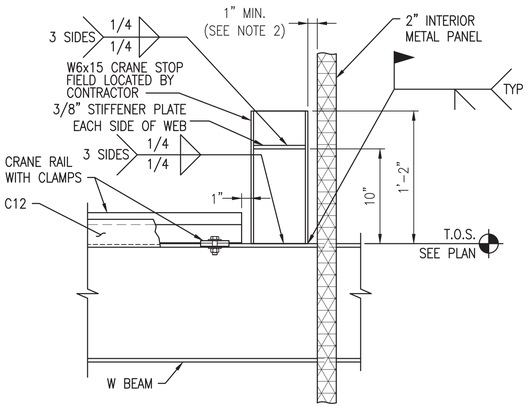

TYP. CRANE STOP DETAIL

SCALE: 1 1/2"=1'-0" S-511 D1

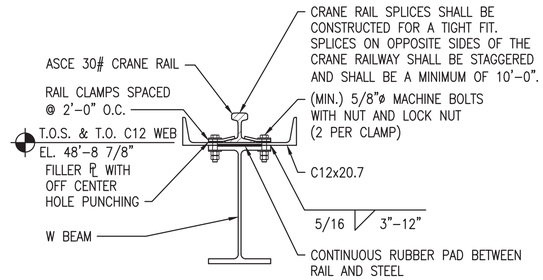

TYP. CRANE RAIL ATTACHMENT DETAIL

SCALE: 1 1/2"=1'-0" S-104 D2

NOTES

1. SEE S-001 FOR NOTES.
2. FINAL LOCATION OF CRANE STOPS TO BE COORDINATED BY CRANE MANUFACTURER. ALLOW FOR CRANE STOPS TO BE FIELD LOCATED.

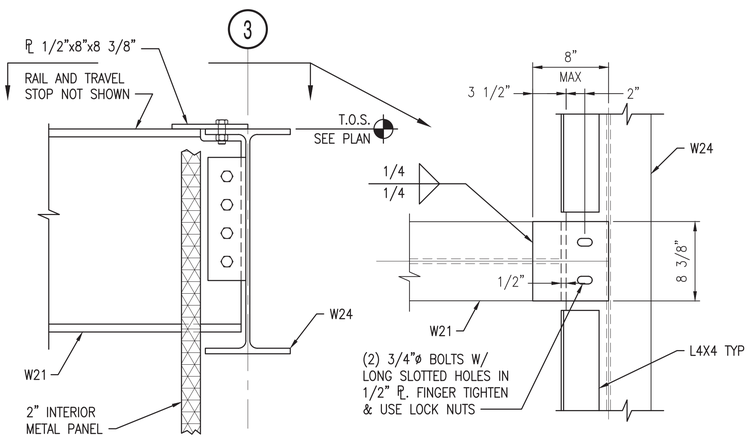

TYP END CONNECTION AT CRANE BEAM

SCALE: 1 1/2"=1'-0" S-104 B1

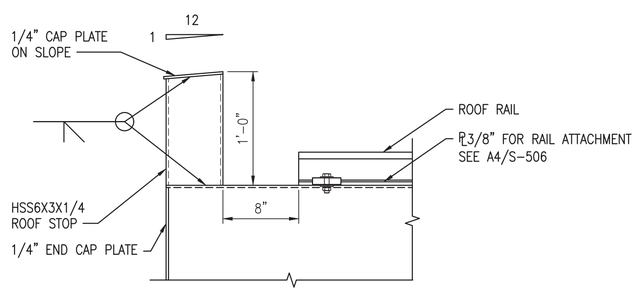

TYPICAL ROOF RAIL STOP DETAIL

SCALE: 1 1/2"=1'-0" S-105 A1

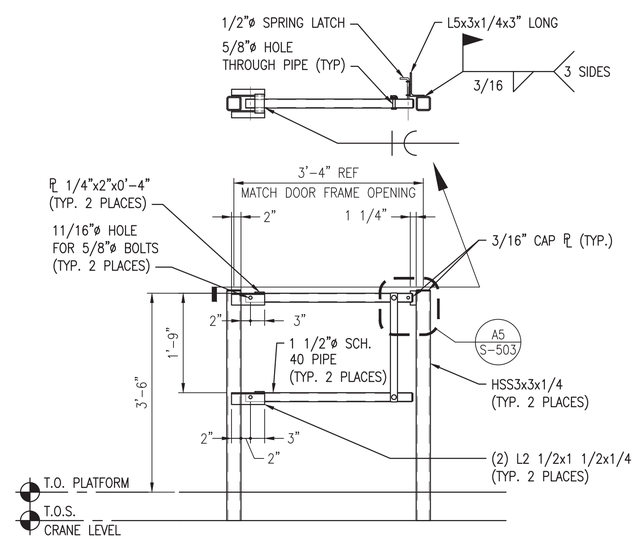

TYP. VERTICAL SAFETY GATE DETAIL

SCALE: 3/4"=1'-0" S-104, S-507 A3

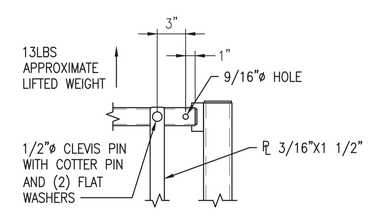

DETAIL

SCALE: 1 1/2"=1'-0" S-503 A5

0 1' 2' 3'
Scale: 3/4" = 1'-0"

0 1/2' 1' 1 1/2'
Scale: 1 1/2" = 1'-0"

SYM	DESCRIPTION	DATE	APPR
0	ISSUED FOR CONSTRUCTION	10/28/2016	CBC

NAVFAC

STATE OF MAINE
BRIAN J. BEAULIEU
No. 12004
LICENSED
PROFESSIONAL ENGINEER
10/28/16
SEAL

Colby Company engineering
A/E INFO

APPROVED
Daniel W. Greenfield
FOR COMMANDER NAVFAC
ACTIVITY
TIM FISHER
C. 2370.6 BRANCH HEAD
SATISFACTORY TO DATE 10/28/2016
DES DS DRW BCH CHK CBC
PM/DM PETER STOCKLESS
BRANCH MANAGER IAN BODWELL
FEA/PM&E AMIN BAHROUR
FIRE PROTECTION PATRICK BAKAJ

DEPARTMENT OF THE NAVY
NAVAL FACILITIES ENGINEERING COMMAND
PUBLIC WORKS DEPARTMENT - MAINE
NAVAL FACILITIES ENGINEERING COMMAND – MID-ATLANTIC
NAVAL SHIPYARD - PORTSMOUTH, NH
PORTSMOUTH NAVAL SHIPYARD
KITTERY, ME
DRY DOCK #1 DEFUELING COMPLEX
DRE-7
CRANE RAIL DETAILS

EPROJECT NO.: 1363311
CONSTR. CONTR. NO. N40085-17-C-5002
NAVFAC DRAWING NO. 12735014
SHEET 43 OF 117
S-503 DD1-16-1095

DRAWFORM REVISION: 10 OCTOBER 2014

10/28/2016 6:59:14 AM X:\297 PORTSMOUTH NAVAL SHIPYARD\297.005.001 - DD#1 DEFUELING COMPLEX DESIGN\DRAWINGS\DRE7\SHEETS\S-503.DWG

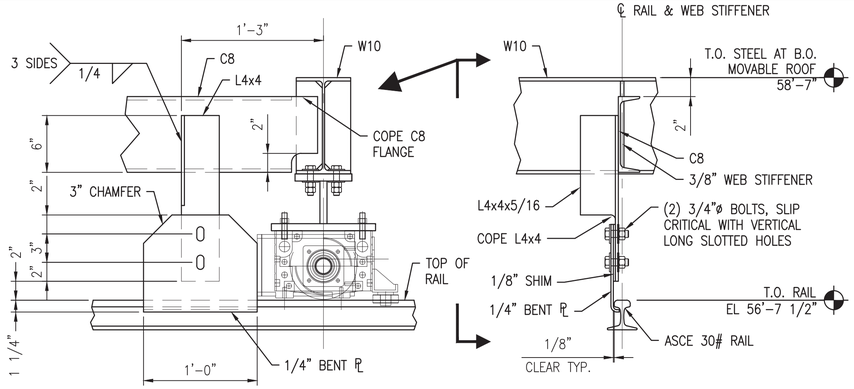

MOVABLE ROOF HOLD DOWN DETAIL (4 REQ'D) D1

SCALE: 1 1/2"=1'-0" S-106

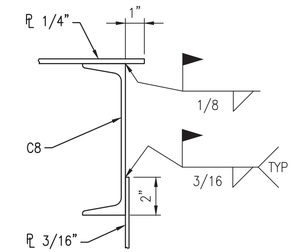

MOVABLE ROOF DETAIL D3

SCALE: 3"=1'-0" S-504

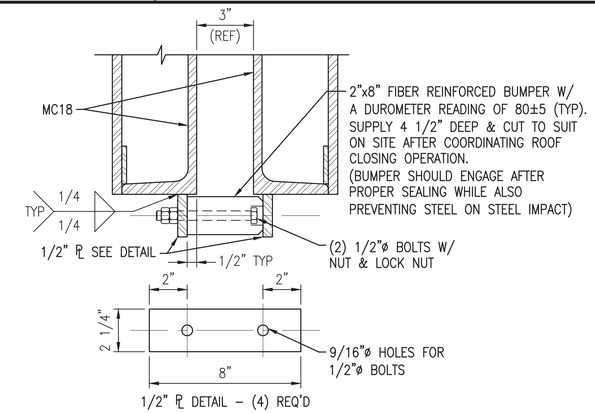

ROOF BUMPER DETAIL D4

SCALE: 3"=1'-0" S-106

NOTES

1. SEE S-001 FOR NOTES.
2. ENSURE THAT EPDM SKIRT IS CREATING SEAL AGAINST APPLICABLE METAL PROTRUSION ALONG MOVABLE ROOF PERIMETER. NO DAYLIGHT SHALL BE SEEN AT ANY LOCATION ALONG PERIMETER OF ROOF IN CLOSED POSITION.
3. REFERENCED DIMENSION IS BASED ON DEMAG WHEEL BLOCK, DESIGNATION DRS160A47KH. NOTE THAT IF ACTUAL WHEEL BLOCK USED DIFFERS THIS DIMENSION MAY NEED TO BE ADJUSTED.

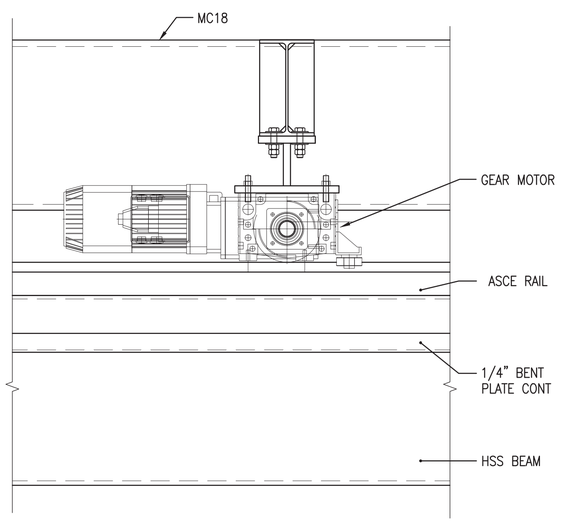

ELEVATION @ ROOF MOTOR B1

SCALE: 1 1/2"=1'-0" S-504

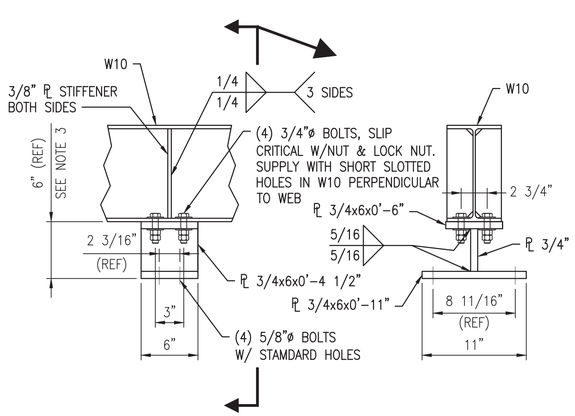

MOVABLE ROOF MOTOR SUPPORT DETAIL A1

SCALE: 1 1/2"=1'-0" S-504

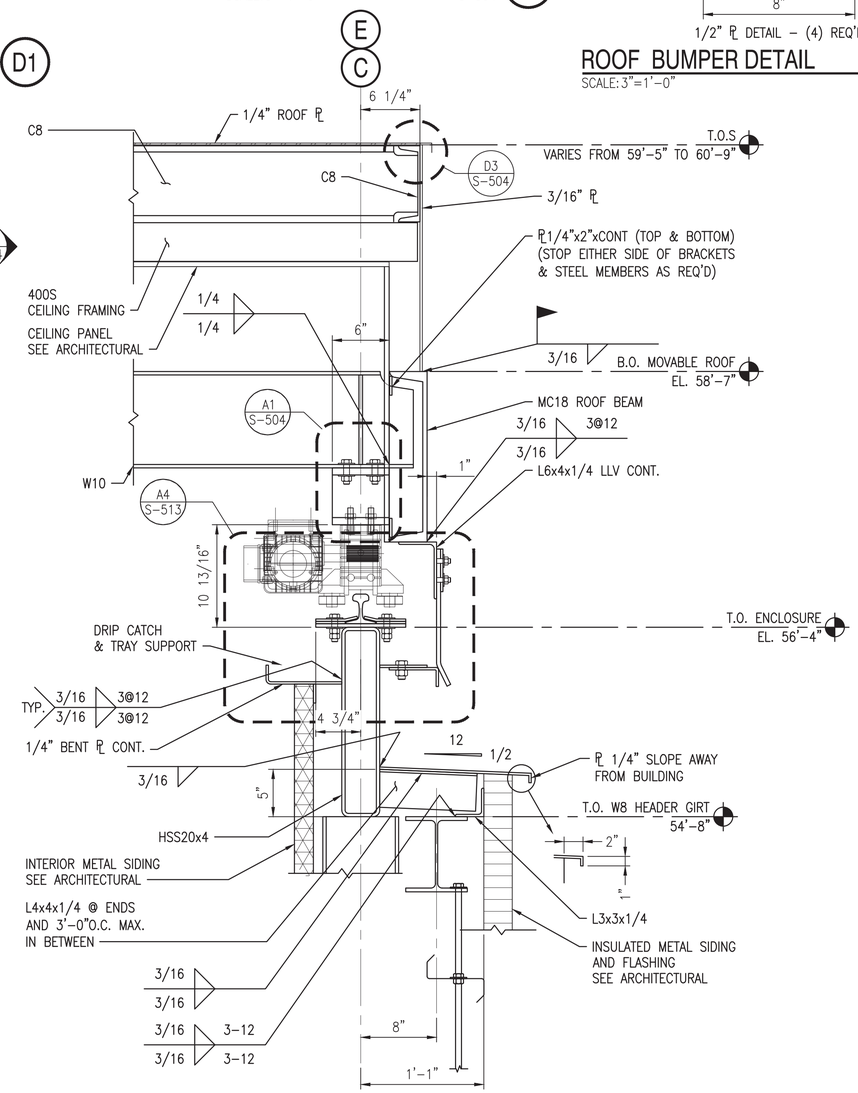

SECTION @ MOVABLE ROOF - SIDE WALL B3

SCALE: 1 1/2"=1'-0" S-105, S-106, S-107, S-213, S-213A, S-214, S-503, S-513

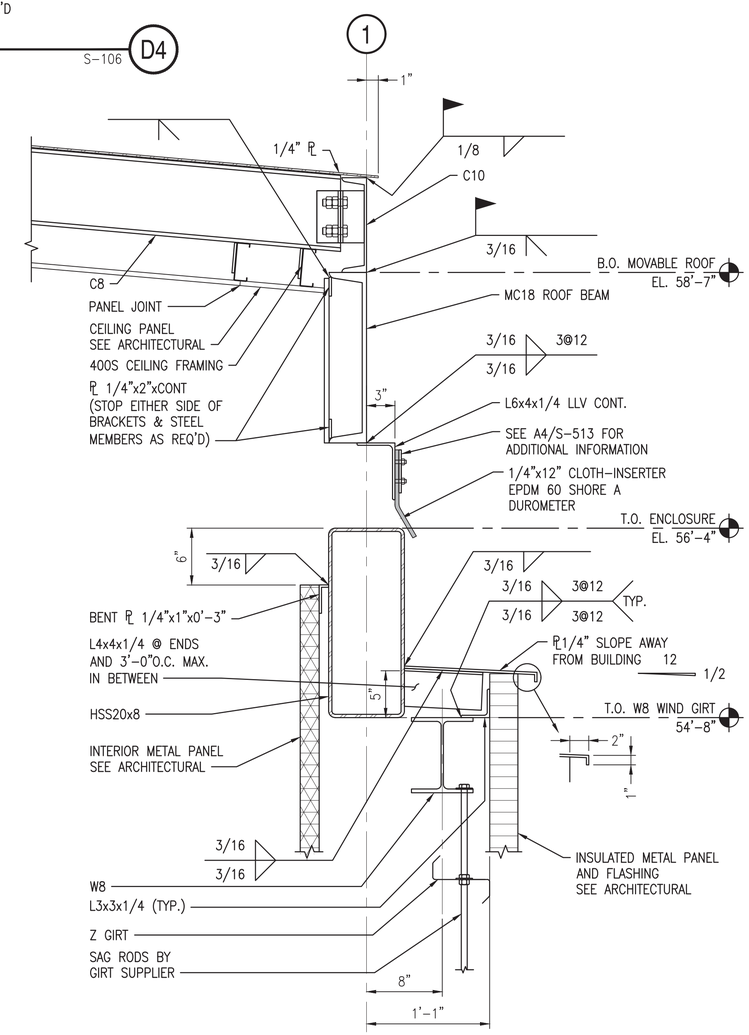

SECTION @ MOVABLE ROOF - REAR WALL B4

SCALE: 1 1/2"=1'-0" S-105, S-106, S-107, S-211, S-211A, S-212, S-212A, S-213, S-213A, S-214, S-505, S-513

Scale: 1" = 1'-0" Scale: 3" = 1'-0" Scale: 1 1/2" = 1'-0"

SYM	DESCRIPTION	DATE	APPR
0	ISSUED FOR CONSTRUCTION	10/28/2016	CBC

NAVFAC

STATE OF MAINE — BRIAN J. BEAULIEU No. 12004 — LICENSED PROFESSIONAL ENGINEER — 10/28/16 — SEAL

Colby Company engineering — A/E INFO

APPROVED (AS CONVENED) — FOR COMMANDER NAVFAC

ACTIVITY: TIM FISHER, C. 2370.6 BRANCH HEAD

SATISFACTORY TO — DATE 10/28/2016

DES DS	DRW BCH	CHK CBC	
PMDM	PETER STOCKLESS		
BRANCH MANAGER	IAN BODWELL		
FEA/PM&E	AMIN BAHROUR		
FIRE PROTECTION	PATRICK BAKAJ		

DEPARTMENT OF THE NAVY — NAVAL FACILITIES ENGINEERING COMMAND — PUBLIC WORKS DEPARTMENT - MAINE

NAVAL FACILITIES ENGINEERING COMMAND ~ MID-ATLANTIC — NAVAL SHIPYARD - PORTSMOUTH, NH

PORTSMOUTH NAVAL SHIPYARD — KITTERY, ME

DRY DOCK #1 DEFUELING COMPLEX DRE-7

MOVABLE ROOF DETAILS

EPROJECT NO.: 1363311

CONSTR. CONTR. NO. N40085-17-C-5002

NAVFAC DRAWING NO. 12735015

SHEET 44 OF 117

S-504 | DD1-16-1096

DRAWFORM REVISION: 10 OCTOBER 2014

10/28/2016 6:59:37 AM X:\297 PORTSMOUTH NAVAL SHIPYARD\297.005.001 - DD#1 DEFUELING COMPLEX DESIGN\DRAWINGS\DRE7\SHEETS\S-504.DWG

NOTES

1. SEE S-001 FOR NOTES.

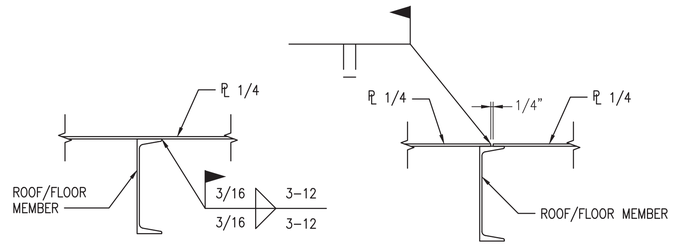

NOTES:
1. USE THESE DETAILS UNLESS OTHERWISE NOTED
2. THE CONTRACTOR MAY DECIDE WHETHER TO USE ONE OR A COMBINATION OF THESE DETAILS WHEN ATTACHING ROOF PLATE TO FRAMING STEEL.
3. SEAL WELDS ARE REQUIRED AT ROOFS, AS WELL AS IN CERTAIN AREAS FOR ENVIRONMENTAL CONTROLS – SEE NOTES ON FRAMING PLANS

TYP ROOF PLATE TO FRAMING ATTACHMENT (C1)

SCALE: 1 1/2"=1'-0"

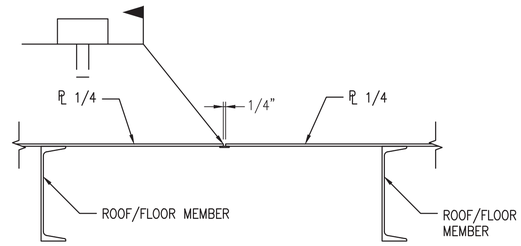

NOTE:
1. USE WHEN SEAM JOINT CAN NOT FALL OVER FRAMING MEMBER.

TYP ROOF PLATE SEAM JOINT (C3)

SCALE: 1 1/2"=1'-0"

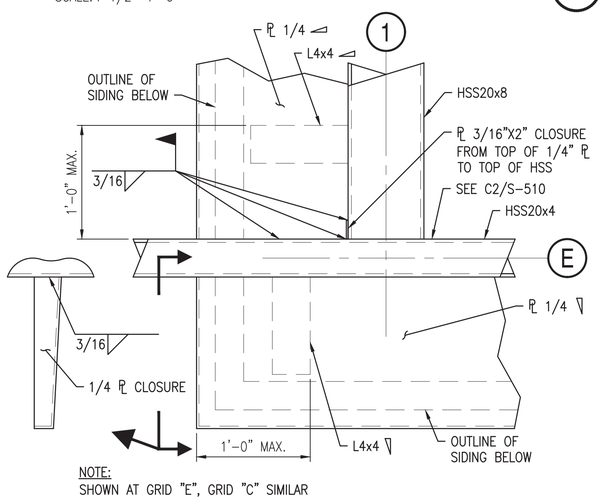

NOTE:
SHOWN AT GRID "E", GRID "C" SIMILAR

MOVABLE ROOF DETAIL (B1)

SCALE: 1 1/2" = 1'-0" S-203, S-203A, S-204

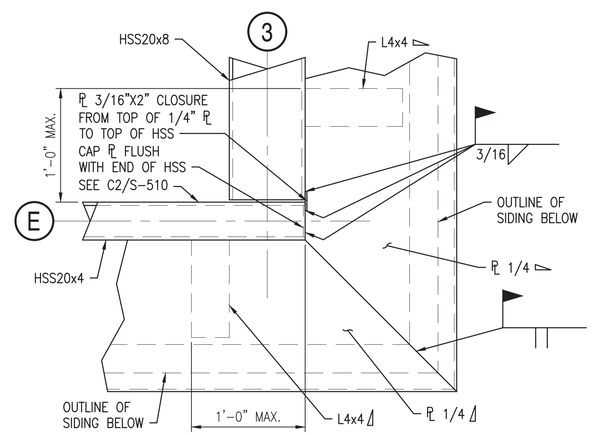

NOTE:
SHOWN AT GRID "E", GRID "C" SIMILAR

MOVABLE ROOF DETAIL (B2)

SCALE: 1 1/2" = 1'-0" S-203, S-203A, S-204

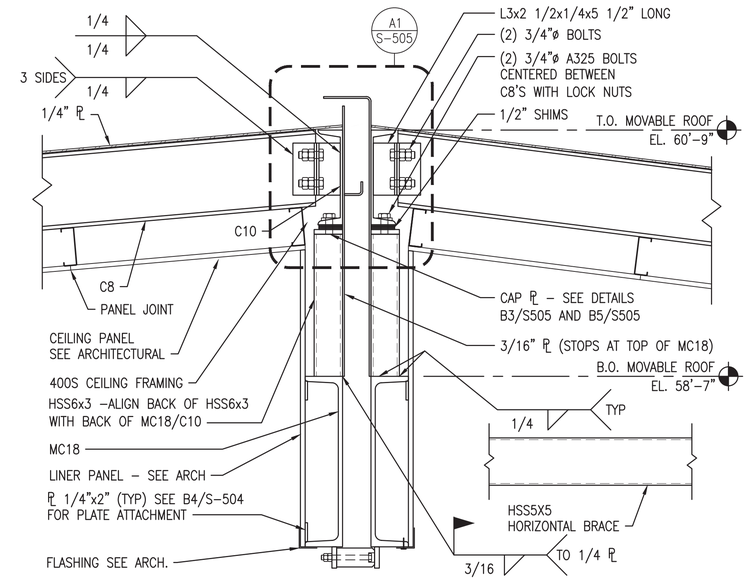

SECTION AT ROOF (C5)

SCALE: 1 1/2"=1'-0" S-107

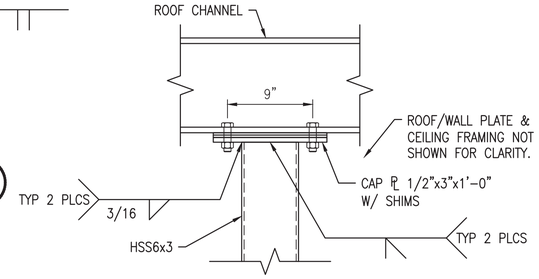

CAP PLATE AT INTERIOR SUPPORTS (B3)

SCALE: 1 1/2"=1'-0" S-107

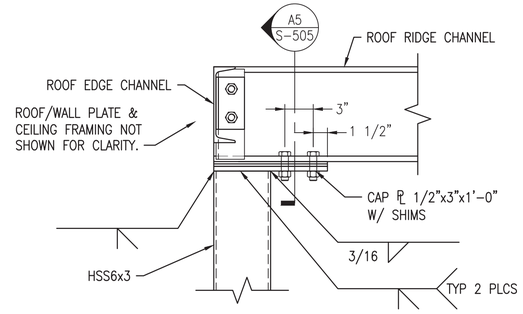

CAP PLATE AT END SUPPORTS (B5)

SCALE: 1 1/2"=1'-0" S-107

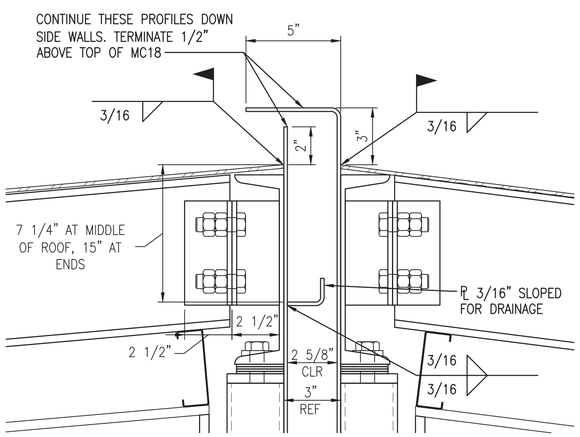

MOVABLE ROOF RIDGE DETAIL (A1)

SCALE: 3"=1'-0" S-505

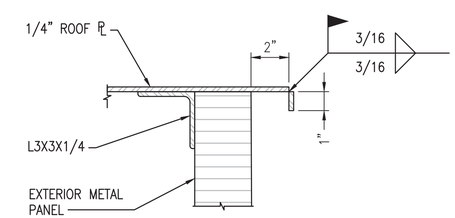

TYPICAL ROOF PLATE LIP DETAIL (U.N.O.) (A4)

SCALE: 3"=1'-0"

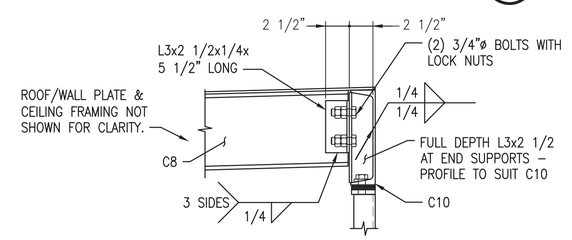

TYPICAL END SUPPORT FRAMING DETAIL (A5)

SCALE: 1 1/2"=1'-0" S-505

0 1/2' 1' 1 1/2'
Scale: 1 1/2" = 1'-0"

0 3" 6" 9"
Scale: 3" = 1'-0"

SYM	DESCRIPTION	DATE	APPR
0	ISSUED FOR CONSTRUCTION	10/28/2016	CBC

NAVFAC

STATE OF MAINE — BRIAN J. BEAULIEU No. 12004 — LICENSED PROFESSIONAL ENGINEER — 10/28/16 — SEAL

Colby Company engineering — A/E INFO

APPROVED (Signature) — FOR COMMANDER NAVFAC

ACTIVITY: TIM FISHER, C. 2370.6 BRANCH HEAD

SATISFACTORY TO — DATE 10/28/2016

DES DS | DRW BCH | CHK CBC

PMDM: PETER STOCKLESS

BRANCH MANAGER: IAN BODWELL

FEAD/PM&E: AMIN BAHROUR

FIRE PROTECTION: PATRICK BAKAJ

DEPARTMENT OF THE NAVY — NAVAL FACILITIES ENGINEERING COMMAND — PUBLIC WORKS DEPARTMENT, MAINE

NAVAL FACILITIES ENGINEERING COMMAND ~ MID-ATLANTIC — NAVAL SHIPYARD, PORTSMOUTH, NH

PORTSMOUTH NAVAL SHIPYARD — KITTERY, ME

DRY DOCK #1 DEFUELING COMPLEX — DRE-7

MOVABLE ROOF DETAILS

EPROJECT NO.: 1363311

CONSTR. CONTR. NO.: N40085-17-C-5002

NAVFAC DRAWING NO.: 12735016

SHEET 45 OF 117

S-505 | DD1-16-1097

DRAWFORM REVISION: 10 OCTOBER 2014

10/28/2016 7:00:03 AM X:\297 PORTSMOUTH NAVAL SHIPYARD\297.005.001 - DD#1 DEFUELING COMPLEX DESIGN\DRAWINGS\DRE7\SHEET\S\S-505.DWG

NOTES

1. SEE S-001 FOR NOTES.
2. FOR ADDITION GIRT DETAILS SEE DRAWING S-515.

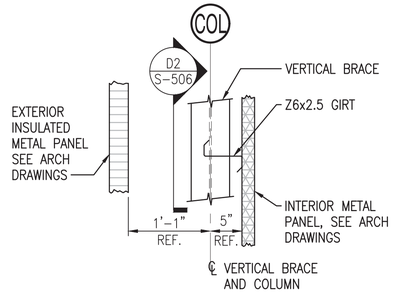

SECTION AT INTERUPTED GIRT (D1)
SCALE: 1"=1'-0" S-211, S-211A, S-212, S-212A, S-213, S-213A, S214

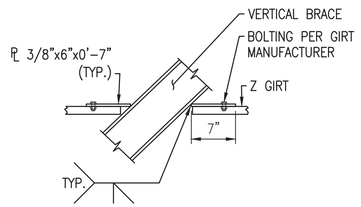

TYP. GIRT ATTACHMENT TO VERTICAL BRACE DETAIL (D2)
SCALE: 1"=1'-0"

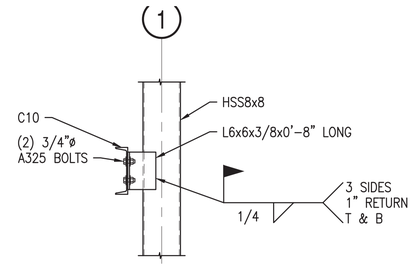

SECTION AT GIRT CONNECTION (D3)
SCALE: 3/4"=1'-0" S-401, S-401A

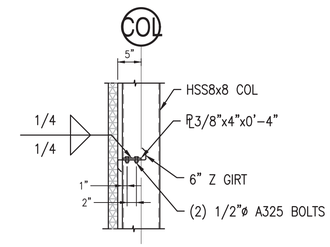

SECTION AT GIRT CONNECTION (D4)
SCALE: 3/4"=1'-0" S-211, S-211A, S-212, S-212A, S-213, S-213A, S214

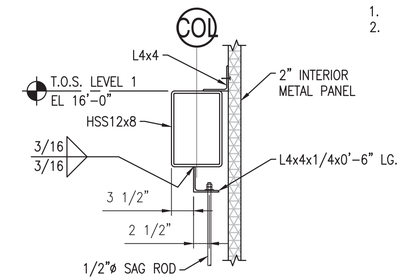

SECTION (D5)
SCALE: 1"=1'-0" S-211A

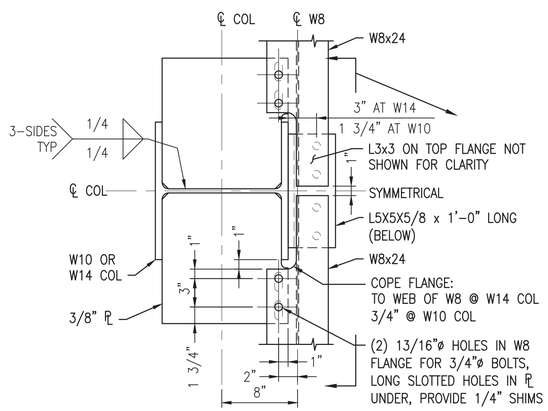

TYP. W-COL TO HEADER GIRT (C1)
SCALE: 1 1/2"=1'-0" S-510, S-515

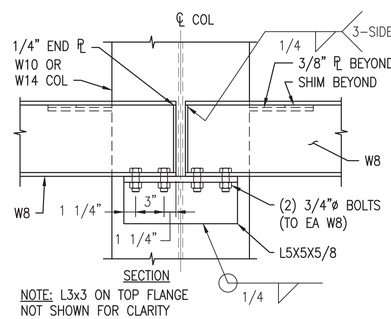

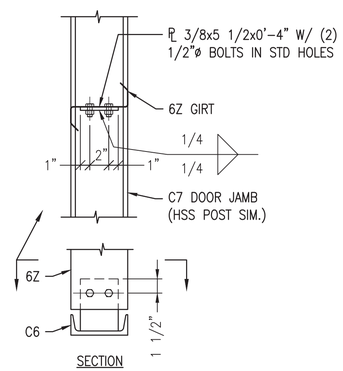

Z-GIRT AT DOOR JAMB/HSS POST (C3)
SCALE: 1 1/2"=1'-0" S-205A, S-511

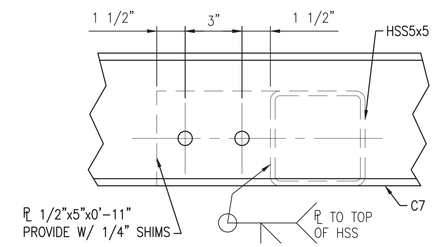

SECTION - POST CAP PLATE (C5)
SCALE: 3"=1'-0" S-203

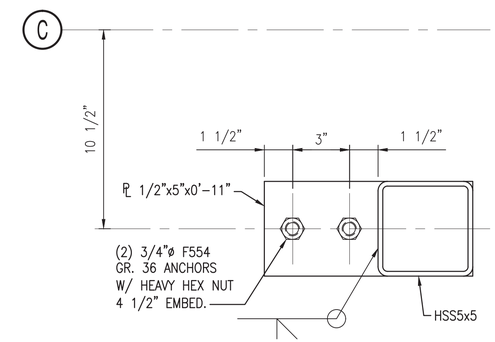

SECTION - POST BASE PLATE (B5)
SCALE: 3"=1'-0" S-203

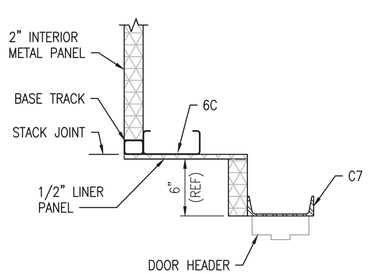

GIRT AT DOOR HEADER (A1)
SCALE: 1 1/2"=1'-0" S-214

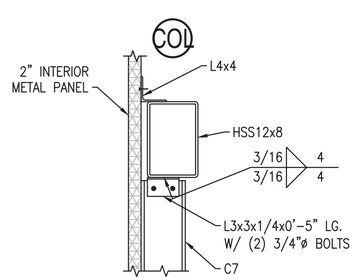

SECTION (A2)
SCALE: 1"=1'-0" S-212, S-212A

0 3" 6" 9" Scale: 3" = 1'-0"
0 1/2' 1' 1 1/2' Scale: 1 1/2" = 1'-0"
0 1/2' 1' 2' Scale: 1" = 1'-0"

SYM	DESCRIPTION	DATE	APPR
0	ISSUED FOR CONSTRUCTION	10/28/2016	CBC

NAVFAC

STATE OF MAINE — BRIAN J. BEAULIEU No. 12004 — LICENSED PROFESSIONAL ENGINEER — 10/28/16 — SEAL

Colby Company engineering — A/E INFO

APPROVED BY COMMAND — Daniel W. Greenfield — FOR COMMANDER NAVFAC

ACTIVITY: TIM FISHER, C. 2370.6 BRANCH HEAD

SATISFACTORY TO DATE 10/28/2016

DES	DS	DRW BCH	CHK CBC
PMDM	PETER STOCKLESS		
BRANCH MANAGER	IAN BODWELL		
FEA/DP/M&E	AMIN BAHROUR		
FIRE PROTECTION	PATRICK BAKAJ		

DEPARTMENT OF THE NAVY
NAVAL FACILITIES ENGINEERING COMMAND
PUBLIC WORKS DEPARTMENT - MAINE
NAVAL FACILITIES ENGINEERING COMMAND ~ MID-ATLANTIC
NAVAL SHIPYARD - PORTSMOUTH, NH
PORTSMOUTH NAVAL SHIPYARD
KITTERY, ME
DRY DOCK #1 DEFUELING COMPLEX
DRE-7
GIRT CONNECTION DETAILS

EPROJECT NO.: 1363311
CONSTR. CONTR. NO. N40085-17-C-5002
NAVFAC DRAWING NO. 12735017
SHEET 46 OF 117
S-506 DD1-16-1098

DRAWFORM REVISION: 10 OCTOBER 2014

10/28/2016 7:00:33 AM X:\297 PORTSMOUTH NAVAL SHIPYARD\297.005.001 - DD#1 DEFUELING COMPLEX DESIGN\DRAWINGS\DRE7\SHEETS\S-506.DWG

NOTES

1. SEE S-001 FOR NOTES.

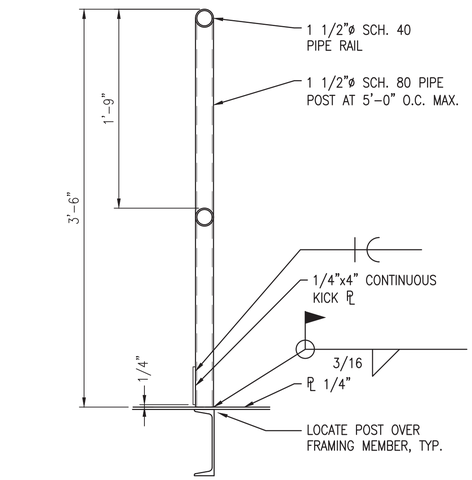

TYP GUARDRAIL TO PLATE CONNECTION (C1)
SCALE: 1 1/2"=1'-0"

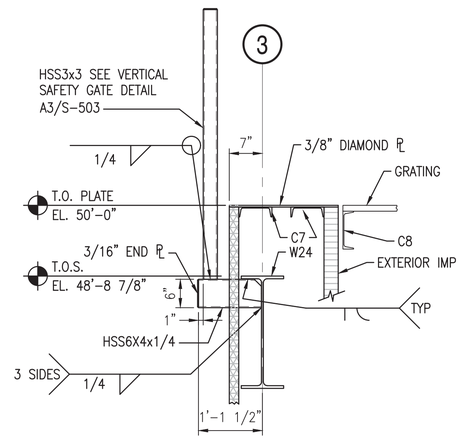

SECTION AT VERTICAL SAFETY GATE (C2)
SCALE: 3/4"=1'-0" S-104

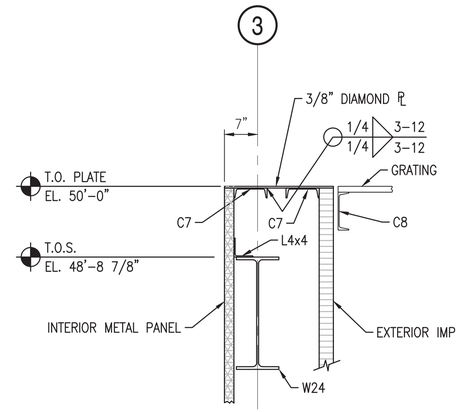

SECTION AT VERTICAL SAFETY GATE (C3)
SCALE: 3/4"=1'-0" S-104

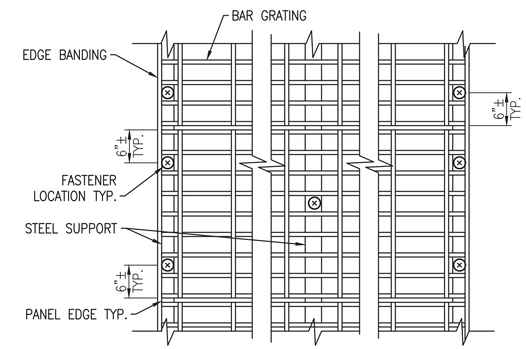

TYPICAL FASTENER LOCATION PLAN (C4)
SCALE: N.T.S.

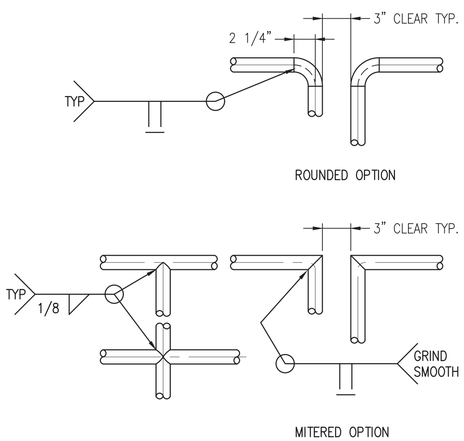

TYP. GUARDRAIL JOINTS (B1)
SCALE: 1 1/2"=1'-0"

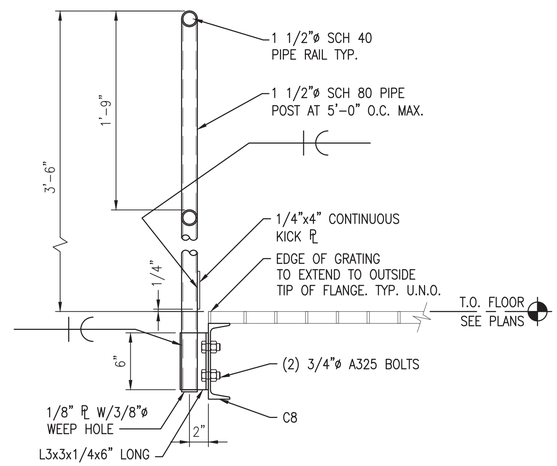

TYP. PERMANENT GUARDRAIL AT EXTERIOR PLATFORM (B2)
SCALE: 1 1/2"=1'-0"

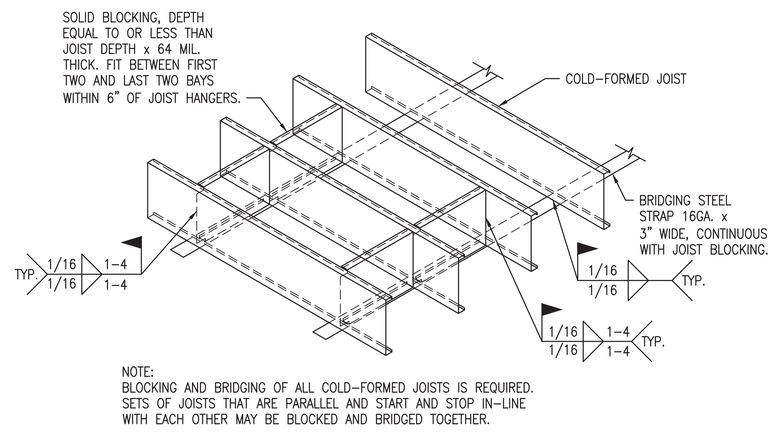

TYPICAL COLD-FORMED JOIST BLOCKING AND BRIDGING (A4)
SCALE: 3/4"=1'-0"

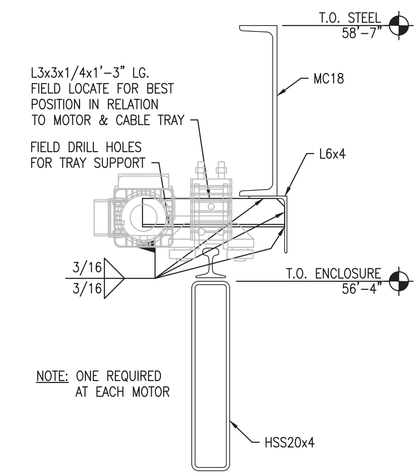

MOTOR TRAY SUPPORT BRACKET DETAIL (B5)
SCALE: 1 1/2"=1'-0" S-106

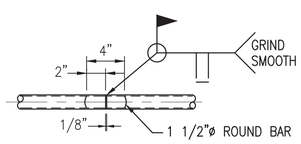

TYP. GUARDRAIL FIELD SPLICE (A1)
SCALE: 1 1/2"=1'-0"

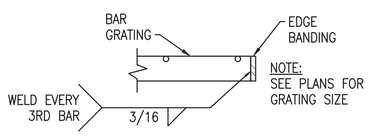

TYP. GRATING FINISHED EDGE DETAIL (A2)
SCALE: N.T.S.

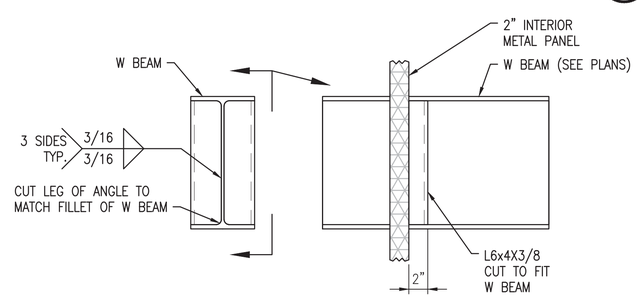

TYPICAL W BEAM SIDING PENETRATION DETAIL (A3)
SCALE: 1"=1'-0" S-509, S-511

0 1/2' 1' 1 1/2'
Scale: 1 1/2" = 1'-0"
0 1/2' 1' 2'
Scale: 1" = 1'-0"

SYM	DESCRIPTION	DATE	APPR
0	ISSUED FOR CONSTRUCTION	10/28/2016	CBC

NAVFAC

STATE OF MAINE
BRIAN J. BEAULIEU
No. 12004
LICENSED PROFESSIONAL ENGINEER
10/28/16
SEAL

Colby Company engineering
A/E INFO

APPROVED
Daniel W. Greenfield
FOR COMMANDER NAVFAC

ACTIVITY	TIM FISHER C. 2370.6 BRANCH HEAD
SATISFACTORY TO DATE	10/28/2016
DES DS	DRW BCH CHK CBC
PMDM	PETER STOCKLESS
BRANCH MANAGER	IAN BODWELL
FEA/PM&E	AMIN BAHROUR
FIRE PROTECTION	PATRICK BAKAJ

DEPARTMENT OF THE NAVY
NAVAL FACILITIES ENGINEERING COMMAND
PUBLIC WORKS DEPARTMENT - MAINE

NAVAL FACILITIES ENGINEERING COMMAND ~ MID-ATLANTIC
NAVAL SHIPYARD - PORTSMOUTH, NH

PORTSMOUTH NAVAL SHIPYARD
KITTERY, ME

DRY DOCK #1 DEFUELING COMPLEX
DRE-7

TYPICAL DETAILS

EPROJECT NO.: 1363311
CONSTR. CONTR. NO. N40085-17-C-5002
NAVFAC DRAWING NO. 12735018
SHEET 47 OF 117
S-507 DD1-16-1099

DRAWFORM REVISION: 10 OCTOBER 2014

10/28/2016 7:00:59 AM X:\297 PORTSMOUTH NAVAL SHIPYARD\297.005.001 - DD#1 DEFUELING COMPLEX DESIGN\DRAWINGS\DRE7\SHEETS\S-507.DWG

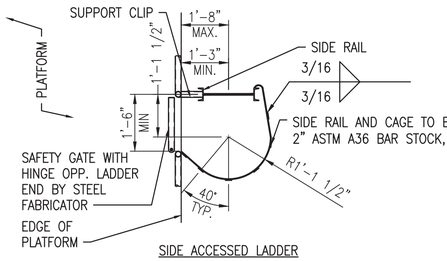

SIDE ACCESSED LADDER

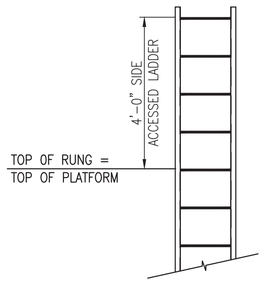

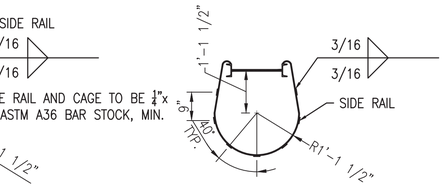

DETAIL AT INTERMEDIATE HOOP PASS THROUGH LADDER

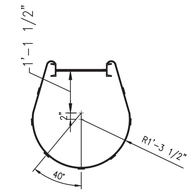

DETAIL AT BOTTOM HOOP

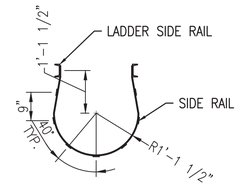

DETAIL AT TOP HOOP

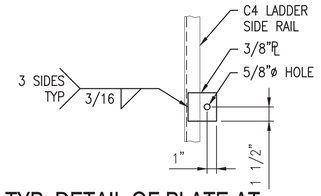

TYP. DETAIL OF PLATE AT SECURITY GATE (D4)

SCALE: 1 1/2"=1'-0" S-508

NOTES

1. SEE S-001 FOR NOTES.

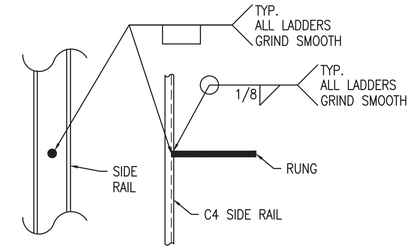

TYP. RUNG WELDING DETAIL (D5)

SCALE: 1/2"=1'-0" S-508

SIDE EXIT LADDER

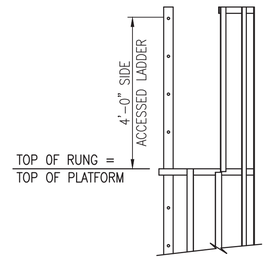

PASS THROUGH LADDER

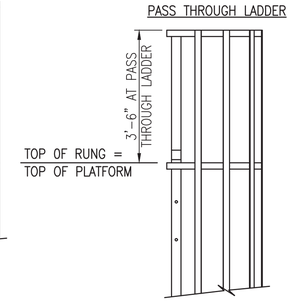

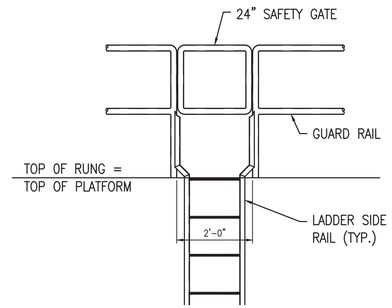

TYP. SAFETY GATE AT TOP OF LADDER (C4)

SCALE: 1/2"=1'-0"

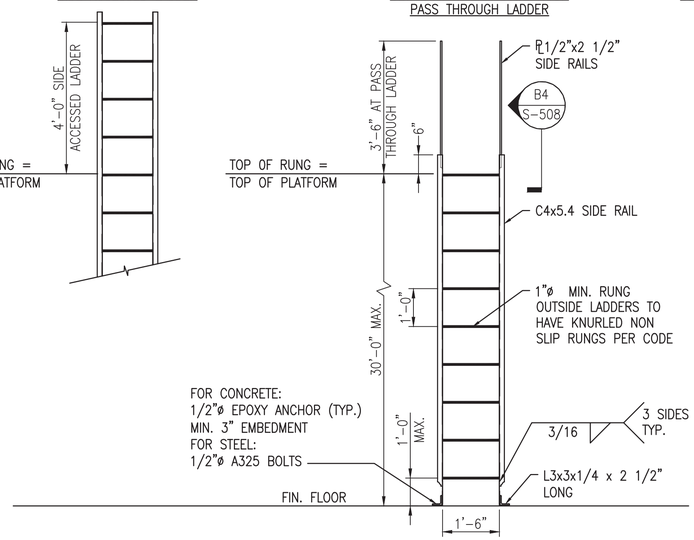

FOR GRATING

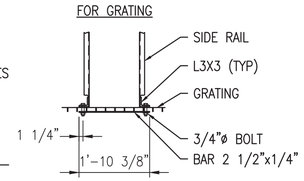

TYPICAL LADDER ATTACHMENT AT UPPER LEVEL (C1)

SCALE: 1/2"=1'-0"

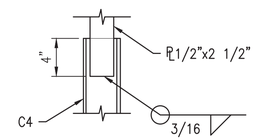

TYP. LADDER SIDE RAIL EXTENSION DETAIL (B4)

SCALE: 1 1/2"=1'-0" S-508

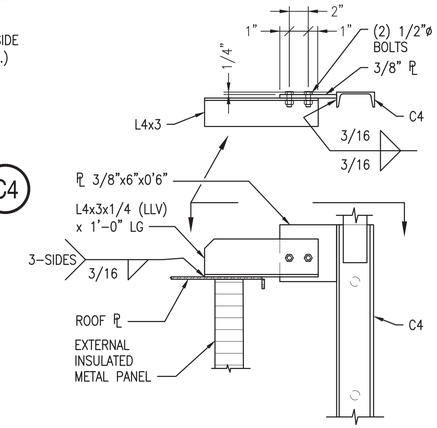

TYP. LADDER ATTACHMENT AT ROOF PLATE DETAIL (B5)

SCALE: 1 1/2"=1'-0" S-508

LADDER NOTES

1. LADDERS SHALL BE FABRICATED TO 29 CFR CH. XVII, PART 1910 – OCCUPATIONAL SAFETY AND HEALTH STANDARDS 1910.27, FIXED LADDERS.
2. OUTSIDE LADDERS TO HAVE KNURLED NON SLIP RUNGS PER CODE, (1" MIN. DIAMETER).
3. CARBON STEEL LADDERS SHALL BE PAINTED.
4. ALL LADDERS GREATER THAN 20'-0" SHALL HAVE CAGES.
5. CAGED LADDER CLOSEST TO GROUND SHALL CONTAIN A SECURITY CAGE ENTRY GATE OPTION. SEE DETAIL A3 THIS DRAWING.

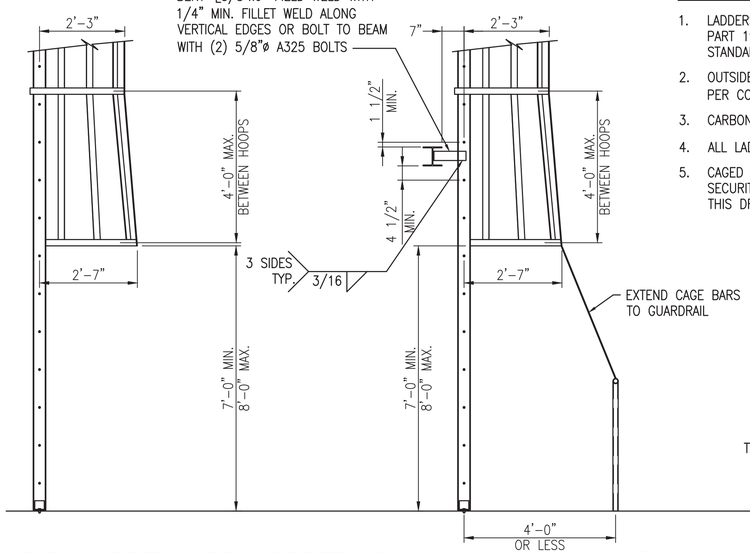

TYPICAL BOTTOM OF CAGE DETAILS (A1)

SCALE: 1/2"=1'-0"

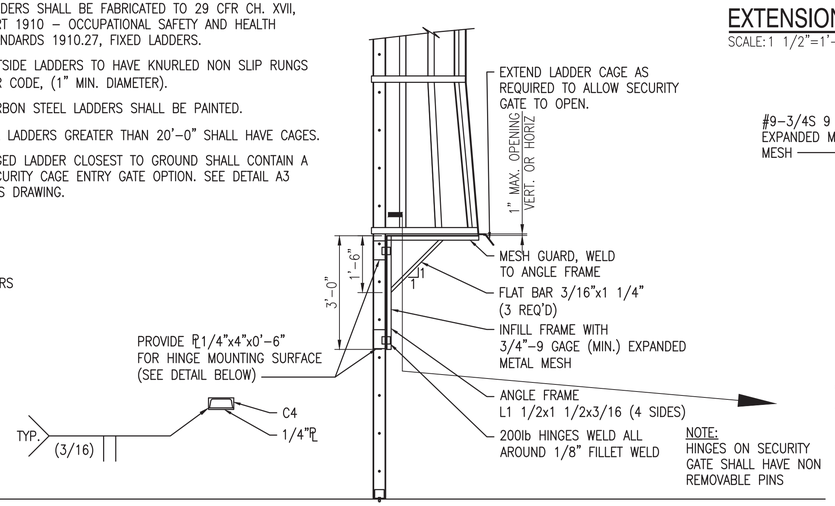

NOTE:
HINGES ON SECURITY GATE SHALL HAVE NON REMOVABLE PINS

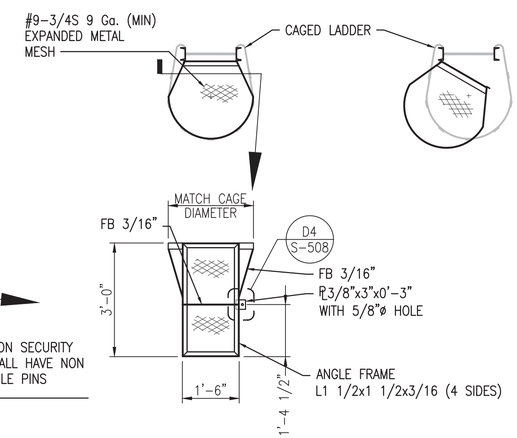

TYPICAL SECURITY GATE DETAIL (A3)

SCALE: 1/2"=1'-0"

SYM	DESCRIPTION	DATE	APPR
0	ISSUED FOR CONSTRUCTION	10/28/2016	CBC

NAVFAC

STATE OF MAINE — BRIAN J. BEAULIEU No. 12004 — LICENSED PROFESSIONAL ENGINEER — 10/28/16 — SEAL

Colby Company engineering — A/E INFO

APPROVED (CONTRACTING OFFICER) — FOR COMMANDER NAVFAC

ACTIVITY: TIM FISHER, C. 2370.6 BRANCH HEAD

SATISFACTORY TO DATE 10/28/2016

DES DS | DRW BCH | CHK CBC

PMDM: PETER STOCKLESS

BRANCH MANAGER: IAN BODWELL

FEAD/PMAE: AMIN BAHROUR

FIRE PROTECTION: PATRICK BAKAJ

DEPARTMENT OF THE NAVY — NAVAL FACILITIES ENGINEERING COMMAND — PUBLIC WORKS DEPARTMENT - MAINE

NAVAL FACILITIES ENGINEERING COMMAND ~ MID-ATLANTIC — NAVAL SHIPYARD - PORTSMOUTH, NH

PORTSMOUTH NAVAL SHIPYARD — KITTERY, ME

DRY DOCK #1 DEFUELING COMPLEX DRE-7

LADDER DETAILS

EPROJECT NO.: 1363311

CONSTR. CONTR. NO.: N40085-17-C-5002

NAVFAC DRAWING NO.: 12735019

SHEET 48 OF 117

S-508 | DD1-16-1100

Scale: 1 1/2" = 1'-0" (0, 1/2', 1', 1 1/2')

Scale: 3/4" = 1'-0" (0, 1', 2', 3')

Scale: 1/2" = 1'-0" (0, 1', 2', 4')

DRAWFORM REVISION: 10 OCTOBER 2014

10/28/2016 7:01:22 AM X:\297 PORTSMOUTH NAVAL SHIPYARD\297.005.001 - DD#1 DEFUELING COMPLEX DESIGN\DRAWINGS\DRE7\SHEETS\S-508.DWG

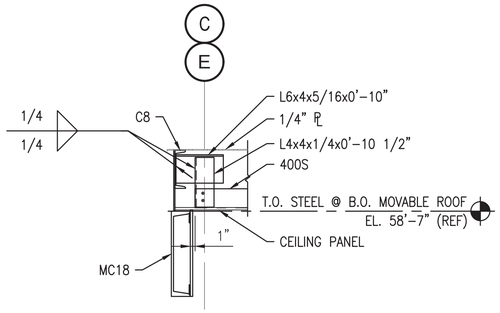

SECTION AT CEILING END (D1)

SCALE: 3/4"=1'-0" S-107, S-513

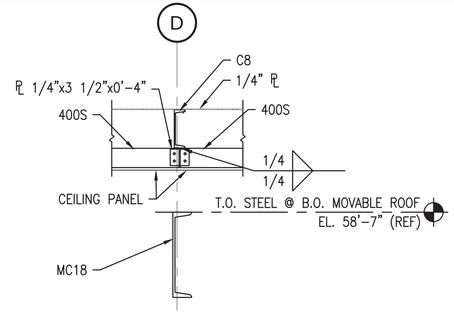

SECTION AT CEILING JOIST JOINT (D2)

SCALE: 3/4"=1'-0" S-107

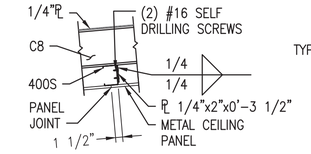

SECTION AT CEILING JOIST ATTACHMENT (D3)

SCALE: 3/4"=1'-0" S-107

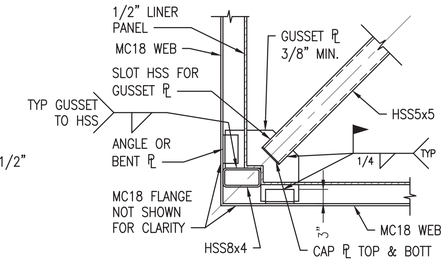

DETAIL INTERSECTION OF HSS AND MC (D4)

SCALE: 3/4"=1'-0" S-106

NOTES

1. SEE S-001 FOR NOTES.

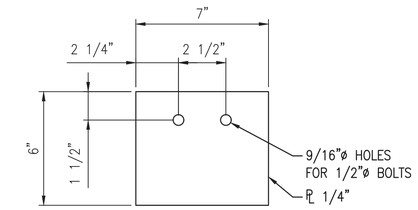

SECTION - TARGET PLATE (D5)

SCALE: 3"=1'-0" S-509

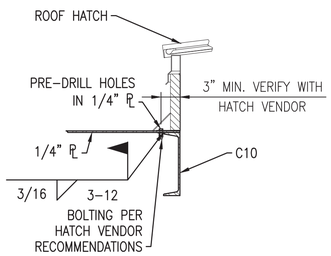

TYP. SECTION AT ROOF HATCH (C1)

SCALE: 1"=1'-0" S-101A

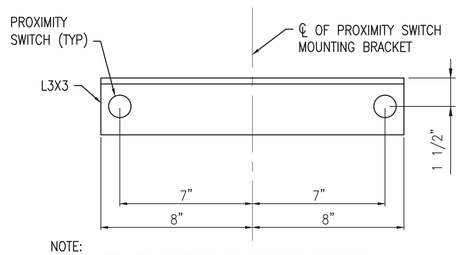

NOTE:
COORDINATE WITH CONTROLS SENSORS REQUIREMENTS FOR MOUNTING BRACKET SIZE AND LOCATION

PROXIMITY SWITCH MOUNTING BRACKET (C2)

SCALE: 3"=1'-0" S-509

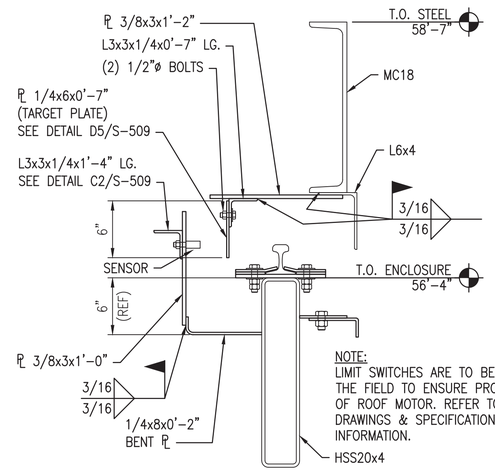

NOTE:
LIMIT SWITCHES ARE TO BE LOCATED IN THE FIELD TO ENSURE PROPER OPERATION OF ROOF MOTOR. REFER TO MECHANICAL DRAWINGS & SPECIFICATIONS FOR MORE INFORMATION.

ROOF LIMIT SWITCH BRACKET (C3)

SCALE: 1 1/2"=1'-0" S-105

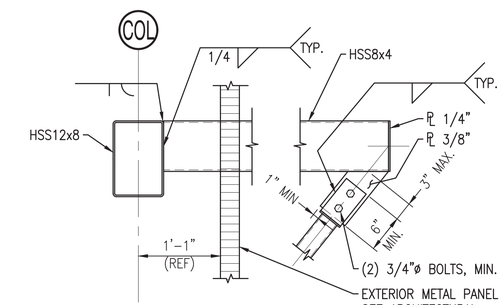

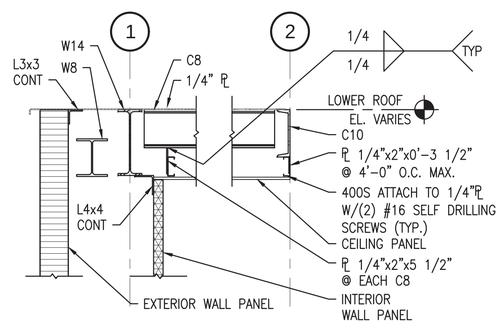

TYP. SECTION THROUGH WALL AT GRID (1) (B1)

SCALE: 3/4"=1'-0" GRID (3) SIMILAR S-101A

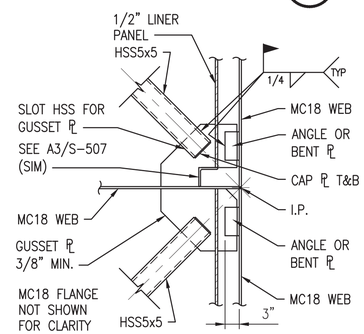

DETAIL INTERSECTION OF HSS AND MC (B2)

SCALE: 3/4"=1'-0" S-106

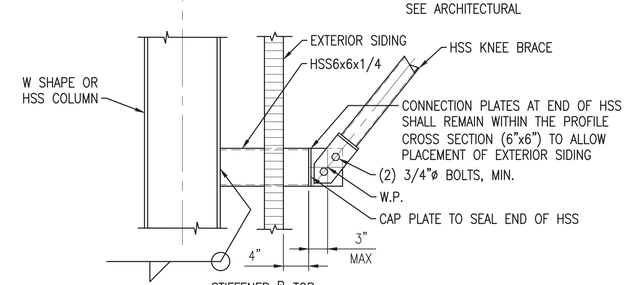

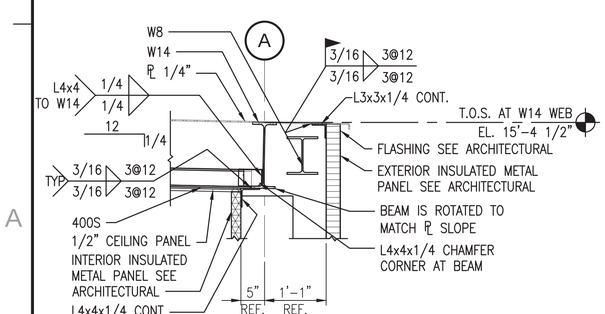

TYP. SECTION THROUGH WALL AT GRID (A) (A1)

SCALE: 3/4"=1'-0" S-101A

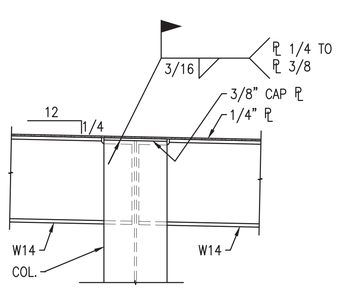

TYP. LOWER ROOF ATTACHMENT AT COLUMN (A2)

SCALE: 1"=1'-0" S-101A

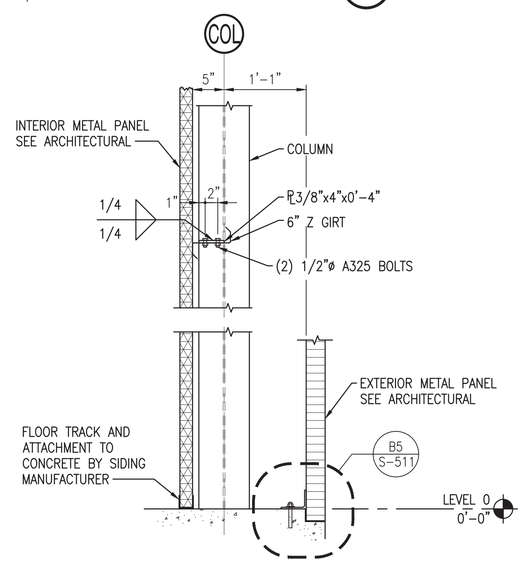

SIDING ATTACHMENT DETAIL (A3)

SCALE: 1"=1'-0" S-201, S-202, S-203, S-204, S-201A, S-202A, S-203A

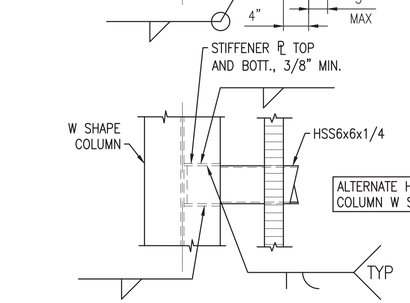

NOTE:
APPROVED ALTERNATIVES TO THE ARRANGEMENT SHOWN ARE ACCEPTABLE PROVIDED THE NOTED CONSTRAINTS ARE SATISFIED

DETAIL AT PLATFORM FRAMING (B5)

SCALE: 1"=1'-0" S-102, S-104

Scale: 3/4" = 1'-0" (0, 1', 2', 3')
Scale: 1" = 1'-0" (0, 1/2', 1', 2')
Scale: 1 1/2" = 1'-0" (0, 1/2', 1', 1 1/2')
Scale: 3" = 1'-0" (0, 3", 6", 9")

SYM	DESCRIPTION	DATE	APPR
0	ISSUED FOR CONSTRUCTION	10/28/2016	CBC

NAVFAC

STATE OF MAINE — BRIAN J. BEAULIEU No. 12004 — LICENSED PROFESSIONAL ENGINEER — 10/28/16 — SEAL

Colby Company engineering — A/E INFO

APPROVED (Signature) — FOR COMMANDER NAVFAC

ACTIVITY: TIM FISHER, C. 2370.6 BRANCH HEAD

SATISFACTORY TO DATE 10/28/2016

DES DS DRW BCH CHK CBC

PMDM: PETER STOCKLESS
BRANCH MANAGER: IAN BODWELL
FEAD/PM&E: AMIN BAHROUR
FIRE PROTECTION: PATRICK BAKAJ

DEPARTMENT OF THE NAVY
NAVAL FACILITIES ENGINEERING COMMAND
PUBLIC WORKS DEPARTMENT - MAINE

NAVAL FACILITIES ENGINEERING COMMAND ~ MID-ATLANTIC
NAVAL SHIPYARD - PORTSMOUTH, NH

PORTSMOUTH NAVAL SHIPYARD
KITTERY, ME

DRY DOCK #1 DEFUELING COMPLEX DRE-7

STRUCTURAL SECTIONS AND DETAILS

EPROJECT NO.: 1363311

CONSTR. CONTR. NO. N40085-17-C-5002

NAVFAC DRAWING NO. 12735020

SHEET 49 OF 117

S-509 | DD1-16-1101

DRAWFORM REVISION: 10 OCTOBER 2014

10/28/2016 7:01:51 AM X:\297 PORTSMOUTH NAVAL SHIPYARD\297.005.001 - DD#1 DEFUELING COMPLEX DESIGN\DRAWINGS\DRE7\SHEETS\S-509.DWG

NOTES

1. SEE S-001 FOR NOTES.

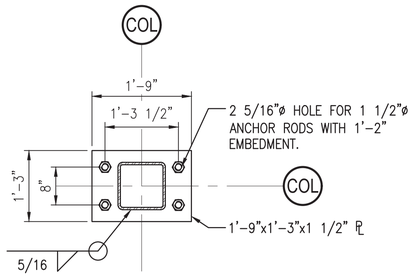

BASEPLATE DETAIL BP-3 (C1)
SCALE: 3/4" = 1'-0" S-600A

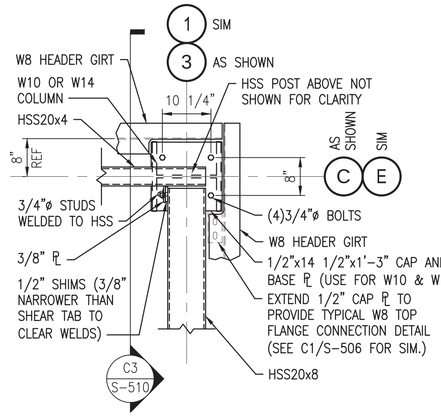

FRAMING DETAIL AT TOP OF ENCLOSURE (C2)
SCALE: 3/4" = 1'-0" S-105, S-505

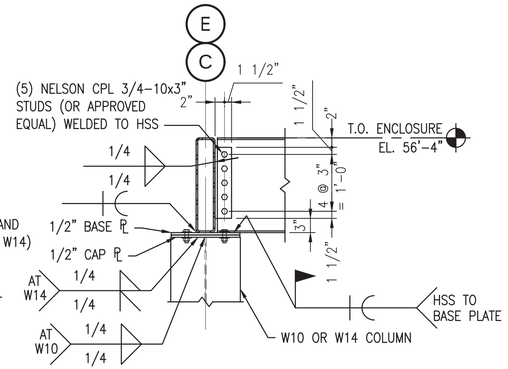

FRAMING DETAIL AT TOP OF ENCLOSURE (C3)
SCALE: 3/4" = 1'-0" S-510

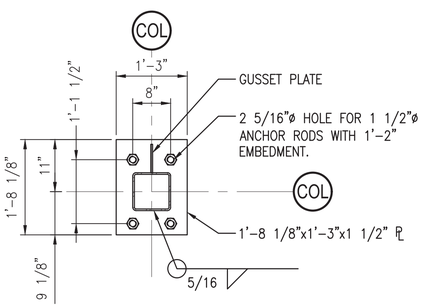

BASEPLATE DETAIL BP-2 (B1)
SCALE: 3/4" = 1'-0" S-600, S-600A

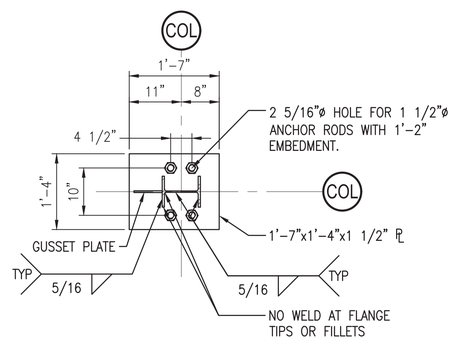

BASEPLATE DETAIL BP-5 (B2)
SCALE: 3/4" = 1'-0" S-600A

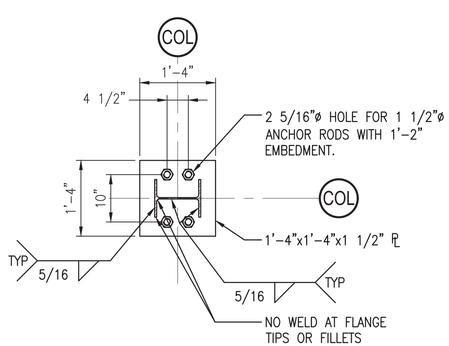

BASEPLATE DETAIL BP-1 (A1)
SCALE: 3/4" = 1'-0" S-600, S-600A

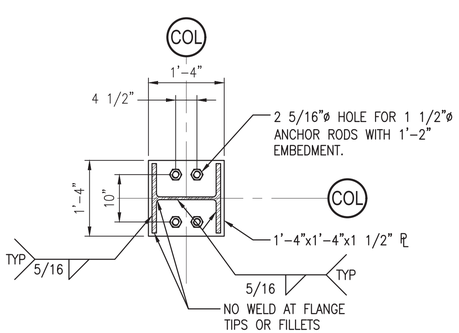

BASEPLATE DETAIL BP-4 (A2)
SCALE: 3/4" = 1'-0" S-600A

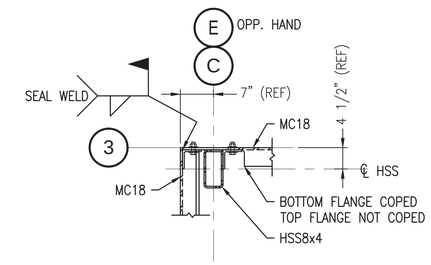

FRAMING DETAIL AT FIXED ROOF (B4)
SCALE: 3/4" = 1'-0" S-510

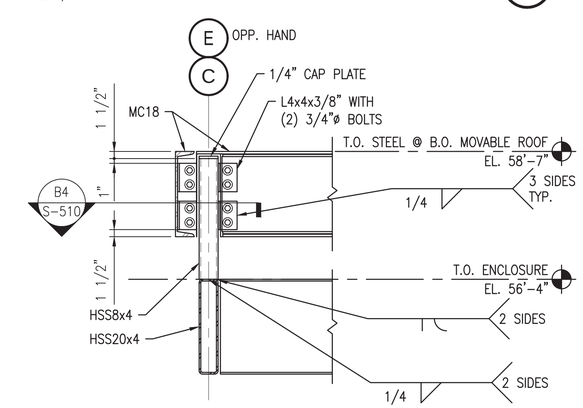

FRAMING DETAIL AT FIXED ROOF (A4)
SCALE: 3/4" = 1'-0" S-105, S-106

0 1/2' 1' 1 1/2'
Scale: 1 1/2" = 1'-0"

0 1' 2' 3'
Scale: 3/4" = 1'-0"

SYM	DESCRIPTION	DATE	APPR
0	ISSUED FOR CONSTRUCTION	10/28/2016	CBC

NAVFAC

STATE OF MAINE — BRIAN J. BEAULIEU No. 12004 — LICENSED PROFESSIONAL ENGINEER — 10/28/16 — SEAL

Colby Company engineering — A/E INFO

APPROVED (E-Signature) — FOR COMMANDER NAVFAC

ACTIVITY: TIM FISHER, C. 2370.6 BRANCH HEAD

SATISFACTORY TO DATE 10/28/2016

DES	DS	DRW BCH	CHK CBC
PM/CM	PETER STOCKLESS		
BRANCH MANAGER	IAN BODWELL		
FEAD/PM&E	AMIN BAHROUR		
FIRE PROTECTION	PATRICK BAKAJ		

DEPARTMENT OF THE NAVY — NAVAL FACILITIES ENGINEERING COMMAND — PUBLIC WORKS DEPARTMENT - MAINE

NAVAL FACILITIES ENGINEERING COMMAND ~ MID-ATLANTIC — NAVAL SHIPYARD - PORTSMOUTH, NH

PORTSMOUTH NAVAL SHIPYARD — KITTERY, ME

DRY DOCK #1 DEFUELING COMPLEX DRE-7

STRUCTURAL SECTIONS AND DETAILS

EPROJECT NO.: 1363311

CONSTR. CONTR. NO.: N40085-17-C-5002

NAVFAC DRAWING NO.: 12735021

SHEET 50 OF 117

S-510 | DD1-16-1102

DRAWFORM REVISION: 10 OCTOBER 2014

10/28/2016 7:02:12 AM X:\297 PORTSMOUTH NAVAL SHIPYARD\297.005.001 - DD#1 DEFUELING COMPLEX DESIGN\DRAWINGS\DRE7\SHEETS\S-510.DWG

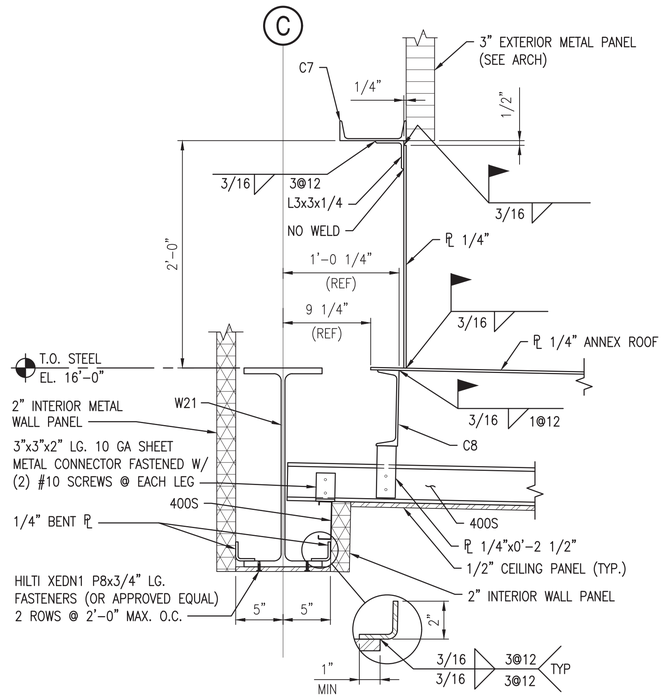

TYP. SECTION AT CEILING END / LOWER ROOF (C1)

SCALE: 1 1/2"=1'-0" S-101A, S-203A

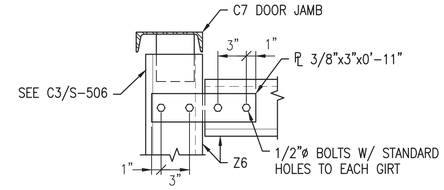

GIRT CONNECTION DETAIL (D3)

SCALE: 1 1/2"=1'-0" S-205, S-205A

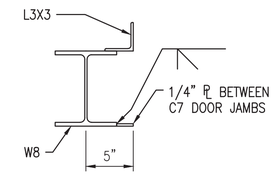

SECTION AT W8 DOOR HEADER (D4)

SCALE: 1 1/2"=1'-0" S-202, S-202A

NOTES

1. SEE S-001 FOR NOTES.
2. SHIMS ARE TO ALLOW FOR FIELD ADJUSTMENT OF HEADER GIRT AT OVERHEAD DOOR, AS DOOR JAMBS WILL BE CUT TO FIT SNUG TO UNDERSIDE.

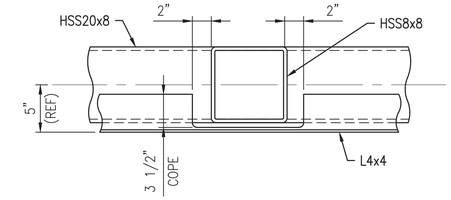

TYP. COPE DETAIL @ L4x4 AND HSS12x8 (D5)

SCALE: 1 1/2"=1'-0" S-211, S-211A, S-212, S-213, S-214, S-212A, S-213A

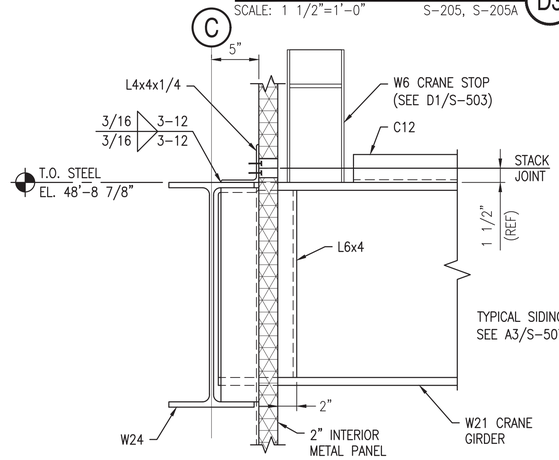

METAL PANEL STACK JOINT DETAIL @ CRANE GIRDER (C3)

SCALE: 1 1/2"=1'-0" S-104

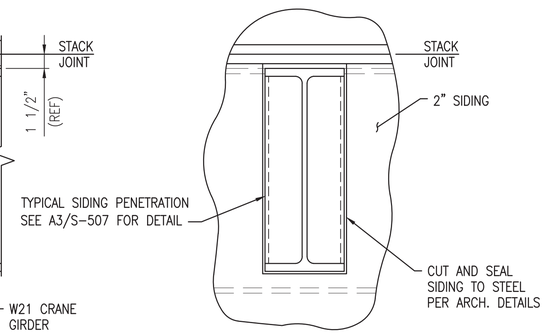

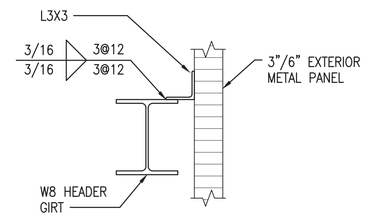

TYP. SECTION AT W8 W/ L3X3 HEADER GIRT (C5)

SCALE: 1 1/2"=1'-0" S-201, S-202, S-203, S-204, S-201A, S-202A, S-203A

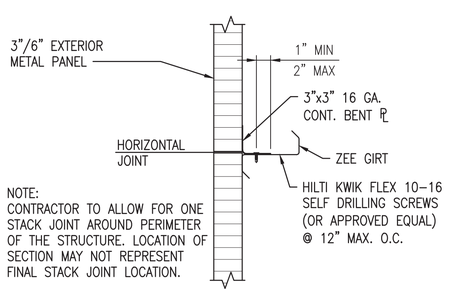

NOTE:
CONTRACTOR TO ALLOW FOR ONE STACK JOINT AROUND PERIMETER OF THE STRUCTURE. LOCATION OF SECTION MAY NOT REPRESENT FINAL STACK JOINT LOCATION.

TYP. EXTERIOR SIDING STACK JOINT (B1)

SCALE: 1 1/2"=1'-0" S-201,S-202,S-203,S-204 S-201A, S-202A, S-203A

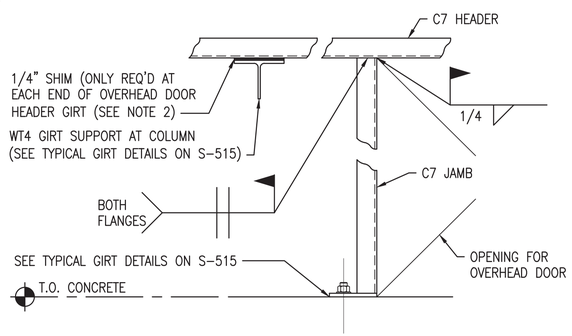

TYP. GIRT CONN. DETAIL @ O.H. DOOR (B2)

SCALE: 1 1/2"=1'-0" S-201A, S-203A

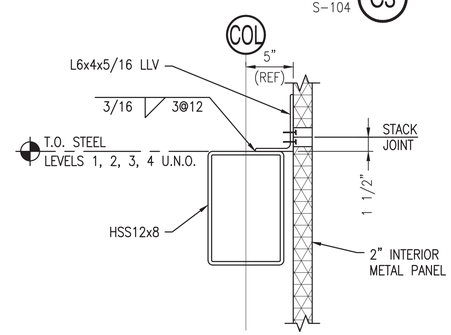

TYP. INTERIOR METAL PANEL STACK JOINT (B3)

SCALE: 1 1/2"=1'-0" S-211,S-212,S-213,S-214 S-211A, S-212A, S-213A

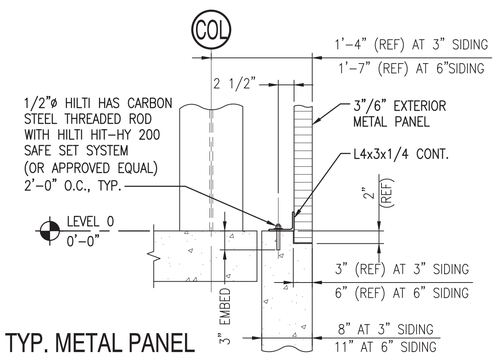

TYP. METAL PANEL BASE ATTACHMENT DETAIL (B5)

SCALE: 1"=1'-0" S-201,S-201A, S-202, S-202A, S-203, S-203A, S-204, S-509

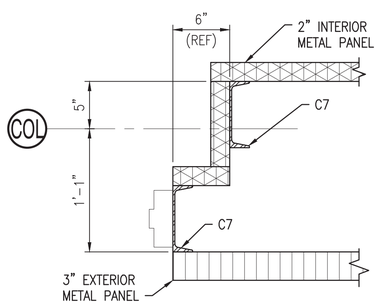

DETAIL AT MANDOOR (A1)

SCALE: 1 1/2"=1'-0" S-204

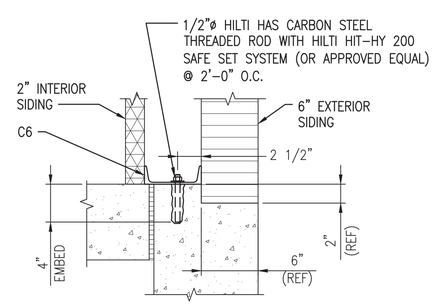

GIRT ATTACHMENT TO SLAB DETAIL (A4)

SCALE: 1 1/2"=1'-0" S-205A

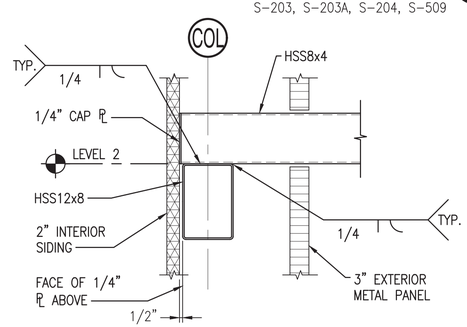

PENETRATION @ MECH DUCT SUPPORT (A5)

SCALE: 1"=1'-0" S-101, S-101A, S-102

0 1/2' 1' 2' Scale: 1" = 1'-0"

0 1/2' 1' 1 1/2' Scale: 1 1/2" = 1'-0"

SYM	DESCRIPTION	DATE	APPR
0	ISSUED FOR CONSTRUCTION	10/28/2016	CBC

NAVFAC

STATE OF MAINE
BRIAN J. BEAULIEU
No. 12004
LICENSED
PROFESSIONAL ENGINEER
10/28/16
SEAL

Colby Company engineering

A/E INFO

APPROVED
Daniel W. Greenfield
FOR COMMANDER NAVFAC

ACTIVITY
TIM FISHER
C. 2370.6 BRANCH HEAD

SATISFACTORY TO DATE 10/28/2016

DES DS DRW BCH CHK CBC
PMDM PETER STOCKLESS
BRANCH MANAGER IAN BODWELL
FEA/DP/M&E AMIN BAHROUR
FIRE PROTECTION PATRICK BAKAJ

DEPARTMENT OF THE NAVY
NAVAL FACILITIES ENGINEERING COMMAND
PUBLIC WORKS DEPARTMENT - MAINE

NAVAL FACILITIES ENGINEERING COMMAND ~ MID-ATLANTIC
NAVAL SHIPYARD - PORTSMOUTH, NH

PORTSMOUTH NAVAL SHIPYARD
DRY DOCK #1 DEFUELING COMPLEX
DRE-7

KITTERY, ME

STRUCTURAL SECTIONS AND DETAILS

EPROJECT NO.: 1363311

CONSTR. CONTR. NO.
N40085-17-C-5002

NAVFAC DRAWING NO.
12735022

SHEET 51 OF 117

S-511 DD1-16-1103

DRAWFORM REVISION: 10 OCTOBER 2014

10/28/2016 7:02:39 AM X:\297 PORTSMOUTH NAVAL SHIPYARD\297.005.001 - DD#1 DEFUELING COMPLEX DESIGN\DRAWINGS\DRE7\SHEETS\S-511.DWG

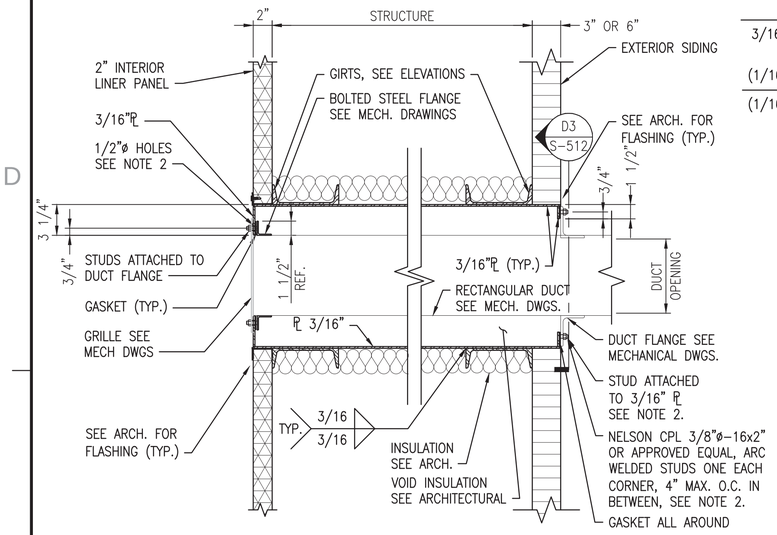

SECTION AT DUCT PENETRATION (D1)

SCALE: 1 1/2"=1'-0" S-202, S-202A

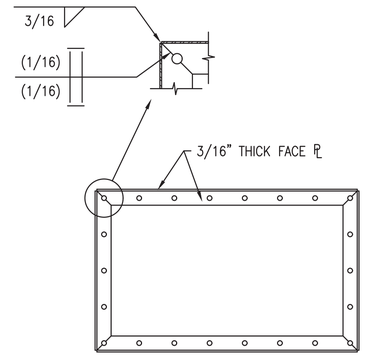

DUCT SECTION-DETAIL (D3)

SCALE: 1 1/2"=1'-0" S-512

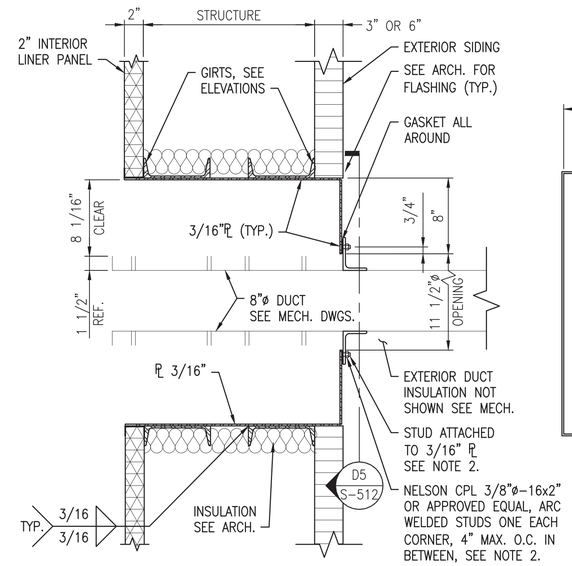

SECTION AT ENGINEERED DUCT PENETRATION (D4)

SCALE: 1 1/2"=1'-0" S-202, 202A

NOTES

1. SEE S-001 FOR NOTES.
2. STUDS AND HOLES IN FLANGES SHALL BE FIELD LOCATED AND INSTALLED. CONTRACTOR TO COORDINATE LOCATIONS OF HOLES/STUDS BETWEEN DUCTWORK AND STEEL PLATE.

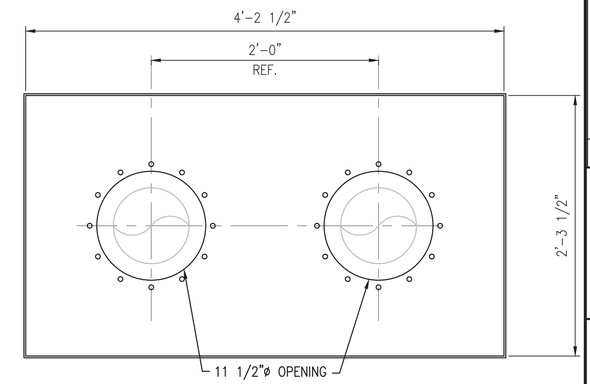

SECTION AT OPENING (D5)

SCALE: 1 1/2"=1'-0" S-202, 202A

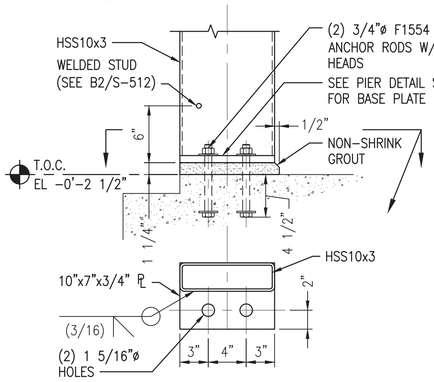

DETAIL AT TELESCOPING DOOR JAMB BASE (B1)

SCALE: 1 1/2"=1'-0" S-205A

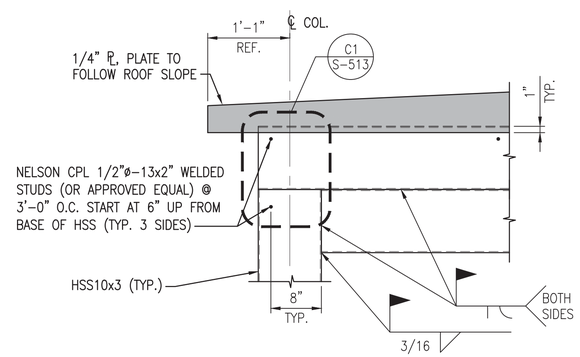

DETAIL AT TELESCOPING DOOR HEAD (B2)

SCALE: 1"=1'-0" S-205A, S-512, S-513, S-514

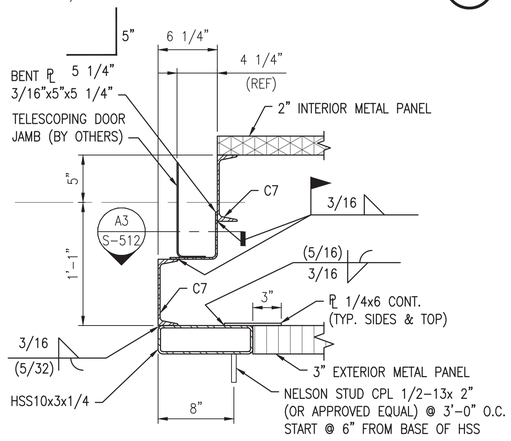

DETAIL AT TELESCOPING DOOR (W/ STUDS) (A1)

SCALE: 1 1/2"=1'-0" S-203A, S-213A

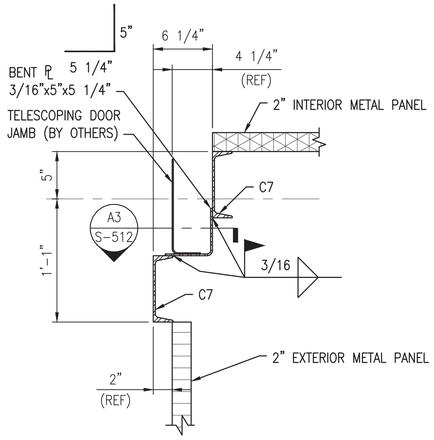

DETAIL AT TELESCOPING DOOR (NO STUDS) (A2)

SCALE: 1 1/2"=1'-0" S-201A, S-211A

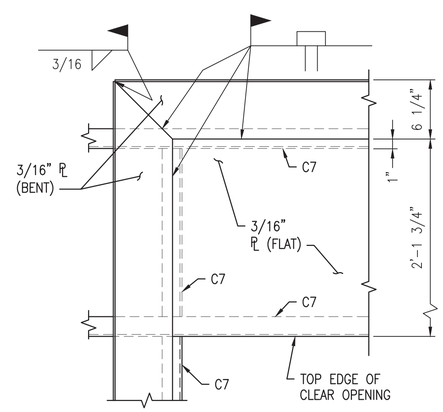

SECTION AT PLATE ATTACHMENT (A3)

SCALE: 1 1/2"=1'-0" S-512

0 1/2' 1' 1 1/2'
Scale: 1 1/2" = 1'-0"
0 1/2' 1' 2'
Scale: 1" = 1'-0"
0 1' 2' 3'
Scale: 3/4" = 1'-0"

SYM	DESCRIPTION	DATE	APPR
0	ISSUED FOR CONSTRUCTION	10/28/2016	CBC

NAVFAC

STATE OF MAINE — BRIAN J. BEAULIEU No. 12004 — LICENSED PROFESSIONAL ENGINEER — 10/28/16 — SEAL

Colby Company engineering

A/E INFO

APPROVED (Signature) — FOR COMMANDER NAVFAC

ACTIVITY: TIM FISHER, C. 2370.6 BRANCH HEAD

SATISFACTORY TO DATE 10/28/2016

DES DS | DRW BCH | CHK CBC

PM/DM PETER STOCKLESS

BRANCH MANAGER IAN BODWELL

FEAD/PM&E AMIN BAHROUR

FIRE PROTECTION PATRICK BAKAJ

DEPARTMENT OF THE NAVY — NAVAL FACILITIES ENGINEERING COMMAND — NAVAL FACILITIES ENGINEERING COMMAND ~ MID-ATLANTIC — PUBLIC WORKS DEPARTMENT - MAINE — NAVAL SHIPYARD - PORTSMOUTH, NH

PORTSMOUTH NAVAL SHIPYARD — KITTERY, ME

DRY DOCK #1 DEFUELING COMPLEX DRE-7

STRUCTURAL SECTIONS AND DETAILS

EPROJECT NO.: 1363311

CONSTR. CONTR. NO.: N40085-17-C-5002

NAVFAC DRAWING NO.: 12735023

SHEET 52 OF 117

S-512 | DD1-16-1104

DRAWFORM REVISION: 10 OCTOBER 2014

10/28/2016 7:03:01 AM X:\297 PORTSMOUTH NAVAL SHIPYARD\297.005.001 - DDH1 DEFUELING COMPLEX DESIGN\DRAWINGS\DRE7\SHEETS\S-512.DWG

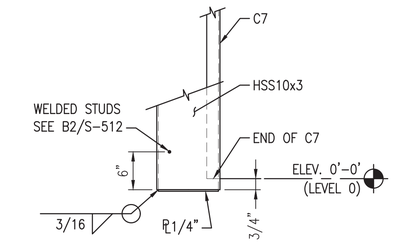

DETAIL AT DOOR JAMB BASE (D1)

SCALE: 1"=1'-0" S-203A

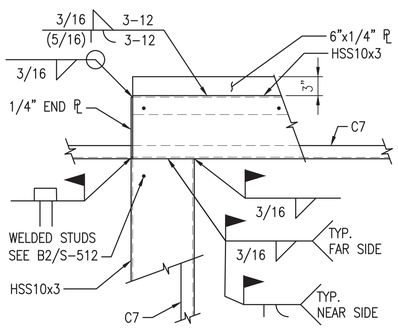

DETAIL AT DOOR HEAD (C1)

SCALE:1"=1'-0" S-203A, S-512

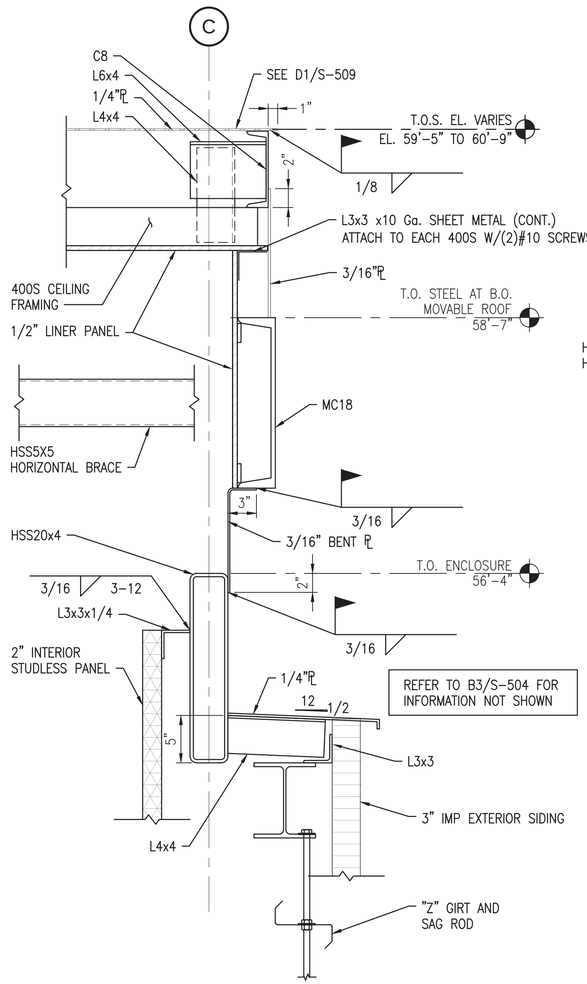

FIXED ROOF SIDE DETAIL (B2)

SCALE: 1 1/2"=1'-0" S-105, S-106, S-107

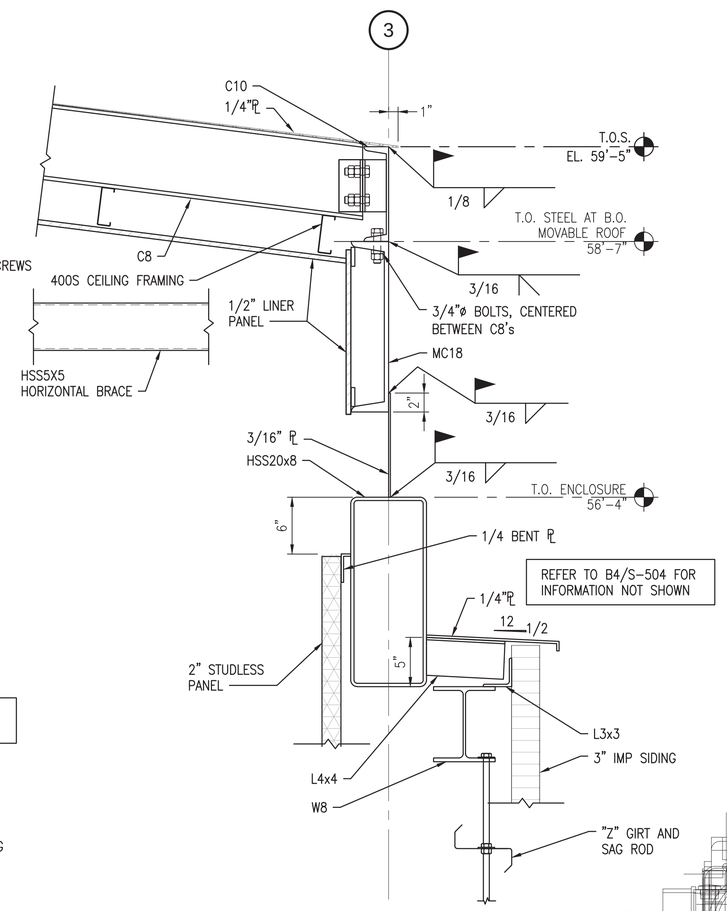

FIXED ROOF END DETAIL (B4)

SCALE: 1 1/2"=1'-0" S-105, S-106, S-107, S-211, S-211A, S-212, S-213

NOTES

1. SEE S-001 FOR NOTES.
2. SEE CRANE RAIL DESIGN NOTES ON S-001 FOR RAIL ALIGNMENT CRITERIA. NOTE THAT ANY FIELD ADJUSTMENTS MADE MUST MAINTAIN A CONTINUOUS SEAL BETWEEN THE ROOF AND PERMANENT STRUCTURE.

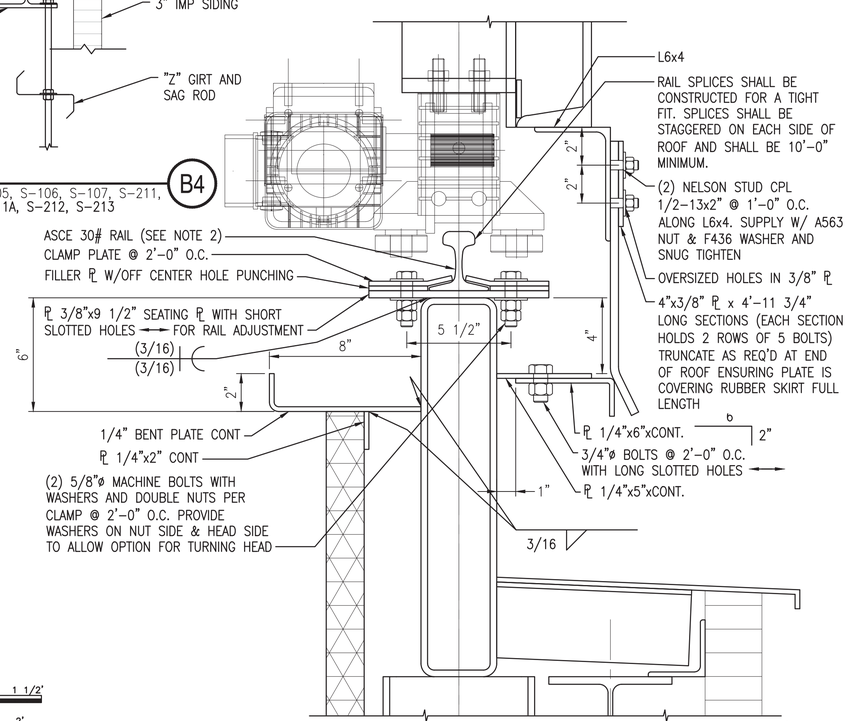

MOVABLE ROOF RAIL DETAIL (A4)

SCALE:3" = 1'-0" S-504

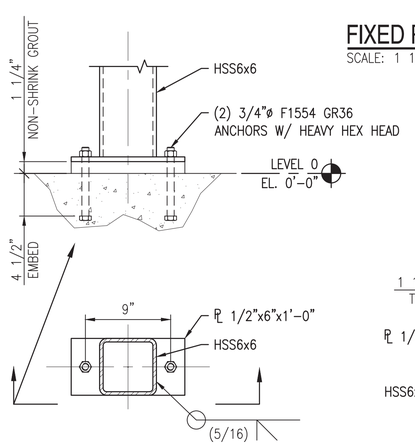

HSS COLUMN DETAIL (A1)

SCALE: 1 1/2"=1'-0" S-205A

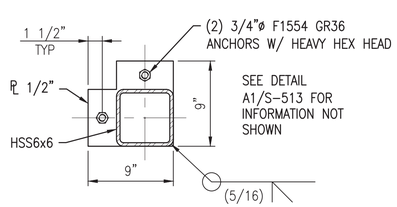

HSS CORNER COLUMN DETAIL (A2)

SCALE: 1 1/2"=1'-0" S-205A

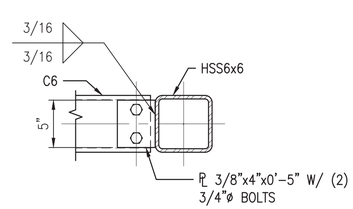

HSS COL. TO GIRT CONN. DETAIL (A3)

SCALE: 1 1/2"=1'-0" S-205A

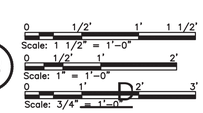

SYM	DESCRIPTION	DATE	APPR
0	ISSUED FOR CONSTRUCTION	10/28/2016	CBC

NAVFAC

STATE OF MAINE — BRIAN J. BEAULIEU No. 12004 — LICENSED PROFESSIONAL ENGINEER — 10/28/16 — SEAL

Colby Company engineering — A/E INFO

APPROVED (Signature) — FOR COMMANDER NAVFAC

ACTIVITY: TIM FISHER, C. 2370.6 BRANCH HEAD

SATISFACTORY TO — DATE 10/28/2016

DES DS — DRW TJG — CHK CBC

PMDM: PETER STOCKLESS

BRANCH MANAGER: IAN BODWELL

FEAD/PM&E: AMIN BAHROUR

FIRE PROTECTION: PATRICK BAKAJ

DEPARTMENT OF THE NAVY — NAVAL FACILITIES ENGINEERING COMMAND — PUBLIC WORKS DEPARTMENT - MAINE

NAVAL FACILITIES ENGINEERING COMMAND – MID-ATLANTIC — NAVAL SHIPYARD - PORTSMOUTH, NH

PORTSMOUTH NAVAL SHIPYARD — KITTERY, ME

DRY DOCK #1 DEFUELING COMPLEX DRE-7

STRUCTURAL SECTIONS AND DETAILS

EPROJECT NO.: 1363311

CONSTR. CONTR. NO.: N40085-17-C-5002

NAVFAC DRAWING NO.: 12735024

SHEET 53 OF 117

S-513 | DD1-16-1105

DRAWFORM REVISION: 10 OCTOBER 2014

10/28/2016 7:03:18 AM X:\297 PORTSMOUTH NAVAL SHIPYARD\297.005.001 - DD#1 DEFUELING COMPLEX DESIGN\DRAWINGS\DRE7\SHEETS\S-513.DWG

NOTES

1. SEE S-001 FOR NOTES.

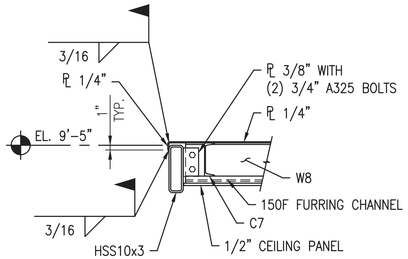

SECTION D1
SCALE: 3/4"=1'-0" S-401A

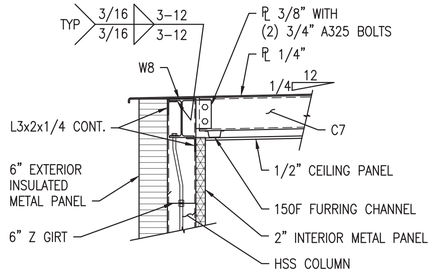

SECTION D2
SCALE: 3/4"=1'-0" S-401A

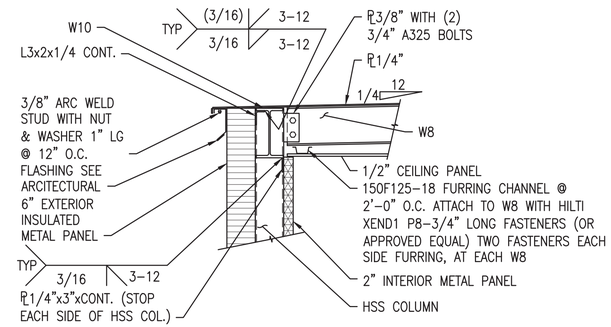

SECTION AT PW-08 CONNECTION D3
SCALE: 3/4"=1'-0" S-401, S-401A

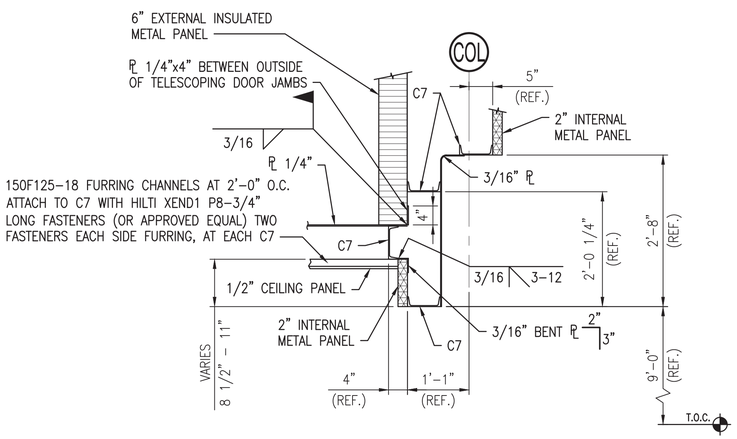

SECTION C1
SCALE: 3/4"=1'-0" S-401A

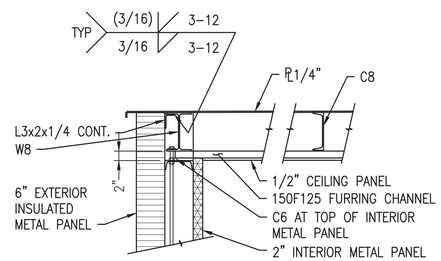

SECTION AT PW-08 BUMPOUT C3
SCALE: 3/4"=1'-0" S-401, S-401A

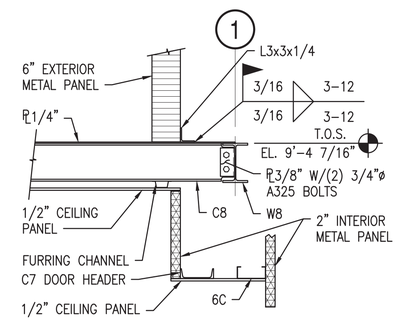

SECTION AT PW-08 BUMPOUT C4
SCALE: 3/4"=1'-0" S-401A

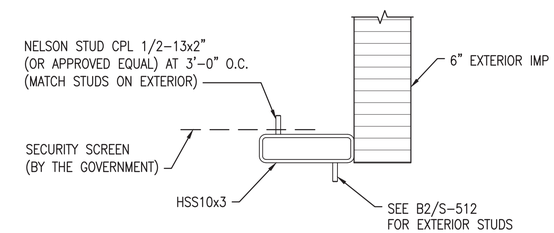

SECTION AT SECURITY SCREEN ATTACHMENT C5
SCALE: 1 1/2"=1'-0" S-205A

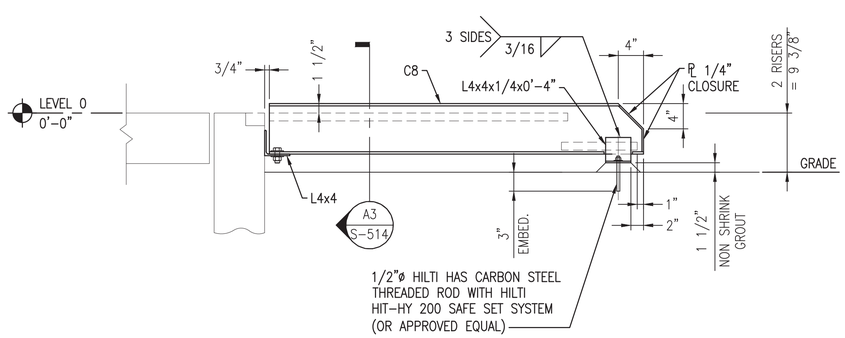

SECTION EXTERNAL LANDING PLATFORM A1
SCALE: 1"=1'-0" S-101, S-101A

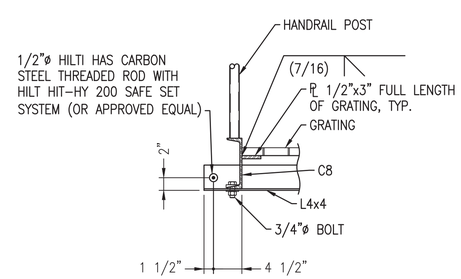

SECTION A3
SCALE: 1"=1'-0" S-514

Scale: 3/4" = 1'-0"

SYM	DESCRIPTION	DATE	APPR
0	ISSUED FOR CONSTRUCTION	10/28/2016	CBC

NAVFAC

STATE OF MAINE BRIAN J. BEAULIEU No. 12004 LICENSED PROFESSIONAL ENGINEER 10/28/16 SEAL

Colby Company engineering

A/E INFO

APPROVED Daniel W. Greenfield FOR COMMANDER NAVFAC

ACTIVITY TIM FISHER C. 2370.6 BRANCH HEAD

SATISFACTORY TO DATE 10/28/2016

DES DS DRW TJG CHK CBC

PM/DM PETER STOCKLESS

BRANCH MANAGER IAN BODWELL

FEA/PM/AE AMIN BAHROUR

FIRE PROTECTION PATRICK BAKAJ

DEPARTMENT OF THE NAVY
NAVAL FACILITIES ENGINEERING COMMAND
PUBLIC WORKS DEPARTMENT - MAINE

NAVAL FACILITIES ENGINEERING COMMAND ~ MID-ATLANTIC
NAVAL SHIPYARD - PORTSMOUTH, NH

PORTSMOUTH NAVAL SHIPYARD
KITTERY, ME

DRY DOCK #1 DEFUELING COMPLEX DRE-7

STRUCTURAL SECTIONS & DETAILS

EPROJECT NO.: 1363311

CONSTR. CONTR. NO. N40085-17-C-5002

NAVFAC DRAWING NO. 12735025

SHEET 54 OF 117

S-514 DD1-16-1106

DRAWFORM REVISION: 10 OCTOBER 2014

10/28/2016 7:03:42 AM X:\297 PORTSMOUTH NAVAL SHIPYARD\297.005.001 - DD#1 DEFUELING COMPLEX DESIGN\DRAWINGS\DRE7\SHEETS\S-514.DWG

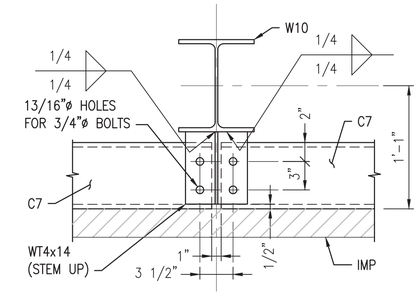

NOTE: WT4 CAN BE STEM DOWN WHEN C7 IS TOES UP

TYP GIRT CONN AT INTERIOR W-COL (D1)

SCALE: 1 1/2"=1'-0"

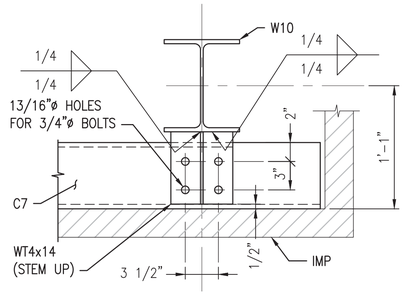

NOTE: WT4 CAN BE STEM DOWN WHEN C7 IS TOES UP

TYP GIRT CONN W-COL AT CORNER (D2)

SCALE: 1 1/2"=1'-0"

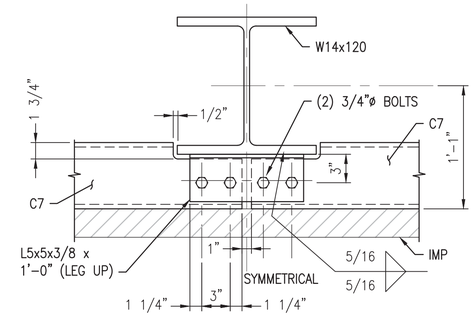

TYP GIRT CONN AT INTERIOR W14 COL (D3)

SCALE: 1 1/2"=1'-0"

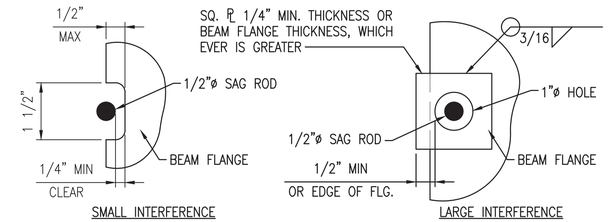

TYP. SAG ROD INTERFERENCE WITH LARGE BEAM FLANGE DETAILS (D4)

SCALE: 6"=1'-0"

NOTES

1. SEE S-001 FOR NOTES.

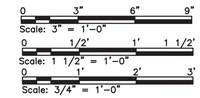

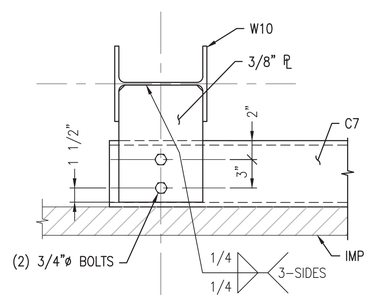

GIRT CONN AT INTERIOR W-COL (C1)

SCALE: 1 1/2"=1'-0"

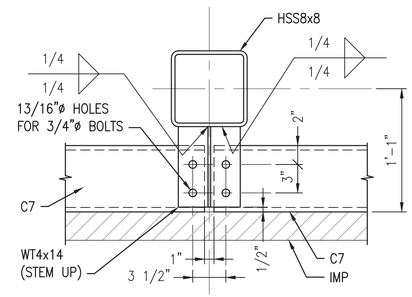

NOTE: WT4 CAN BE STEM DOWN WHEN C7 IS TOES UP

TYP GIRT CONN AT INTEROR HSS COL (C2)

SCALE: 1 1/2"=1'-0"

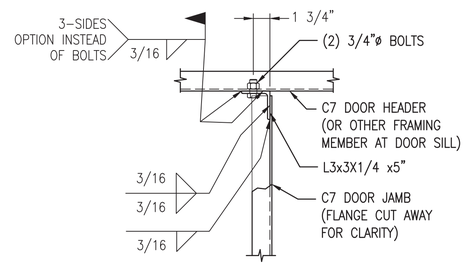

TYP GIRT CONN AT DOOR JAMB (C3)

SCALE: 1 1/2"=1'-0"

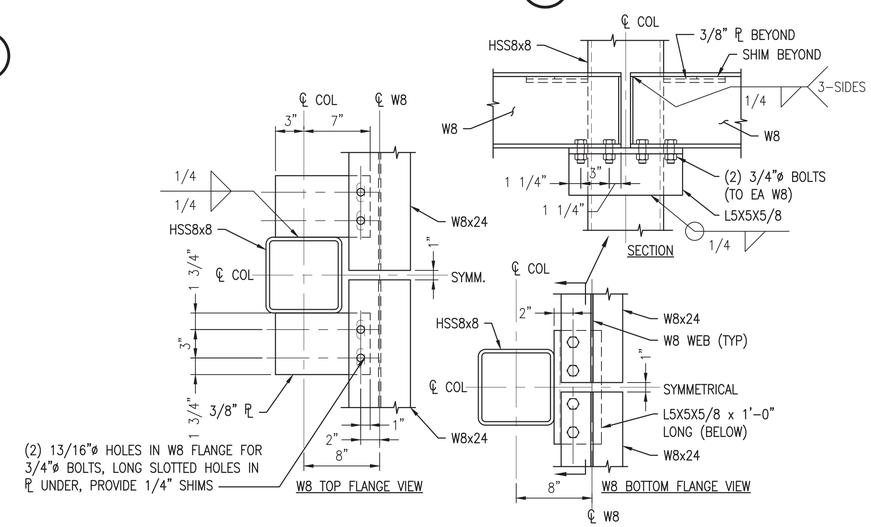

TYP. HSS-COL TO HEADER GIRT (C4)

SCALE: 1 1/2"=1'-0"

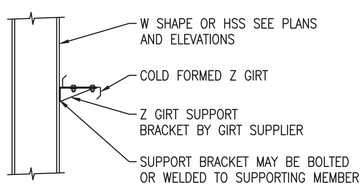

TYP. Z-GIRT ATTACHMENT DETAIL (B1)

SCALE: 3/4"=1'-0"

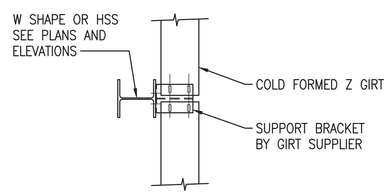

TYP. Z-GIRT ATTACHMENT DETAIL (B2)

SCALE: 3/4"=1'-0"

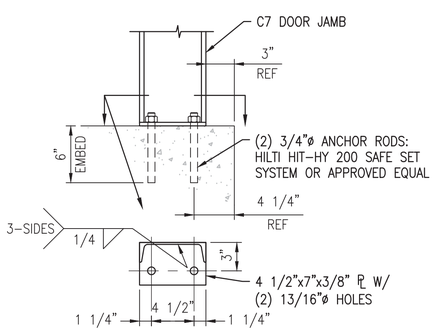

TYP. DOOR JAMB TO FLOOR SLAB (A1)

SCALE: 1 1/2"=1'-0"

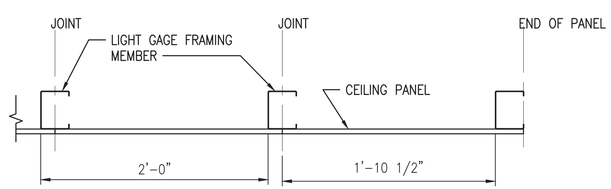

TYPICAL CEILING PANEL JOINT ARRANGEMENT DETAIL (A2)

SCALE: 1 1/2"=1'-0"

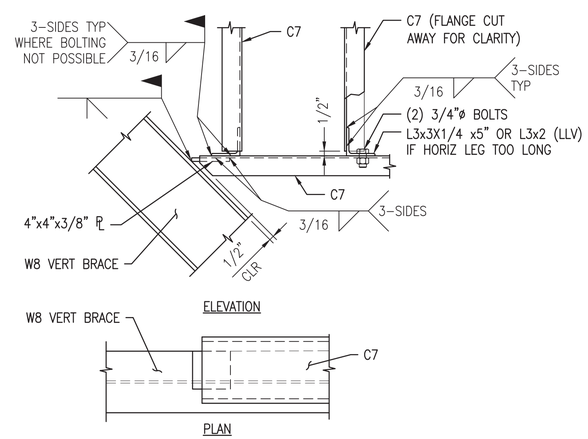

TYP GIRT CONN AT VERTICAL W-BRACE AND DUCT PENETRATION (A3)

SCALE: 1 1/2"=1'-0"

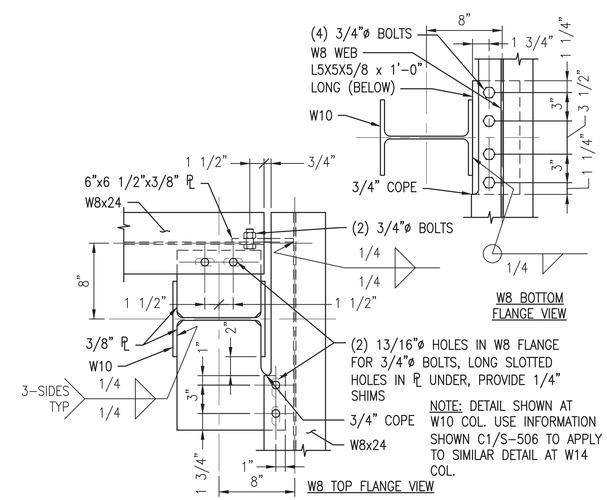

NOTE: DETAIL SHOWN AT W10 COL. USE INFORMATION SHOWN C1/S-506 TO APPLY TO SIMILAR DETAIL AT W14 COL.

TYP. CORNER AT W-COL TO HEADER GIRT (A5)

SCALE: 1 1/2"=1'-0"

SYM	DESCRIPTION	DATE	APPR
0	ISSUED FOR CONSTRUCTION	10/28/2016	CBC

NAVFAC

STATE OF MAINE — BRIAN J. BEAULIEU No. 12004 — LICENSED PROFESSIONAL ENGINEER — 10/28/16 — SEAL

Colby Company engineering — A/E INFO

APPROVED (Commander) — FOR COMMANDER NAVFAC

ACTIVITY: TIM FISHER, C. 2370.6 BRANCH HEAD

SATISFACTORY TO DATE 10/28/2016

DES	DS	DRW	BCH	CHK	CBC

PM/DM: PETER STOCKLESS
BRANCH MANAGER: IAN BODWELL
FEAD/PM&E: AMIN BAHROUR
FIRE PROTECTION: PATRICK BAKAJ

DEPARTMENT OF THE NAVY
NAVAL FACILITIES ENGINEERING COMMAND – MID-ATLANTIC
NAVAL FACILITIES ENGINEERING COMMAND
NAVAL SHIPYARD - PORTSMOUTH, NH
PUBLIC WORKS DEPARTMENT - MAINE
KITTERY, ME
PORTSMOUTH NAVAL SHIPYARD
DRY DOCK #1 DEFUELING COMPLEX
DRE-7
TYPICAL GIRT SECTIONS AND DETAILS

EPROJECT NO.: 1363311
CONSTR. CONTR. NO.: N40085-17-C-5002
NAVFAC DRAWING NO.: 12735026
SHEET 55 OF 117

S-515 | DD1-16-1107

DRAWFORM REVISION: 10 OCTOBER 2014

10/28/2016 7:04:17 AM X:\297 PORTSMOUTH NAVAL SHIPYARD\297.005.001 - DD#1 DEFUELING COMPLEX DESIGN\DRAWINGS\DRE7\SHEETS\S-515.DWG

NOTES

1. SEE S-001 FOR NOTES.
2. SPLICE ASD FORCES:
   TENSION = 50 KIPS
   SHEAR X = 5 KIPS
   SHEAR Y = 5 KIPS
   Mx = 5 KIP-FT
   My = 5 KIP-FT

GRAPHICAL COLUMN SCHEDULE

T.O. ENCLOSURE												T.O. ENCLOSURE
56'-4" CRANE LEVEL		HSS8X8X3/8		HSS8X8X3/8	HSS8X8X3/8		HSS8X8X3/8					56'-4" CRANE LEVEL
48'-8 7/8" LEVEL 3	W10X33	HSS8X8X3/8	W10X33	HSS8X8X3/8	HSS8X8X3/8	W10X33	HSS8X8X3/8	W10X33				48'-8 7/8" LEVEL 3
38'-2" COLUMN SPLICE		HSS8X8X3/8		HSS8X8X3/8	HSS8X8X3/8		HSS8X8X3/8					38'-2" COLUMN SPLICE
31'-1" LEVEL 2		HSS8X8X3/8		HSS8X8X3/8	HSS8X8X3/8		HSS8X8X3/8					31'-1" LEVEL 2
27'-1" T.O. LOWER ROOF	W10X33	HSS8X8X3/8	W10X33	HSS8X8X3/8	HSS8X8X3/8	W10X33	HSS8X8X3/8	W10X33				27'-1" T.O. LOWER ROOF
16'-0" LEVEL 0		HSS8X8X3/8		HSS8X8X3/8	HSS8X8X3/8		HSS8X8X3/8		HSS6X6X3/8	HSS6X6X3/8	HSS6X6X3/8	16'-0" LEVEL 0
0'-0"												0'-0"
COLUMN LOCATIONS	C-1	C-2	C-3	D-1	D-3	E-1	E-2	E-3	.6-B.3	1.4-B.3	.6-C.8	
BASEPLATE TYPE	BP-1	BP-2	BP-1	BP-2	BP-2	BP-1	BP-2	BP-1	SEE PLANS	SEE PLANS	SEE PLANS	

GRAPHICAL COLUMN SCHEDULE WITHOUT STORAGE ANNEX

SCALE: N.T.S.

A1

SYM	DESCRIPTION	DATE	APPR
0	ISSUED FOR CONSTRUCTION	10/28/2016	CBC

NAVFAC

STATE OF MAINE
BRIAN J. BEAULIEU
No. 12004
LICENSED
PROFESSIONAL ENGINEER
10/28/16
SEAL

Colby Company engineering
A/E INFO

APPROVED
Signature
Daniel W. Greenfield
FOR COMMANDER NAVFAC

ACTIVITY
TIM FISHER
C. 2370.6 BRANCH HEAD

SATISFACTORY TO DATE 10/28/2016

DES	DS	DRW	ERB	CHK	CBC

PMDM PETER STOCKLESS
BRANCH MANAGER IAN BODWELL
FEAD/PMAE AMIN BAHROUR
FIRE PROTECTION PATRICK BAKAJ

DEPARTMENT OF THE NAVY
NAVAL FACILITIES ENGINEERING COMMAND
PUBLIC WORKS DEPARTMENT - MAINE
NAVAL FACILITIES ENGINEERING COMMAND ~ MID-ATLANTIC
NAVAL SHIPYARD - PORTSMOUTH, NH
PORTSMOUTH NAVAL SHIPYARD
KITTERY, ME
DRY DOCK #1 DEFUELING COMPLEX
DRE-7
COLUMN SCHEDULE

EPROJECT NO.: 1363311
CONSTR. CONTR. NO. N40085-17-C-5002
NAVFAC DRAWING NO. 12735027
SHEET 56 OF 117

S-600 | DD1-16-1108

DRAWFORM REVISION: 10 OCTOBER 2014

10/28/2016 7:04:22 AM X:\297 PORTSMOUTH NAVAL SHIPYARD\297.005.001 - DD#1 DEFUELING COMPLEX DESIGN\DRAWINGS\DRE7\SHEETS\S-600.DWG

NOTES

1. SEE S-001 FOR NOTES.
2. SPLICE ASD FORCES:
   TENSION = 50 KIPS
   SHEAR X = 5 KIPS
   SHEAR Y = 5 KIPS
   Mx = 10 KIP-FT AT W14,
   5 KIP-FT ELSEWHERE
   My = 5 KIP-FT

GRAPHICAL COLUMN SCHEDULE

T.O. ENCLOSURE																				T.O. ENCLOSURE
56'-4" CRANE LEVEL							HSS8X8X3/8		HSS8X8X3/8	HSS8X8X3/8		HSS8X8X3/8								56'-4" CRANE LEVEL
48'-8 7/8" LEVEL 3						W14X120	HSS8X8X3/8	W14X120	HSS8X8X3/8	HSS8X8X3/8	W10X33	HSS8X8X3/8	W10X33							48'-8 7/8" LEVEL 3
38'-2" COLUMN SPLICE							HSS8X8X3/8		HSS8X8X3/8	HSS8X8X3/8		HSS8X8X3/8								38'-2" COLUMN SPLICE
31'-1" LEVEL 2																				31'-1" LEVEL 2
27'-1" T.O. LOWER ROOF						W14X120		W14X120	HSS8X8X3/8	HSS8X8X3/8	W10X33	HSS8X8X3/8	W10X33							27'-1" T.O. LOWER ROOF
16'-0" LEVEL 0	W10X33	W10X33	W10X33	W10X33	W10X33		HSS10X10X1/2		HSS8X8X3/8	HSS8X8X3/8		HSS8X8X3/8		HSS6X6X3/8	HSS6X6X3/8	HSS6X6X3/8	HSS10X3X1/4	HSS10X3X1/4		16'-0" LEVEL 0
0'-0"																				0'-0"
COLUMN LOCATIONS	A-1	A-2	A-3	B-1	B-3	C-1	C-2	C-3	D-1	D-3	E-1	E-2	E-3	.6-B.3	.6-B.9	.6-C.8	.5-A.1	.5-A.7		
BASEPLATE TYPE	BP-1	BP-1	BP-5	BP-1	BP-1	BP-4	BP-3	BP-4	BP-2	BP-2	BP-1	BP-2	BP-1	SEE PLANS	SEE PLANS	SEE PLANS	SEE PLANS	SEE PLANS		

GRAPHICAL COLUMN SCHEDULE

SCALE: N.T.S.

A1

SYM	DESCRIPTION	DATE	APPR
0	ISSUED FOR CONSTRUCTION	10/28/2016	CBC

NAVFAC

STATE OF MAINE
BRIAN J. BEAULIEU
No. 12004
LICENSED PROFESSIONAL ENGINEER
10/28/16
SEAL

Colby Company engineering
A/E INFO

APPROVED
Daniel W. Greenfield
FOR COMMANDER NAVFAC

ACTIVITY
TIM FISHER
C. 2370.6 BRANCH HEAD

SATISFACTORY TO DATE 10/28/2016

DES	DS	DRW ERB	CHK CBC

PM/DM	PETER STOCKLESS
BRANCH MANAGER	IAN BODWELL
FEAD/PM&E	AMIN BAHROUR
FIRE PROTECTION	PATRICK BAKAJ

DEPARTMENT OF THE NAVY
NAVAL FACILITIES ENGINEERING COMMAND
PUBLIC WORKS DEPARTMENT - MAINE

NAVAL FACILITIES ENGINEERING COMMAND ~ MID-ATLANTIC
NAVAL SHIPYARD - PORTSMOUTH, NH

PORTSMOUTH NAVAL SHIPYARD
KITTERY, ME

DRY DOCK #1 DEFUELING COMPLEX
DRE-7

COLUMN SCHEDULE

EPROJECT NO.: 1363311

CONSTR. CONTR. NO.
N40085-17-C-5002

NAVFAC DRAWING NO.
12735028

SHEET 57 OF 117

S-600A | DD1-16-1109

DRAWFORM REVISION: 10 OCTOBER 2014

10/28/2016 7:04:26 AM X:\297 PORTSMOUTH NAVAL SHIPYARD\297.005.001 - DDH1 DEFUELING COMPLEX DESIGN\DRAWINGS\DRE7\SHEETS\S-600A.DWG

ELEVATION, SECTION OR DETAIL SYMBOLS

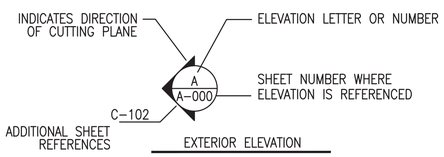

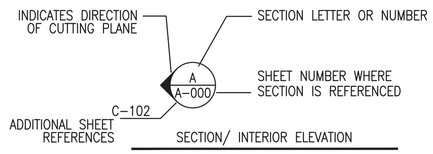

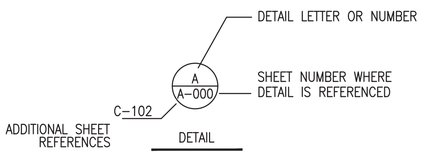

LEGEND

- CONCRETE
- STEEL
- INSULATION – RIGID
- EARTH
- CRUSHED STONE
- INSULATED METAL PANEL
- 2" STUDLESS WALL PANEL AND 1/2" LINER PANEL
- NON–SLIP PAINT SURFACE
- 204 DOOR TAG
- 1 KEYNOTE
- 2 HOUR FIRE RATED WALL
- REFERENCE PLANE ELEVATION

ABBREVIATIONS

AFF	ABOVE FINISH FLOOR
AFG	ABOVE FINISH GRADE
ACOUS.	ACOUSTICAL
ALUM	ALUMINUM
APPROX.	APPROXIMATELY
BLDG.	BUILDING
BOT.	BOTTOM
C.B.	CATCH BASIN
C.J.	CONTROL JOINT
C.O.	CLEAN OUT
C.R.	COLD ROLLED
CEM.	CEMENT
CL / ℄	CENTERLINE
CLG.	CEILING
COL.	COLUMN
CONC.	CONCRETE
CONST.	CONSTRUCTION
CONT.	CONTINUOUS
DBL.	DOUBLE
DTL.	DETAIL
DIA.	DIAMETER
DIM.	DIMENSION
DN	DOWN
DWG.	DRAWING
E.J.	EXPANSION JOINT
EA.	EACH
EL.	ELEVATION
ELECT.	ELECTRICAL
EPDM	ETHYLENE PROPYLENE DIENE MONOMER RUBBER
EQ.	EQUAL
EQUIP.	EQUIPMENT
EXIST.	EXISTING
EXP.	EXPANSION
EXT.	EXTERIOR
F/	FACE OF
F.D.	FLOOR DRAIN
FDN	FOUNDATION
FF	FINISH FLOOR
FFE	FINISHED FLOOR ELEVATION
FIN.	FINISH
FIP	FOAM IN PLACE
FLR.	FLOOR
FLUOR.	FLUORESCENT
FP	FIRE PROTECTION
FT	FEET
GA.	GAUGE
GALV.	GALVANIZED
GEN.	GENERAL
H.M.	HOLLOW METAL
HDWR	HARDWARE
HD.	HEAD
HORIZ.	HORIZONTAL
HR	HOUR
HT.	HEIGHT
HVAC	HEATING VENTILATING AIR CONDITIONING
I.D.	INSIDE DIAMETER
IMP	INSULATED METAL PANEL
IN.	INCH
INCAN.	INCANDESCENT
INSUL.	INSULATION
INT.	INTERIOR
JT.	JOINT
LT	LIGHT
LT. WT.	LIGHTWEIGHT
MANUF.	MANUFACTURER
MATL	MATERIAL
MAX.	MAXIMUM
MECH.	MECHANICAL
MIN.	MINIMUM
MLCP	INTERIOR METAL LINER CEILING PANEL
MTL	METAL
NIC	NOT IN CONTRACT
NO	NUMBER
NTS	NOT TO SCALE
O.C.	ON CENTER
O.D.	OUTSIDE DIAMETER
O.E.	ROUGH OPENING
OPP	OPPOSITE
OTS	OPEN TO STRUCTURE
PHIL	PHILLIPS
PL / ℙ	PLATE
PNSY	PORTSMOUTH NAVAL SHIPYARD
PTD	PAINTED
PW	PASSAGEWAY(S)
RAD.	RADIUS
REQ.	REQUIRED
RET.	RETAINING
RM.	ROOM
S.S.	STAINLESS STEEL
S.V.	SHEET VINYL
SCHED.	SCHEDULE
SECT.	SECTION
SHT.	SHEET
SIM.	SIMILAR
SPEC.	SPECIFICATION
SQ.	SQUARE
STD	STANDARD
STL	STEEL
STRUCT.	STRUCTURAL
T.O.	TOP OF
T.O.W.	TOP OF WALL
TEL.	TELEPHONE
THRU	THROUGH
TYP.	TYPICAL
U.O.N.	UNLESS OTHERWISE NOTED
VERT.	VERTICAL
VIF	VERIFY IN FIELD
W/	WITH
WC	WATER COLUMN
W.P.	WATERPROOF
W.W.F.	WELDED WIRE FABRIC

GENERAL NOTES

1. ANY AND ALL CRANE INFORMATION IS FOR INFORMATIONAL PURPOSES ONLY. DETAILS TO BE PROVIDED BY CRANE MANUFACTURER AND SHALL BE COORDINATED BY THE CONTRACTOR.
2. CONTRACTOR SHALL COORDINATE THE INTERIOR AND EXTERIOR FRAMING TO ENSURE SPACING AND PLACEMENT OF THE STRUCTURAL MEMBERS MEETS THE REQUIREMENTS OF BOTH THE INTERIOR AND EXTERIOR WALL SYSTEMS. THE COORDINATION SHALL INCLUDE, BUT NOT BE LIMITED TO THE FOLLOWING: PLACEMENT OF FRAMING MEMBERS, TOLERANCE OF FRAMING MEMBERS, FRAMING AT WALL SYSTEM PENETRATIONS, INSTALLATION OF UTILITIES BETWEEN THE TWO WALL SYSTEMS, AND THE CAPABILITY TO ATTACH TO THE FRAMING WITHIN THE REQUIREMENTS OF THE WALL SYSTEM MANUFACTURERS.
3. SUBMIT A WRITTEN REPORT PER SPECIFICATION SECTION 07 42 63 PARAGRAPH 3.7.2 OF DEFICIENCIES THAT ARE OBSERVED FOLLOWING INSTALLATION.
4. FLASHING SHALL BE 24GA SHEETS, SEE SPECIFICATION SECTION 07 60 00. FLASHING COLOR: SELECTED BY GOVERNMENT.
5. ALL WELDING FOR ARCHITECTURAL ITEMS SHALL BE PER APPLICABLE SPECIFICATION SECTIONS. RECOMMENDED THAT WELDING OF ARCHITECTURAL ITEMS (EX. FLASHING, COMPLEMENTING WALL / CEILING SUPPORTS) BE SHOP FABRICATED TO GREATEST EXTENT POSSIBLE PRIOR TO ERECTION OF STRUCTURAL MEMBERS. ALL EXTERIOR FACING WELDS TO BE CONTINUOUS AND WEATHERTIGHT.
6. FLASHING SHALL BE A COMBINATION OF THE WALL SYSTEM MANUFACTURERS STANDARD FLASHING AS REQUIRED TO MEET WARRANTY REQUIREMENTS AND CUSTOM FLASHING. THE EXTERIOR WALL SYSTEM WILL EXPERIENCE NEGATIVE PRESSURE FROM THE HVAC SYSTEM. ALL FLASHING SHALL BE DESIGNED TO KEEP WATER FROM ENTERING THE BUILDINGS.
7. BUILDING SEALING: THE COMBINED PRODUCT OF THE BUILDING ELEMENTS, INTERIOR AND EXTERIOR FLASHING, AND INTERIOR AND EXTERIOR SEALS SHALL BE INSTALLED SO AS TO BE CAPABLE OF RESISTING THE REQUIRED 0.2" WATER COLUMN VACUUM LOAD.
8. RESINOUS FLOOR COATINGS PLACED ON NEW CONCRETE SHALL BE TESTED TO ENSURE THAT THE MOISTURE LEVELS MEET THOSE REQUIRED BY THE COATING MANUFACTURER. SUBMIT MOISTURE LEVEL COMPLIANCE TESTS PER THE SPECIFICATION 15 DAYS PRIOR TO PLACEMENT OF COATINGS.
9. UNLESS NOTED OTHERWISE ALL DETAILS AND RELEVANT DIMENSIONS FOR EXTERIOR STAIRS, GRATING, LANDINGS, RAILINGS AND LADDERS ARE TO BE FOUND IN STRUCTURAL.
10. ALL FIXED GUARD RAILING TO BE 42" HIGH UNLESS STATED OTHERWISE. ALL HANDRAIL TO BE 34" HIGH UNLESS STATED OTHERWISE.
11. DUE TO THE OPERATIONAL REQUIREMENTS AND UNIQUE BUILDING ENVELOPE CIRCUMSTANCES, THERMAL BRIDGING IS TO BE MINIMIZED WHEREVER POSSIBLE WITHIN THE STRUCTURE. FOAM–IN–PLACE INSULATION IS TO BE USED AT ALL LOCATIONS WHERE ROCK–WOOL INSULATION IS UNABLE TO BE PLACED.
12. NO UNCONTROLLED OPENINGS IN ANY ENCLOSURE TO BE GREATER THAN 96 SQUARE INCHES DUE TO SECURITY REQUIREMENTS.
13. ALL INTERIOR FACING FASTENERS TO BE CAPTIVE FASTENING, UNLESS STATED OR DETAILED OTHERWISE, IN ORDER TO PREVENT ANY POTENTIAL DEBRIS WITHIN AREA OF OPERATIONS.
14. ALL SAFETY GATES TO BE 24" WIDE UNLESS SHOWN OTHERWISE IN DRAWINGS.

MATERIALS

EXTERIOR

INSULATED METAL PANEL (IMP) ASSEMBLIES
SPECIFICATION SECTION (07 42 63)

1. THE MAIN MATERIAL TO BE USED AS THE VERTICAL PROTECTIVE SKIN OF THE STRUCTURES IS TO BE INSULATED METAL PANEL (IMP) AND CONSISTS OF EITHER A 3 IN THICK PANEL OR A 6 INCH (2HR FIRE RATED) PANEL AS SHOWN IN THE DRAWINGS. THE IMP PANEL IS A SINGLE–COMPONENT SYSTEM PROVIDING AN EXTERIOR WEATHER BARRIER, INSULATING CORE AND INTERIOR VAPOR BARRIER.
2. AIR LEAKAGE MUST CONFORM TO THE LIMITS THROUGH THE WALL ASSEMBLY AREA WHEN TESTED ACCORDING TO ASTM E283.
3. THE IMP SHALL HAVE ABSOLUTELY NO UNCONTROLLED WATER PENETRATION THROUGH ANY OF THE PANEL JOINTS, HAVE NO WATER PENETRATION WHEN TESTED IN ACCORDANCE WITH ASTM E331, HAVE NO EVIDENCE OF WATER LEAKAGE WHEN TESTED ACCORDING TO AAMA 501.1 AND BE ABLE TO COMPLETELY RESIST WATER INFILTRATION AT THE FACILITY REQUIRED 0.2" WC VACUUM LOAD ON THE INTERIOR OF THE STRUCTURE.
4. THE IMP SHALL HAVE A POLYISO OR POLYURETHANE FOAM CORE AND SHALL PROVIDE A MINIMUM R–VALUE OF 7.5/IN OF THICKNESS WHEN TESTED IN ACCORDANCE WITH ASTM C518 AT A MEAN TEMPERATURE OF 75 DEG F.
5. JOINTS BETWEEN WALL PANELS REQUIRE AN EXTENSIVE AND PARTICULAR SEALANT REQUIREMENTS AND ARE OF HIGH IMPORTANCE TO OPERATIONS. SEALANT SHALL MEET THE REQUIREMENTS OF THE WALL PANEL MANUFACTURER SPECIFICATION SECTION (07 42 63) AND JOINT SEALANT SPECIFICATION SECTION (07 92 00).
6. IN ALL BASE AND STACK JOINT CONDITIONS, IMP TO HAVE A MINIMUM AND CONTINUOUS 3" HEIGHT VERTICAL LEG FOR PANEL ATTACHMENT BEHIND. THERE IS TO BE A CONTINUOUS BUTYL SEALANT WITH MARRIAGE BEAD ALONG THIS CONTINUOUS FACE BETWEEN THE BACKSIDE OF THE IMP AND THE 3" HIGH VERTICAL LEG.
7. A SELF–ADHERING VAPOR BARRIER IS TO BE INSTALLED AT ALL WARM SIDE AREAS OF IMP (INTERIOR SIDE) IN BETWEEN INTERIOR FACE OF IMP AND CORNER TRIM/FLASHING PER MANUFACTURER'S STANDARD DETAILS. THIS IS TO MAINTAIN THE CONTINUOUS VAPOR BARRIER PLANE WHEREVER THE IMP ASSEMBLY IS BROKEN SUCH AS AT CORNERS, STACK JOINTS, AND IMP SIZE TRANSITIONS.
8. EXTRA CARE IS TO BE TAKEN WHEN APPLYING SEALANTS AT ALL IMP JOINTS, SEAMS AND TERMINATIONS DUE TO INTERIOR CLEANLINESS AND INTERIOR AIR REGULATION REQUIREMENTS OF THE FACILITY.
9. IMP, WHERE TO BE USED AS HORIZONTAL FACE, TO BE ADHERED TO STRUCTURE PER MANUFACTURER'S SPAN DESIGN LOAD REQUIREMENTS AND INSTALLED TO SAME PERFORMANCE REQUIREMENTS AS ALL VERTICALLY ORIENTED PANELS.

METAL PLATE ROOF

1. METAL PLATE ROOFING IT TO BE USED THROUGHOUT THE FACILITY WITH SLOPES AS SHOWN IN THE DRAWING PACKAGES. THICKNESS OF PLATE ARTICULATED WITHIN THE DRAWING PACKAGES.
2. ALL METAL PANEL ROOF EDGES TO HAVE A 2" DRIP EDGE, MEASURED OFF OF FACE OF WALL BELOW. THE DRIP EDGE IS TO RETURN DOWNWARD MINIMUM OF 1". THE UNDERSIDE OF THIS METAL PLATE ROOF EDGE IS INTENDED TO PROVIDE A WEATHER–PROTECTED FACE THAT THE TOP EDGE PERIMETER FLASHING OF THE IMP CAN FASTEN TO, IN ORDER TO BETTER COMBAT POTENTIAL WATER INFILTRATION.
3. AT THE UNDERSIDE OF ALL EXPOSED METAL PLATE ROOFING, THERE IS TO BE ROCKWOOL INSULATION ATTACHED TO UNDERSIDE OF METAL PLATE ROOFING BY WELDED PINS AND RETAINER CAPS PER MANUFACTURER'S INSTRUCTIONS. ROCKWOOL TO BE CONTINUOUS ALONG ENTIRE UNDERSIDE OF METAL PLATE ROOF AND TERMINATE AGAINST BACKSIDE OF IMP WALLS TO AVOID ANY THERMAL BRIDGING. ANY POTENTIAL GAPS AT THESE JOINTS WITH THE IMP THAT CANNOT BE FILLED WITH ROCKWOOL SHALL BE FILLED WITH FOAMED–IN–PLACE INSULATION (PER SPECIFICATION SECTION 07 21 19) IN ORDER TO AVOID ANY THERMAL BRIDGING AND TO CREATE FULLY INSULATED BOUNDARY WITHIN THE STRUCTURES.

INTERIOR

ALL INTERIOR FINISHES SHALL MEET THE REQUIREMENTS OF CLASS A OF NFPA 801 (FLAME SPREAD INDEX BETWEEN 0–25 AND SMOKE DEVELOPED INDEX BETWEEN 0–450). NO OPENING GREATER THAN 96 SQ IN ALLOWED WITHIN ANY ENCLOSURE. THIS IS FOR SECURITY PURPOSES AND IS TYP. OF ALL STRUCTURES IN COMPLEX.

INTERIOR METAL LINER CEILING PANELS (MLCP)
SPECIFICATION SECTION (07 42 13) AND AS APPLICABLE

1. THE MLCP IS TO BE INSTALLED AT ALL NON–RCA DESIGNATED AREAS WHERE ROCKWOOL INSULATION IS APPLIED TO UNDERSIDE OF METAL PLATE ROOF.

MATERIALS (CONTINUED)

2. MLCP IS TO HAVE WEATHERTIGHT SEAL AT ALL CORNERS, JOINTS AND SEAMS. CLOSURE STRIPS TO BE USED AT ALL SEAMS OF MLCP AS WELL AS AT ANY CONNECTION TO IMP WALL PANELS IN ORDER TO CREATE CONTINUOUS SEAL AT BOTH PANEL SEAMS AND PERIMETER EDGES.

INTERIOR WALL AND CEILING SYSTEM
SPECIFICTAION SECTION (09 73 00) AND AS APPLICABLE

1. THE INTERIOR WALL AND CEILING SYSTEM IS DESIGNED TO FORM AN AIRTIGHT BARRIER SYSTEM WITHIN THE INTERIOR BUILDING FACES AND SHALL BE INSTALLED IN SUCH A MANNER THAT IT CAN RESIST 0.2" WC VACUUM LOAD FROM THE BUILDING HVAC SYSTEM.
2. THE INTERIOR WALL AND CEILING SYSTEM IS TO BE USED IN ALL RADIOLOGICALLY CONTROLLED AREAS (RCA) OF THE DD#1 COMPLEX.
3. THE INTERIOR SURFACES OF THE ENCLOSURE ARE DESIGNED TO BE SMOOTH, CLEANABLE, AND COMPLETELY SEALED IN ORDER TO MAINTAIN THE NEGATIVE AIR PRESSURE WORKING CONDITIONS. THIS IS ACCOMPLISHED USING THE PRODUCTS SPECIFIED AND PROPER APPLICATION AND INSTALLATION OF FLASHING, TRIM AND SEALANT AS REQUIRED TO CLOSE ALL GAPS, SEAMS AND VOIDS BETWEEN ADJACENT MATERIALS AND SURFACES.
4. CONTINUOUS SEALANT IS TO BE APPLIED AT ALL PANEL SEAMS, TERMINATIONS AND TRIM EDGES. SEALANT TO BE CLASS A AND COLOR MATCHED TO WALL AND CEILING PANELS.
5. IF NOT OTHERWISE SPECIFICALLY DETAILED WITHIN THE PACKAGE, MANUFACTURER'S STANDARD DETAILS FOR THE 2" STUDLESS AND 1/2" LINER PANEL CEILING ARE TO BE USED AT ALL INTERIOR SURFACES INCLUDING, BUT NOT LIMITED TO, CORNERS, EDGES, SOFFITS, JOINTS AND TERMINATIONS.
6. DOORS WITHIN INTERIOR WALL SYSTEM TO HAVE MINIMUM CLEARANCE FROM A PERPENDICULAR WALLFACE OF 5 1/4" DUE TO JAMB, COVING AND DOOR HANDLE CLEARANCES.

SYM	DESCRIPTION	DATE	APPR
0	ISSUED FOR CONSTRUCTION	10/28/2016	CBC

NAVFAC

REGISTERED ARCHITECT DONALD M. DYER No. 859 STATE OF MAINE
10/28/16

Colby Company engineering

A/E INFO

APPROVED
Daniel W. Greenfield
FOR COMMANDER NAVFAC

ACTIVITY
TIM FISHER
C. 2370.6 BRANCH HEAD

SATISFACTORY TO DATE 10/28/2016

DES GJN | DRW GJN | CHK DMD
PMDM PETER STOCKLESS
BRANCH MANAGER IAN BODWELL
FEAD/PMAE AMIN BAHROUR
FIRE PROTECTION PATRICK BAKAJ

DEPARTMENT OF THE NAVY
NAVAL FACILITIES ENGINEERING COMMAND
PUBLIC WORKS DEPARTMENT - MAINE
NAVAL FACILITIES ENGINEERING COMMAND ~ MID-ATLANTIC
NAVAL SHIPYARD - PORTSMOUTH, NH
PORTSMOUTH NAVAL SHIPYARD
KITTERY, ME
DRY DOCK #1 DEFUELING COMPLEX
DRE-7
ARCHITECTURAL LEGEND, ABBREVIATIONS AND GENERAL NOTES

EPROJECT NO.: 1363311
CONSTR. CONTR. NO. N40085-17-C-5002
NAVFAC DRAWING NO. 12735029
SHEET 58 OF 117
A-001 | DD1-16-1110

DRAWFORM REVISION: 10 OCTOBER 2014

10/28/2016 7:04:30 AM X:\297 PORTSMOUTH NAVAL SHIPYARD\297.005.001 - DD#1 DEFUELING COMPLEX DESIGN\DRAWINGS\DRE\TSHEET\SA-001.DWG

NOTES

1. SEE DRAWING A-001 FOR GENERAL NOTES, ABBREVIATIONS AND LEGEND.
2. THE DRAWING HIGHLIGHTS THE BASE BID OPTION.
3. REFER TO A-601 FOR PAINT SCHEDULE.

KEYED NOTES

1. 3" IMP
2. 6" (2 HOUR FIRE RATED) IMP
3. 1/4" MTL PLATE FACE, PTD
4. 1/2" LINER PANEL CEILING
5. 2" STUDLESS INTERIOR WALL SYSTEM
6. 1/4" MTL PLATE ROOF, PTD
7. EPOXY CONCRETE FLOOR
8. BASE CONCRETE CURB

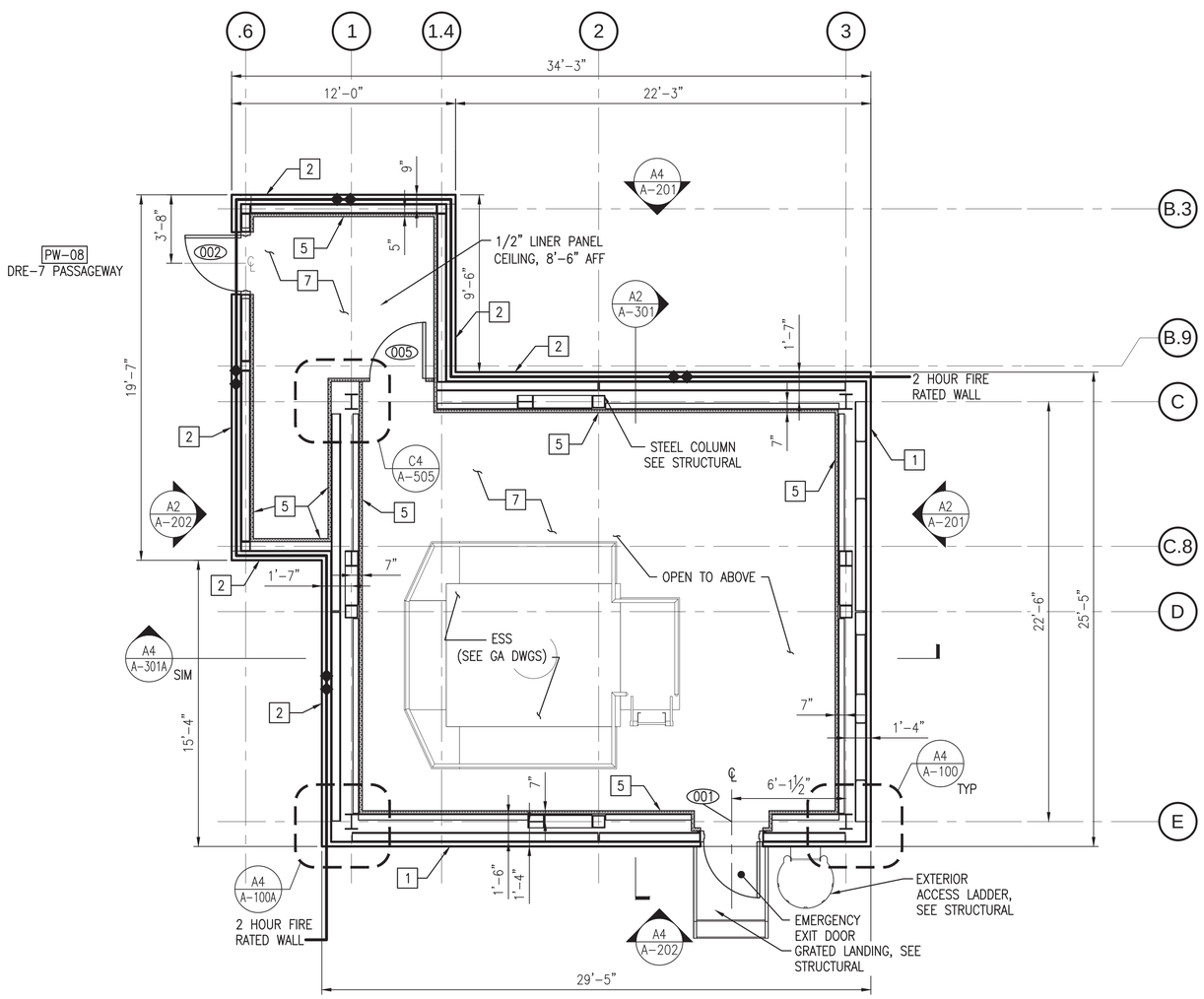

PLAN NORTH

GROUND LEVEL PLAN (EL. 0'-0") (NO STORAGE ANNEX)

SCALE: 1/4" = 1'-0"

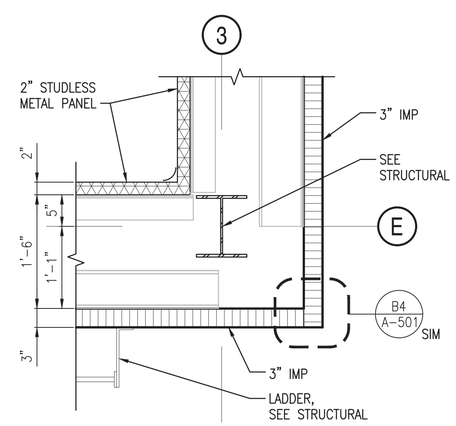

3" IMP BUILDING CORNER PLAN SECTION

SCALE: 1"=1'-0"

A-100 A4

Scale: 1" = 1'-0"

Scale: 1/4" = 1'-0"

SYM	DESCRIPTION	DATE	APPR
0	ISSUED FOR CONSTRUCTION	10/28/2016	CBC

NAVFAC

REGISTERED ARCHITECT DONALD M. DYER No. 859 STATE OF MAINE 10/28/16

Colby Company engineering

A/E INFO

APPROVED Daniel W. Greenfield FOR COMMANDER NAVFAC

ACTIVITY TIM FISHER C. 2370.6 BRANCH HEAD

SATISFACTORY TO DATE 10/28/2016

DES GJN DRW GJN CHK DMD

PMDM PETER STOCKLESS

BRANCH MANAGER IAN BODWELL

FEAD/PMAE AMIN BAHROUR

FIRE PROTECTION PATRICK BAKAJ

DEPARTMENT OF THE NAVY
NAVAL FACILITIES ENGINEERING COMMAND
PUBLIC WORKS DEPARTMENT - MAINE

NAVAL FACILITIES ENGINEERING COMMAND ~ MID-ATLANTIC
NAVAL SHIPYARD - PORTSMOUTH, NH

PORTSMOUTH NAVAL SHIPYARD
KITTERY, ME

DRY DOCK #1 DEFUELING COMPLEX
DRE-7

GROUND LEVEL PLAN (EL. 0'-0") (NO STORAGE ANNEX)

EPROJECT NO.: 1363311

CONSTR. CONTR. NO. N40085-17-C-5002

NAVFAC DRAWING NO. 12735030

SHEET 59 OF 117

A-100 DD1-16-1111

DRAWFORM REVISION: 10 OCTOBER 2014

10/28/2016 7:04:34 AM X:\297 PORTSMOUTH NAVAL SHIPYARD\297.005.001 - DD#1 DEFUELING COMPLEX DESIGN\DRAWINGS\DRE7\SHEETS\A-100.DWG

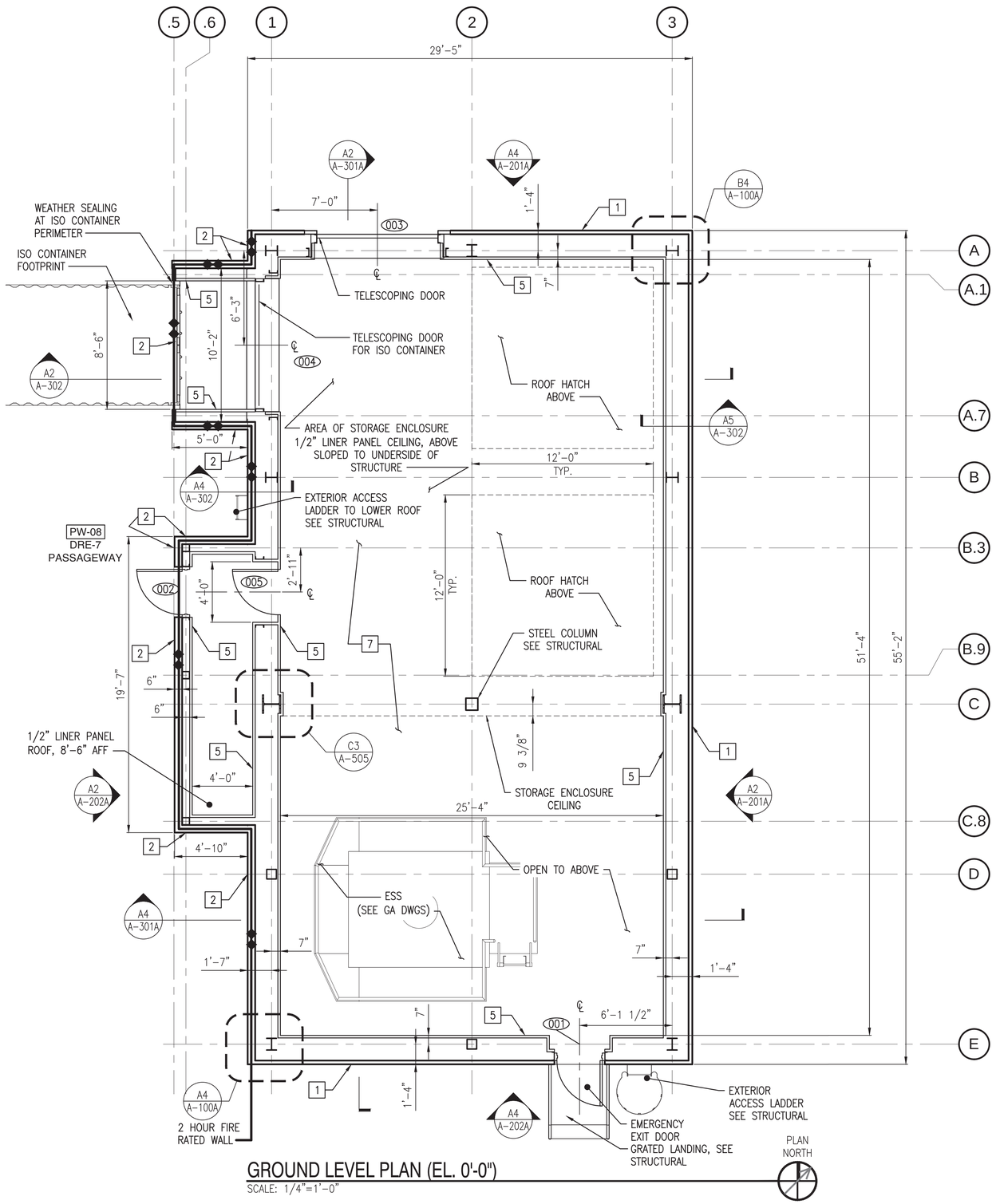

GROUND LEVEL PLAN (EL. 0'-0")

SCALE: 1/4"=1'-0"

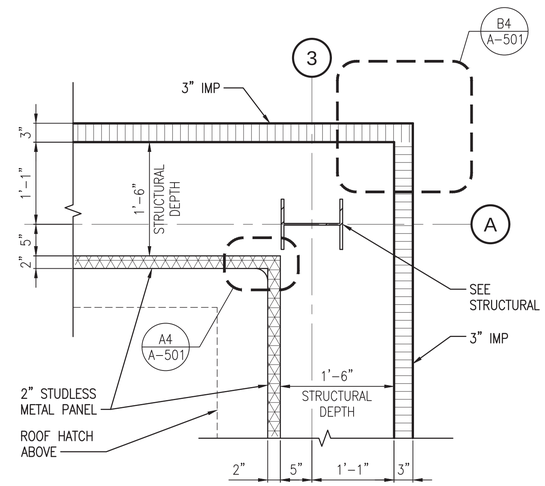

3" IMP TO 3" IMP BUILDING CORNER PLAN SECTION

SCALE: 1"=1'-0" A-100A B4

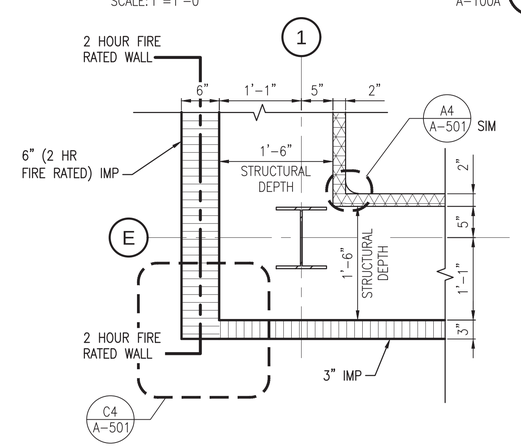

6" (2 HOUR FIRE RATED) IMP TO 3" IMP BUILDING CORNER PLAN SECTION

SCALE: 1"=1'-0" A-100, A-100A, A-101, A-101A A4

Scale: 1/4" = 1'-0"

NOTES

1. SEE DRAWING A-001 FOR GENERAL NOTES, ABBREVIATIONS AND LEGEND.
2. REFER TO A-601 FOR PAINT SCHEDULE.

KEYED NOTES

1. 3" IMP
2. 6" (2 HOUR FIRE RATED) IMP
3. 1/4" MTL PLATE FACE, PTD
4. 1/2" LINER PANEL CEILING
5. 2" STUDLESS INTERIOR WALL SYSTEM
6. 1/4" MTL PLATE ROOF, PTD
7. EPOXY CONCRETE FLOOR
8. BASE CONCRETE CURB

LEGEND

2 HOUR FIRE RATED WALL SEE A-202A FOR HEIGHT LIMITS

SYM	DESCRIPTION	DATE	APPR
0	ISSUED FOR CONSTRUCTION	10/28/2016	CBC

NAVFAC

REGISTERED ARCHITECT DONALD M. DYER No. 859 STATE OF MAINE 10/28/16

Colby Company engineering

APPROVED Daniel W. Greenfield FOR COMMANDER NAVFAC

ACTIVITY: TIM FISHER C. 2370.6 BRANCH HEAD

SATISFACTORY TO DATE 10/28/2016

DES GJN DRW GJN CHK DMD

PMDM: PETER STOCKLESS

BRANCH MANAGER: IAN BODWELL

FEAD/PM&E: AMIN BAHROUR

FIRE PROTECTION: PATRICK BAKAJ

DEPARTMENT OF THE NAVY
NAVAL FACILITIES ENGINEERING COMMAND
PUBLIC WORKS DEPARTMENT - MAINE
NAVAL FACILITIES ENGINEERING COMMAND – MID-ATLANTIC
NAVAL SHIPYARD - PORTSMOUTH, NH
PORTSMOUTH NAVAL SHIPYARD
KITTERY, ME
DRY DOCK #1 DEFUELING COMPLEX
DRE-7
GROUND LEVEL PLAN (EL. 0'-0")

EPROJECT NO.: 1363311

CONSTR. CONTR. NO. N40085-17-C-5002

NAVFAC DRAWING NO. 12735031

SHEET 60 OF 117

A-100A DD1-16-1112

DRAWFORM REVISION: 10 OCTOBER 2014

10/28/2016 7:04:39 AM X:\297 PORTSMOUTH NAVAL SHIPYARD\297.005.001 - DD#1 DEFUELING COMPLEX DESIGN\DRAWINGS\DRE7\SHEETS\A-100A.DWG

NOTES

1. SEE DRAWING A–001 FOR GENERAL NOTES, ABBREVIATIONS AND LEGEND.
2. THE DRAWING HIGHLIGHTS THE BASE BID OPTION.
3. REFER TO A–601 FOR PAINT SCHEDULE.

KEYED NOTES

1. 3" IMP
2. 6" (2 HOUR FIRE RATED) IMP
3. 1/4" MTL PLATE FACE, PTD
4. 1/2" LINER PANEL CEILING
5. 2" STUDLESS INTERIOR WALL SYSTEM
6. 1/4" MTL PLATE ROOF, PTD
7. EPOXY CONCRETE FLOOR
8. BASE CONCRETE CURB

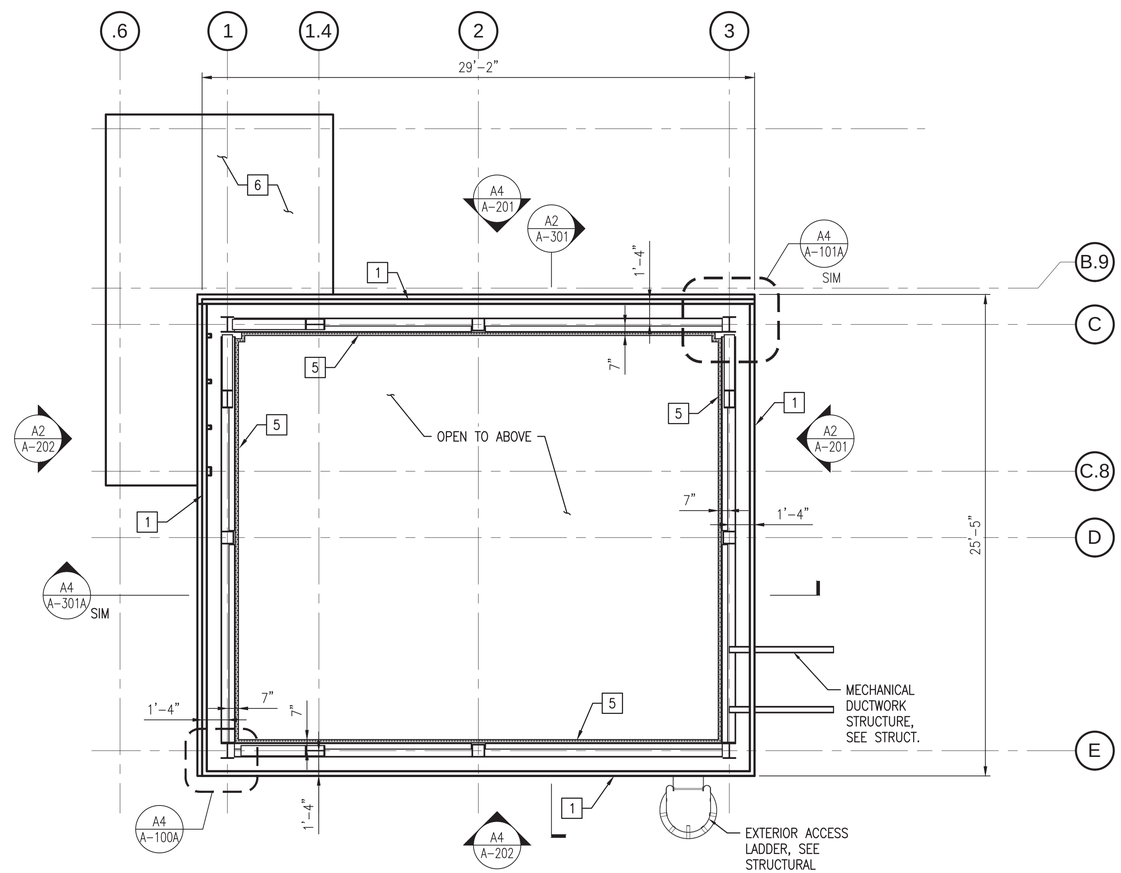

LOWER ROOF PLAN (EL. 0'-0") (NO STORAGE ANNEX)

SCALE: 1/4" = 1'–0"

0 2' 4' 8'
Scale: 1/4" = 1'–0"

SYM	DESCRIPTION	DATE	APPR
0	ISSUED FOR CONSTRUCTION	10/28/2016	CBC

REGISTERED ARCHITECT DONALD M. DYER No. 859 STATE OF MAINE 10/28/16

Colby Company engineering

A/E INFO

APPROVED Daniel W. Greenfield
FOR COMMANDER NAVFAC

ACTIVITY: TIM FISHER C. 2370.6 BRANCH HEAD

SATISFACTORY TO DATE 10/28/2016

DES GJN DRW GJN CHK DMD

PM/CM	PETER STOCKLESS
BRANCH MANAGER	IAN BODWELL
FEAD/PM/E	AMIN BAHROUR
FIRE PROTECTION	PATRICK BAKAJ

DEPARTMENT OF THE NAVY
NAVAL FACILITIES ENGINEERING COMMAND
PUBLIC WORKS DEPARTMENT - MAINE

NAVAL FACILITIES ENGINEERING COMMAND ~ MID-ATLANTIC
NAVAL SHIPYARD - PORTSMOUTH, NH

PORTSMOUTH NAVAL SHIPYARD
KITTERY, ME

DRY DOCK #1 DEFUELING COMPLEX
DRE-7

LOWER ROOF PLAN (EL. 0'–0") (NO STORAGE ANNEX)

EPROJECT NO.: 1363311

CONSTR. CONTR. NO. N40085-17-C-5002

NAVFAC DRAWING NO. 12735032

SHEET 61 OF 117

A-101 | DD1-16-1113

DRAWFORM REVISION: 10 OCTOBER 2014

10/28/2016 7:04:43 AM X:\297 PORTSMOUTH NAVAL SHIPYARD\297.005.001 - DD#1 DEFUELING COMPLEX DESIGN\DRAWINGS\DRE7\SHEETS\A-101.DWG

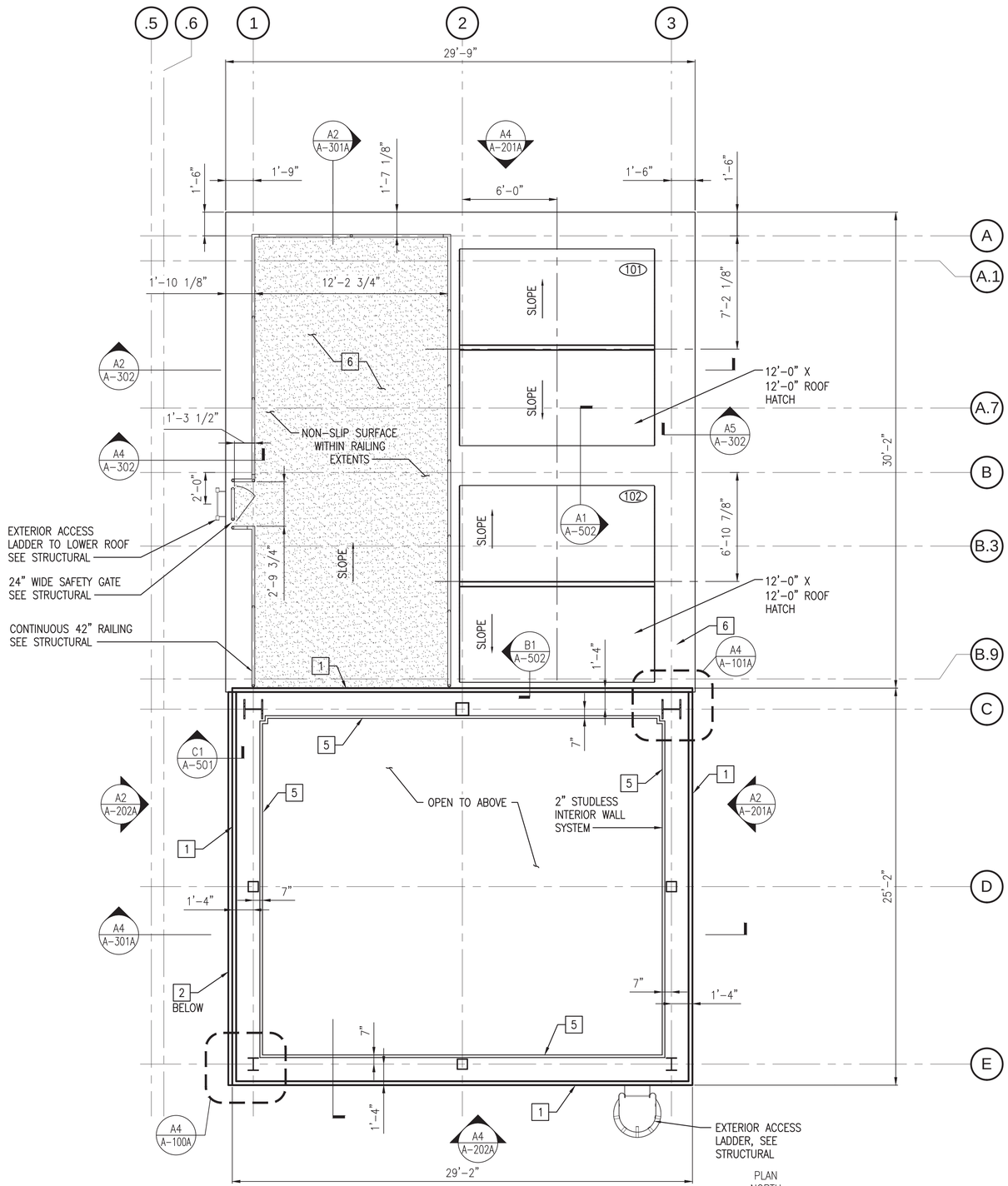

LOWER ROOF PLAN (EL. 15'-4 1/2")

SCALE: 1/4"=1'-0"

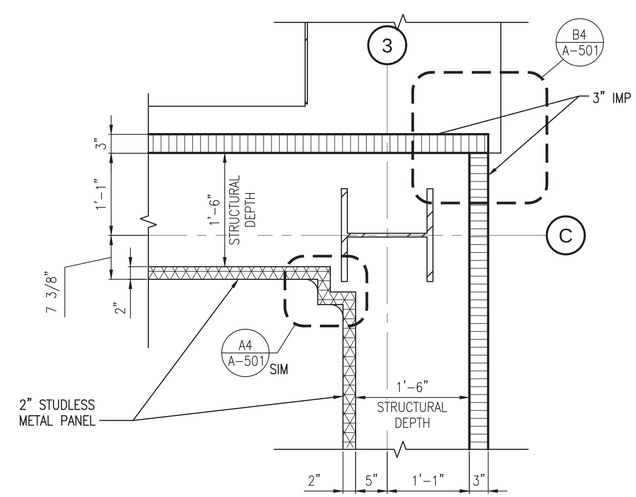

3" IMP TO 3" IMP BUILDING CORNER PLAN SECTION

SCALE: 1"=1'-0"

A-101, A-101A, A-102 A4

Scale: 1" = 1'-0"

Scale: 1/4" = 1'-0"

NOTES

1. SEE DRAWING A-001 FOR GENERAL NOTES, ABBREVIATIONS AND LEGEND.
2. REFER TO A-601 FOR PAINT SCHEDULE.

KEYED NOTES

1. 3" IMP
2. 6" (2 HOUR FIRE RATED) IMP
3. 1/4" MTL PLATE FACE, PTD
4. 1/2" LINER PANEL CEILING
5. 2" STUDLESS INTERIOR WALL SYSTEM
6. 1/4" MTL PLATE ROOF, PTD
7. EPOXY CONCRETE FLOOR
8. BASE CONCRETE CURB

SYM	DESCRIPTION	DATE	APPR
0	ISSUED FOR CONSTRUCTION	10/28/2016	CBC

NAVFAC

REGISTERED ARCHITECT DONALD M. DYER No. 859 STATE OF MAINE 10/28/16

Colby Company engineering

A/E INFO

APPROVED Daniel W. Greenfield FOR COMMANDER NAVFAC

ACTIVITY: TIM FISHER C. 2370.6 BRANCH HEAD

SATISFACTORY TO DATE 10/28/2016

DES GJN DRW GJN CHK DMD

PMDM PETER STOCKLESS

BRANCH MANAGER IAN BODWELL

FEAD/PM&E AMIN BAHROUR

FIRE PROTECTION PATRICK BAKAJ

DEPARTMENT OF THE NAVY
NAVAL FACILITIES ENGINEERING COMMAND
PUBLIC WORKS DEPARTMENT - MAINE

NAVAL FACILITIES ENGINEERING COMMAND ~ MID-ATLANTIC
NAVAL SHIPYARD - PORTSMOUTH, NH

PORTSMOUTH NAVAL SHIPYARD
KITTERY, ME

DRY DOCK #1 DEFUELING COMPLEX DRE-7

LOWER ROOF PLAN (EL. 15'-4 1/2")

EPROJECT NO.: 1363311

CONSTR. CONTR. NO. N40085-17-C-5002

NAVFAC DRAWING NO. 12735033

SHEET 62 OF 117

A-101A DD1-16-1114

DRAWFORM REVISION: 10 OCTOBER 2014

10/28/2016 7:04:48 AM X:\297 PORTSMOUTH NAVAL SHIPYARD\297.005.001 - DD#1 DEFUELING COMPLEX DESIGN\DRAWINGS\DRE7\SHEETS\A-101A.DWG

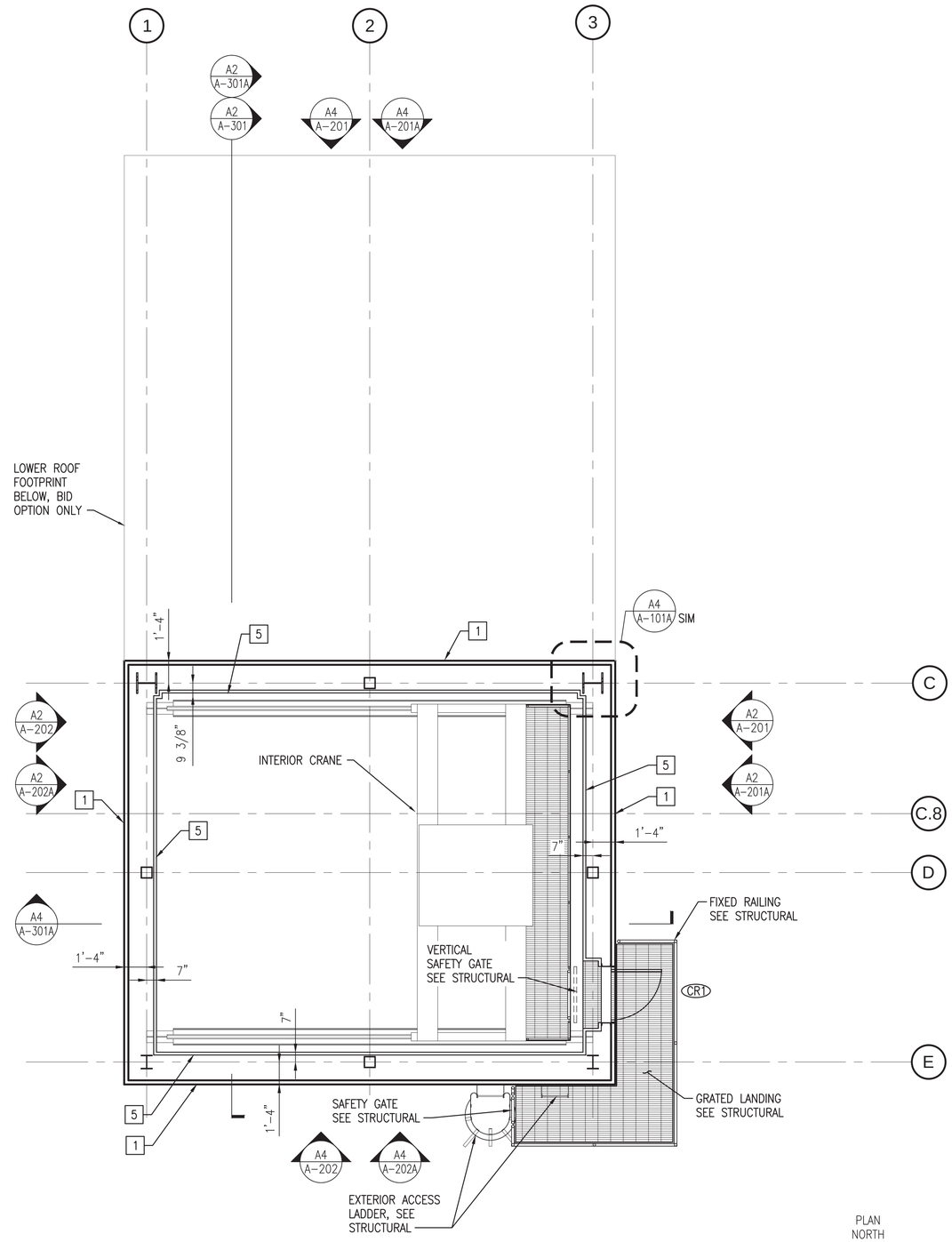

CRANE LEVEL PLAN (EL. 48'-8 5/8")

SCALE: 1/4"=1'-0"

NOTES

1. SEE DRAWING A-001 FOR GENERAL NOTES, ABBREVIATIONS AND LEGEND.
2. ANY AND ALL CRANE INFORMATION IS FOR INFORMATIONAL PURPOSES ONLY. DETAILS TO BE PROVIDED BY CRANE MANUFACTURER AND SHALL BE COORDINATED WITH THE ENCLOSURE CONTRACTORS.
3. ALL GRATING DIMENSIONS TO BE FOUND IN STRUCTURAL.
4. REFER TO A-601 FOR PAINT SCHEDULE.

KEYED NOTES

1. 3" IMP
2. 6" (2 HOUR FIRE RATED) IMP
3. 1/4" MTL PLATE FACE, PTD
4. 1/2" LINER PANEL CEILING
5. 2" STUDLESS INTERIOR WALL SYSTEM
6. 1/4" MTL PLATE ROOF, PTD
7. EPOXY CONCRETE FLOOR
8. BASE CONCRETE CURB

SYM	DESCRIPTION	DATE	APPR
0	ISSUED FOR CONSTRUCTION	10/28/2016	CBC

NAVFAC

REGISTERED ARCHITECT
DONALD M. DYER
No. 859
STATE OF MAINE
10/28/16

Colby Company engineering

A/E INFO

APPROVED
Daniel W. Greenfield
FOR COMMANDER NAVFAC

ACTIVITY
TIM FISHER
C. 2370.6 BRANCH HEAD

SATISFACTORY TO DATE 10/28/2016

DES	GJN	DRW	GJN	CHK	DMD

PM/DM PETER STOCKLESS
BRANCH MANAGER IAN BODWELL
FEA/PM&E AMIN BAHROUR
FIRE PROTECTION PATRICK BAKAJ

DEPARTMENT OF THE NAVY
NAVAL FACILITIES ENGINEERING COMMAND
PUBLIC WORKS DEPARTMENT - MAINE
NAVAL FACILITIES ENGINEERING COMMAND ~ MID-ATLANTIC
NAVAL SHIPYARD - PORTSMOUTH NH
PORTSMOUTH NAVAL SHIPYARD
KITTERY, ME
DRY DOCK #1 DEFUELING COMPLEX
DRE-7
CRANE LEVEL PLAN (EL. 48'-8 5/8")

EPROJECT NO.: 1363311
CONSTR. CONTR. NO. N40085-17-C-5002
NAVFAC DRAWING NO. 12735034
SHEET 63 OF 117

A-102 | DD1-16-1115

Scale: 1/4" = 1'-0"

DRAWFORM REVISION: 10 OCTOBER 2014

10/28/2016 7:04:52 AM X:\297 PORTSMOUTH NAVAL SHIPYARD\297.005.001 - DD#1 DEFUELING COMPLEX DESIGN\DRAWINGS\DRE7\SHEETS\A-102.DWG

KEYED NOTES

1. 3" IMP
2. 6" (2 HOUR FIRE RATED) IMP
3. 1/4" MTL PLATE FACE, PTD
4. 1/2" LINER PANEL CEILING
5. 2" STUDLESS INTERIOR WALL SYSTEM
6. 1/4" MTL PLATE ROOF, PTD
7. EPOXY CONCRETE FLOOR
8. BASE CONCRETE CURB

NOTES

1. SEE DRAWING A-001 FOR GENERAL NOTES, ABBREVIATIONS AND LEGEND.
2. ANY AND ALL CRANE INFORMATION IS FOR INFORMATIONAL PURPOSES ONLY. DETAILS TO BE PROVIDED BY CRANE MANUFACTURER AND SHALL BE COORDINATED WITH THE ENCLOSURE CONTRACTORS.
3. ALL GRATING DIMENSIONS TO BE FOUND IN STRUCTURAL.
4. REFER TO A-601 FOR PAINT SCHEDULE.

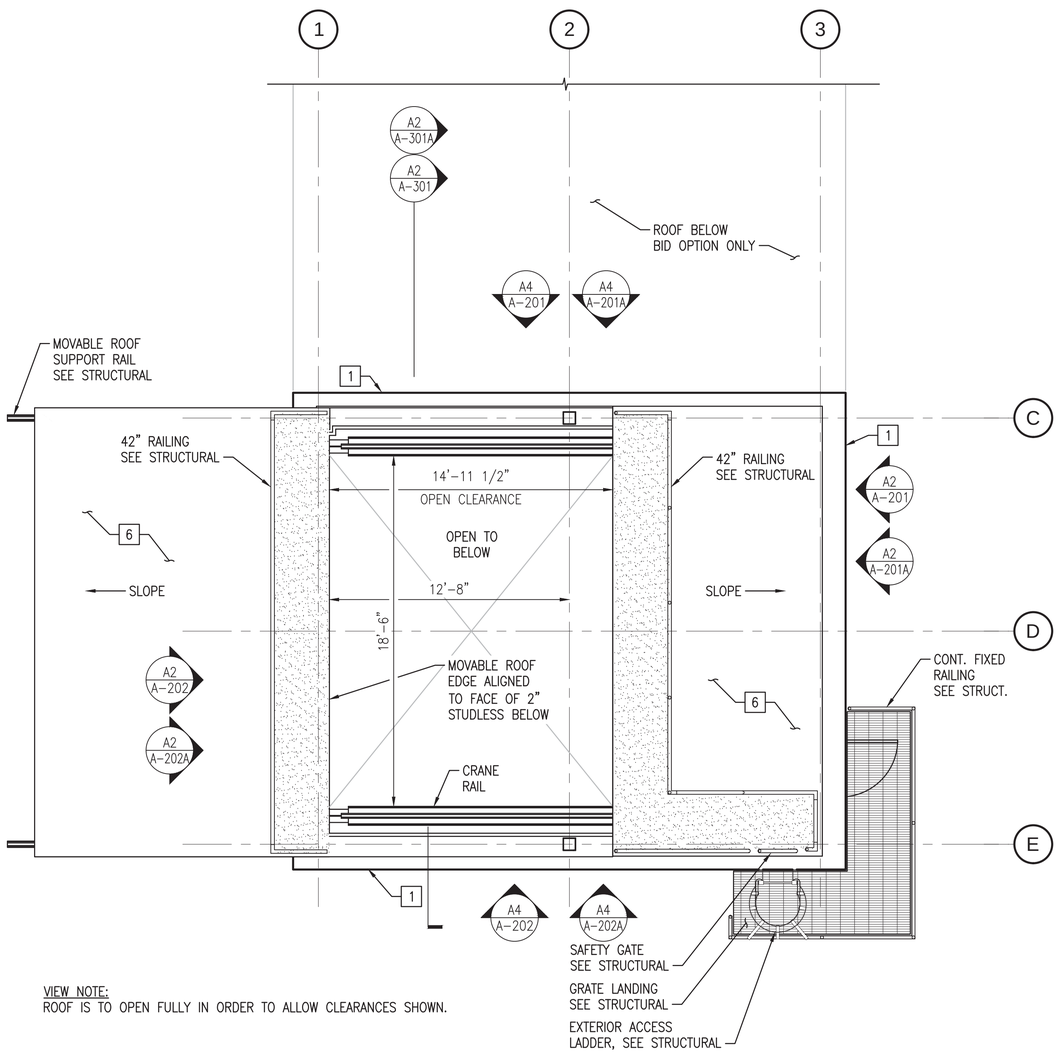

VIEW NOTE:
ROOF IS TO OPEN FULLY IN ORDER TO ALLOW CLEARANCES SHOWN.

ROOF PLAN (OPEN) LEVEL 5, EL. 56'-4"

SCALE: 1/4"=1'-0"

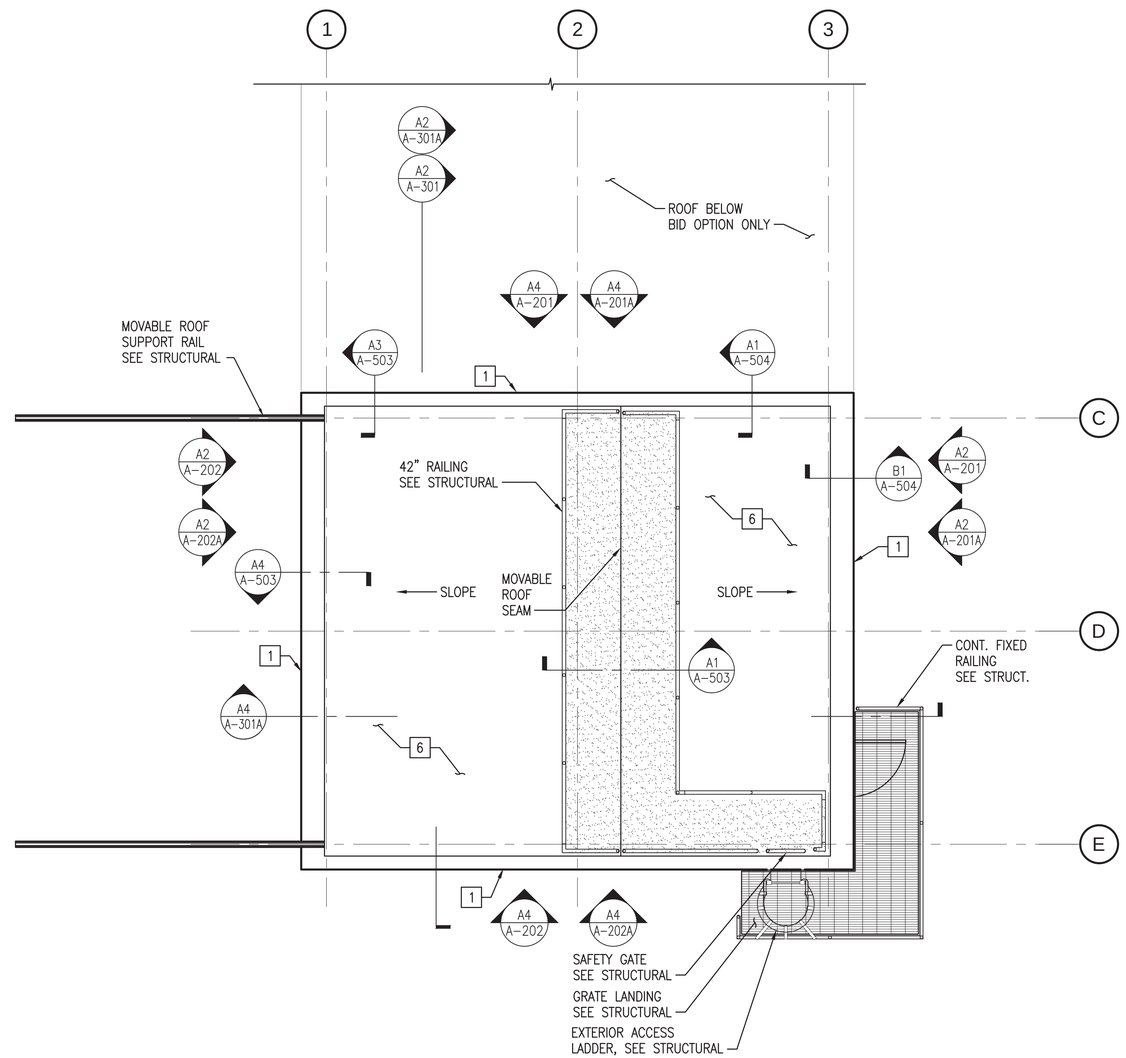

ROOF PLAN (CLOSED) LEVEL 5, EL. 56'-4"

SCALE: 1/4"=1'-0"

SYM	DESCRIPTION	DATE	APPR
0	ISSUED FOR CONSTRUCTION	10/28/2016	CBC

NAVFAC

REGISTERED ARCHITECT DONALD M. DYER No. 859 STATE OF MAINE 10/28/16

Colby Company engineering

A/E INFO

APPROVED
Daniel W. Greenfield
FOR COMMANDER NAVFAC

ACTIVITY
TIM FISHER
C. 2370.6 BRANCH HEAD

SATISFACTORY TO DATE 10/28/2016

DES	GJN	DRW	GJN	CHK	DMD

PMDM PETER STOCKLESS
BRANCH MANAGER IAN BODWELL
FEAD/PMAE AMIN BAHROUR
FIRE PROTECTION PATRICK BAKAJ

DEPARTMENT OF THE NAVY
NAVAL FACILITIES ENGINEERING COMMAND
PUBLIC WORKS DEPARTMENT - MAINE

NAVAL FACILITIES ENGINEERING COMMAND ~ MID-ATLANTIC
NAVAL SHIPYARD - PORTSMOUTH, NH

PORTSMOUTH NAVAL SHIPYARD
KITTERY, ME

DRY DOCK #1 DEFUELING COMPLEX
DRE-7

UPPER ROOF PLAN

EPROJECT NO.: 1363311

CONSTR. CONTR. NO.
N40085-17-C-5002

NAVFAC DRAWING NO.
12735035

SHEET 64 OF 117

A-103 | DD1-16-1116

DRAWFORM REVISION: 10 OCTOBER 2014

10/28/2016 7:04:56 AM X:\297 PORTSMOUTH NAVAL SHIPYARD\297.005.001 - DD#1 DEFUELING COMPLEX DESIGN\DRAWINGS\DRE7\SHEETS\A-103.DWG

NOTES

1. SEE DRAWING A-001 FOR GENERAL NOTES, ABBREVIATIONS AND LEGEND.
2. RAILINGS, LADDERS AND GATES SHOWN FOR CONTEXT ONLY. FOR ACTUAL DIMENSIONS AND GEOMETRY SEE STRUCTURAL DETAIL DRAWINGS.

KEYED NOTES

1. 3" IMP
2. 6" (2 HOUR FIRE RATED) IMP
3. 1/4" MTL PLATE FACE, PTD
4. 1/2" LINER PANEL CEILING
5. 2" STUDLESS INTERIOR WALL SYSTEM
6. 1/4" MTL PLATE ROOF, PTD
7. EPOXY CONCRETE FLOOR
8. BASE CONCRETE CURB

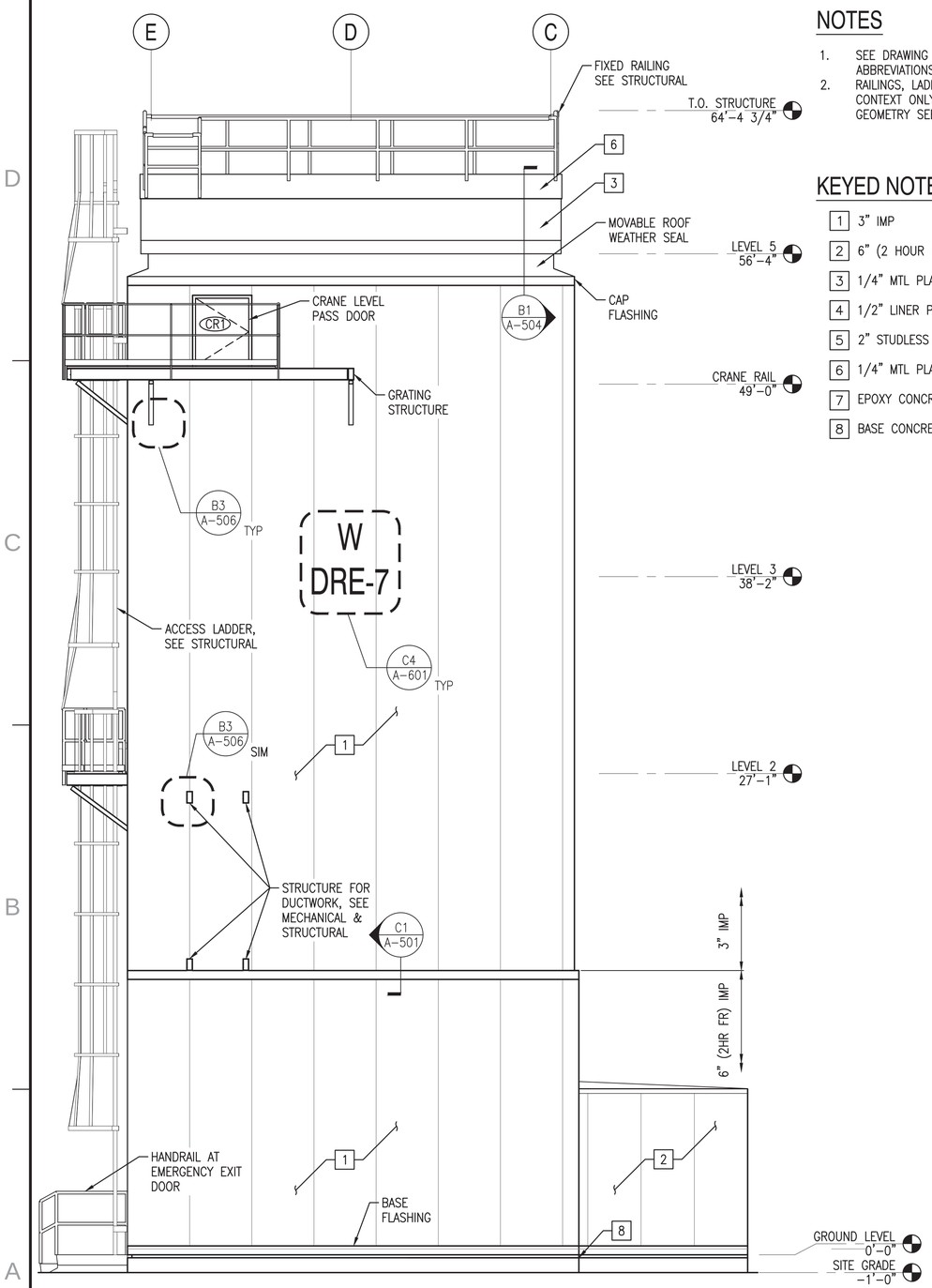

EAST ELEVATION

SCALE: 1/4"=1'-0"

A-100, A-101, A-102, A-103 (A2)

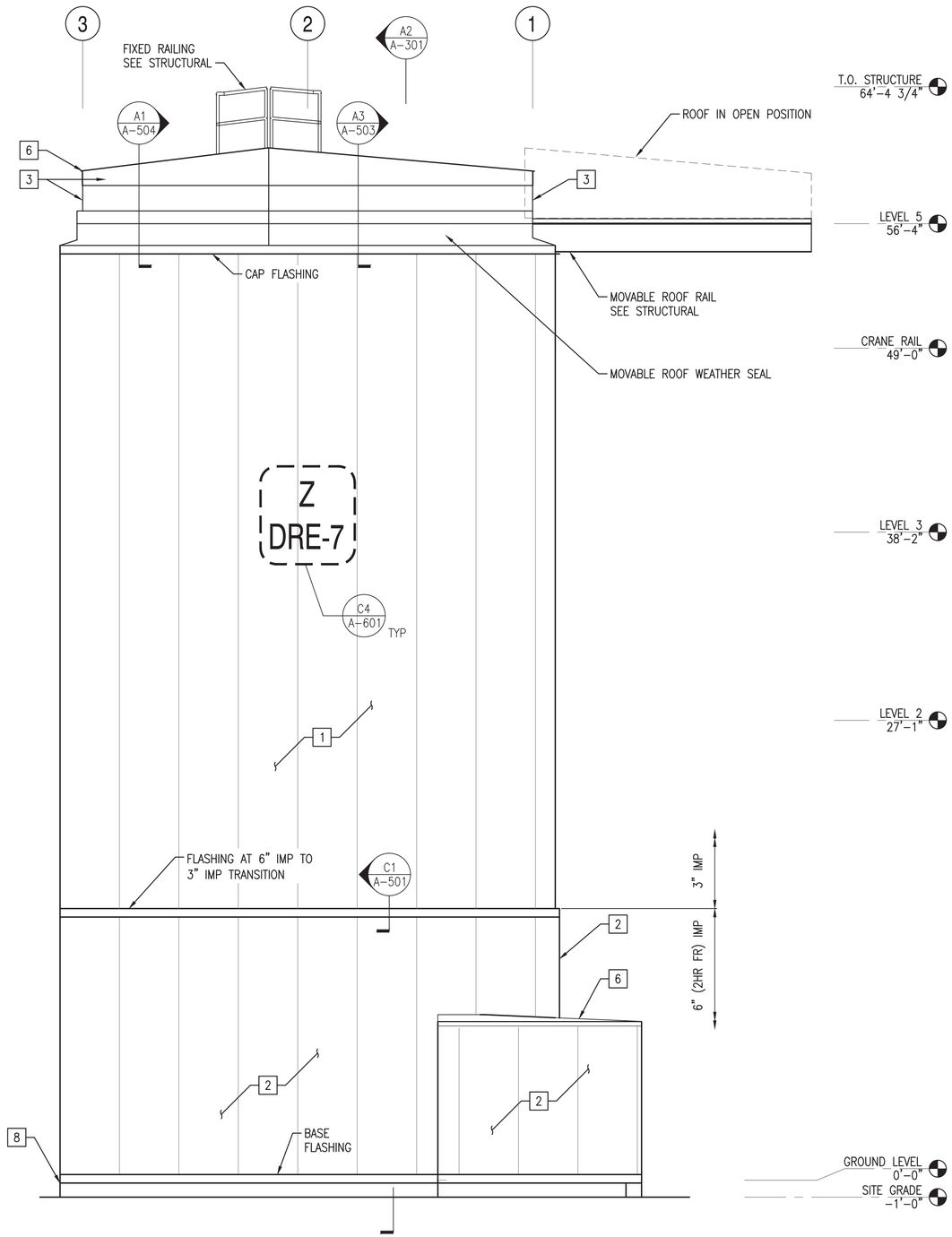

NORTH ELEVATION

SCALE: 1/4"=1'-0"

A-100, A-101, A-102, A-103 (A4)

0 2' 4' 8'
Scale: 1/4" = 1'-0"

SYM	DESCRIPTION	DATE	APPR
0	ISSUED FOR CONSTRUCTION	10/28/2016	CBC

NAVFAC

REGISTERED ARCHITECT DONALD M. DYER No. 859 STATE OF MAINE 10/28/16

Colby Company engineering

A/E INFO

APPROVED Donald W. Greenfield
FOR COMMANDER NAVFAC

ACTIVITY: TIM FISHER C. 2370.6 BRANCH HEAD

SATISFACTORY TO DATE 10/28/2016

DES	GJN	DRW	GJN	CHK	DMD

PM/DM	PETER STOCKLESS
BRANCH MANAGER	IAN BODWELL
FEAD/PM&E	AMIN BAHROUR
FIRE PROTECTION	PATRICK BAKAJ

DEPARTMENT OF THE NAVY
NAVAL FACILITIES ENGINEERING COMMAND
PUBLIC WORKS DEPARTMENT - MAINE

NAVAL FACILITIES ENGINEERING COMMAND ~ MID-ATLANTIC
NAVAL SHIPYARD - PORTSMOUTH, NH

PORTSMOUTH NAVAL SHIPYARD
KITTERY, ME

DRY DOCK #1 DEFUELING COMPLEX DRE-7

BUILDING ELEVATIONS (NO STORAGE ANNEX)

EPROJECT NO.: 1363311

CONSTR. CONTR. NO. N40085-17-C-5002

NAVFAC DRAWING NO. 12735036

SHEET 65 OF 117

A-201 | DD1-16-1117

DRAWFORM REVISION: 10 OCTOBER 2014

10/28/2016 7:05:01 AM X:\297 PORTSMOUTH NAVAL SHIPYARD\2297.005.001 - DD#1 DEFUELING COMPLEX DESIGN\DRAWINGS\DRE7\SHEETS\A-201.DWG

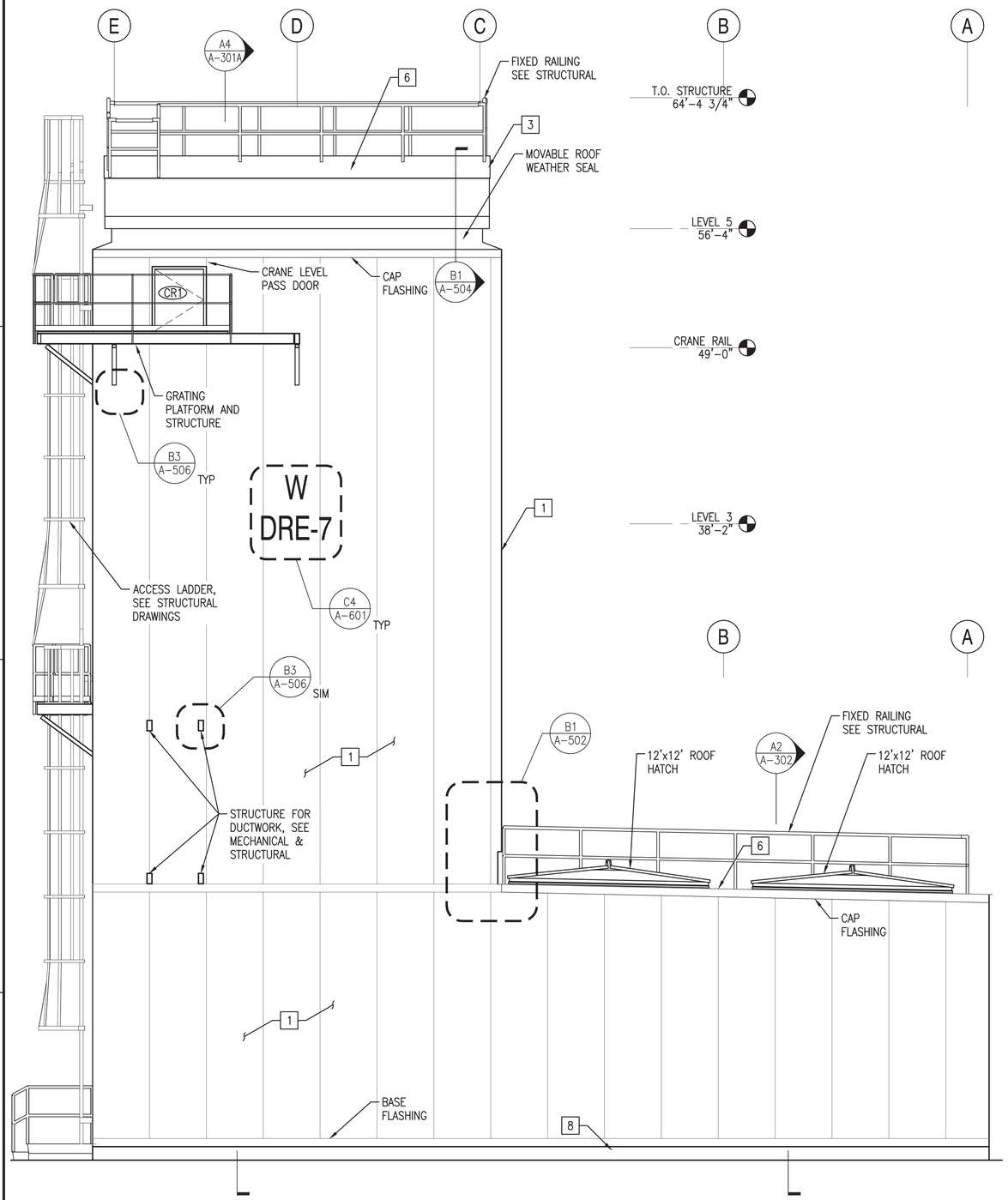

EAST ELEVATION

SCALE: 1/4"=1'-0"

A-100A, A-101A, A-102, A-103 (A2)

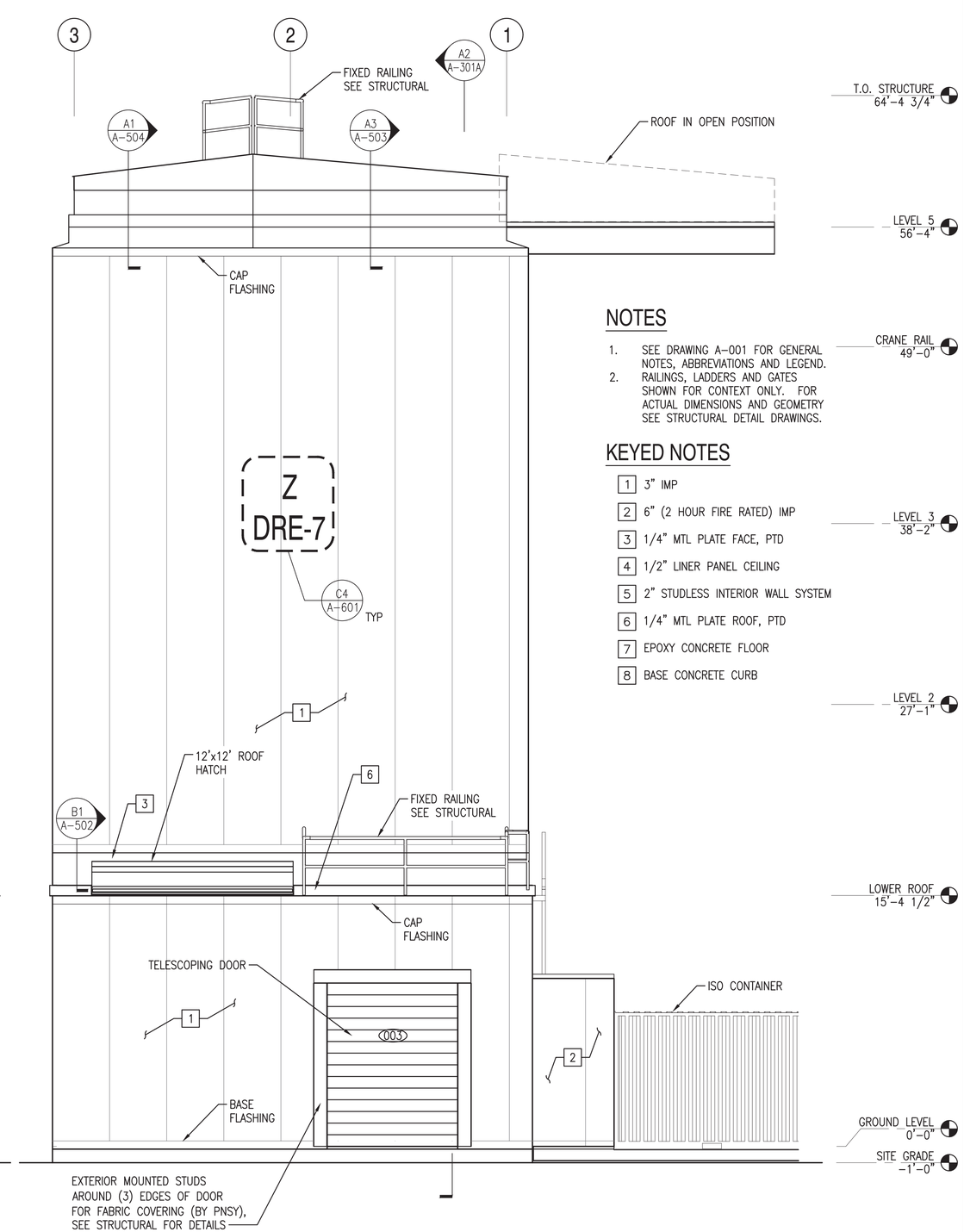

NOTES

1. SEE DRAWING A-001 FOR GENERAL NOTES, ABBREVIATIONS AND LEGEND.
2. RAILINGS, LADDERS AND GATES SHOWN FOR CONTEXT ONLY. FOR ACTUAL DIMENSIONS AND GEOMETRY SEE STRUCTURAL DETAIL DRAWINGS.

KEYED NOTES

1. 3" IMP
2. 6" (2 HOUR FIRE RATED) IMP
3. 1/4" MTL PLATE FACE, PTD
4. 1/2" LINER PANEL CEILING
5. 2" STUDLESS INTERIOR WALL SYSTEM
6. 1/4" MTL PLATE ROOF, PTD
7. EPOXY CONCRETE FLOOR
8. BASE CONCRETE CURB

NORTH ELEVATION

SCALE: 1/4"=1'-0"

A-100A, A-101A, A-102, A-103 (A4)

0 2' 4' 8'
Scale: 1/4" = 1'-0"

SYM	DESCRIPTION	DATE	APPR
0	ISSUED FOR CONSTRUCTION	10/28/2016	CBC

NAVFAC

REGISTERED ARCHITECT
DONALD M. DYER
No. 859
STATE OF MAINE
10/28/16

Colby Company engineering
A/E INFO

APPROVED
Daniel W. Greenfield
FOR COMMANDER NAVFAC

ACTIVITY
TIM FISHER
C. 2370.6 BRANCH HEAD

SATISFACTORY TO DATE 10/28/2016

DES GJN DRW GJN CHK DMD

PM/CM	PETER STOCKLESS
BRANCH MANAGER	IAN BODWELL
FEAD/PM/E	AMIN BAHROUR
FIRE PROTECTION	PATRICK BAKAJ

DEPARTMENT OF THE NAVY
NAVAL FACILITIES ENGINEERING COMMAND
PUBLIC WORKS DEPARTMENT - MAINE

NAVAL FACILITIES ENGINEERING COMMAND ~ MID-ATLANTIC
NAVAL SHIPYARD - PORTSMOUTH, NH

PORTSMOUTH NAVAL SHIPYARD
KITTERY, ME

DRY DOCK #1 DEFUELING COMPLEX
DRE-7

BUILDING ELEVATIONS

EPROJECT NO.: 1363311

CONSTR. CONTR. NO.
N40085-17-C-5002

NAVFAC DRAWING NO.
12735037

SHEET 66 OF 117

A-201A | DD1-16-1118

DRAWFORM REVISION: 10 OCTOBER 2014

10/28/2016 7:05:06 AM X:\297 PORTSMOUTH NAVAL SHIPYARD\297.005.001 - DD#1 DEFUELING COMPLEX DESIGN\DRAWINGS\DRE7\SHEETS\A-201A.DWG

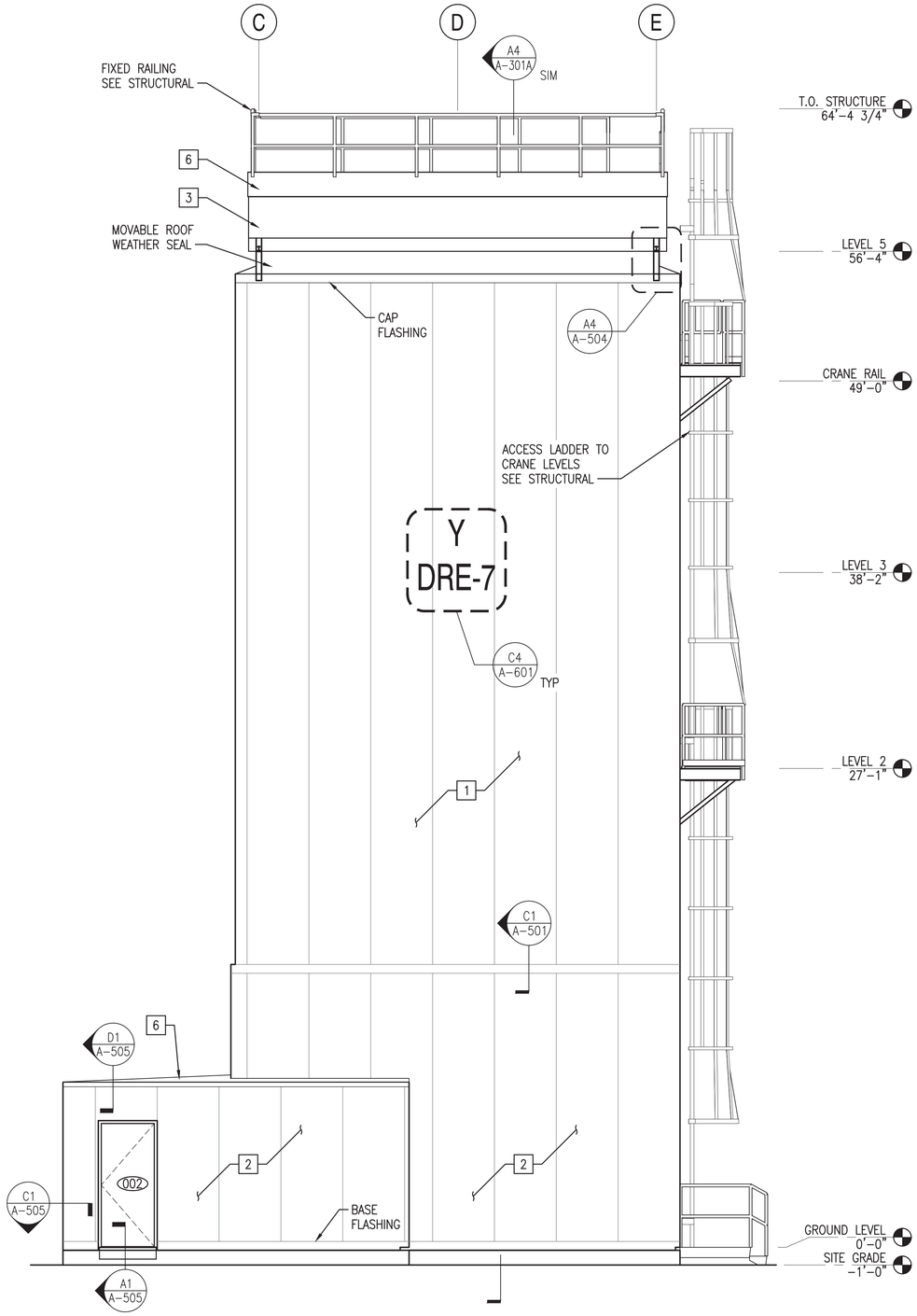

WEST ELEVATION

SCALE: 1/4"=1'-0"

A-100, A-101, A-102, A-103 (A2)

NOTES

1. SEE DRAWING A-001 FOR GENERAL NOTES, ABBREVIATIONS AND LEGEND.
2. RAILINGS, LADDERS AND GATES SHOWN FOR CONTEXT ONLY. FOR ACTUAL DIMENSIONS AND GEOMETRY SEE STRUCTURAL DETAIL DRAWINGS.

KEYED NOTES

1. 3" IMP
2. 6" (2 HOUR FIRE RATED) IMP
3. 1/4" MTL PLATE FACE, PTD
4. 1/2" LINER PANEL CEILING
5. 2" STUDLESS INTERIOR WALL SYSTEM
6. 1/4" MTL PLATE ROOF, PTD
7. EPOXY CONCRETE FLOOR
8. BASE CONCRETE CURB

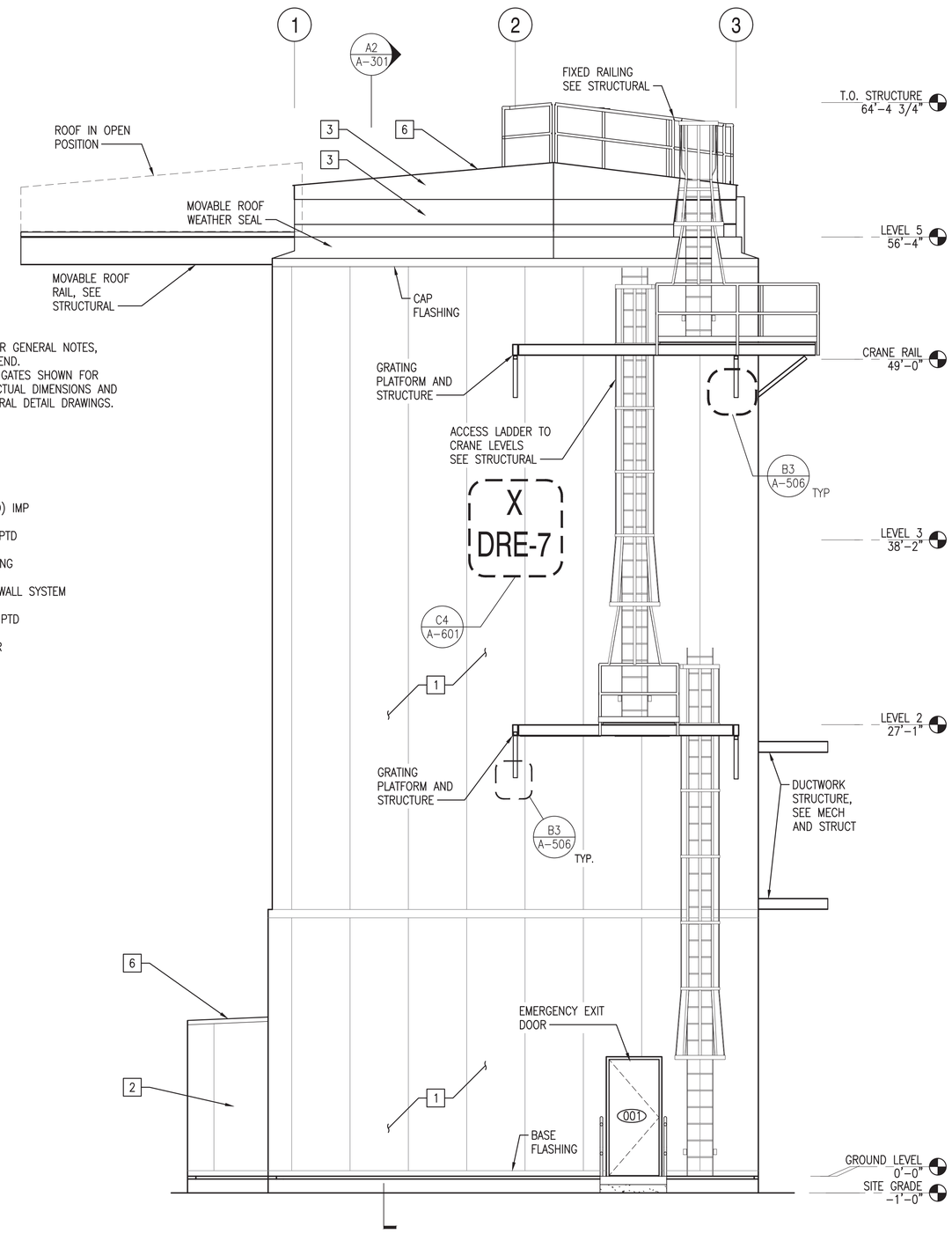

SOUTH ELEVATION

SCALE: 1/4"=1'-0"

A-100, A-101, A-102, A-103 (A4)

0 2' 4' 8'
Scale: 1/4" = 1'-0"

SYM	DESCRIPTION	DATE	APPR
0	ISSUED FOR CONSTRUCTION	10/28/2016	CBC

NAVFAC

REGISTERED ARCHITECT
DONALD M. DYER
No. 859
STATE OF MAINE
10/28/16

Colby Company engineering

A/E INFO

APPROVED
Daniel W. Greenfield
FOR COMMANDER NAVFAC

ACTIVITY
TIM FISHER
C. 2370.6 BRANCH HEAD

SATISFACTORY TO DATE 10/28/2016

DES GJN DRW GJN CHK DMD

PMDM PETER STOCKLESS

BRANCH MANAGER IAN BODWELL

FEAD/PM&E AMIN BAHROUR

FIRE PROTECTION PATRICK BAKAJ

DEPARTMENT OF THE NAVY
PUBLIC WORKS DEPARTMENT - MAINE

NAVAL FACILITIES ENGINEERING COMMAND
NAVAL FACILITIES ENGINEERING COMMAND ~ MID-ATLANTIC
NAVAL SHIPYARD - PORTSMOUTH, NH

PORTSMOUTH NAVAL SHIPYARD
KITTERY, ME
DRY DOCK #1 DEFUELING COMPLEX
DRE-7

BUILDING ELEVATIONS (NO STORAGE ANNEX)

EPROJECT NO.: 1363311

CONSTR. CONTR. NO.
N40085-17-C-5002

NAVFAC DRAWING NO.
12735038

SHEET 67 OF 117

A-202 | DD1-16-1119

DRAWFORM REVISION: 10 OCTOBER 2014

10/28/2016 7:05:11 AM X:\297 PORTSMOUTH NAVAL SHIPYARD\297.005.001 - DD#1 DEFUELING COMPLEX DESIGN\DRAWINGS\DRE7\SHEETS\A-202.DWG

NOTES

1. SEE DRAWING A-001 FOR GENERAL NOTES, ABBREVIATIONS AND LEGEND.
2. RAILINGS, LADDERS AND GATES SHOWN FOR CONTEXT ONLY. FOR ACTUAL DIMENSIONS AND GEOMETRY SEE STRUCTURAL DETAIL DRAWINGS.

KEYED NOTES

1. 3" IMP
2. 6" (2 HOUR FIRE RATED) IMP
3. 1/4" MTL PLATE FACE, PTD
4. 1/2" LINER PANEL CEILING
5. 2" STUDLESS INTERIOR WALL SYSTEM
6. 1/4" MTL PLATE ROOF, PTD
7. EPOXY CONCRETE FLOOR
8. BASE CONCRETE CURB

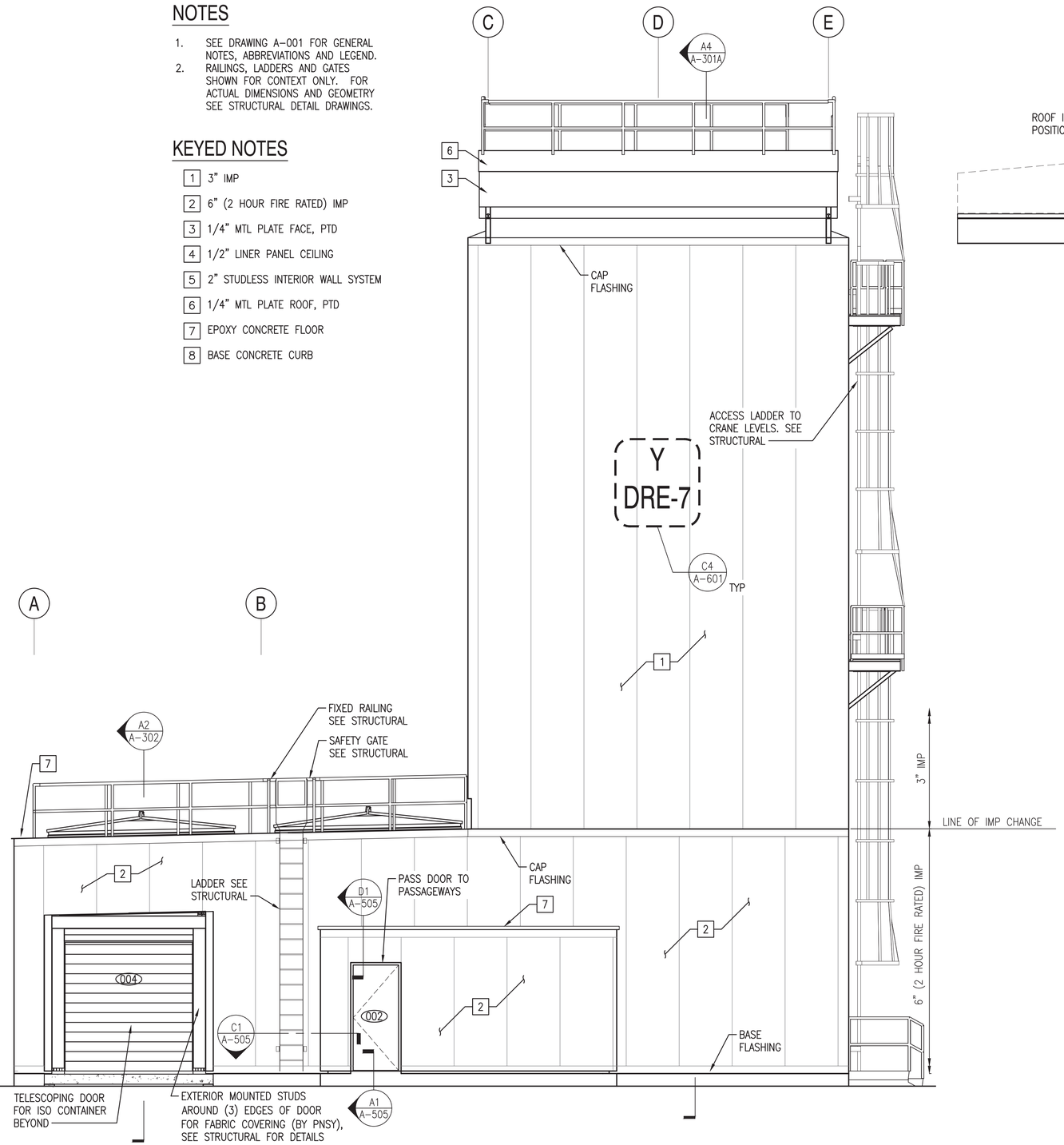

WEST ELEVATION

SCALE: 1/4"=1'-0"

A-100A, A-101A, A-102, A-103 (A2)

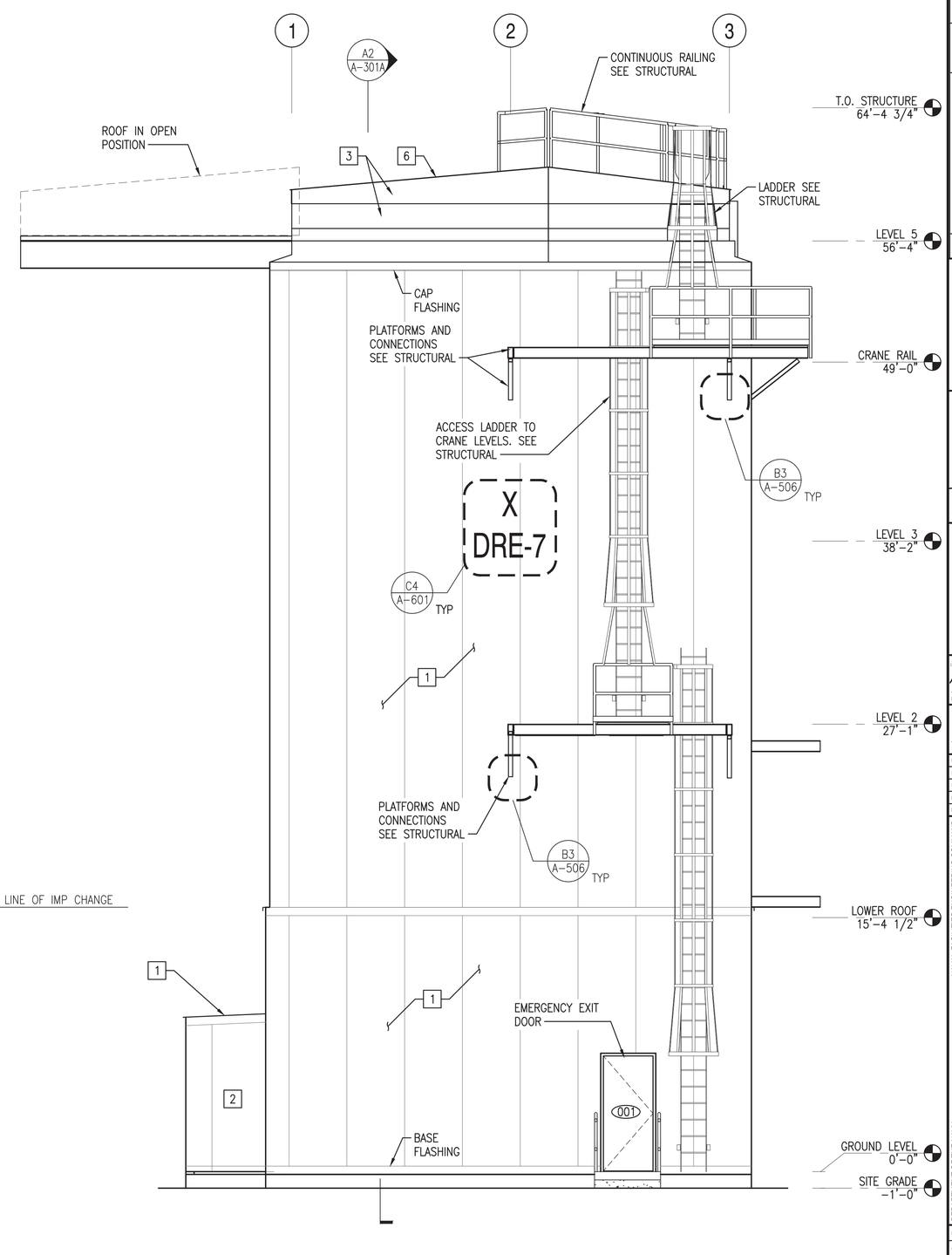

SOUTH ELEVATION

SCALE: 1/4"=1'-0"

A-100A, A-101A, A-102, A-103 (A4)

0 2' 4' 8'
Scale: 1/4" = 1'-0"

SYM	DESCRIPTION	DATE	APPR
0	ISSUED FOR CONSTRUCTION	10/28/2016	CBC

NAVFAC

REGISTERED ARCHITECT DONALD M. DYER No. 859 STATE OF MAINE 10/28/16

Colby Company engineering

A/E INFO

APPROVED Daniel W. Greenfield FOR COMMANDER NAVFAC

ACTIVITY TIM FISHER C. 2370.6 BRANCH HEAD

SATISFACTORY TO DATE 10/28/2016

DES GJN | DRW GJN | CHK DMD

PM/DM PETER STOCKLESS

BRANCH MANAGER IAN BODWELL

FEAD/PM&E AMIN BAHROUR

FIRE PROTECTION PATRICK BAKAJ

DEPARTMENT OF THE NAVY
NAVAL FACILITIES ENGINEERING COMMAND
PUBLIC WORKS DEPARTMENT - MAINE

NAVAL FACILITIES ENGINEERING COMMAND ~ MID-ATLANTIC
NAVAL SHIPYARD - PORTSMOUTH NH

PORTSMOUTH NAVAL SHIPYARD
KITTERY, ME

DRY DOCK #1 DEFUELING COMPLEX DRE-7

BUILDING SECTIONS

EPROJECT NO.: 1363311

CONSTR. CONTR. NO. N40085-17-C-5002

NAVFAC DRAWING NO. 12735039

SHEET 68 OF 117

A-202A | DD1-16-1120

DRAWFORM REVISION: 10 OCTOBER 2014

10/28/2016 7:05:16 AM X:\297 PORTSMOUTH NAVAL SHIPYARD\297.005.001 - DD#1 DEFUELING COMPLEX DESIGN\DRAWINGS\DRE7\SHEETS\A-202A.DWG

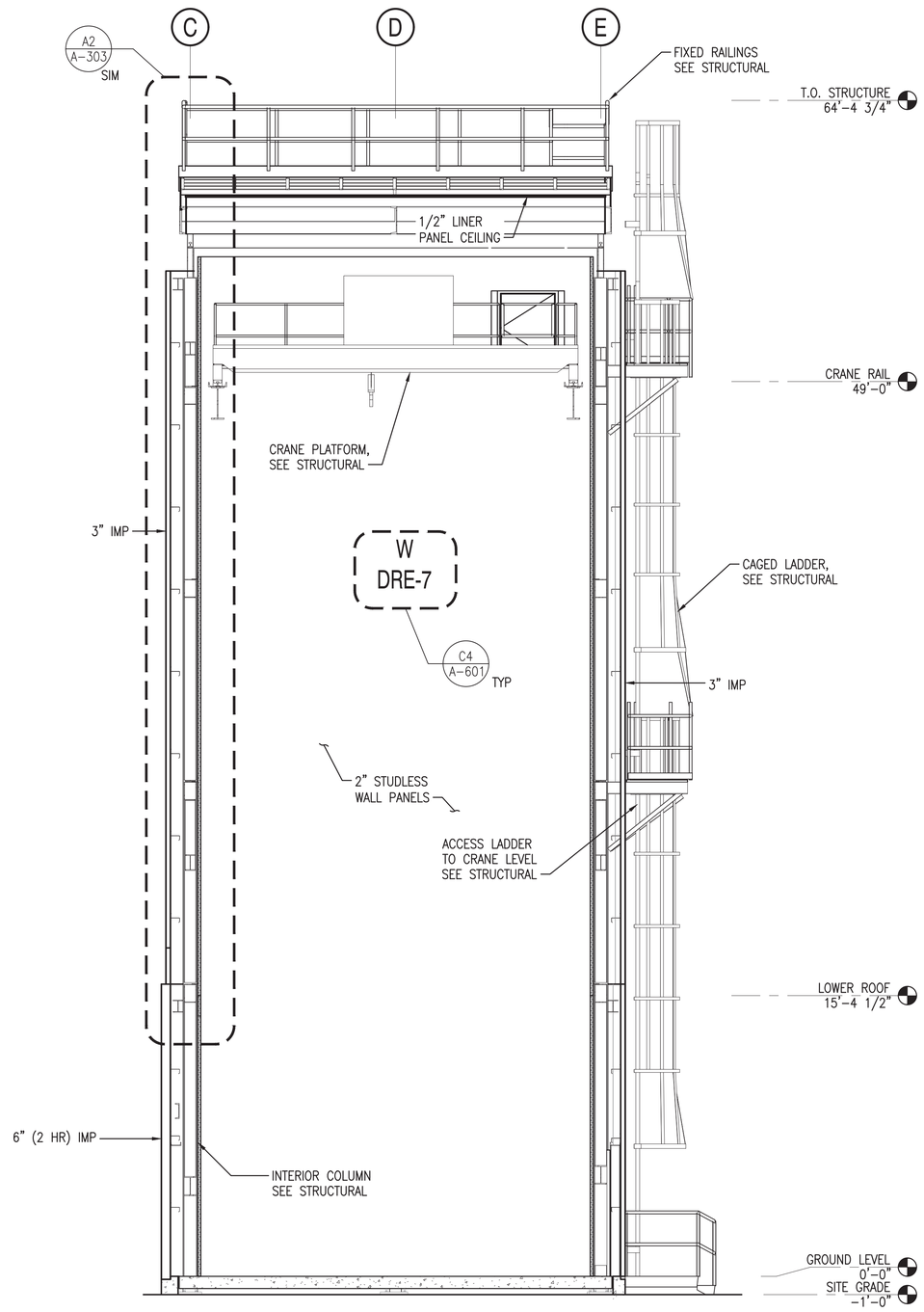

BUILDING SECTION

SCALE: 1/4" = 1'-0"

A-100, A-101, A-102, A-103, A-201, A-202 (A2)

NOTES

1. ANY AND ALL CRANE INFORMATION IS FOR INFORMATIONAL PURPOSES ONLY. DETAILS TO BE PROVIDED BY CRANE MANUFACTURER AND IS IN NO WAY SHOWN TO PORTRAY THE CRANE TO BE DESIGNED AS PART OF THIS PROJECT.
2. SEE DRAWING A-001 FOR GENERAL NOTES, ABBREVIATIONS AND LEGEND.
3. RAILINGS, LADDERS AND GATES SHOWN FOR CONTEXT ONLY. FOR ACTUAL DIMENSIONS AND GEOMETRY SEE STRUCTURAL DETAIL DRAWINGS.

SYM	DESCRIPTION	DATE	APPR
0	ISSUED FOR CONSTRUCTION	10/28/2016	CBC

NAVFAC

REGISTERED ARCHITECT
DONALD M. DYER
No. 859
STATE OF MAINE
10/28/16

Colby Company engineering

A/E INFO

APPROVED
Daniel W. Greenfield
FOR COMMANDER NAVFAC

ACTIVITY
TIM FISHER
C. 2370.6 BRANCH HEAD

SATISFACTORY TO DATE 10/28/2016

DES GJN DRW GJN CHK DMD

PMDM PETER STOCKLESS

BRANCH MANAGER IAN BODWELL

FEA/PM&E AMIN BAHROUR

FIRE PROTECTION PATRICK BAKAJ

DEPARTMENT OF THE NAVY
NAVAL FACILITIES ENGINEERING COMMAND
PUBLIC WORKS DEPARTMENT - MAINE

NAVAL FACILITIES ENGINEERING COMMAND ~ MID-ATLANTIC
NAVAL SHIPYARD - PORTSMOUTH, NH

PORTSMOUTH NAVAL SHIPYARD
KITTERY, ME

DRY DOCK #1 DEFUELING COMPLEX
DRE-7

BUILDING SECTION (NO STORAGE ANNEX)

EPROJECT NO.: 1363311

CONSTR. CONTR. NO.
N40085-17-C-5002

NAVFAC DRAWING NO.
12735040

SHEET 69 OF 117

A-301 | DD1-16-1121

DRAWFORM REVISION: 10 OCTOBER 2014

0 2' 4' 8'
Scale: 1/4" = 1'-0"

10/28/2016 7:05:20 AM X:\297 PORTSMOUTH NAVAL SHIPYARD\297.005.001 - DD#1 DEFUELING COMPLEX DESIGN\DRAWINGS\DRE7\SHEETS\A-301.DWG

NOTES

1. SEE DRAWING A-001 FOR GENERAL NOTES, ABBREVIATIONS AND LEGEND.
2. RAILINGS, LADDERS AND GATES SHOWN FOR CONTEXT ONLY. FOR ACTUAL DIMENSIONS AND GEOMETRY SEE STRUCTURAL DETAIL DRAWINGS.
3. ANY AND ALL CRANE INFORMATION IS FOR INFORMATIONAL PURPOSES ONLY. DETAILS TO BE PROVIDED BY CRANE MANUFACTURER AND IS IN NO WAY SHOWN TO PORTRAY THE CRANE TO BE DESIGNED AS PART OF THIS PROJECT.

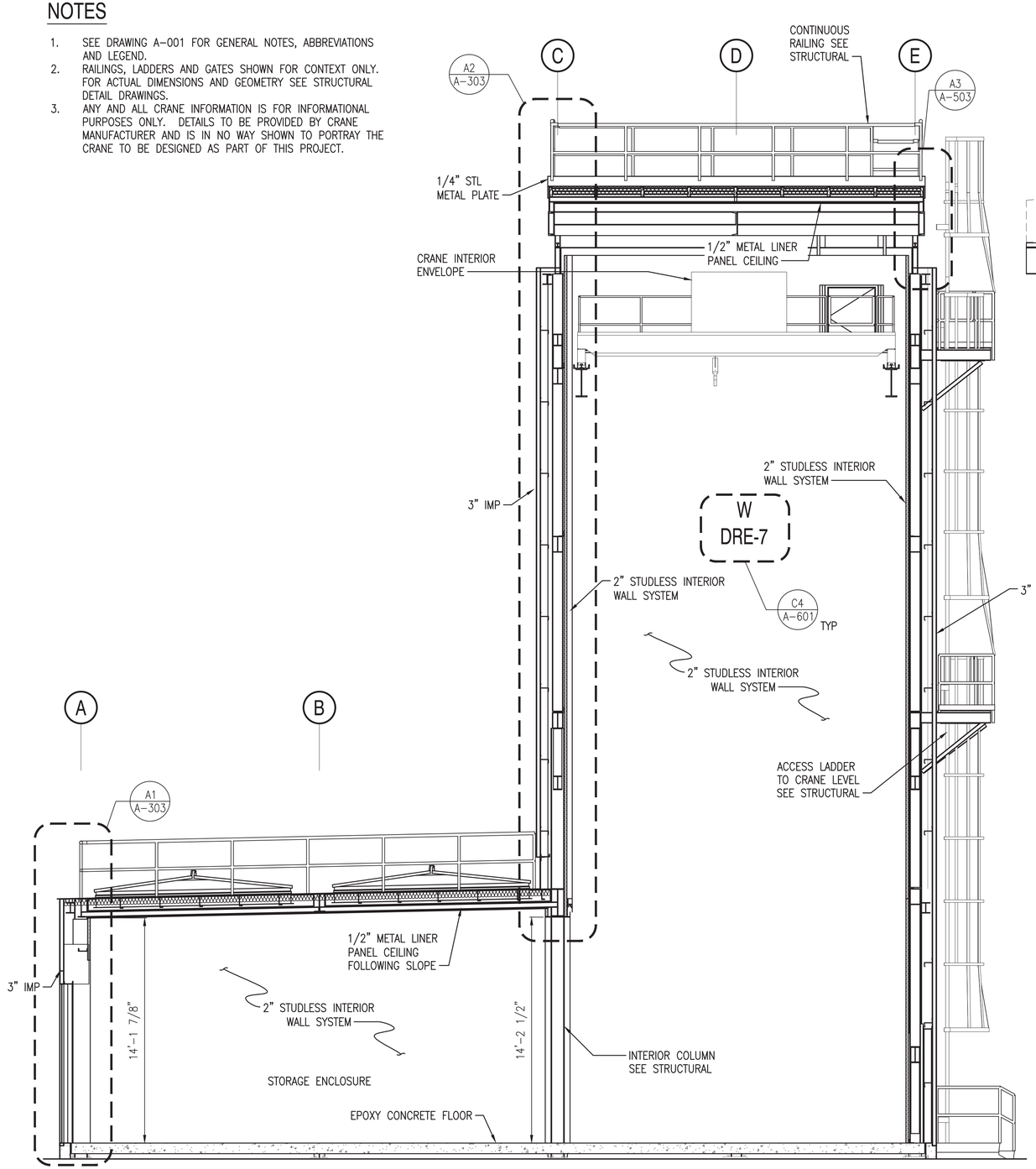

BUILDING SECTION

SCALE: 1/4" = 1'-0" A-100A, A-101A, A-102, A-103, A-201A, A-202A (A2)

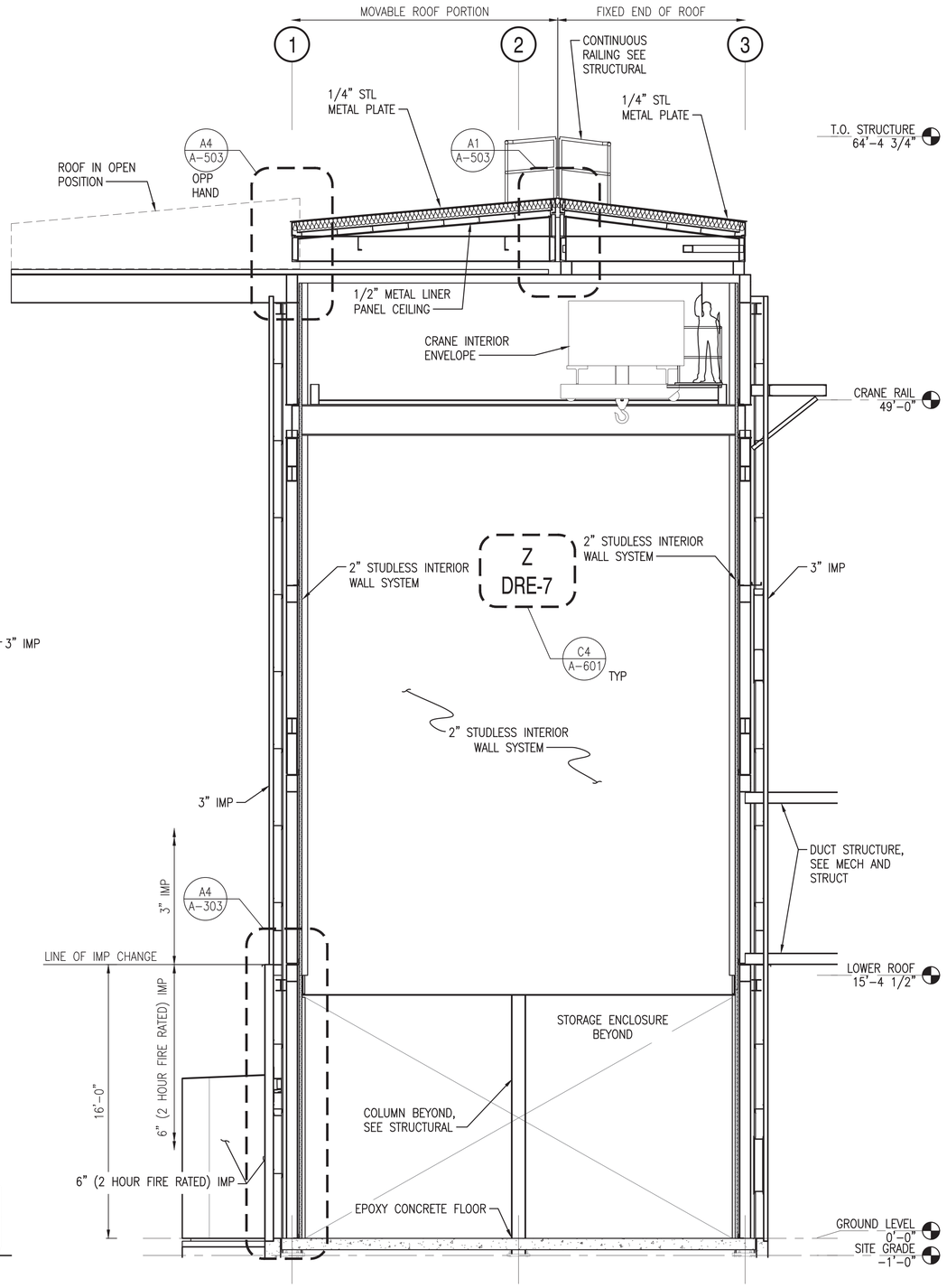

BUILDING SECTION

SCALE: 1/4" = 1'-0" A-100, A-100A, A-101, A-101A, A-102, A-103, A-201A, A-202, A-202A (A4)

0 2' 4' 8'
Scale: 1/4" = 1'-0"

SYM	DESCRIPTION	DATE	APPR
0	ISSUED FOR CONSTRUCTION	10/28/2016	CBC

NAVFAC

REGISTERED ARCHITECT DONALD M. DYER No. 859 STATE OF MAINE 10/28/16

Colby Company engineering

A/E INFO

APPROVED Daniel W. Greenfield
FOR COMMANDER NAVFAC
ACTIVITY TIM FISHER C. 2370.6 BRANCH HEAD
SATISFACTORY TO DATE 10/28/2016
DES GJN DRW GJN CHK DMD
PM/DM PETER STOCKLESS
BRANCH MANAGER IAN BODWELL
FEA/DPM&E AMIN BAHROUR
FIRE PROTECTION PATRICK BAKAJ

DEPARTMENT OF THE NAVY
NAVAL FACILITIES ENGINEERING COMMAND
PUBLIC WORKS DEPARTMENT - MAINE
NAVAL FACILITIES ENGINEERING COMMAND – MID-ATLANTIC
NAVAL SHIPYARD - PORTSMOUTH, NH
PORTSMOUTH NAVAL SHIPYARD
KITTERY, ME
DRY DOCK #1 DEFUELING COMPLEX
DRE-7
BUILDING SECTIONS

EPROJECT NO.: 1363311
CONSTR. CONTR. NO. N40085-17-C-5002
NAVFAC DRAWING NO. 12735041
SHEET 70 OF 117
A-301A DD1-16-1122

DRAWFORM REVISION: 10 OCTOBER 2014

10/28/2016 7:05:26 AM X:\297 PORTSMOUTH NAVAL SHIPYARD\297.005.001 - DD#1 DEFUELING COMPLEX DESIGN\DRAWINGS\DRE7\SHEETS\A-301A.DWG

NOTES

1. SEE DRAWING A–001 FOR GENERAL NOTES, ABBREVIATIONS AND LEGEND.
2. RAILINGS, LADDERS AND GATES SHOWN FOR CONTEXT ONLY. FOR ACTUAL DIMENSIONS AND GEOMETRY SEE STRUCTURAL DETAIL DRAWINGS.
3. ANY AND ALL CRANE INFORMATION IS FOR INFORMATIONAL PURPOSES ONLY. DETAILS TO BE PROVIDED BY CRANE MANUFACTURER AND IS IN NO WAY SHOWN TO PORTRAY THE CRANE TO BE DESIGNED AS PART OF THIS PROJECT.

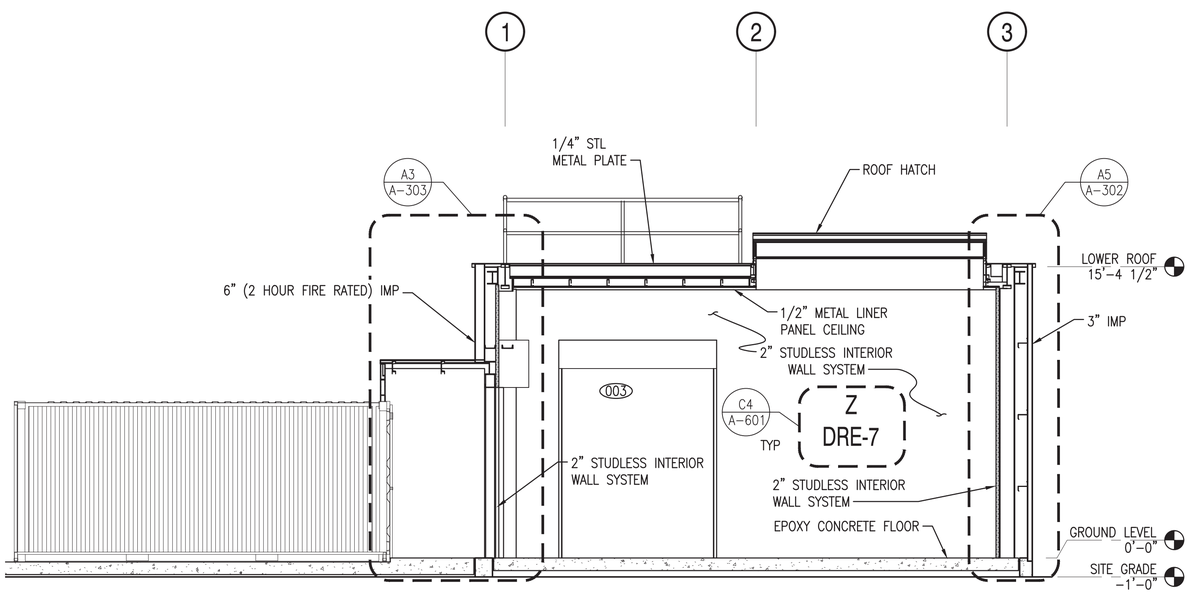

BUILDING SECTION (BID ALT VIEW)

SCALE: 1/4" = 1'–0"

A–100A, A–101A, A–201A, A–202A

A2

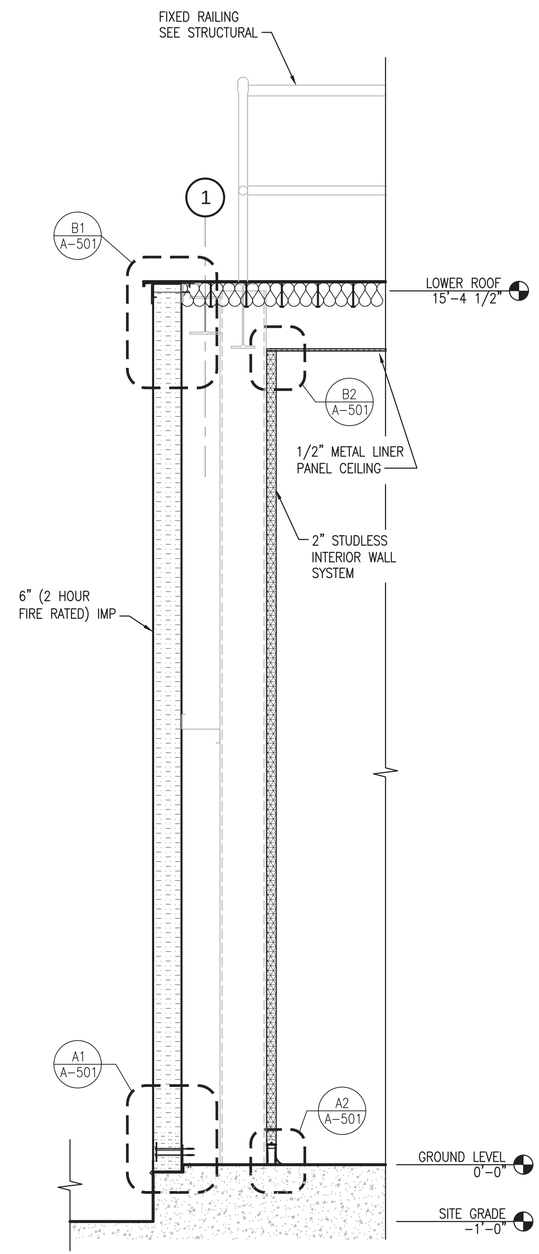

WALL SECTION @ 6" IMP

SCALE: 3/4"=1'–0"

A–100A, A–101A

A4

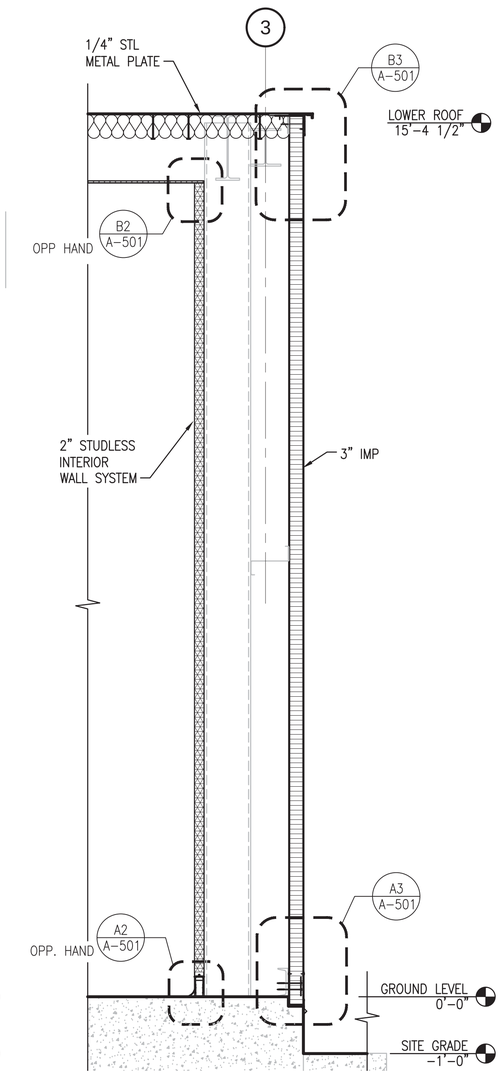

WALL SECTION @ 3" IMP

SCALE: 3/4"=1'–0"

A–100A, A–101A, A–302

A5

Scale: 1/4" = 1'–0"

Scale: 3/4" = 1'–0"

SYM	DESCRIPTION	DATE	APPR
0	ISSUED FOR CONSTRUCTION	10/28/2016	CBC

NAVFAC

REGISTERED ARCHITECT DONALD M. DYER No. 859 STATE OF MAINE 10/28/16

Colby Company engineering

A/E INFO

APPROVED Daniel W. Greenfield FOR COMMANDER NAVFAC

ACTIVITY TIM FISHER C. 2370.6 BRANCH HEAD

SATISFACTORY TO DATE 10/28/2016

DES GJN DRW GJN CHK DMD

PMDM PETER STOCKLESS

BRANCH MANAGER IAN BODWELL

FEA/PM&E AMIN BAHROUR

FIRE PROTECTION PATRICK BAKAJ

DEPARTMENT OF THE NAVY
NAVAL FACILITIES ENGINEERING COMMAND ~ MID-ATLANTIC
PUBLIC WORKS DEPARTMENT - MAINE
NAVAL FACILITIES ENGINEERING COMMAND
NAVAL SHIPYARD, PORTSMOUTH, NH
PORTSMOUTH NAVAL SHIPYARD
KITTERY, ME
DRY DOCK #1 DEFUELING COMPLEX
DRE-7
BUILDING SECTIONS

EPROJECT NO.: 1363311

CONSTR. CONTR. NO. N40085-17-C-5002

NAVFAC DRAWING NO. 12735042

SHEET 71 OF 117

A-302 DD1-16-1123

DRAWFORM REVISION: 10 OCTOBER 2014

10/28/2016 7:05:39 AM X:\297 PORTSMOUTH NAVAL SHIPYARD\297.005.001 - DD#1 DEFUELING COMPLEX DESIGN\DRAWINGS\DRE7\SHEETS\A-302.DWG

NOTES

1. SEE DRAWING A–001 FOR GENERAL NOTES, ABBREVIATIONS AND LEGEND.
2. RAILINGS, LADDERS AND GATES SHOWN FOR CONTEXT ONLY. FOR ACTUAL DIMENSIONS AND GEOMETRY SEE STRUCTURAL DETAIL DRAWINGS.
3. UNLESS STATED OTHERWISE, FASTENER AND POP RIVET SPACING PER MANUFACTURER'S STANDARD REQUIREMENTS.

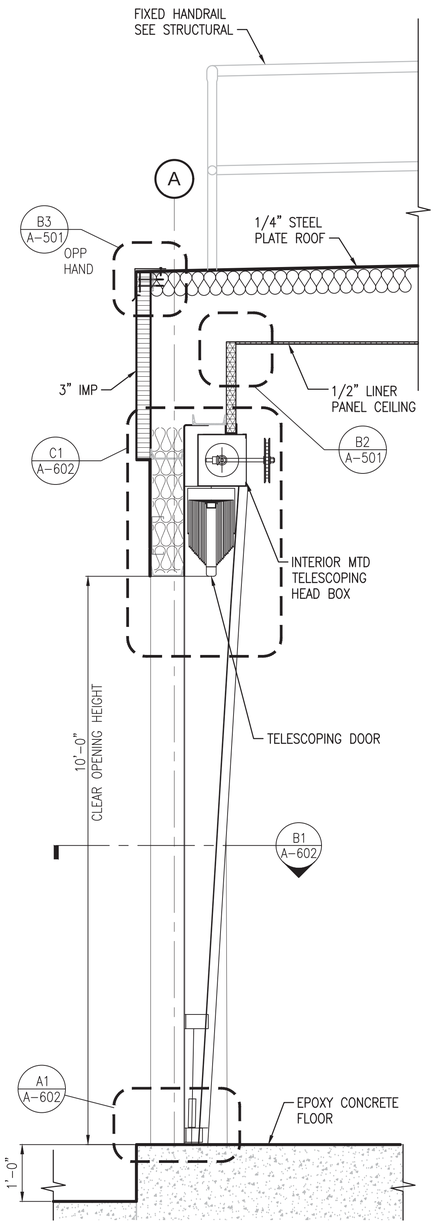

SECTION @ DOOR 003

SCALE: 3/4"=1'–0" A–301, A–301A (A1)

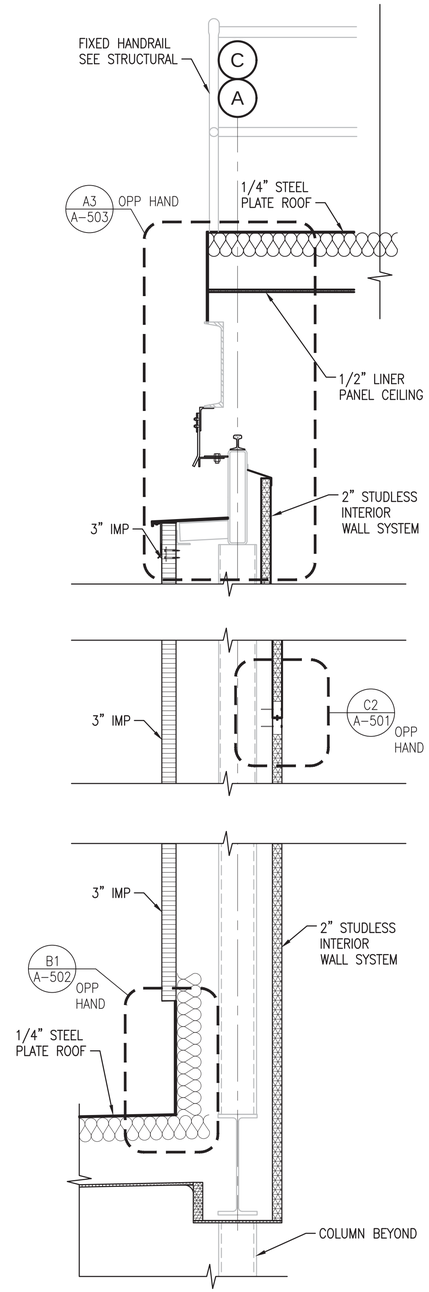

SECTION @ LOW ROOF TO MOVABLE ROOF

SCALE: 3/4"=1'–0" A–301, A–301A (A2)

DETAIL NOTE:
ISO CONTAINER BUMPOUT TO BE CLEANROOM FINISH CONSISTING OF EPOXY CONCRETE FLOOR, 2" STUDLESS INTERIOR WALL PANEL AND 1/2" LINER PANEL CEILING. BUMPOUT REQUIRED IN ORDER TO ACCOMMODATE OUTWARD SWINGING ISO CONTAINER DOORS SO NO OPERATIONAL SQUARE FOOTAGE WITHIN DRE–7 ENCLOSURE IS COMPROMISED BY THE DOOR SWING.

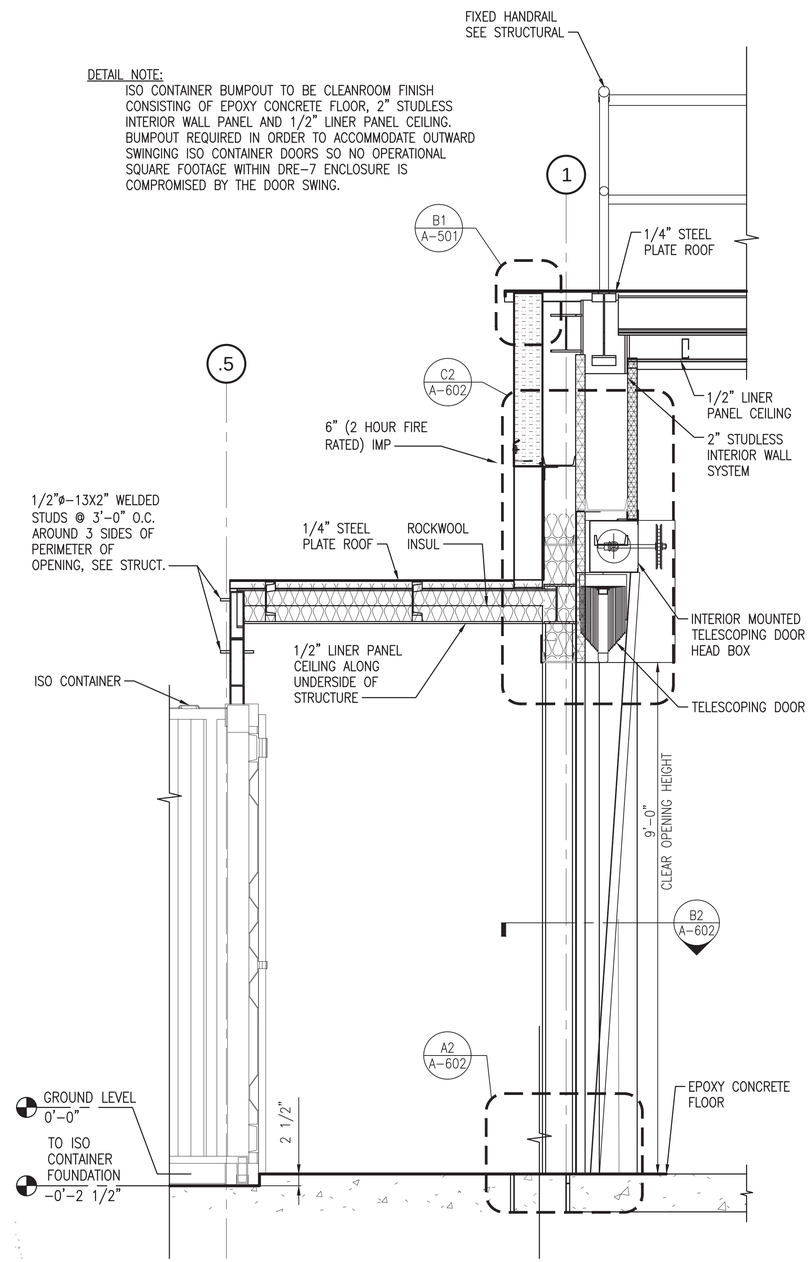

SECTION @ DOOR 004 (BID OPTION ONLY)

SCALE: 3/4"=1'–0" A–302 (A3)

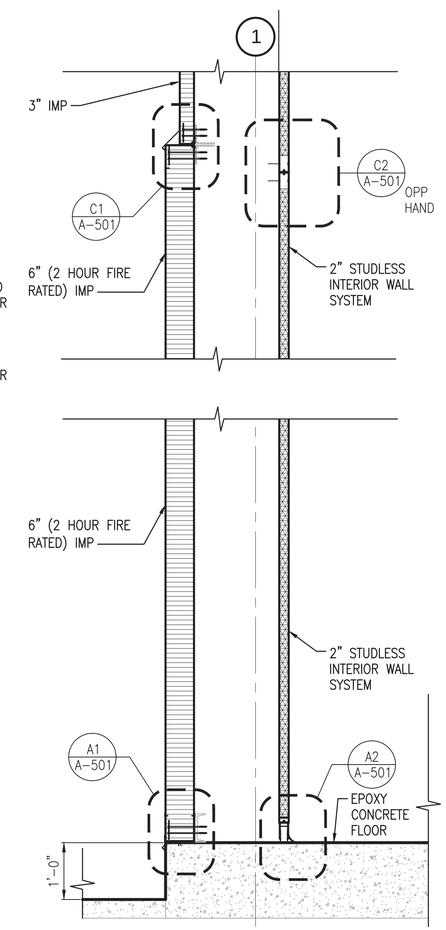

SECTION @ 3" TO 6" IMP TRANSITION

SCALE: 3/4"=1'–0" A–301A (A4)

Scale: 3/4" = 1'–0"

SYM	DESCRIPTION	DATE	APPR
0	ISSUED FOR CONSTRUCTION	10/28/2016	CBC

NAVFAC

REGISTERED ARCHITECT DONALD M. DYER No. 859 STATE OF MAINE 10/28/16

Colby Company engineering

A/E INFO

APPROVED Daniel W. Greenfield FOR COMMANDER NAVFAC

ACTIVITY: TIM FISHER, C. 2370.6 BRANCH HEAD

SATISFACTORY TO DATE 10/28/2016

DES GJN DRW GJN CHK DMD

PMDM: PETER STOCKLESS

BRANCH MANAGER: IAN BODWELL

FEAD/PM&E: AMIN BAHROUR

FIRE PROTECTION: PATRICK BAKAJ

DEPARTMENT OF THE NAVY
NAVAL FACILITIES ENGINEERING COMMAND ~ MID-ATLANTIC
PUBLIC WORKS DEPARTMENT - MAINE
NAVAL FACILITIES ENGINEERING COMMAND
NAVAL SHIPYARD - PORTSMOUTH, NH
PORTSMOUTH NAVAL SHIPYARD
KITTERY, ME
DRY DOCK #1 DEFUELING COMPLEX
DRE-7
WALL SECTIONS

EPROJECT NO.: 1363311

CONSTR. CONTR. NO. N40085-17-C-5002

NAVFAC DRAWING NO. 12735043

SHEET 72 OF 117

A-303 | DD1-16-1124

DRAWFORM REVISION: 10 OCTOBER 2014

10/28/2016 7:06:08 AM X:\297 PORTSMOUTH NAVAL SHIPYARD\297.005.001 - DD#1 DEFUELING COMPLEX DESIGN\DRAWINGS\DRE7\SHEETS\A-303.DWG

NOTES

1. SEE DRAWING A-001 FOR GENERAL NOTES, ABBREVIATIONS AND LEGEND.
2. AT ALL HORIZONTAL SEAMS OF VERTICAL PANEL THE SUPPORT BEHIND UPPER PANEL MUST BE CONT. AND MIN 3" TALL, CONT SEALED WITH SILICONE SEALANT. THIS IS REQUIRED TO OFFSET NEGATIVE PRESSURE THE WALL PANEL WILL EXPERIENCE DUE TO A VACUUM EFFECT FROM THE HVAC SYSTEM.
3. ALL CORNERS, EDGES AND SEAMS OF 2" STUDLESS WALL PANELS TO BE CONT. SEALED AND FINISHED WITH MANUFACTURER'S RECOMMENDED COVING TO AVOID ANY SHARP EDGES OR CREVICES WITHIN SYSTEM. CLEANROOM ENVIRONMENT IS REQUIRED FOR OPERATIONS.
4. UNLESS STATED OTHERWISE, FASTENER AND POP RIVET SPACING PER MANUFACTURER'S STANDARD REQUIREMENTS.

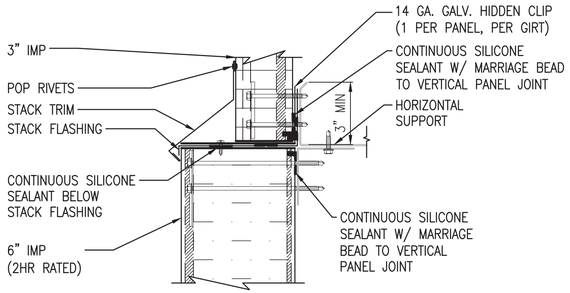

6" IMP TO 3" IMP VERTICAL SEAM (C1)
SCALE: 3"=1'-0" A-101A, A-201, A-202, A-303

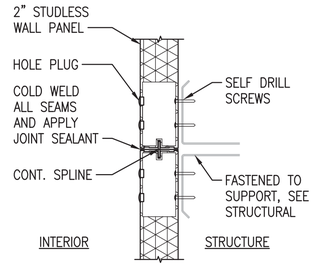

2" STUDLESS VERTICAL STACKING, TYP (C2)
SCALE: 3"=1'-0" A-303

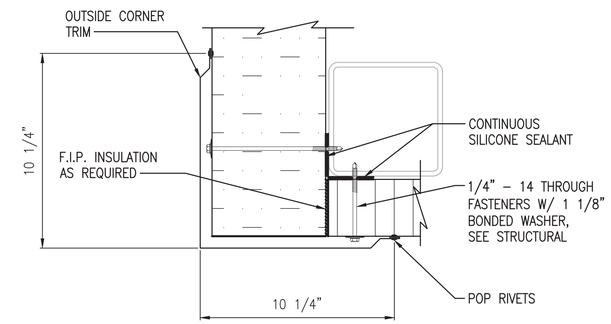

6" (2 HOUR FIRE RATED) IMP TO 3" IMP CORNER PLAN SECTION (C4)
SCALE: 3"=1'-0" A-100A

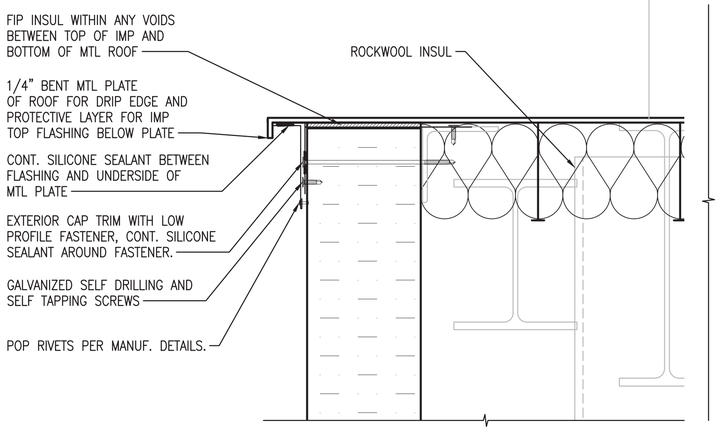

6" IMP TO STL PLATE ROOF (B1)
SCALE: 3"=1'-0" A-302, A-303

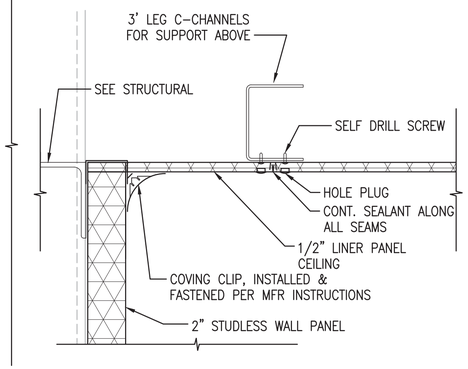

2" STUDLESS TO 1/2" LINER PANEL CEILING, TYP (B2)
SCALE: 3"=1'-0" A-302, A-303

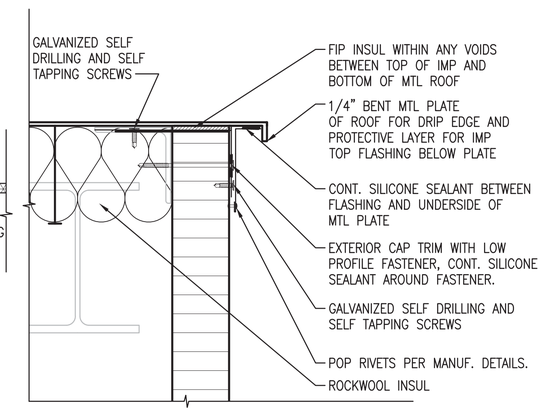

3" IMP TO STL PLATE ROOF, TYP (B3)
SCALE: 3"=1'-0" A-302, A-303, A-503

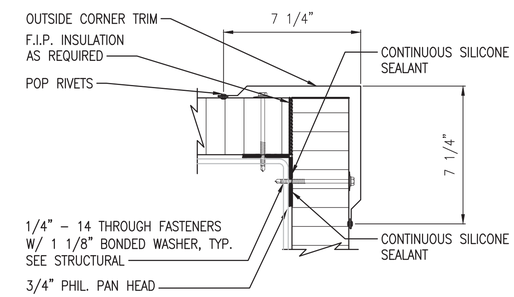

3" IMP CORNER PLAN SECTION, TYP (B4)
SCALE: 3"=1'-0" A-100, A-100A, A-101A

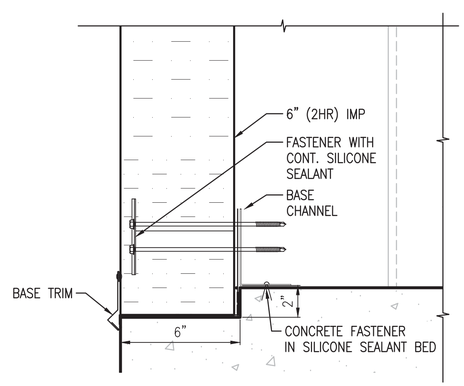

6" IMP BASE @ CONC FLR (A1)
SCALE: 3"=1'-0" A-302, A-303

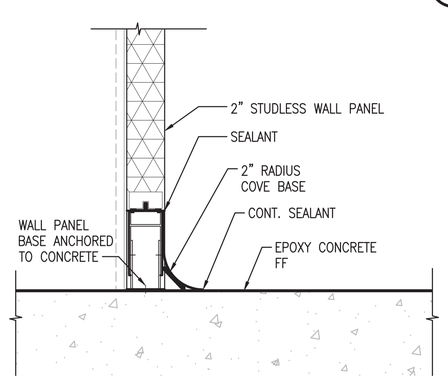

2" STUDLESS BASE @ CONC FLR (A2)
SCALE: 3"=1'-0" A-302, A-303

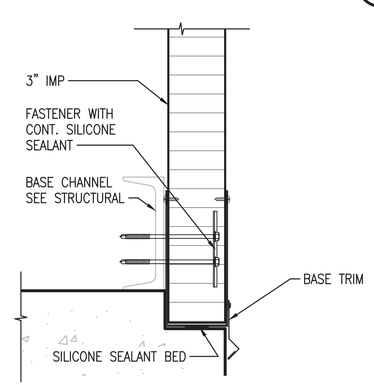

3" IMP BASE @ CONC FLR (A3)
SCALE: 3"=1'-0" A-302

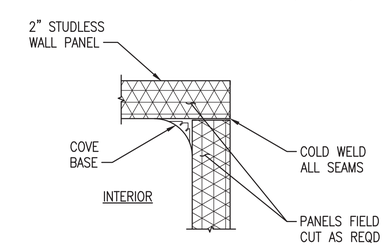

2" STUDLESS CORNER PLAN SECTION, TYP (A4)
SCALE: 3"=1'-0" A-100A, A-101A

0 1/2' 1' 1 1/2'
Scale: 1 1/2" = 1'-0"
0 3" 6" 9"
Scale: 3" = 1'-0"
0 6" 12" 18"
Scale: 6" = 1'-0"

SYM	DESCRIPTION	DATE	APPR
0	ISSUED FOR CONSTRUCTION	10/28/2016	CBC

NAVFAC

REGISTERED ARCHITECT DONALD M. DYER No. 859 STATE OF MAINE 10/28/16

Colby Company engineering

A/E INFO

APPROVED Daniel W. Greenfield FOR COMMANDER NAVFAC

ACTIVITY TIM FISHER C. 2370.6 BRANCH HEAD

SATISFACTORY TO DATE 10/28/2016

DES GJN DRW GJN CHK DMD

PMDM PETER STOCKLESS

BRANCH MANAGER IAN BODWELL

FEAD/PMAE AMIN BAHROUR

FIRE PROTECTION PATRICK BAKAJ

DEPARTMENT OF THE NAVY
NAVAL FACILITIES ENGINEERING COMMAND ~ MID-ATLANTIC
PUBLIC WORKS DEPARTMENT - MAINE
NAVAL FACILITIES ENGINEERING COMMAND
NAVAL SHIPYARD - PORTSMOUTH, NH
PORTSMOUTH NAVAL SHIPYARD
KITTERY, ME
DRY DOCK #1 DEFUELING COMPLEX
DRE-7
WALL DETAILS

EPROJECT NO.: 1363311

CONSTR. CONTR. NO. N40085-17-C-5002

NAVFAC DRAWING NO. 12735044

SHEET 73 OF 117

A-501 DD1-16-1125

DRAWFORM REVISION: 10 OCTOBER 2014

10/28/2016 7:06:19 AM X:\297 PORTSMOUTH NAVAL SHIPYARD\297.005.001 - DD#1 DEFUELING COMPLEX DESIGN\DRAWINGS\DRE7\SHEETS\A-501.DWG

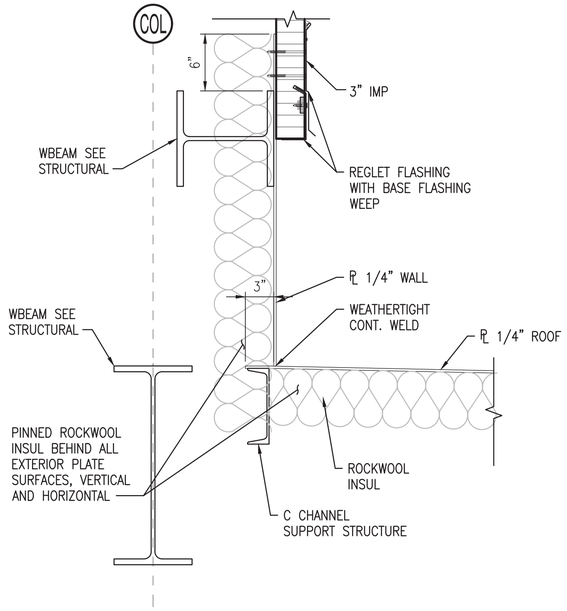

MTL PLATE ROOF TO IMP WALL JOINT

SCALE: 3"=1'-0" A-101A, A-201A, A-303 (B1)

DETAIL NOTE:
2'-0" TALL METAL VERTICAL FACE INTENDED TO OFFSET POTENTIAL ICE/SNOW BUILDUP @ JOINT DURING COLDER MONTHS.
SPECIAL ATTENTION TO BE TAKEN AT CONT. WELD AT UPPER EDGE OF LOW SLOPE ROOF & BOTTOM OF 2'-0" TALL VERTICAL METAL PLATE.

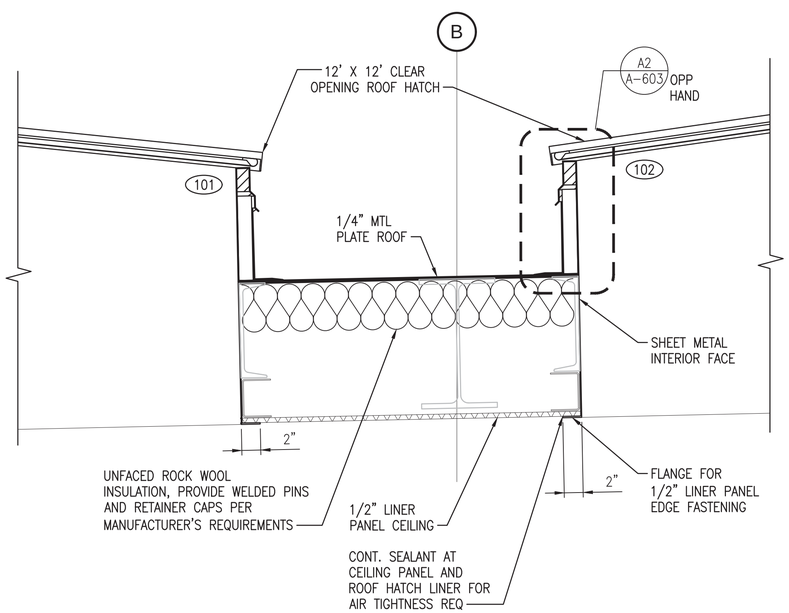

ROOF HATCH EDGE DETAIL

SCALE: 1-1/2"=1'-0" A-101A (A1)

NOTES

1. SEE DRAWING A-001 FOR GENERAL NOTES, ABBREVIATIONS AND LEGEND.
2. UNLESS STATED OTHERWISE, FASTENER AND POP RIVET SPACING PER MANUFACTURER'S STANDARD REQUIREMENTS.

0 1/2' 1' 1 1/2'
Scale: 1 1/2" = 1'-0"

0 3" 6" 9"
Scale: 3" = 1'-0"

SYM	DESCRIPTION	DATE	APPR
0	ISSUED FOR CONSTRUCTION	10/28/2016	CBC

NAVFAC

REGISTERED ARCHITECT DONALD M. DYER No. 859 STATE OF MAINE
10/28/16

Colby Company engineering
A/E INFO

APPROVED
Daniel W. Greenfield
FOR COMMANDER NAVFAC

ACTIVITY
TIM FISHER
C. 2370.6 BRANCH HEAD

SATISFACTORY TO DATE 10/28/2016

DES GJN DRW GJN CHK DMD
PM/DM PETER STOCKLESS
BRANCH MANAGER IAN BODWELL
FEA/DPM&E AMIN BAHROUR
FIRE PROTECTION PATRICK BAKAJ

DEPARTMENT OF THE NAVY
NAVAL FACILITIES ENGINEERING COMMAND
PUBLIC WORKS DEPARTMENT - MAINE
NAVAL FACILITIES ENGINEERING COMMAND – MID-ATLANTIC
NAVAL SHIPYARD - PORTSMOUTH, NH
PORTSMOUTH NAVAL SHIPYARD
KITTERY, ME
DRY DOCK #1 DEFUELING COMPLEX
DRE-7
ARCHITECTURAL DETAILS

EPROJECT NO.: 1363311
CONSTR. CONTR. NO. N40085-17-C-5002
NAVFAC DRAWING NO. 12735045
SHEET 74 OF 117
A-502 DD1-16-1126

DRAWFORM REVISION: 10 OCTOBER 2014

10/28/2016 7:06:29 AM X:\297 PORTSMOUTH NAVAL SHIPYARD\297.005.001 - DD#1 DEFUELING COMPLEX DESIGN\DRAWINGS\DRE7\SHEETS\A-502.DWG

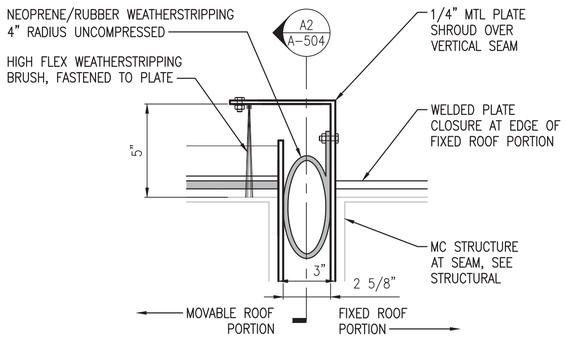

VERTICAL ROOF SEAM PLAN SECTION (C1)

SCALE: 3" = 1'-0" A-503

DETAIL NOTE C1:
INTENT OF THIS DETAIL IS TO SHOW THE CONTINUOUS ROOF AIR AND WATER SEAL TO MAINTAIN NEGATIVE DP REQUIREMENTS OF THE ENCLOSURE. THE SEAL AND BRUSH AS SHOWN SHALL BE CONTINUOUS ACROSS THE FACE AND SIDES OF THE ROOF SECTION AND COMPRESSED WHEN THE ROOF IS IN IT'S CLOSED POSITION.

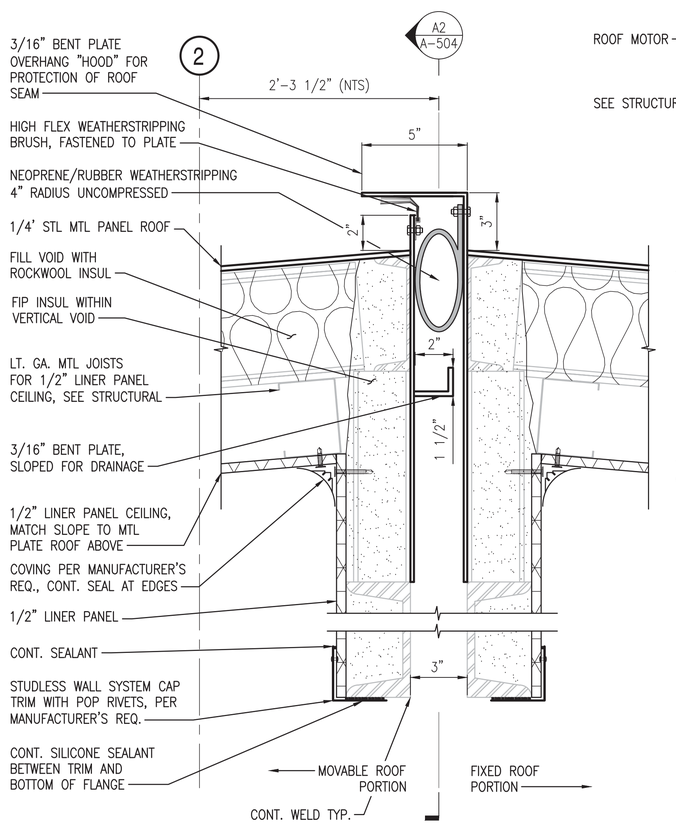

NOTE: SEE STRUCTURAL FOR TYPICAL ROOF BUMPER DETAIL

ROOF SEAM (A1)

SCALE: 3" = 1'-0" A-103, A-301A

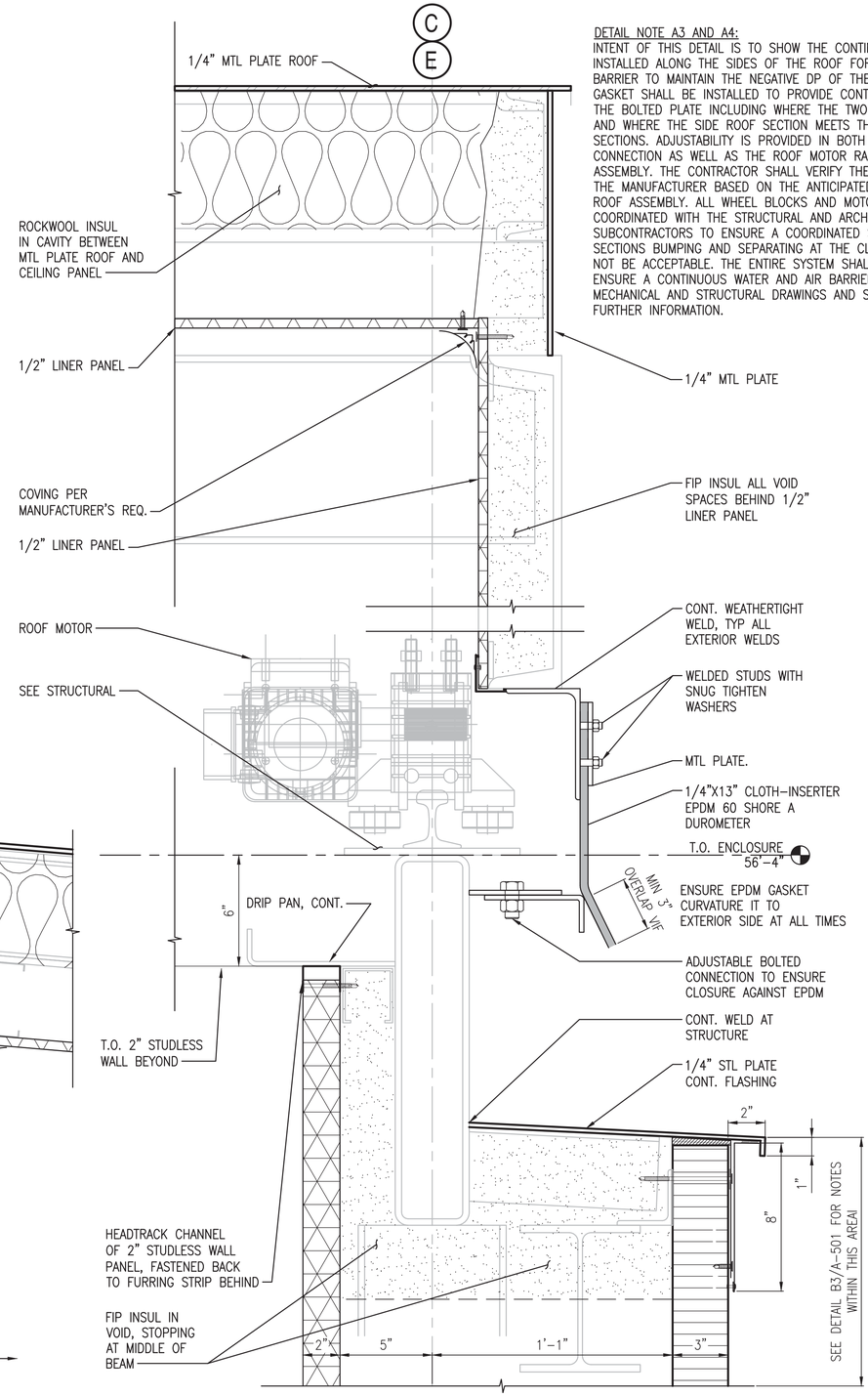

MOVABLE ROOF EDGE DETAIL (A3)

SCALE: 3"=1'-0" A-103, A-201, A-201A, A-301A, A-303

DETAIL NOTE A3 AND A4:
INTENT OF THIS DETAIL IS TO SHOW THE CONTINUOUS GASKET TO BE INSTALLED ALONG THE SIDES OF THE ROOF FOR THE WATER AND AIR BARRIER TO MAINTAIN THE NEGATIVE DP OF THE ENCLOSURE. THE GASKET SHALL BE INSTALLED TO PROVIDE CONTINUOUS CONTACT TO THE BOLTED PLATE INCLUDING WHERE THE TWO ROOF SECTIONS MEET AND WHERE THE SIDE ROOF SECTION MEETS THE END ROOF SECTIONS. ADJUSTABILITY IS PROVIDED IN BOTH THE BOLTED CONNECTION AS WELL AS THE ROOF MOTOR RAIL AND WHEEL BLOCK ASSEMBLY. THE CONTRACTOR SHALL VERIFY THE MOTOR SIZING WITH THE MANUFACTURER BASED ON THE ANTICIPATED WEIGHT OF THE ROOF ASSEMBLY. ALL WHEEL BLOCKS AND MOTORS SHALL BE COORDINATED WITH THE STRUCTURAL AND ARCHITECTURAL SUBCONTRACTORS TO ENSURE A COORDINATED SYSTEM. ROOF SECTIONS BUMPING AND SEPARATING AT THE CLOSE CONDITION WILL NOT BE ACCEPTABLE. THE ENTIRE SYSTEM SHALL BE COORDINATED TO ENSURE A CONTINUOUS WATER AND AIR BARRIER IS MAINTAINED. SEE MECHANICAL AND STRUCTURAL DRAWINGS AND SPECIFICATIONS FOR FURTHER INFORMATION.

NOTES

1. SEE DRAWING A-001 FOR GENERAL NOTES, ABBREVIATIONS AND LEGEND.
2. ENSURE THAT EPDM SKIRT IS CREATING SEAL AGAINST APPLICABLE METAL PROTRUSION ALONG MOVABLE ROOF PERIMETER. NO DAYLIGHT SHALL BE SEEN AT ANY LOCATION ALONG PERIMETER OF ROOF IN CLOSED POSITION.
3. UNLESS STATED OTHERWISE, FASTENER AND POP RIVET SPACING PER MANUFACTURER'S STANDARD REQUIREMENTS.

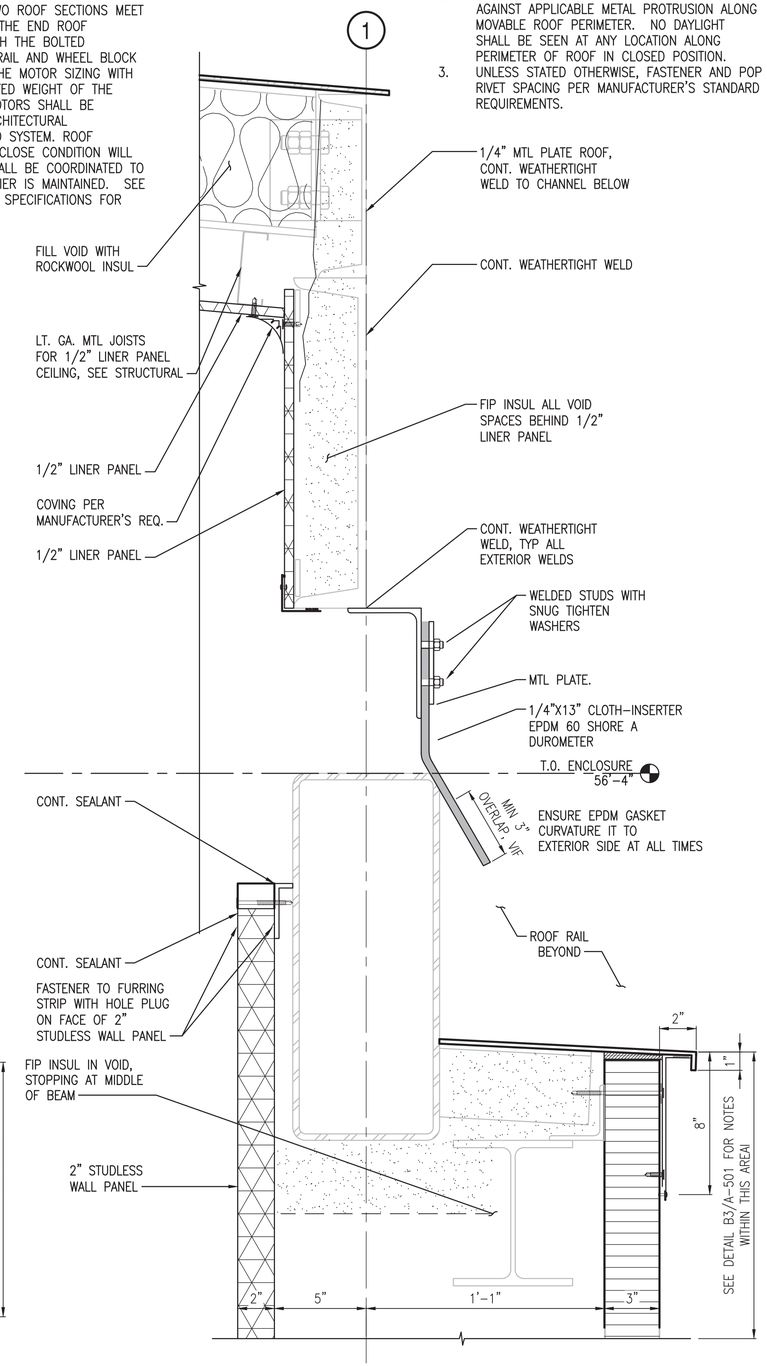

MOVABLE ROOF EDGE DETAIL (A4)

SCALE: 3"=1'-0" A-103, A-301A

0 3" 6" 9"
Scale: 3" = 1'-0"

SYM	DESCRIPTION	DATE	APPR
0	ISSUED FOR CONSTRUCTION	10/28/2016	CBC

NAVFAC

REGISTERED ARCHITECT DONALD M. DYER No. 859 STATE OF MAINE 10/28/16

Colby Company engineering

A/E INFO

APPROVED (Signature) Daniel W. Greenfield
FOR COMMANDER NAVFAC
ACTIVITY TIM FISHER C. 2370.6 BRANCH HEAD
SATISFACTORY TO DATE 10/28/2016
DES GJN DRW GJN CHK DMD
PM/DM PETER STOCKLESS
BRANCH MANAGER IAN BODWELL
FEA/PM&E AMIN BAHROUR
FIRE PROTECTION PATRICK BAKAJ

DEPARTMENT OF THE NAVY
NAVAL FACILITIES ENGINEERING COMMAND
PUBLIC WORKS DEPARTMENT - MAINE
NAVAL FACILITIES ENGINEERING COMMAND ~ MID-ATLANTIC
NAVAL SHIPYARD - PORTSMOUTH, NH
PORTSMOUTH NAVAL SHIPYARD
KITTERY, ME
DRY DOCK #1 DEFUELING COMPLEX
DRE-7
ROOF DETAILS

EPROJECT NO.: 1363311
CONSTR. CONTR. NO.: N40085-17-C-5002
NAVFAC DRAWING NO. 12735046
SHEET 75 OF 117
A-503 DD1-16-1127

DRAWFORM REVISION: 10 OCTOBER 2014

10/28/2016 7:06:34 AM X:\297 PORTSMOUTH NAVAL SHIPYARD\297.005.001 - DDH1 DEFUELING COMPLEX DESIGN\DRAWINGS\DRE7\SHEETS\A-503.DWG

NOTES

1. SEE DRAWING A–001 FOR GENERAL NOTES, ABBREVIATIONS AND LEGEND.
2. ENSURE THAT EPDM SKIRT IS CREATING SEAL AGAINST APPLICABLE METAL PROTRUSION ALONG MOVABLE ROOF PERIMETER. NO DAYLIGHT SHALL BE SEEN AT ANY LOCATION ALONG PERIMETER OF ROOF IN CLOSED POSITION.
3. UNLESS STATED OTHERWISE, FASTENER AND POP RIVET SPACING PER MANUFACTURER'S STANDARD REQUIREMENTS.

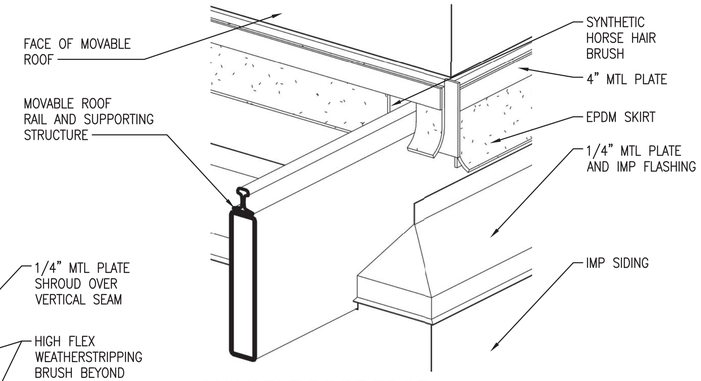

MOVABLE ROOF EDGE DIAGRAMMATIC ISO (D4)
SCALE: NTS

DETAIL NOTE A2:
INTENT OF THIS DETAIL IS TO SHOW THE DRAINAGE TUBE CONNECTED TO THE GUTTER TO ALLOW WATER TO DRAIN FROM ANY WIND DRIVEN RAIN OR OTHER EVENT. THE INTENT OF THE GUTTER IS TO PROVIDE PROTECTION FROM A MAJOR WEATHER EVENT IN THE CASE THE GASKET SEAL AND BRUSH FAIL OR WEAR. THE COTTON WICK IS UTILIZED TO SEAL OFF THE DRAINAGE TUBE TO MAINTAIN THE NEGATIVE DP OF THE ENCLOSURE.

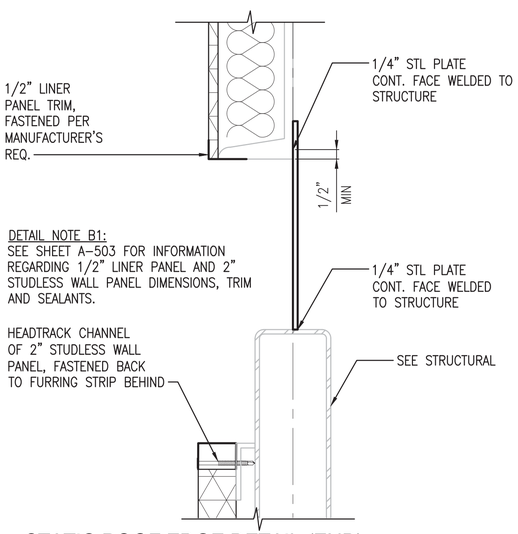

DETAIL NOTE B1:
SEE SHEET A–503 FOR INFORMATION REGARDING 1/2" LINER PANEL AND 2" STUDLESS WALL PANEL DIMENSIONS, TRIM AND SEALANTS.

STATIC ROOF EDGE DETAIL (END) (B1)
SCALE: 3"=1'–0" A–103, A–201, A–201A

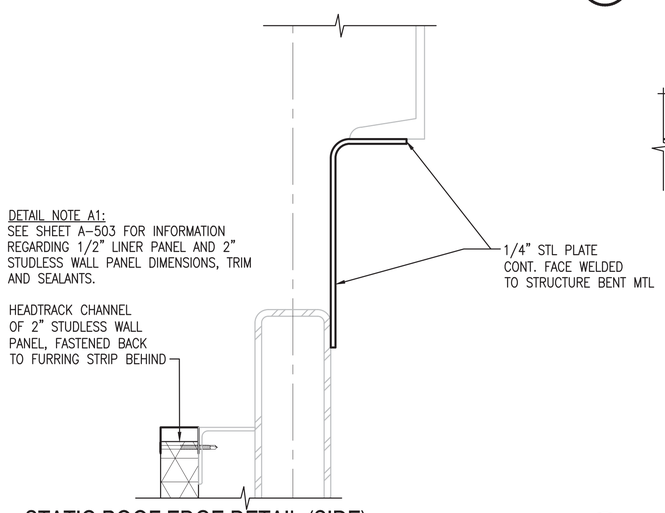

DETAIL NOTE A1:
SEE SHEET A–503 FOR INFORMATION REGARDING 1/2" LINER PANEL AND 2" STUDLESS WALL PANEL DIMENSIONS, TRIM AND SEALANTS.

STATIC ROOF EDGE DETAIL (SIDE) (A1)
SCALE: 3"=1'–0" A–103, A–201, A–201A

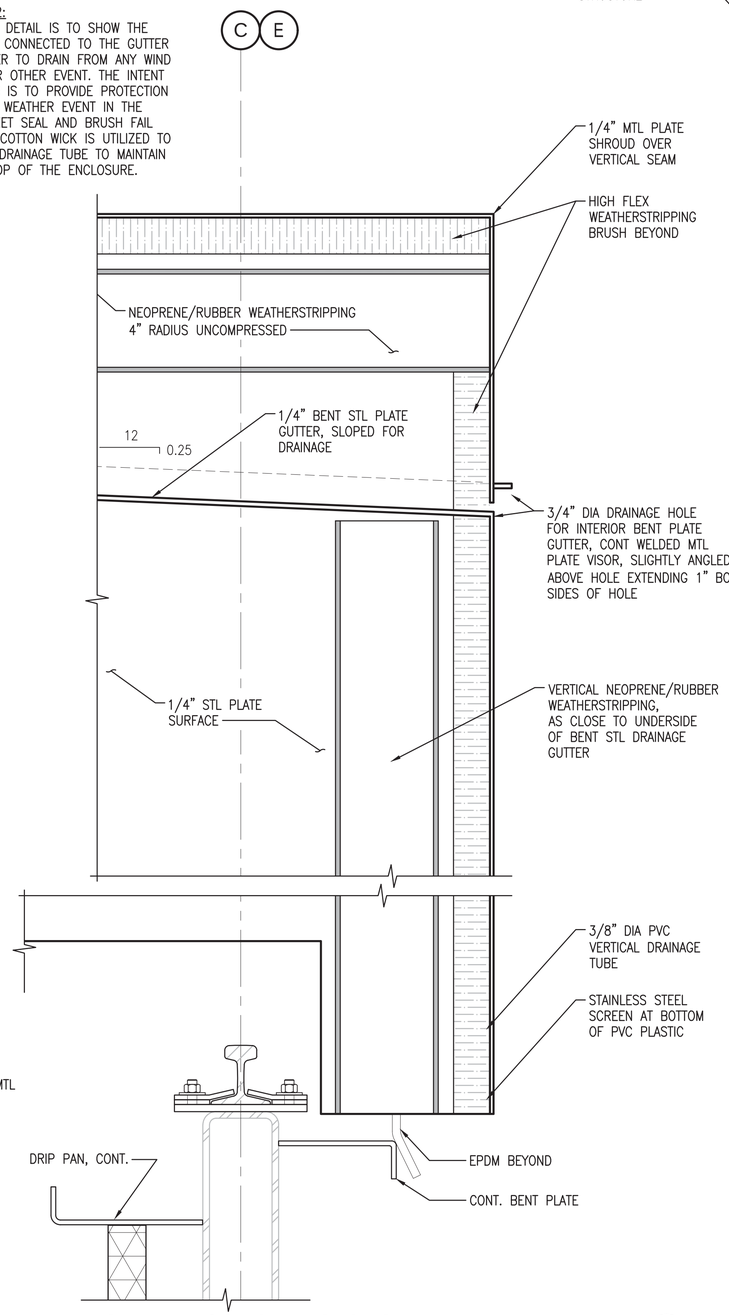

MOVABLE ROOF SEAM SECTION (A2)
SCALE: 3"=1'–0" A–503

DETAIL NOTE A4:
INTENT OF THIS DETAIL IS TO SHOW THE AIR AND WATER BARRIER SEAL AROUND THE ROOF RAIL. WEATHERSTRIPPING SHALL BE CUT TO FIT AROUND THE RAIL AND PROVIDE A COMPLETE BARRIER WITH NO GAP LARGER THAN 1/16" AROUND ANY PORTION OF THE RAIL OR THE ADJACENT EPDM SKIRT.

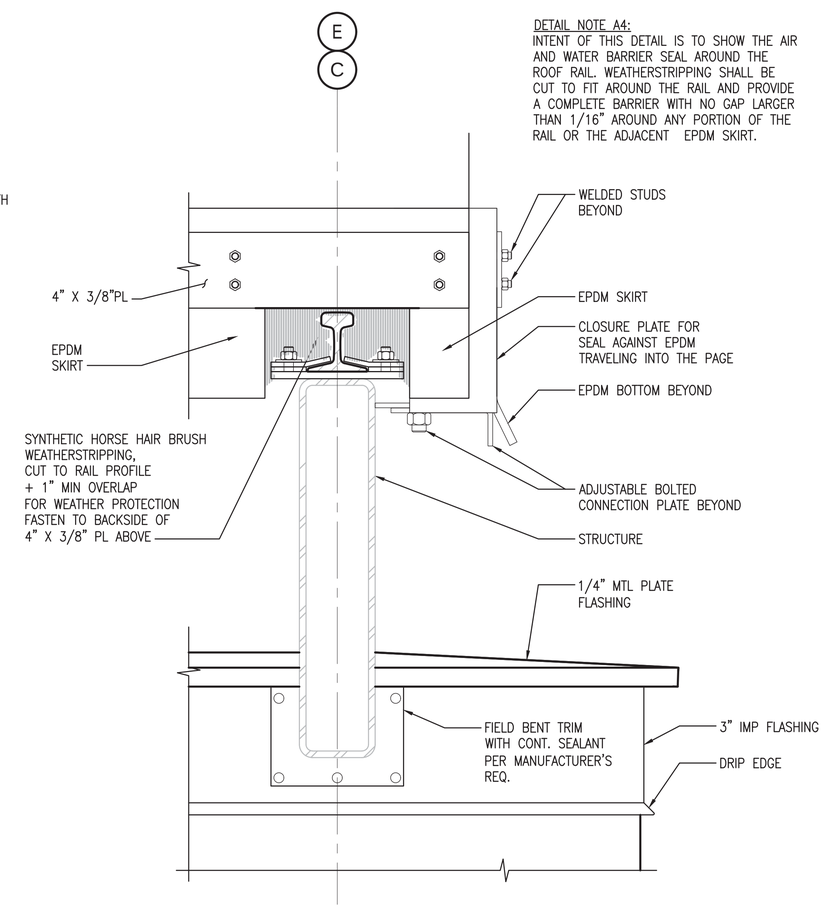

MOVABLE ROOF RAIL ELEVATION (A4)
SCALE: 3"=1'–0" A–202

0 3" 6" 9"
Scale: 3" = 1'–0"

SYM	DESCRIPTION	DATE	APPR
0	ISSUED FOR CONSTRUCTION	10/28/2016	CBC

NAVFAC

REGISTERED ARCHITECT DONALD M. DYER No. 859 STATE OF MAINE 10/28/16

Colby Company engineering

APPROVED Donald W. Greenfield FOR COMMANDER NAVFAC

ACTIVITY: TIM FISHER C. 2370.6 BRANCH HEAD

SATISFACTORY TO DATE 10/28/2016

DES GJN DRW GJN CHK DMD

PMDM PETER STOCKLESS

BRANCH MANAGER IAN BODWELL

FEAD/PMAE AMIN BAHROUR

FIRE PROTECTION PATRICK BAKAJ

DEPARTMENT OF THE NAVY
NAVAL FACILITIES ENGINEERING COMMAND
PUBLIC WORKS DEPARTMENT - MAINE

NAVAL FACILITIES ENGINEERING COMMAND ~ MID-ATLANTIC
NAVAL SHIPYARD - PORTSMOUTH, NH

PORTSMOUTH NAVAL SHIPYARD
KITTERY, ME

DRY DOCK #1 DEFUELING COMPLEX
DRE-7

ROOF DETAILS

EPROJECT NO.: 1363311

CONSTR. CONTR. NO. N40085-17-C-5002

NAVFAC DRAWING NO. 12735047

SHEET 76 OF 117

A-504 | DD1-16-1128

DRAWFORM REVISION: 10 OCTOBER 2014

10/28/2016 7:07:32 AM X:\297 PORTSMOUTH NAVAL SHIPYARD\297.005.001 - DD#1 DEFUELING COMPLEX DESIGN\DRAWINGS\DRE7\SHEETS\A-504.DWG

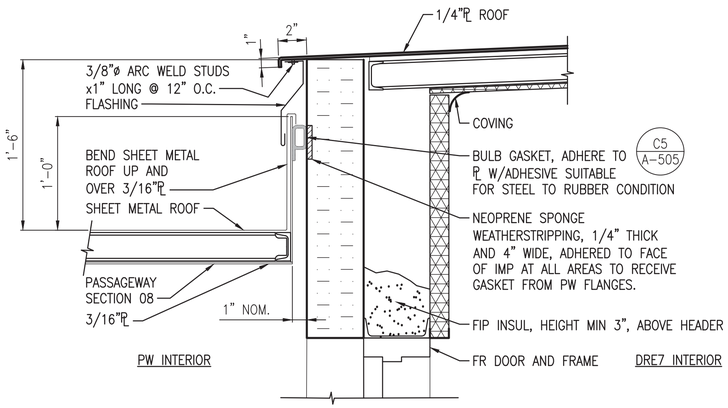

CONNECTION DETAIL PW 08 ROOF TO DRE7 WALL (D1)

SCALE: 1 1/2" = 1'-0" A-202, A-202A, A-601

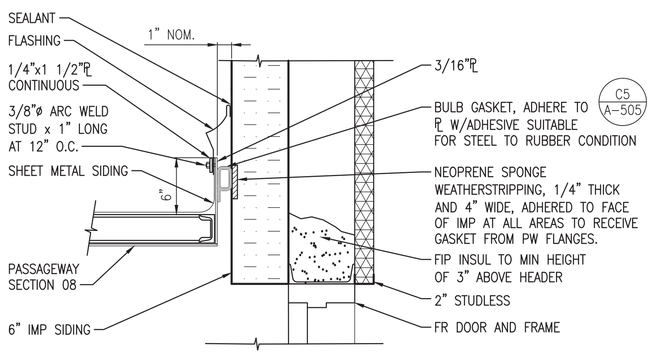

CONNECTION DETAIL PW 08 AT DRE7 WALL (C1)

SCALE: 1 1/2" = 1'-0" A-202, A-202A, A-601

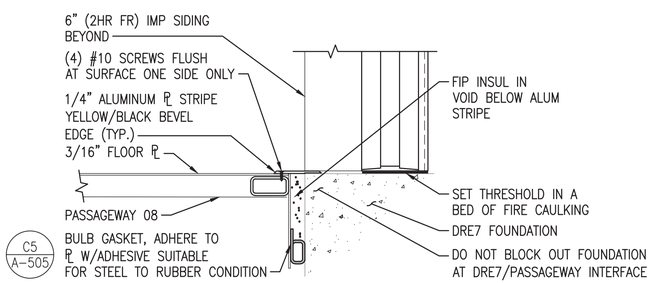

CONNECTION DETAIL AT DOOR SILL PW08 TO DRE7 (A1)

SCALE: 1 1/2"=1'-0" A-202, A-202A, A-601

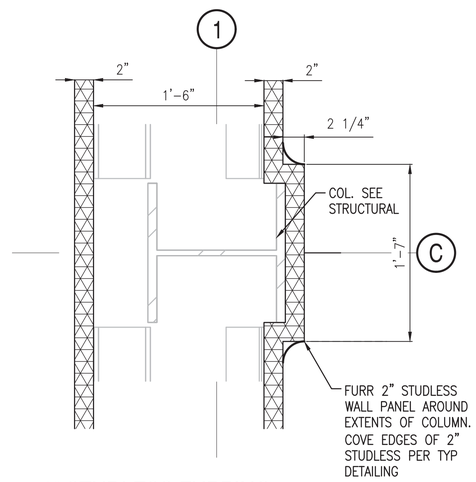

2" STUDLESS FURRING PLAN SECTION (C3)

SCALE: 1-1/2"=1'-0" A-100A

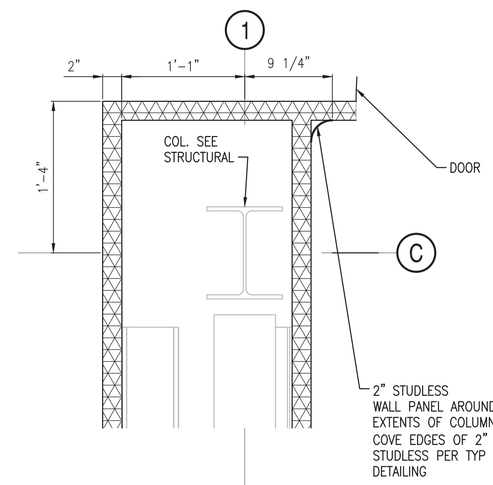

PLAN SECTION (C4)

SCALE: 1-1/2"=1'-0" A-100

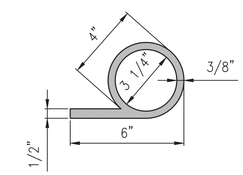

TYP. P BULB GASKET AT JOINT LINE ALL 4 SIDES OF INTERFACE (C5)

SCALE: 3"=1'-0" A-505

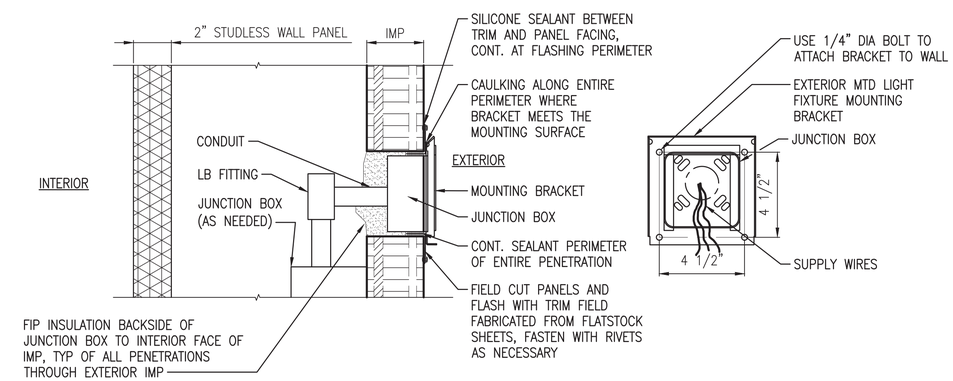

DETAIL NOTES:

1. FASTENERS SHALL BE OF SUFFICIENT SIZE, STRENGTH AND LENGTH IN ACCORDANCE INSULATED METAL PANELS REQUIREMENTS.
2. BED FASTENER IN SEALANT TO PROVIDE WEATHER-TIGHT JOINT. SEE SPECIFICATION SECTIONS 07 42 63 AND 07 92 00 FOR MORE INFORMATION
3. CUT PANEL FACINGS WITH DREMEL ROUTER OR SIM, CUT IMP CORE WITH SERRATED BREAD KNIFE. SPECIAL CARE SHOULD BE TAKEN TO PREVENT PANEL DELAMINATION.
4. DO NOT PENETRATE PANEL JOINERY, LOCATE PENETRATIONS ACCORDINGLY.
5. FIRE SEAL IF @ 6" (2 HR) IMP WALL

EXTERIOR MTD LIGHT BRACKET DETAIL (A3)

SCALE: 3"=1'-0"

NOTES

1. SEE DRAWING A-001 FOR GENERAL NOTES, ABBREVIATIONS AND LEGEND.
2. ALL ROOF EDGES TO OVERHANG 2" + THICKNESS OF MTL. PLATE ROOF AND BEND DOWN 1". THIS IS TO PREVENT WATER PENETRATION THROUGH THE TOP OF PANEL FLASHING AND PROTECT UPPER FASTENING LOCATION FROM WEATHER INFILTRATION.
3. UNLESS STATED OTHERWISE, FASTENER AND POP RIVET SPACING PER MANUFACTURER'S STANDARD REQUIREMENTS.

SYM	DESCRIPTION	DATE	APPR
0	ISSUED FOR CONSTRUCTION	10/28/2016	CBC

NAVFAC

REGISTERED ARCHITECT DONALD M. DYER No. 859 STATE OF MAINE 10/28/16

Colby Company engineering

A/E INFO

APPROVED Daniel W. Greenfield FOR COMMANDER NAVFAC

ACTIVITY TIM FISHER C. 2370.6 BRANCH HEAD

SATISFACTORY TO DATE 10/28/2016

DES GJN DRW GJN CHK DMD

PMDM PETER STOCKLESS

BRANCH MANAGER IAN BODWELL

FEA/PM&E AMIN BAHROUR

FIRE PROTECTION PATRICK BAKAJ

DEPARTMENT OF THE NAVY
NAVAL FACILITIES ENGINEERING COMMAND
PUBLIC WORKS DEPARTMENT - MAINE

NAVAL FACILITIES ENGINEERING COMMAND ~ MID-ATLANTIC
NAVAL SHIPYARD - PORTSMOUTH, NH

PORTSMOUTH NAVAL SHIPYARD
KITTERY, ME

DRY DOCK #1 DEFUELING COMPLEX DRE-7

WALL DETAILS

EPROJECT NO.: 1363311

CONSTR. CONTR. NO.: N40085-17-C-5002

NAVFAC DRAWING NO. 12735048

SHEET 77 OF 117

A-505 DD1-16-1129

Scale: 3" = 1'-0"

Scale: 1 1/2" = 1'-0"

DRAWFORM REVISION: 10 OCTOBER 2014

10/28/2016 7:07:40 AM X:\297 PORTSMOUTH NAVAL SHIPYARD\297.005.001 - DD#1 DEFUELING COMPLEX DESIGN\DRAWINGS\DRE7\SHEETS\A-505.DWG

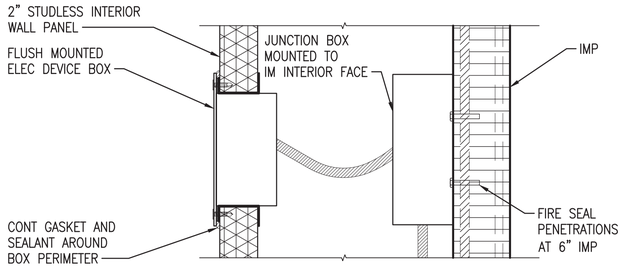

TYP FLUSH MOUNT ELEC SECTION (D1)

SCALE: 3"=1'-0"

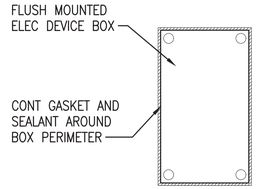

TYP FLUSH MOUNT ELEC ELEVATION (D2)

SCALE: 3"=1'-0"

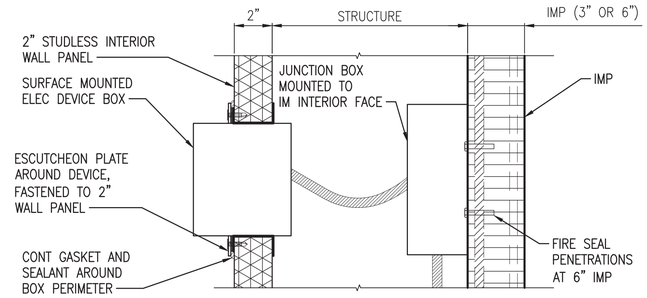

TYP SURFACE MOUNT ELEC SECTION (D3)

SCALE: 3"=1'-0"

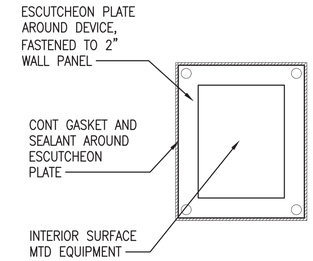

TYP FLUSH MOUNT ELEC ELEVATION (D4)

SCALE: 3"=1'-0"

NOTES:

1. SPECIAL ATTENTION TO BE GIVEN TO AIR AND WATER INFILTRATION PROTECTION AROUND ALL EXTERIOR PENETRATIONS, JOINTS, SEAMS AND EDGES.
2. ENCLOSURE IS DESIGNED TO BE AIRTIGHT IN ORDER TO SUPPORT NEGATIVE INTERIOR VENTILATION OF −0.15" +/− 0.05" WC. ALL INTERIOR PENETRATIONS TO BE SEALED APPROPRIATELY IN ORDER TO MEET NEGATIVE AIR PRESSURE REQUIREMENTS.
3. ALL PENETRATIONS THROUGH 6" IMP TO BE FIRE RATED. IF THROUGH 3" IMP PENETRATION IS UNRATED.
4. UNLESS STATED OTHERWISE, FASTENER AND POP RIVET SPACING PER MANUFACTURER'S STANDARD REQUIREMENTS.

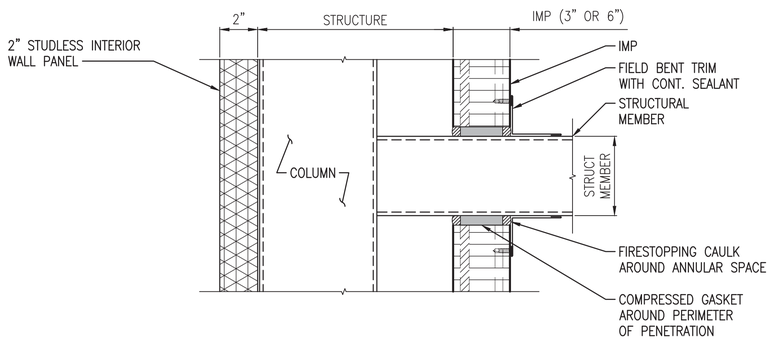

TYP STRUCTURAL PENETRATION SECTION (B1)

SCALE: 3"=1'-0"

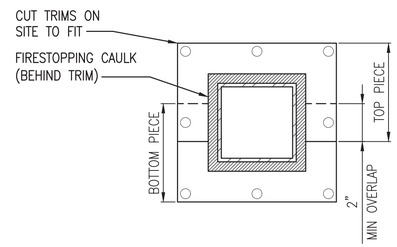

TYP STRUCTURAL PENETRATION ELEVATION (B3)

SCALE: 3"=1'-0"

A-201, A-201A, A-202, A-202A

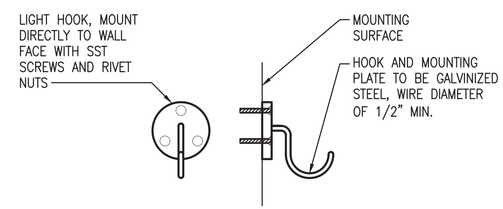

HOOK FOR HUNG LIGHTS (B4)

SCALE: 3"=1'-0"

B4 DETAIL NOTES:

1. 2" DIA HOOK FOR LIGHT FIXTURE SUPPORT
2. 4" DIA FOR CABLING WITHIN PASSAGEWAYS
3. SEE ELECTRICAL FOR SPACING OF HOOKS

MOUNTING GUIDANCE		
WEIGHT (LBS)	DEPTH	FASTENER TYPE
0–25	0 TO 6"	THIN PROFILE SHEET METAL TEK SCREWS
0–25	> 6"	HEAVY DUTY RIVET NUT TWIST RESISTANT
25–50	ALL CASES	HEAVY DUTY RIVET NUT TWIST RESISTANT

MOUNTING GUIDANCE NOTES:

1. MOUNTING GUIDANCE ASSUMES THAT ALL EQUIPMENT IS MOUNTED ON STUDLESS, HONEYCOMB PORTION OF WALL. WHENEVER POSSIBLE, EQUIPMENT SHOULD BE MOUNTED TO THE INTERIOR METAL PANEL'S INTERNAL RACEWAYS FOR ADDITIONAL STRUCTURAL SUPPORT.

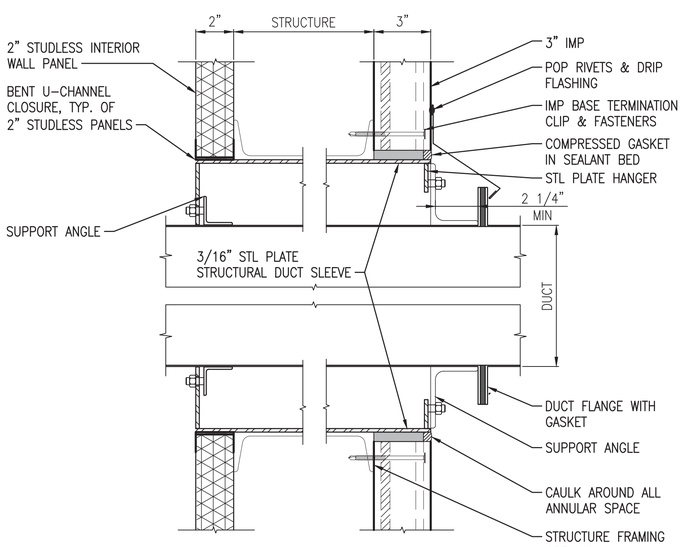

TYP NON-ENGINEERED DUCT PENETRATION SECTION (A1)

SCALE: 3"=1'-0"

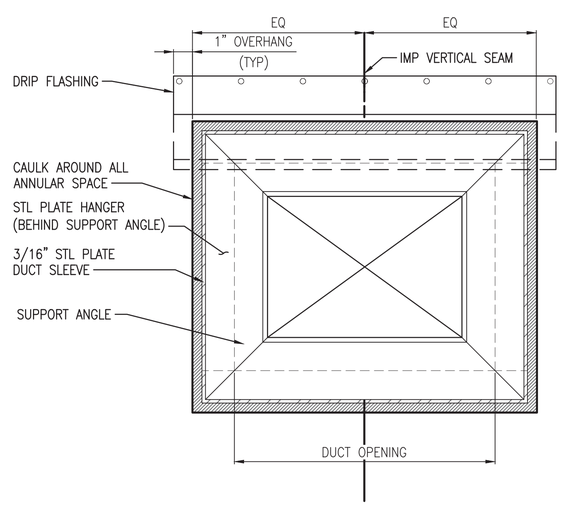

TYP NON-ENGINEERED DUCT PENETRATION ELEVATION (A3)

SCALE: 3"=1'-0"

0 3" 6" 9"
Scale: 3" = 1'-0"

SYM	DESCRIPTION	DATE	APPR
0	ISSUED FOR CONSTRUCTION	10/28/2016	CBC

NAVFAC

REGISTERED ARCHITECT DONALD M. DYER No. 859 STATE OF MAINE 10/28/16

Colby Company engineering

A/E INFO

APPROVED Commander Daniel W. Greenfield FOR COMMANDER NAVFAC

ACTIVITY: TIM FISHER C. 2370.6 BRANCH HEAD

SATISFACTORY TO DATE 10/28/2016

DES GJN DRW GJN CHK DMD

PM/DM PETER STOCKLESS

BRANCH MANAGER IAN BODWELL

FEAD/PM&E AMIN BAHROUR

FIRE PROTECTION PATRICK BAKAJ

DEPARTMENT OF THE NAVY
NAVAL FACILITIES ENGINEERING COMMAND
PUBLIC WORKS DEPARTMENT - MAINE

NAVAL FACILITIES ENGINEERING COMMAND – MID-ATLANTIC
NAVAL SHIPYARD - PORTSMOUTH, NH

PORTSMOUTH NAVAL SHIPYARD
KITTERY, ME

DRY DOCK #1 DEFUELING COMPLEX
DRE-7

PENETRATION DETAILS

EPROJECT NO.: 1363311

CONSTR. CONTR. NO. N40085-17-C-5002

NAVFAC DRAWING NO. 12735049

SHEET 78 OF 117

A-506 DD1-16-1130

DRAWFORM REVISION: 10 OCTOBER 2014

10/28/2016 7:07:48 AM X:\297 PORTSMOUTH NAVAL SHIPYARD\297.005.001 - DDH DEFUELING COMPLEX DESIGN\DRAWINGS\DRE7\SHEETS\A-506.DWG

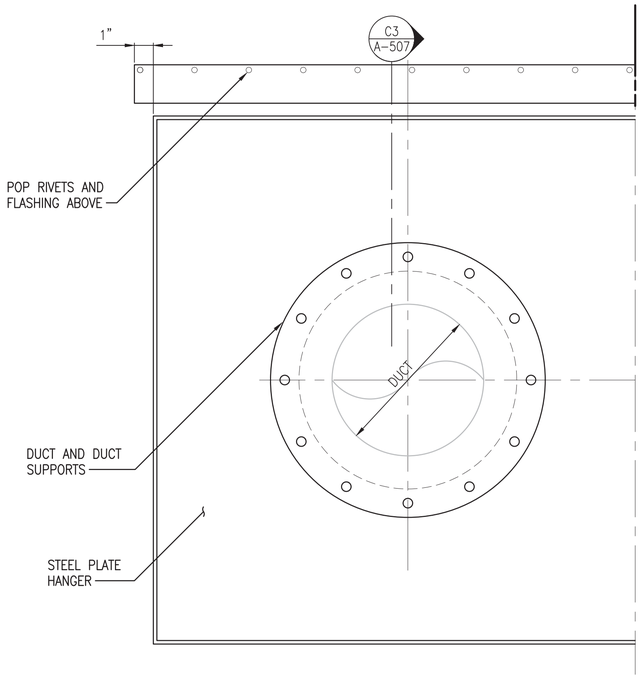

TYP ENGINEERED DUCT PENETRATION ELEVATION (C1)

SCALE: 3"=1'-0"

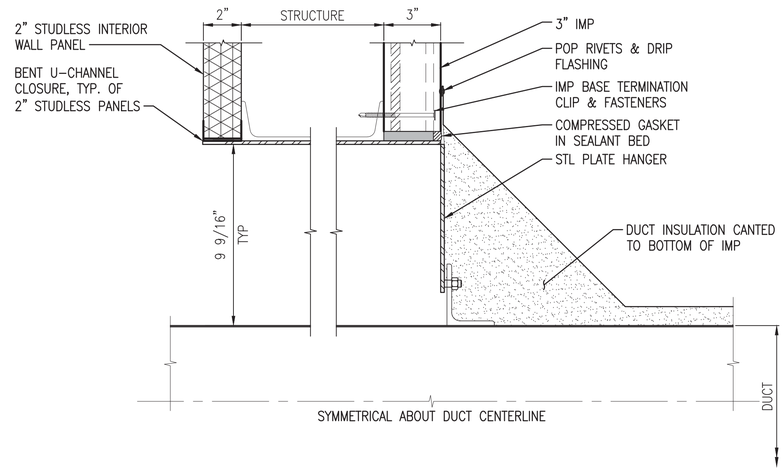

TYP ENGINEERED DUCT PENETRATION SECTION (C3)

SCALE: 3"=1'-0" A-507

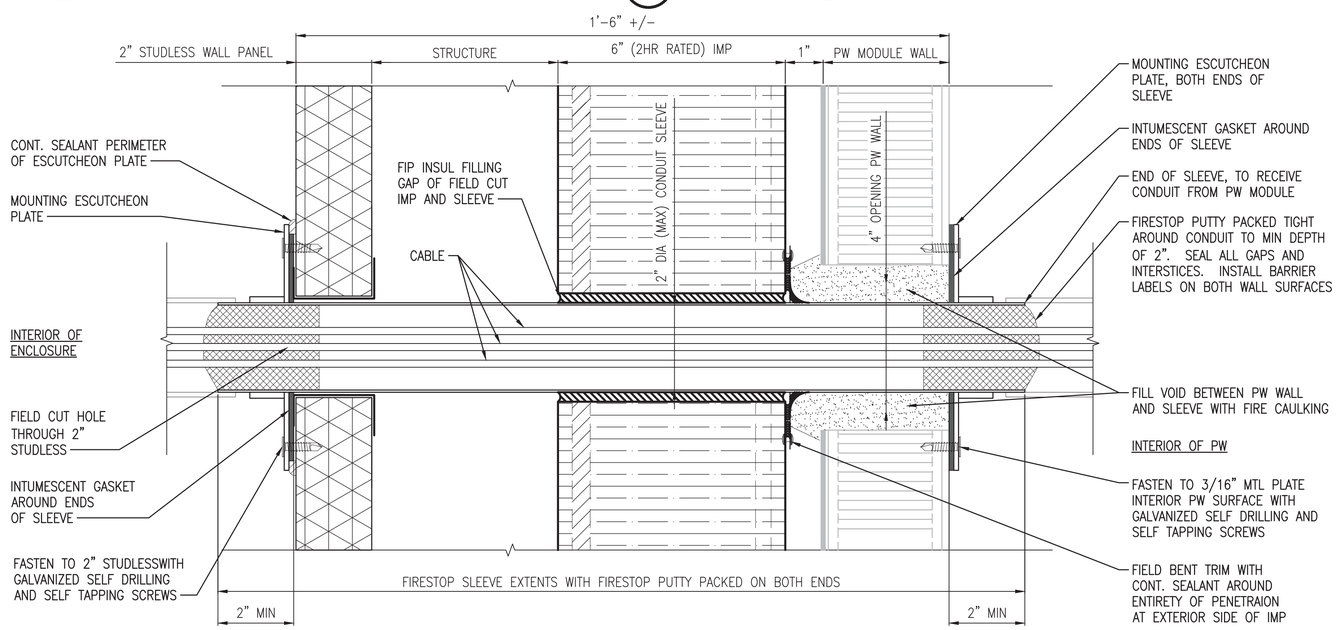

DETAIL NOTE: FIRESTOP SLEEVE TO BE INSTALLED FIRST WITHIN ENCLOSURE WALL ASSEMBLY AND HAVE ENOUGH LENGTH ON EXTERIOR SIDE TO PENETRATE THROUGH PASSAGEWAY MODULE WALL OPENING WHEN BOTH ENCLOSURES AND PASSAGEWAY MODULES ARE IN FINAL RESPECTIVE LOCATIONS ON THE SITE. PASSAGEWAY WALL OPENING MAY BE FIELD LOCATED IF NECESSARY IN ORDER TO PROVIDE BEST COORDINATION WITH LOCATION OF FIRESTOP SLEEVE FROM ENCLOSURE SIDE.

TYP CONDUIT SLEEVE PENETRATION SECTION (A1)

SCALE: 6"=1'-0"

NOTES:

1. SPECIAL ATTENTION TO BE GIVEN TO AIR AND WATER INFILTRATION PROTECTION AROUND ALL EXTERIOR PENETRATIONS, JOINTS, SEAMS AND EDGES.
2. ENCLOSURE IS DESIGNED TO BE AIRTIGHT IN ORDER TO SUPPORT NEGATIVE INTERIOR VENTILATION OF −0.15" +/− 0.05" WC. ALL INTERIOR PENETRATIONS TO BE SEALED APPROPRIATELY IN ORDER TO MEET NEGATIVE AIR PRESSURE REQUIREMENTS.
3. ALL PENETRATIONS THROUGH 6" IMP TO BE FIRE RATED. IF THROUGH 3" IMP PENETRATION IS UNRATED.
4. UNLESS STATED OTHERWISE, FASTENER AND POP RIVET SPACING PER MANUFACTURER'S STANDARD REQUIREMENTS.

MOUNTING GUIDANCE		
WEIGHT (LBS)	DEPTH	FASTENER TYPE
0–25	0 TO 6"	THIN PROFILE SHEET METAL TEK SCREWS
0–25	> 6"	HEAVY DUTY RIVET NUT TWIST RESISTANT
25–50	ALL CASES	HEAVY DUTY RIVET NUT TWIST RESISTANT

MOUNTING GUIDANCE NOTES:

1. MOUNTING GUIDANCE ASSUMES THAT ALL EQUIPMENT IS MOUNTED ON STUDLESS, HONEYCOMB PORTION OF WALL. WHENEVER POSSIBLE, EQUIPMENT SHOULD BE MOUNTED TO THE INTERIOR METAL PANEL'S INTERNAL RACEWAYS FOR ADDITIONAL STRUCTURAL SUPPORT.

0 6" 12" 18"
Scale: 6" = 1'-0"

SYM	DESCRIPTION	DATE	APPR
0	ISSUED FOR CONSTRUCTION	10/28/2016	CBC

NAVFAC

REGISTERED ARCHITECT DONALD M. DYER No. 859 STATE OF MAINE 10/28/16

Colby Company engineering

A/E INFO

APPROVED (CONTRACTING OFFICER) David W. Greenfield
FOR COMMANDER NAVFAC

ACTIVITY: TIM FISHER, C. 2370.6 BRANCH HEAD

SATISFACTORY TO DATE 10/28/2016

DES GJN DRW GJN CHK DMD

PMDM PETER STOCKLESS

BRANCH MANAGER IAN BODWELL

FEA/PM&E AMIN BAHROUR

FIRE PROTECTION PATRICK BAKAJ

DEPARTMENT OF THE NAVY
NAVAL FACILITIES ENGINEERING COMMAND
PUBLIC WORKS DEPARTMENT - MAINE

NAVAL FACILITIES ENGINEERING COMMAND ~ MID-ATLANTIC
NAVAL SHIPYARD - PORTSMOUTH, NH

PORTSMOUTH NAVAL SHIPYARD
KITTERY, ME

DRY DOCK #1 DEFUELING COMPLEX
DRE-7

PENETRATION DETAILS

EPROJECT NO.: 1363311

CONSTR. CONTR. NO. N40085-17-C-5002

NAVFAC DRAWING NO. 12735050

SHEET 79 OF 117

A-507 DD1-16-1131

DRAWFORM REVISION: 10 OCTOBER 2014

10/28/2016 7:07:54 AM X:\297 PORTSMOUTH NAVAL SHIPYARD\297.005.001 - DD#1 DEFUELING COMPLEX DESIGN\DRAWINGS\DRE7\SHEETS\A-507.DWG

FINISH SCHEDULE

LEVEL	ROOM	FLOORS	CEILING	WALLS	NOTES
GROUND LEVEL	ENTRY / ELEC PANEL ROOM	EPOXY CONCRETE	1/2" MTL LINER PANEL	2" STUDLESS	
GROUND LEVEL	STORAGE	EPOXY CONCRETE	1/2" MTL LINER PANEL	2" STUDLESS	(2) ROOF HATCHES ABOVE
GROUND LEVEL	TOWER	EPOXY CONCRETE	OPEN TO ABOVE	2" STUDLESS	MOVABLE ROOF ABOVE, 1/2" MTL LINER PANEL UNDERSIDE OF STRUCTURE

DOOR SCHEDULE

ID	LOCATION	TYPE	HEIGHT	WIDTH	THICK NESS	DOOR MATL	GLAZING	FRAME MATL	FRAME TYPE	FRAME DEPTH	HEADER	JAMB	SILL	FIRE LABEL	HDWR SET	ACCESSORIES	REMARKS
001	S. EXIT	A	7'–0"	3'–0"	1 3/4"	HM	–	HM	F1	6 3/4"	C5/A–602	B5/A–602	A5/A–602	–	4		
002	BUMPOUT	G	7'–0"	3'–0"	1 3/4"	HM	–	HM	F1	6 3/4"	D1/A–505	C1/A–505	A1/A–505	90MIN	9		DOOR TO / FROM PASSAGEWAY, SEE DOOR NOTE 1
003	TELESCOPING DOOR	E	10'–0"	8'–0"	1"	STL	–	STL	F3	–	C1/A–602	B1/A–602	A1/A–602	–	2		
004	TELESCOPING DOOR	E	9'–0"	8'–6"	1"	STL	–	STL	F3	–	C2/A–602	B2/A–602	A2/A–602	–	2		ISO CONTAINER DOOR WITH WEATHERSEALING GASKETED EXTERIOR FRAME
005	ENTRANCE	G	7'–0"	3'–0"	2"	SIWS	Y	ALUM	F2	2"	–	–	–	–	3A		2" STUDLESS DOOR, MAGNETIC LOCK, SEE DOOR NOTE 1 AND 2
101	LOWER ROOF (EXTERIOR)	H	12'–0"	12'–0"	1"	STL	–	STL	F5	–	–	A2/A–603	–	–	2		LOCKABLE FROM EXTERIOR
102	LOWER ROOF (EXTERIOR)	H	12'–0"	12'–0"	1"	STL	–	STL	F5	–	–	A2/A–603	–	–	2		LOCKABLE FROM EXTERIOR
CR1	DRE–7 CRANE PLATFORM	A	3'–10"	3'–0"	1 3/4"	HM	–	HM	F1	6 3/4"	C1/A–603	B1/A–603	A1/A–603	–	3A		INTEGRAL SAFETY GATE SEE A–102

ABBREVIATIONS

HM – HOLLOW METAL
MTL – METAL
STL – STEEL
SIWS – STUDLESS INTERIOR WALL SYSTEM (SEE NOTE 1)

PAINT SPECIFICATION TABLE

PAINT LOCATION	SUBSTRATE	SURFACE PREPARATION	PRIMER	TOP COAT	COLOR
EXTERIOR – ALL SURFACES, EXCEPT IMP OR AS NOTED	CARBON STEEL	SSPC–10	PPG AMERLOCK 2 (OR APPROVED EQUAL) 4–6 MILS DFT	PPG AMERLOCK 2 (OR APPROVED EQUAL) 4–6 MILS DFT	WHITE
EXTERIOR – PLATFORM STEEL	CARBON STEEL	SSPC–10	PPG AMERLOCK 2 (OR APPROVED EQUAL) 4–6 MILS DFT	PPG AMERLOCK 2 (OR APPROVED EQUAL) 4–6 MILS DFT	WHITE
EXTERIOR – HANDRAIL	CARBON STEEL	SSPC–6	PPG AMERLOCK 2 (OR APPROVED EQUAL) 4–6 MILS DFT	PPG AMERLOCK 2 (OR APPROVED EQUAL) 4–6 MILS DFT	WHITE
EXTERIOR – LADDERS	CARBON STEEL	SSPC–6	PPG AMERLOCK 2 (OR APPROVED EQUAL) 4–6 MILS DFT	PPG AMERLOCK 2 (OR APPROVED EQUAL) 4–6 MILS DFT	WHITE
EXTERIOR – PLATFORM GRATING	CARBON STEEL				GALVANIZED
EXTERIOR – MOVABLE ROOF NON SKID WALKING SURFACES	CARBON STEEL	SSPC–10	PPG AMERLOCK 2 (OR APPROVED EQUAL) 4–6 MILS DFT	PPG AMERLOCK 2 (OR APPROVED EQUAL) 4–6 MILS DFT, WITH NON SKID ADDITIVE	WHITE
EXTERIOR – MOVABLE ROOF RAILS (DRIVE MOTOR CONTACT SURFACES)	CARBON STEEL	PREPARE RAIL SURFACES IN ACCORDANCE WITH GEAR MOTOR MANUFACTURER'S REQUIREMENTS.			
EXTERIOR – PERSONNEL DOORS	CARBON STEEL	PER DOOR MANUFACTURERS SPEC.	PPG AMERLOCK 2 (OR APPROVED EQUAL) 2–4 MILS DFT	PPG AMERLOCK 2 (OR APPROVED EQUAL)2–4 MILS DFT	WHITE/RED SEE NOTE 1
TELESCOPING DOORS	CARBON STEEL				GALVANIZED
INTERIOR NON EXPOSED STRUCTURAL STEEL	CARBON STEEL	SSPC–2	PPG AMERLOCK 2 (OR APPROVED EQUAL)2–4 MILS DFT	NONE	ANY
INTERIOR – HVAC GRILLS	CARBON STEEL OR ALUMINUM	SSPC–6	PPG AMERLOCK 2 (OR APPROVED EQUAL)4–6 MILS DFT	PPG AMERLOCK 2 (OR APPROVED EQUAL)4–6 MILS DFT	WHITE
IMP TRIM AND EXTERIOR FLASHING, 26 GAGE	GALVANIZED SHEET STEEL	PER MANUFACTURERS SPEC.		KYNAR 500 FINISH	WHITE

PAINT NOTES:
1. ALL DOORS THAT EXIT TO EXTERIOR ARE TO BE PAINTED RED ON EXTERIOR FACING SIDE.

GENERAL NOTES

1. SEE DRAWING A–001 FOR GENERAL NOTES, ABBREVIATIONS AND LEGEND.
2. ENSURE AIRTIGHT AND CONTINUOUS SEAL AROUND ALL JOINTS, CORNERS AND EDGES OF INTERIOR FINISH SYSTEM. INTERIOR WORKING ENVIRONMENT TO BE UNDER NEGATIVE PRESSURE AND AIR TIGHTNESS OF INTERIOR FINISH FACES IS ESSENTIAL FOR OPERATIONS. SEE SPECIFICATION SECTION 097300 FOR DETAILED REQUIREMENTS.

DOOR NOTES

1. DOOR LOUVER TO BE 90MIN FIRE–RATED WITH FUSIBLE LINK REMOVABLE FRAMED SCREEN. SEE B2/A–603 AND SEE MECHANICAL.
2. ALL INTERIOR DOORS TO BE PART OF 2" STUDLESS INTERIOR WALL SYSTEM AND BE PROVIDED BY WALL SYSTEM MANUFACTURER. SEE SPEC SECTION 09 73 00 FOR ADDITIONAL DETAILS ON THESE INTERIOR DOORS.

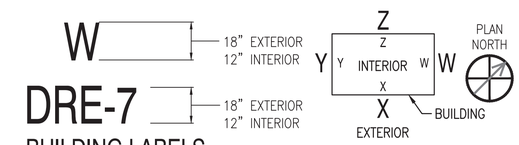

BUILDING LABELS
SCALE: NTS
A–201, A–201A, A–202, A–202A, A–301, A–301A, A–302 (C4)

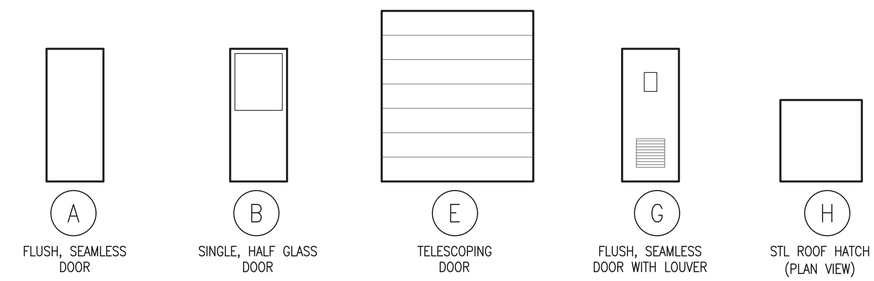

DOOR TYPES
SCALE: NTS
(B4)

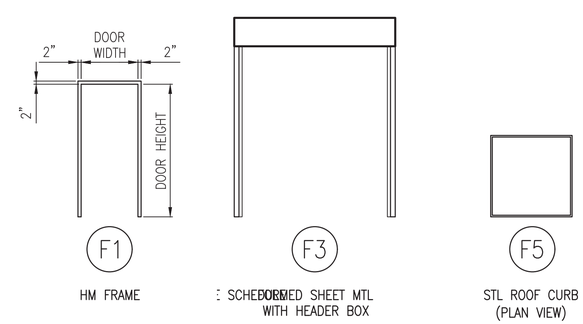

FRAME TYPES
SCALE: NTS
(A4)

SYM	DESCRIPTION	DATE	APPR
0	ISSUED FOR CONSTRUCTION	10/28/2016	CBC

NAVFAC

REGISTERED ARCHITECT DONALD M. DYER No. 859 STATE OF MAINE 10/28/16

Colby Company engineering

A/E INFO

APPROVED
Daniel W. Greenfield
FOR COMMANDER NAVFAC

ACTIVITY: TIM FISHER C. 2370.6 BRANCH HEAD
SATISFACTORY TO DATE 10/28/2016
DES GJN DRW GJN CHK DMD
PMDM: PETER STOCKLESS
BRANCH MANAGER: IAN BODWELL
FEADPM&E: AMIN BAHROUR
FIRE PROTECTION: PATRICK BAKAJ

DEPARTMENT OF THE NAVY
NAVAL FACILITIES ENGINEERING COMMAND
PUBLIC WORKS DEPARTMENT, MAINE
NAVAL FACILITIES ENGINEERING COMMAND ~ MID-ATLANTIC
NAVAL SHIPYARD, PORTSMOUTH, NH
PORTSMOUTH NAVAL SHIPYARD
KITTERY, ME
DRY DOCK #1 DEFUELING COMPLEX
DRE-7
ROOM FINISH AND DOOR SCHEDULES

EPROJECT NO.: 1363311
CONSTR. CONTR. NO. N40085-17-C-5002
NAVFAC DRAWING NO. 12735051
SHEET 80 OF 117
A-601 | DD1-16-1132

DRAWFORM REVISION: 10 OCTOBER 2014

10/28/2016 7:08:05 AM X:\297 PORTSMOUTH NAVAL SHIPYARD\297.005.001 - DD#1 DEFUELING COMPLEX DESIGN\DRAWINGS\DRE7\SHEETS\A-601.DWG

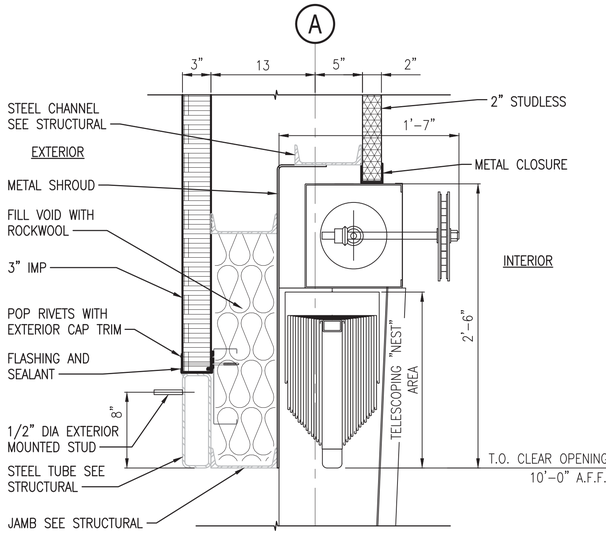

DOOR 003 TELESCOPING DOOR HEADER (C1)

SCALE: 1" = 1'-0" A-303, A-601

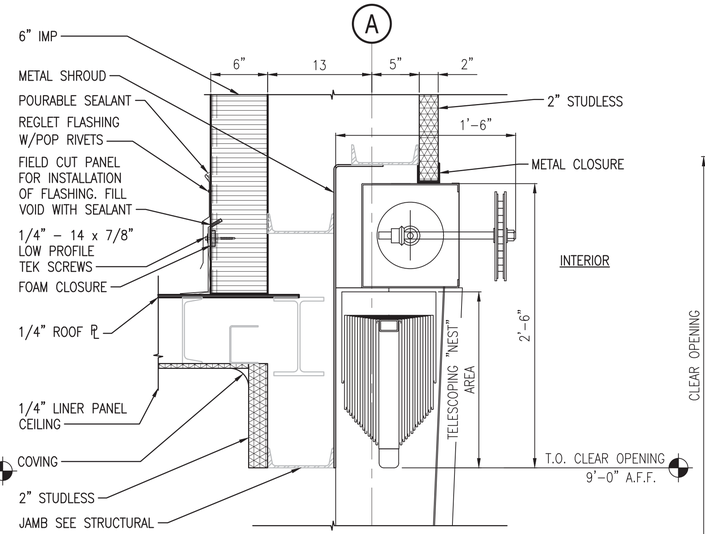

DOOR 004 TELESCOPING DOOR HEADER (C2)

SCALE: 1" = 1'-0" A-303, A-601

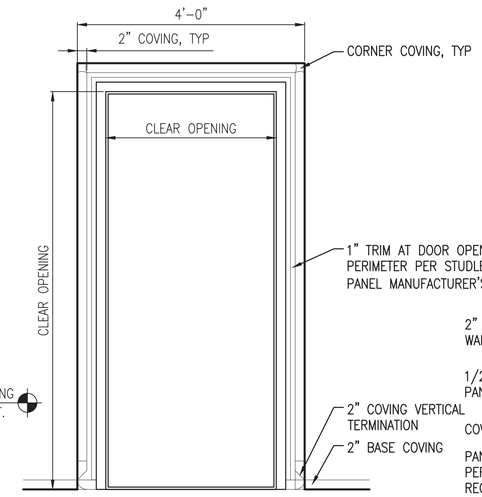

DOOR 001 AND DOOR 002 ELEVATION (C3)

SCALE: 3/4" = 1'-0"

NOTES

1. SEE DRAWING A-001 FOR GENERAL NOTES, ABBREVIATIONS AND LEGEND.
2. TRIM SEAL TO AVOID INTERFERENCES WHILE MAINTAINING PROPER AIR SEAL. SEALS SHALL MAINTAIN CONTACT WITH ISO CONTAINER AT ALL TIMES.
3. UNLESS STATED OTHERWISE, FASTENER AND POP RIVET SPACING PER MANUFACTURER'S STANDARD REQUIREMENTS.

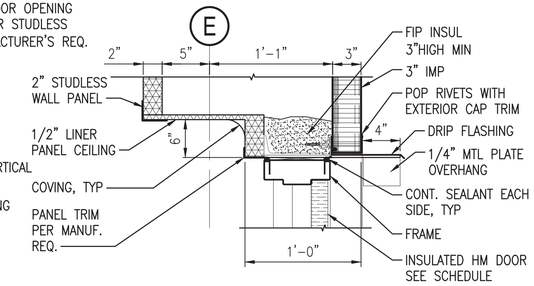

DOOR 001 HEADER, 3" IMP (C5)

SCALE: 1-1/2" = 1'-0" A-601

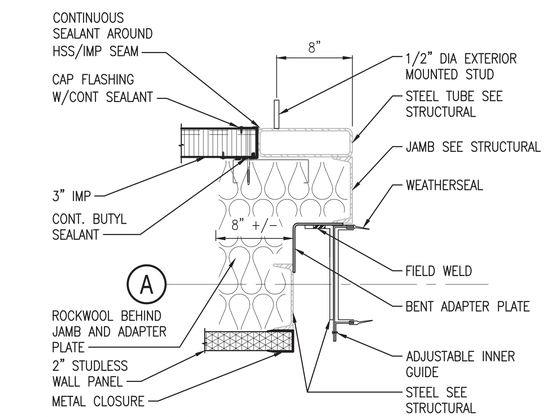

DOOR 003 TELESCOPING DOOR JAMB (B1)

SCALE: 1-1/2" = 1'-0" A-303, A-601

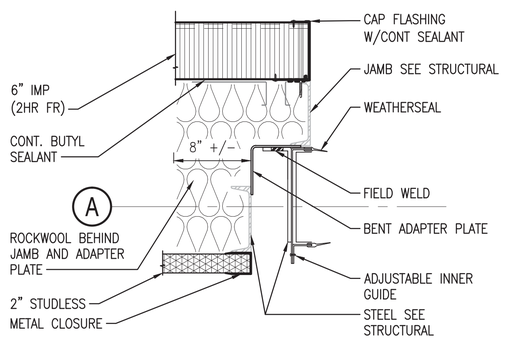

DOOR 004 TELESCOPING DOOR JAMB (B2)

SCALE: 1-1/2" = 1'-0" A-303, A-601

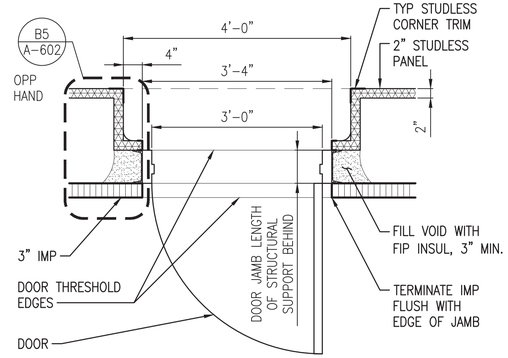

DOOR 001 PARTIAL PLAN SECTION (B3)

SCALE: 3/4" = 1'-0"

DETAIL NOTE FOR C3 AND B3:
INTENT OF DETAILS IS TO SHOW TYPICAL FINISHING OF 2" STUDLESS INTERIOR PANEL AT DOOR LEADING TO EXTERIOR.

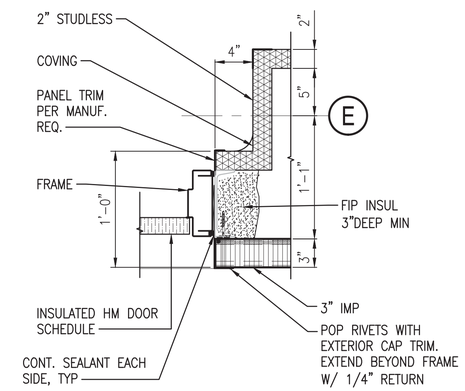

DOOR 001 JAMB, 3" IMP (B5)

SCALE: 1-1/2" = 1'-0" A-601, A-602

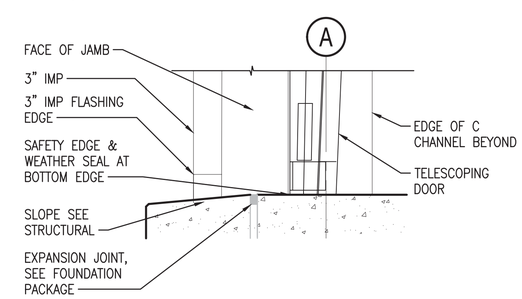

DOOR 003 TELESCOPING DOOR SILL (A1)

SCALE: 1-1/2" = 1'-0" A-303, A-601

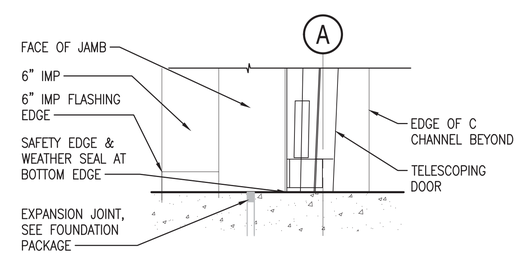

DOOR 004 TELESCOPING DOOR SILL (A2)

SCALE: 1-1/2" = 1'-0" A-303, A-601

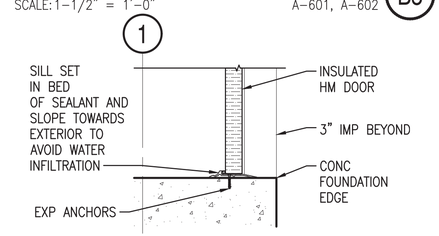

DOOR 001 SILL, 3" IMP (A5)

SCALE: 1-1/2" = 1'-0" A-601

0 1' 2' 3'
Scale: 3/4" = 1'-0"
0 1/2' 1' 2'
Scale: 1" = 1'-0"
0 1/2' 1' 1 1/2'
Scale: 1 1/2" = 1'-0"

SYM	DESCRIPTION	DATE	APPR
0	ISSUED FOR CONSTRUCTION	10/28/2016	CBC

NAVFAC

REGISTERED ARCHITECT DONALD M. DYER No. 859 STATE OF MAINE 10/28/16

Colby Company engineering

A/E INFO

APPROVED
Daniel W. Greenfield
FOR COMMANDER NAVFAC

ACTIVITY: TIM FISHER C. 2370.6 BRANCH HEAD

SATISFACTORY TO DATE 10/28/2016

DES GJN DRW GJN CHK DMD

PMDM: PETER STOCKLESS

BRANCH MANAGER: IAN BODWELL

FEAD/PM&E: AMIN BAHROUR

FIRE PROTECTION: PATRICK BAKAJ

DEPARTMENT OF THE NAVY
NAVAL FACILITIES ENGINEERING COMMAND
PUBLIC WORKS DEPARTMENT - MAINE

NAVAL FACILITIES ENGINEERING COMMAND ~ MID-ATLANTIC
NAVAL SHIPYARD - PORTSMOUTH, NH

PORTSMOUTH NAVAL SHIPYARD
KITTERY, ME

DRY DOCK #1 DEFUELING COMPLEX
DRE-7

DOOR DETAILS

EPROJECT NO.: 1363311

CONSTR. CONTR. NO. N40085-17-C-5002

NAVFAC DRAWING NO. 12735052

SHEET 81 OF 117

A-602 | DD1-16-1133

DRAWFORM REVISION: 10 OCTOBER 2014

10/28/2016 7:08:18 AM X:\297 PORTSMOUTH NAVAL SHIPYARD\297.005.001 - DD#1 DEFUELING COMPLEX DESIGN\DRAWINGS\DRE7\SHEETS\A-602.DWG

NOTES

1. SEE DRAWING A–001 FOR GENERAL NOTES, ABBREVIATIONS AND LEGEND.
2. TRIM SEAL TO AVOID INTERFERENCES WHILE MAINTAINING PROPER AIR SEAL. SEALS SHALL MAINTAIN CONTACT WITH ISO CONTAINER AT ALL TIMES.
3. UNLESS STATED OTHERWISE, FASTENER AND POP RIVET SPACING PER MANUFACTURER'S STANDARD REQUIREMENTS.

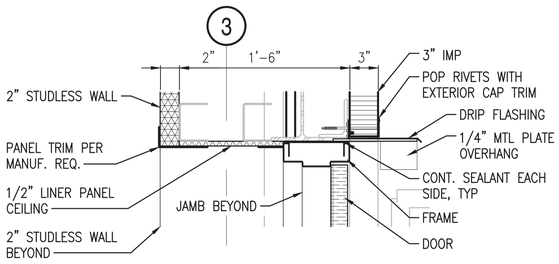

DOOR CR1 HEADER (C1)

SCALE: 1 1/2" = 1'–0" A–601

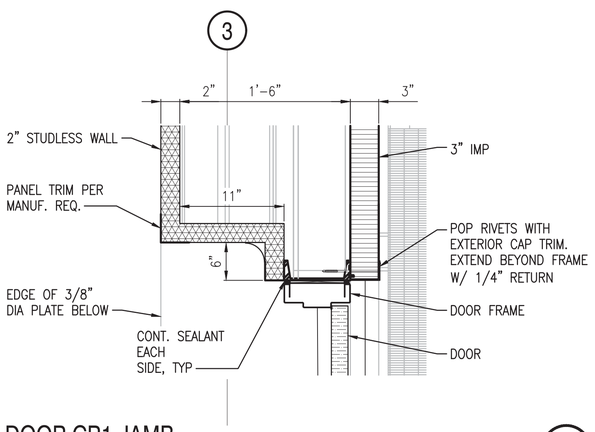

DOOR CR1 JAMB (B1)

SCALE: 1–1/2" = 1'–0" A–601

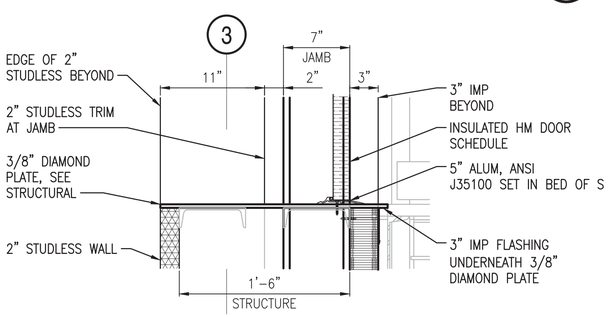

DOOR CR1 SILL (A1)

SCALE: 1–1/2" = 1'–0" A–601

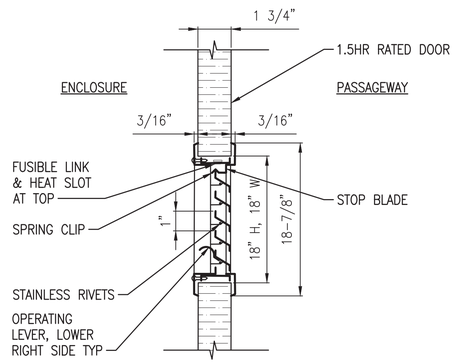

DOOR FUSIBLE LINK LOUVER DETAIL (B2)

SCALE: 3" = 1'–0"

NOTES:
1. ANEMOSTAT FLDL–UL OR APPROVED EQUAL
2. COORDINATE WITH MECHANICAL DETAILS FOR DOOR MOUNTED DAMPER AND FILTER.

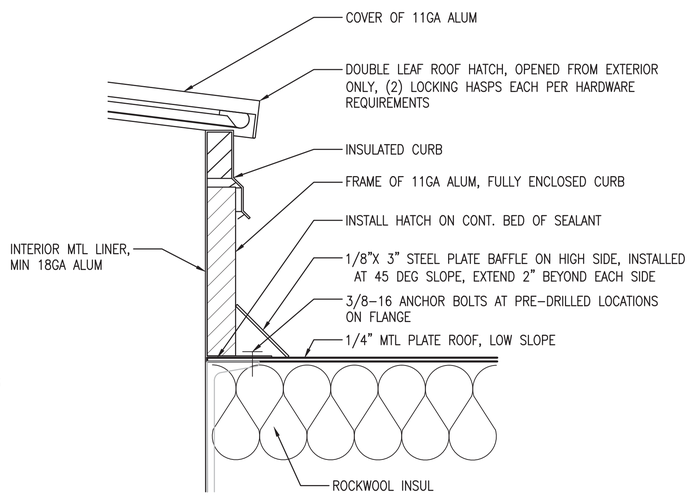

ROOF CURB, TYP (A2)

SCALE: 3" = 1'–0" A–502, A–601

0 3" 6" 9"
Scale: 3" = 1'–0"

0 1/2' 1' 1 1/2'
Scale: 1 1/2" = 1'–0"

SYM	DESCRIPTION	DATE	APPR
0	ISSUED FOR CONSTRUCTION	10/28/2016	CBC

NAVFAC

REGISTERED ARCHITECT DONALD M. DYER No. 859 STATE OF MAINE 10/28/16

Colby Company engineering

A/E INFO

APPROVED Daniel W. Greenfield
FOR COMMANDER NAVFAC

ACTIVITY: TIM FISHER C. 2370.6 BRANCH HEAD

SATISFACTORY TO DATE 10/28/2016

DES GJN DRW GJN CHK DMD

PMDM PETER STOCKLESS

BRANCH MANAGER IAN BODWELL

FEAD/PM&E AMIN BAHROUR

FIRE PROTECTION PATRICK BAKAJ

DEPARTMENT OF THE NAVY
NAVAL FACILITIES ENGINEERING COMMAND
PUBLIC WORKS DEPARTMENT - MAINE

NAVAL FACILITIES ENGINEERING COMMAND ~ MID-ATLANTIC
NAVAL SHIPYARD - PORTSMOUTH, NH

PORTSMOUTH NAVAL SHIPYARD
KITTERY, ME

DRY DOCK #1 DEFUELING COMPLEX
DRE-7

DOOR DETAILS

EPROJECT NO.: 1363311

CONSTR. CONTR. NO. N40085-17-C-5002

NAVFAC DRAWING NO. 12735053

SHEET 82 OF 117

A-603 DD1-16-1134

DRAWFORM REVISION: 10 OCTOBER 2014

10/28/2016 7:08:28 AM X:\297 PORTSMOUTH NAVAL SHIPYARD\297.005.001 - DD#1 DEFUELING COMPLEX DESIGN\DRAWINGS\DRE7\SHEETS\A-603.DWG

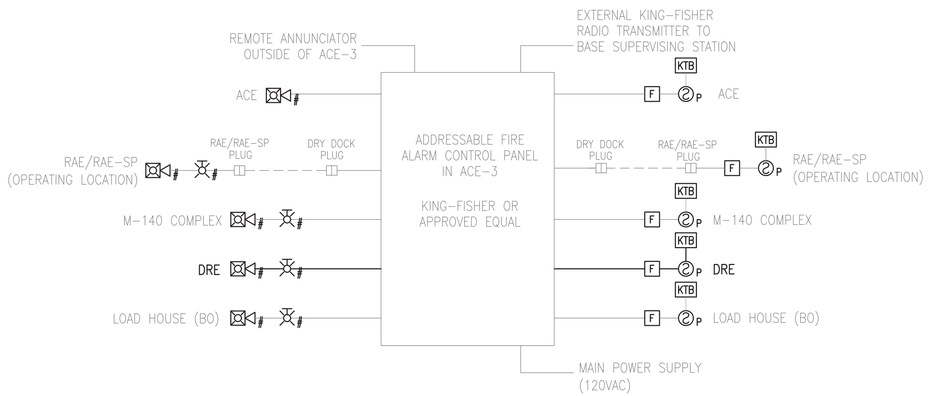

NOTES:
1. THIS SCHEMATIC IS FOR REQUIRED SYSTEM COMPONENT ILLUSTRATION ONLY. REFER TO SITE PLAN FA-101 FOR ZONING REQUIREMENTS AND THE FLOOR PLANS FOR EACH ENCLOSURE TO DETERMINE DEVICE QUANTITIES.

FIRE ALARM RISER DIAGRAM (C1)

SCALE: NTS

LEGEND

- F WP — FIRE ALARM MANUAL PULL STATION WEATHERPROOF
- P — SMOKE DETECTOR. CEILING MOUNTED
  - A – AUXILIARY CONTACT
  - H – HEAT/SMOKE
  - P – PHOTOELECTRIC SMOKE
  - PH – PHOTOELECTRIC/HEAT SMOKE
- P — SMOKE DETECTOR, WALL MOUNTED
  - P – PHOTOELECTRIC SMOKE
- WP — FIRE ALARM HORN/STROBE NOTIFICATION APPLIANCE (GENERAL EVACUATION) – CLEAR STROBE COLOR
  - WP – INDICATES WEATHER PROOF
  - 75 – INDICATES CANDELA INTENSITY
- 75 — FIRE ALARM VISIBLE ONLY (STROBE) NOTIFICATION APPLIANCE, CEILING MOUNTED, CLEAR STROBE
  - 75 – INDICATES CANDELA INTENSITY
- 75 — FIRE ALARM VISIBLE ONLY (STROBE) NOTIFICATION APPLIANCE, WALL MOUNTED, CLEAR STROBE
- AM I/O — FIRE ALARM ADDRESSABLE MODULE
  - I/O – INDICATES INPUT OR OUTPUT
- KTB — KEYED TEST BOX FOR REMOTE-MOUNTED AREA SMOKE DETECTORS PER PNSY STANDARDS

ABBREVIATIONS

AMP	AMPERE
AFF	ABOVE FINISHED FLOOR
AFG	ABOVE FINISHED GRADE
AHJ	AUTHORITY HAVING JURISDICTION
AIC	AMPERE INTERRUPTING CAPACITY
AWG	AMERICAN WIRE GAUGE
BFG	BELOW FINISHED GRADE
BLDG	BUILDING
BOS	BOTTOM OF STEEL
BO	BID OPTION
C	CONDUIT
CATV	CABLE TELEVISION
CB	CIRCUIT BREAKER
CCTV	CLOSED CIRCUIT TELEVISION
CT	CURRENT TRANSFORMER
CU	COPPER
DB	DIRECT BURIED
DISC	DISCONNECT
DN	DOWN
EMT	ELECTRICAL METALLIC TUBING
EWC	ELECTRIC WATER COOLER
EWH	ELECTRIC WATER HEATER
EQP	EQUIPMENT
EXIST	EXISTING
FAA	FIRE ALARM ANNUNCIATOR
FACP	FIRE ALARM CONTROL PANEL
FBO	FURNISHED BY OTHERS
FLR	FLOOR
FVNR	FULL VOLTAGE NON REVERSING
FWE	FURNISHED WITH EQUIPMENT
FU	FUSE
GEN	GENERATOR
GFCI	GROUND FAULT CIRCUIT INTERRUPT
CLG	CEILING
GND	GROUND
HP	HORSEPOWER
HTR	HEATER
IDC	INITIATING DEVICE CIRCUIT
IG	ISOLATED GROUND
IMC	INTERMEDIATE METAL CONDUIT
K	KILO
KA	KILO-AMP
KCMIL	THOUSAND CIRCULAR MILS
KV	KILOVOLT
KVA	KILOVOLT-AMPERE
KW	KILOWATT
KWH	KILOWATT-HOUR
LA	LIGHTNING ARRESTER
LTG	LIGHTING
MAX	MAXIMUM
MC	METAL CLAD
MCB	MAIN CIRCUIT BREAKER
MFR	MANUFACTURER
MLO	MAIN LUG ONLY
MTD	MOUNTED
MV	MEDIUM VOLTAGE
NAC	NOTIFICATION APPLIANCE CIRCUIT
NC	NORMALLY CLOSED
NEC	NATIONAL ELECTRIC CODE
NEG	NEGATIVE
NEUT	NEUTRAL
NIC	NOT IN CONTRACT
NO	NORMALLY OPEN
NTS	NOT TO SCALE
PH	PHASE
PV	PHOTOVOLTAIC
PVC	POLYVINYL CHLORIDE
RM	ROOM
RSC	RIGID STEEL CONDUIT
SWBD	SWITCHBOARD
TGB	TELECOMMUNICATIONS GROUNDING BUSBAR
TOS	TOP OF STEEL
TANSF	TRANSFORMER
TVSS	TRANSIENT VOLTAGE SURGE SUPPRESSER
V	VOLT
VA	VOLT-AMPERE
VFD	VARIABLE FREQUENCY DRIVE
WM	WATT METER
WP	WEATHER PROOF
XFMR	TRANSFORMER
XP	EXPLOSION PROOF

GENERAL NOTES

1. ALL GENERAL NOTES, SYMBOL LISTS AND DETAILS ARE TO BE CONSIDERED AS APPLICABLE TO ALL FIRE ALARM DRAWINGS FOR THIS PROJECT. SYMBOLS AND ABBREVIATIONS SHOWN ON THIS SHEET ARE FOR REFERENCE ONLY AND DO NOT INDICATE THEIR INCORPORATION IN THE DESIGN.
2. REFER TO SPECIFICATION SECTION 00 22 13.00 20 FOR A LIST OF BID OPTIONS FOR THIS PROJECT.
3. ALL WORK SHALL BE PERFORMED IN ACCORDANCE WITH UFC 3-600-10N FIRE PROTECTION ENGINEERING (FINAL DRAFT) AUGUST 2007, UFC 3-600-01 DESIGN FIRE PROTECTION ENGINEERING FOR FACILITIES 2013, NFPA-70, NATIONAL ELECTRICAL CODE (NEC) 2014, AND NFPA-72, NATIONAL FIRE ALARM AND SIGNALING CODE 2013.
4. SMOKE DETECTORS ARE NOT REQUIRED BY THE AHJ. PNSY HAS REQUESTED SMOKE DETECTORS IN CERTAIN SPECIFIC LOCATIONS, AND ACKNOWLEDGES THAT SPACING/COVERAGE WILL NOT MEET NFPA 72 REQUIREMENTS. SMOKE DETECTORS SHALL MEET ALL OTHER DESIGN AND INSTALLATION REQUIREMENTS OF NFPA 72.
5. A KING-FISHER INDUSTRIAL RADIO TRANSMITTER SHALL BE PROVIDED FOR RETRANSMISSION OF ALL SIGNALS TO THE FIRE STATION (BASE SUPERVISING STATION). THE FIRE STATION IS CONSTANTLY ATTENDED.
6. ALL FIRE ALARM CIRCUITS SHALL BE CLASS B AND INSTALLED IN CONDUIT.
7. PER PNSY INSTRUCTIONS, FIRE ALARM WIRING SHALL BE ROUTED INSIDE ENCLOSURES AND PASSAGEWAYS, EXCEPT FOR BETWEEN THE ACE AND RAE AND M-140 COMPLEX AND LOAD HOUSE, WHICH WILL HAVE OUTDOOR WIRING. REFER TO SITE AND RAE/RAE-SP FIRE ALARM DRAWINGS.
8. ALL NEW FIRE ALARM WIRING SHALL BE SOLID COPPER AND SIZED BY THE CONTRACTOR PER UFC 3-600-01. THE MINIMUM WIRE SIZE SHALL BE 16 GAUGE.
9. ALL CONDUCTOR TERMINATIONS MUST BE AT A TERMINAL STRIP. ALL DEVICES MUST HAVE SCREW TERMINALS.
10. PULL ALL CONDUCTORS SPLICE-FREE WHEREVER POSSIBLE. WHERE SPLICES ARE UNAVOIDABLE, PROVIDE INSULATED BARRIER TYPE TERMINAL STRIPS AT JUNCTION POINTS. THE USE OF WIRE NUTS, CRIMPED CONNECTORS, OR TWISTING OF CONDUCTORS IS PROHIBITED. RAE/RAE-SP DRAWINGS INDICATE AN APPROVED BOX MOUNT PLUG EXCEPTION THAT APPLIES TO THESE TWO ENCLOSURES ONLY.
11. UNLESS OTHERWISE INDICATED, FIRE ALARM PULL DEVICES SHALL BE MOUNTED 48-INCHES AFF, AND WALL-MOUNTED FIRE ALARM A/V NOTIFICATION APPLIANCES SHALL BE MOUNTED A MINIMUM OF 90-INCHES AFF AND/OR 6-INCHES BELOW A FINISHED CEILING.
12. ALL PENETRATIONS THROUGH FLOORS, RATED WALLS AND PARTITIONS SHALL BE SEALED WITH UL APPROVED FIRE SEALANT MATERIAL TO MAINTAIN THE RATING OF SEPARATION.
13. PROVIDE ALL MOUNTING HARDWARE NECESSARY FOR A COMPLETE INSTALLATION. MOUNT DEVICES AND ROUTE WIRING SO AS NOT TO INTERFERE WITH OPERATIONS SUCH AS DOOR SWINGS, MECHANICAL EQUIPMENT, ETC.
14. SMOKE DETECTORS MUST BE PHOTOELECTRIC WITH NO IONIZING SOURCE.
15. PROVIDE PROTECTED ENTRANCE CABINETS WITH SURGE PROTECTION PER NFPA 70 WHERE LOW VOLTAGE CABLES PENETRATE THE EXTERIOR WALLS OF ENCLOSURES.

SYSTEM OUTPUTS

SYSTEM INPUTS		A: ACTUATE COMMON ALARM SIGNAL INDICATOR	B: ACTUATE AUDIBLE/VISUAL ALARM SIGNAL (NOTE 1)	C: ACTUATE COMMON TROUBLE SIGNAL INDICATOR	D: ACTUATE AUDIBLE/VISUAL TROUBLE SIGNAL INDICATOR	E: ACTUATE APPROPRIATE LOCATION INDICATOR	F: DISPLAY CHANGE OF STATUS AT FACP AND FAA	G: TRANSMIT SIGNAL TO BASE SUPERVISING STATION
1	MANUAL FIRE ALARM BOX	●	●			●	●	●
2	SMOKE DETECTOR	●	●			●	●	●
3	OPEN CIRCUIT			●	●		●	●
4	SMOKE DETECTOR - DIRTY			●	●	●	●	
5	GROUND FAULT			●	●		●	●
6	NOTIFICATION APPLIANCE CIRCUIT SHORT			●	●		●	●
7	FIRE ALARM AC FAILURE			●	●		●	●
8	FIRE ALARM SYSTEM LOW BATTERY			●	●		●	●
		A	B	C	D	E	F	G

NOTE:
1. AUDIBLE/VISUAL FIRE ALARM SIGNAL SHALL BE TRANSMITTED TO EVERY NOTIFICATION APPLIANCE IN THE COMPLEX REGARDLESS OF WHICH INITIATING ZONE GENERATES THE ALARM.

FIRE ALARM INPUT/OUTPUT MATRIX (A2)

SCALE: NTS

SYM	DESCRIPTION	DATE	APPR
0	ISSUED FOR CONSTRUCTION	10/28/2016	CBC

NAVFAC

STATE OF MAINE — EMILY PINYARD No.12126 — LICENSED PROFESSIONAL ENGINEER — 10/28/16 — SEAL

Colby Company engineering — A/E INFO

APPROVED BY (SIGNATURE): David W. Greenfield
FOR COMMANDER NAVFAC
ACTIVITY: TIM FISHER, C. 2370.6 BRANCH HEAD
SATISFACTORY TO: DATE 10/28/2016
DES ERP | DRW CSS | CHK WEP
PMDM: PETER STOCKLESS
BRANCH MANAGER: IAN BODWELL
FEA/PM&E: AMIN BAHROUR
FIRE PROTECTION: PATRICK BAKAJ

DEPARTMENT OF THE NAVY — NAVAL FACILITIES ENGINEERING COMMAND — PUBLIC WORKS DEPARTMENT - MAINE
NAVAL FACILITIES ENGINEERING COMMAND ~ MID-ATLANTIC — NAVAL SHIPYARD - PORTSMOUTH, NH
PORTSMOUTH NAVAL SHIPYARD — KITTERY, ME
DRY DOCK #1 DEFUELING COMPLEX
DRE-7
FIRE ALARM LEGEND, ABBREVIATIONS AND GENERAL NOTES

EPROJECT NO.: 1363311
CONSTR. CONTR. NO.: N40085-17-C-5002
NAVFAC DRAWING NO.: 12735054
SHEET 83 OF 117
FA-001 | DD1-16-1135

DRAWFORM REVISION: 10 OCTOBER 2014

10/28/2016 7:08:32 AM X:\297 PORTSMOUTH NAVAL SHIPYARD\297.005.001 - DD#1 DEFUELING COMPLEX DESIGN\DRAWINGS\DRE7\SHEETS\FA-001.DWG

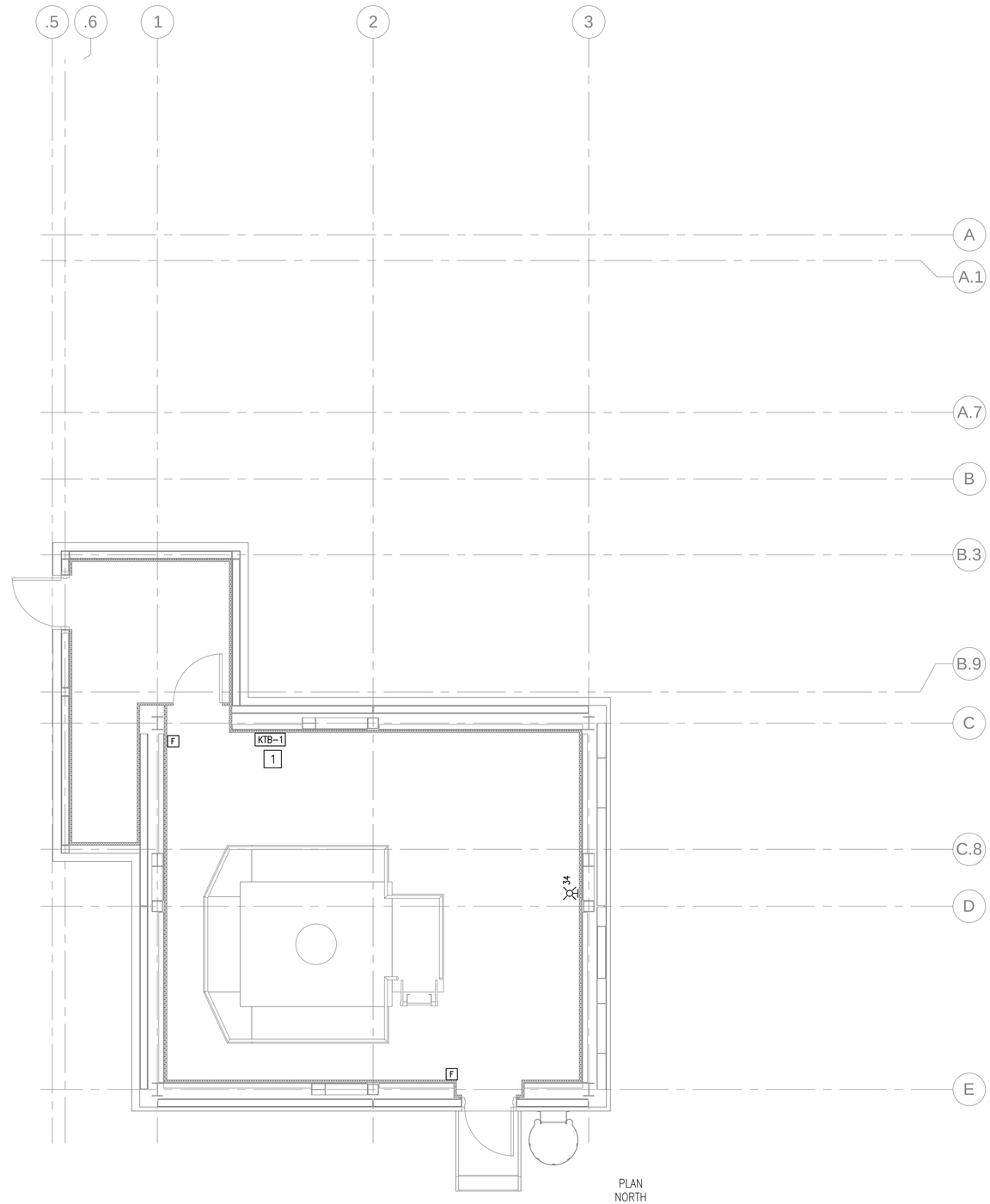

GROUND LEVEL FIRE ALARM PLAN (NO STORAGE ANNEX)

SCALE: 1/4" = 1'–0"

PLAN NORTH

NOTES

1. SEE SHEET FA–001 FOR LEGEND, ABBREVIATIONS AND GENERAL NOTES.
2. THE DRE–7 SHALL BE PROGRAMMED AS DISCONNECT ZONE DZ–2 AT THE FACP AND TRANSMISSION ZONE TZ–2. SEE SITE SHEET FA–101.
3. MINIMIZE THE PRESENCE OF SURFACE–MOUNTED DEVICES AND CONDUIT UP TO 12 FEET ABOVE THE DRE–7 GROUND FLOOR TO THE MAXIMUM EXTENT POSSIBLE.
   3.1. SUBMIT SHOP DRAWINGS WITH ELEVATION VIEWS OF ALL SURFACE–MOUNTED DEVICES AND WIRING IN THIS AREA TO PNSY FOR APPROVAL

KEYED NOTES

1 UL–LISTED KEYED TEST BOXES (KTB) FOR SMOKE DETECTORS AT DRE–7 CEILING. MOUNT 48–INCHES ABOVE FINISHED FLOOR. INTERLOCK WITH SMOKE DETECTORS INDICATED ON FA–101.

SYM	DESCRIPTION	DATE	APPR
0	ISSUED FOR CONSTRUCTION	10/28/2016	CBC

NAVFAC

STATE OF MAINE
EMILY PINYARD
No. 12126
LICENSED
PROFESSIONAL ENGINEER
10/28/16
SEAL

Colby Company engineering
A/E INFO

APPROVED
Daniel W. Greenfield
FOR COMMANDER NAVFAC

ACTIVITY
TIM FISHER
C. 2370.6 BRANCH HEAD

SATISFACTORY TO DATE 10/28/2016

DES	EAF	DRW	CSS	CHK	AHS

PM/DM PETER STOCKLESS
BRANCH MANAGER IAN BODWELL
FEAD/PM&E AMIN BAHROUR
FIRE PROTECTION PATRICK BAKAJ

DEPARTMENT OF THE NAVY
NAVAL FACILITIES ENGINEERING COMMAND
PUBLIC WORKS DEPARTMENT - MAINE

NAVAL FACILITIES ENGINEERING COMMAND – MID-ATLANTIC
NAVAL SHIPYARD - PORTSMOUTH, NH

PORTSMOUTH NAVAL SHIPYARD
KITTERY, ME

DRY DOCK #1 DEFUELING COMPLEX
DRE-7

GROUND LEVEL FIRE ALARM PLAN (NO STORAGE ANNEX)

EPROJECT NO.: 1363311
CONSTR. CONTR. NO. N40085-17-C-5002
NAVFAC DRAWING NO. 12735055
SHEET 84 OF 117

FA-100 | DD1-16-1136

DRAWFORM REVISION: 10 OCTOBER 2014

10/28/2016 7:08:36 AM X:\297 PORTSMOUTH NAVAL SHIPYARD\297.005.001 - DD#1 DEFUELING COMPLEX DESIGN\DRAWINGS\DRE7\SHEETS\FA-100.DWG

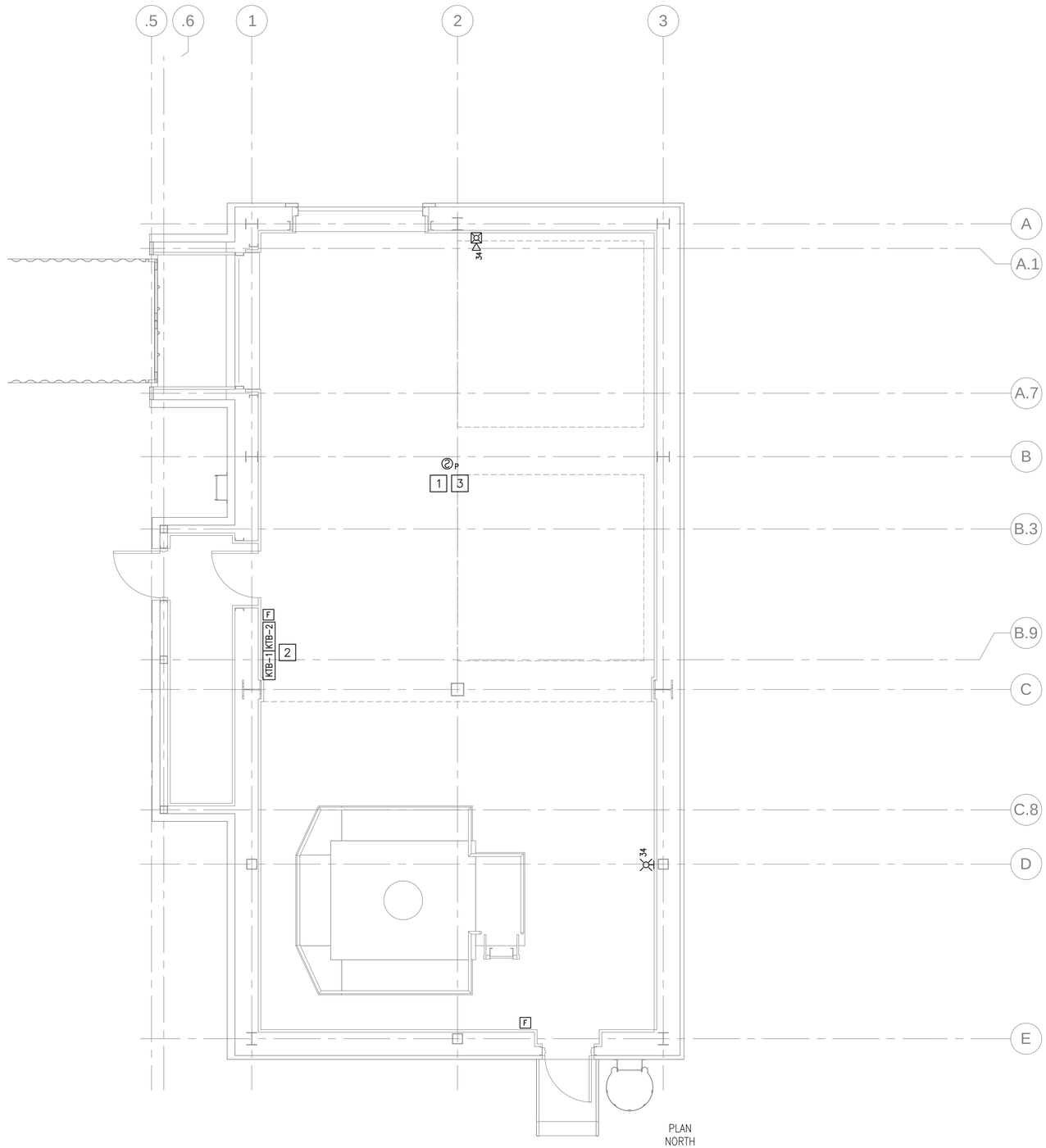

PLAN NORTH

GROUND LEVEL FIRE ALARM PLAN

SCALE: 1/4" = 1'-0"

NOTES

1. SEE SHEET FA-001 FOR LEGEND, ABBREVIATIONS AND GENERAL NOTES.
2. THE DRE-7 SHALL BE PROGRAMMED AS DISCONNECT ZONE DZ-2 AT THE FACP AND TRANSMISSION ZONE TZ-2. SEE SITE SHEET FA-101.
3. MINIMIZE THE PRESENCE OF SURFACE-MOUNTED DEVICES AND CONDUIT UP TO 12 FEET ABOVE THE DRE-7 GROUND FLOOR TO THE MAXIMUM EXTENT POSSIBLE.
   3.1. SUBMIT SHOP DRAWINGS WITH ELEVATION VIEWS OF ALL SURFACE-MOUNTED DEVICES AND WIRING IN THIS AREA TO PNSY FOR APPROVAL

KEYED NOTES

1. CEILING MOUNTED DETECTOR MOUNTED AT LOW-ROOF PORTION OF ENCLOSURE.
2. UL-LISTED KEYED TEST BOXES (KTB) FOR SMOKE DETECTORS AT DRE-7 CEILING. MOUNT 48-INCHES ABOVE FINISHED FLOOR. INTERLOCK WITH SMOKE DETECTORS INDICATED ON FA-101.
3. CONNECT TO KTB-2.

0 2' 4' 8'
Scale: 1/4" = 1'-0"

SYM	DESCRIPTION	DATE	APPR
0	ISSUED FOR CONSTRUCTION	10/28/2016	CBC

NAVFAC

STATE OF MAINE
EMILY PINYARD
No. 12126
LICENSED
PROFESSIONAL ENGINEER
10/28/16
SEAL

Colby Company engineering
A/E INFO

APPROVED
Daniel W. Greenfield
FOR COMMANDER NAVFAC

ACTIVITY
TIM FISHER
C. 2370.6 BRANCH HEAD

SATISFACTORY TO DATE 10/28/2016

DES	ERP	DRW	CSS	CHK	WEP

PM/DM PETER STOCKLESS
BRANCH MANAGER IAN BODWELL
FEAD/PM&E AMIN BAHROUR
FIRE PROTECTION PATRICK BAKAJ

DEPARTMENT OF THE NAVY
NAVAL FACILITIES ENGINEERING COMMAND
PUBLIC WORKS DEPARTMENT - MAINE

NAVAL FACILITIES ENGINEERING COMMAND ~ MID-ATLANTIC
NAVAL SHIPYARD - PORTSMOUTH, NH

PORTSMOUTH NAVAL SHIPYARD
KITTERY, ME

DRY DOCK #1 DEFUELING COMPLEX
DRE-7

GROUND LEVEL FIRE ALARM PLAN

EPROJECT NO.: 1363311
CONSTR. CONTR. NO. N40085-17-C-5002
NAVFAC DRAWING NO. 12735056
SHEET 85 OF 117

FA-100A | DD1-16-1137

DRAWFORM REVISION: 10 OCTOBER 2014

10/28/2016 7:08:40 AM X:\297 PORTSMOUTH NAVAL SHIPYARD\297.005.001 - DD#1 DEFUELING COMPLEX DESIGN\DRAWINGS\DRE7\SHEETS\FA-100A.DWG

NOTES

1. SEE SHEET FA-001 FOR LEGEND, ABBREVIATIONS AND GENERAL NOTES.

KEYED NOTES

1. SIDEWALL SMOKE DETECTOR INSTALLED BETWEEN 4-INCHES AND 12-INCHES BELOW THE SMOOTH CEILING AND WITHIN 36" OF ROOF PEAK.
2. CONNECT TO KTB-1 AT GROUND LEVEL.

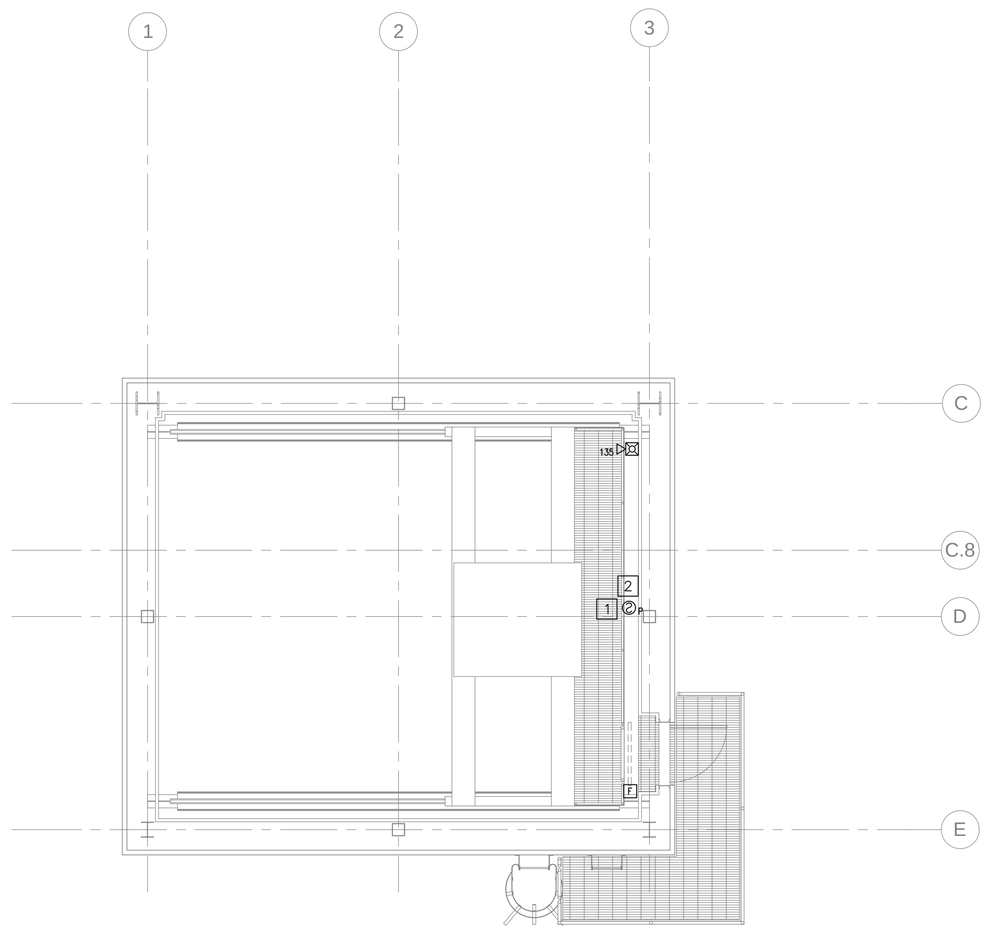

PLAN NORTH

CRANE LEVEL FIRE ALARM PLAN

SCALE: 1/4" = 1'-0"

0 2' 4' 8'
Scale: 1/4" = 1'-0"

SYM	DESCRIPTION	DATE	APPR
0	ISSUED FOR CONSTRUCTION	10/28/2016	CBC

NAVFAC

STATE OF MAINE
EMILY PINYARD
No. 12126
LICENSED
PROFESSIONAL ENGINEER
10/28/16
SEAL

Colby Company engineering
A/E INFO

APPROVED
Daniel W. Greenfield
FOR COMMANDER NAVFAC

ACTIVITY
TIM FISHER
C. 2370.6 BRANCH HEAD

SATISFACTORY TO DATE 10/28/2016

DES ERP | DRW CSS | CHK WEP

PM/DM PETER STOCKLESS
BRANCH MANAGER IAN BODWELL
FEA/DP/M&E AMIN BAHROUR
FIRE PROTECTION PATRICK BAKAJ

DEPARTMENT OF THE NAVY
NAVAL FACILITIES ENGINEERING COMMAND
PUBLIC WORKS DEPARTMENT - MAINE

NAVAL FACILITIES ENGINEERING COMMAND – MID-ATLANTIC
NAVAL SHIPYARD - PORTSMOUTH, NH

PORTSMOUTH NAVAL SHIPYARD
KITTERY, ME

DRY DOCK #1 DEFUELING COMPLEX
DRE-7

CRANE LEVEL FIRE ALARM PLAN

EPROJECT NO.: 1363311

CONSTR. CONTR. NO. N40085-17-C-5002

NAVFAC DRAWING NO. 12735057

SHEET 86 OF 117

FA-101 | DD1-16-1138

DRAWFORM REVISION: 10 OCTOBER 2014

10/28/2016 7:08:44 AM X:\297 PORTSMOUTH NAVAL SHIPYARD\297.005.001 - DD#1 DEFUELING COMPLEX DESIGN\DRAWINGS\DRE7\SHEETS\FA-101.DWG

ABBREVIATIONS

A	AMP
ACS	ACCESS
ACE	ACCESS CONTROL ENCLOSURE
AFF	ABOVE FINISHED FLOOR
AHU	AIR–HANDLING UNIT
APD	AIR PRESSURE DROP
BHP	BRAKE HORSEPOWER
C	CONDENSATE
CA	COMPRESSED AIR
CFM	CUBIC FEET PER MINUTE
CLG	COOLING
DB	DRY BULB
DEG	DEGREE
DIA, ø	DIAMETER
DN	DOWN
DP,DPS	DIFFERENTIAL–PRESSURE SENSOR
EA	EACH, EXHAUST AIR
EAT	ENTERING AIR TEMPERATURE
EDH	ELECTRIC DUCT HEATER
EUH	ELECTRIC UNIT HEATER
ESP	EXTERNAL STATIC PRESSURE
EWT	ENTERING WATER TEMPERATURE
F	FAN, FAHRENHEIT
FH	FILTER HOUSING
FT	FEET
GA	GAUGE
GM	GEAR MOTOR
GPM	GALLONS PER MINUTE
HP	HEAT PUMP, HORSEPOWER
HR	HOUR
HTG	HEATING
HZ	HERTZ
IC	INSTRUMENTATION AND CONTROL
IN	INCHES
LAT	LEAVING AIR TEMPERATURE
LB	POUND
LCP	LOCAL CONTROL PANEL
LPC	LOW PRESSURE CONDENSATE
LPS	LOW PRESSURE STEAM
LWT	LEAVING WATER TEMPERATURE
MAX	MAXIMUM
MBH	1000 BTU PER HOUR
MCP	MAIN CONTROL PANEL
MIN	MINIMUM
NC	NOISE CRITERIA
NPT	NATIONAL PIPE THREAD
NTS	NOT TO SCALE
OA	OUTSIDE AIR
OIT	OPERATOR INTERFACE TERMINAL
PD	PRESSURE DROP
PDS	PRESSURE DIFFERENTIAL SWITCH
PE	PHOTOEYE
PH	PHASE
PS	PRESSURE SWITCH
PT	PRESSURE TRANSMITTER
RA	RETURN AIR
RCP	ROOF CONTROL PANEL
RG	REFRIGERANT, GAS PHASE
RL	REFRIGERANT, LIQUID PHASE
RPM	REVOLUTIONS PER MINUTE
SA	SUPPLY AIR
SP	STATIC PRESSURE
SS	STAINLESS STEEL
T	TEMPERATURE SENSOR, THERMOSTAT
TSP	TOTAL STATIC PRESSURE
TYP	TYPICAL
VFD	VARIABLE FREQUENCY DRIVE
W/	WITH
WB	WET–BULB, WHEEL BLOCK
WC	WATER COLUMN
WG	WATER GAUGE
WPD	WATER PRESSURE DROP
ZSC	POSITION SWITCH CLOSED
ZSO	POSITION SWITCH OPEN

DUCTWORK SYMBOLS

- RETURN/EXHAUST DUCT UP
- RETURN/EXHAUST DUCT DOWN
- SUPPLY DUCT UP
- SUPPLY DUCT DOWN
- RADIUS ELBOW
- SQUARE ELBOW W/ TURNING VANES
- OFFSET
- DUCT TRANSITION FROM RECTANGULAR TO ROUND

MECHANICAL LINETYPE LEGEND

- EXISTING ITEMS TO REMAIN
- ITEMS TO BE PROVIDED
- HIDDEN ITEMS
- CONTROL WIRING

MECHANICAL SYMBOLS

- SECTION NUMBER
- DRAWING WHERE SECTION IS DRAWN
- H / 2 — SYMBOL PER ABBREVIATION LIST; EQUIPMENT SEQUENCE NUMBER
- S–1 / 100 — DIFFUSER, REGISTER OR GRILLE SEQUENCE NUMBER; CFM
- UNIT HEATER
- DIRECTION OF AIR FLOW
- VOLUME DAMPER
- M — MOTORIZED DAMPER
- T — THERMOSTAT
- DP — DIFFERENTIAL PRESSURE SENSOR
- T — TEMPERATURE SENSOR
- CONNECT TO EXISTING
- FAN
- MANUAL DAMPER, HAND WHEEL
- H — HAND DAMPER ACTUATOR
- V — VARIABLE–AREA FLOW METER
- +15 / +15 — SMACNA DUCT PRESSURE CLASS DESIGNATION MARKER

PIPING SYMBOLS

- BALANCING VALVE
- COMBINATION FLOW MEASURING/ BALANCING VALVE (CIRCUIT SETTER)
- BUTTERFLY VALVE
- GATE VALVE
- BALL VALVE
- GLOBE VALVE
- TWO–WAY AUTOMATIC CONTROL VALVE
- SAFETY RELIEF VALVE
- THREE–WAY AUTOMATIC CONTROL VALVE
- STRAINER W/BALL DRAIN VALVE, HOSE BIB AND CAP
- UNION OR FLANGE AS DICTATED BY PIPE SIZE
- PIPE RISE
- PIPE DROP
- END CAP
- THERMOMETER TEMPERATURE/PRESSURE WELL
- P/T PORT (PRESSURE/TEMPERATURE)
- MANUAL AIR VENT
- REDUCER (ECCENTRIC–FOB OR FOT)
- REDUCER (CONCENTRIC)
- DIRECTION OF FLOW OF PIPE

APPLICABLE CODES AND STANDARDS

- UFC 3–410–04N INDUSTRIAL VENTILATION
- UFC 3–400–01FA HVAC
- DOE HDBK 1169–2003 NUCLEAR AIR CLEANING HANDBOOK
- ASME AG–1 CODE ON NUCLEAR AIR AND GAS TREATMENT
- SMACNA – HVAC AIR DUCT LEAKAGE MANUAL

GENERAL NOTES

1. GENERAL NOTES, SYMBOLS LIST AND DETAILS ARE APPLICABLE TO DRAWINGS MARKED M–#.
2. DRAWINGS ARE DIAGRAMMATIC; DETERMINE LOCATIONS OF SYSTEMS AND COMPONENTS IN FIELD.
3. COORDINATE WORK OF THIS SECTION WITH THAT OF OTHER SECTIONS. SPECIFICALLY STRUCTURAL PENETRATIONS OF DUCTWORK AND PIPING THROUGH ENCLOSURE WALL AND PLATFORM GRATING.
4. INSTALL CENTER OF SCREEN CONTROL PANELS 5 FEET ABOVE FINISHED FLOOR.
5. WORK SHALL BE COORDINATED WITH TRADES INVOLVED. OFFSETS IN PIPING AND DUCTS (INCLUDING DIVIDED DUCTS) AND TRANSITIONS AROUND OBSTRUCTIONS SHALL BE PROVIDED AT NO ADDITIONAL COST TO THE GOVERNMENT.
6. VERIFY EQUIPMENT CONNECTIONS WITH MANUFACTURER'S CERTIFIED DRAWINGS. VERIFY AND PROVIDE DUCT TRANSITIONS TO FURNISHED EQUIPMENT. FIELD VERIFY AND COORDINATE ALL DIMENSIONS BEFORE FABRICATION.
7. INSTALL EQUIPMENT, PIPING AND DUCTWORK AS REQUIRED TO PROVIDE A VIBRATION FREE INSTALLATION AND TO FACILITATE EQUIPMENT ACCESS AS REQUIRED BY EQUIPMENT MANUFACTURER.
8. INTERNAL AIR FLOW DIMENSIONS ARE SHOWN FOR DUCTS.
9. PROVIDE CLAMPS, OFFSETS, EXPANSION JOINTS, ANCHORS AND GUIDES AS NECESSARY TO PREVENT STRESS ON PIPING.
10. PROVIDE VENTS AT HIGH POINTS IN PIPING SYSTEMS AND DRAIN VALVES AT LOW POINTS. THIS INCLUDES LOW POINTS IN COMPRESSED AIR SYSTEM PIPING TO ACCOMMODATE DRAINING MOISTURE IN LINES.
11. PROVIDE AT LEAST THREE–ELBOW SWINGS FOR PIPE TAKE–OFFS.
12. REFER TO IC–101 AND IC–200 FOR INSTRUMENTATION AND CONTROL.
13. ALL MANUALLY OPERABLE EQUIPMENT SHALL BE ACCESSIBLE FOR OPERATION WITHOUT REQUIRING SPECIAL EQUIPMENT.
14. PROVIDE ADEQUATE CLEARANCE FOR ACCESS TO HARDWARE AND DUCT FLANGES.
15. REFER TO SPECIFICATIONS FOR SEQUENCE OF OPERATIONS.

SYM	DESCRIPTION	DATE	APPR
0	ISSUED FOR CONSTRUCTION	10/28/2016	CBC

NAVFAC

STATE OF MAINE — PETER W. BROWN No. 5743 — PROFESSIONAL ENGINEER — 10/28/16 — SEAL

Colby Company engineering — A/E INFO

APPROVED (Signature) — FOR COMMANDER NAVFAC

ACTIVITY: TIM FISHER, C. 2370.6 BRANCH HEAD

SATISFACTORY TO — DATE 10/28/2016

DES EAF | DRW CSS | CHK PWB

PMDM: PETER STOCKLESS

BRANCH MANAGER: IAN BODWELL

FEA/PM&E: AMIN BAHROUR

FIRE PROTECTION: PATRICK BAKAJ

DEPARTMENT OF THE NAVY — NAVAL FACILITIES ENGINEERING COMMAND — PUBLIC WORKS DEPARTMENT - MAINE

NAVAL FACILITIES ENGINEERING COMMAND ~ MID-ATLANTIC — NAVAL SHIPYARD - PORTSMOUTH, NH

PORTSMOUTH NAVAL SHIPYARD — KITTERY, ME

DRY DOCK #1 DEFUELING COMPLEX

DRE-7

MECHANICAL LEGEND, ABBREVIATIONS AND GENERAL NOTES

EPROJECT NO.: 1363311

CONSTR. CONTR. NO. N40085-17-C-5002

NAVFAC DRAWING NO. 12735058

SHEET 87 OF 117

M-001 | DD1-16-1139

DRAWFORM REVISION: 10 OCTOBER 2014

10/28/2016 7:08:48 AM X:\297 PORTSMOUTH NAVAL SHIPYARD\297.005.001 - DD#1 DEFUELING COMPLEX DESIGN\DRAWINGS\DRE7\SHEETS\M-001.DWG

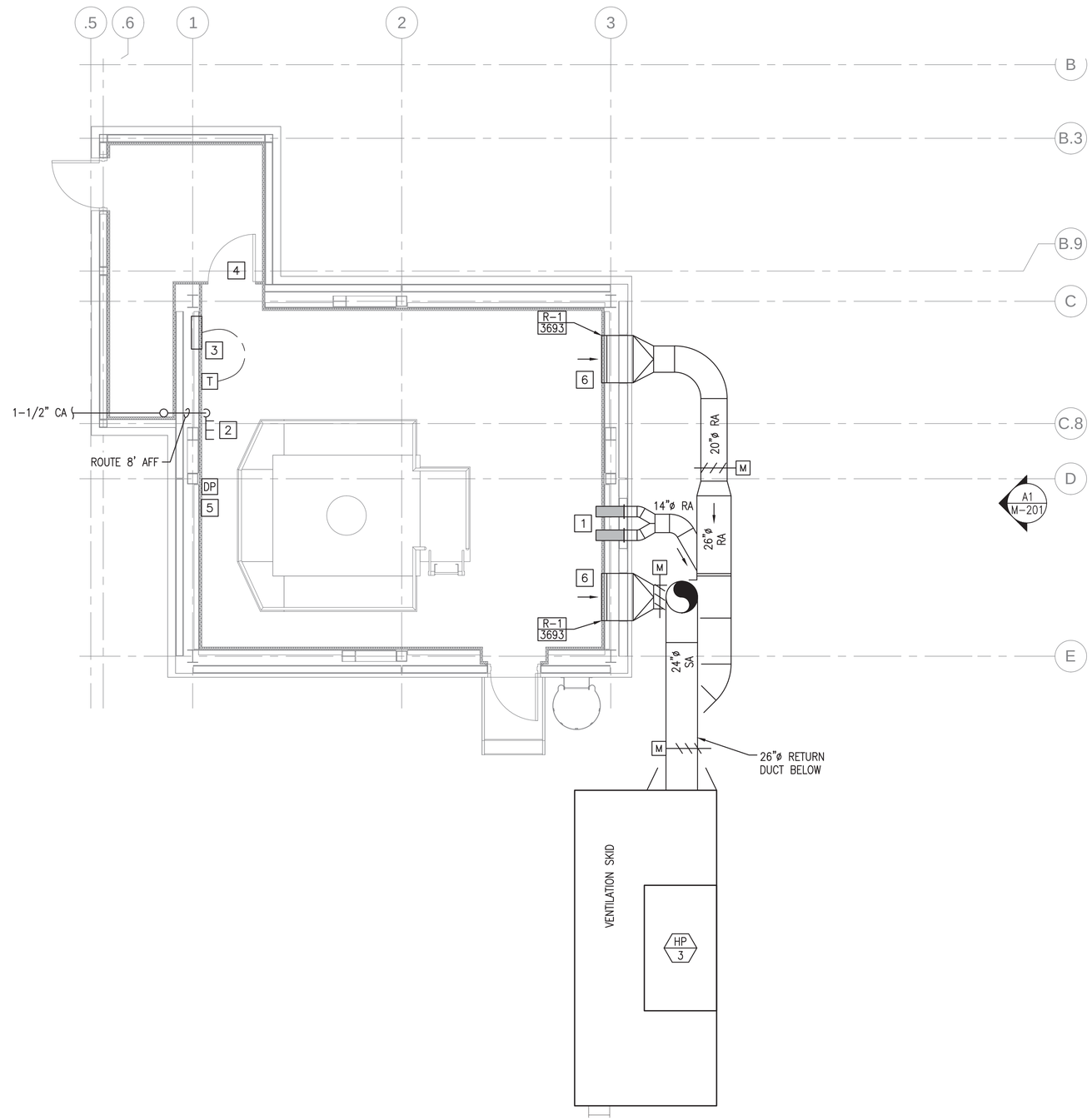

GROUND LEVEL MECHANICAL PLAN (NO STORAGE ANNEX)

SCALE: 1/4" = 1'-0"

PLAN NORTH

0 2' 4' 8'
Scale: 1/4" = 1'-0"

NOTES

1. SEE SHEET M-001 FOR LEGEND, ABBREVIATIONS AND GENERAL NOTES.
2. SEE SHEET M-505 FOR VENTILATION SKID ARRANGEMENT.
3. REFER TO STRUCTURAL AND ARCHITECTURAL DRAWINGS FOR PENETRATION DETAILS.
4. PROVIDE BOLTED FLANGED CONNECTION BETWEEN WALL SLEEVE AND TRANSITION INTO ENCLOSURE, SEE ARCHITECTURAL FOR PENETRATION DETAIL. DUCT MUST BE CAPABLE OF BEING REMOVED FROM ENCLOSURE WITHOUT CUTTING.

KEYED NOTES

1. 8"ø ENGINEERED VENT CONNECTION WITH ELECTRICALLY ACTUATED DAMPER AND FLOW MEASUREMENT SECTION. MOUNT BOTTOM AT 2 FEET AFF. MOUNT DP SENSOR WITHIN REACH. SEE SHEET M-501 AND S-512 FOR DETAIL.
2. PROVIDE 1-1/2" COMPRESSED AIR MANIFOLD WITH (3) 1" VALVES, SHUTOFF VALVE AND UNIVERSAL COUPLER. INSTALL 4 FEET AFF, SEE DETAIL ON M-503. COORDINATE WITH ARCHITECTURAL AND STRUCTURAL FOR PENETRATION DETAIL.
3. HVAC SKID LOCAL CONTROL PANEL, REFER TO IC DRAWINGS.
4. PROVIDE BLAST GATE AT DOOR LOUVER FOR PASSAGEWAY AIR TRANSFER CONTROL. SEE SHEET M-501 FOR DETAIL.
5. NEGATIVE DP SENSOR PORT FOR MONITORING AND CONTROL. LOCATE THRU WALL 5 FEET AFF. SEE SHEET M-501 FOR DETAIL.
6. INSTALL BOTTOM OF GRILLE AT 1'-9 1/4" AFF. COORDINATE WITH SHEET S-512 FOR PENETRATION DETAIL. MAX CFM SHOWN FOR WHEN ENGINEERED VENTS ARE CLOSED.

SYM	DESCRIPTION	DATE	APPR
0	ISSUED FOR CONSTRUCTION	10/28/2016	CBC

NAVFAC

STATE OF MAINE
PETER W. BROWN
No. 5743
PROFESSIONAL ENGINEER
10/28/16
SEAL

Colby Company engineering
A/E INFO

APPROVED
Daniel W. Greenfield
FOR COMMANDER NAVFAC

ACTIVITY
TIM FISHER
C. 2370.6 BRANCH HEAD

SATISFACTORY TO DATE 10/28/2016

DES	DRW	CHK
EAF	CSS	PWB

PMDM: PETER STOCKLESS
BRANCH MANAGER: IAN BODWELL
FEAD/PM&E: AMIN BAHROUR
FIRE PROTECTION: PATRICK BAKAJ

DEPARTMENT OF THE NAVY
NAVAL FACILITIES ENGINEERING COMMAND
PUBLIC WORKS DEPARTMENT - MAINE
NAVAL FACILITIES ENGINEERING COMMAND ~ MID-ATLANTIC
NAVAL SHIPYARD - PORTSMOUTH, NH
PORTSMOUTH NAVAL SHIPYARD
KITTERY, ME
DRY DOCK #1 DEFUELING COMPLEX
DRE-7
GROUND LEVEL MECHANICAL PLAN (NO STORAGE ANNEX)

EPROJECT NO.: 1363311
CONSTR. CONTR. NO. N40085-17-C-5002
NAVFAC DRAWING NO. 12735059
SHEET 88 OF 117

M-100 | DD1-16-1140

DRAWFORM REVISION: 10 OCTOBER 2014

10/28/2016 7:08:52 AM X:\297 PORTSMOUTH NAVAL SHIPYARD\297.005.001 - DD#1 DEFUELING COMPLEX DESIGN\DRAWINGS\DRE7\SHEETS\M-100.DWG

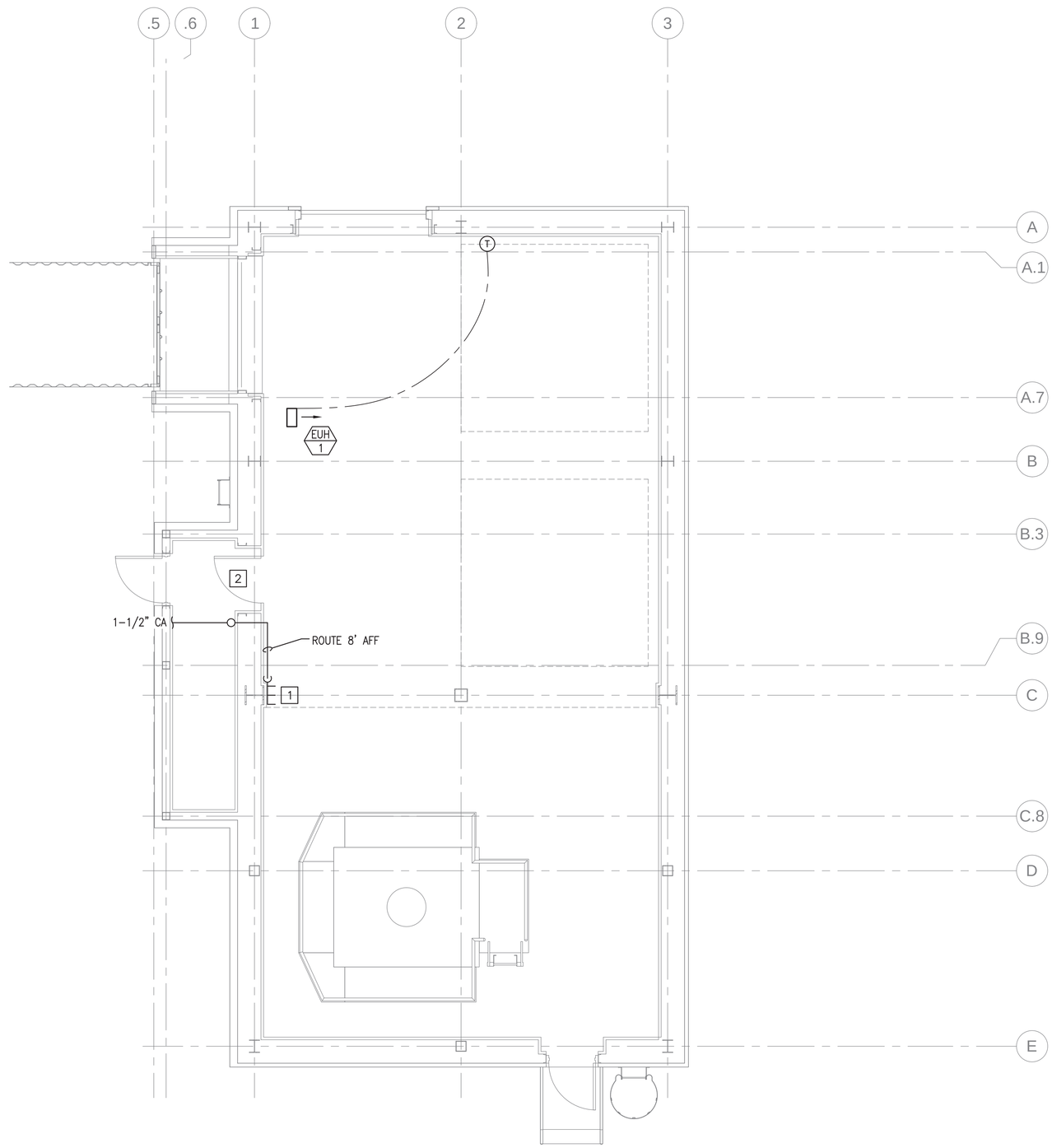

GROUND LEVEL MECHANICAL PLAN

SCALE: 1/4" = 1'-0"

PLAN NORTH

0 2' 4' 8'
Scale: 1/4" = 1'-0"

NOTES

1. SEE SHEET M-001 FOR LEGEND, ABBREVIATIONS AND GENERAL NOTES.
2. THIS DRAWING INCLUDES BID OPTIONS FOR STORAGE ANNEX ONLY. SEE SHEET M-100 FOR CONTINUATION OF MECHANICAL SYSTEMS.
3. INSTALL ELECTRIC UNIT HEATER 8' AFF WITH MANUFACTURER'S SUPPLIED WALL BRACKET.

KEYED NOTES

1. PROVIDE 1-1/2" COMPRESSED AIR MANIFOLD WITH (3) 1" VALVES, SHUTOFF VALVE AND UNIVERSAL COUPLER. INSTALL 4' FEET AFF, SEE DETAIL ON M-503
2. PROVIDE BLAST GATE AT DOOR LOUVER FOR PASSAGEWAY AIR TRANSFER CONTROL. SEE SHEET M-501 FOR DETAIL.

SYM	DESCRIPTION	DATE	APPR
0	ISSUED FOR CONSTRUCTION	10/28/2016	CBC

NAVFAC

STATE OF MAINE
PETER W. BROWN
No. 5743
PROFESSIONAL ENGINEER
10/28/16
SEAL

Colby Company engineering
A/E INFO

APPROVED
Daniel W. Greenfield
FOR COMMANDER NAVFAC

ACTIVITY
TIM FISHER
C. 2370.6 BRANCH HEAD

SATISFACTORY TO DATE 10/28/2016

DES EAF | DRW CSS | CHK PWB

PM/CM	PETER STOCKLESS
BRANCH MANAGER	IAN BODWELL
FEAD/PM/E	AMIN BAHROUR
FIRE PROTECTION	PATRICK BAKAJ

DEPARTMENT OF THE NAVY
NAVAL FACILITIES ENGINEERING COMMAND
PUBLIC WORKS DEPARTMENT - MAINE

NAVAL FACILITIES ENGINEERING COMMAND ~ MID-ATLANTIC
NAVAL SHIPYARD - PORTSMOUTH, NH

PORTSMOUTH NAVAL SHIPYARD
DRY DOCK #1 DEFUELING COMPLEX
DRE-7
KITTERY, ME

GROUND LEVEL MECHANICAL PLAN

EPROJECT NO.: 1363311

CONSTR. CONTR. NO.
N40085-17-C-5002

NAVFAC DRAWING NO.
12735060

SHEET 89 OF 117

M-100A | DD1-16-1141

DRAWFORM REVISION: 10 OCTOBER 2014

10/28/2016 7:09:56 AM X:\297 PORTSMOUTH NAVAL SHIPYARD\297.005.001 - DD#1 DEFUELING COMPLEX DESIGN\DRAWINGS\DRE7\SHEETS\M-100A.DWG

NOTES

1. SEE SHEET M-001 FOR LEGEND, ABBREVIATIONS AND GENERAL NOTES.
2. PROVIDE BOLTED FLANGED CONNECTION BETWEEN WALL SLEEVE AND TRANSITION INTO ENCLOSURE, SEE ARCHITECTURAL AND STRUCTURAL DRAWING S-512 FOR PENETRATION DETAIL. DUCT MUST BE CAPABLE OF BEING REMOVED FROM ENCLOSURE FOR DECOMMISSIONING.

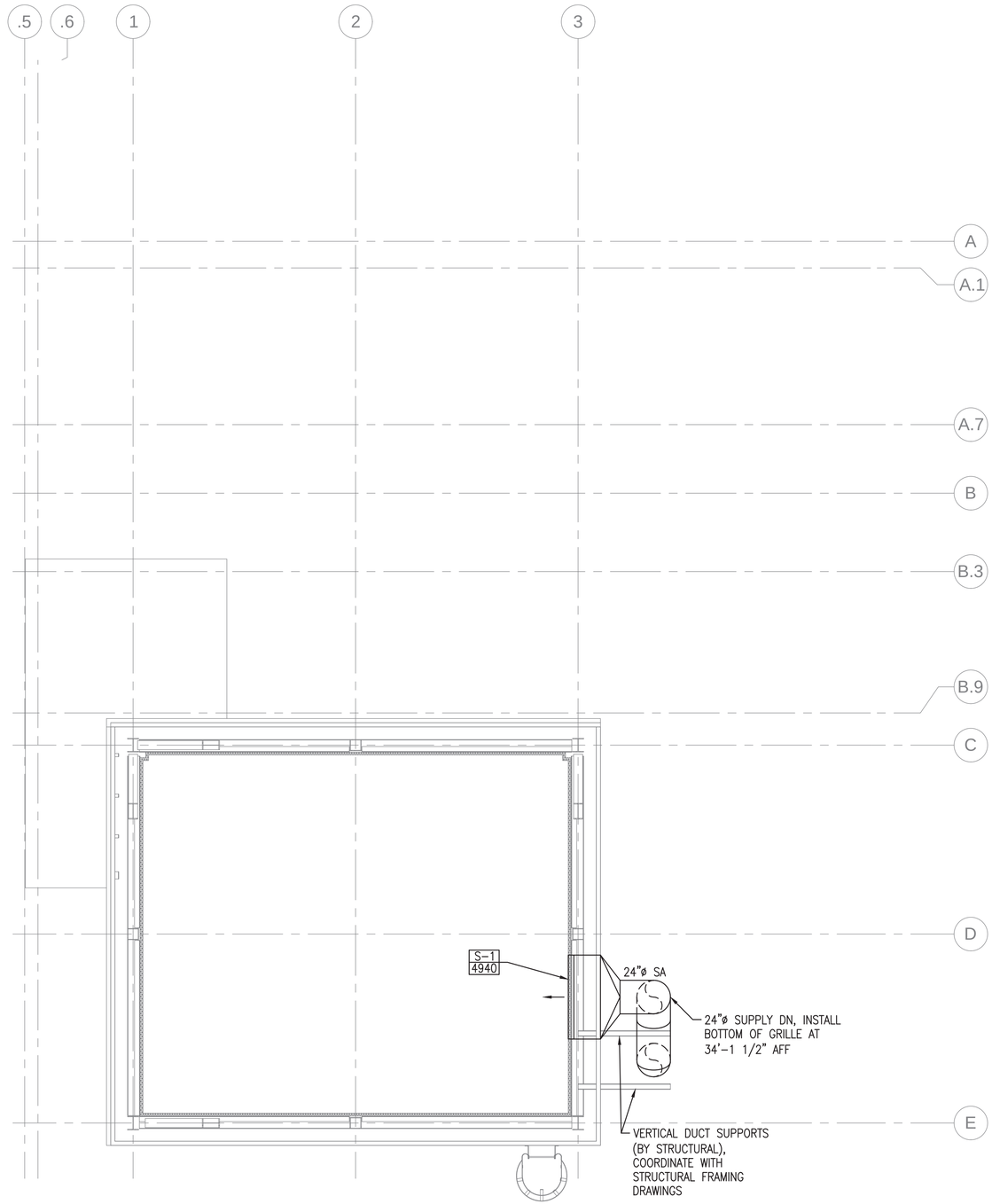

PLAN NORTH

LOWER ROOF MECHANICAL PLAN (NO STORAGE ANNEX)

SCALE: 1/4" = 1'-0"

0 2' 4' 8'
Scale: 1/4" = 1'-0"

SYM	DESCRIPTION	DATE	APPR
0	ISSUED FOR CONSTRUCTION	10/28/2016	CBC

NAVFAC

STATE OF MAINE
PETER W. BROWN
No. 5743
PROFESSIONAL ENGINEER
10/28/16
SEAL

Colby Company engineering
A/E INFO

APPROVED
Daniel W. Greenfield
FOR COMMANDER NAVFAC

ACTIVITY
TIM FISHER
C. 2370.6 BRANCH HEAD

SATISFACTORY TO DATE 10/28/2016

DES	DRW	CHK
EAF	CSS	PWB

PM/DM: PETER STOCKLESS
BRANCH MANAGER: IAN BODWELL
FEA/PM&E: AMIN BAHROUR
FIRE PROTECTION: PATRICK BAKAJ

DEPARTMENT OF THE NAVY
NAVAL FACILITIES ENGINEERING COMMAND
PUBLIC WORKS DEPARTMENT - MAINE
NAVAL FACILITIES ENGINEERING COMMAND ~ MID-ATLANTIC
NAVAL SHIPYARD - PORTSMOUTH, NH
PORTSMOUTH NAVAL SHIPYARD
KITTERY, ME
DRY DOCK #1 DEFUELING COMPLEX
DRE-7
LOWER ROOF MECHANICAL PLAN (NO STORAGE ANNEX)

EPROJECT NO.: 1363311
CONSTR. CONTR. NO.: N40085-17-C-5002
NAVFAC DRAWING NO.: 12735061
SHEET 90 OF 117

M-101 | DD1-16-1142

DRAWFORM REVISION: 10 OCTOBER 2014

10/28/2016 7:09:00 AM X:\297 PORTSMOUTH NAVAL SHIPYARD\297.005.001 - DD#1 DEFUELING COMPLEX DESIGN\DRAWINGS\DRE7\SHEETS\M-101.DWG

NOTES

1. SEE SHEET M-001 FOR LEGEND, ABBREVIATIONS AND GENERAL NOTES.
2. COORDINATE WITH IC AND STRUCTURAL DRAWINGS FOR CONTROLS, TARGET PLATES AND MOUNTING BRACKETS.
3. THE CONTRACTOR SHALL VERIFY THE MOTOR SIZING WITH THE MANUFACTURER BASED ON THE ANTICIPATED WEIGHT OF THE ROOF ASSEMBLY. ALL WHEEL BLOCKS AND MOTORS SHALL BE COORDINATED WITH THE STRUCTURAL AND ARCHITECTURAL SUBCONTRACTORS TO ENSURE A COORDINATED SYSTEM. THE ROOF SHALL OPEN AND CLOSE TO THE EXTENTS AS SHOWN ON THE ARCHITECTURAL DRAWINGS. THE ROOF SHALL CLOSE AND PROVIDE A COMPLETE WEATHER SEAL AT ALL SEAMS. THE ROOF CONTROL SYSTEM SHALL CONTROL THE MOTORS THOUGH THE LIMIT SWITCHES TO PROVIDE A SMOOTH STOP AND CLOSE, ROOF SECTION BUMPING AND SEPARATING AT THE CLOSED CONDITION WILL NOT BE ACCEPTABLE. THE CONTROL SYSTEM AND LIMIT SWITCHES SHALL BE ADJUSTED AS REQUIRED TO PROVIDE A COMPLETE CLOSED ROOF CONDITION.

KEYED NOTES

1. GEAR MOTOR AND WHEEL BLOCK.
2. WHEEL BLOCK WITHOUT GEAR MOTOR.
3. TARGET PLATE AND CLOSED POSITION LIMIT SENSOR, EATON MODEL E58-30DPS280-GD OR EQUAL.
4. OPEN POSITION LIMIT SENSORS, EATON MODEL E58-30DPS280-GD OR EQUAL.

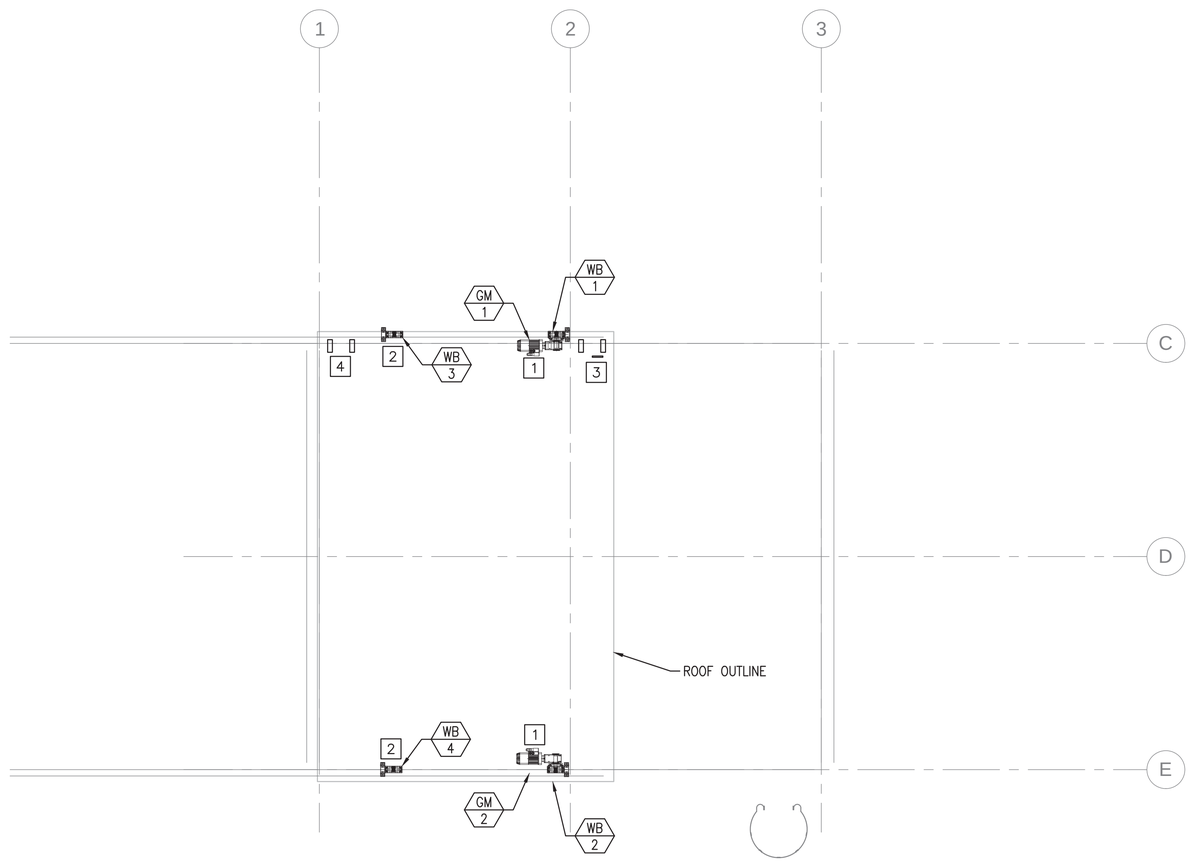

BOTTOM OF ROOF MECHANICAL PLAN

SCALE: 1/4" = 1'-0"

0 2' 4' 8'
Scale: 1/4" = 1'-0"

SYM	DESCRIPTION	DATE	APPR
0	ISSUED FOR CONSTRUCTION	10/28/2016	CBC

NAVFAC

STATE OF MAINE
PETER W. BROWN
No. 5743
PROFESSIONAL ENGINEER
10/28/16
SEAL

Colby Company engineering
A/E INFO

APPROVED
Digitally Signed
David W. Greenfield
FOR COMMANDER NAVFAC

ACTIVITY
TIM FISHER
C. 2370.6 BRANCH HEAD

SATISFACTORY TO DATE 10/28/2016
DES EAF DRW CSS CHK PWB
PMDM PETER STOCKLESS
BRANCH MANAGER IAN BODWELL
FEA/DPM&E AMIN BAHROUR
FIRE PROTECTION PATRICK BAKAJ

DEPARTMENT OF THE NAVY
NAVAL FACILITIES ENGINEERING COMMAND ~ MID-ATLANTIC
PUBLIC WORKS DEPARTMENT, MAINE
NAVAL FACILITIES ENGINEERING COMMAND
NAVAL SHIPYARD, PORTSMOUTH, NH
PORTSMOUTH NAVAL SHIPYARD
KITTERY, ME
DRY DOCK #1 DEFUELING COMPLEX
DRE-7
BOTTOM OF ROOF MECHANICAL PLAN

EPROJECT NO.: 1363311
CONSTR. CONTR. NO. N40085-17-C-5002
NAVFAC DRAWING NO. 12735062
SHEET 91 OF 117
M-102 DD1-16-1143

DRAWFORM REVISION: 10 OCTOBER 2014

10/28/2016 7:09:05 AM X:\297 PORTSMOUTH NAVAL SHIPYARD\297.005.001 - DD#1 DEFUELING COMPLEX DESIGN\DRAWINGS\DRE7\SHEETS\M-102.DWG

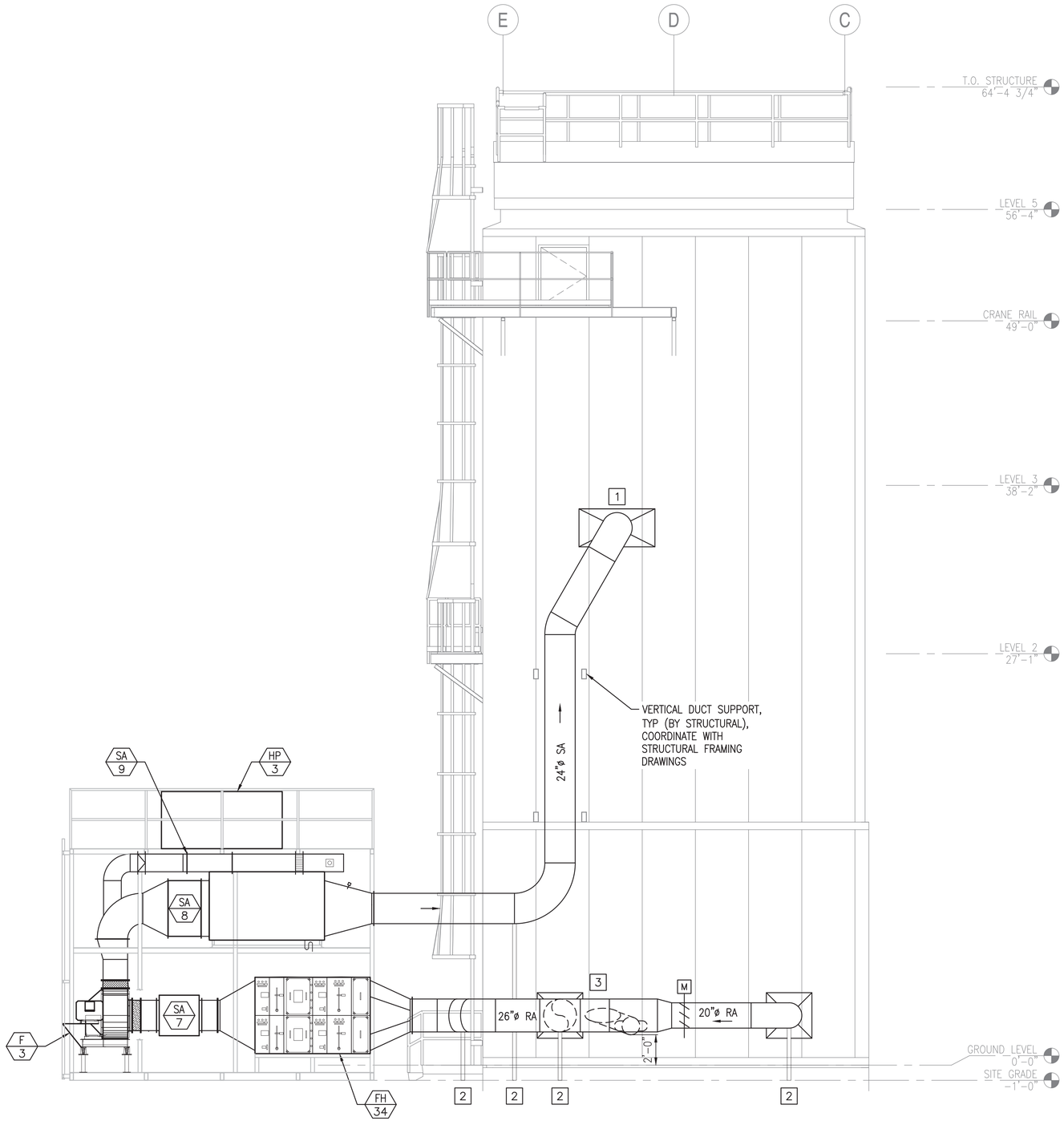

EAST MECHANICAL ELEVATION

SCALE: 1/4" = 1'-0"

M-100 A1

NOTES

1. SEE SHEET M-001 FOR LEGEND, ABBREVIATIONS AND GENERAL NOTES.
2. COORDINATE WITH STRUCTURAL FOR VERTICAL DUCT SUPPORTS.
3. REFER TO STRUCTURAL DRAWING S-202 FOR PENETRATION LOCATIONS AND S-512 FOR PENETRATION DETAIL.

KEYED NOTES

1. BOTTOM OF SUPPLY GRILLE ENTERS AT 34'-1 1/2" AFF.
2. PIPE SUPPORT WITH DUCT SADDLE, SEE SHEET M-502 FOR DETAIL.
3. 20"ø RA DAMPER BEHIND. SEE SHEET M-100.

SYM	DESCRIPTION	DATE	APPR
0	ISSUED FOR CONSTRUCTION	10/28/2016	CBC

NAVFAC

STATE OF MAINE
PETER W. BROWN
No. 5743
PROFESSIONAL ENGINEER
10/28/16 SEAL

Colby Company engineering
A/E INFO

APPROVED
Daniel W. Greenfield
FOR COMMANDER NAVFAC

ACTIVITY
TIM FISHER
C. 2370.6 BRANCH HEAD

SATISFACTORY TO DATE 10/28/2016
DES EAF DRW CSS CHK PWB
PMDM PETER STOCKLESS
BRANCH MANAGER IAN BODWELL
FEA/DPM&E AMIN BAHROUR
FIRE PROTECTION PATRICK BAKAJ

DEPARTMENT OF THE NAVY
NAVAL FACILITIES ENGINEERING COMMAND
PUBLIC WORKS DEPARTMENT - MAINE
NAVAL FACILITIES ENGINEERING COMMAND ~ MID-ATLANTIC
NAVAL SHIPYARD - PORTSMOUTH, NH
PORTSMOUTH NAVAL SHIPYARD
KITTERY, ME
DRY DOCK #1 DEFUELING COMPLEX
DRE-7
MECHANICAL ELEVATIONS

EPROJECT NO.: 1363311
CONSTR. CONTR. NO. N40085-17-C-5002
NAVFAC DRAWING NO. 12735063
SHEET 92 OF 117
M-201 DD1-16-1144

DRAWFORM REVISION: 10 OCTOBER 2014

0 2' 4' 8'
Scale: 1/4" = 1'-0"

10/28/2016 7:09:11 AM X:\297 PORTSMOUTH NAVAL SHIPYARD\297.005.001 - DD#1 DEFUELING COMPLEX DESIGN\DRAWINGS\DRE7\SHEETS\M-201.DWG

NOTES

1. SEE SHEET M-001 FOR LEGEND, ABBREVIATIONS AND GENERAL NOTES.

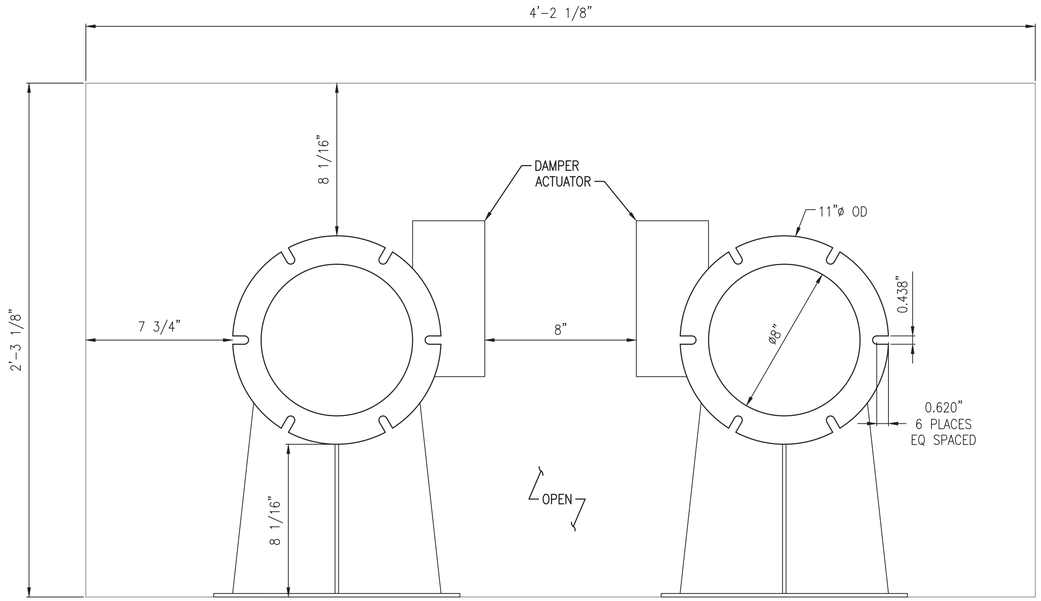

FRONT VIEW

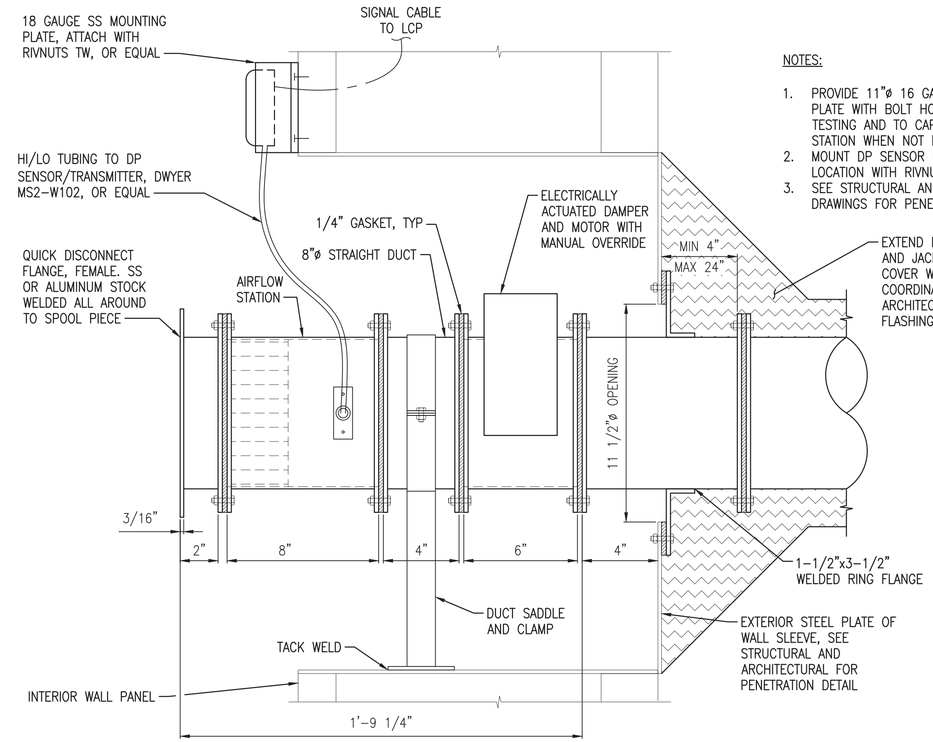

NOTES:

1. PROVIDE 11"ø 16 GAUGE BLANK PLATE WITH BOLT HOLES FOR LEAK TESTING AND TO CAP AIRFLOW STATION WHEN NOT IN USE.
2. MOUNT DP SENSOR IN ACCESSIBLE LOCATION WITH RIVNUTS, OR EQUAL.
3. SEE STRUCTURAL AND ARCHITECTURAL DRAWINGS FOR PENETRATION DETAIL.

SIDE VIEW

ENGINEERED VENTILATION ASSEMBLY (C1)

SCALE: 3" = 1'-0" M-100

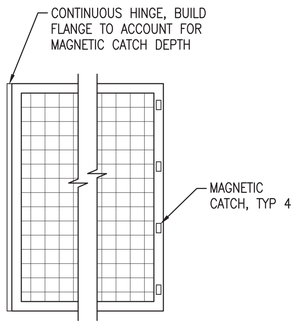

PASSAGEWAY ELEVATION

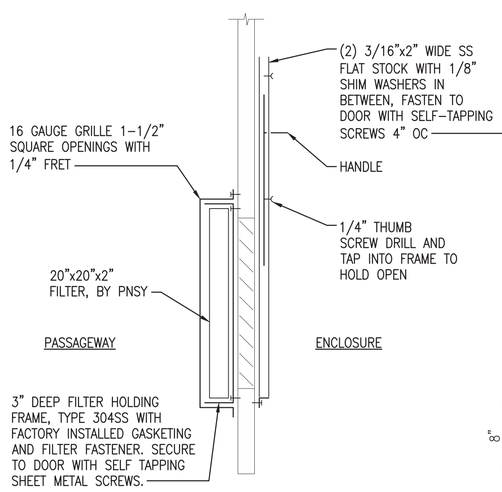

SECTION

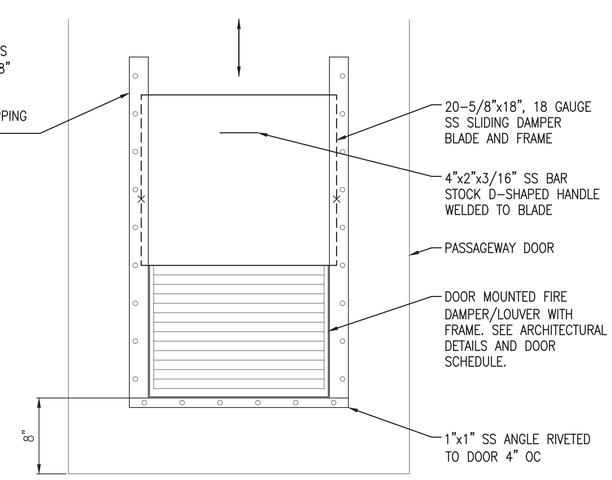

INTERIOR ELEVATION

PASSAGEWAY DOOR DAMPER DETAIL (A1)

SCALE: 1/2" = 1'-0" M-100, M-100A

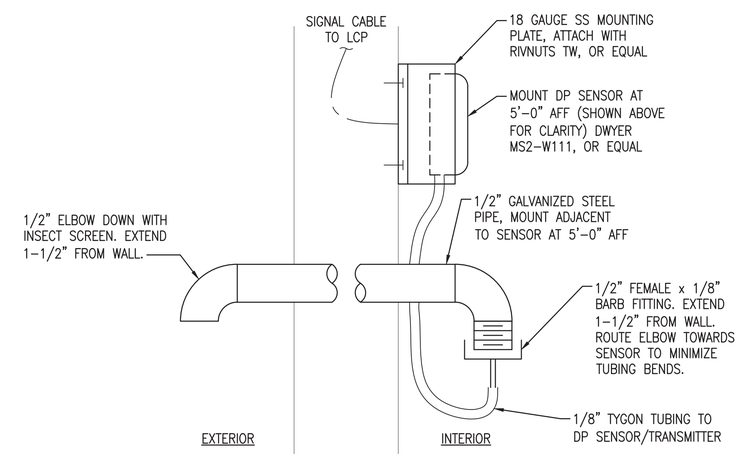

NOTES:

1. SEE ARCHITECTURAL DETAILS FOR SEALING REQUIREMENTS.
2. PENETRATION TO BE CUT BY INTERIOR WALL PANEL INSTALLERS, COORDINATE LOCATION ACCORDINGLY.

DIFFERENTIAL PRESSURE PORT DETAIL (A4)

SCALE: NTS M-100

Scale: 3" = 1'-0" (0, 3", 6", 9")

Scale: 1/2" = 1'-0" (0, 1', 2', 4')

SYM	DESCRIPTION	DATE	APPR
0	ISSUED FOR CONSTRUCTION	10/28/2016	CBC

NAVFAC

STATE OF MAINE PETER W. BROWN No. 5743 PROFESSIONAL ENGINEER 10/28/16 SEAL

Colby Company engineering

A/E INFO

APPROVED (SIGNATURE) David W. Greenfield

FOR COMMANDER NAVFAC

ACTIVITY: TIM FISHER C. 2370.6 BRANCH HEAD

SATISFACTORY TO DATE 10/28/2016

DES EAF DRW CSS CHK PWB

PMDM PETER STOCKLESS

BRANCH MANAGER IAN BODWELL

FEA/PM&E AMIN BAHROUR

FIRE PROTECTION PATRICK BAKAJ

DEPARTMENT OF THE NAVY
NAVAL FACILITIES ENGINEERING COMMAND
PUBLIC WORKS DEPARTMENT - MAINE

NAVAL FACILITIES ENGINEERING COMMAND ~ MID-ATLANTIC
NAVAL SHIPYARD - PORTSMOUTH, NH

PORTSMOUTH NAVAL SHIPYARD
KITTERY, ME

DRY DOCK #1 DEFUELING COMPLEX
DRE-7

MECHANICAL DETAILS

EPROJECT NO.: 1363311

CONSTR. CONTR. NO. N40085-17-C-5002

NAVFAC DRAWING NO. 12735064

SHEET 93 OF 117

M-501 | DD1-16-1145

DRAWFORM REVISION: 10 OCTOBER 2014

10/28/2016 7:09:16 AM X:\297 PORTSMOUTH NAVAL SHIPYARD\297.005.001 - DD#1 DEFUELING COMPLEX DESIGN\DRAWINGS\DRE7\SHEETS\M-501.DWG

NOTES

1. SEE SHEET M-001 FOR LEGEND, ABBREVIATIONS AND GENERAL NOTES.

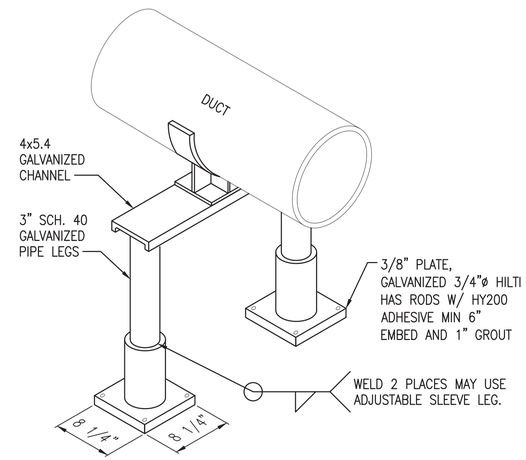

EXTERIOR DUCT SADDLE SUPPORT DETAIL (C4)

SCALE: NTS

M-201

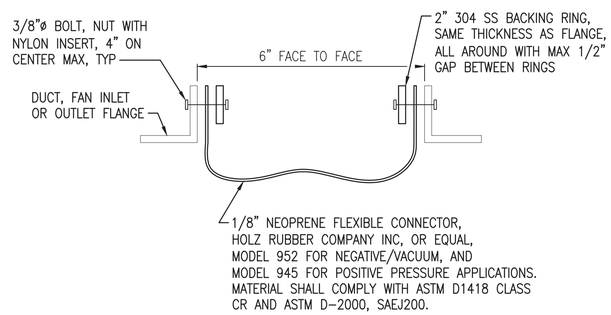

DUCT FLEX CONNECTOR DETAIL (B3)

SCALE: NTS

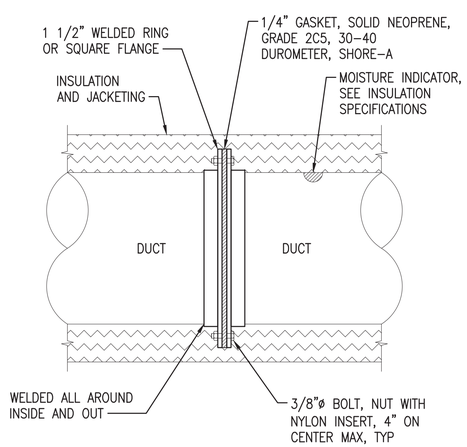

NOTES:

1. INSTALL FLANGED CONNECTIONS AT ALL ENCLOSURE PENETRATIONS WITH 4" ACCESS TO BOLTS.
2. PROVIDE STRIP OF WEATHERPROOF AND UV RESISTANT GREEN TAPE ON EXTERIOR OF INSULATION TO INDICATE FLANGE LOCATIONS. INDICATE "FLANGE LOCATION" WITH WEATHERPROOF LABEL OR TAG.

TYPICAL DUCT FLANGE DETAIL (A1)

SCALE: 3" = 1'-0"

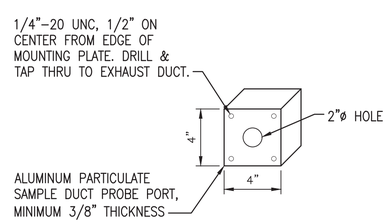

PARTICULATE SAMPLE PROBE MOUNTING PLATE DETAIL (A3)

SCALE: NTS

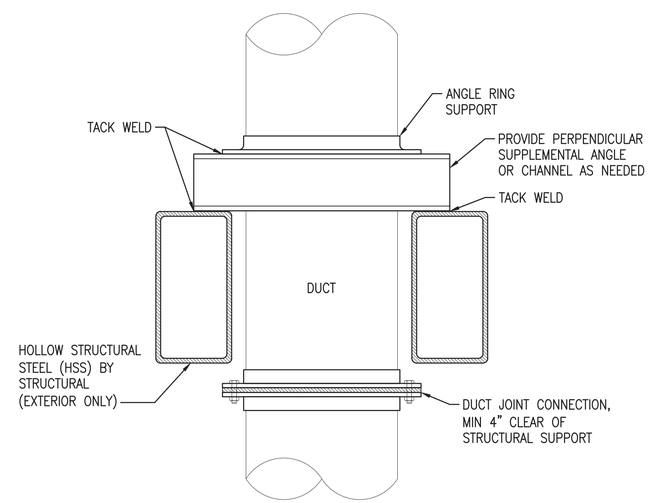

DUCT RISER SUPPORT DETAIL (A4)

SCALE: 3" = 1'-0"

0 3" 6" 9"
Scale: 3" = 1'-0"

SYM	DESCRIPTION	DATE	APPR
0	ISSUED FOR CONSTRUCTION	10/28/2016	CBC

NAVFAC

STATE OF MAINE PETER W. BROWN No. 5743 PROFESSIONAL ENGINEER
10/28/16 SEAL

Colby Company engineering
A/E INFO

APPROVED Daniel W. Greenfield FOR COMMANDER NAVFAC

ACTIVITY: TIM FISHER C. 2370.6 BRANCH HEAD

SATISFACTORY TO DATE 10/28/2016

DES EAF | DRW CSS | CHK PWB

PM/DM PETER STOCKLESS

BRANCH MANAGER IAN BODWELL

FEAD/PM/AE AMIN BAHROUR

FIRE PROTECTION PATRICK BAKAJ

DEPARTMENT OF THE NAVY
NAVAL FACILITIES ENGINEERING COMMAND
PUBLIC WORKS DEPARTMENT - MAINE

NAVAL FACILITIES ENGINEERING COMMAND ~ MID-ATLANTIC
NAVAL SHIPYARD - PORTSMOUTH NH

PORTSMOUTH NAVAL SHIPYARD
KITTERY, ME

DRY DOCK #1 DEFUELING COMPLEX
DRE-7

MECHANICAL DETAILS

EPROJECT NO.: 1363311

CONSTR. CONTR. NO. N40085-17-C-5002

NAVFAC DRAWING NO. 12735065

SHEET 94 OF 117

M-502 | DD1-16-1146

DRAWFORM REVISION: 10 OCTOBER 2014

10/28/2016 7:09:22 AM X:\297 PORTSMOUTH NAVAL SHIPYARD\297.005.001 - DD#1 DEFUELING COMPLEX DESIGN\DRAWINGS\DRE7\SHEETS\M-502.DWG

NOTES

1. SEE SHEET M-001 FOR LEGEND, ABBREVIATIONS AND GENERAL NOTES.

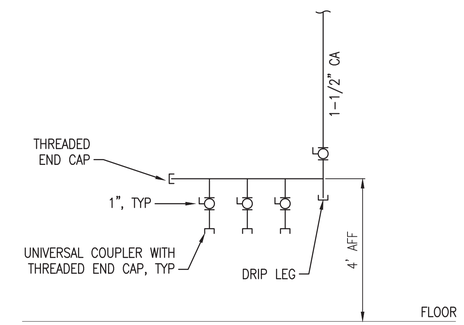

COMPRESSED AIR MANIFOLD DETAIL (D4)

SCALE: NTS — M-100, M-100A

KEYED NOTES

1. ONLY ONE COIL REFRIGERANT ENTRY AND EXIT CIRCUIT IS SHOWN. SYSTEM HAS MULTIPLE ENTRY AND EXIT CIRCUITS.
2. INSTALL APR VALVE AND ISOLATION VALVES IN FIELD IN ACCORDANCE WITH MANUFACTURER'S INSTALLATION RECOMMENDATION (NOT SHOWN FOR CLARITY).

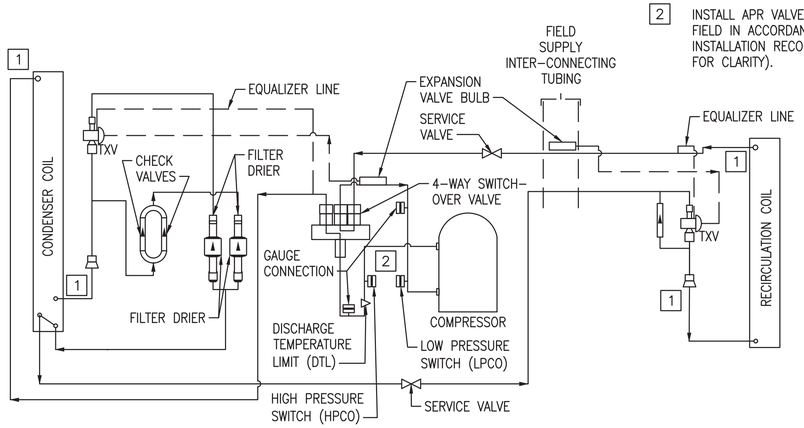

HEAT PUMP REFRIGERANT PIPING DETAIL (A2)

SCALE: NTS

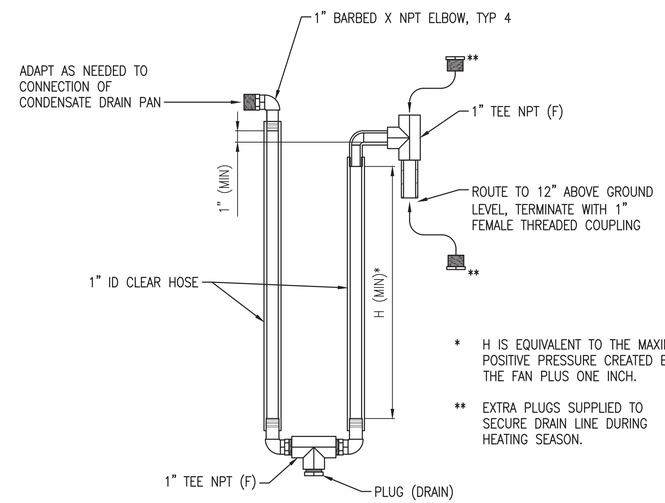

* H IS EQUIVALENT TO THE MAXIMUM POSITIVE PRESSURE CREATED BY THE FAN PLUS ONE INCH.

** EXTRA PLUGS SUPPLIED TO SECURE DRAIN LINE DURING HEATING SEASON.

NOTES:

1. THE GENERAL DIMENSIONS SHOWN ARE INTENDED TO ENSURE THE WATER LEVEL IS ALWAYS PRESENT IN THE CLEAR TUBING ON THE UPSTREAM SIDE OF THE BOTTOM FITTINGS.
2. NOT SHOWN: A SUPPORT PLATE OR ADJACENT STRUCTURE UPON WHICH TO SECURE THE TUBING AND FITTINGS.
3. THE PRIMING TEE IS USED TO PROVIDE AN EASY WAY TO FILL THE LOOP BY TEMPORARILY BLOCKING THE LOWER OPENING AND POURING WATER INTO THE TOP OPENING.
4. LOCATE TRAP WHERE IT CAN BE INSPECTED FOR DEBRIS AND WATER SEAL.
5. MATERIAL SHALL BE UV AND CORROSION RESISTANT.

BLOW-THROUGH CONDENSATE DRAIN LOOP ("P" TRAP) DETAIL (A4)

SCALE: NTS — M-505

SYM	DESCRIPTION	DATE	APPR
0	ISSUED FOR CONSTRUCTION	10/28/2016	CBC

NAVFAC

STATE OF MAINE — PETER W. BROWN No. 5743 — PROFESSIONAL ENGINEER — 10/28/16

Colby Company engineering

APPROVED BY: Daniel W. Greenfield — FOR COMMANDER NAVFAC

ACTIVITY: TIM FISHER, C. 2370.6 BRANCH HEAD — SATISFACTORY TO — DATE 10/28/2016

DES EAF | DRW CSS | CHK PWB

PMDM: PETER STOCKLESS

BRANCH MANAGER: IAN BODWELL

FEAD/PM&E: AMIN BAHROUR

FIRE PROTECTION: PATRICK BAKAJ

DEPARTMENT OF THE NAVY — NAVAL FACILITIES ENGINEERING COMMAND — PUBLIC WORKS DEPARTMENT - MAINE

NAVAL FACILITIES ENGINEERING COMMAND ~ MID-ATLANTIC — NAVAL SHIPYARD - PORTSMOUTH, NH

PORTSMOUTH NAVAL SHIPYARD — KITTERY, ME

DRY DOCK #1 DEFUELING COMPLEX DRE-7

MECHANICAL DETAILS

EPROJECT NO.: 1363311

CONSTR. CONTR. NO.: N40085-17-C-5002

NAVFAC DRAWING NO.: 12735066

SHEET 95 OF 117

M-503 | DD1-16-1147

DRAWFORM REVISION: 10 OCTOBER 2014

10/28/2016 7:09:27 AM X:\297 PORTSMOUTH NAVAL SHIPYARD\297.005.001 - DD#1 DEFUELING COMPLEX DESIGN\DRAWINGS\DRE7\SHEETS\M-503.DWG

NOTES

1. SEE SHEET M-001 FOR LEGEND, ABBREVIATIONS AND GENERAL NOTES.

DUCT LEGEND

— — — LEVEL 2 DUCT CONSTRUCTION PER DOE HDBK 1169-2003

——— LEVEL 4 DUCT CONSTRUCTION PER DOE HDBK 1169-2003

KEYED NOTES

1. 2'X2' HEPA FILTER HOUSING. 2" PRE-FILTER, 12" HEPA FILTER.
2. DX HEAT PUMP AND COOLING COIL.
3. ELECTRIC BACKUP HEATING COIL.
4. FAN.
5. DIFFERENTIAL PRESSURE PORT WITH SENSOR FOR SPACE PRESSURE CONTROL.
6. ELECTRIC UNIT HEATER FOR SPOT HEATING.
7. ROUND WELDED DUCTWORK.
8. SUPPLY GRILLE, BOTTOM OF GRILLE 34'-1 1/2" AFF.
9. MANUALLY OPERATED BLAST GATE FOR TRANSFER AIR FROM PASSAGEWAY.
10. MOTORIZED DAMPER.
11. FLUSH-RETURN AIR GRILLE, TYP 2. MAX CFM SHOWN FOR WHEN ENGINEERED VENTS ARE CLOSED.
12. 8" VENT HOSE FOR ENGINEERED VENTILATION, BY PNSY.
13. ENGINEERED VENT WITH QUICK DISCONNECT, MOTORIZED DAMPERS AND FLOW METER FOR ATTACHMENT OF FLEXIBLE DUCT.
14. MOTORIZED DAMPER FOR NEGATIVE DP CONTROL SET BY USER THRU LCP, EXHAUSTS TO ATMOSPHERE.
15. STRUCTURAL STEEL SKID TO HOUSE HVAC EQUIPMENT.
16. DIFFERENTIAL PRESSURE GAUGES, REMOTELY MOUNTED ON GAUGE PANEL (NOT SHOWN).
17. DUCT SILENCER.
18. AIRFLOW MEASURING STATION, DIGITAL DISPLAY AT LCP, LOCAL GAUGES AT GAUGE PANEL (NOT SHOWN). INTEGRAL WITH SILENCER ON FAN INLET ONLY.
19. PARTICULATE SAMPLE DUCT PROBE PORT, 1/4" TYGON UV RESISTANT, VACUUM RATED TUBING (OR EQUAL).
20. BUBBLE-TIGHT ELECTRICALLY-ACTUATED ADJUSTABLE DAMPER.
21. FLOW PROVING PRESSURE SWITCH, DWYER 616W-4 OR EQUAL. CONNECT TUBING WITH 1/4" WELDED HALF COUPLING AND HOSE BARB.
22. VARIABLE-AREA FLOW METER WITH FLOW ADJUSTING VALVE FOR AIR SAMPLING FLOW CONTROL, DWYER RMC RATE-MASTER. 120V POWER OUTLET FOR HEAT TRACE, REFER TO HVAC SKID SPECIFICATIONS. CONNECT TUBING WITH 1/4" WELDED HALF COUPLING AND HOSE BARB.

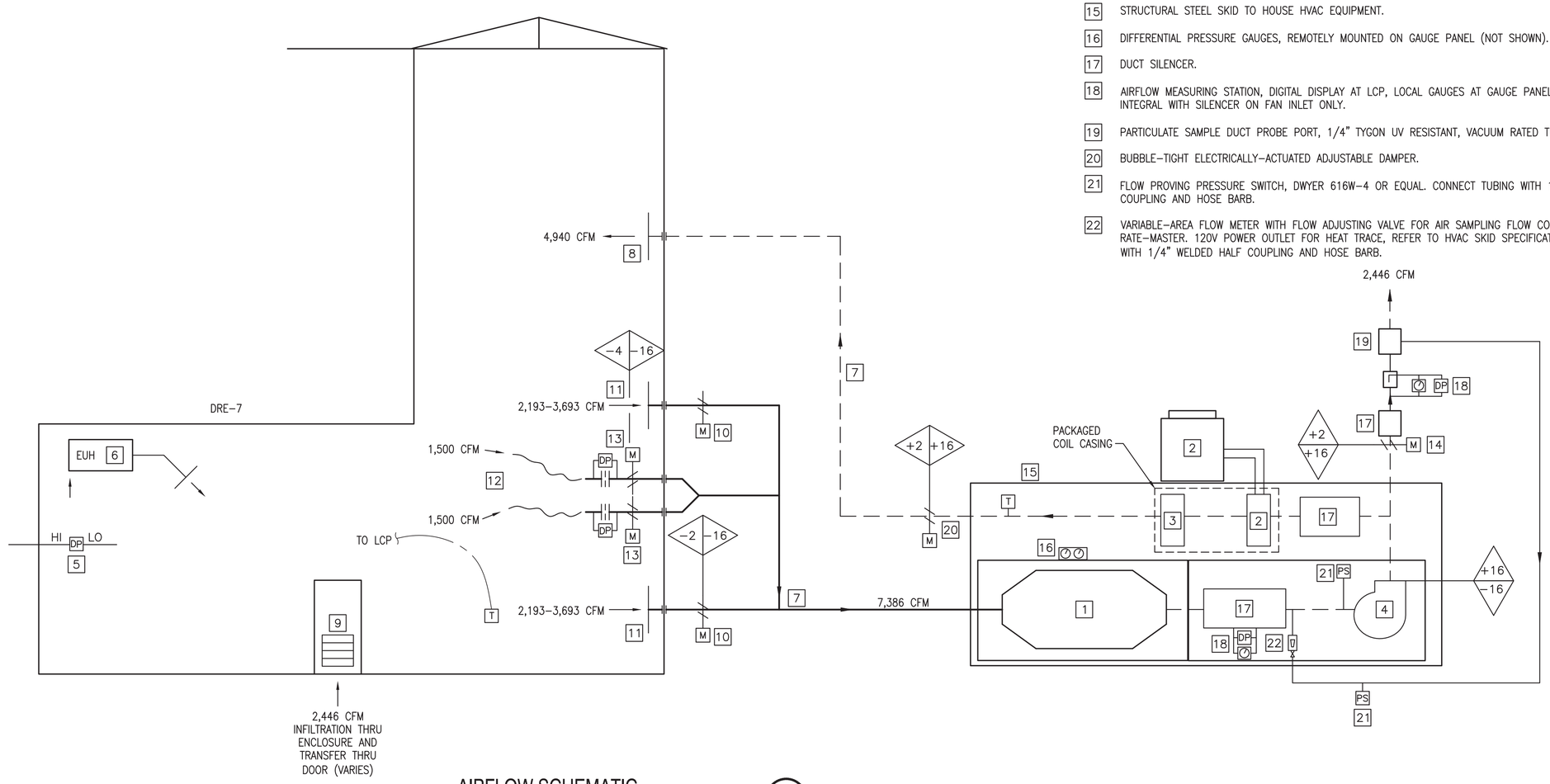

AIRFLOW SCHEMATIC

SCALE: NTS

A1

SYM	DESCRIPTION	DATE	APPR
0	ISSUED FOR CONSTRUCTION	10/28/2016	CBC

NAVFAC

STATE OF MAINE
PETER W. BROWN
No. 5743
PROFESSIONAL ENGINEER
10/28/16
SEAL

Colby Company engineering
A/E INFO

APPROVED
Daniel W. Greenfield
FOR COMMANDER NAVFAC

ACTIVITY
TIM FISHER
C. 2370.6 BRANCH HEAD

SATISFACTORY TO DATE 10/28/2016

DES EAF DRW CSS CHK PWB

PMDM PETER STOCKLESS

BRANCH MANAGER IAN BODWELL

FEAD/PM&E AMIN BAHROUR

FIRE PROTECTION PATRICK BAKAJ

DEPARTMENT OF THE NAVY
NAVAL FACILITIES ENGINEERING COMMAND
PUBLIC WORKS DEPARTMENT - MAINE

NAVAL FACILITIES ENGINEERING COMMAND ~ MID-ATLANTIC
NAVAL SHIPYARD - PORTSMOUTH, NH

PORTSMOUTH NAVAL SHIPYARD
KITTERY, ME

DRY DOCK #1 DEFUELING COMPLEX
DRE-7

AIRFLOW SCHEMATIC

EPROJECT NO.: 1363311

CONSTR. CONTR. NO.
N40085-17-C-5002

NAVFAC DRAWING NO.
12735067

SHEET 96 OF 117

M-504 | DD1-16-1148

DRAWFORM REVISION: 10 OCTOBER 2014

10/28/2016 7:09:30 AM X:\297 PORTSMOUTH NAVAL SHIPYARD\297.005.001 - DD#1 DEFUELING COMPLEX DESIGN\DRAWINGS\DRE7\SHEETS\M-504.DWG

NOTES

1. SEE SHEET M-001 FOR LEGEND, ABBREVIATIONS AND GENERAL NOTES.
2. THIS IS A CONCEPTUAL SCHEMATIC, REFER TO INDIVIDUAL EQUIPMENT SCHEDULES AND SPECIFICATION 23 74 00 PACKAGED, OUTDOOR, SKID-MOUNTED HEATING AND COOLING SYSTEM.
3. ENSURE MINIMUM STRAIGHT LENGTHS ARE ACHIEVED FOR AIRFLOW MEASURING STATIONS PER MANUFACTURER'S RECOMMENDATION.
4. INSTALL SHIMS AS NEEDED TO ENSURE SKID IS FLAT AND LEVEL. REFER TO SPECIFICATIONS FOR ANCHORING.
5. PROVIDE 1/8" PER FOOT DOWNWARD PITCH ON EXHAUST DUCT.

KEYED NOTES

1 MINIMIZE LENGTH OF EXHAUST AIR DUCT WHILE MAINTAINING STRAIGHT LENGTHS REQUIRED FOR AIRFLOW MEASURING STATION. CAP WITH SS BIRD SCREEN AND FLANGED END TO ALLOW FOR PRESSURE TESTING.

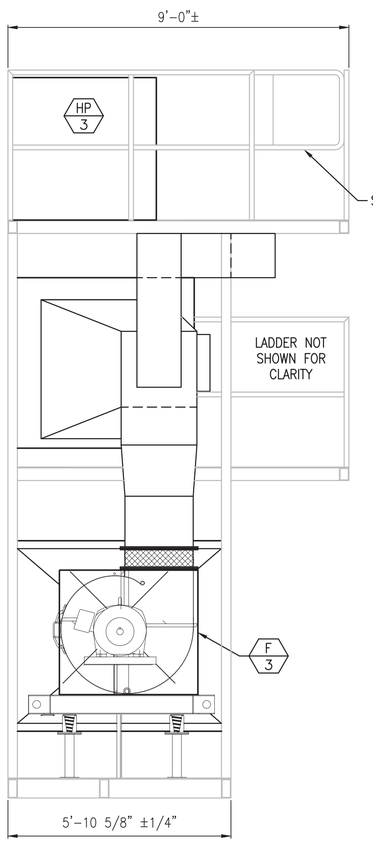

LEFT END VIEW

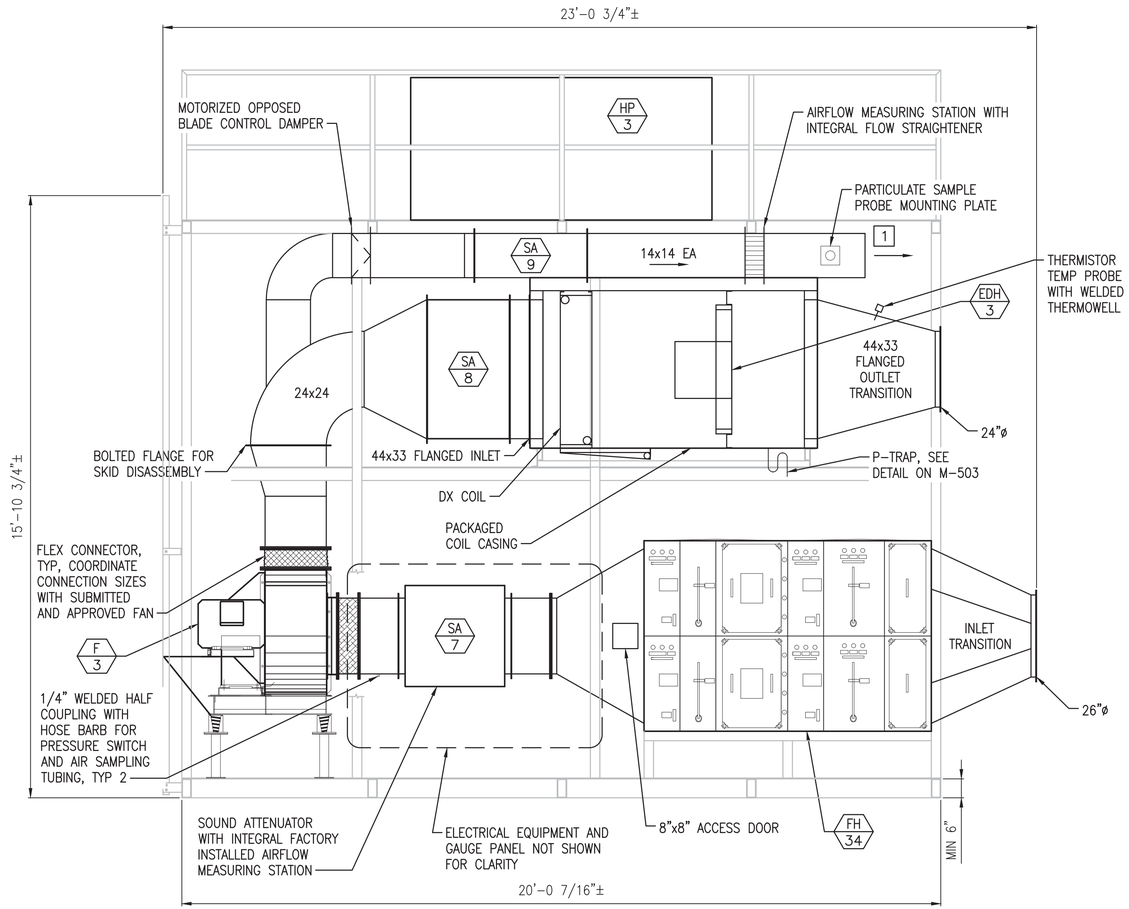

FRONT VIEW

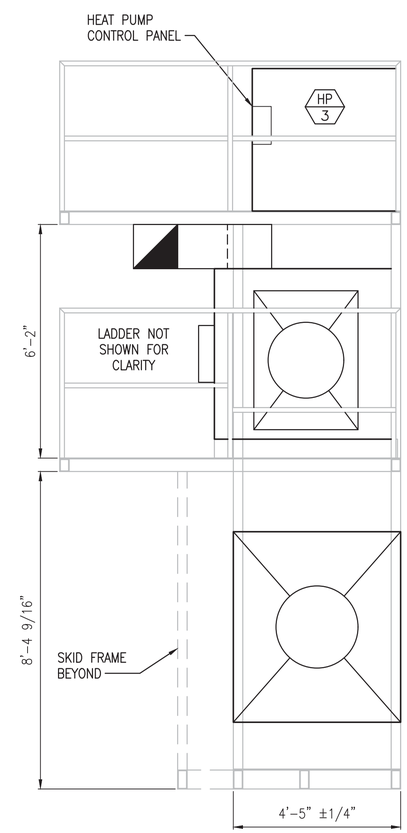

RIGHT END VIEW

VENTILATION SKID

SCALE: 1/2" = 1'-0"

M-100 A1

0 1' 2' 4'
Scale: 1/2" = 1'-0"

SYM	DESCRIPTION	DATE	APPR
0	ISSUED FOR CONSTRUCTION	10/28/2016	CBC

NAVFAC

STATE OF MAINE
PETER W. BROWN
No. 5743
REGISTERED PROFESSIONAL ENGINEER
10/28/16 SEAL

Colby Company engineering
A/E INFO

APPROVED
Daniel W. Greenfield
FOR COMMANDER NAVFAC

ACTIVITY: TIM FISHER
C. 2370.6 BRANCH HEAD

SATISFACTORY TO DATE 10/28/2016

DES	DRW	CHK
EAF	CSS	PWB

PMDM: PETER STOCKLESS
BRANCH MANAGER: IAN BODWELL
FEAD/PM&E: AMIN BAHROUR
FIRE PROTECTION: PATRICK BAKAJ

DEPARTMENT OF THE NAVY
NAVAL FACILITIES ENGINEERING COMMAND
PUBLIC WORKS DEPARTMENT - MAINE

NAVAL FACILITIES ENGINEERING COMMAND – MID-ATLANTIC
NAVAL SHIPYARD - PORTSMOUTH, NH

PORTSMOUTH NAVAL SHIPYARD
KITTERY, ME
DRY DOCK #1 DEFUELING COMPLEX
DRE-7
VENTILATION SKID

EPROJECT NO.: 1363311
CONSTR. CONTR. NO.: N40085-17-C-5002
NAVFAC DRAWING NO.: 12735068
SHEET 97 OF 117

M-505 | DD1-16-1149

DRAWFORM REVISION: 10 OCTOBER 2014

10/28/2016 7:09:34 AM X:\297 PORTSMOUTH NAVAL SHIPYARD\297.005.001 - DD#1 DEFUELING COMPLEX DESIGN\DRAWINGS\DRE7\SHEETS\M-505.DWG

DX HEAT PUMP SCHEDULE

UNIT NO	LOCATION	SERVES	COOLING OPERATING RANGE (°F)	HEATING OPERATING RANGE (°F)	HEATING CAPACITY (MBH)	DX COIL									HEAT PUMP ELECTRICAL				SYSTEM EER	WEIGHT (LBS)	MANUFACTURER AND MODEL (1)	NOTES
						TOTAL MBH	REFRIG TYPE	AIRFLOW (CFM)	SUMMER AIR DATA		WINTER AIR DATA		MAX FACE VELOCITY (FPM)	APD (IN)	MCA	MAX CKT BKR	POWER	SYSTEM KW/COP				
									EAT DB/WB (°F)	LAT DB/WB (°F)	EAT DB (°F)	LAT DB (°F)										
HP-3	SKID	DRE-7	65 TO 125	-18 TO 72	180	198.8	R-410A	4,940	83/67	55/54	68	119	500	0.78	33.4	40	460/3	21.6/3.2	10.5	848	TRANE TWA180E	1-8

NOTES:
1. PROVIDE BACNET INTERFACE FOR MONITORING AND CONTROL, WITH BACNET TO ETHERNET CONVERTER.
2. PROVIDE INTEGRAL STARTER UNIT.
3. PROVIDE MANUFACTURER STAINLESS STEEL DRAIN PANS FOR CONDENSATE COLLECTION. ENSURE THE DRAIN PAN HAS PIPING WITH A LOOP SEAL (P-TRAP) AND THE LOOP IS LOCATED WHERE IT CAN BE INSPECTED FOR DEBRIS AND WATER SEAL. PROVIDE PROVISIONS TO ADD WATER TO THE LOOP TO CREATE A SEAL IF ONE IS NOT PRESENT.
4. PROVIDE WITH APR VALVE FOR CAPACITY CONTROL/REDUCTION. RAWAL DEVICES, OR EQUAL. FIELD INSTALLED.
5. FACTORY SUPPLIED BOLTED FLANGES ON COIL CASING.
6. PROVIDE FACTORY SELECTED TXV VALVES FOR FIELD INSTALLATION.
7. PROVIDE PACKAGED COIL CASING FOR DX HEAT PUMP COIL AND ELECTRIC HEAT COIL; STAINLESS STEEL CASING FOR DX HEAT PUMP COIL.
8. WINTER SUPPLY AIR TEMPERATURE SUPPLEMENTED BY ASSOCIATED EDH AS NEEDED TO MEET DESIGN.

FILTER HOUSING SCHEDULE

UNIT NO	LOCATION	SERVES	TYPE	MAX CFM AIRFLOW	DESIGN CFM AIRFLOW	MAX FACE VEL (FPM)	TOTAL HOUSING PD		AVERAGE DUST-SPOT EFFICIENCY	WEIGHT (LBS)	MANUFACTURER (1)	PREFILTER/TEST HOUSING MODEL (1)	HEPA HOUSING MODEL (1)	OUTLET TEST HOUSING MODEL (1)	NOTES
							CLEAN (IN WC)	DIRTY (IN WC)							
FH-34	SKID	DRE-7	2" PREFILTER 12" HEPA	8,000	7,386	500	1.46	5.17	25-30% >99.97%	2,816	FLANDERS	TSI-2H2W-2GG-304-D1	BF1-2H2W-GGF-304-D1	TSO-2H2W-GG-304-D1	1-6

NOTES:
1. PROVIDE WEATHER CAP.
2. PROVIDE INTEGRAL FILTER GAUGES REMOTELY MOUNTED ON HVAC SKID GAUGE PANEL.
3. PROVIDE UP AND DOWNSTREAM IN-PLACE TEST HOUSINGS.
4. ALL WELDED TRANSITIONS WITH BOLTED DUCT CONNECTIONS.
5. LEFT HAND ACCESS.
6. TOTAL PD ACCOUNTS FOR DIRTY PREFILTERS @ 1" WC AND HEPA FILTERS @ 4" WC.

FAN SCHEDULE

UNIT NO	LOCATION	SERVES	TYPE	CONFIGURATION	CFM	TOTAL SP (IN WG)	HP	RPM	DRIVE	VOLTS	PHASE	MOTOR TYPE	MANUFACTURER AND MODEL (1)	NOTES
F-3	SKID	DRE-7	CENTRIFUGAL	ARR 4, CCW ROT, UPBLAST	7,386	15.4	30	1,841	DIRECT	460	3	TEFC	TWIN CITY FAN RBA-917	1-6

NOTES:
1. PROVIDE MOTOR SHAFT GROUNDING RING.
2. COORDINATE WITH INLET AND OUTLET SILENCERS.
3. SUPPLY WITH PREMIUM EFFICIENCY MOTOR AND VFD.
4. TYPE B SPARK RESISTANT CONSTRUCTION.
5. CORROSION RESISTANT ZINC-RICH POWDER BASE COAT AND POLYESTER URETHANE POWDER TOP COAT.
6. C-FACE MOTOR MOUNT.

KEYED NOTES:

(1) MANUFACTURERS NAME AND MODEL NUMBER ARE USED FOR DESCRIPTIVE PURPOSES ONLY AND ARE INTENDED TO INDICATE THE STANDARD OF MATERIAL OR ARTICLES REQUIRED. DESIGN IS PREDICATED AROUND LISTED MANUFACTURERS AS NOTED ON SCHEDULES AND IS NOT INTENDED TO LIMIT THE CONTRACTOR TO ONE MANUFACTURER.

RETRACTABLE ROOF EQUIPMENT SCHEDULE

UNIT NO	DESCRIPTION	RATING	GEAR RATIO	WHEEL DIAMETER (IN)	WHEEL TREAD WIDTH (IN)	RAIL WIDTH MIN/MAX (IN)	MANUFACTURER AND MODEL (1)	NOTES
GM-1	GEAR MOTOR, INVERTER DUTY W/ MANUAL BRAKE RELEASE	1 HP	90:1	–	–	–	DEMAG WUE30DD ZBA80A4 B007	1,3
GM-2	GEAR MOTOR, INVERTER DUTY W/ MANUAL BRAKE RELEASE	1 HP	90:1	–	–	–	DEMAG WUE30DD ZBA80A4 B007	1,3
WB-1	WHEELBLOCK, DOUBLE FLANGE	10,000 LB	–	6.3	1.85	1.93/2.24	DEMAG DRS160A47KH	2
WB-2	WHEELBLOCK, DOUBLE FLANGE	10,000 LB	–	6.3	1.85	1.93/2.24	DEMAG DRS160A47KH	2
WB-3	WHEELBLOCK, DOUBLE FLANGE	10,000 LB	–	6.3	1.85	1.93/2.24	DEMAG DRS160A47KH	2
WB-4	WHEELBLOCK, DOUBLE FLANGE	10,000 LB	–	6.3	1.85	1.93/2.24	DEMAG DRS160A47KH	2

NOTES:
1. 460V/3PH/60Hz
2. PROVIDE HORIZONTAL GUIDE ROLLERS
3. COORDINATE ORIENTATION OF GEARMOTOR OUTPUT SHAFT AND ELECTRICAL JUNCTION BOX WITH LEFT OR RIGHT HAND OPERATION.

DIFFUSER/REGISTER/GRILLE SCHEDULE

UNIT NO	NECK SIZE	MAX PRESSURE DROP (IN WC)	MAX NOISE CRITERIA	CFM RANGE	TYPE/SIZE (INXIN)	MANUFACTURER AND MODEL (1)	NOTES
S-1	60x30	0.06	27	0-5,000	60x30	PRICE MSSG WIRE MESH GRILLE	1-3
R-1	36x36	0.33	39	0-3,693	36x36	PRICE MSSG WIRE MESH GRILLE	1-3

NOTES:
1. WHITE POWDER COAT FINISH OR STAINLESS STEEL.
2. SUPPLY WITHOUT SECURITY BARS.
3. BOLTED TO PENETRATION SLEEVE FOR REMOVAL.

SOUND ATTENUATOR SCHEDULE

UNIT NO	SYSTEM	SERVES	QTY	CONNECTION DIMENSIONS/ID		LENGTH (IN)	AIR FLOW (CFM)	VELOCITY (FPM)	P.D. (INWG)	DYNAMIC INSERTION LOSS (dB)									VAW MODEL	NOTES
				W (IN)	H (IN)					32	63	125	250	500	1000	2000	4000	8000		
SA-7	DRE	INLET	1	26	32	36	7,386	-2,528	0.49	–	5	11	14	17	19	11	10	7	RSA-32V80	1-4
SA-8	DRE	DISCHARGE	1	44	43	24	4,940	409	0.14	–	5	8	11	16	24	32	17	13	RSA-18V269	1,3,4
SA-9	DRE	EXHAUST	1	14	14	36	2,446	1,797	0.17	–	3	4	8	15	20	16	15	11	RSA-15V60	1,3,4

NOTES:
1. PROVIDE WITH FLANGED, BOLTED CONNECTIONS.
2. 26"Ø FLANGED, BOLTED CONNECTION. PROVIDE INTEGRAL STATIC AND TOTAL PRESSURE PROBES FOR AIRFLOW MEASUREMENT. PROVIDE WELDED COMPANION FLANGE AND GASKET FOR AIRTIGHT PROBE INSTALLATION.
3. MINIMUM 18 GA WELDED CASING TO WITHSTAND MAX PRESSURE OF ASSOCIATED FAN.
4. RATED FOR EXTERIOR USE.

ELECTRIC HEATER SCHEDULE

UNIT NO	SERVES	CFM	HEATING (MBH)	ELECTRICAL			MAX AMP RATING	WEIGHT (LBS)	MANUFACTURER AND MODEL (1)	NOTES
				KW	VOLTS	PHASE				
EUH-1	GROUND FLOOR	350	10.2	3	460	3	3.6	27	QMARK MUH03-41	1
EDH-3	SUPPLY AIR	4,940	249	73	460	3	94.5	–	THERMOLEC TYPE SC	2

NOTES:
1. SUPPLY WITH REMOTE THERMOSTAT AND MOUNTING BRACKET.
2. SUPPLIED WITH HVAC SKID IN PACKAGED CASING WITH COOLING COIL.

SYM	DESCRIPTION	DATE	APPR
0	ISSUED FOR CONSTRUCTION	10/28/2016	CBC

NAVFAC

STATE OF MAINE PETER W. BROWN No. 5743 PROFESSIONAL ENGINEER 10/28/16 SEAL

Colby Company engineering A/E INFO

APPROVED Commander Daniel W. Greenfield FOR COMMANDER NAVFAC

ACTIVITY: TIM FISHER C. 2370.6 BRANCH HEAD

SATISFACTORY TO DATE 10/28/2016

DES EAF DRW CSS CHK PWB

PMDM PETER STOCKLESS

BRANCH MANAGER IAN BODWELL

FEAD/PM&E AMIN BAHROUR

FIRE PROTECTION PATRICK BAKAJ

DEPARTMENT OF THE NAVY
NAVAL FACILITIES ENGINEERING COMMAND
PUBLIC WORKS DEPARTMENT - MAINE

NAVAL FACILITIES ENGINEERING COMMAND – MID-ATLANTIC
NAVAL SHIPYARD - PORTSMOUTH, NH

PORTSMOUTH NAVAL SHIPYARD
DRY DOCK #1 DEFUELING COMPLEX
DRE-7
KITTERY, ME

MECHANICAL SCHEDULES

EPROJECT NO.: 1363311

CONSTR. CONTR. NO. N40085-17-C-5002

NAVFAC DRAWING NO. 12735069

SHEET 98 OF 117

M-601 | DD1-16-1150

DRAWFORM REVISION: 10 OCTOBER 2014

10/28/2016 7:09:38 AM X:\297 PORTSMOUTH NAVAL SHIPYARD\297.005.001 - DD#1 DEFUELING COMPLEX DESIGN\DRAWINGS\DRE7\SHEETS\M-601.DWG

LIGHTING

- 2x4 FLUORESCENT FIXTURE
  - Ab — ASSOCIATED CONTROL DEVICE
  - FIXTURE TYPE (SEE LIGHT FIXTURE SCHED.)
- 1x4 FLUORESCENT FIXTURE
- WALL MOUNTED FIXTURES
- PORTABLE WORK LIGHT
- EXIT SIGN, CEILING MOUNTED
  - SHADING INDICATES SIGN FACE
  - ARROW INDICATES EGRESS DIRECTION
- EXIT SIGN, WALL MOUNTED
- DUAL HEAD EMERGENCY LIGHT BATTERY PACK
- REMOTE EMERGENCY LIGHTING HEAD
- AA — WALLPACK
  - FIXTURE TYPE (SEE LIGHT FIXTURE SCHED.)
- HOME RUN
- S_3 — 3-WAY TOGGLE SWITCH
- S_4 — 4-WAY TOGGLE SWITCH
- S_a — SINGLE POLE TOGGLE SWITCH
  - INDICATES CONTROLLED FIXTURE
- LC — LIGHTING CONTACTOR
- TC — TIME CLOCK
- AA,45 — FLOOD LIGHT
  - INDICATES MOUNTING ANGLE (FROM VERTICAL)
  - FIXTURE TYPE (SEE LIGHT FIXTURE SCHED.)

COMMUNICATIONS

- TELEPHONE SYSTEM WALL JACK
- DATA SYSTEM OUTLET
- COMBINATION VOICE/DATA SYSTEM OUTLET
- S2 — SPEAKER, CEILING MOUNTED
  - 1 – FLUSH
  - 2 – SURFACE
  - 3 – HORN
  - 4 – DUAL HORN
- S — SPEAKER, WALL MOUNTED
- HS — INTERCOM SYSTEM HANDS-FREE STATION
- DS — INTERCOM SYSTEM DOOR STATION
- CCTV — CLOSED CIRCUIT TELEVISION OUTLET, MOUNT 18" AFF UNLESS OTHERWISE NOTED

SECURITY

- IDS DS — INTRUSION DETECTION SYSTEM ALARM POINT
  - DS – MAGNETIC DOOR SWITCH
  - MS – MOTION SENSOR
  - C – CAMERA
- CARD — SECURITY SYSTEM CARD READER

POWER

- 60 (4) — NON-FUSED SAFETY SWITCH
  - NEMA ENCLOSURE
  - AMPERE RATING
- (4) F 60AS 40AF — FUSED SAFETY SWITCH, TOP NUMBER INDICATES SWITCH AMPERE RATING, LOWER NUMBER INDICATES FUSE RATING
  - NEMA ENCLOSURE
- 1 (4) — MAGNETIC MOTOR STARTER, FVNR UNLESS INDICATED OTHERWISE
  - NEMA ENCLOSURE
  - NEMA SIZE (TYP.)
- 5 XP — ELECTRIC MOTOR, NUMBER INDICATES HORSEPOWER RATING
  - XP – EXPLOSION PROOF
- CONDUIT TURNING UP
- CONDUIT TURNING DOWN
- E — DUPLEX RECEPTACLE, NEMA 5-20R
  - E – INSTALLED ON EMERGENCY CIRCUIT
  - IG – ISOLATED GROUND
  - S – SWITCHED RECEPTACLE
- WP — GFCI DUPLEX RECEPTACLE, NEMA 5-20R
  - WEATHER PROOF
- POWER RECEPTACLE, 250 VOLT NEMA CONFIGURATION AS NOTED
- POWER RECEPTACLE, 440 VOLT NEMA CONFIGURATION AS NOTED
- PANELBOARD, NORMAL POWER
- PANELBOARD, EMERGENCY POWER
- CB 100A — ENCLOSED CIRCUIT BREAKER
  - AMPERE RATING
- J — JUNCTION BOX, SIZE AS REQUIRED
- M — MANUAL MOTOR STARTER, TOGGLE OPERATED; MULTIPLE PHASE, 1, 2, OR 3 POLE AS REQUIRED; PROVIDE WITH INTEGRAL OVERLOAD PROTECTION
- W — WALL BOX (FLUSH MOUNTED, UNLESS NOTED)
- T — TERMINAL BLOCK
- VFD — VARIABLE FREQUENCY DRIVE
- PB — PUSHBUTTON SWITCH, MOUNTED 48" AFF
- EPO — EMERGENCY POWER OFF PUSH BUTTON STATION

SITE/GROUNDING

- COPPER CLAD STEEL GROUND ROD
- EXOTHERMIC WELD CONNECTION
- G — BARE COPPER CONDUCTOR EXPOSED
- G — BARE COPPER CONDUCTOR BELOW GRADE
- G — BARE COPPER CONDUCTOR EMBEDDED IN CONCRETE
- EGB — ELECTRICAL SERVICE GROUND BUS
- TGB — TELECOMMUNICATIONS GROUNDING BLOCK
- CEE — CONCRETE ENCASED ELECTRODE
- UE — UNDERGROUND ELECTRIC

LINE TYPES

- EXISTING
- NEW
- DEMOLITION
- MATCHLINE
- PART PLAN OUTLINE

ONE-LINE DIAGRAM

- X — MOLDED CASE CIRCUIT BREAKER
  - AMPS
- DISCONNECT, ISOLATION OR SAFETY SWITCH
- FUSED CUTOUT
- FUSED LOAD BREAK SWITCH
- MEDIUM VOLTAGE MOTOR STARTER
- CAPACITOR
- DRAWOUT DEVICE
- GROUND
- FUSE
- CONTACTOR
- POWER TRANSFORMER
  - OA – LIQUID TYPE SELF COOLED
  - AA – DRY TYPE SELF COOLED
  - FA – FAN COOLED
  - CONNECTION (DELTA-WYE)
- 1 — MAGNETIC MOTOR STARTER
  - FVNR UNLESS OTHERWISE NOTED
  - FVR – FULL VOLTAGE REVERSING
  - RVAT – REDUCING VOLTAGE AUTO TRANSFORMER
  - 2S – TWO SPEED
  - NEMA SIZE
- 1/2 — MOTOR, NUMBER INDICATES HORSEPOWER
- KWH — METER

A	AMMETER
HZ	FREQUENCY METER
KWH	KILOWATT HOUR
KVAR	KILOVAR METER
PZ	POWER FACTOR METER
V	VOLTMETER
VAR	VAR METER
W	WATTMETER
WH	WATT HOURMETER

- DPM — DIGITAL POWER METER
- SPD — SURGE PROTECTIVE DEVICE
- MALE PLUG
- FEMALE RECEPTACLE
- DISCONNECT INTERLOCKED RECEPTACLE

ABBREVIATIONS

AMP	AMPERE
AFF	ABOVE FINISHED FLOOR
AFG	ABOVE FINISHED GRADE
AHJ	AUTHORITY HAVING JURISDICTION
AIC	AMPERE INTERRUPTING CAPACITY
AWG	AMERICAN WIRE GAUGE
BFG	BELOW FINISHED GRADE
BLDG	BUILDING
BOS	BOTTOM OF STEEL
C	CONDUIT
CATV	CABLE TELEVISION
CB	CIRCUIT BREAKER
CCTV	CLOSED CIRCUIT TELEVISION
CT	CURRENT TRANSFORMER
CU	COPPER
DB	DIRECT BURIED
DISCO	DISCONNECT
DN	DOWN
EMT	ELECTRICAL METALLIC TUBING
EWC	ELECTRIC WATER COOLER
EWH	ELECTRIC WATER HEATER
EQP	EQUIPMENT
EXIST	EXISTING
FAA	FIRE ALARM ANNUNCIATOR
FACP	FIRE ALARM CONTROL PANEL
FBO	FURNISHED BY OTHERS
FLR	FLOOR
FVNR	FULL VOLTAGE NON REVERSING
FWE	FURNISHED WITH EQUIPMENT
FU	FUSE
GEN	GENERATOR
GFCI	GROUND FAULT CIRCUIT INTERRUPT
CLG	CEILING
GND	GROUND
HP	HORSEPOWER
HTR	HEATER
IG	ISOLATED GROUND
IMC	INTERMEDIATE METAL CONDUIT
K	KILO
KA	KILO-AMP
KCMIL	THOUSAND CIRCULAR MILS
KV	KILOVOLT
KVA	KILOVOLT-AMPERE
KW	KILOWATT
KWH	KILOWATT-HOUR
LA	LIGHTNING ARRESTER
LTG	LIGHTING
LFMC	LIQUID-TIGHT FLEXIBLE METAL CONDUIT
MAX	MAXIMUM
MC	METAL CLAD
MCB	MAIN CIRCUIT BREAKER
MFR	MANUFACTURER
MLO	MAIN LUG ONLY
MOP	MAXIMUM OVERCURRENT PROTECTION
MS/TP	MASTER-SLAVE TOKEN-PASSING
MTD	MOUNTED
MV	MEDIUM VOLTAGE
NC	NORMALLY CLOSED
NEC	NATIONAL ELECTRIC CODE
NEG	NEGATIVE
NEUT	NEUTRAL
NIC	NOT IN CONTRACT
NO	NORMALLY OPEN
NTS	NOT TO SCALE
PH	PHASE
PLC	PROGRAMMABLE LOGIC CONTROLLER
PV	PHOTOVOLTAIC
PVC	POLYVINYL CHLORIDE
RM	ROOM
RGS	RIGID GALVANIZED STEEL CONDUIT
RSC	RIGID STEEL CONDUIT
RTU	ROOF TOP UNIT
SWBD	SWITCHBOARD
TGB	TELECOMMUNICATIONS GROUNDING BUSBAR
TOS	TOP OF STEEL
TANSF	TRANSFORMER
TVSS	TRANSIENT VOLTAGE SURGE SUPPRESSOR
TX	TRANSFORMER
V	VOLT
VA	VOLT-AMPERE
VFD	VARIABLE FREQUENCY DRIVE
WM	WATT METER
WP	WEATHER PROOF
XFMR	TRANSFORMER
XP	EXPLOSION PROOF

GENERAL NOTES

1. ALL GENERAL NOTES, SYMBOL LISTS AND DETAILS ARE TO BE CONSIDERED AS APPLICABLE TO ALL ELECTRICAL DRAWINGS FOR THIS PROJECT. SYMBOLS AND ABBREVIATIONS SHOWN ON THIS SHEET ARE FOR REFERENCE ONLY AND DO NOT INDICATE THEIR INCORPORATION IN THE DESIGN.
2. ALL WORK SHALL BE PERFORMED IN ACCORDANCE WITH NFPA-70, NATIONAL ELECTRICAL CODE (NEC) 2014.
3. ALL CONDUCTOR MATERIAL, INCLUDING WIRING, PANELBOARD BUSES, TRANSFORMER WINDINGS, AND GROUNDING SHALL BE COPPER. ALUMINUM CONDUCTORS SHALL NOT BE ALLOWED.
4. UNLESS OTHERWISE NOTED, WIRING SHALL BE 2#12 AWG CONDUCTORS AND #12 GND. HOME RUNS FED FROM 20A-1P CIRCUITS IN EXCESS OF 100 FEET SHALL BE #10 AWG.
5. FLEXIBLE CONNECTIONS TO MOTORS SHALL BE LIQUID TIGHT FLEXIBLE METAL CONDUIT, UNLESS OTHERWISE NOTED.
6. LIGHTING TOGGLE SWITCHES SHALL BE COMMERCIAL SPECIFICATION GRADE 277/120 VOLT, SIDE WIRED AND PROVIDED WITH GROUNDING SCREW. LEVITON, PASS AND SEYMOUR OR APPROVED EQUAL.
7. CONVENIENCE RECEPTACLES SHALL BE COMMERCIAL SPECIFICATION GRADE GROUNDING TYPE NEMA 5-20R, SIDE WIRED. LEVITON, PASS AND SEYMOUR OR APPROVED EQUAL.
8. GFCI CONVENIENCE RECEPTACLES SHALL BE FEED THRU TYPE WITH SINGLE GFCI AT START OF CIRCUIT FEEDING NON-GFCI TYPE RECEPTACLES.
9. PROVIDE WALL PLATES FOR ALL WIRING DEVICES. ALL PLATES SHALL BE STAINLESS STEEL.
10. ALL INTERIOR DISTRIBUTION AND BRANCH WIRING SHALL BE 600V, COPPER WITH THHN/THWN INSULATION, UNLESS OTHERWISE NOTED. ALL EXTERIOR DISTRIBUTION AND BRANCH WIRING SHALL BE 600V, COPPER WITH XHHW INSULATION.
11. MOUNT ALL DISCONNECTS AND MOTOR STARTERS IN AN ACCESSIBLE LOCATION WITHIN SIGHT OF THE LOAD SERVED, UNLESS OTHERWISE INDICATED ON PLANS.
12. UNLESS OTHERWISE NOTED CONVENIENCE RECEPTACLES SHALL BE MOUNTED 18-INCHES AFF, PHONE SYSTEM OUTLETS 60-INCHES AFF, INTERCOM SYSTEM OUTLETS 60-INCHES AFF, AND LIGHTING TOGGLE SWITCHES 48-INCHES AFF.
13. ALL PENETRATIONS THROUGH FLOORS, RATED WALLS AND PARTITIONS SHALL BE SEALED WITH UL APPROVED FIRE SEALANT MATERIAL TO MAINTAIN THE RATING OF SEPARATION.
14. COORDINATE ALL EQUIPMENT CONNECTIONS – INCLUDING DISCONNECTING MEANS, OVERCURRENT PROTECTION, AND WIRE SIZING – WITH SELECTED MANUFACTURERS' RECOMMENDED INSTRUCTIONS.
15. PROVIDE ALL MOUNTING HARDWARE NECESSARY FOR A COMPLETE INSTALLATION. MOUNT EQUIPMENT AND ROUTE CONDUIT SO AS NOT TO INTERFERE WITH OPERATIONS SUCH AS DOOR SWINGS, MECHANICAL EQUIPMENT, ETC.
16. MANUFACTURERS NAME AND MODEL NUMBERS ARE USED THROUGHOUT THE PROJECT FOR DESCRIPTIVE PURPOSES ONLY AND ARE INTENDED TO INDICATE THE STANDARD OF MATERIAL OR ARTICLES REQUIRED. DESIGN IS PREDICATED AROUND LISTED MANUFACTURERS AS NOTED ON SCHEDULES AND NOTES AND IS NOT INTENDED TO LIMIT THE CONTRACTOR TO ONE MANUFACTURER.
17. CONTRACTOR SHALL LABEL ALL ELECTRICAL INFRASTRUCTURE INCLUDING PANELBOARDS, DISCONNECTS, JUNCTION BOXES, RECEPTACLES, TRANSFORMERS, AND CONTROL BOXES IN ACCORDANCE WITH THE PROJECT DRAWINGS, PROJECT SPECIFICATIONS, AND PNS LABELING STANDARDS. LABELING SHALL CONSIST OF EQUIPMENT, POWER SOURCE, POWER FEED, ARC-FLASH REQUIREMENTS, AND CLEARANCE REQUIREMENTS AT A MINIMUM.
18. ALL EXTERIOR ELECTRICAL BOXES SHALL BE WIRED WITH A DRIP LOOP TO PREVENT WATER INFILTRATION INTO THE BOXES. FOR ALL LOCATIONS WHERE POSSIBLE, ENTRY INTO THE BOXES SHALL BE FROM/TO THE BOTTOM OF THE ELECTRICAL BOXES. WHERE BOTTOM ENTRY NOT POSSIBLE, A MEANS OF WEATHER PROTECTION SHALL BE PROVIDED.
19. ALL SECURITY SYSTEM CARD READERS, SURVEILLANCE CAMERAS, AND MOTION SENSORS SHALL BE INSTALLED AND WIRED BY THE GOVERNMENT. CONTRACTOR SHALL PROVIDE PATHWAYS TO THE ACE FOR ALL DEVICE WIRING. CONTRACTOR SHALL PROVIDE AND INSTALL DOOR MAGNETIC SWITCHES, WIRE THEM, THEN RUN THE WIRES TO THE SECURITY CONNECTION POINT IN ACE-3, WHERE THEY WILL BE CONNECTED BY THE GOVERNMENT.

SYM	DESCRIPTION	DATE	APPR
0	ISSUED FOR CONSTRUCTION	10/28/2016	CBC

NAVFAC

STATE OF MAINE — JASON M. BEAULIEU No. 13441 — LICENSED PROFESSIONAL ENGINEER — 10/28/16 — SEAL

Colby Company engineering — A/E INFO

APPROVED (Signature) Daniel W. Greenfield — FOR COMMANDER NAVFAC

ACTIVITY: TIM FISHER, C. 2370.6 BRANCH HEAD

SATISFACTORY TO: DATE 10/28/2016

DES JMB | DRW JMB | CHK MRL

PM/DM: PETER STOCKLESS

BRANCH MANAGER: IAN BODWELL

FEAD/PM&E: AMIN BAHROUR

FIRE PROTECTION: PATRICK BAKAJ

DEPARTMENT OF THE NAVY — NAVAL FACILITIES ENGINEERING COMMAND — PUBLIC WORKS DEPARTMENT - MAINE

NAVAL FACILITIES ENGINEERING COMMAND ~ MID-ATLANTIC — NAVAL SHIPYARD - PORTSMOUTH, NH

PORTSMOUTH NAVAL SHIPYARD — KITTERY, ME

DRY DOCK #1 DEFUELING COMPLEX DRE-7

ELECTRICAL LEGEND, ABBREVIATIONS AND GENERAL NOTES

EPROJECT NO.: 1363311

CONSTR. CONTR. NO.: N40085-17-C-5002

NAVFAC DRAWING NO.: 12735070

SHEET 99 OF 117

E-001 | DD1-16-1151

DRAWFORM REVISION: 10 OCTOBER 2014

10/28/2016 7:09:42 AM X:\297 PORTSMOUTH NAVAL SHIPYARD\297.005.001 - DDH1 DEFUELING COMPLEX DESIGN\DRAWINGS\DRE7\SHEETS\E-001.DWG

CIRCUIT SCHEDULE

1. M140-3 PANEL 3 #25,27,29 [1]
2. DRE-7 PANEL 1 #2,4,6
3. DRE-7 PANEL 1 #7,9,11
4. DRE-7 PANEL 1 #8,10,12
5. DRE-7 PANEL 2 #2
6. DRE-7 PANEL 2 #1
7. DRE-7 PANEL 2 #3
8. NOT USED.
9. DRE-7 PANEL 2 #5
10. DRE-7 PANEL 2 #13
11. DRE-7 PANEL 2 #14
12. DRE-7 PANEL 2 #16
13. M140-3 PANEL 0 13,15,17 [1]
14. DRE-7 PANEL 2 #18

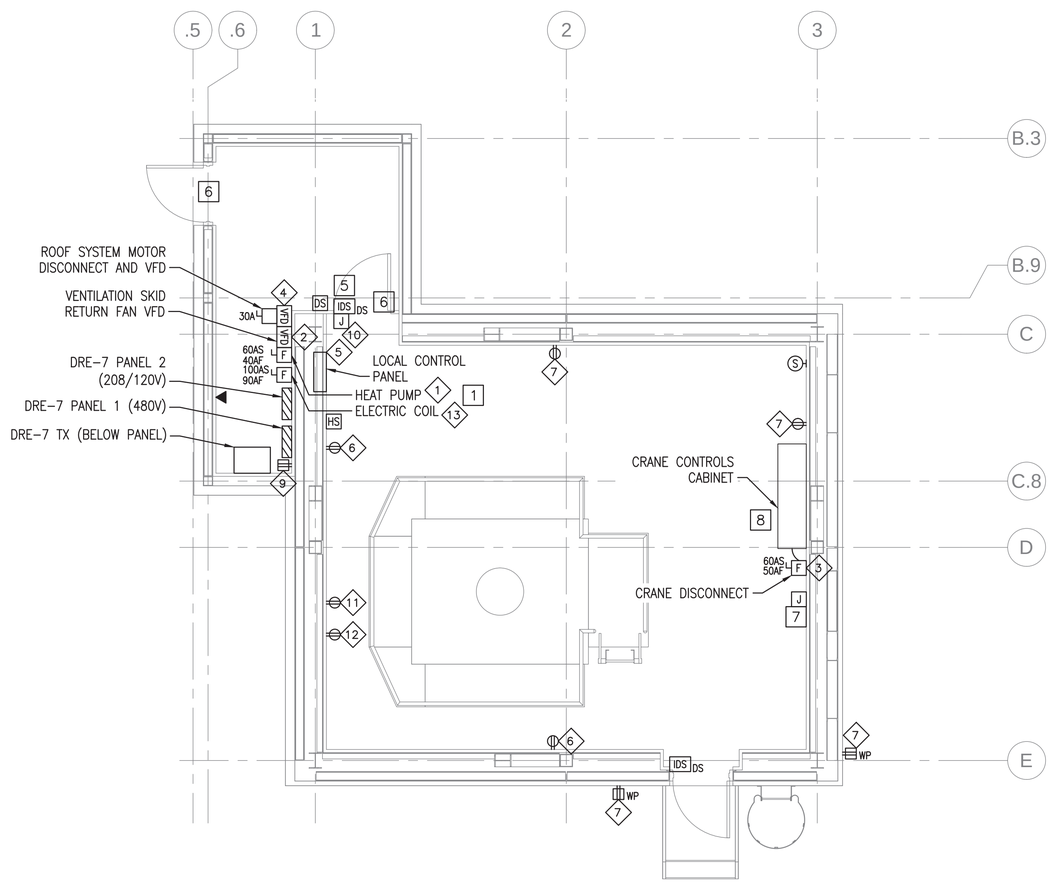

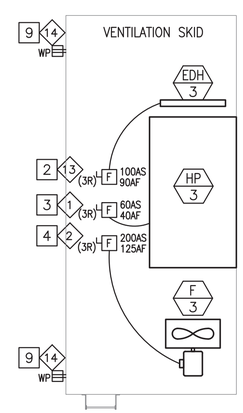

GROUND LEVEL POWER AND SYSTEMS PLAN (NO STORAGE ANNEX)

SCALE: 1/4" = 1'-0"

PLAN NORTH

0 2' 4' 8'
Scale: 1/4" = 1'-0"

NOTES

1. SEE SHEET E-001 FOR LEGEND, ABBREVIATIONS AND GENERAL NOTES.
2. SEE MECHANICAL SHEETS FOR EQUIPMENT DETAILS AND EXACT LOCATIONS.
3. GFCI CONVENIENCE RECEPTACLES SHALL BE FEED THRU TYPE WITH SINGLE GFCI AT START OF CIRCUIT FEEDING NON-GFCI TYPE RECEPTACLES.

KEYED NOTES

1. HEATING & COOLING UNITS ON VENTILATION SKID POWERED THROUGH M140 ENCLOSURE. COORDINATE WITH M140 DESIGN DOCUMENTS.
2. ELECTRIC HEATING COIL DISCONNECT. FURNISHED WITH SKID.
3. HEAT PUMP DISCONNECT. FURNISHED WITH SKID.
4. RETURN FAN DISCONNECT. FURNISHED WITH SKID.
5. PROVIDE AND INSTALL DOOR SWITCH AND INSTALL MAGNETIC DOOR LOCK. WIRE ALL CONTROL SIGNALS TO ACE-3. PROVIDE REQUIRED POWER SUPPLIES AND COORDINATE INSTALLATION WITH MANUFACTURER'S INSTRUCTIONS.
6. PROVIDE (3) 2" CONDUIT SLEEVES THROUGH WALL INTO PASSAGEWAY AT 90" AFF FOR SECURITY WIRING.
7. PROVIDE CONDUIT AND JUNCTION BOX FOR CRANE OPERATOR CONTROLS PENDANT RECEPTACLE. COORDINATE WITH CRANE CONTRACTOR FOR INSTALLATION REQUIREMENTS.
8. COORDINATE LOCATION OF EQUIPMENT ON EAST WALL WITH MECHANICAL DUCTWORK PENETRATIONS. SEE MECHANICAL SHEET M-100.
9. SKID MOUNTED CONVENIENCE RECEPTACLE. FURNISHED WITH SKID. PROVIDE 120V CIRCUIT AS INDICATED.

SYM	DESCRIPTION	DATE	APPR
0	ISSUED FOR CONSTRUCTION	10/28/2016	CBC

NAVFAC

STATE OF MAINE
JASON M. BEAULIEU
No. 13441
LICENSED
PROFESSIONAL ENGINEER
10/28/16
SEAL

Colby Company engineering
A/E INFO

APPROVED
Daniel W. Greenfield
FOR COMMANDER NAVFAC

ACTIVITY
TIM FISHER
C. 2370.6 BRANCH HEAD

SATISFACTORY TO DATE 10/28/2016

DES	JMB	DRW	JMB	CHK	MRL

PM/DM: PETER STOCKLESS
BRANCH MANAGER: IAN BODWELL
FEA/PM&E: AMIN BAHROUR
FIRE PROTECTION: PATRICK BAKAJ

DEPARTMENT OF THE NAVY
NAVAL FACILITIES ENGINEERING COMMAND
PUBLIC WORKS DEPARTMENT - MAINE
NAVAL FACILITIES ENGINEERING COMMAND – MID-ATLANTIC
NAVAL SHIPYARD - PORTSMOUTH, NH
PORTSMOUTH NAVAL SHIPYARD
KITTERY, ME
DRY DOCK #1 DEFUELING COMPLEX
DRE-7
GROUND LEVEL POWER AND SYSTEMS PLAN (NO STORAGE ANNEX)

EPROJECT NO.: 1363311
CONSTR. CONTR. NO.: N40085-17-C-5002
NAVFAC DRAWING NO.: 12735071
SHEET 100 OF 117

EP-100 | DD1-16-1152

DRAWFORM REVISION: 10 OCTOBER 2014

10/28/2016 7:09:46 AM X:\297 PORTSMOUTH NAVAL SHIPYARD\297.005.001 - DD#1 DEFUELING COMPLEX DESIGN\DRAWINGS\DRE7\SHEETS\EP-100.DWG

CIRCUIT SCHEDULE

1. M140-3 PANEL 3 #25,27,29 [1]
2. DRE-7 PANEL 1 #2,4,6
3. DRE-7 PANEL 1 #7,9,11
4. DRE-7 PANEL 1 #8,10,12
5. DRE-7 PANEL 2 #2
6. DRE-7 PANEL 2 #1
7. DRE-7 PANEL 2 #3
8. DRE-7 PANEL 1 #14,16,18
9. DRE-7 PANEL 2 #5
10. DRE-7 PANEL 2 #13
11. DRE-7 PANEL 2 #14
12. DRE-7 PANEL 2 #16
13. M140-3 PANEL 0 13,15,17 [1]
14. DRE-7 PANEL 2 #18

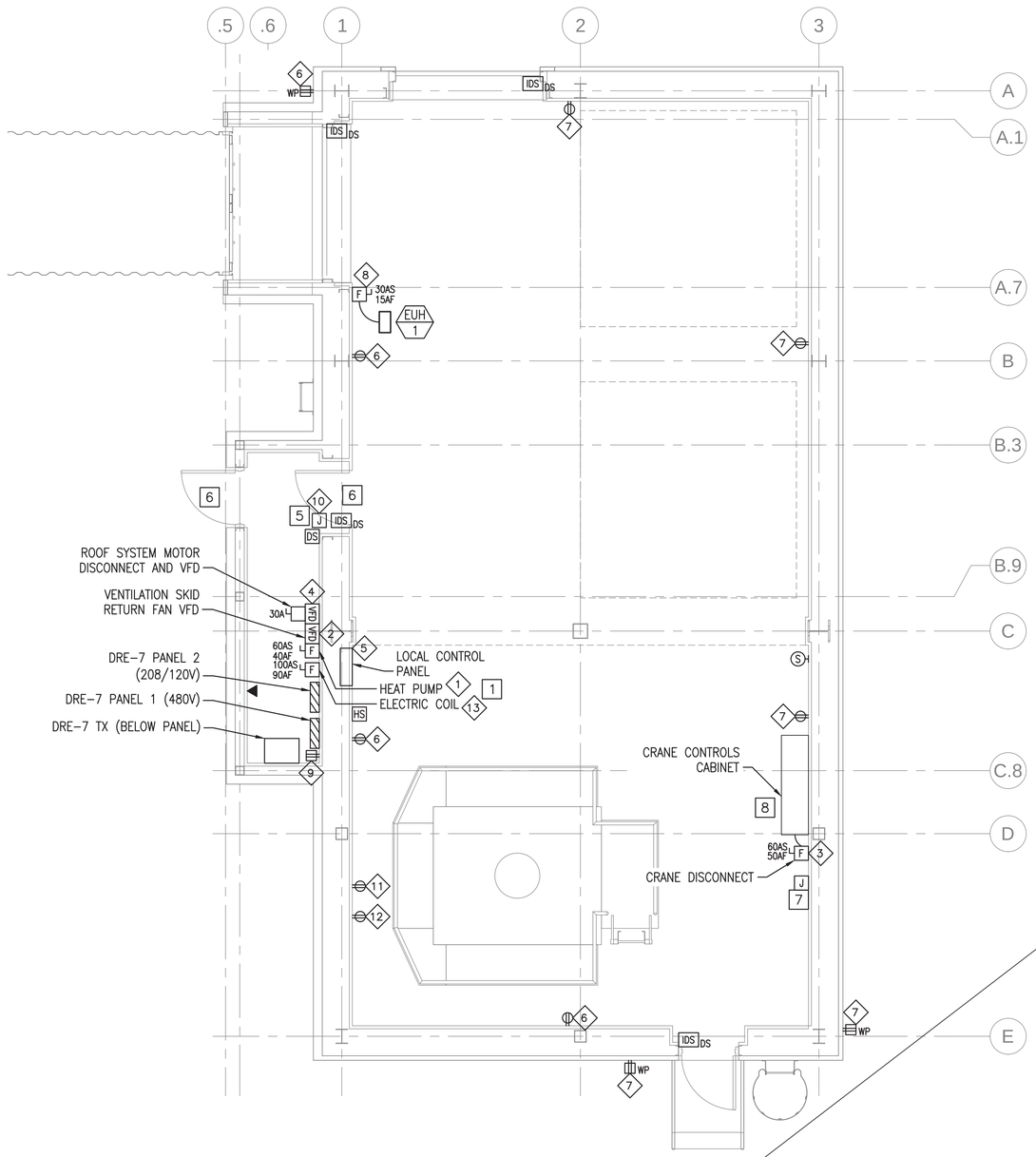

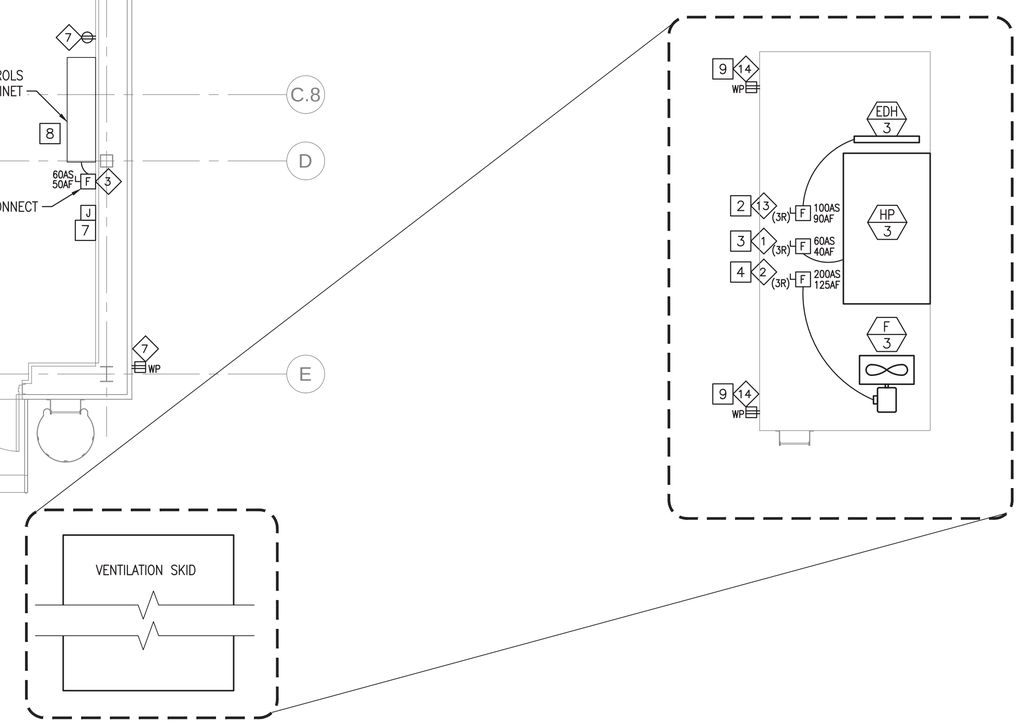

NOTES

1. SEE SHEET E-001 FOR LEGEND, ABBREVIATIONS AND GENERAL NOTES.
2. SEE MECHANICAL SHEETS FOR EQUIPMENT DETAILS AND EXACT LOCATIONS.
3. GFCI CONVENIENCE RECEPTACLES SHALL BE FEED THRU TYPE WITH SINGLE GFCI AT START OF CIRCUIT FEEDING NON-GFCI TYPE RECEPTACLES.

KEYED NOTES

1. HEATING & COOLING UNITS ON VENTILATION SKID POWERED THROUGH M140 ENCLOSURE. COORDINATE WITH M140 DESIGN DOCUMENTS.
2. ELECTRIC HEATING COIL DISCONNECT. FURNISHED WITH SKID.
3. HEAT PUMP DISCONNECT. FURNISHED WITH SKID.
4. RETURN FAN DISCONNECT. FURNISHED WITH SKID.
5. PROVIDE AND INSTALL DOOR SWITCH AND INSTALL MAGNETIC DOOR LOCK. WIRE ALL CONTROL SIGNALS TO ACE-3. PROVIDE REQUIRED POWER SUPPLIES AND COORDINATE INSTALLATION WITH MANUFACTURER'S INSTRUCTIONS.
6. PROVIDE (3) 2" CONDUIT SLEEVES THROUGH WALL INTO PASSAGEWAY AT 90" AFF FOR SECURITY WIRING.
7. PROVIDE CONDUIT AND JUNCTION BOX FOR CRANE OPERATOR CONTROLS PENDANT RECEPTACLE. COORDINATE WITH CRANE CONTRACTOR FOR INSTALLATION REQUIREMENTS.
8. COORDINATE LOCATION OF EQUIPMENT ON EAST WALL WITH MECHANICAL DUCTWORK PENETRATIONS. SEE MECHANICAL SHEET M-100.
9. SKID MOUNTED CONVENIENCE RECEPTACLE. FURNISHED WITH SKID. PROVIDE 120V CIRCUIT AS INDICATED.

GROUND LEVEL POWER AND SYSTEMS PLAN

SCALE: 1/4" = 1'-0"

PLAN NORTH

Scale: 1/4" = 1'-0"

SYM	DESCRIPTION	DATE	APPR
0	ISSUED FOR CONSTRUCTION	10/28/2016	CBC

NAVFAC

STATE OF MAINE JASON M. BEAULIEU No. 13441 LICENSED PROFESSIONAL ENGINEER 10/28/16 SEAL

Colby Company engineering

A/E INFO

APPROVED Daniel W. Greenfield FOR COMMANDER NAVFAC

ACTIVITY: TIM FISHER C. 2370.6 BRANCH HEAD

SATISFACTORY TO DATE 10/28/2016

DES JMB DRW JMB CHK MRL

PMDM: PETER STOCKLESS

BRANCH MANAGER: IAN BODWELL

FEAD/PM&E: AMIN BAHROUR

FIRE PROTECTION: PATRICK BAKAJ

DEPARTMENT OF THE NAVY
NAVAL FACILITIES ENGINEERING COMMAND
PUBLIC WORKS DEPARTMENT - MAINE

NAVAL FACILITIES ENGINEERING COMMAND ~ MID-ATLANTIC
NAVAL SHIPYARD - PORTSMOUTH, NH

PORTSMOUTH NAVAL SHIPYARD
KITTERY, ME

DRY DOCK #1 DEFUELING COMPLEX
DRE-7

GROUND LEVEL POWER AND SYSTEMS PLAN

EPROJECT NO.: 1363311

CONSTR. CONTR. NO. N40085-17-C-5002

NAVFAC DRAWING NO. 12735072

SHEET 101 OF 117

EP-100A | DD1-16-1153

DRAWFORM REVISION: 10 OCTOBER 2014

10/28/2016 7:09:51 AM X:\297 PORTSMOUTH NAVAL SHIPYARD\297.005.001 - DD#1 DEFUELING COMPLEX DESIGN\DRAWINGS\DRE7\SHEETS\EP-100A.DWG

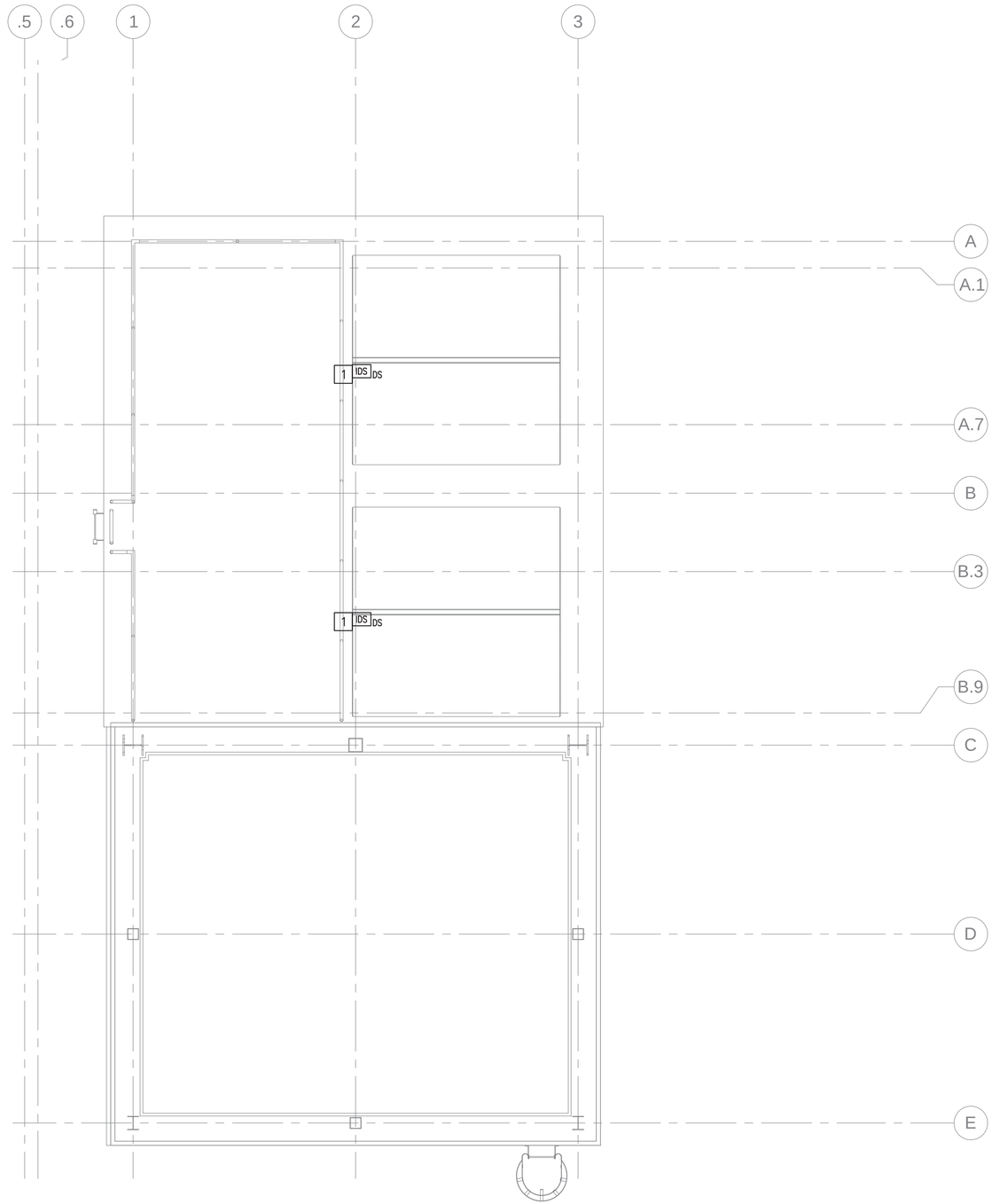

LOWER ROOF POWER AND SYSTEMS PLAN

SCALE: 1/4" = 1'-0"

PLAN NORTH

0 2' 4' 8'
Scale: 1/4" = 1'-0"

NOTES

1. SEE SHEET E-001 FOR LEGEND, ABBREVIATIONS AND GENERAL NOTES.

KEYED NOTES

1. INSTALL ON UNDERSIDE OF DOORS.

SYM	DESCRIPTION	DATE	APPR
0	ISSUED FOR CONSTRUCTION	10/28/2016	CBC

NAVFAC

STATE OF MAINE
JASON M. BEAULIEU
No. 13441
LICENSED
PROFESSIONAL ENGINEER
10/28/16
SEAL

Colby Company engineering
A/E INFO

APPROVED
Digitally signed
Daniel W. Greenfield
FOR COMMANDER NAVFAC

ACTIVITY
TIM FISHER
C. 2370.6 BRANCH HEAD

SATISFACTORY TO DATE 10/28/2016

DES	JMB	DRW	JMB	CHK	MRL

PM/DM PETER STOCKLESS
BRANCH MANAGER IAN BODWELL
FEAD/PM&E AMIN BAHROUR
FIRE PROTECTION PATRICK BAKAJ

DEPARTMENT OF THE NAVY
NAVAL FACILITIES ENGINEERING COMMAND
PUBLIC WORKS DEPARTMENT - MAINE
NAVAL FACILITIES ENGINEERING COMMAND ~ MID-ATLANTIC
NAVAL SHIPYARD - PORTSMOUTH, NH
PORTSMOUTH NAVAL SHIPYARD
KITTERY, ME
DRY DOCK #1 DEFUELING COMPLEX
DRE-7
LOWER ROOF POWER AND SYSTEMS PLAN

EPROJECT NO.: 1363311
CONSTR. CONTR. NO. N40085-17-C-5002
NAVFAC DRAWING NO. 12735073
SHEET 102 OF 117
EP-101 DD1-16-1154

DRAWFORM REVISION: 10 OCTOBER 2014

10/28/2016 7:09:54 AM X:\297 PORTSMOUTH NAVAL SHIPYARD\297.005.001 - DD#1 DEFUELING COMPLEX DESIGN\DRAWINGS\DRE7\SHEETS\EP-101.DWG

CIRCUIT SCHEDULE

1. DRE-7 PANEL 1 #8,10,12
2. DRE-7 PANEL 2 #7

NOTES

1. SEE SHEET E-001 FOR LEGEND, ABBREVIATIONS AND GENERAL NOTES.
2. SEE MECHANICAL SHEETS FOR EQUIPMENT DETAILS AND EXACT LOCATIONS.
3. DO NOT INSTALL EQUIPMENT OR CONDUIT EXPOSED ON UNDERSIDE OF ROOF STRUCTURE OR IN ANY LOCATION THAT WILL INTERFERE WITH ROOF OPERATION OR ENCROACH UPON CLEAR SPACE OF ROOF OPENING.

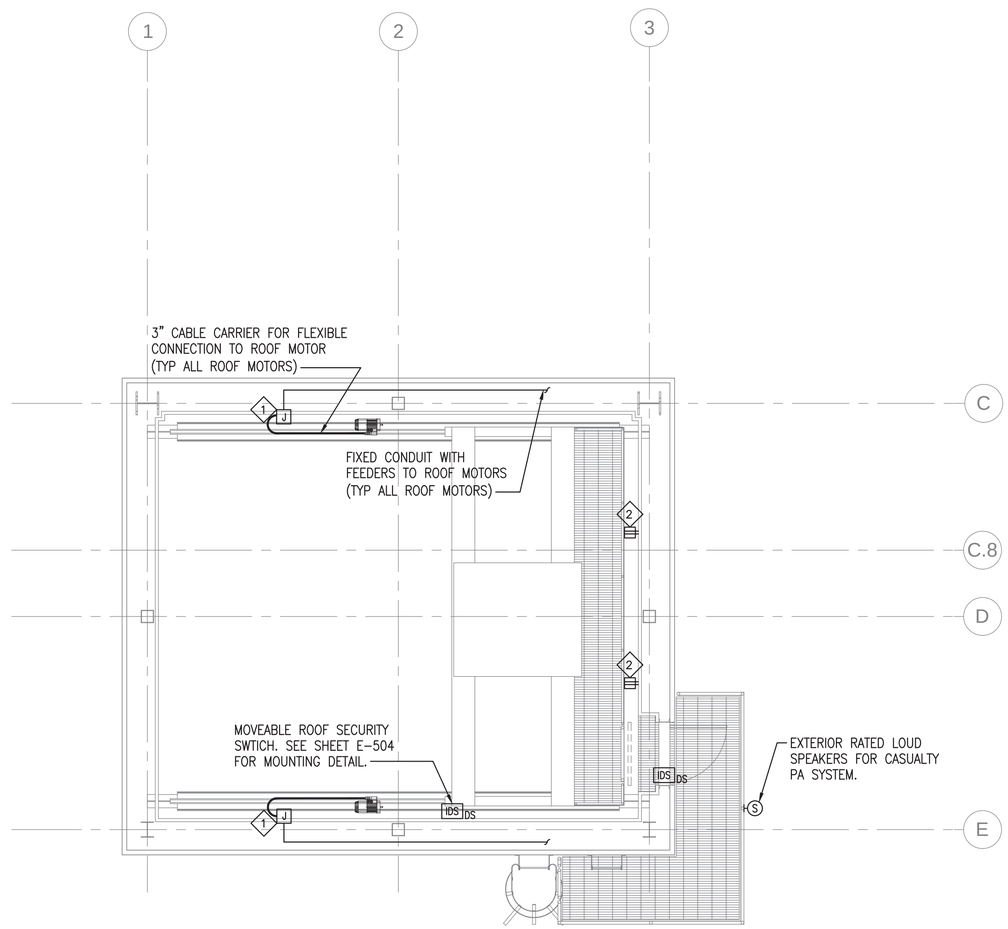

CRANE LEVEL POWER AND SYSTEMS PLAN

SCALE: 1/4" = 1'-0"

PLAN NORTH

0 2' 4' 8'
Scale: 1/4" = 1'-0"

SYM	DESCRIPTION	DATE	APPR
0	ISSUED FOR CONSTRUCTION	10/28/2016	CBC

NAVFAC

STATE OF MAINE
JASON M. BEAULIEU
No. 13441
LICENSED
PROFESSIONAL ENGINEER
10/28/16
SEAL

Colby Company engineering
A/E INFO

APPROVED
Digitally signed by Daniel W. Greenfield
FOR COMMANDER NAVFAC

ACTIVITY
TIM FISHER
C. 2370.6 BRANCH HEAD

SATISFACTORY TO DATE 10/28/2016

DES JMB | DRW JMB | CHK MRL

PMDM PETER STOCKLESS
BRANCH MANAGER IAN BODWELL
FEAD/PM&E AMIN BAHROUR
FIRE PROTECTION PATRICK BAKAJ

DEPARTMENT OF THE NAVY
NAVAL FACILITIES ENGINEERING COMMAND
PUBLIC WORKS DEPARTMENT - MAINE

NAVAL FACILITIES ENGINEERING COMMAND ~ MID-ATLANTIC
NAVAL SHIPYARD - PORTSMOUTH, NH

PORTSMOUTH NAVAL SHIPYARD
KITTERY, ME

DRY DOCK #1 DEFUELING COMPLEX
DRE-7

CRANE LEVEL POWER AND SYSTEMS PLAN

EPROJECT NO.: 1363311

CONSTR. CONTR. NO.
N40085-17-C-5002

NAVFAC DRAWING NO.
12735074

SHEET 103 OF 117

EP-102 | DD1-16-1155

DRAWFORM REVISION: 10 OCTOBER 2014

10/28/2016 7:09:59 AM X:\297 PORTSMOUTH NAVAL SHIPYARD\297.005.001 - DD#1 DEFUELING COMPLEX DESIGN\DRAWINGS\DRE7\SHEETS\EP-102.DWG

CIRCUIT SCHEDULE

1. DRE-7 PANEL 2 #9
2. DRE-7 PANEL 2 #11

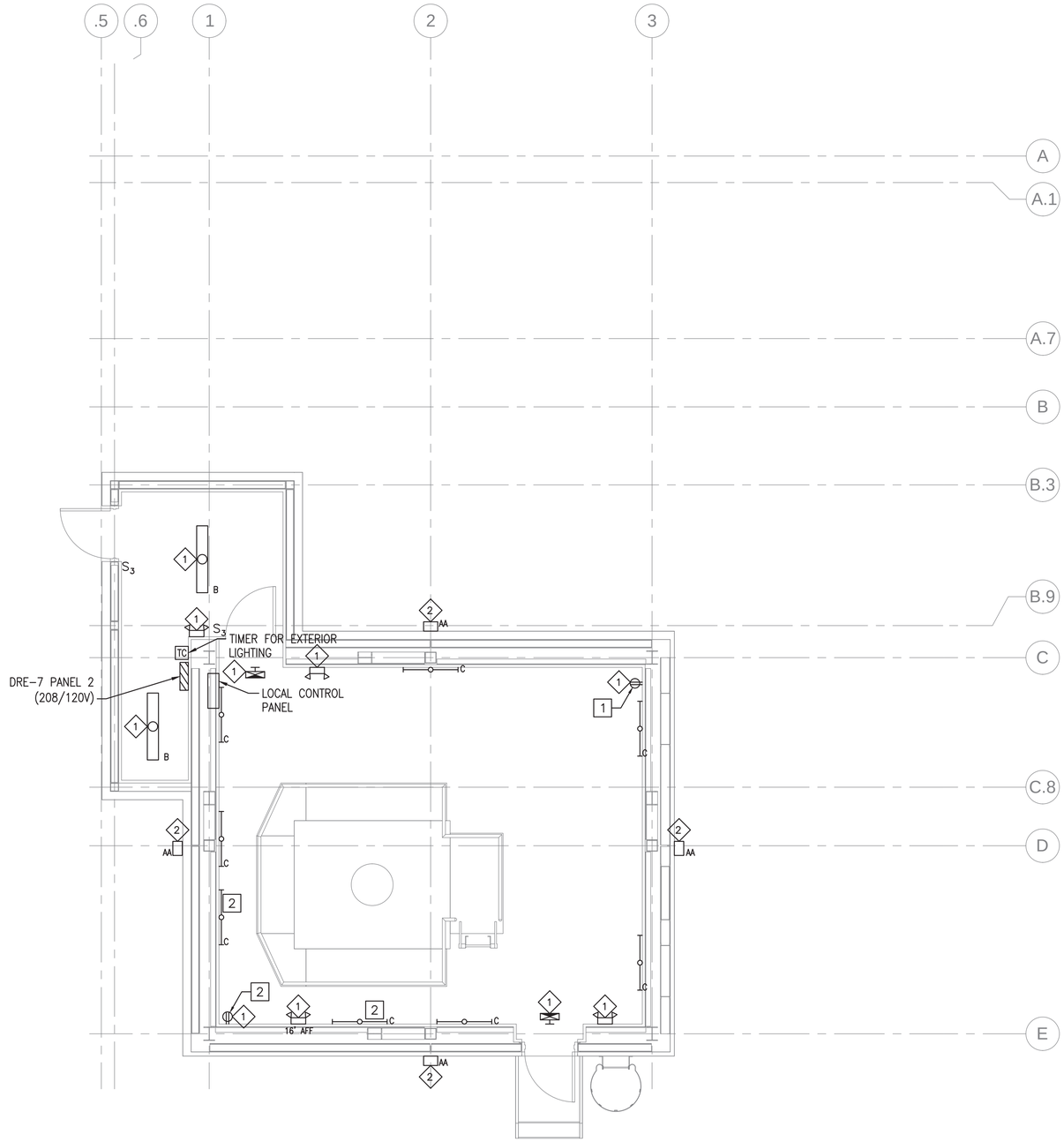

GROUND LEVEL LIGHTING PLAN (NO STORAGE ANNEX)

SCALE: 1/4" = 1'-0"

PLAN NORTH

0 2' 4' 8'
Scale: 1/4" = 1'-0"

NOTES

1. SEE SHEET E-001 FOR LEGEND, ABBREVIATIONS AND GENERAL NOTES.
2. SEE SHEET E-601 FOR LIGHT FIXTURE SCHEDULE.

KEYED NOTES

1. PROVIDE SWITCHED RECEPTACLE FOR CORDED PORTABLE WORK LIGHTING. MOUNT RECEPTACLE 7FT AFF. CONTROL RECEPTACLE THROUGH LOCAL CONTROL PANEL.
2. PROVIDE SWITCHED RECEPTACLE FOR CORDED PORTABLE WORK LIGHTING. MOUNT RECEPTACLE AND INDICATED LIGHT FIXTURES 17FT AFF. CONTROL RECEPTACLE THROUGH LOCAL CONTROL PANEL.

SYM	DESCRIPTION	DATE	APPR
0	ISSUED FOR CONSTRUCTION	10/28/2016	CBC

NAVFAC

STATE OF MAINE
JASON M. BEAULIEU
No. 13441
LICENSED PROFESSIONAL ENGINEER
10/28/16
SEAL

Colby Company engineering
A/E INFO

APPROVED
Digitally signed
Daniel W. Greenfield
FOR COMMANDER NAVFAC

ACTIVITY
TIM FISHER
C. 2370.6 BRANCH HEAD

SATISFACTORY TO DATE 10/28/2016
DES JMB DRW JMB CHK MRL
PMDM PETER STOCKLESS
BRANCH MANAGER IAN BODWELL
FEA/PM&E AMIN BAHROUR
FIRE PROTECTION PATRICK BAKAJ

DEPARTMENT OF THE NAVY
NAVAL FACILITIES ENGINEERING COMMAND
PUBLIC WORKS DEPARTMENT - MAINE

NAVAL FACILITIES ENGINEERING COMMAND ~ MID-ATLANTIC
NAVAL SHIPYARD, PORTSMOUTH, NH

PORTSMOUTH NAVAL SHIPYARD
KITTERY, ME

DRY DOCK #1 DEFUELING COMPLEX
DRE-7

GROUND LEVEL LIGHTING PLAN (NO STORAGE ANNEX)

EPROJECT NO.: 1363311
CONSTR. CONTR. NO. N40085-17-C-5002
NAVFAC DRAWING NO. 12735075
SHEET 104 OF 117
EL-100 DD1-16-1156

DRAWFORM REVISION: 10 OCTOBER 2014

10/28/2016 7:10:03 AM X:\297 PORTSMOUTH NAVAL SHIPYARD\297.005.001 - DD#1 DEFUELING COMPLEX DESIGN\DRAWINGS\DRE7\SHEETS\EL-100.DWG

CIRCUIT SCHEDULE

1. DRE-7 PANEL 2 #9
2. DRE-7 PANEL 2 #11

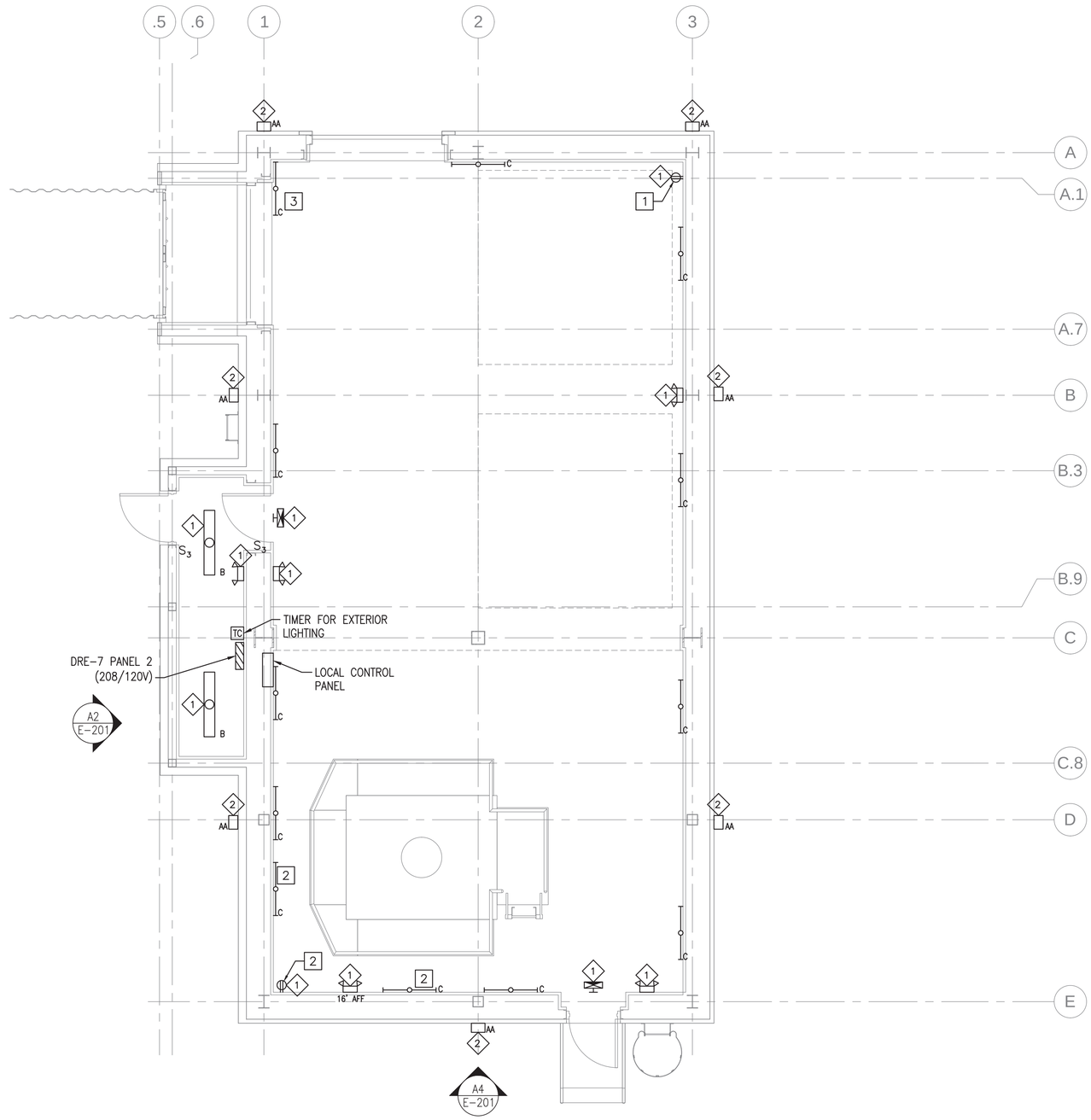

GROUND LEVEL LIGHTING PLAN

SCALE: 1/4" = 1'-0"

PLAN NORTH

NOTES

1. SEE SHEET E-001 FOR LEGEND, ABBREVIATIONS AND GENERAL NOTES.
2. SEE SHEET E-601 FOR LIGHT FIXTURE SCHEDULE.

KEYED NOTES

1. PROVIDE SWITCHED RECEPTACLE FOR CORDED PORTABLE WORK LIGHTING. MOUNT RECEPTACLE 7FT AFF. CONTROL RECEPTACLE THROUGH LOCAL CONTROL PANEL.
2. PROVIDE SWITCHED RECEPTACLE FOR CORDED PORTABLE WORK LIGHTING. MOUNT RECEPTACLE AND INDICATED LIGHT FIXTURES 17FT AFF. CONTROL RECEPTACLE THROUGH LOCAL CONTROL PANEL.
3. MOUNT LIGHT FIXTURE ABOVE OVERHEAD DOORS.

Scale: 1/4" = 1'-0"

SYM	DESCRIPTION	DATE	APPR
0	ISSUED FOR CONSTRUCTION	10/28/2016	CBC

NAVFAC

STATE OF MAINE
JASON M. BEAULIEU
No. 13441
LICENSED
PROFESSIONAL ENGINEER
10/28/16
SEAL

Colby Company engineering
A/E INFO

APPROVED (Signature)
FOR COMMANDER NAVFAC

ACTIVITY: TIM FISHER
C. 2370.6 BRANCH HEAD

SATISFACTORY TO DATE 10/28/2016

DES	DRW	CHK
JMB	JMB	MRL

PMDM: PETER STOCKLESS
BRANCH MANAGER: IAN BODWELL
FEAD/PM&E: AMIN BAHROUR
FIRE PROTECTION: PATRICK BAKAJ

DEPARTMENT OF THE NAVY
NAVAL FACILITIES ENGINEERING COMMAND
PUBLIC WORKS DEPARTMENT - MAINE
NAVAL FACILITIES ENGINEERING COMMAND ~ MID-ATLANTIC
NAVAL SHIPYARD - PORTSMOUTH, NH
PORTSMOUTH NAVAL SHIPYARD
KITTERY, ME
DRY DOCK #1 DEFUELING COMPLEX
DRE-7
GROUND LEVEL LIGHTING PLAN

EPROJECT NO.: 1363311
CONSTR. CONTR. NO.: N40085-17-C-5002
NAVFAC DRAWING NO.: 12735076
SHEET 105 OF 117

EL-100A | DD1-16-1157

DRAWFORM REVISION: 10 OCTOBER 2014

10/28/2016 7:10:07 AM X:\297 PORTSMOUTH NAVAL SHIPYARD\297.005.001 - DD#1 DEFUELING COMPLEX DESIGN\DRAWINGS\DRE7\SHEETS\EL-100A.DWG

CIRCUIT SCHEDULE

1 DRE-7 PANEL 2 #11

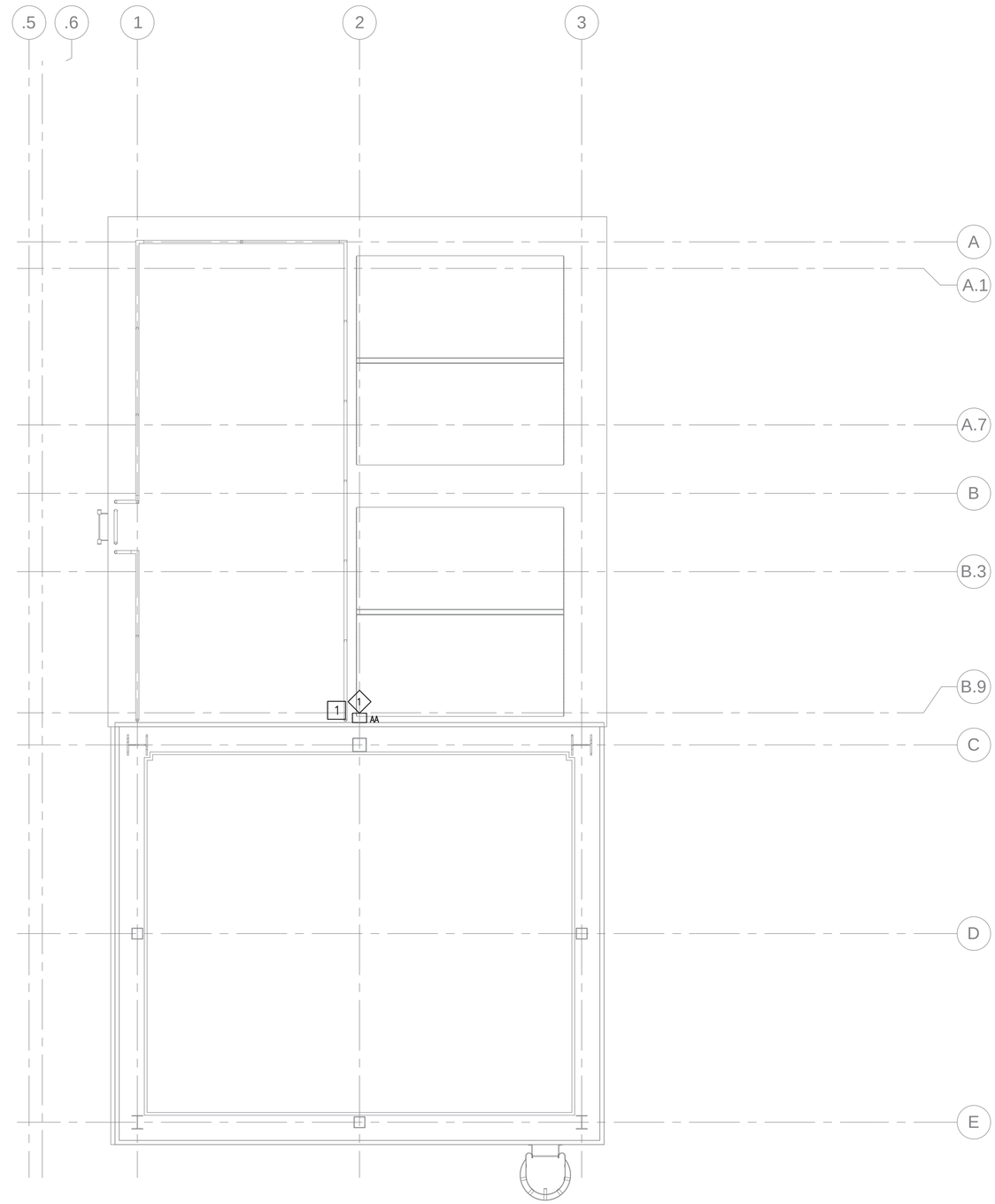

LOWER ROOF LIGHTING PLAN

SCALE: 1/4" = 1'-0"

PLAN NORTH

0 2' 4' 8'
Scale: 1/4" = 1'-0"

NOTES

1. SEE SHEET E-001 FOR LEGEND, ABBREVIATIONS AND GENERAL NOTES.
2. SEE SHEET E-601 FOR LIGHT FIXTURE SCHEDULE.

KEYED NOTES

1 MOUNT FIXTURE 12FT ABOVE ROOF LEVEL. SEE SHEET E-201 FOR ELEVATIONS.

SYM	DESCRIPTION	DATE	APPR
0	ISSUED FOR CONSTRUCTION	10/28/2016	CBC

NAVFAC

STATE OF MAINE
JASON M. BEAULIEU
No. 13441
LICENSED
PROFESSIONAL ENGINEER
10/28/16
SEAL

Colby Company engineering
A/E INFO

APPROVED
Daniel W. Greenfield
FOR COMMANDER NAVFAC

ACTIVITY
TIM FISHER
C. 2370.6 BRANCH HEAD

SATISFACTORY TO DATE 10/28/2016

DES JMB | DRW JMB | CHK MRL

PM/DM PETER STOCKLESS
BRANCH MANAGER IAN BODWELL
FEAD/PM&E AMIN BAHROUR
FIRE PROTECTION PATRICK BAKAJ

DEPARTMENT OF THE NAVY
NAVAL FACILITIES ENGINEERING COMMAND
PUBLIC WORKS DEPARTMENT - MAINE

NAVAL FACILITIES ENGINEERING COMMAND ~ MID-ATLANTIC
NAVAL SHIPYARD - PORTSMOUTH, NH

PORTSMOUTH NAVAL SHIPYARD
DRY DOCK #1 DEFUELING COMPLEX
DRE-7
KITTERY, ME

LOWER ROOF LIGHTING PLAN

EPROJECT NO.: 1363311

CONSTR. CONTR. NO.
N40085-17-C-5002

NAVFAC DRAWING NO.
12735077

SHEET 106 OF 117

EL-101 | DD1-16-1158

DRAWFORM REVISION: 10 OCTOBER 2014

10/28/2016 7:10:11 AM X:\297 PORTSMOUTH NAVAL SHIPYARD\297.005.001 - DD#1 DEFUELING COMPLEX DESIGN\DRAWINGS\DRE7\SHEETS\EL-101.DWG

CIRCUIT SCHEDULE

1. DRE-7 PANEL 2 #9
2. DRE-7 PANEL 2 #11

NOTES

1. SEE SHEET E-001 FOR LEGEND, ABBREVIATIONS AND GENERAL NOTES.
2. SEE SHEET E-601 FOR LIGHT FIXTURE SCHEDULE.

KEYED NOTES

1. PROVIDE SWITCHED RECEPTACLE FOR CORDED PORTABLE WORK LIGHTING. MOUNT RECEPTACLE 7FT AFF. WIRE FOR 3-WAY CONTROL BETWEEN SWITCH AND LOCAL CONTROL PANEL ON GROUND FLOOR.
2. MOUNT LIGHT FIXTURE AT ELEVATION 53'-6". SEE SHEET E-201 FOR ELEVATION VIEW.
3. MOUNT LIGHT FIXTURE AT ELEVATION 40'-0". SEE SHEET E-201 FOR ELEVATION VIEW.

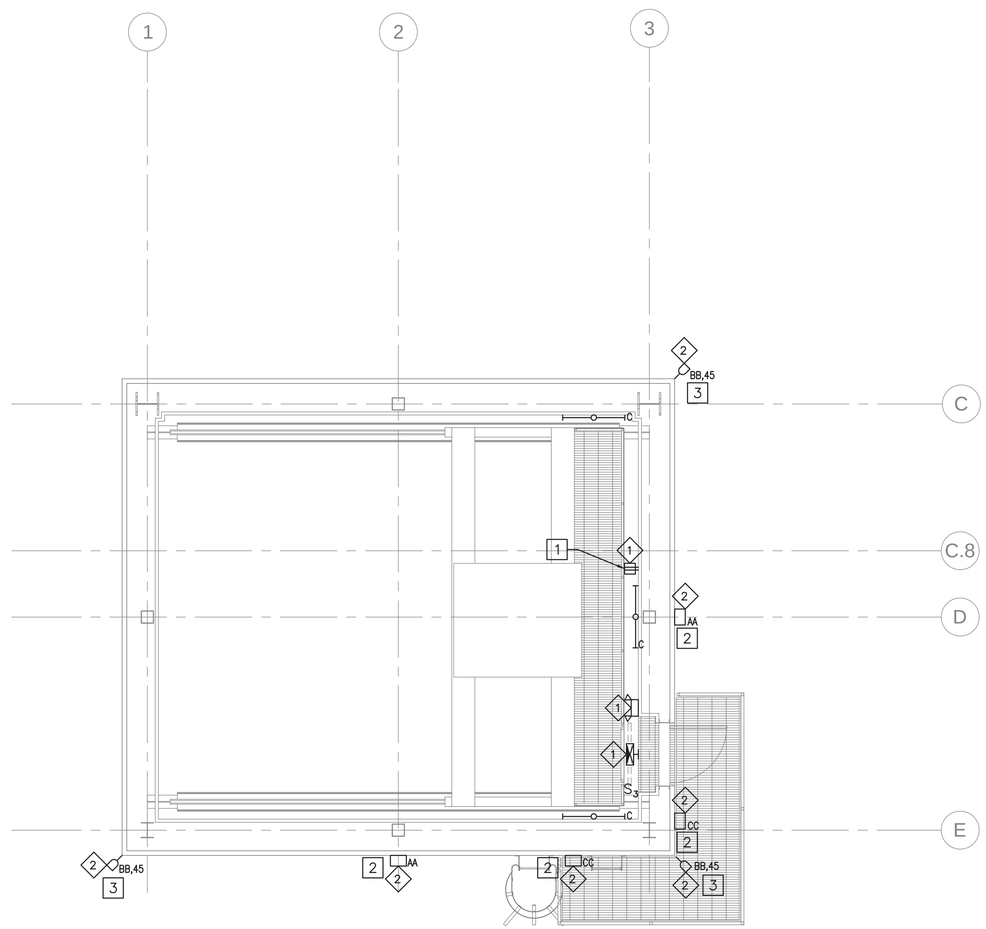

CRANE LEVEL LIGHTING PLAN

SCALE: 1/4" = 1'-0"

PLAN NORTH

0 2' 4' 8'
Scale: 1/4" = 1'-0"

SYM	DESCRIPTION	DATE	APPR
0	ISSUED FOR CONSTRUCTION	10/28/2016	CBC

NAVFAC

STATE OF MAINE
JASON M. BEAULIEU
No. 13441
LICENSED
PROFESSIONAL ENGINEER
10/28/16
SEAL

Colby Company engineering
A/E INFO

APPROVED
Daniel W. Greenfield
FOR COMMANDER NAVFAC

ACTIVITY
TIM FISHER
C. 2370.6 BRANCH HEAD

SATISFACTORY TO DATE 10/28/2016

DES JMB | DRW JMB | CHK MRL

PM/DM PETER STOCKLESS
BRANCH MANAGER IAN BODWELL
FEAD/PM&E AMIN BAHROUR
FIRE PROTECTION PATRICK BAKAJ

DEPARTMENT OF THE NAVY
NAVAL FACILITIES ENGINEERING COMMAND
PUBLIC WORKS DEPARTMENT - MAINE

NAVAL FACILITIES ENGINEERING COMMAND ~ MID-ATLANTIC
NAVAL SHIPYARD - PORTSMOUTH NH

PORTSMOUTH NAVAL SHIPYARD
KITTERY, ME

DRY DOCK #1 DEFUELING COMPLEX
DRE-7

CRANE LEVEL LIGHTING PLAN

EPROJECT NO.: 1363311

CONSTR. CONTR. NO.
N40085-17-C-5002

NAVFAC DRAWING NO.
12735078

SHEET 107 OF 117

EL-102 | DD1-16-1159

DRAWFORM REVISION: 10 OCTOBER 2014

10/28/2016 7:10:15 AM X:\297 PORTSMOUTH NAVAL SHIPYARD\297.005.001 - DD#1 DEFUELING COMPLEX DESIGN\DRAWINGS\DRE7\SHEETS\EL-102.DWG

NOTES

1. SEE SHEET E-001 FOR LEGEND, ABBREVIATIONS AND GENERAL NOTES.

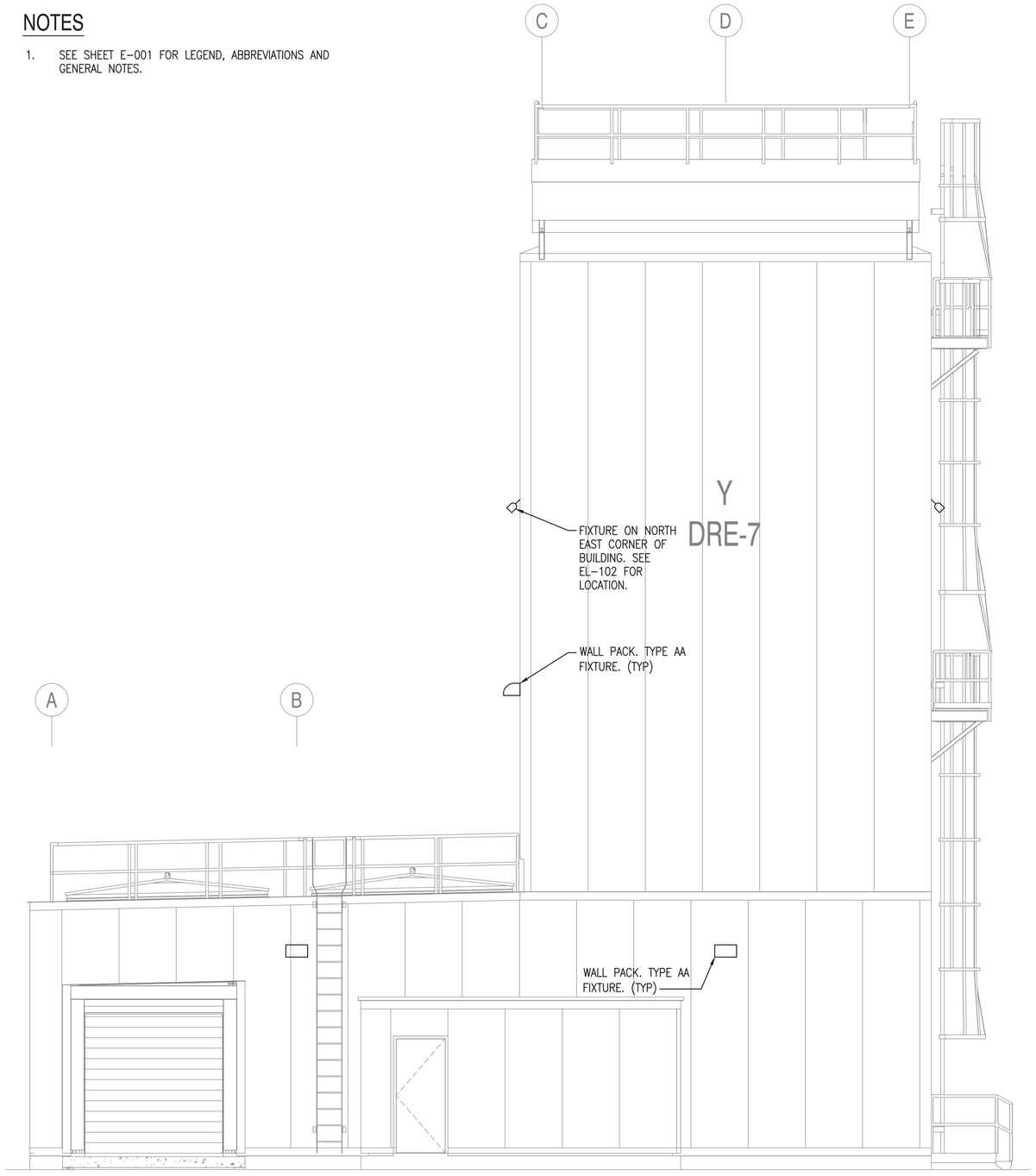

ELECTRICAL WEST EXTERIOR (A2)
SCALE: 1/4"=1'-0" EL-100A

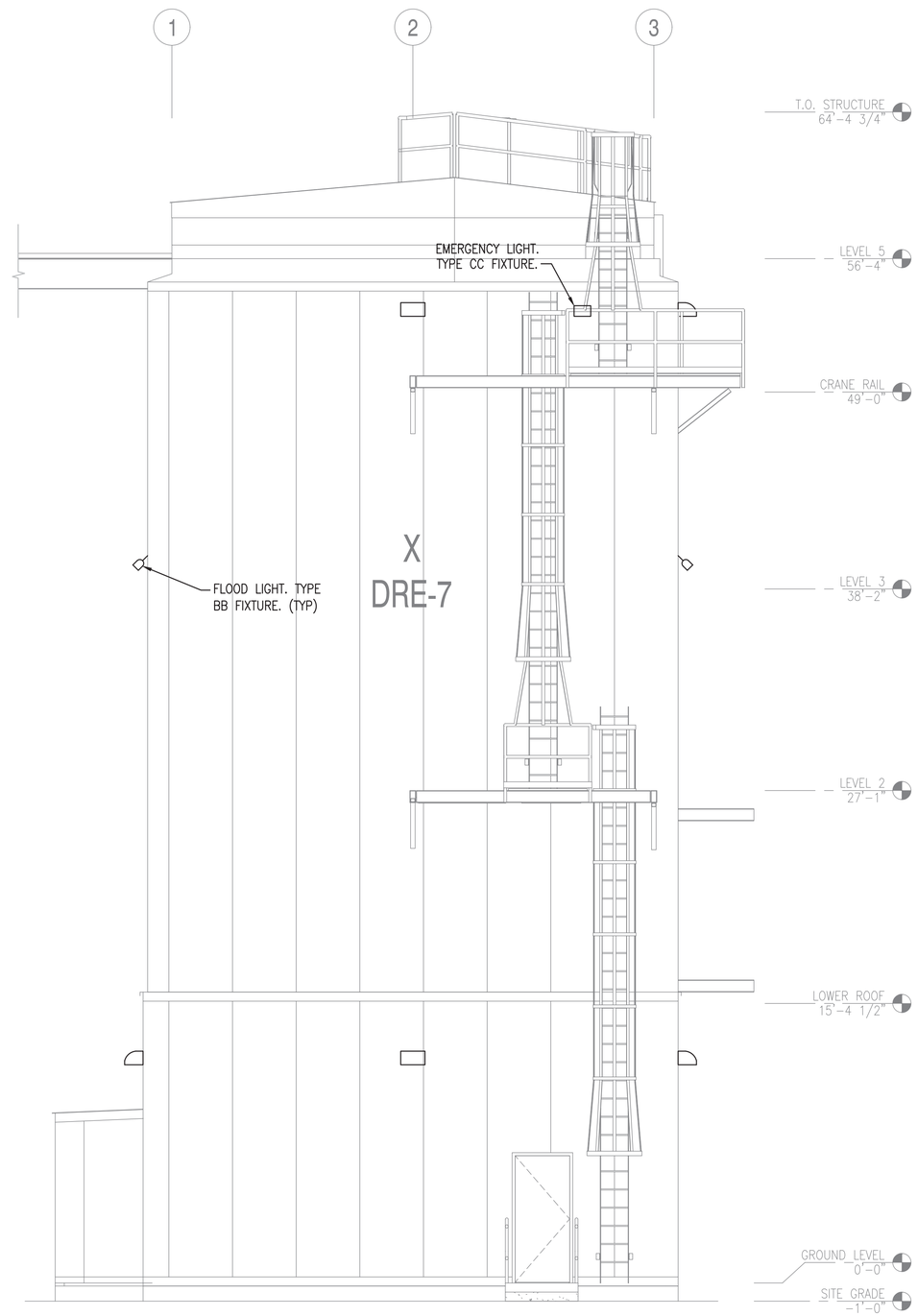

ELECTRICAL SOUTH EXTERIOR (A4)
SCALE: 1/4"=1'-0" EL-100A

0 2' 4' 8'
Scale: 1/4" = 1'-0"

SYM	DESCRIPTION	DATE	APPR
0	ISSUED FOR CONSTRUCTION	10/28/2016	CBC

NAVFAC

STATE OF MAINE
JASON M. BEAULIEU
No. 13441
LICENSED PROFESSIONAL ENGINEER
10/28/16
SEAL

Colby Company engineering
A/E INFO

APPROVED
Digitally signed by Daniel W. Greenfield
FOR COMMANDER NAVFAC

ACTIVITY
TIM FISHER
C. 2370.6 BRANCH HEAD

SATISFACTORY TO DATE 10/28/2016

DES	GJN	DRW GJN	CHK DMD

PM/DM	PETER STOCKLESS
BRANCH MANAGER	IAN BODWELL
FEA/DP/M&E	AMIN BAHROUR
FIRE PROTECTION	PATRICK BAKAJ

DEPARTMENT OF THE NAVY
NAVAL FACILITIES ENGINEERING COMMAND
PUBLIC WORKS DEPARTMENT - MAINE
NAVAL FACILITIES ENGINEERING COMMAND ~ MID-ATLANTIC
NAVAL SHIPYARD - PORTSMOUTH, NH
PORTSMOUTH NAVAL SHIPYARD
KITTERY, ME
DRY DOCK #1 DEFUELING COMPLEX
DRE-7
ELECTRICAL LIGHTING ELEVATIONS

EPROJECT NO.: 1363311
CONSTR. CONTR. NO.: N40085-17-C-5002
NAVFAC DRAWING NO. 12735079
SHEET 108 OF 117

E-201 | DD1-16-1160

DRAWFORM REVISION: 10 OCTOBER 2014

10/28/2016 7:10:19 AM X:\297 PORTSMOUTH NAVAL SHIPYARD\297.005.001 - DDH1 DEFUELING COMPLEX DESIGN\DRAWINGS\DRE7\SHEETS\E-201.DWG

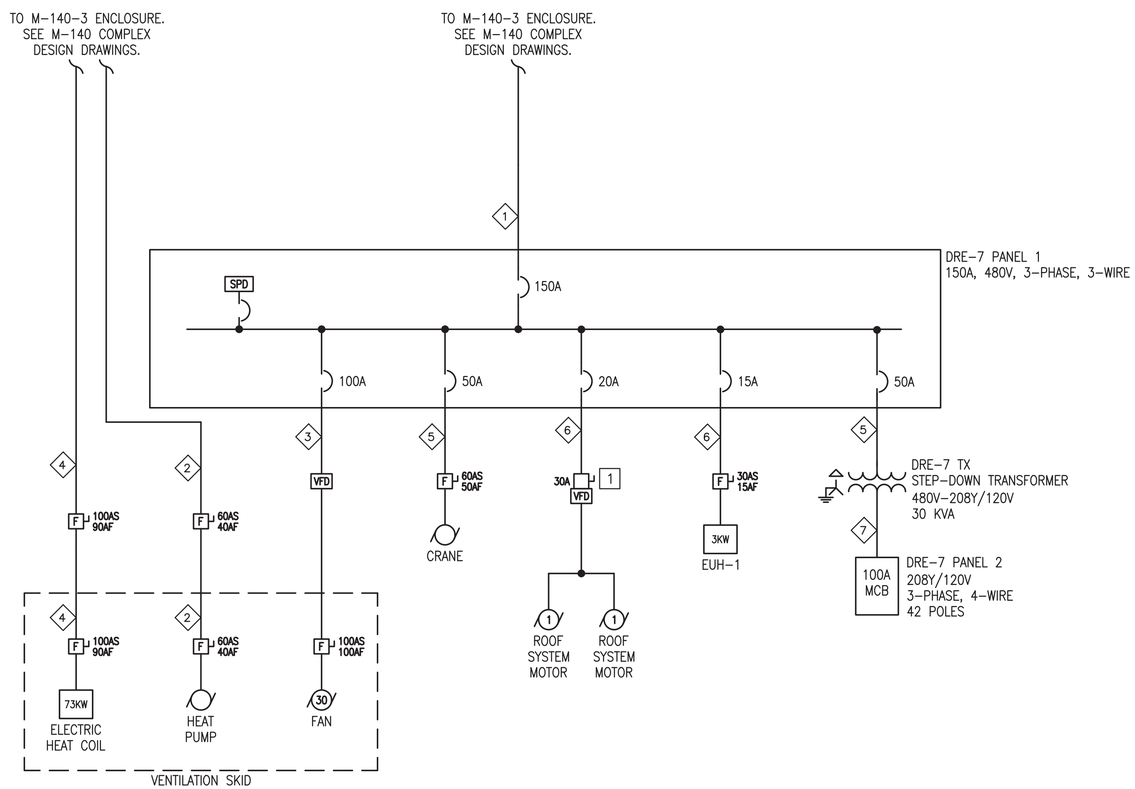

ONE-LINE DIAGRAM (A1)

SCALE: NTS

NOTES

1. SEE SHEET E-001 FOR LEGEND, ABBREVIATIONS AND GENERAL NOTES.

KEYED NOTES

1. PROVIDE LOCKABLE DISCONNECT SWITCH FOR ROOF MOTOR SYSTEM. SEE SHEET EP-100/EP-100A FOR LOCATION.

CABLE SCHEDULE

1. (3) #2/0 AWG, (1) #6 GND, IN 2" C
2. (3) #8 AWG, (1) #10 GND, IN 3/4" C
3. (3) #3 AWG, (1) #8 GND, IN 1" C
4. (3) #4 AWG, (1) #8 GND, IN 1" C
5. (3) #8 AWG, (1) #10 GND, IN 3/4" C
6. (3) #12 AWG, (1) #12 GND, IN 3/4" C
7. (4) #2 AWG, (1) #8 GND, IN 1-1/2" C

SYM	DESCRIPTION	DATE	APPR
0	ISSUED FOR CONSTRUCTION	10/28/2016	CBC

NAVFAC

STATE OF MAINE
JASON M. BEAULIEU
No. 13441
LICENSED
PROFESSIONAL ENGINEER
10/28/16
SEAL

Colby Company engineering
A/E INFO

APPROVED
Date Generated
Daniel W. Greenfield
FOR COMMANDER NAVFAC

ACTIVITY
TIM FISHER
C. 2370.6 BRANCH HEAD

SATISFACTORY TO DATE 10/28/2016

DES	JMB	DRW	JMB	CHK	MRL

PMDM: PETER STOCKLESS
BRANCH MANAGER: IAN BODWELL
FEAD/PM&E: AMIN BAHROUR
FIRE PROTECTION: PATRICK BAKAJ

DEPARTMENT OF THE NAVY
NAVAL FACILITIES ENGINEERING COMMAND
PUBLIC WORKS DEPARTMENT - MAINE
NAVAL FACILITIES ENGINEERING COMMAND ~ MID-ATLANTIC
NAVAL SHIPYARD - PORTSMOUTH, NH
PORTSMOUTH NAVAL SHIPYARD
KITTERY, ME
DRY DOCK #1 DEFUELING COMPLEX
DRE-7
ELECTRICAL ONE-LINE DIAGRAM

EPROJECT NO.: 1363311
CONSTR. CONTR. NO. N40085-17-C-5002
NAVFAC DRAWING NO. 12735080
SHEET 109 OF 117
E-501 | DD1-16-1161

DRAWFORM REVISION: 10 OCTOBER 2014

10/28/2016 7:10:23 AM X:\297 PORTSMOUTH NAVAL SHIPYARD\297.005.001 - DD#1 DEFUELING COMPLEX DESIGN\DRAWINGS\DRE7\SHEETS\E-501.DWG

NOTES

1. SEE SHEET E-001 FOR LEGEND, ABBREVIATIONS AND GENERAL NOTES.

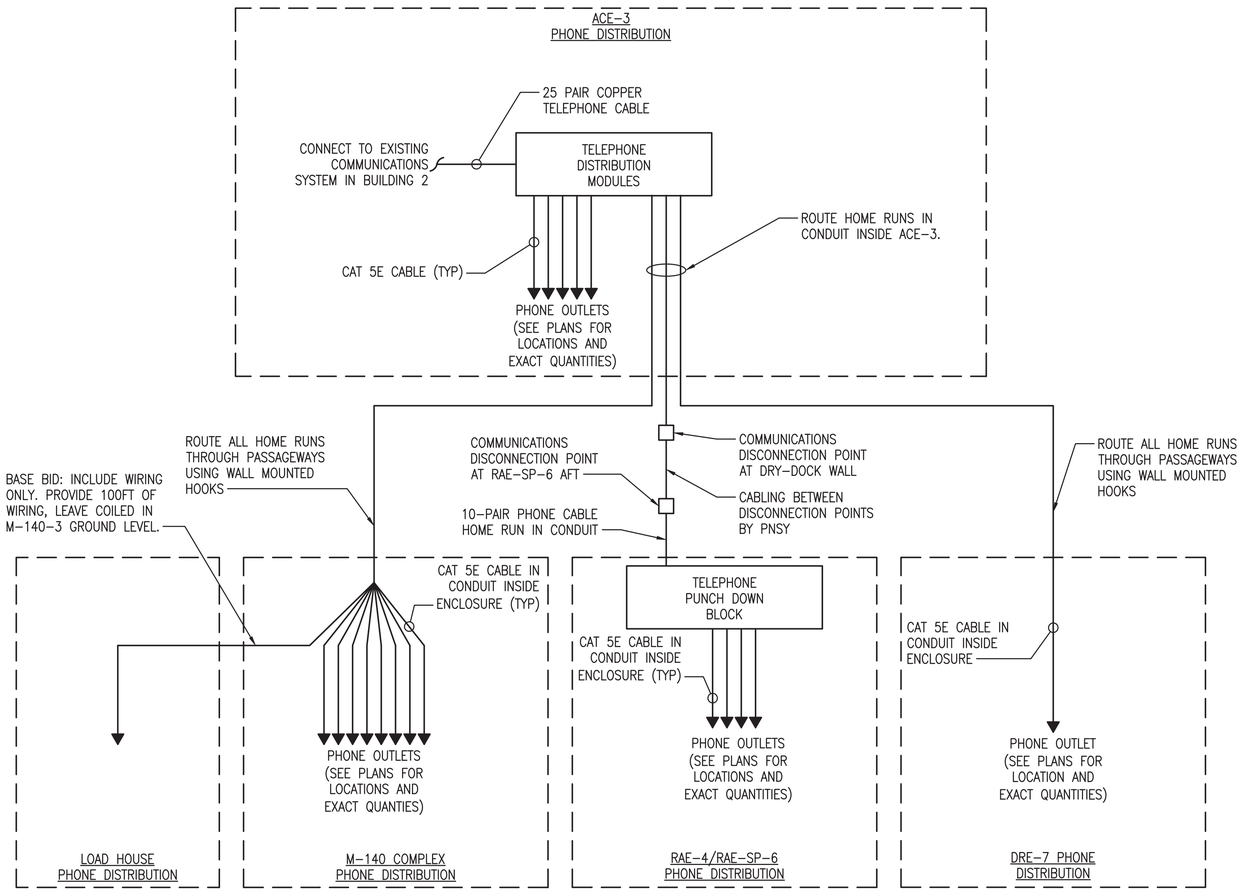

PHONE SYSTEM RISER DIAGRAM (B1)

SCALE: NTS

SYM	DESCRIPTION	DATE	APPR
0	ISSUED FOR CONSTRUCTION	10/28/2016	CBC

NAVFAC

STATE OF MAINE
JASON M. BEAULIEU
No. 13441
LICENSED PROFESSIONAL ENGINEER
10/28/16
SEAL

Colby Company engineering
A/E INFO

APPROVED
Digitally signed by David W. Greenfield
FOR COMMANDER NAVFAC

ACTIVITY
TIM FISHER
C. 2370.6 BRANCH HEAD

SATISFACTORY TO DATE 10/28/2016

DES	JMB	DRW	JMB	CHK	MRL

PMDM	PETER STOCKLESS
BRANCH MANAGER	IAN BODWELL
FEA/DPM&E	AMIN BAHROUR
FIRE PROTECTION	PATRICK BAKAJ

DEPARTMENT OF THE NAVY
NAVAL FACILITIES ENGINEERING COMMAND
PUBLIC WORKS DEPARTMENT - MAINE

NAVAL FACILITIES ENGINEERING COMMAND ~ MID-ATLANTIC
NAVAL SHIPYARD - PORTSMOUTH, NH

PORTSMOUTH NAVAL SHIPYARD
KITTERY, ME

DRY DOCK #1 DEFUELING COMPLEX
DRE-7

PHONE SYSTEM RISER DIAGRAM

EPROJECT NO.: 1363311

CONSTR. CONTR. NO.
N40085-17-C-5002

NAVFAC DRAWING NO.
12735081

SHEET 110 OF 117

E-502 | DD1-16-1162

DRAWFORM REVISION: 10 OCTOBER 2014

10/28/2016 7:10:27 AM X:\297 PORTSMOUTH NAVAL SHIPYARD\297.005.001 - DD#1 DEFUELING COMPLEX DESIGN\DRAWINGS\DRE7\SHEETS\E-502.DWG

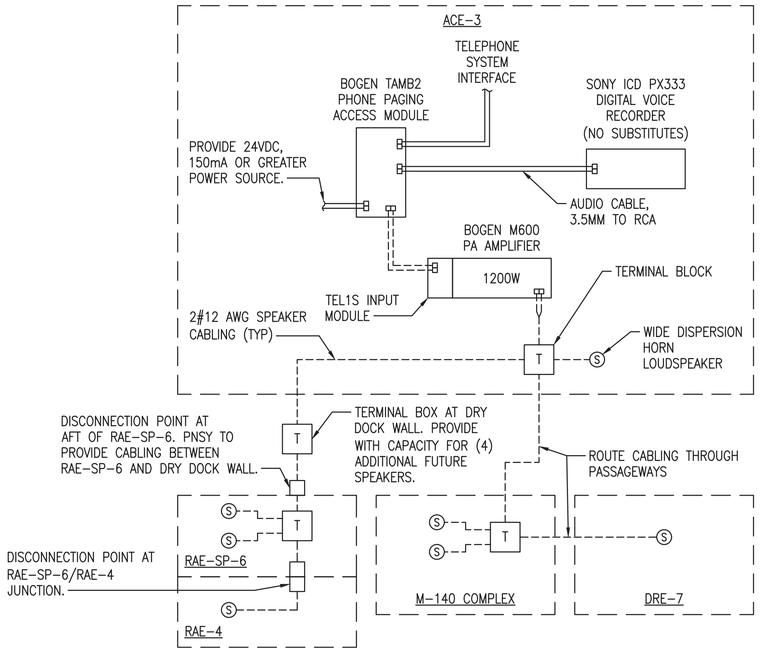

CASUALTY PA SCHEMATIC (C1)

SCALE: NTS

CASUALTY PA NOTES:

1. ALL CABLING SHALL BE RUN IN CONDUIT WITH EXCEPTION OF CABLING BETWEEN ENCLOSURES LOCATED INSIDE PASSAGEWAYS. PASSAGEWAY CABLING SHALL BE EXPOSED AND SUPPORTED FROM HOOKS INSTALLED IN PASSAGEWAYS.

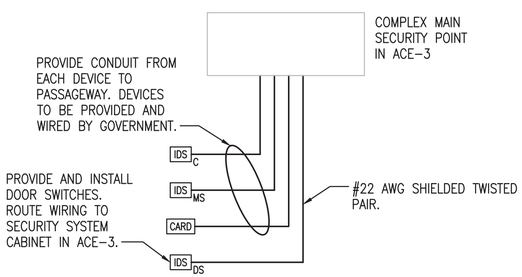

SECURITY SCHEMATIC (A1)

SCALE: NTS

SECURITY NOTES:

1. THIS SCHEMATIC IS FOR REQUIRED SYSTEM COMPONENT ILLUSTRATION ONLY. REFER TO FLOOR PLANS FOR ALL DEVICE QUANTITIES.
2. ALL CABLING INSIDE ENCLOSURES SHALL BE RUN IN CONDUIT. CABLING LOCATED INSIDE PASSAGEWAYS SHALL BE EXPOSED AND SUPPORTED FROM HOOKS INSTALLED IN PASSAGEWAYS.
3. ALL SECURITY SYSTEM WIRING AND CONNECTIONS SHALL BE PROTECTED FROM TAMPERING. CONDUIT SHALL NOT HAVE ACCESS COVERS.
4. JUNCTION BOXES AND WIRING FOR ALL SECURITY SYSTEM SHALL BE LOCATED INSIDE THE FACILITY.
5. MINIMIZE THE USE OF JUNCTION BOXES. ALL JUNCTION BOXES SHALL BE PROVIDED WITH A TAMPER SWITCH. SEE SECURITY SWITCH WIRING DIAGRAM (THIS SHEET).

DOOR STATE	TAMPER STATE	MAGNETIC SWITCH	CIRCUIT RESISTANCE
OPEN	SHUT	CLOSED	500 OHMS
SHUT	SHUT	OPEN	1K OHMS
OPEN	OPEN	CLOSED	INFINITY
SHUT	OPEN	OPEN	INFINITY

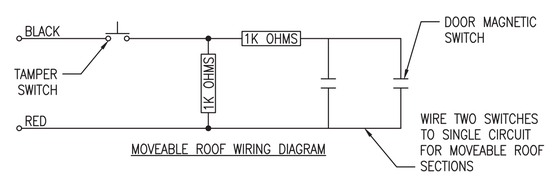

MOVEABLE ROOF WIRING DIAGRAM

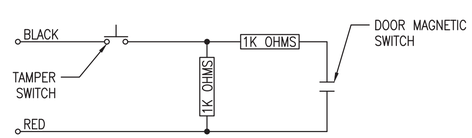

MAN DOOR WIRING DIAGRAM

SECURITY SWITCH WIRING DIAGRAM (A2)

SCALE: NTS

NOTES

1. SEE SHEET E-001 FOR LEGEND, ABBREVIATIONS AND GENERAL NOTES.

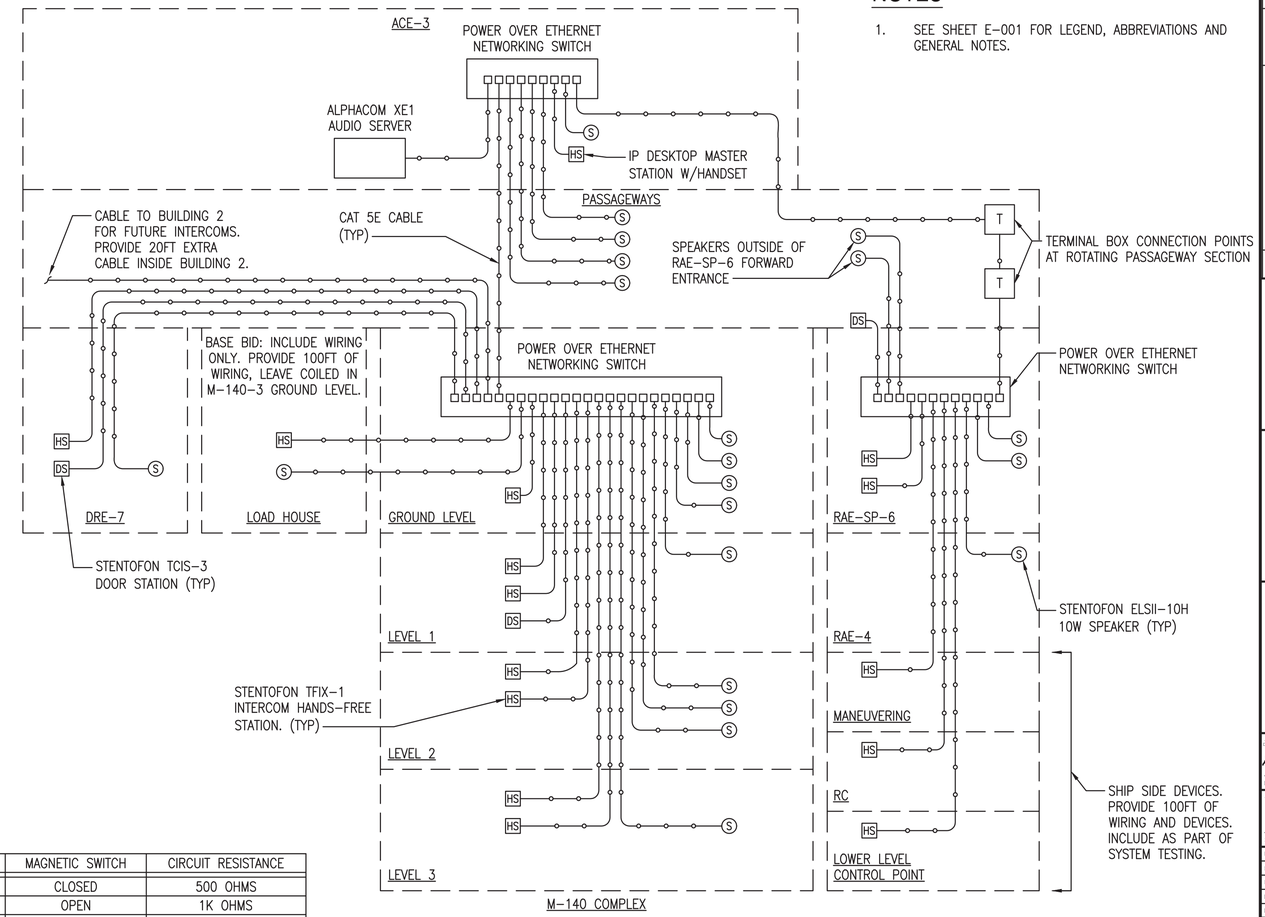

INTERCOM SCHEMATIC (B3)

SCALE: NTS

INTERCOM NOTES:

1. ALL CABLING SHALL BE RUN IN CONDUIT WITH EXCEPTION OF CABLING BETWEEN ENCLOSURES LOCATED INSIDE PASSAGEWAYS. PASSAGEWAY CABLING SHALL BE EXPOSED AND SUPPORTED FROM HOOKS INSTALLED IN PASSAGEWAYS.

SYM	DESCRIPTION	DATE	APPR
0	ISSUED FOR CONSTRUCTION	10/28/2016	CBC

NAVFAC

STATE OF MAINE JASON M. BEAULIEU No. 13441 LICENSED PROFESSIONAL ENGINEER 10/28/16 SEAL

Colby Company engineering A/E INFO

APPROVED Daniel W. Greenfield FOR COMMANDER NAVFAC

ACTIVITY TIM FISHER C. 2370.6 BRANCH HEAD

SATISFACTORY TO DATE 10/28/2016

DES JMB DRW JMB CHK MRL

PMDM PETER STOCKLESS

BRANCH MANAGER IAN BODWELL

FEAD/P&E AMIN BAHROUR

FIRE PROTECTION PATRICK BAKAJ

DEPARTMENT OF THE NAVY
NAVAL FACILITIES ENGINEERING COMMAND
PUBLIC WORKS DEPARTMENT - MAINE
NAVAL FACILITIES ENGINEERING COMMAND ~ MID-ATLANTIC
NAVAL SHIPYARD - PORTSMOUTH, NH
PORTSMOUTH NAVAL SHIPYARD
KITTERY, ME
DRY DOCK #1 DEFUELING COMPLEX
DRE-7
ELECTRICAL SCHEMATICS

EPROJECT NO.: 1363311

CONSTR. CONTR. NO. N40085-17-C-5002

NAVFAC DRAWING NO. 12735082

SHEET 111 OF 117

E-503 DD1-16-1163

DRAWFORM REVISION: 10 OCTOBER 2014

10/28/2016 7:10:31 AM X:\297 PORTSMOUTH NAVAL SHIPYARD\297.005.001 - DD#1 DEFUELING COMPLEX DESIGN\DRAWINGS\DRE7\SHEETS\E-503.DWG

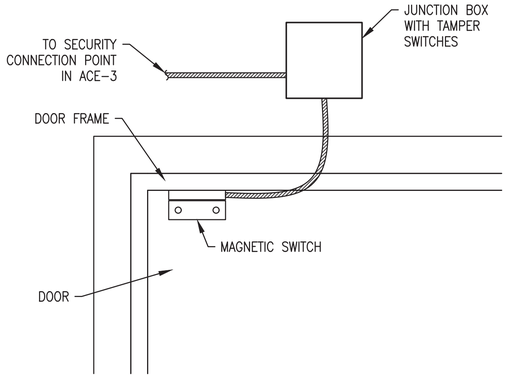

MAN DOOR SECURITY SWITCH DETAIL (C1)

SCALE: 3" = 1'-0"

NOTE: FOLLOW MANUFACTURERS INSTRUCTIONS FOR MOUNTING REQUIREMENTS.

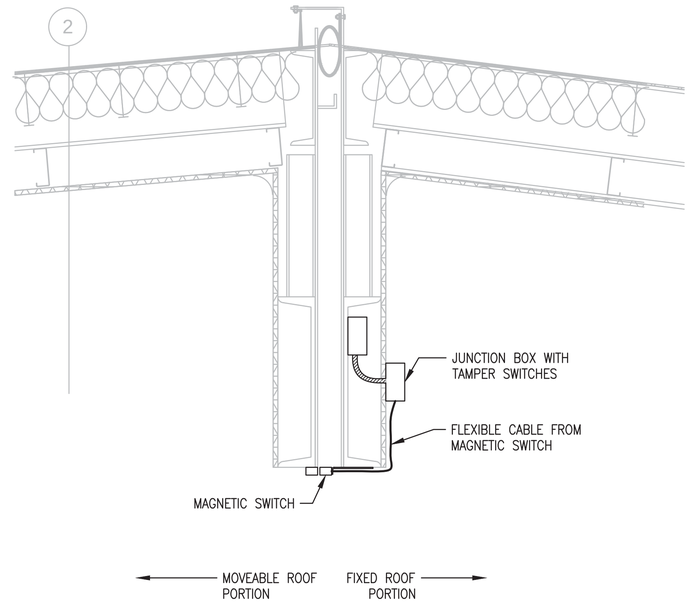

ROOF SECURITY SWITCH DETAIL (C3)

SCALE: 1-1/2" = 1'-0"

NOTE: FOLLOW MANUFACTURERS INSTRUCTIONS FOR MOUNTING REQUIREMENTS.

NOTES

1. SEE SHEET E-001 FOR LEGEND, ABBREVIATIONS AND GENERAL NOTES.

EQUIPMENT LABEL & CHARACTERISTICS (VOLTAGE, PHASE, FREQUENCY)

FED FROM PANEL XX, CIRCUIT XX

ELECTRICAL LABELING DETAIL (A1)

SCALE: NTS

NOTES:
1. LABEL SHALL BE ENGRAVED MELAMINE PLASTIC PLATES.

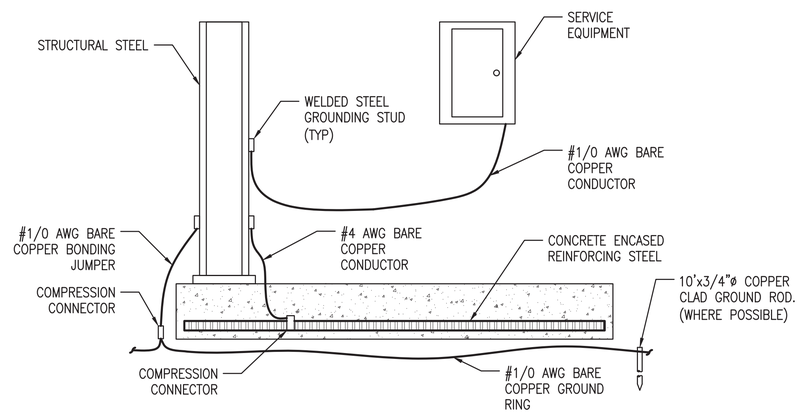

GROUNDING DIAGRAM (A2)

SCALE: NTS

NOTES:
1. WHERE GROUND RODS CANNOT BE DRIVEN TO PROPER DEPTHS ENSURE STRUCTURAL FOUNDATION REINFORCING IS BONDED TO PROVIDE ADEQUATE GROUNDING.
2. WHERE GROUND RODS ARE DRIVEN, PROVIDE A MINIMUM OF 3 RODS SPACED A MINIMUM OF 10FT APART.

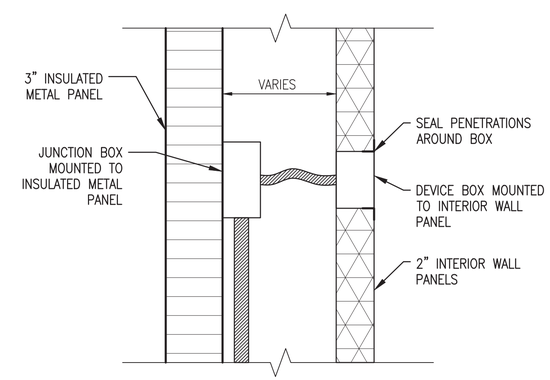

DEVICE BOX DETAIL (A4)

SCALE: 3" = 1'-0"

NOTES:
1. THIS DETAIL APPLIES TO ALL DEVICES MOUNTED ON EXTERIOR WALLS. INTERIOR PARTITIONS SHALL FOLLOW WALL PANEL MANUFACTURER'S INSTALLATION INSTRUCTIONS.
2. SEE A-506 FOR ADDITIONAL DETAILS.

0 1/2' 1' 1 1/2'
Scale: 1 1/2" = 1'-0"

0 3" 6" 9"
Scale: 3" = 1'-0"

SYM	DESCRIPTION	DATE	APPR
0	ISSUED FOR CONSTRUCTION	10/28/2016	CBC

NAVFAC

STATE OF MAINE
JASON M. BEAULIEU
No. 13441
LICENSED PROFESSIONAL ENGINEER
10/28/16
SEAL

Colby Company engineering
A/E INFO

APPROVED (Signature)
Daniel W. Greenfield
FOR COMMANDER NAVFAC

ACTIVITY: TIM FISHER, C. 2370.6 BRANCH HEAD
SATISFACTORY TO DATE 10/28/2016

DES JMB | DRW JMB | CHK MRL
PM/DM: PETER STOCKLESS
BRANCH MANAGER: IAN BODWELL
FEAD/PM&E: AMIN BAHROUR
FIRE PROTECTION: PATRICK BAKAJ

DEPARTMENT OF THE NAVY
NAVAL FACILITIES ENGINEERING COMMAND
PUBLIC WORKS DEPARTMENT - MAINE
NAVAL FACILITIES ENGINEERING COMMAND ~ MID-ATLANTIC
NAVAL SHIPYARD - PORTSMOUTH, NH
PORTSMOUTH NAVAL SHIPYARD
KITTERY, ME
DRY DOCK #1 DEFUELING COMPLEX
DRE-7
ELECTRICAL DETAILS

EPROJECT NO.: 1363311
CONSTR. CONTR. NO. N40085-17-C-5002
NAVFAC DRAWING NO. 12735083
SHEET 112 OF 117
E-504 | DD1-16-1164

DRAWFORM REVISION: 10 OCTOBER 2014

10/28/2016 7:10:35 AM X:\297 PORTSMOUTH NAVAL SHIPYARD\297.005.001 - DD#1 DEFUELING COMPLEX DESIGN\DRAWINGS\DRE7\SHEETS\E-504.DWG

PANELBOARD NO:	DRE-7 PANEL 1	SC RATING:	65 KAIC
PANELBOARD TYPE:	SQUARE D NQOD	MOUNTING:	SURFACE
PANEL LOCATION:	GROUND LEVEL	VOLTAGE:	480V, 3-PHASE, 3-WIRE
SUPPLIED FROM:	M140-3 PANEL 0		

150 AMP MAIN BREAKER
150 AMP BUS (COPPER)

CKT NO.	TRIP AMPS	NO. POLES	WIRE / CONDUIT	GND. WIRE	LOAD SERVED	LOAD VA	ϕ	LOAD VA	LOAD SERVED	WIRE / CONDUIT	GND. WIRE	NO. POLES	TRIP AMPS	CKT NO.
1	50	3	3#8 / 3/4"	#10	PANEL DRE-7 PANEL 2 (THRU DRE-7 TX)	2740	A	14410	VENTILATION SKID FAN	3#3 / 1"	#8	3	100	2
3						4584	B	14410						4
5						2993	C	14410						6
7	50	3	3#6 / 3/4"	#10	CRANE	TBD	A	582	ROOF SYSTEM MOTORS	3#12 / 3/4"	#12	3	20	8
9						TBD	B	582						10
11						TBD	C	582						12
13							A	1000	UNIT HEATER EUH-1	3#12 / 3/4"	#12	3	15	14
15							B	1000						16
17							C	1000						18
19							A							20
21							B							22
23							C							24
25							A							26
27							B							28
29							C							30
31							A							32
33							B							34
35							C							36
37							A		SURGE PROTECTION (NOTE 1)			3	20	38
39							B							40
41							C							42

TOTAL PHASE A LOAD = 18.7 KVA
TOTAL PHASE B LOAD = 20.6 KVA
TOTAL PHASE C LOAD = 19.0 KVA
TOTAL CONNECTED LOAD = 58.3 KVA

NOTES: 1. REFER TO MANUFACTURER'S REQUIREMENTS FOR CB AND WIRING SIZE

DRE-7 PANEL 1 SCHEDULE (C1)

SCALE: NTS

PANELBOARD NO:	DRE-7 PANEL 2	SC RATING:	22 KAIC
PANELBOARD TYPE:	SQUARE D NQOD	MOUNTING:	SURFACE
PANEL LOCATION:	GROUND LEVEL	VOLTAGE:	208Y/120V, 3-PHASE, 4-WIRE
SUPPLIED FROM:	DRE-7 PANEL 1		

100 AMP MAIN BREAKER
100 AMP BUS (COPPER)

CKT NO.	TRIP AMPS	NO. POLES	WIRE / CONDUIT	GND. WIRE	LOAD SERVED	LOAD VA	ϕ	LOAD VA	LOAD SERVED	WIRE / CONDUIT	GND. WIRE	NO. POLES	TRIP AMPS	CKT NO.
1	20	1	2#12 / 3/4"	#12	RECEPTACLES WEST/SOUTH	900	A	200	LOCAL CONTROL PANEL	2#12 / 3/4"	#12	1	20	2
3	20	1	2#12 / 3/4"	#12	RECEPTACLES EAST/NORTH	900	B	1000	M140 PASSAGEWAY HEATER	2#12 / 3/4"	#12	2	15	4
5	20	1	2#12 / 3/4"	#12	RECEPTACLE NEAR PANELBOARD	180	C	1000						6
7	20	1	2#12 / 3/4"	#12	RECEPTACLES CRANE LEVEL	360	A	1000	M140 PASSAGEWAY HEATER	2#12 / 3/4"	#12	2	15	8
9	20	1	2#12 / 3/4"	#12	INTERIOR LIGHTING	1504	B	1000						10
11	20	1	2#12 / 3/4"	#12	EXTERIOR LIGHTING	1261	C	192	M140 PASSAGEWAY LIGHTING	2#12 / 3/4"	#12	1	20	12
13	20	1	2#12 / 3/4"	#12	PASSAGEWAY MAG DOOR LOCK	100	A	180	VACUUM RECEPTACLE	2#12 / 3/4"	#12	1	20	14
15							B	180	VACUUM RECEPTACLE	2#12 / 3/4"	#12	1	20	16
17							C	360	HVAC SKID RECEPTACLES	2#12 / 3/4"	#12	1	20	18
19							A							20
21							B							22
23							C							24
25							A							26
27							B							28
29							C							30
31							A							32
33							B							34
35							C							36
37							A							38
39							B							40
41							C							42

TOTAL PHASE A LOAD = 2.7 KVA
TOTAL PHASE B LOAD = 4.6 KVA
TOTAL PHASE C LOAD = 3.0 KVA
TOTAL CONNECTED LOAD = 10.3 KVA

NOTES:

DRE-7 PANEL 2 SCHEDULE (C3)

SCALE: NTS

TYPE	DESCRIPTION	VOLT	MANUFACTURER (OR EQUAL)	LAMPS	MOUNTING	NOTES
B	4' LONG FLUORESCENT SLIM LOW PROFILE SURFACE MOUNT PROVIDED WITH ACRYLIC LENS AND ELECTRONIC BALLAST	120	COLUMBIA W4-132-EPU	(1) - 32W T8	CEILING	
C	3' LONG WORK LIGHT WITH POLYCARBONATE SHELL AND ULTRA DURABLE CORD AND FEED THRU PLUG	120	LEXCOMMANDER B6700-B	(3) - 40W CFL	WALL	WALL MOUNT FIXTURE ON HOOKS 96" AFF UNLESS OTHERWISE NOTED COORDINATE WITH ARCHITECTURAL DETAIL A4 ON SHEET A-506
AA	EXTERIOR WALL MOUNTED LED FIXTURE WITH BLACK FINISH AND TYPE IV DISTRIBUTION	120	HUBBELL LMC-30LU-4K-4-2	70W LED	WALL	CONTROL LIGHT FIXTURES THROUGH TIMER SWITCH. MOUNT FIXTURES 12FT AFF UNLESS OTHERWISE NOTED. SEE ARCHITECTURAL SHEETS FOR MOUNTING DETAILS.
BB	LED FLOOD LIGHT FIXTURE WITH BLACK FINISH AND MEDIUM DISTRIBUTION	120	HUBBELL MLED-80LU-5K-M-BL	187W LED	WALL	CONTROL LIGHT FIXTURES THROUGH TIMER SWITCH. MOUNT FIXTURES 40FT AFF UNLESS OTHERWISE NOTED. SEE ARCHITECTURAL SHEETS FOR MOUNTING DETAILS.
CC	EXTERIOR BATTERY BACKED UP WALL MOUNTED LED EMERGENCY LIGHT FIXTURE WITH BLACK FINISH	120	DUAL LITE PGB-HTR	15W LED	WALL	MOUNT FIXTURES 7FT AFF UNLESS OTHERWISE NOTED. SEE ARCHITECTURAL SHEETS FOR MOUNTING DETAILS.
	LED EXIT SIGN PROVIDED WITH MAINTENANCE FREE NICKEL-CADMIUM BATTERY AND SELF-DIAGNOSITC ELECTRONICS.	120	DUAL LITE SESRWEI	LED	WALL	
	DUAL HEAD HIGH LUMEN OUTPUT EMERGENCY FIXTURE PROVIDED WITH THERMOPLASTIC HOUSING, LITHIUM IRON PHOSPHATE BATTERY, AND SELF-DIAGNOSTIC ELECTRONICS	120	DUAL LITE EVHC12I-06LBC	6W LED	WALL	

LIGHT FIXTURE SCHEDULE (A1)

SCALE: NTS

SYM	DESCRIPTION	DATE	APPR
0	ISSUED FOR CONSTRUCTION	10/28/2016	CBC

NAVFAC

STATE OF MAINE
JASON M. BEAULIEU
No. 13441
LICENSED
PROFESSIONAL ENGINEER
10/28/16
SEAL

Colby Company engineering
A/E INFO

APPROVED (Signature)
Daniel W. Greenfield
FOR COMMANDER NAVFAC

ACTIVITY
TIM FISHER
C. 2370.6 BRANCH HEAD

SATISFACTORY TO DATE 10/28/2016
DES JMB DRW JMB CHK MRL
PM/DM PETER STOCKLESS
BRANCH MANAGER IAN BODWELL
FEA/DPM&E AMIN BAHROUR
FIRE PROTECTION PATRICK BAKAJ

NAVAL FACILITIES ENGINEERING COMMAND
NAVAL FACILITIES ENGINEERING COMMAND ~ MID-ATLANTIC
NAVAL SHIPYARD - PORTSMOUTH, NH
KITTERY, ME
DEPARTMENT OF THE NAVY
PUBLIC WORKS DEPARTMENT - MAINE
PORTSMOUTH NAVAL SHIPYARD
DRY DOCK #1 DEFUELING COMPLEX
DRE-7
ELECTRICAL SCHEDULES

EPROJECT NO.: 1363311
CONSTR. CONTR. NO.: N40085-17-C-5002
NAVFAC DRAWING NO. 12735084
SHEET 113 OF 117
E-601 DD1-16-1165

DRAWFORM REVISION: 10 OCTOBER 2014

10/28/2016 7:10:39 AM X:\297 PORTSMOUTH NAVAL SHIPYARD\297.005.001 - DD#1 DEFUELING COMPLEX DESIGN\DRAWINGS\DRE7\SHEETS\E-601.DWG

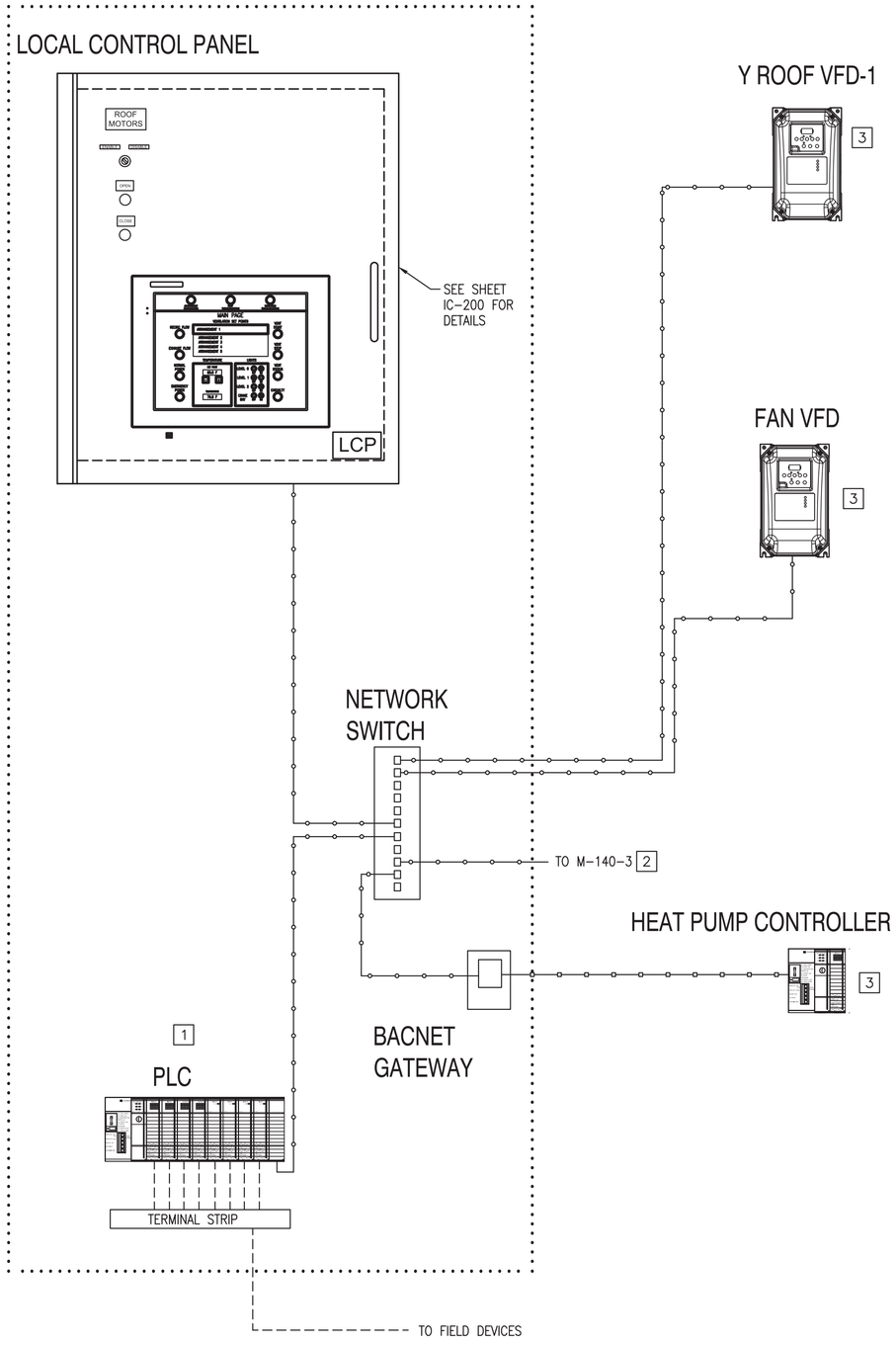

CONTROL NETWORK SCHEMATIC

SCALE: NTS

A1

KEYED NOTES

1. MAIN LCP ITEMS SHOWN OUTSIDE THE ENCLOSURE FOR CLARITY
2. ROUTE TO SEPARATE ENCLOSURE THROUGH PASSAGEWAYS.
3. COORDINATE WITH MECHANICAL CONTRACTOR.

NOTES

1. SEE SHEET E-001 FOR LEGEND ABBREVIATIONS AND GENERAL NOTES.
2. ALL NETWORKING AND CONTROL WIRING SHALL BE INSTALLED IN EMT CONDUIT.

LEGEND

- UTP CAT5E, ETHERNET/IP
- HARDWIRED 2-CONDUCTOR 16 AWG
- 2-WIRE, SHIELDED, BACNET MS/TP
- MULTI-CONDUCTOR CABLE

AI	ANALOG INPUT
AO	ANALOG OUTPUT
AWG	AMERICAN WIRE GAGE
IP	INDUSTRIAL PROTOCOL
LED	LIGHT EMITTING DIODE
PB	PUSHBUTTON
DI	DIGITAL INPUT
DO	DIGITAL OUTPUT
DP	DIFFERENTIAL PRESSURE
MS	MASTER-SLAVE
TP	TOKEN-PASSING
UTP	UNSHIELDED TWISTED PAIR

INPUT/OUTPUT SUMMARY TABLE

DESCRIPTION	IO TYPE
CRANE PLATFORM LIGHTING CONTROL	DO
CRANE PLATFORM LIGHTING SWITCH	DI
DIFFERENTIAL PRESSURE TRANSMITTER	AI
GROUND LEVEL LIGHTING CONTROL	DO
GROUND LEVEL LIGHTING SWITCH	DI
FAN INLET FLOW MEASURING STATION	AI
FAN LED STATUS INDICATOR	DO
FAN PROVING DP SWITCH	DI
FAN START COMMAND	DO
FAN START PB	DI
FAN STOP PB	DI
EXHAUST AIR DAMPER CONTROL	AO
EXHAUST AIR FLOW MEASURING STATION	AI
AIR PARTICULATE SAMPLING PRESSURE SENSOR	AI
RETURN AIR DAMPER CONTROL 1	AO
RETURN AIR DAMPER CONTROL 2	AO
SUPPLY AIR DAMPER CONTROL	AO
SUPPLY AIR TEMPERATURE	AI
ENGINEERED VENT DAMPER CONTROL 1	AO
ENGINEERED VENT DAMPER CONTROL 2	AO
ENGINEERED VENT FLOW RATE 1	AI
ENGINEERED VENT FLOW RATE 2	AI
SPACE TEMPERATURE	AI
ROOF CLOSE COMMAND	DO
ROOF CLOSE PB	DI
ROOF CLOSE PB LED INDICATOR	DO
ROOF CLOSE SPEED-CHANGE LIMIT SWITCH	DI
ROOF CLOSED POSITION LIMIT SWITCH	DI
ROOF MOTORS ENABLE SWITCH	DI
ROOF MOTORS ENABLE SWITCH STATUS	DI
ROOF OPEN COMMAND	DO
ROOF OPEN PB	DI
ROOF OPEN PB LED INDICATOR	DO
ROOF OPEN POSITION LIMIT SWITCH	DI
ROOF OPEN SPEED-CHANGE LIMIT SWITCH	DI
ELECTRIC HEATER CONTROL	AO

INPUT/OUTPUT LIST

SCALE: NTS

A4

SYM	DESCRIPTION	DATE	APPR
0	ISSUED FOR CONSTRUCTION	10/28/2016	CBC

NAVFAC

STATE OF MAINE
JASON M. BEAULIEU
No. 13441
LICENSED PROFESSIONAL ENGINEER
10/28/16
SEAL

Colby Company engineering
A/E INFO

APPROVED
DAVID W. GRUNFELD
FOR COMMANDER NAVFAC

ACTIVITY
TIM FISHER
C. 2370.6 BRANCH HEAD

SATISFACTORY TO DATE 10/28/2016
DES JMB DRW JMB CHK MRL
PMDM PETER STOCKLESS
BRANCH MANAGER IAN BODWELL
FEA/DPM&E AMIN BAHROUR
FIRE PROTECTION PATRICK BAKAJ

DEPARTMENT OF THE NAVY
NAVAL FACILITIES ENGINEERING COMMAND
PUBLIC WORKS DEPARTMENT - MAINE
NAVAL FACILITIES ENGINEERING COMMAND ~ MID-ATLANTIC
NAVAL SHIPYARD - PORTSMOUTH, NH
PORTSMOUTH NAVAL SHIPYARD
KITTERY, ME
DRY DOCK #1 DEFUELING COMPLEX
DRE-7
LOCAL CONTROL SYSTEM NETWORK AND POINTS LIST

EPROJECT NO.: 1363311
CONSTR. CONTR. NO. N40085-17-C-5002
NAVFAC DRAWING NO. 12735085
SHEET 114 OF 117
IC-101 DD1-16-1166

DRAWFORM REVISION: 10 OCTOBER 2014

10/28/2016 7:10:46 AM X:\297 PORTSMOUTH NAVAL SHIPYARD\297.005.001 - DD#1 DEFUELING COMPLEX DESIGN\DRAWINGS\DRE7\SHEETS\IC-101.DWG

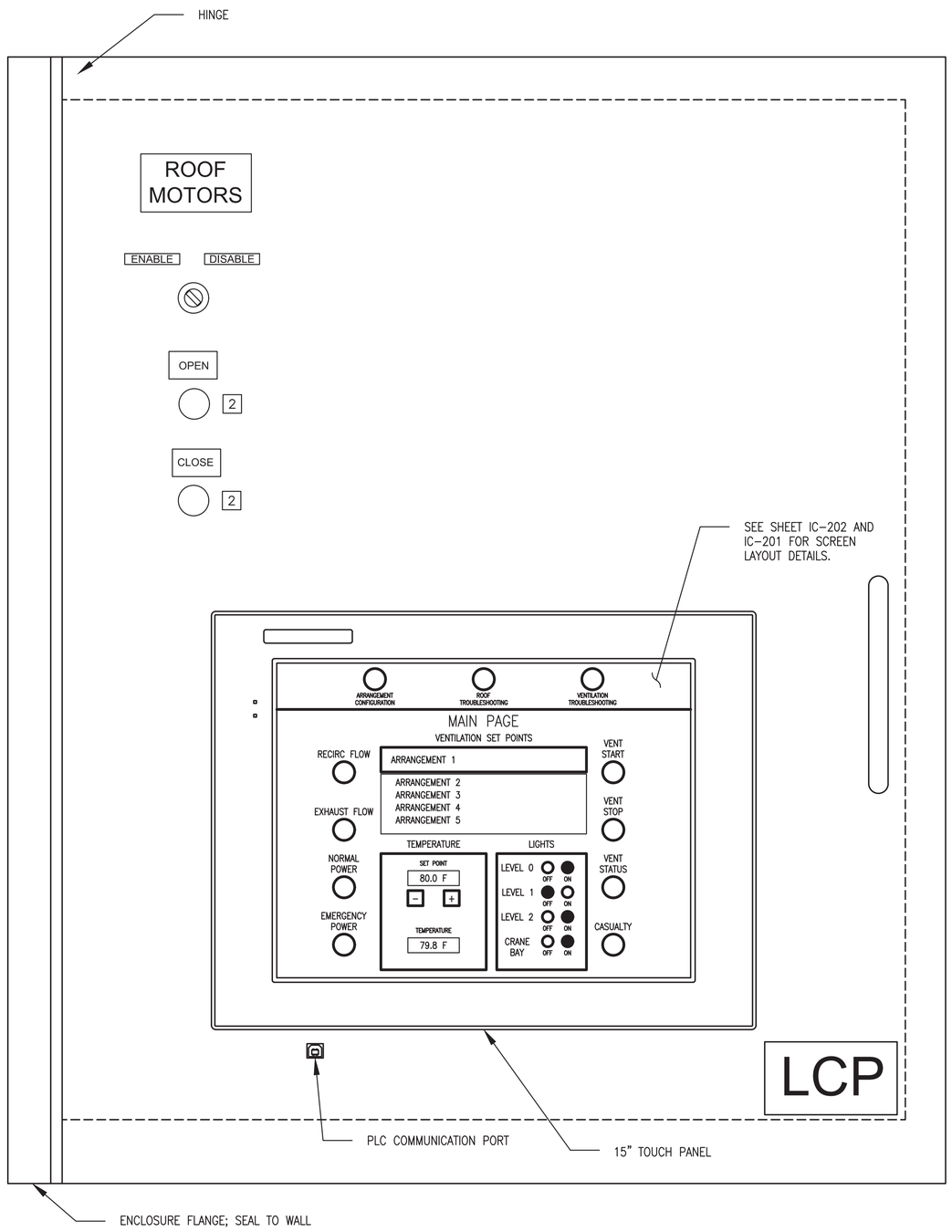

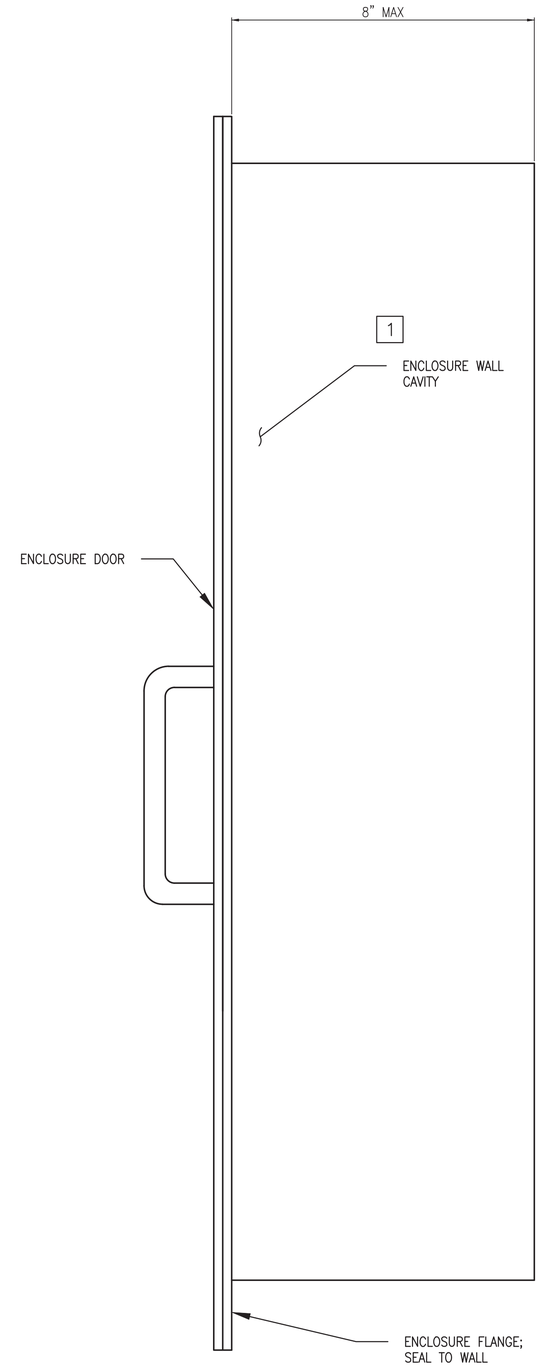

NOTES

1. SEE SHEET E-001 FOR LEGEND ABBREVIATIONS AND GENERAL NOTES.

LEGEND

- KEYED SELECTOR SWITCH
- MOMENTARY PUSHBUTTON
- LED INDICATOR

KEYED NOTES

1. LOCAL CONTROL PANEL IS POWDER COATED STEEL CONSTRUCTION WITH DOOR FLUSH-MOUNTED TO WALL. CONTROL SYSTEM CONTRACTOR TO COORDINATE REQUIRED ENCLOSURE DIMENSIONS WITH OTHER TRADES. ENCLOSURE WALL CAVITY DIMENSIONS ARE APPROXIMATELY 25WX30HX8D.
2. PUSH BUTTONS SHALL BE FLUSH STYLE BUTTONS TO PREVENT INADVERTENT OPERATION.

LOCAL CONTROL PANEL EXTERIOR (A1)

SCALE: NTS

SYM	DESCRIPTION	DATE	APPR
0	ISSUED FOR CONSTRUCTION	10/28/2016	CBC

NAVFAC

STATE OF MAINE — JASON M. BEAULIEU No. 13441 — LICENSED PROFESSIONAL ENGINEER — 10/28/16 — SEAL

Colby Company engineering — A/E INFO

APPROVED: Daniel W. Greenfield — FOR COMMANDER NAVFAC

ACTIVITY: TIM FISHER, C. 2370.6 BRANCH HEAD

SATISFACTORY TO DATE 10/28/2016

DES JMB | DRW JMB | CHK MRL

PMDM: PETER STOCKLESS

BRANCH MANAGER: IAN BODWELL

FEA/PM&E: AMIN BAHROUR

FIRE PROTECTION: PATRICK BAKAJ

DEPARTMENT OF THE NAVY — NAVAL FACILITIES ENGINEERING COMMAND — PUBLIC WORKS DEPARTMENT, MAINE

NAVAL FACILITIES ENGINEERING COMMAND ~ MID-ATLANTIC — NAVAL SHIPYARD, PORTSMOUTH, NH

PORTSMOUTH NAVAL SHIPYARD — KITTERY, ME

DRY DOCK #1 DEFUELING COMPLEX — DRE-7

LOCAL CONTROL PANEL EXTERIOR

EPROJECT NO.: 1363311

CONSTR. CONTR. NO.: N40085-17-C-5002

NAVFAC DRAWING NO.: 12735086

SHEET 115 OF 117

IC-200 | DD1-16-1167

DRAWFORM REVISION: 10 OCTOBER 2014

10/28/2016 7:10:51 AM X:\297 PORTSMOUTH NAVAL SHIPYARD\297.005.001 - DD#1 DEFUELING COMPLEX DESIGN\DRAWINGS\DRE7\SHEET\IC-200.DWG

NOTES

1. SEE SHEET E-001 FOR LEGEND ABBREVIATIONS AND GENERAL NOTES.
2. DIAGRAMS ARE SUGGESTED GUIDANCE FOR SCREEN LAYOUTS. CONTRACTOR IS ALLOWED TO MODIFY AS NECESSARY. SUBMIT PROPOSED SCREEN LAYOUTS PRIOR TO PROGRAMMING.

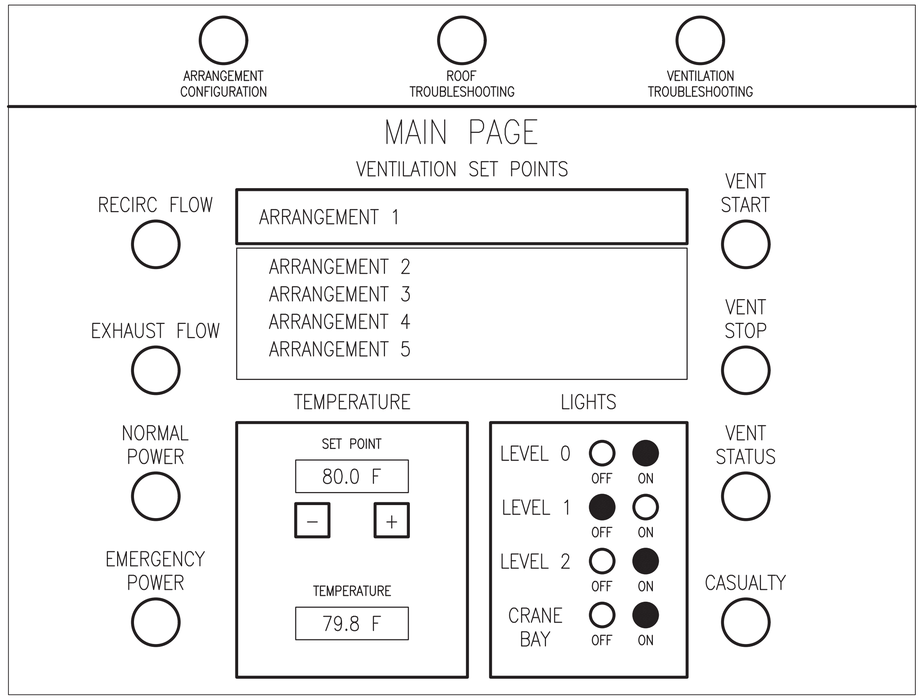

LOCAL CONTROL PANEL MAIN SCREEN (B1)

SCALE: NTS

NOTES:
ARRANGEMENTS (OR PRE-SET CONFIGURATIONS) WILL BE ON A DROP DOWN MENU INITIATED WHEN THE SELECTED ARRANGEMENT IS TOUCHED AND HELD FOR 5 SECONDS. THE ARRANGEMENT SELECTION WILL THEN BRING UP THE CONFIRMATION SCREEN WITH A CONFIRMATION SELECTION: "CONFIRM SELECT ARRANGEMENT X, YES OR NO." WITH THE ARRANGEMENT SETTINGS SHOWN IN THE WINDOW SO THE OPERATOR CAN VERIFY THE ARRANGEMENT THEN SELECT YES OR NO.

RECIRC FLOW AND EXHAUST FLOW ARE INDICATORS THAT LIGHT WHEN THERE IS AIR FLOW IN EACH RESPECTIVE PARTS OF THE VENT SYSTEM. IF FLOW IS NOT PRESENT AN AUDIBLE ALARM SHOULD SOUND AND INDICATOR SHOULD BLINK UNTIL ACKNOWLEDGED AND SILENCED BY PRESSING ON THE INDICATOR. THIS SHOULD POP UP A WINDOW WITH A RESET BUTTON WHICH WILL STOP THE INDICATOR FROM FLASHING IF THIS IS THE INTENDED CONDITION (I.E. SHUTTING THE SYSTEM DOWN), IF NOT THE INDICATOR WILL REMAIN FLASHING UNTIL FLOW HAS RETURNED AND THE RESET BUTTON IS PUSHED. THIS ALARM AND SILENCE CONDITION SHOULD NOT CAUSE ANY OTHER FUNCTION OF THE CONTROL PANEL TO BECOME INOPERABLE.

TEMPERATURE CONTROLS ADJUSTMENT BUTTONS ALLOW INCREMENT AND DECREMENT OF SETPOINT IN 1 DEGREE INTERVALS.

LIGHT CONTROLS ALLOW CONTROL OF LIGHTING ON EACH LEVEL (NOT ALL LEVELS SHOWN). CONTROL PANEL WILL INTEGRATE WITH THREE-WAY CONTROL OF LIGHTING ON CRANE LEVEL.

VENT START AND VENT STOP BUTTONS SHOULD HAVE A DELAY OF 5 SECONDS PROGRAMMED IN SO THE VENT SYSTEM CANNOT BE TURNED OFF BY INADVERTENT CONTACT. PURPOSEFUL SHUTDOWN OF VENTILATION SYSTEM SHALL NOT SOUND A ALARM. VENT STATUS BUTTON WILL DISPLAY A READ ONLY DISPLAY OF THE CONFIGURATION SCREEN FOR THE CURRENT ARRANGEMENT.

CASUALTY BUTTON WILL BRING UP A READ/WRITE DISPLAY OF THE CONFIGURATION SCREEN TO ALLOW IMMEDIATE TEMPORARY CHANGES IN THE VENTILATION SYSTEM. CASUALTY BUTTON WILL NEED TO BE TOUCHED AND HELD FOR 5 SECONDS SO IT CANNOT BE ACCIDENTALLY SELECTED.

TOP ROW OF CONFIGURATION AND TROUBLESHOOTING BUTTONS WILL PROMPT FOR A PIN CODE TO ENTER CONFIGURATION OR TROUBLESHOOTING SCREEN. "ARRANGEMENT CONFIGURATION" BUTTON SHALL OPEN A READ/WRITE DISPLAY OF THE CONFIGURATION SCREEN. "ROOF TROUBLESHOOTING" BUTTON SHALL OPEN ROOF TROUBLE SHOOTING SCREEN. "VENTILATION TROUBLESHOOTING" BUTTON SHALL OPEN VENTILATION TROUBLESHOOTING SCREEN.

ROOF AND VENTILATION TROUBLESHOOTING BUTTONS SHALL FLASH FOR FAULTS OR ERRORS IN RESPECTIVE SYSTEM.

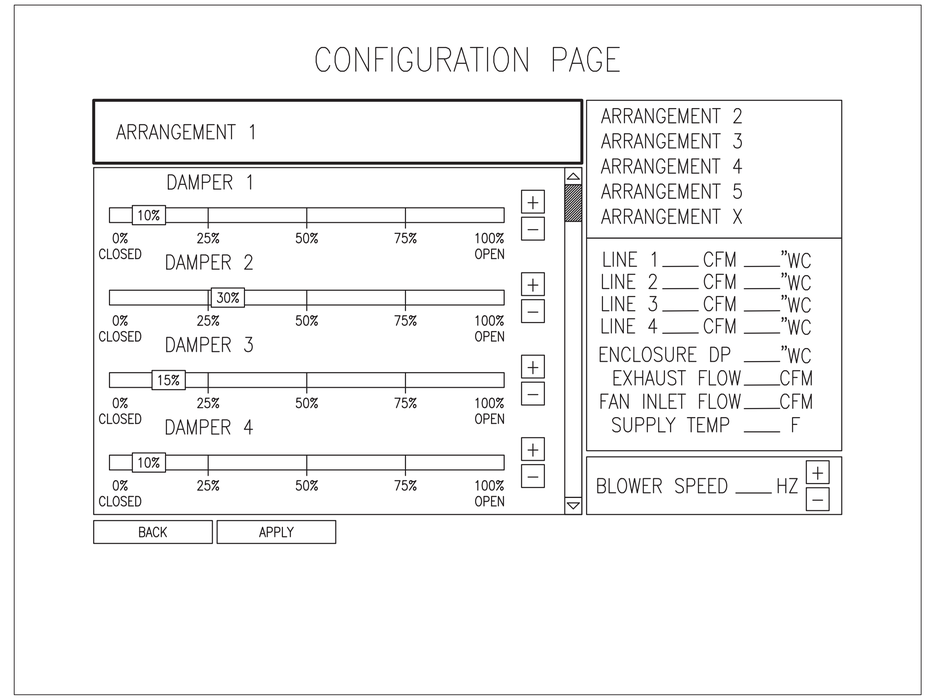

LOCAL CONTROL PANEL CONFIGURATION SCREEN (B3)

SCALE: NTS

NOTES:
THE CONFIGURATION PAGE IS WHERE THE ARRANGEMENTS CAN BE SETUP AND THE INDICATIONS OF AVERAGED (OVER 5 SECONDS) CFMs AND DPs WILL BE SHOWN.

EACH DAMPER IN THE ENCLOSURE VENTILATION SYSTEM WILL HAVE A SLIDER AND FINE ADJUST +/- BUTTONS TO ADJUST THE DAMPER. DAMPER SHALL BE NAMED TO CLEARLY IDENTIFY DAMPER LOCATION.

BLOWER SPEED SHALL INDICATE UNITS TO MATCH VFD CONTROLLER.

THE "BACK" BUTTON WILL RETURN TO THE MAIN SCREEN WITHOUT SAVING ANY CHANGES. THE "APPLY" BUTTON WILL BRING UP A CONFIRMATION SCREEN TO SAVE ALL CHANGES AND THEN RETURN TO THE MAIN SCREEN. DO NOT SHOW APPLY BUTTON WHEN IN READ ONLY MODE OF CONFIGURATION PAGE.

SYM	DESCRIPTION	DATE	APPR
0	ISSUED FOR CONSTRUCTION	10/28/2016	CBC

NAVFAC

STATE OF MAINE
JASON M. BEAULIEU
No. 13441
LICENSED PROFESSIONAL ENGINEER
10/28/16
SEAL

Colby Company engineering
A/E INFO

APPROVED
Daniel W. Greenfield
FOR COMMANDER NAVFAC

ACTIVITY
TIM FISHER
C. 2370.6 BRANCH HEAD

SATISFACTORY TO DATE 10/28/2016

DES JMB | DRW JMB | CHK MRL
PM/DM PETER STOCKLESS
BRANCH MANAGER IAN BODWELL
FEAD/PMAE AMIN BAHROUR
FIRE PROTECTION PATRICK BAKAJ

DEPARTMENT OF THE NAVY
NAVAL FACILITIES ENGINEERING COMMAND
PUBLIC WORKS DEPARTMENT - MAINE
NAVAL FACILITIES ENGINEERING COMMAND ~ MID-ATLANTIC
NAVAL SHIPYARD - PORTSMOUTH, NH
PORTSMOUTH NAVAL SHIPYARD
KITTERY, ME
DRY DOCK #1 DEFUELING COMPLEX
DRE-7
CONTROL PANEL SCREEN LAYOUTS

EPROJECT NO.: 1363311
CONSTR. CONTR. NO. N40085-17-C-5002
NAVFAC DRAWING NO. 12735087
SHEET 116 OF 117
IC-201 | DD1-16-1168

DRAWFORM REVISION: 10 OCTOBER 2014

10/28/2016 7:10:55 AM X:\297 PORTSMOUTH NAVAL SHIPYARD\297.005.001 - DD#1 DEFUELING COMPLEX DESIGN\DRAWINGS\DRE7\SHEETS\IC-201.DWG

NOTES

1. SEE SHEET E-001 FOR LEGEND ABBREVIATIONS AND GENERAL NOTES.
2. DIAGRAMS ARE SUGGESTED GUIDANCE FOR SCREEN LAYOUTS. CONTRACTOR IS ALLOWED TO MODIFY AS NECESSARY. SUBMIT PROPOSED SCREEN LAYOUTS PRIOR TO PROGRAMMING.

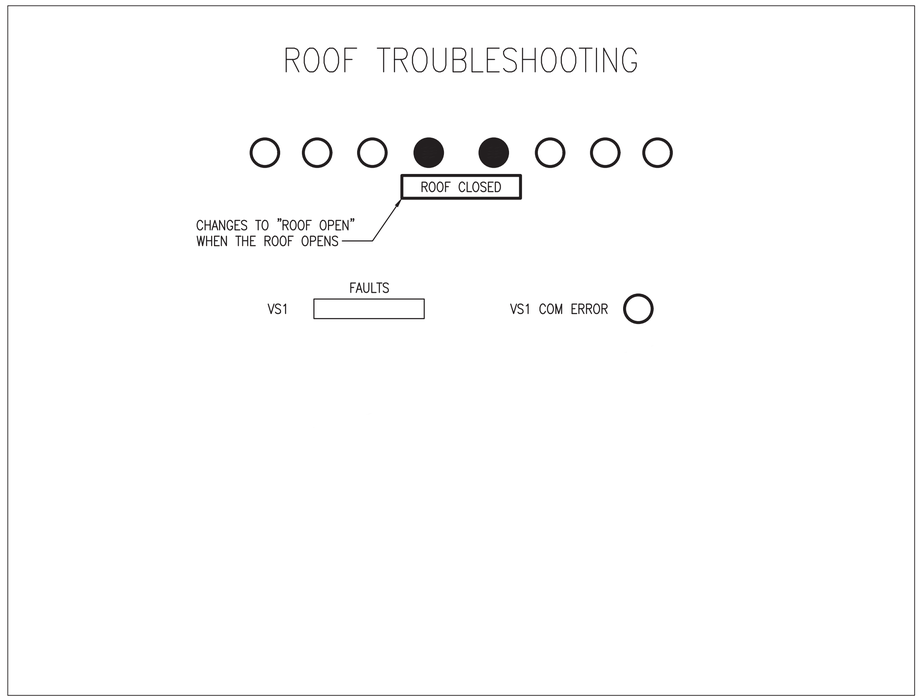

LOCAL CONTROL PANEL ROOF TROUBLE SHOOTING SCREEN (B1)

SCALE: NTS

NOTES:
THIS PAGE WILL BE AVAILABLE FOR ENGINEERS TROUBLESHOOTING ISSUES AND PROBLEMS. ROOF MOTOR DRIVE FAULTS WILL SHOW AT THIS LOCATION AS WELL. THIS ALARM SHOULD NOT CAUSE ANY OTHER FUNCTIONALITY OF THE LCP TO BE LOST.

THIS SCREEN SHALL BE ACCESSED FROM BUTTON AT TOP OF MAIN PAGE.

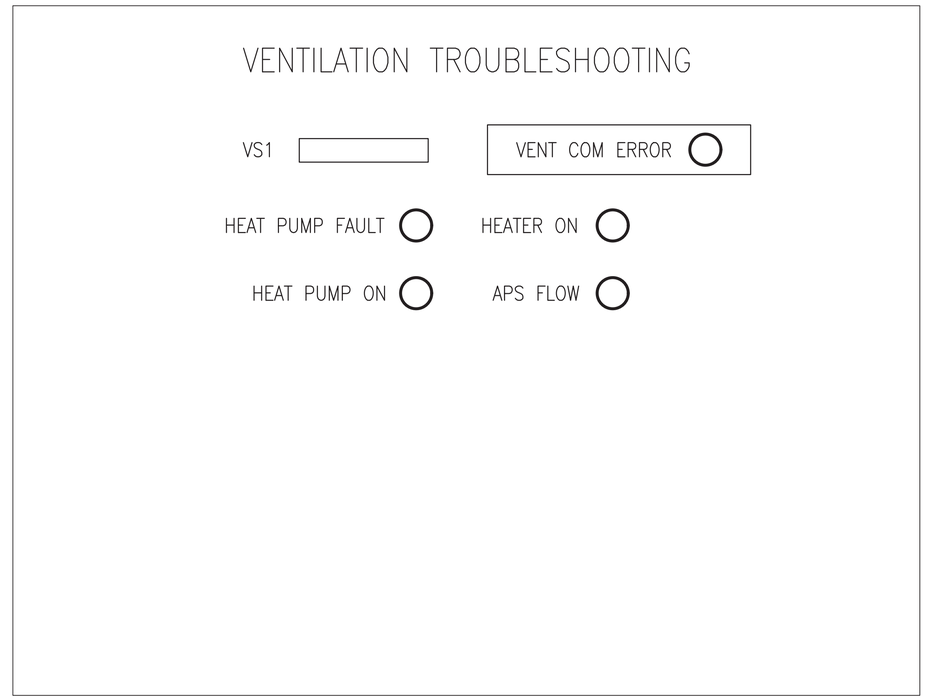

LOCAL CONTROL PANEL VENTILATION TROUBLE SHOOTING SCREEN (B3)

SCALE: NTS

NOTES:
THIS PAGE WILL BE AVAILABLE FOR ENGINEERS TROUBLESHOOTING ISSUES AND PROBLEMS. VENTILATION FAN DRIVE FAULTS WILL SHOW AT THIS LOCATION AS WELL. THIS ALARM SHOULD NOT CAUSE ANY OTHER FUNCTIONALITY OF THE LCP TO BE LOST.

THIS SCREEN SHALL BE ACCESSED FROM BUTTON AT TOP OF MAIN PAGE.

APS FLOW SHALL INDICATE FLOW THROUGH APS LINE. IF FLOW FAILS IT SHALL CREATE A WARNING THAT POPS UP OVER MAIN SCREEN. THE WARNING SHALL HAVE THE ABILITY TO BE ACKNOWLEDGED AND DISMISSED.

SYM	DESCRIPTION	DATE	APPR
0	ISSUED FOR CONSTRUCTION	10/28/2016	CBC

NAVFAC

STATE OF MAINE
JASON M. BEAULIEU
No. 13441
LICENSED PROFESSIONAL ENGINEER
10/28/16
SEAL

Colby Company engineering
A/E INFO

APPROVED
Daniel W. Greenfield
FOR COMMANDER NAVFAC

ACTIVITY
TIM FISHER
C. 2370.6 BRANCH HEAD

SATISFACTORY TO DATE 10/28/2016

DES JMB DRW JMB CHK MRL

PMDM PETER STOCKLESS

BRANCH MANAGER IAN BODWELL

FEAD/PM&E AMIN BAHROUR

FIRE PROTECTION PATRICK BAKAJ

DEPARTMENT OF THE NAVY
NAVAL FACILITIES ENGINEERING COMMAND
PUBLIC WORKS DEPARTMENT - MAINE

NAVAL FACILITIES ENGINEERING COMMAND ~ MID-ATLANTIC
NAVAL SHIPYARD - PORTSMOUTH, NH

PORTSMOUTH NAVAL SHIPYARD
KITTERY, ME

DRY DOCK #1 DEFUELING COMPLEX
DRE-7

CONTROL PANEL TROUBLE SHOOTING SCREEN LAYOUTS

EPROJECT NO.: 1363311

CONSTR. CONTR. NO.
N40085-17-C-5002

NAVFAC DRAWING NO.
12735088

SHEET 117 OF 117

IC-202 | DD1-16-1169

DRAWFORM REVISION: 10 OCTOBER 2014

10/28/2016 7:11:00 AM X:\297 PORTSMOUTH NAVAL SHIPYARD\297.005.001 - DD#1 DEFUELING COMPLEX DESIGN\DRAWINGS\DRE7\SHEETS\IC-202.DWG