DRAWING INDEX

SHEET OF	SHEET NO	SHEET TITLE
		MECHANICAL
172	M-001	MECHANICAL GENERAL NOTES, ABBREVIATIONS AND LEGEND
173	M-101	300 YARD HEAD HVAC PLAN, ELEVATION AND SECTION
174	M-102	PIT HEADS AND BUTTHOUSE HVAC PLANS, ELEVATIONS AND SECTIONS
175	M-501	MECHANICAL DETAILS
176	M-502	MECHANICAL DETAILS
177	M-601	MECHANICAL SCHEDULES
178	M-602	MECHANICAL SCHEDULES AND SEQUENCE OF OPERATION
		ELECTRICAL
179	E-001	ELECTRICAL ABBREVIATIONS AND LEGEND
180	E-002	ELECTRICAL NOTES
181	E-003	ELECTRICAL DEMOLITION NOTES
182	ED-100	ELECTRICAL DEMOLITION SITE PLAN
183	ED-401	ENLARGED ELECTRICAL DEMOLITION PLAN
184	ED-402	ENLARGED ELECTRICAL DEMOLITION PLAN
185	ED-403	ENLARGED ELECTRICAL DEMOLITION PLAN
186	ES-100	OVERALL ELECTRICAL SITE PLAN
187	ES-101	ELECTRICAL SITE PLAN
188	ES-102	ELECTRICAL SITE PLAN
189	ES-103	ELECTRICAL SITE PLAN
190	ES-104	ELECTRICAL SITE PLAN
191	ES-105	ELECTRICAL SITE PLAN
192	ES-106	ELECTRICAL SITE PLAN
193	EG-100	LIGHTNING PROTECTION PLAN
194	E-401	ENLARGED ELECTRICAL PLANS
195	E-402	ENLARGED ELECTRICAL PLANS TARGET STORAGE BUILDINGS
196	E-403	ENLARGED ELECTRICAL PLANS BUTTHOUSE
197	E-404	ENLARGED ELECTRICAL PLANS PIT HEADS
198	E-405	ENLARGED ELECTRICAL PLANS BUTTS AREA
199	E-406	ENLARGED ELECTRICAL PLANS
200	E-501	ELECTRICAL DETAILS
201	E-502	ELECTRICAL DETAILS
202	E-503	ELECTRICAL DETAILS
203	E-504	ELECTRICAL DETAILS
204	E-505	ELECTRICAL DETAILS
205	E-506	ELECTRICAL DETAILS
206	E-507	ELECTRICAL DETAILS
207	E-601	ELECTRICAL RISER DIAGRAMS
208	E-602	ELECTRICAL PANEL SCHEDULES
209	E-603	ELECTRICAL PANEL SCHEDULES
210	E-604	ELECTRIC RISER DIAGRAMS
211	E-605	ELECTRICAL LIGHTING SCHEDULE & ENERGY STATEMENT
212	E-606	ELECTRICAL ENERGY STATEMENTS
213	E-607	ELECTRICAL ENERGY STATEMENTS

DRAWING INDEX

NAVFAC DWG #	SHEET NO	SHEET TITLE
		REFERENCES (ORGINAL CONSTRUCTION DRAWINGS)
1215108	R-101	OUTDOOR RIFLE RANGE RETAINING WALL
1215111	R-102	OUTDOOR RIFLE RANGE CONTROL HOUSE & CONTROL TOWER
1215112	R-103	OUTDOOR RIFLE RANGE TARGET STORAGE SHED
5374264	R-104	NEW HEAD AT INCHON RANGE ROOF PLAN SECTIONS AND DETAILS
5374258	R-105	NEW HEAD AT INCHON RANGE PLANS, ELEVATIONS AND DETAILS
5374265	R-106	MISCELLANEOUS SECTIONS AND DETAILS
5374247	R-107	WATER UTILITY AND SANITARY SEWER DETAILS

SYM	DESCRIPTION	DATE	APPR
1	ADDED REFERENCE DWGS	8/16/16	

NAVFAC

NORTH CAROLINA PROFESSIONAL ENGINEER SEAL 03763 GALEN M. JAMISON

Aug 13 2016 10:30 AM
SEAL

CATLIN
Engineers and Scientists
220 Old Dairy Road
Wilmington, NC 28405
Corporate Licensure No. for Engineering Services C-0585
A/E INFO

APPROVED
FOR COMMANDER NAVFAC
ACTIVITY
SATISFACTORY TO DATE
DES JAR DRW JAR CHK GJ
PM/DM EH
BRANCH MANAGER NY
CHIEF ENG/ARCH
FIRE PROTECTION

DEPARTMENT OF THE NAVY
NAVAL FACILITIES ENGINEERING COMMAND
NAVAL FACILITIES ENGINEERING COMMAND ~ MIDATLANTIC
IPT NORTH CAROLINA LAFAYETTE COMPLEX, NORFOLK, VIRGINIA
U.S. MARINE CORPS RECRUIT DEPOT PARRIS ISLAND, SC
RANGE SAFETY IMPROVEMENTS & MODERNIZATION
DRAWING INDEX

SCALE: SEE PLAN
EPROJECT NO.: 1354718
CONSTR. CONTR. NO.
NAVFAC DRAWING NO. 12723868
SHEET 3 OF 213
GI-003
DRAWFORM REVISION: 10 MARCH 2009

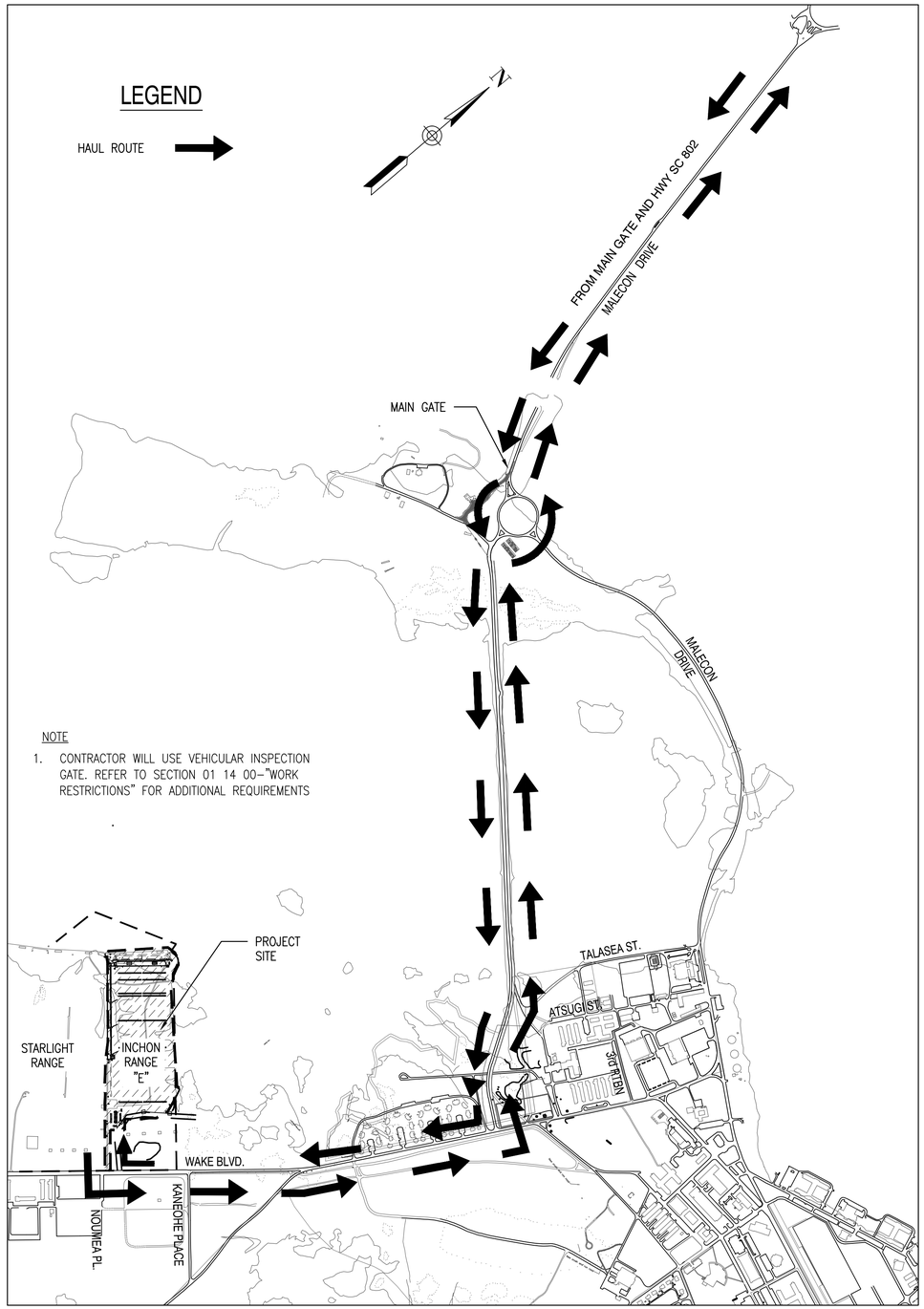

NOTE

1. CONTRACTOR WILL USE VEHICULAR INSPECTION GATE. REFER TO SECTION 01 14 00–"WORK RESTRICTIONS" FOR ADDITIONAL REQUIREMENTS

HAUL ROUTE

NTS

PLAN NORTH

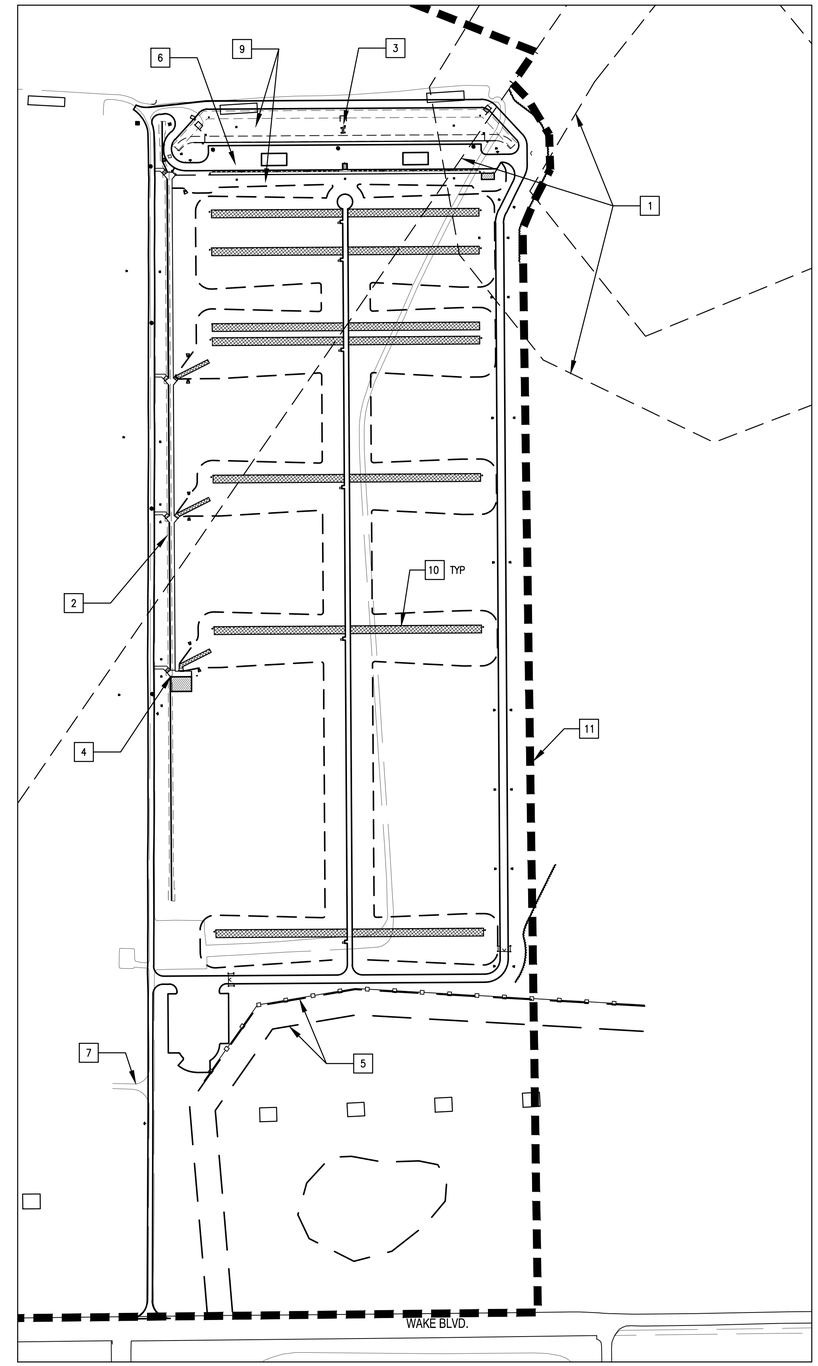

GENERAL CONSTRUCTION PLAN

NTS

PLAN NORTH

GENERAL NOTES

THIS GENERAL CONSTRUCTION PLAN IS INTENDED TO SUMMARIZE THE CONSTRAINTS AND CRITERIA TO BE USED IN THE CONTRACTORS NETWORK ANALYSIS SCHEDULES. REFER TO SECTION 01 14 00– "WORK RESTRICTIONS", SECTION 01 32 17.00 20– "COST–LOADED NETWORK ANALYSIS SCHEDULES NAS" AND CIVIL DRAWINGS FOR ADDITIONAL INFORMATION.

KEY NOTES

1. PROVIDE UXO SUPPORT FOR CONSTRUCTION. REMOVE ANOMALIES IDENTIFIED IN UXO SURVEY AS THE FIRST ITEM OF CONSTRUCTION. REFER TO SECTION 02 51 43–"CONSTRUCTION SUPPORT MUNITIONS AND EXPLOSIVES OF CONCERN CLEARANCE" FOR REQUIREMENTS.
2. SIDE SAFETY WALL MUST BE COMPLETED PRIOR TO WORK IN REGULAR WORK HOURS. REFER TO SECTION 01 14 00–"WORK RESTRICTIONS" FOR ADDITIONAL INFORMATION.
3. IMPORTING, PLACING, AND BACKFILLING OF THE BALLISTIC BACKFILL MATERIAL MUST BE PERFORMED IN THE PRESENCE OF THE CONTRACTING OFFICER. COORDINATE WORK OUTSIDE REGULAR WORKING HOURS WITH CONTRACTING OFFICER.
4. IDENTIFY IN THE NAS ALL SITE SANITARY AND WATER DISTRIBUTION TO BE OWNED AND OPERATED BY BJWSA AS INDICATED IN THE CU DRAWINGS. REFER TO SECTION 33 11 00 –"WATER DISTRIBUTION" AND SECTION 33 30 00 –"SANITARY SEWERS" FOR ADDITIONAL INFORMATION.
5. IDENTIFY IN THE NAS ALL WORK PREFORMED IN THE CULTURAL RESTRICTIVE AREA.
6. EXISTING TARGET BERM IS ANTICIPATED TO CONTAIN BULLET FRAGMENTS. REFER TO SECTION 01 35 26–"GOVERNMENTAL SAFETY REQUIREMENTS", 02 83 13.00 20–"LEAD IN CONSTRUCTION" AND KEY NOTE #9 ON CD DRAWINGS FOR ADDITIONAL REQUIREMENTS.
7. MAINTAIN DRIVEWAY TO STAR LIGHT RANGE DURING REGULAR WORK HOURS, REFER TO SECTION 01 14 00–"WORK RESTRICTIONS" FOR ADDITIONAL INFORMATION.
8. PROJECT IS ADJACENT TIDALLY INFLUENCED WATERWAYS. COORDINATE DEWATERING, GRADING AND IMPLEMENTATION OF THE SWPPP ACCORDINGLY.
9. PRELOAD IMPACT AND TARGET BERM REFER A/CS–300 AND DETAIL B1/CS–517 FOR REQUIREMENTS.
10. PRELOAD FIRING LINE BERMS. REFER TO CS–300 AND CS–301 FOR REQUIREMENTS.
11. DEPOT ESTABLISHED ACTIVE RANGE BOUNDARY. 1

SYM	DESCRIPTION	DATE	APPR
1	EST. ACTIVE RANGE BOUNDARY	8/16/16	

NAVFAC

NORTH CAROLINA PROFESSIONAL ENGINEER SEAL 037630 JAMES ALLEN M. JAMISON

Aug 13 2016 10:30 AM

CATLIN Engineers and Scientists
220 Old Dairy Road
Wilmington, NC 28405
Corporate Licensure No. for Engineering Services C-0585

A/E INFO

APPROVED

FOR COMMANDER NAVFAC

ACTIVITY

SATISFACTORY TO DATE

DES	JAR	DRW	JAR	CHK	GJ
PM/DM	EH				
BRANCH MANAGER	NY				
CHIEF ENG/ARCH					
FIRE PROTECTION					

DEPARTMENT OF THE NAVY
NAVAL FACILITIES ENGINEERING COMMAND
IPT, NORTH CAROLINA

NAVAL FACILITIES ENGINEERING COMMAND ~ MIDATLANTIC
LAFAYETTE COMPLEX, NORFOLK, VIRGINIA

U.S. MARINE CORPS RECRUIT DEPOT
PARRIS ISLAND, SC

RANGE SAFETY IMPROVEMENTS & MODERNIZATION

HAUL ROUTE AND GENERAL CONSTRUCTION PLAN

SCALE: SEE PLAN
EPROJECT NO.: 1354718
CONSTR. CONTR. NO.
NAVFAC DRAWING NO. 12723898
SHEET 33 OF 213

C-002

DRAWFORM REVISION: 10 MARCH 2009

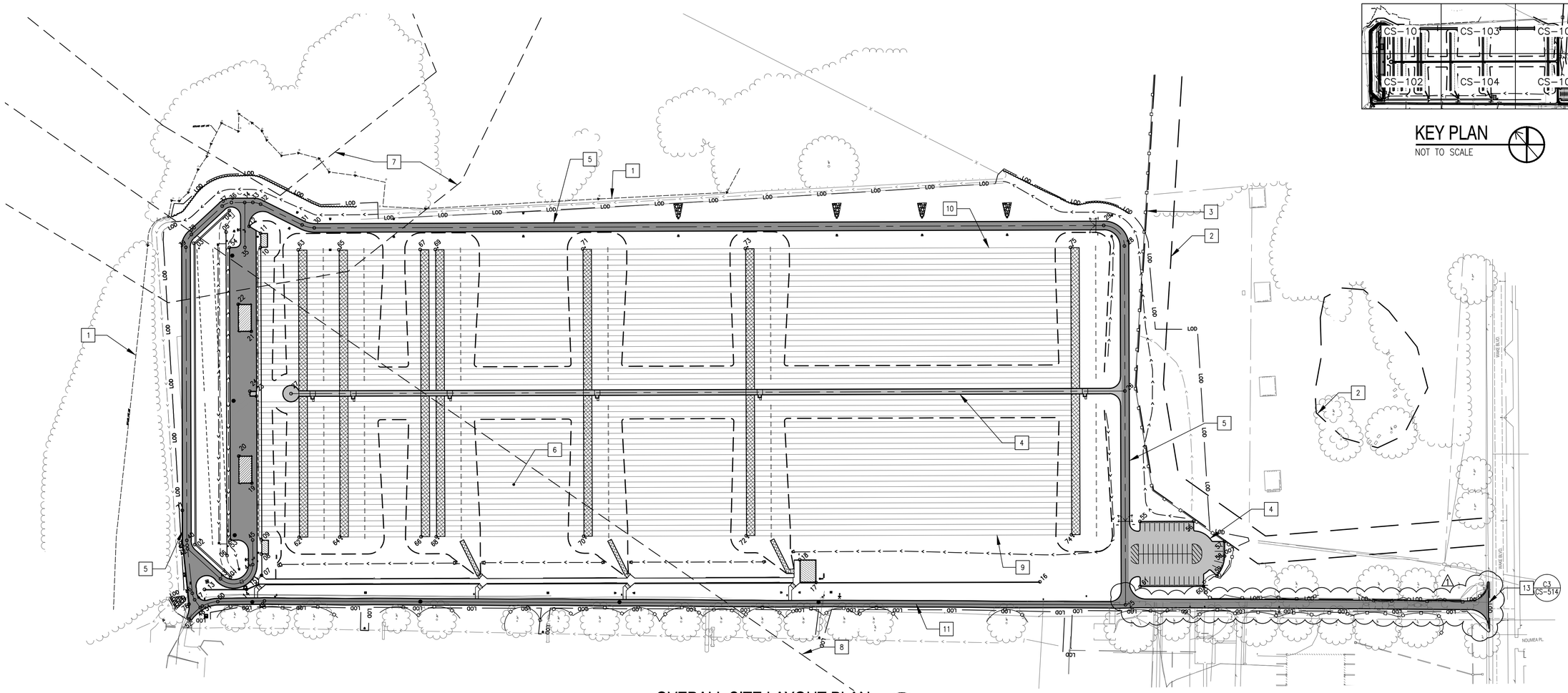

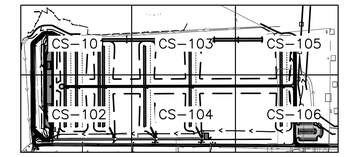

KEY PLAN
NOT TO SCALE

OVERALL SITE LAYOUT PLAN

1"=100'

LAYOUT POINT COORDINATE TABLE

POINT #	DISCRIPTION	NORTHING	EASTING
01	IMPACT BERM RETAINING WALL	184745.26	2090364.46
02	IMPACT BERM RETAINING WALL	184833.71	2090352.66
03	IMPACT BERM RETAINING WALL	185260.67	2090708.65
04	IMPACT BERM RETAINING WALL	185264.98	2090797.78
05	IMPACT BERM RETAINING WALL	185238.18	2090767.33
06	IMPACT BERM RETAINING WALL	184780.03	2090385.34
07	TARGET BERM RETAINING WALL	184710.98	2090410.46
08	FEMALE HEAD	184741.09	2090435.56
09	FEMALE HEAD	184761.06	2090452.21
10	MALE HEAD	185175.81	2090798.02
11	MALE HEAD	185195.78	2090814.67
12	TARGET BERM RETAINING WALL	185218.95	2090806.80
13	SIDE WALL	184758.77	2090313.09
14	SIDE WALL	184709.09	2090372.68
15	SIDE WALL	184703.12	2090394.11
16	SIDE WALL	183778.70	2091502.87
17	300 YARD HEAD	184043.37	2091185.69
18	300 YARD HEAD	184094.84	2091189.54
19	TARGET BUILDING	184852.91	2090505.99
20	TARGET BUILDING	184906.68	2090519.59
21	TARGET BUILDING	185067.98	2090685.33
22	TARGET BUILDING	185121.75	2090698.91
23	BUTT HOUSE BUILDING	184970.42	2090615.70
24	BUTT HOUSE BUILDING	184985.02	2090612.25
25	MAINTENANCE/STARLIGHT ROAD C.L.	183644.85	2091596.55
26	MAINTENANCE/CENTER ROAD C.L.	183947.83	2091849.17

POINT #	DISCRIPTION	NORTHING	EASTING
27	CENTER ROAD C.L.	184932.98	2090667.63
28	MAINTENANCE ROAD C.L.	184153.30	2092020.49
29	MAINTENANCE ROAD C.L.	184206.82	2092015.63
30	MAINTENANCE ROAD C.L.	185139.62	2090896.96
31	MAINTENANCE ROAD C.L.	185158.26	2090883.42
32	MAINTENANCE ROAD C.L.	185236.71	2090849.15
33	MAINTENANCE ROAD C.L.	185248.45	2090840.34
34	MAINTENANCE ROAD C.L.	185258.03	2090828.88
35	MAINTENANCE ROAD C.L.	185194.34	2090775.79
36	MAINTENANCE ROAD C.L.	185273.80	2090810.01
37	MAINTENANCE ROAD C.L.	185279.58	2090792.78
38	MAINTENANCE ROAD C.L.	185275.85	2090715.55
39	MAINTENANCE ROAD C.L.	185264.39	2090692.51
40	MAINTENANCE ROAD C.L.	184849.07	2090346.19
41	MAINTENANCE ROAD C.L.	184841.63	2090340.94
42	MAINTENANCE ROAD C.L.	184836.29	2090337.35
43	MAINTENANCE ROAD C.L.	184754.68	2090348.24
44	MAINTENANCE ROAD C.L.	184736.64	2090410.69
45	MAINTENANCE ROAD C.L.	184771.47	2090439.73
46	MAINTENANCE ROAD C.L.	184767.76	2090291.30
47	MAINTENANCE ROAD C.L.	184755.91	2090286.93
48	MAINTENANCE/STARLIGHT ROAD C.L.	184738.30	2090285.47
49	STARLIGHT ROAD C.L.	184671.47	2090384.26
50	STARLIGHT ROAD C.L.	184725.79	2090317.42
51	STARLIGHT ROAD C.L.	184737.73	2090290.35
52	STARLIGHT ROAD C.L.	184734.97	2090256.38

POINT #	DISCRIPTION	NORTHING	EASTING
52	STARLIGHT ROAD C.L.	184734.97	2090256.38
53	EDGE OF PAVEMENT	184797.89	2090408.04
54	EDGE OF PAVEMENT	185212.64	2090753.84
55	EDGE OF PAVEMENT	183745.59	2091715.87
56	EDGE OF PAVEMENT	183682.19	2091791.91
57	EDGE OF PAVEMENT	183616.87	2091811.66
58	EDGE OF PAVEMENT	183596.14	2091794.37
59	EDGE OF PAVEMENT	183577.48	2091760.42
60	EDGE OF PAVEMENT	183578.48	2091728.88
61	EDGE OF PAVEMENT	183653.41	2091639.02
62	25 YD FIRING LINE (SOUTH)	184720.39	2090508.79
63	25 YD FIRING LINE (NORTH)	185127.46	2090848.20
64	50 YD FIRING LINE (SOUTH)	184672.36	2090566.40
65	50 YD FIRING LINE (NORTH)	185079.43	2090905.80
66	100 YD FIRING LINE (SOUTH)	184576.31	2090681.61
67	100 YD FIRING LINE (NORTH)	184983.38	2091021.01
68	100 M. FIRING LINE (SOUTH)	184558.32	2090703.17
69	100 M. FIRING LINE (NORTH)	184965.39	2091042.58
70	200 YD FIRING LINE (SOUTH)	184384.19	2090912.02
71	200 YD FIRING LINE (NORTH)	184791.26	2091251.43
72	300 YD FIRING LINE (SOUTH)	184192.08	2091142.44
73	300 YD FIRING LINE (NORTH)	184599.15	2091481.84
74	500 YD FIRING LINE (SOUTH)	183807.85	2091603.27
75	500 YD FIRING LINE (NORTH)	184214.92	2091942.68
76	FACE OF HEADER CURB	184756.36	2090273.82
77	FACE OF HEADER CURB	184896.78	2090375.56

RADIUS TABLE

POINTS	C.L. RADIUS
28–29	38'
30–31	58'
32–33	32'
36–37	25'
38–39	32'
40–41	103'
43–44	23.5'
50–51	56'
51–52	75'

KEY NOTES

1. WETLAND / CRITICAL LINE. NO WORK PERMITTED IN THIS AREA
2. CULTURAL SENSITIVE AREA
3. CULTURAL SENSITIVE AREA 50' BUFFER
4. LIGHT DUTY ASPHALT
5. HEAVY DUTY ASPHALT
6. 10' WIDE FIRING LANE
7. UXO 4A BOUNDARY
8. UXO 4 BOUNDARY
9. LANE #1
10. LANE #50
11. STARLIGHT ROADWAY ALIGNMENT TO MATCH EXISTING, 12' WIDE
12. FIRING LINE SURFACE
13. CONNECT TO EXIST PAVEMENT

NOTES

1. PROVIDE SOIL CONDITIONERS AS SPECIFIED FOR SOIL PH REQUIREMENTS.
2. REFER TO CG-107 THRU CG-109 FOR TREE PROTECTION

N

100' 50' 0 100' 200'
1"=100'

SYM	DESCRIPTION	DATE	APPR
1	REVISED ROAD WIDTH	8/16/16	

NAVFAC

NORTH CAROLINA PROFESSIONAL ENGINEER SEAL 039630 GREGORY ALLEN M. JAMISON

Aug 13 2016 10:30 AM
SEAL

CATLIN Engineers and Scientists
220 Old Dairy Road
Wilmington, NC 28405
Corporate Licensure No. for Engineering Services C-0585

A/E INFO

APPROVED

FOR COMMANDER NAVFAC

ACTIVITY

SATISFACTORY TO DATE

DES JAR DRW JAR CHK GJ
PM/DM EH
BRANCH MANAGER NY
CHIEF ENG/ARCH
FIRE PROTECTION

DEPARTMENT OF THE NAVY
NAVAL FACILITIES ENGINEERING COMMAND
IPT NORTH CAROLINA
NAVAL FACILITIES ENGINEERING COMMAND ~ MIDATLANTIC
LAFAYETTE COMPLEX, NORFOLK, VIRGINIA
U.S. MARINE CORPS RECRUIT DEPOT
PARRIS ISLAND, SC
RANGE SAFETY IMPROVEMENTS & MODERNIZATION
OVERALL SITE LAYOUT PLAN

SCALE: 1"=100'
EPROJECT NO.: 1354718
CONSTR. CONTR. NO.
NAVFAC DRAWING NO. 12723906
SHEET 41 OF 213

CS-100

DRAWFORM REVISION: 10 MARCH 2009

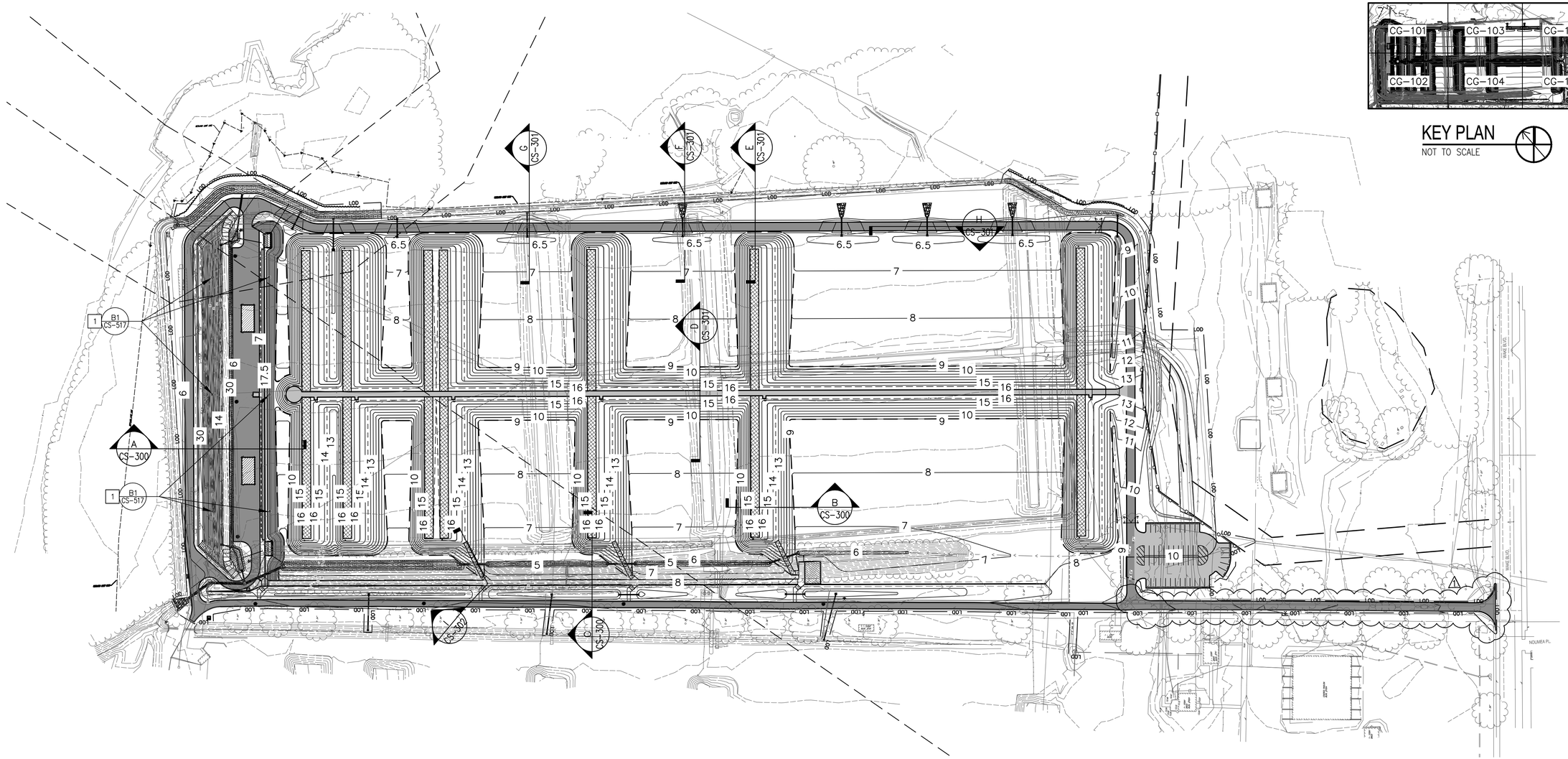

OVERALL SITE GRADING AND DRAINAGE PLAN

1"=100'

STORMDRAIN STRUCTURE LOCATION DATA TABLE

STRUCTURE	PIPE SIZE	NORTHING	EASTING
ENDWALL #1	15" RCP	185276.33	2090831.19
ENDWALL #2	36" RCP	184770.97	2090275.58
FES #1	15" RCP	185339.15	2090778.77
FES #2	15" RCP	185224.68	2090759.09
FES #3	12"x18" ERCP	185182.49	2090892.71
FES #4	12"x18" ERCP	185168.23	2090859.65
FES #5	12"x18" ERCP	185134.72	2090931.04
FES #6	12"x18" ERCP	185059.56	2091021.04
FES #7	12"x18" ERCP	185031.88	2090998.02
FES #8	12"x18" ERCP	184914.20	2091211.05
FES #9	12"x18" ERCP	184878.81	2091181.62
FES #10	15" RCP	184791.69	2090397.92
FES #11	12"x18" ERCP	184747.92	2090386.60
FES #12	29"x45" ERCP	184703.35	2090451.66
FES #13	24"x38" ERCP	184501.09	2090696.59
FES #14	24"x38" ERCP	184464.07	2090741.23
FES #15	12" RCP	184513.24	2090492.26
FES #16	12"x18" ERCP	184723.35	2091424.28

STRUCTURE	PIPE SIZE	NORTHING	EASTING
FES #17	12"x18" ERCP	184695.68	2091401.25
FES #18	12"x18" ERCP	184536.12	2091648.82
FES #19	12"x18" ERCP	184508.45	2091625.79
FES #20	19"x30" ERCP	184325.82	2090906.81
FES #21	19"x30" ERCP	184290.21	2090949.75
FES #22	19"x30" ERCP	184135.06	2091134.71
FES #23	19"x30" ERCP	184113.36	2091192.01
FES #24	12"x18" ERCP	184435.34	2091769.68
FES #25	12"x18" ERCP	184407.66	2091746.66
FES #26	12"x18" ERCP	184334.87	2091890.17
FES #27	12"x18" ERCP	184307.19	2091867.15
FES #28	12"x18" ERCP	184212.82	2092040.31
FES #29	12"x18" ERCP	184181.38	2092013.19
PIPE END #1	8" DIP	185219.59	2090773.02
PIPE END #2	4" DIP	185207.74	2090885.82
PIPE END #3	4" DIP	184709.92	2090453.14
PIPE END #4	8" DIP	184764.73	2090400.81
MITERED END #1	8" DIP	184103.16	2091194.55

STRUCTURE	PIPE SIZE	NORTHING	EASTING
INLET #1	15" RCP	185230.35	2090741.02
INLET #2	12"x18" ERCP	185089.86	2090893.40
INLET #3	15" RCP	184807.22	2090388.41
INLET #4	36" RCP	184766.96	2090326.23
INLET #5	12" RCP	184563.36	2090536.92
INLET #6	12" RCP	184346.79	2090794.42
INLET #7	12" RCP	184012.07	2091195.65
FES #30	12" RCP	184296.62	2090739.77
FES #31	12" RCP	184264.73	2090891.78
FES #32	12" RCP	184246.44	2090913.53
FES #33	12" RCP	184069.19	2091126.31
FES #34	12" RCP	184050.90	2091148.05
FES #35	12" RCP	183960.74	2091123.62
SDMH #4	29"x45" ERCP	184725.64	2090375.06

NOTES

1. SEE SHEETS CG-101 – CG-106 FOR DETAILED GRADING INFORMATION
2. ALL EXCESS MATERIAL MUST REMAIN WITHIN THE FOOTPRINT OF THE RANGE REGARDLESS OF THE SUITABILITY OF THE MATERIAL.
3. REFER TO SCDOT STD DETAILS AS INDICATED ON CG-101 TO CG-106.
4. ALL WORK WITHIN THE 50' CULTURAL RESTRICTED AREA BUFFER MUST BE MONITORED BY THE DEPOT ARCHAEOLOGIST AT ALL TIMES. NOTIFY CONTRACTING OFFICER AT LEAST 7 DAYS IN ADVANCED WHEN WORKING IN THIS AREA.
5. PROVIDE SOIL CONDITIONERS FOR SOIL PH REQUIREMENTS AS SPECIFIED.
6. REFER TO CG-107 THRU CG-109 FOR TREE PROTECTION.
7. REFER TO CG-101 THRU CG-106 FOR STORMDRAIN STRUCTURE LOCATIONS AND REFERENCE NUMBERS INDICATED ON THE STORMDRAIN STRUCTURE LOCATION TABLE.
8. SEGREGATE EXCAVATED MATERIALS AS SPECIFIED IN 31 23 00.20
9. REFER TO CS-300 SERIES AND C-002 DRAWINGS FOR PRELOADING REQUIREMENTS. PRELOAD 10' WIDE CENTER ROAD TO TOE OF FIRING BERMS.

KEY NOTES

1. SETTLEMENT PLATE (TYP OF 6)

N

100' 50' 0 100' 200'
1"=100'

SYM	DESCRIPTION	DATE	APPR
1	REVISED ROAD WIDTH	8/16/16	

NAVFAC

NORTH CAROLINA PROFESSIONAL ENGINEER SEAL 037630 JAMES ALLEN M. JAMISON

Aug 13 2016 10:32 AM
SEAL

CATLIN Engineers and Scientists
220 Old Dairy Road
Wilmington, NC 28405
Corporate Licensure No. for Engineering Services C-0585
A/E INFO

APPROVED
FOR COMMANDER NAVFAC
ACTIVITY
SATISFACTORY TO DATE
DES JAR DRW JAR CHK GJ
PM/DM EH
BRANCH MANAGER NY
CHIEF ENG/ARCH
FIRE PROTECTION

DEPARTMENT OF THE NAVY
NAVAL FACILITIES ENGINEERING COMMAND
ATLANTIC DIV NORTH CAROLINA
NAVAL FACILITIES ENGINEERING COMMAND – MIDATLANTIC
LAFAYETTE COMPLEX, NORFOLK, VIRGINIA
U.S. MARINE CORPS RECRUIT DEPOT
PARRIS ISLAND, SC
RANGE SAFETY IMPROVEMENTS & MODERNIZATION
OVERALL SITE GRADING AND DRAINAGE PLAN

SCALE: 1"=100'
EPROJECT NO.: 1354718
CONSTR. CONTR. NO.
NAVFAC DRAWING NO.
12723913
SHEET 48 OF 213
CG-100

DRAWFORM REVISION: 10 MARCH 2009

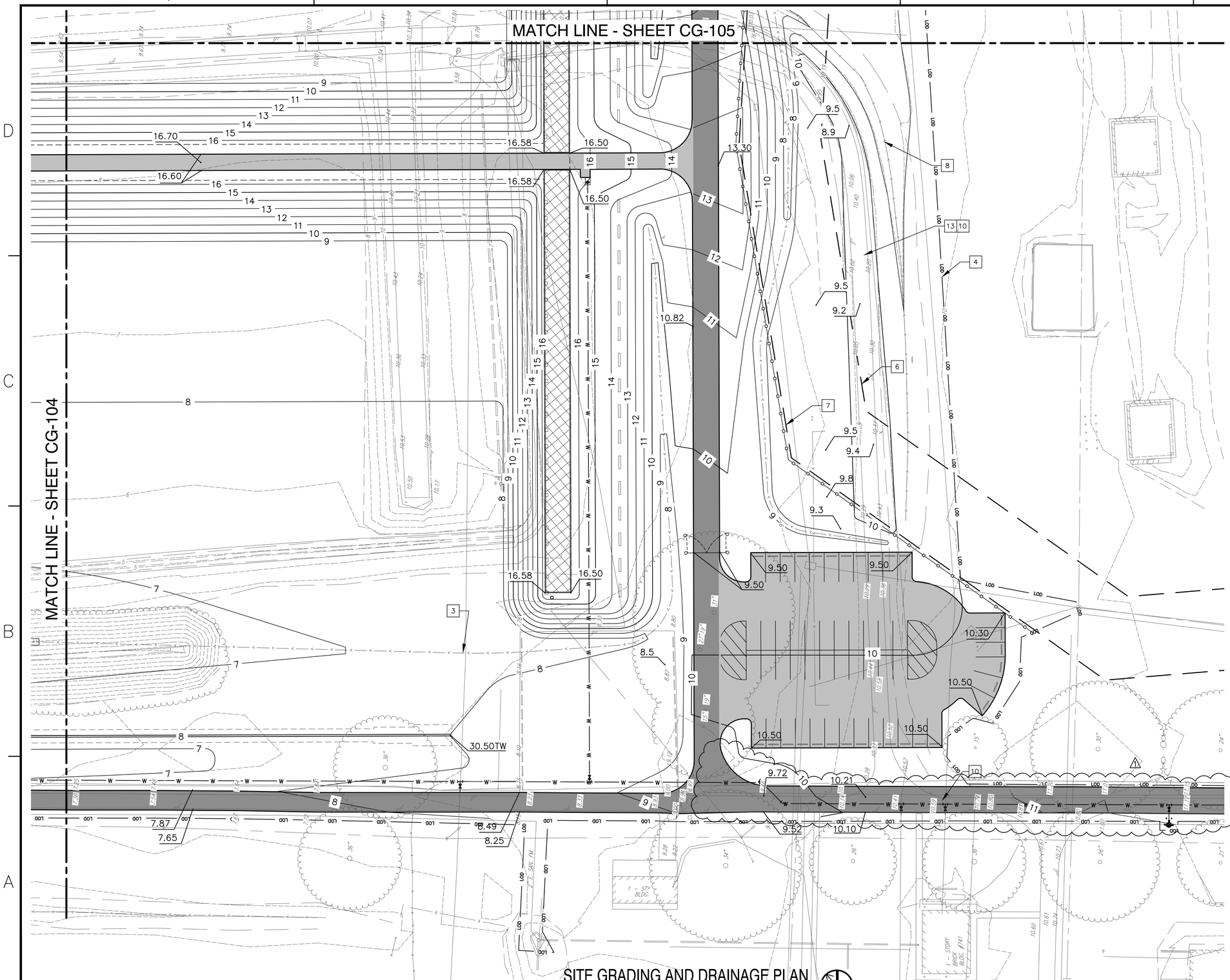

SITE GRADING AND DRAINAGE PLAN

1"=30'

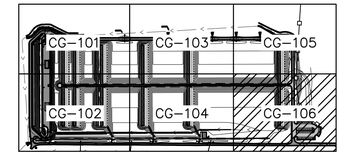

KEY PLAN

NOT TO SCALE

KEY NOTES

1. BLDG/WALL FOUNDATION DRAIN OUTFALL. SEE STRUCTURAL DWGS FOR CONTINUATION.
2. LINED SWALES – A4/CS-514
3. GRASS SWALE – B3/CS-514
4. LIMITS OF DISTURBANCE
5. WETLAND LINE
6. CULTURAL RESTRICTED AREA
7. CULTURAL RESTRICTED AREA 50' BUFFER
8. EXIST DITCH
9. RIP-RAP ENERGY DISSIPATER – A1/CS-504
10. MATCH EXIST GRADE
11. TRANSITION FROM LINED TO GRASS SWALE
12. REMOVE END WALL AND EXIST 36" RCP
13. FILL DEMOLISHED ROAD TO MAINTAIN EXIST DRAINAGE PATTERNS
14. PIPE PENETRATION. SEE STRUCTURAL DWGS
15. DRAINAGE ACCESS MH HD INLET ADAPTOR FOR 6' X 6' BOX – SCDOT 719-505-02
16. DROP INLET (24" X 24") INLET ADAPTOR FOR 6' X 6' BOX – SCDOT 719-105-02
17. DROP INLET (24" X 24") – SCDOT 719-105-01
18. CONCRETE ENDWALL – B2/CS-504
19. TIDEFLEX SERIES 35-1 OR APPROVED EQUAL
20. DROP INLET (24" x 24") ADAPTOR FOR 4' X 4' BOX – SCDOT 719-105-02
21. TRANSITION FROM PVC FOUNDATION DRAIN TO DIP

NOTES

1. REFER TO STORMDRAIN STRUCTURE LOCATION TABLE ON CG-100 FOR COORDINATES OF NUMBERED STORMDRAIN STRUCTURE.
2. THE LENGTHS OF PIPE INDICATED INCLUDE ANY END TREATMENTS (FES, ENDWALL, ETC.), REFER TO DETAIL FOR DIMENSIONS AND REFERENCED COORDINATE POINT LOCATION.
3. ALL ELEVATIONS INDICATED ON HARDSCAPE ARE EDGE OF PAVEMENT OR CURB TOP. SEE C1, C2, A4/CS-514 , A5/CS-516 AND D1/LA-103 ADDITIONAL INFORMATION FOR FINISHED GRADE ADJACENT HARDSCAPE.

30' 15' 0 30' 60'

1"=30'

SYM	DESCRIPTION	DATE	APPR
1	REVSED ROAD WIDTH	8/16/16	

NAVFAC

NORTH CAROLINA PROFESSIONAL ENGINEER SEAL 037630 ALLEN M. JAMISON

Aug 13 2016 10:32 AM

CATLIN Engineers and Scientists
220 Old Dairy Road
Wilmington, NC 28405
Corporate Licensure No. for Engineering Services C-0585

A/E INFO

APPROVED

FOR COMMANDER NAVFAC ACTIVITY

SATISFACTORY TO DATE

DES JAR DRW JAR CHK GJ

PM/DM EH

BRANCH MANAGER NY

CHIEF ENG/ARCH

FIRE PROTECTION

DEPARTMENT OF THE NAVY
NAVAL FACILITIES ENGINEERING COMMAND
PT NORTH CAROLINA

NAVAL FACILITIES ENGINEERING COMMAND – MIDATLANTIC
LAFAYETTE COMPLEX, NORFOLK, VIRGINIA

U.S. MARINE CORPS RECRUIT DEPOT
PARRIS ISLAND, SC

RANGE SAFETY IMPROVEMENTS & MODERNIZATION

SITE GRADING AND DRAINAGE PLAN

SCALE: 1"=30'

EPROJECT NO.: 1354718

CONSTR. CONTR. NO.

NAVFAC DRAWING NO.
12723919

SHEET 54 OF 213

CG-106

DRAWFORM REVISION: 10 MARCH 2009

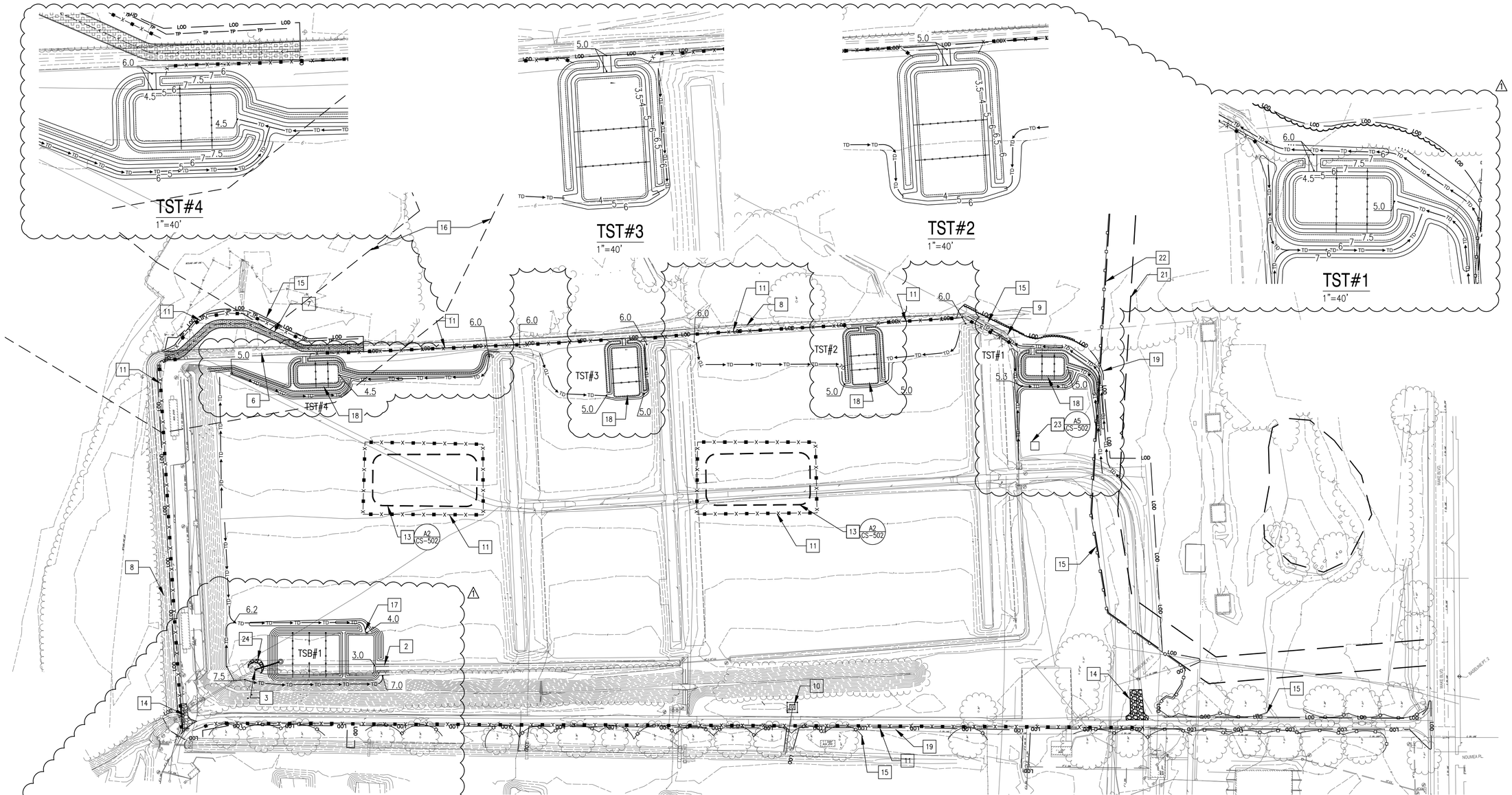

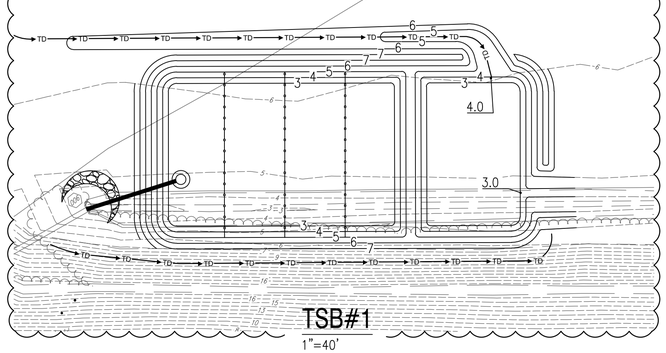

KEY NOTES

1. NOT USED
2. EXIST LINED SWALE TO SEDIMENT BASIN. DEMOLISH AS REQUIRED FOR TSB#1
3. CONNECT SEDIMENT BASIN PRIMARY SPILLWAY TIE TO EXIST STORM PIPE
4. NOT USED
5. NOT USED
6. DEMOLISH EXIST LINED SWALE
7. PROPOSED LINED SWALE (CLEAN WATER)
8. EXIST LINED SWALE (CLEAN WATER)
9. DIVERSION DIKE TIED TO EXIST DITCH (CLEAN WATER)
10. INLET PROTECTION
11. SILT FENCE
12. PEDESTRIAN TUNNEL
13. TEMPORARY STOCKPILE
14. TEMPORARY CONSTRUCTION ENTRANCE
15. TREE PROTECTION
16. UXO 4A BOUNDARY
17. TEMPORARY SEDIMENT BASIN
18. TEMPORARY SEDIMENT TRAP
19. MAINTAIN EXISTING TURF 10' OUTSIDE THE LOD, TYP FOR EAST AND SOUTH LOD LIMITS. NOT REQUIRED ALONG LINED SWALE TO THE NORTH AND WEST LOD LIMITS
20. LOD BOUNDARY
21. CULTURAL SENSITIVE AREA
22. CULTURAL SENSITIVE AREA 50' BUFFER
23. CONCRETE WASHOUT
24. ROCK SEDIMENT DIKE

LEGEND

- DRY SEDIMENT BASIN – B4/CS-506
- SEDIMENT TRAP – A4/CS-505
- ROCK SEDIMENT DIKE – C3/CS-507
- TEMPORARY CONSTRUCTION ENTRANCE – C3/CS-508
- INLET PROTECTION – A3/CS-503
- DIVERSION DIKE OR BERM – C3/CS-509
- SILT FENCE – A2/CS-501
- TREE PROTECTION FENCE – B5/CS-501
- POROUS BAFFLES – A2/CS-505
- LIMITS OF DISTURBANCE

1"=100' 100' 50' 0 100' 200'

SYM	DESCRIPTION	DATE	APPR
1	GRADING & CONCRETE WASHOUT	8/16/16	

NAVFAC

NORTH CAROLINA PROFESSIONAL ENGINEER SEAL 037630 ALLEN M. JAMISON

Aug 13 2016 10:32 AM
SEAL

CATLIN Engineers and Scientists
220 Old Dairy Road
Wilmington, NC 28405
Corporate Licensure No. for Engineering Services C-0585
A/E INFO

APPROVED
FOR COMMANDER NAVFAC
ACTIVITY
SATISFACTORY TO DATE

DES	DRW	CHK
JAR	JAR	GJ

PM/DM: EH
BRANCH MANAGER: NY
CHIEF ENG/ARCH
FIRE PROTECTION

DEPARTMENT OF THE NAVY
NAVAL FACILITIES ENGINEERING COMMAND
NAVAL FACILITIES ENGINEERING COMMAND – MIDATLANTIC
LAFAYETTE COMPLEX, NORFOLK, VIRGINIA
BY NORTH CAROLINA
U.S. MARINE CORPS RECRUIT DEPOT
PARRIS ISLAND, SC
RANGE SAFETY IMPROVEMENTS & MODERNIZATION
STORMWATER POLLUTION PREVENTION PLAN PHASE I

SCALE: SEE PLAN
EPROJECT NO.: 1354718
CONSTR. CONTR. NO.
NAVFAC DRAWING NO. 12723920
SHEET 55 OF 213
CG-107

DRAWFORM REVISION: 10 MARCH 2009

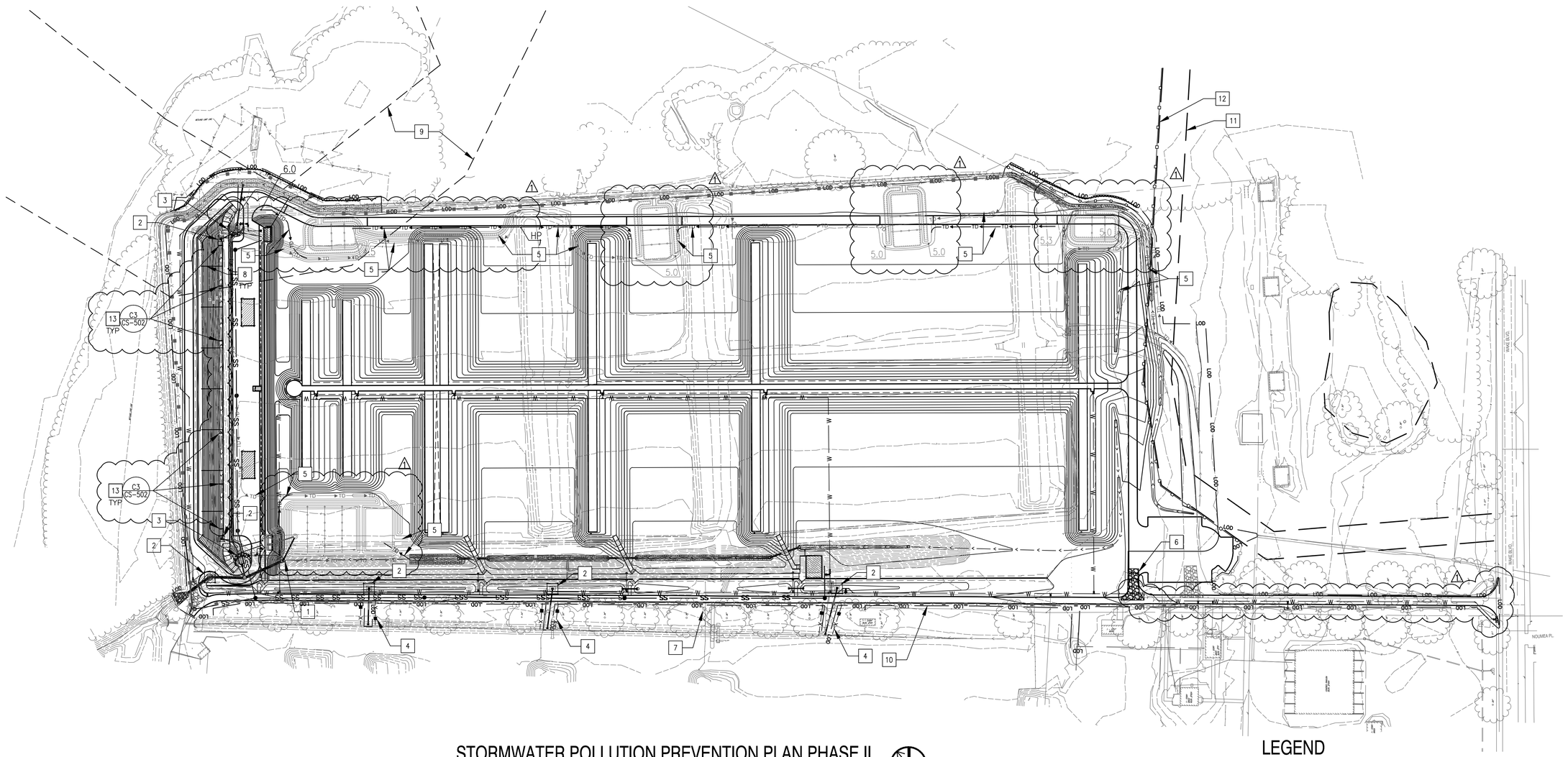

STORMWATER POLLUTION PREVENTION PLAN PHASE II

1"=100'

KEY NOTES

1. CONNECT SEDIMENT BASIN PRIMARY SPILLWAY TO PROPOSED STORM SEWER
2. INLET PROTECTION
3. ROCK SEDIMENT DIKE
4. SILT FENCE
5. RELOCATE TEMP DIVERSION DITCHES AS PROPOSED GRADES ARE OBTAINED AND EXISTING BERMS ARE RELOCATED. ALL DISTURBED AREAS MUST DRAIN TO THE TEMP SEDIMENT BASIN/TRAPS AT ALL TIME DURING CONSTRUCTION
6. TEMPORARY CONSTRUCTION ENTRANCE
7. TREE PROTECTION
8. PIPE SLOPE DRAIN – SPACE EVERY 100' AND PIPE TO INLET – A3/CS-509
9. UXO 4A BOUNDARY
10. LOD BOUNDARY
11. CULTURAL SENSITIVE AREA
12. CULTURAL SENSITIVE AREA 50' BUFFER
13. SEDIMENT TUBES

LEGEND

PROPOSED	PREVIOUS PHASE	
		DRY SEDIMENT BASIN – B4/CS-506
		SEDIMENT TRAP – A4/CS-505
		ROCK SEDIMENT DIKE – C3/CS-507
		TEMPORARY CONSTRUCTION – C3/CS-508 ENTRANCE
		INLET PROTECTION – A3/CS-503
TD	TD	DIVERSION DIKE OR BERM – C3/CS-509
X	X	SILT FENCE – A2/CS-501
		TREE PROTECTION FENCE – B5/CS-501
		POROUS BAFFLES – A2/CS-505
LOD	LOD	LIMITS OF DISTURBANCE

1"=100' 100' 50' 0 100' 200'

SYM	DESCRIPTION	DATE	APPR
1	ROAD TUBES, LOD & GRADING	8/16/16	

NAVFAC

NORTH CAROLINA PROFESSIONAL ENGINEER SEAL 03763 GALEN M. JAMISON

Aug 13 2016 10:32 AM

SEAL

CATLIN Engineers and Scientists
220 Old Dairy Road
Wilmington, NC 28405
Corporate Licensure No. for Engineering Services C-0585

A/E INFO

APPROVED

FOR COMMANDER NAVFAC

ACTIVITY

SATISFACTORY TO DATE

DES JAR DRW JAR CHK GJ

PM/DM EH

BRANCH MANAGER NY

CHIEF ENG/ARCH

FIRE PROTECTION

DEPARTMENT OF THE NAVY
NAVAL FACILITIES ENGINEERING COMMAND
NAVAL FACILITIES ENGINEERING COMMAND ~ MIDATLANTIC
IPT NORTH CAROLINA LAFAYETTE COMPLEX, NORFOLK, VIRGINIA

U.S. MARINE CORPS RECRUIT DEPOT PARRIS ISLAND, SC

RANGE SAFETY IMPROVEMENTS & MODERNIZATION

STORMWATER POLLUTION PREVENTION PLAN PHASE II

SCALE: SEE PLAN

EPROJECT NO.: 1354718

CONSTR. CONTR. NO.

NAVFAC DRAWING NO. 12723921

SHEET 56 OF 213

CG-108

DRAWFORM REVISION: 10 MARCH 2009

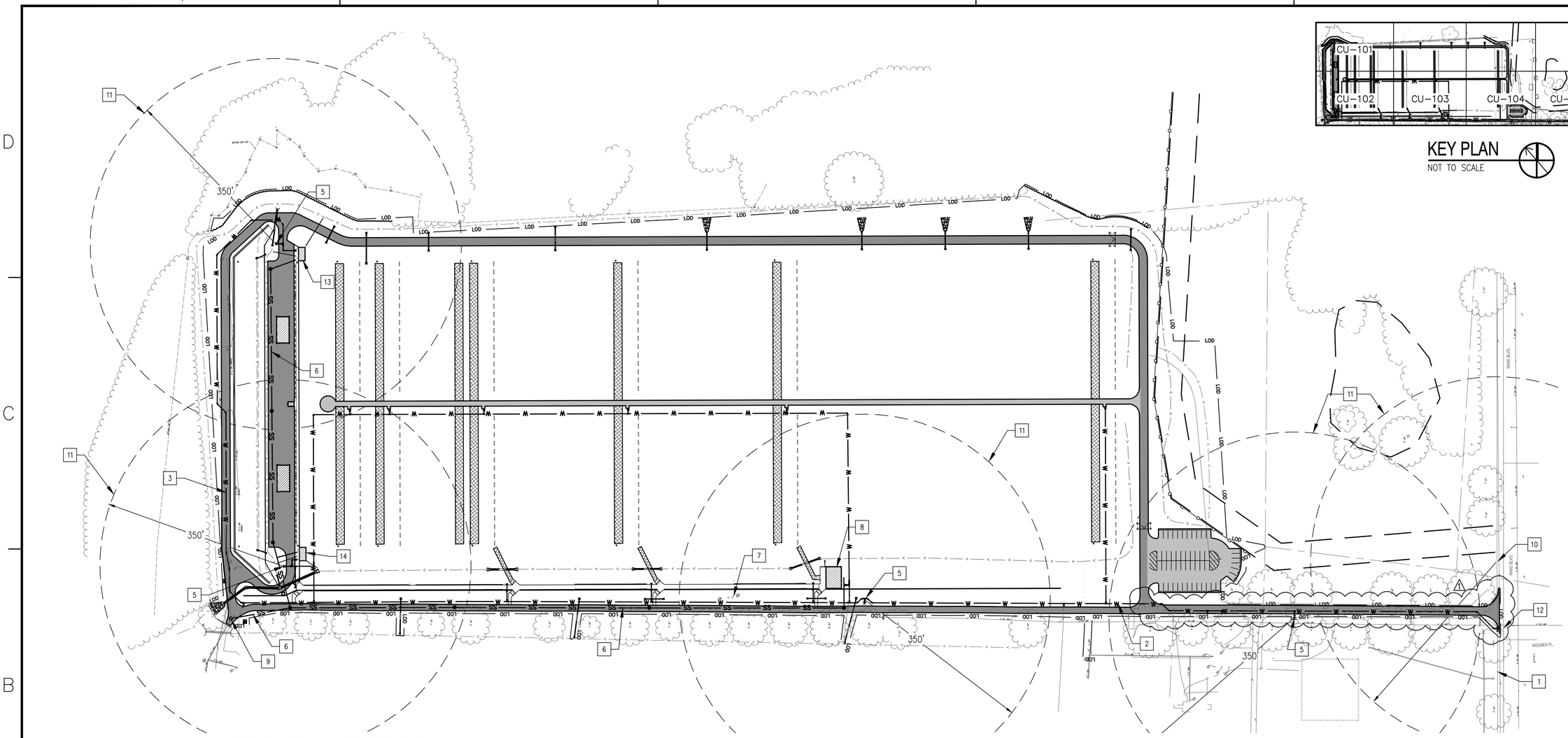

WATER UTLILTY LAYOUT DATA TABLE

COORDINATES			COORDINATES		
POINTS	NORTHING	EASTING	POINTS	NORTHING	EASTING
1	FIELD VERIFY		23	185283.59	2090687.70
2	183461.87	2091813.03	24	185291.83	2090779.59
3	183614.93	2091631.87	25	185258.59	2090819.37
4	183633.07	2091630.34	26	185247.32	2090820.38
5	183701.36	2091549.51	27	185219.10	2090796.85
6	183986.46	2091212.06	28	185227.63	2090786.62
7	183997.59	2091211.13	29	185209.18	2090788.58
8	184001.18	2091206.88	30	184715.83	2090450.12
9	184004.83	2091202.56	31	184738.23	2090423.29
10	184004.09	2091191.20	32	184742.21	2090418.52
11	184013.70	2091179.82	33	184752.14	2090406.62
12	184057.66	2091127.80	34	184751.75	2090426.48
13	184254.72	2090894.55	35	184935.55	2090633.31
14	184430.54	2090686.45	36	184891.52	2090686.08
15	184663.42	2090406.42	37	184843.47	2090743.67
16	184748.13	2090304.22	38	184729.39	2090880.41
17	184750.84	2090300.96	39	184555.20	2091089.21
18	184781.77	2090298.07	40	184363.02	2091319.57
19	184814.76	2090325.41	41	184289.97	2091407.13
20	184840.82	2090339.61	42	184039.49	2091201.04
21	185044.60	2090509.54	43	183195.10	2092079.54
22	185067.45	2090507.47	44	183239.88	2092075.78

OVERALL SITE UTILITY PLAN

1"=100'

KEY NOTES

1. 12" EXIST WATER LINE
2. 8" DIP WATER LINE
3. 6" DIP WATER LINE
4. 2" HDPE WATER LINE
5. FIRE HYDRANT
6. 8" GRAVITY SANITARY SEWER
7. EXIST PUMP STATION TO BE REMOVED SEE DWG CD-104
8. 300 YARD MALE AND FEMALE HEAD
9. EXIST SANITARY SEWER MANHOLE
10. EXIST FIRE HYDRANT
11. HYDRANT COVERAGE
12. EXIST 8" WATER LINE
13. MALE HEAD
14. FEMALE HEAD

NOTES

1. ALL WATER AND SANITARY SEWER INFRASTRUCTURE HAVE BEEN PRIVATIZED AND ARE OWNED/OPERATED BY BJWSA. COORDINATE THE CONSTRUCTION AND INSPECTION OF WATER AND SANITARY SEWER SERVICE AT THE DEMARC POINT WITH BJWSA.
2. MAINTAIN EXISTING WATER SERVICE AND PROVIDE WATER SERVICE ALONG STARLIGHT ACCESS ROAD SERVING OFF SITE FACILITIES THROUGHOUT THE DURATION OF THE PROJECT. COORDINATE TEMPORARY UTILITY OUTAGES AS SPECIFIED.
3. REFER TO CG-107 THRU CG-109 FOR TREE PROTECTION.
4. REFER TO CS-401 THRU CS-403 FOR SANITARY SEWER PROFILE
5. REFER TO CS-404 THRU CS-406 FOR 8" WATER PROFILE
6. REFER TO CU-101 THRU CU-105 UTILITY LAYOUT DATA TABLE REFERENCE NUMBER LOCATIONS
7. REFER TO ELEC DRAWINGS FOR ADDITION INFORMATION
8. CONTACT TIMOTHY ANDREPONT AT 843.987.9295 OR TIMOTHYA@BJWSA.ORG TO SCHEDULE A PRE-CONSTRUCTION CONFERENCE PRIOR TO BEGINNING WORK ON THE WATER AND SANITARY SEWER SYSTEM. ANY REVISIONS TO THE DRAWINGS MUST BE RECEIVED 48 HOURS PRIOR TO PRE-CON.

1

N

100' 50' 0 100' 200'
1"=100'

SYM	DESCRIPTION	DATE	APPR
1	REV. ROAD WIDTH AND NOTE	8/16/16	

NAVFAC

NORTH CAROLINA PROFESSIONAL ENGINEER SEAL 037630 JOSEPH ALLEN JAMISON
Aug 13 2016 10:32 AM
SEAL

CATLIN Engineers and Scientists
220 Old Dairy Road
Wilmington, NC 28405
Corporate Licensure No. for Engineering Services C-0585
A/E INFO

APPROVED
FOR COMMANDER NAVFAC
ACTIVITY
SATISFACTORY TO DATE

DES	JAR	DRW	JAR	CHK	GJ
PM/DM	EH				
BRANCH MANAGER	NY				
CHIEF ENG/ARCH					
FIRE PROTECTION					

DEPARTMENT OF THE NAVY
NAVAL FACILITIES ENGINEERING COMMAND ~ MIDATLANTIC
PT NORTH CAROLINA
NAVAL FACILITIES ENGINEERING COMMAND
LAFAYETTE COMPLEX NORFOLK, VIRGINIA
U.S. MARINE CORPS RECRUIT DEPOT
PARRIS ISLAND, SC
RANGE SAFETY IMPROVEMENTS & MODERNIZATION
OVERALL SITE UTILITY PLAN

SCALE: 1"=100'
EPROJECT NO.: 1354718
CONSTR. CONTR. NO.
NAVFAC DRAWING NO. 12723923
SHEET 58 OF 213
CU-100

DRAWFORM REVISION: 10 MARCH 2009

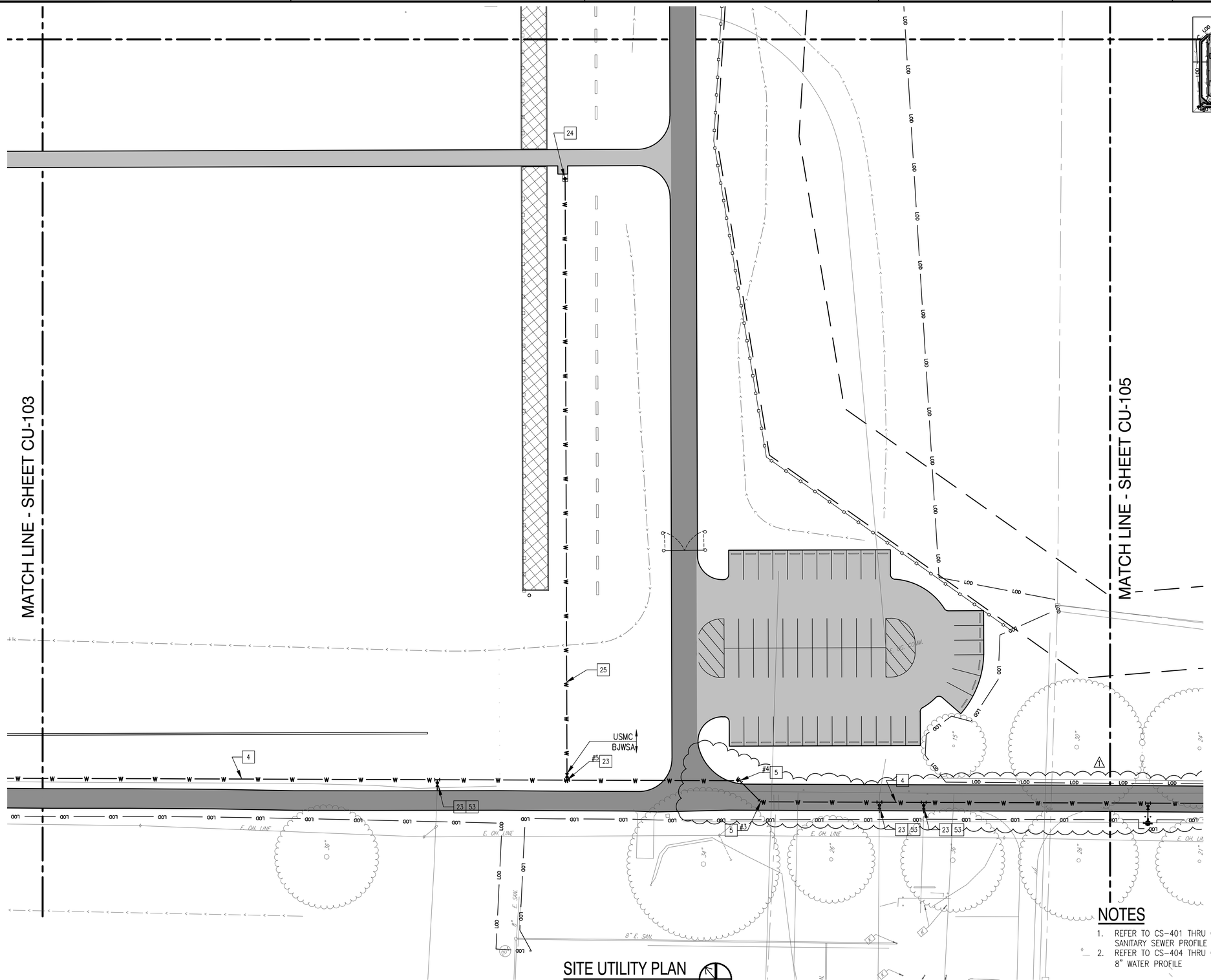

SITE UTILITY PLAN
1"=30'

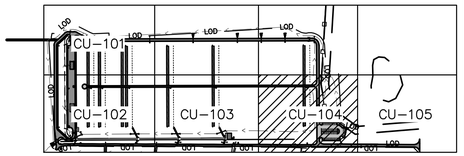

KEY PLAN
NOT TO SCALE

KEY NOTES

1. 12" EXIST WATER LINE
2. 12"x12"x8" DIP TEE
3. 8" STANDARD VALVE – C2/CS-511
4. 8" DIP WATER LINE – C4/CS-510
5. 8" DIP 45° BEND
6. 8"x6" DIP REDUCER
7. 8"x8"x8" DIP TEE
8. 8"x8"x6" DIP TEE
9. 8"x8"x4" DIP TEE
10. FIRE HYDRANT ASSEMBLY – A2/CS-513
11. 6" DIP WATER LINE – C4/CS-510
12. 6" STANDARD VALVE – C2/CS-511
13. 4" STANDARD VALVE – C2/CS-511
14. 6" DIP 45° BEND
15. 6" DIP 11.25° BEND
16. 6"x6"x6" DIP TEE
17. 6"x4" DIP REDUCER
18. 4"x4"x4" DIP TEE
19. 4"X3" DIP REDUCER (DIP TO HDPE)
20. 4"x2" DIP REDUCER (DIP TO HDPE)
21. 4" DIP WATER LINE – C4/CS-510
22. 3" HDPE WATER LINE – C4/CS-510
23. 2" CONNECTION – C4/CS-511
24. YARD HYDRANT – C5/CS-513
25. 2" HDPE WATER LINE DETAIL C4/CS-510
26. 2" STANDARD VALVE – C2/CS-511
27. 2" 90° BEND
28. 2" TEE
29. DIP TO HDPE TRANSITION FITTING
30. 3" CONNECTION TO EXIST WATER LINE
31. M (MALE HEAD) F (FEMALE HEAD)
32. 2" BACK FLOW PREVENTER AND VAULT – A2/CS-511
33. 6" DIP SEWER SERVICE LATERAL – C2/CS-513
34. 8" PVC GRAVITY SANITARY SEWER LINE – A4/CS-511
35. 8" DIP GRAVITY SANITARY SEWER LINE – A4/CS-511
36. STANDARD SANITARY SEWER MANHOLE – A4/CS-512
37. FLATTOP SANITARY SEWER MANHOLE – A2/CS-512
38. EXIST SANITARY SEWER MANHOLE CORE DRILL FOR NEW 8" LINE AND PLUG EXIST 8" HOLE.
39. DEMARC LOCATION. SEE PLUMBING DWGS FOR CONTINUATION
40. EXIST FIRE HYDRANT
41. GRAVITY MAIN CROSSING – C2/CS-512
42. TRANSFORMER PAD REFER TO ELEC DWGS.
43. REFER TO STRUCTURAL DRAWINGS FOR WALL PENETRATION – A5/S-314
44. SAW CUT ASPHALT PAVEMENT
45. EXIST PUMP STATION TO BE REMOVED SEE DWG CD-104
46. SEWER SERVICE CONNECTION – C2/CS-513
47. 2" 45° BEND
48. WET UTILITY CROSSING – C2/CS-510
49. REFER TO STRUCTURAL DRAWINGS FOR UTILITIES UNDER FOUNDATIONS – C4/S-316
50. 12" STANDARD VALVE – C2/CS-511
51. CONNECT TO EXIST PAVEMENT
52. 6" PLUG w/ 2" THREADED TAP
53. FIELD VERIFY EXIST PIPE SIZE

NOTES

1. REFER TO CS-401 THRU CS-403 FOR SANITARY SEWER PROFILE
2. REFER TO CS-404 THRU CS-406 FOR 8" WATER PROFILE

30' 15' 0 30' 60'
1"=30'

SYM	DESCRIPTION	DATE	APPR
1	REVISED ROAD WIDTH	8/16/16	

NAVFAC

NORTH CAROLINA PROFESSIONAL ENGINEER SEAL 03763 GALEN M. JAMISON
Aug 13 2016 10:33 AM
SEAL

CATLIN
Engineers and Scientists
220 Old Dairy Road
Wilmington, NC 28405
Corporate Licensure No. for Engineering Services C-0585
A/E INFO

APPROVED
FOR COMMANDER NAVFAC
ACTIVITY
SATISFACTORY TO DATE
DES JAR DRW JAR CHK GJ
PM/DM EH
BRANCH MANAGER NY
CHIEF ENG/ARCH
FIRE PROTECTION

DEPARTMENT OF THE NAVY
NAVAL FACILITIES ENGINEERING COMMAND
IPT NORTH CAROLINA
NAVAL FACILITIES ENGINEERING COMMAND ~ MIDATLANTIC
LAFAYETTE COMPLEX, NORFOLK, VIRGINIA
U.S. MARINE CORPS RECRUIT DEPOT
PARRIS ISLAND, SC
RANGE SAFETY IMPROVEMENTS & MODERNIZATION
SITE UTILITY PLAN

SCALE: 1"=30'
EPROJECT NO.: 1354718
CONSTR. CONTR. NO.
NAVFAC DRAWING NO. 12723927
SHEET 62 OF 213
CU-104
DRAWFORM REVISION: 10 MARCH 2009

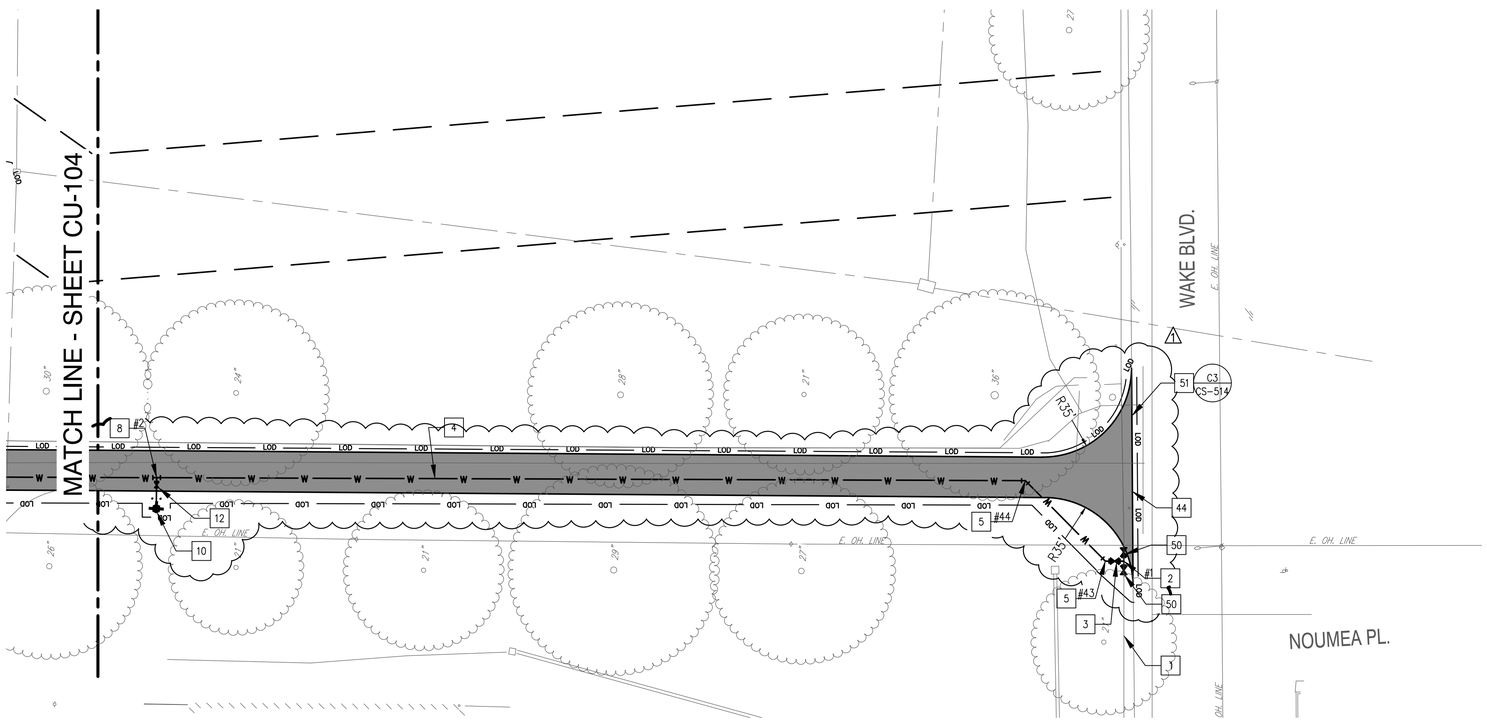

SITE UTILITY PLAN

1"=30'

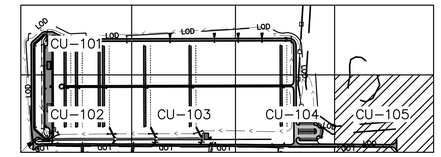

KEY PLAN

NOT TO SCALE

KEY NOTES

1. 12" EXIST WATER LINE
2. 12"x12"x8" DIP TEE
3. 8" STANDARD VALVE – C2/CS-511
4. 8" DIP WATER LINE – C4/CS-510
5. 8" DIP 45° BEND
6. 8"x6" DIP REDUCER
7. 8"x8"x8" DIP TEE
8. 8"x8"x6" DIP TEE
9. 8"x8"x4" DIP TEE
10. FIRE HYDRANT ASSEMBLY – A2/CS-513
11. 6" DIP WATER LINE – C4/CS-510
12. 6" STANDARD VALVE – C2/CS-511
13. 4" STANDARD VALVE – C2/CS-511
14. 6" DIP 45° BEND
15. 6" DIP 11.25° BEND
16. 6"x6"x6" DIP TEE
17. 6"x4" DIP REDUCER
18. 4"x4"x4" DIP TEE
19. 4"X3" DIP REDUCER (DIP TO HDPE)
20. 4"x2" DIP REDUCER (DIP TO HDPE)
21. 4" DIP WATER LINE – C4/CS-510
22. 3" HDPE WATER LINE – C4/CS-510
23. 2" CONNECTION – C4/CS-511
24. YARD HYDRANT – C5/CS-513
25. 2" HDPE WATER LINE DETAIL C4/CS-510
26. 2" STANDARD VALVE – C2/CS-511
27. 2" 90° BEND
28. 2" TEE
29. DIP TO HDPE TRANSITION FITTING
30. 3" CONNECTION TO EXIST WATER LINE
31. M (MALE HEAD) F (FEMALE HEAD)
32. 2" BACK FLOW PREVENTER AND VAULT – A2/CS-511
33. 6" DIP SEWER SERVICE LATERAL – C2/CS-513
34. 8" PVC GRAVITY SANITARY SEWER LINE – A4/CS-511
35. 8" DIP GRAVITY SANITARY SEWER LINE – A4/CS-511
36. STANDARD SANITARY SEWER MANHOLE – A4/CS-512
37. FLATTOP SANITARY SEWER MANHOLE – A2/CS-512
38. EXIST SANITARY SEWER MANHOLE CORE DRILL FOR NEW 8" LINE AND PLUG EXIST 8" HOLE.
39. DEMARC LOCATION. SEE PLUMBING DWGS FOR CONTINUATION
40. EXIST FIRE HYDRANT
41. GRAVITY MAIN CROSSING – C2/CS-512
42. TRANSFORMER PAD REFER TO ELEC DWGS.
43. REFER TO STRUCTURAL DRAWINGS FOR WALL PENETRATION – A5/S-314
44. SAW CUT ASPHALT PAVEMENT
45. EXIST PUMP STATION TO BE REMOVED SEE DWG CD-104
46. SEWER SERVICE CONNECTION – C2/CS-513
47. 2" 45° BEND
48. WET UTILITY CROSSING – C2/CS-510
49. REFER TO STRUCTURAL DRAWINGS FOR UTILITIES UNDER FOUNDATIONS – C4/S-316
50. 12" STANDARD VALVE – C2/CS-511
51. CONNECT TO EXIST PAVEMENT
52. 6" PLUG w/ 2" THREADED TAP
53. FIELD VERIFY EXIST PIPE SIZE

NOTES

1. REFER TO CS-401 THRU CS-403 FOR SANITARY SEWER PROFILE
2. REFER TO CS-404 THRU CS-406 FOR 8" WATER PROFILE

30' 15' 0 30' 60'

1"=30'

SYM	DESCRIPTION	DATE	APPR
1	REVISED ROAD WIDTH	8/16/16	

NAVFAC

NORTH CAROLINA PROFESSIONAL ENGINEER SEAL 03763 GALEN M. JAMISON

Aug 13 2016 10:33 AM

SEAL

CATLIN Engineers and Scientists

220 Old Dairy Road
Wilmington, NC 28405

Corporate Licensure No. for Engineering Services C-0585

A/E INFO

APPROVED

FOR COMMANDER NAVFAC

ACTIVITY

SATISFACTORY TO DATE

DES	JAR	DRW	JAR	CHK	GJ

PM/DM EH

BRANCH MANAGER NY

CHIEF ENG/ARCH

FIRE PROTECTION

DEPARTMENT OF THE NAVY
NAVAL FACILITIES ENGINEERING COMMAND
NAVAL FACILITIES ENGINEERING COMMAND – MIDATLANTIC
IPT NORTH CAROLINA
LAFAYETTE COMPLEX, NORFOLK, VIRGINIA

U.S. MARINE CORPS RECRUIT DEPOT
PARRIS ISLAND, SC

RANGE SAFETY IMPROVEMENTS & MODERNIZATION

SITE UTILITY PLAN

SCALE: 1"=30'

EPROJECT NO.: 1354718

CONSTR. CONTR. NO.

NAVFAC DRAWING NO. 12723928

SHEET 63 OF 213

CU-105

DRAWFORM REVISION: 10 MARCH 2009

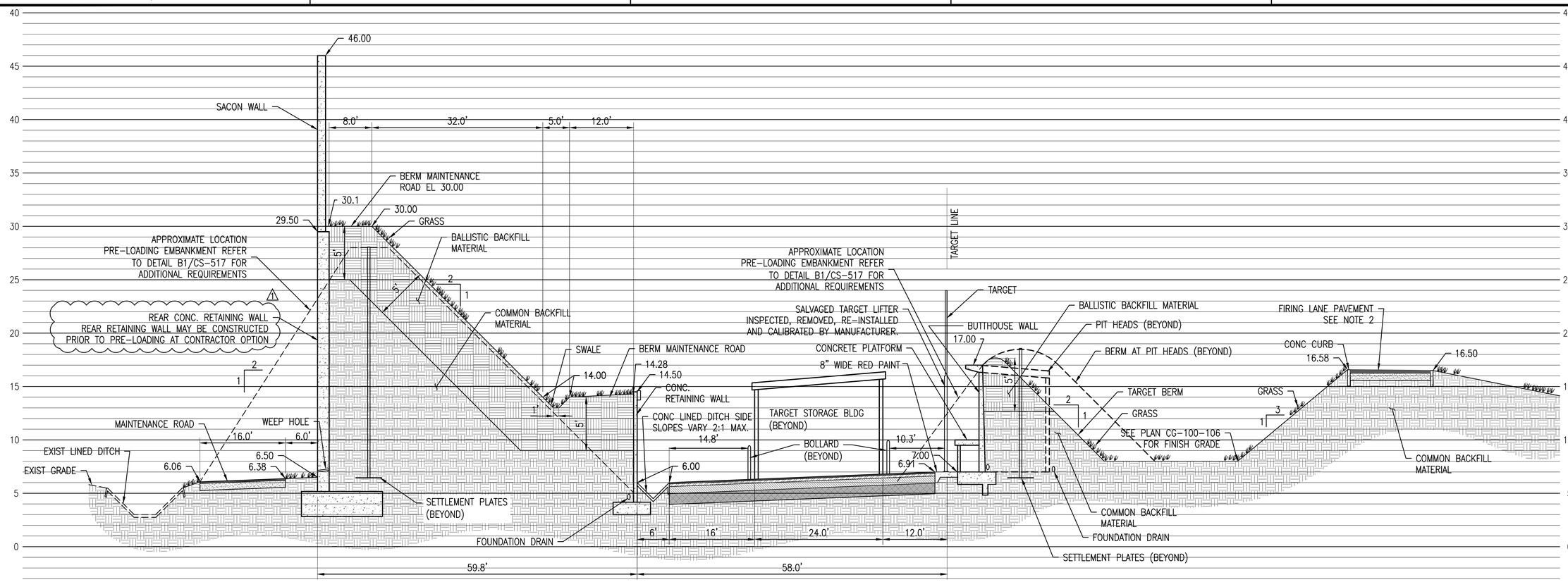

SECTION "A"

HORZ: 1"=10'
VERT: 1"=5'

CG-100 (A) CS-300

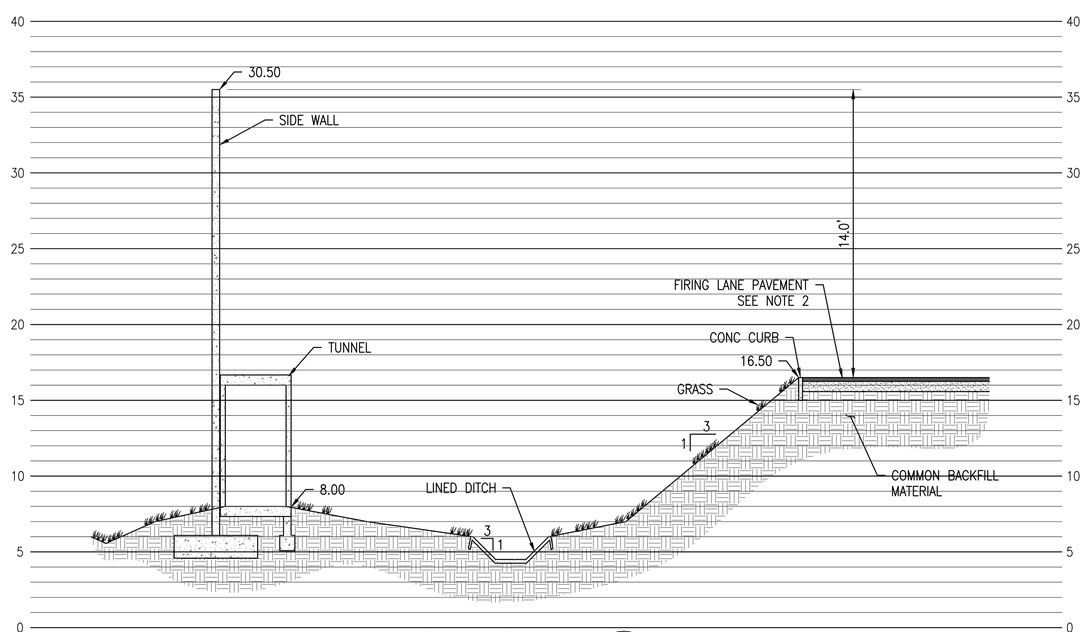

SECTION "C"

HORZ: 1"=10'
VERT: 1"=5'

CG-100 (C) CS-300

NOTES

1. REFER TO ARCHITECTURAL AND STRUCTURAL DRAWINGS FOR ADDITIONAL RETAINING WALLS, TUNNEL, SIDE WALL AND BUILDINGS INFORMATION AND DETAILS.
2. FOLLOWING PLACEMENT OF THE PLANNED AGGREGATE BASE COURSE, PROVIDE 0.25' OF ADDITIONAL AGGREGATE BASE TO ACCOUNT FOR ANTICIPATED SETTLEMENT DURING CONSTRUCTION. THIS ADDITIONAL MATERIAL WILL REMAIN FOR A MINIMUM OF 60 DAYS AND AS DETERMINED BY CONTRACTING OFFICER. FOLLOWING THE SPECIFIED SETTLEMENT PERIOD, THE BASE COURSE WILL BE RE-GRADED TO THE PLANNED PAVEMENT AND/OR FIRING LINE SUBGRADE ELEVATION AND RECOMPACTED. ANY SURPLUS AGGREGATE BASE MATERIAL REMOVED DURING RE-GRADING OPERATIONS WILL BE SALVAGED AND REUSED IN OTHER PORTIONS OF THE SITE.

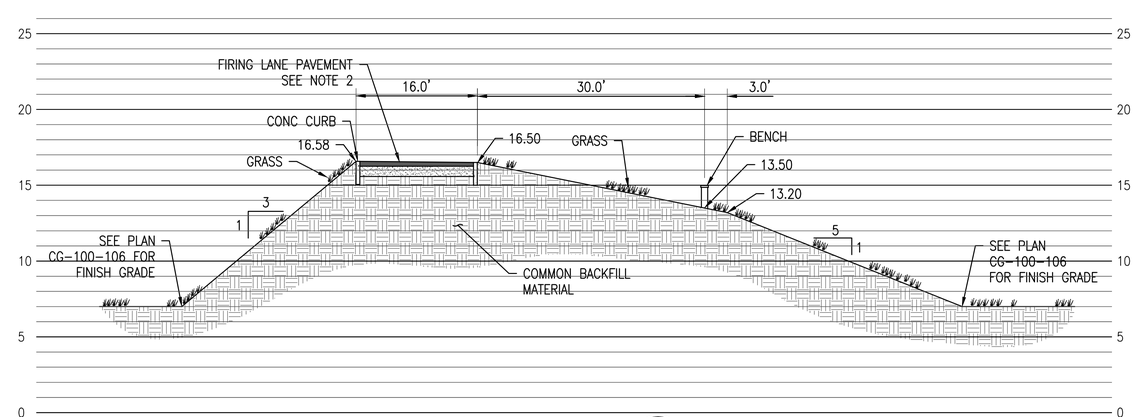

SECTION "B"

HORZ: 1"=10'
VERT: 1"=5'

CG-100 (B) CS-300

1"=10' 10' 5' 0 10' 20'

STM	DESCRIPTION	DATE	APPR
1	REVISED NOTE	8/16/16	

NAVFAC

NORTH CAROLINA PROFESSIONAL ENGINEER SEAL 037630 JAMES ALLEN M. JAMISON

Aug 13 2016 10:33 AM

CATLIN Engineers and Scientists
220 Old Dairy Road
Wilmington, NC 28405
Corporate Licensure No. for Engineering Services C-0585

A/E INFO

APPROVED

FOR COMMANDER NAVFAC

ACTIVITY

SATISFACTORY TO DATE

DES JAR DRW JAR CHK GJ

PM/DM EH

BRANCH MANAGER NY

CHIEF ENG/ARCH

FIRE PROTECTION

DEPARTMENT OF THE NAVY
NAVAL FACILITIES ENGINEERING COMMAND
IPT NORTH CAROLINA
NAVAL FACILITIES ENGINEERING COMMAND – MIDATLANTIC
LAFAYETTE COMPLEX, NORFOLK, VIRGINIA
U.S. MARINE CORPS RECRUIT DEPOT
PARRIS ISLAND, SC

RANGE SAFETY IMPROVEMENTS & MODERNIZATION

SECTIONS

SCALE: SEE PLAN

EPROJECT NO.: 1354718

CONSTR. CONTR. NO.

NAVFAC DRAWING NO.
12723929

SHEET 64 OF 213

CS-300

DRAWFORM REVISION: 10 MARCH 2009

SWPPP AND CERTIFICATION STATEMENT

"I HAVE PLACED MY SIGNATURE AND SEAL ON THE DESIGN DOCUMENTS SUBMITTED SIGNIFYING THAT I ACCEPT RESPONSIBILITY FOR THE DESIGN OF THE SYSTEM. FURTHER, I CERTIFY TO THE BEST OF MY KNOWLEDGE AND BELIEF THAT THE DESIGN IS CONSISTENT WITH THE REQUIREMENTS OF TITLE 48, CHAPTER 14 OF THE CODE OF LAWS OF SC, 1976 AS AMENDED, PURSUANT TO REGULATION 72-300 ET SEQ. (IF APPLICABLE), AND IN ACCORDANCE WITH THE TERMS AND CONDITIONS OF SCR100000."

NAME ______________

TITLE ______________

DATE ______________

NORTH CAROLINA PROFESSIONAL ENGINEER SEAL 037631 GALEN M. JAMISON

Aug 13 2016 10:35 AM

SWPPP GENERAL NOTES

1. IF NECESSARY, SLOPES, WHICH EXCEED EIGHT (8) VERTICAL FEET SHOULD BE STABILIZED WITH SYNTHETIC OR VEGETATIVE MATS, IN ADDITION TO HYDROSEEDING. IT MAY BE NECESSARY TO INSTALL TEMPORARY SLOPE DRAINS DURING CONSTRUCTION. TEMPORARY BERMS MAY BE NEEDED UNTIL THE SLOPE IS BROUGHT TO GRADE. STABILIZATION MEASURES SHALL BE INITIATED AS SOON AS PRACTICABLE IN PORTIONS OF THE SITE WHERE CONSTRUCTION ACTIVITIES HAVE TEMPORARILY OR PERMANENTLY CEASED, BUT IN NO CASE MORE THAN FOURTEEN (14) DAYS AFTER WORK HAS CEASED, EXCEPT AS STATED BELOW.
   A. WHERE STABILIZATION BY THE 14TH DAY IS PRECLUDED BY SNOW COVER OR FROZEN GROUND CONDITIONS STABILIZATION MEASURES MUST BE INITIATED AS SOON AS PRACTICABLE.
   B. WHERE CONSTRUCTION ACTIVITY ON A PORTION OF THE SITE IS TEMPORARILY CEASED, AND EARTH-DISTURBING ACTIVITIES WILL BE RESUMED WITHIN 14 DAYS, TEMPORARY STABILIZATION MEASURES DO NOT HAVE TO BE INITIATED ON THAT PORTION OF THE SITE.
2. ALL SEDIMENT AND EROSION CONTROL DEVICES SHALL BE INSPECTED ONCE EVERY CALENDAR WEEK. IF PERIODIC INSPECTION OR OTHER INFORMATION INDICATES THAT A BMP HAS BEEN INAPPROPRIATELY OR INCORRECTLY INSTALLED, THE PERMITTEE MUST ADDRESS THE NECESSARY REPLACEMENT OR MODIFICATION REQUIRED TO CORRECT THE BMP WITHIN 48 HOURS OF IDENTIFICATION.
3. PROVIDE SILT FENCE AND/OR OTHER CONTROL DEVICES, AS MAY BE REQUIRED, TO CONTROL SOIL EROSION DURING UTILITY CONSTRUCTION. ALL DISTURBED AREAS SHALL BE CLEANED, GRADED, AND STABILIZED WITH GRASSING IMMEDIATELY AFTER THE UTILITY INSTALLATION. FILL, COVER, AND TEMPORARY SEEDING AT THE END OF EACH DAY ARE RECOMMENDED. IF WATER IS ENCOUNTERED WHILE TRENCHING, THE WATER SHOULD BE FILTERED TO REMOVE SEDIMENT BEFORE BEING PUMPED BACK INTO ANY WATERS OF THE STATE.
4. ALL EROSION CONTROL DEVICES SHALL BE PROPERLY MAINTAINED DURING ALL PHASES OF CONSTRUCTION UNTIL THE COMPLETION OF ALL CONSTRUCTION ACTIVITIES AND ALL DISTURBED AREAS HAVE BEEN STABILIZED. ADDITIONAL CONTROL DEVICES MAY BE REQUIRED DURING CONSTRUCTION IN ORDER TO CONTROL EROSION AND/OR OFFSITE SEDIMENTATION. ALL TEMPORARY CONTROL DEVICES SHALL BE REMOVED ONCE CONSTRUCTION IS COMPLETE AND THE SITE IS STABILIZED.
5. THE CONTRACTOR MUST TAKE NECESSARY ACTION TO MINIMIZE THE TRACKING OF MUD ONTO PAVED ROADWAY(S) FROM CONSTRUCTION AREAS AND THE GENERATION OF DUST. THE CONTRACTOR SHALL DAILY REMOVE MUD/SOIL FROM PAVEMENT, AS MAY BE REQUIRED.
6. RESIDENTIAL SUBDIVISIONS REQUIRE EROSION CONTROL FEATURES FOR INFRASTRUCTURE AS WELL AS FOR INDIVIDUAL LOT CONSTRUCTION. INDIVIDUAL PROPERTY OWNERS SHALL FOLLOW THESE PLANS DURING CONSTRUCTION OR OBTAIN APPROVAL OF AN INDIVIDUAL PLAN IN ACCORDANCE WITH S.C REG. 72-300 ET SEQ. AND SCR100000.
7. TEMPORARY DIVERSION BERMS AND/OR DITCHES WILL BE PROVIDED AS NEEDED DURING CONSTRUCTION TO PROTECT WORK AREAS FROM UPSLOPE RUNOFF AND/OR TO DIVERT SEDIMENT-LADEN WATER TO APPROPRIATE TRAPS OR STABLE OUTLETS.
8. ALL WATERS OF THE STATE (WOS), INCLUDING WETLANDS, ARE TO BE FLAGGED OR OTHERWISE CLEARLY MARKED IN THE FIELD. A DOUBLE ROW OF SILT FENCE IS TO BE INSTALLED IN ALL AREAS WHERE A 50-FOOT BUFFER CAN'T BE MAINTAINED BETWEEN THE DISTURBED AREA AND ALL WOS. A 10-FOOT BUFFER SHOULD BE MAINTAINED BETWEEN THE LAST ROW OF SILT FENCE AND ALL WOS.
9. LITTER, CONSTRUCTION DEBRIS, OILS, FUELS, AND BUILDING PRODUCTS WITH SIGNIFICANT POTENTIAL FOR IMPACT (SUCH AS STOCKPILES OF FRESHLY TREATED LUMBER) AND CONSTRUCTION CHEMICALS THAT COULD BE EXPOSED TO STORM WATER MUST BE PREVENTED FROM BECOMING A POLLUTANT SOURCE IN STORM WATER DISCHARGES.
10. A COPY OF THE SWPPP, INSPECTIONS RECORDS, AND RAINFALL DATA MUST BE RETAINED AT THE CONSTRUCTION SITE OR A NEARBY LOCATION EASILY ACCESSIBLE DURING ANY WORKING HOURS, FROM THE DATE OF COMMENCEMENT OF CONSTRUCTION ACTIVITIES TO THE DATE THAT FINAL STABILIZATION IS REACHED.
11. INITIATE STABILIZATION MEASURES ON ANY EXPOSED STEEP SLOPE (3H:1V OR GREATER) WHERE LAND-DISTURBING ACTIVITIES HAVE PERMANENTLY OR TEMPORARILY CEASED, AND WILL NOT RESUME FOR A PERIOD OF 7 CALENDAR DAYS.
12. MINIMIZE SOIL COMPACTION AND, UNLESS INFEASIBLE, PRESERVE TOPSOIL.
13. MINIMIZE THE DISCHARGE OF POLLUTANTS FROM EQUIPMENT AND VEHICLE WASHING, WHEEL WASH WATER, AND OTHER WASH WATERS. WASH WATERS MUST BE TREATED IN A SEDIMENT BASIN OR ALTERNATIVE CONTROL THAT PROVIDES EQUIVALENT OR BETTER TREATMENT PRIOR TO DISCHARGE;
14. MINIMIZE THE DISCHARGE OF POLLUTANTS FROM DEWATERING OF TRENCHES AND EXCAVATED AREAS. THESE DISCHARGES ARE TO BE ROUTED THROUGH APPROPRIATE BMPS (SEDIMENT BASIN, FILTER BAG, ETC.).
15. THE FOLLOWING DISCHARGES FROM SITES ARE PROHIBITED:
   A. WASTEWATER FROM WASHOUT OF CONCRETE, UNLESS MANAGED BY AN APPROPRIATE CONTROL;
   B. WASTEWATER FROM WASHOUT AND CLEANOUT OF STUCCO, PAINT, FORM RELEASE OILS, CURING COMPOUNDS AND OTHER CONSTRUCTION MATERIALS;
   C. FUELS, OILS, OR OTHER POLLUTANTS USED IN VEHICLE AND EQUIPMENT OPERATION AND MAINTENANCE; AND
   D. SOAPS OR SOLVENTS USED IN VEHICLE AND EQUIPMENT WASHING.
16. AFTER CONSTRUCTION ACTIVITIES BEGIN, INSPECTIONS MUST BE CONDUCTED AT A MINIMUM OF AT LEAST ONCE EVERY CALENDAR WEEK AND MUST BE CONDUCTED UNTIL FINAL STABILIZATION IS REACHED ON ALL AREAS OF THE CONSTRUCTION SITE.
17. IF EXISTING BMPS NEED TO BE MODIFIED OR IF ADDITIONAL BMPS ARE NECESSARY TO COMPLY WITH THE REQUIREMENTS OF THIS PERMIT AND/OR SC'S WATER QUALITY STANDARDS, IMPLEMENTATION MUST BE COMPLETED BEFORE THE NEXT STORM EVENT WHENEVER PRACTICABLE. IF IMPLEMENTATION BEFORE THE NEXT STORM EVENT IS IMPRACTICABLE, THE SITUATION MUST BE DOCUMENTED IN THE SWPPP AND ALTERNATIVE BMPS MUST BE IMPLEMENTED AS SOON AS REASONABLY POSSIBLE.
18. A PRE-CONSTRUCTION CONFERENCE MUST BE HELD FOR EACH CONSTRUCTION SITE WITH AN APPROVED ON-SITE SWPPP PRIOR TO THE IMPLEMENTATION OF CONSTRUCTION ACTIVITIES. FOR NON-LINEAR PROJECTS THAT DISTURB 10 ACRES OR MORE THIS CONFERENCE MUST BE HELD ON-SITE UNLESS THE DEPARTMENT HAS APPROVED OTHERWISE.

SEQUENCE OF CONSTRUCTION

△1

ITEMS MUST OCCUR IN THE ORDER LISTED; ITEMS CANNOT OCCUR CONCURRENTLY UNLESS SPECIFICALLY NOTED.

1. HOLD THE PRE-CONSTRUCTION MEETING.
2. NOTIFY DHEC EQC REGIONAL OFFICE OR OCRM OFFICE 48 HOURS PRIOR TO BEGINNING LAND DISTURBING ACTIVITIES.

PHASE 1

3. INSTALL CONSTRUCTION ENTRANCE.
4. CLEAR AND GRUB AS NECESSARY FOR THE INSTALLATION OF PERIMETER CONTROLS.
5. INSTALL PERIMETER CONTROLS (E.G. SILT FENCE, DIVERSION MEASURES, TREE PROTECTION, INLET PROTECTION ETC.) AS INDICATED IN THE PHASE 1 SWPPP DRAWINGS.
6. CLEAR AND GRUB AS NECESSARY FOR THE INSTALLATION OF BASINS/TRAPS.
7. INSTALL BASINS/TRAPS AND CONNECT DIVERSION MEASURES TO BASINS/TRAPS. BASINS/TRAPS MUST BE COMPLETELY INSTALLED AND OPERATIONAL PRIOR TO THE NEXT STEP.
8. BACKFILL EXCESS EARTH MATERIAL AS SPECIFIED IN LOCATIONS THAT DRAIN TO THE BASINS/TRAPS.
9. CONSTRUCT LINED SWALE WITHIN THE BOUNDARIES OF UXO4A AND THE LOD.
10. PERFORM REMAINING SITE DEMOLITION ACTIVITES.

PHASE 2

11. ROUGH GRADE THE SITE AS INDICATED IN THE PHASE 2 SWPPP DRAWINGS AND PRE-LOAD AREAS AS INDICATED.
12. INSTALL STORM DRAIN SYSTEM. INSTALL INLET PROTECTION AS EACH INLET BECOMES OPERATIONAL.
13. FINE GRADE THE SITE AND CONSTRUCT/INSTALL REMAINING EXTERIOR IMPROVEMENTS WITH THE EXCEPTION OF THE IMPACT BERM FLAG POLES. AS FINAL GRADES ARE REACHED, ALL DISTRIBUTED AREAS MUST DRAIN TO THE BASINS/TRAPS OR OTHER PERIMETER CONTROLS AT ALL TIMES DURING CONSTRUCTION.
14. PERFORM REMAINING PERMANENT/FINAL SITE STABILIZATION.
15. UPON ESTABLISHMENT OF THE NATURAL VEGETATIVE FILTERS BETWEEN THE FIRING BERMS, AND STABILIZATION OF ALL UPLAND DISTURBED AREAS DRAINING TO THE TRAPS/BASIN. OBTAIN APPROVAL FROM CONTRACTING OFFICER PRIOR TO THE REMOVAL OF THE BASINS/TRAPS AND TEMP DIVERSION DIKES.

PHASE 3

16. CLEANOUT BASINS/TRAPS PRIOR TO REMOVAL OF THE BASINS/TRAPS AND INSTALL ADDITIONAL EROSION AND SEDIMENT CONTROL MEASURES AS INDICATED IN THE PHASE 3 SWPPP DRAWINGS.
17. GRADE AND CONSTRUCT REMAINING EXTERIOR IMPROVEMENTS (E.G. CULVERTS, OUTLET PROTECTION, GRADING, PAVING, LINED SWALE, ETC.).
18. UPON APPROVAL FROM THE CONTRACTING OFFICER, REMOVE THE REMAINING TEMPORARY EROSION AND SEDIMENT CONTROL MEASURES AND PERFORM PERMANENT/FINAL GROUND STABILIZATION FOR PHASE 3 DISTURBED AREAS.
19. CLEAN ALL LINED SWALES WITH 3,000 PSI WATER FOR THE ENTIRE LENGTH. ALL SEDIMENT SHALL BE COLLECTED AND SPREAD ON SITE. WASH WATER SHALL BE DISCHARGED THROUGH AN APPROVED DEWATERING DEVICE SUCH AS A FILTER BAG. CONTRACTOR WILL SUBMIT AN ASSESSMENT REPORT OF ALL LINED SWALES WITHIN THE LOD. REPORT WILL INCLUDE PICTURES AND LOCATIONS OF ALL SUBSTANDARD LINES SWALES.
20. INSTALL IMPACT BERM FLAG POLES.
21. SUBMIT NOTICE OF TERMINATION TO THE CONTRACTING OFFICER.

SYM	DESCRIPTION	DATE	APPR
1	ADDED PHASES TO SEQUENCE	8/16/16	

NAVFAC

NORTH CAROLINA PROFESSIONAL ENGINEER SEAL 037631 GALEN M. JAMISON

Aug 13 2016 10:33 AM

SEAL

CATLIN Engineers and Scientists
220 Old Dairy Road
Wilmington, NC 28405
Corporate Licensure No. for Engineering Services C-0585

A/E INFO

APPROVED

FOR COMMANDER NAVFAC

ACTIVITY

SATISFACTORY TO DATE

DES JAR	DRW JAR	CHK GJ
PM/DM	EH	
BRANCH MANAGER	NY	
CHIEF ENG/ARCH		
FIRE PROTECTION		

DEPARTMENT OF THE NAVY NAVAL FACILITIES ENGINEERING COMMAND
NAVAL FACILITIES ENGINEERING COMMAND ~ MIDATLANTIC
IPT NORTH CAROLINA LAFAYETTE COMPLEX, NORFOLK, VIRGINIA
U.S. MARINE CORPS RECRUIT DEPOT PARRIS ISLAND, SC
RANGE SAFETY IMPROVEMENTS & MODERNIZATION
STORMWATER POLLUTION PREVENTION PLAN (SWPPP) NOTES

SCALE: SEE PLAN

EPROJECT NO.: 1354718

CONSTR. CONTR. NO.

NAVFAC DRAWING NO. 12723938

SHEET 73 OF 213

CS-500

DRAWFORM REVISION: 10 MARCH 2009

SEDIMENT TUBE INSTALLATION

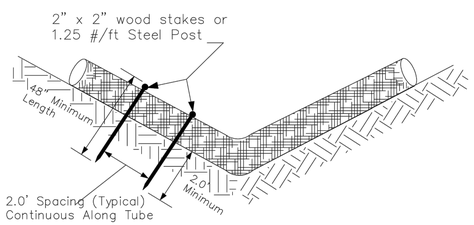

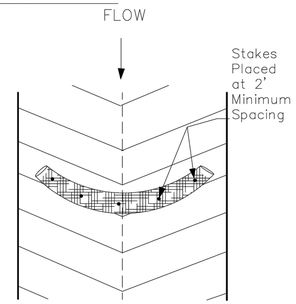

SEDIMENT TUBE SPACING

SLOPE	MAX. SEDIMENT TUBE SPACING
LESS THAN 2%	150-FEET
2%	100-FEET
3%	75-FEET
4%	50-FEET
5%	40-FEET
6%	30-FEET
GREATER THAN 6%	25-FEET

PLAN SYMBOL

South Carolina Department of Health and Environmental Control

SEDIMENT TUBES

STANDARD DRAWING NO. SC-05 PAGE 1 of 2

NOT TO SCALE FEBRUARY 2014 DATE

SEDIMENT TUBES – GENERAL NOTES

1. Sediment tubes may be installed along contours, in drainage conveyance channels, and around inlets to help prevent off-site discharge of sediment-laden stormwater runoff.
2. Sediment tubes are elongated tubes of compacted geotextiles, curled excelsior wood, natural coconut fiber, or hardwood mulch. Straw, pine needle, and leaf mulch-filled sediment tubes are not permitted.
3. The outer netting of the sediment tube should consist of seamless, high-density polyethylene photodegradable materials treated with ultraviolet stabilizers or a seamless, high-density polyethylene non-degradable material.
4. Sediment tubes, when used as checks within channels, should range between 18-inches and 24-inches depending on channel dimensions. Diameters outside this range may be allowed where necessary when approved.
5. Curled excelsior wood, or natural coconut products that are rolled up to create a sediment tube are not allowed.
6. Sediment tubes should be staked using wooden stakes (2-inch X 2-inch) or steel posts (standard "U" or "T" sections with a minimum weight of 1.25 pounds per foot) at a minimum of 48-inches in length placed on 2-foot centers.
7. Install all sediment tubes to ensure that no gaps exist between the soil and the bottom of the tube. Manufacturer's recommendations should always be consulted before installation.
8. The ends of adjacent sediment tubes should be overlapped 6-inches to prevent flow and sediment from passing through the field joint.
9. Sediment tubes should not be stacked on top of one another, unless recommended by manufacturer.
10. Each sediment tube should be installed in a trench with a depth equal to 1/5 the diameter of the sediment tube.
11. Sediment tubes should continue up the side slopes a minimum of 1-foot above the design flow depth of the channel.
12. Install stakes at a diagonal facing incoming runoff.

SEDIMENT TUBES – INSPECTION & MAINTENANCE

1. The key to functional sediment tubes is weekly inspections, routine maintenance, and regular sediment removal.
2. Regular inspections of sediment tubes shall be conducted once every calendar week and, as recommended, within 24-hours after each rainfall even that produces 1/2-inch or more of precipitation.
3. Attention to sediment accumulations in front of the sediment tube is extremely important. Accumulated sediment should be continually monitored and removed when necessary.
4. Remove accumulated sediment when it reaches 1/3 the height of the sediment tube.
5. Removed sediment shall be placed in stockpile storage areas or spread thinly across disturbed area. Stabilize the removed sediment after it is relocated.
6. Large debris, trash, and leaves should be removed from in front of tubes when found.
7. If erosion causes the edges to fall to a height equal to or below the height of the sediment tube, repairs should be made immediately to prevent runoff from bypassing tube.
8. Sediment tubes should be removed after the contributing drainage area has been completely stabilized. Permanent vegetation should replace areas from which sediment tubes have been removed.

South Carolina Department of Health and Environmental Control

SEDIMENT TUBES

STANDARD DRAWING NO. SC-05 PAGE 2 of 2

GENERAL NOTES FEBRUARY 2014 DATE

SEDIMENT TUBES

NOT TO SCALE

CG-108 C3

TEMPORARY STOCKPILE AREA

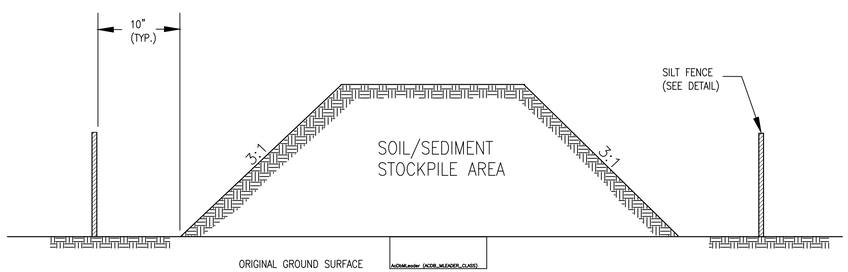

NOTES:

1. SILT FENCE TO EXTEND AROUND ENTIRE PERIMETER OF STOCKPILE, OR IF STOCKPILE AREA IS LOCATED ON/NEAR A SLOP THE SILT FENCE IS TO EXTEND ALONG CONTOURS OF THE DOWN-GRADIENT AREA.
2. IF STOCKPILE IS TO REMAIN FOR MORE THAN 14 DAYS, TEMPORARY STABILIZATION MEASURES MUST BE IMPLEMENTED.
3. SILT FENCE SHALL BE MAINTAINED UNTIL STOCKPILE AREA HAS EITHER BEEN REMOVED OR PERMANENTLY STABILIZED.
4. THE KEY TO FUNCTIONAL TEMPORARY STOCKPILE AREAS IS WEEKLY INSPECTIONS, ROUTINE MAINTENANCE, AND REGULAR SEDIMENT REMOVAL.

South Carolina Department of Health and Environmental Control

TEMPORARY STOCKPILE

STANDARD DRAWING NO. SC-15 PAGE 1 of 1

NOT TO SCALE FEBRUARY 2014 DATE

TEMPORARY STOCKPILE

NOT TO SCALE

CG-107 A2

STRAW BALE BARRIER CONCRETE WASHOUT

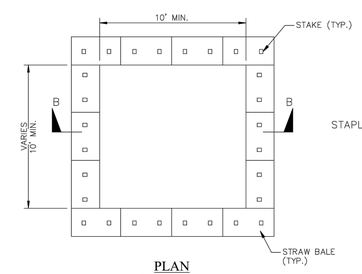

PLAN
TYPE "ABOVE GRADE" WITH STRAW BALES

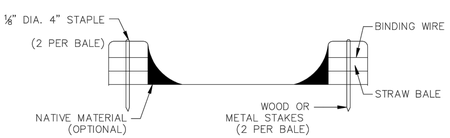

SECTION B-B

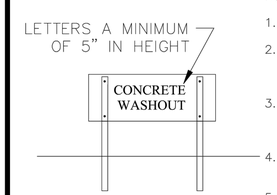

CONCRETE WASHOUT SIGN DETAIL

NOTES:

1. ACTUAL LAYOUT DETERMINED IN FIELD.
2. INSTALL CONCRETE WASHOUT SIGN (24"X24", MINIMUM) WITHIN 30' OF THE TEMPORARY CONCRETE WASHOUT FACILITY.
3. TEMPORARY WASHOUT AREA MUST BE AT LEAST 50' FROM A STORM DRAIN, CREEK BANK OR PERIMETER CONTROL.
4. CLEAN OUT CONCRETE WASHOUT AREA WHEN 50% FULL.
5. THE KEY TO FUNCTIONAL CONCRETE WASHOUTS IS WEEKLY INSPECTIONS, ROUTINE MAINTENANCE, AND REGULAR CLEAN OUT.
6. SILT FENCE SHALL BE INSTALLED AROUND PERIMETER OF CONCRETE WASHOUT AREA EXCEPT FOR THE SIDE UTILIZED FOR ACCESSING THE WASHOUT.
7. A ROCK CONSTRUCTION ENTRANCE MAY BE NECESSARY ALONG ONE SIDE OF THE WASHOUT TO PROVIDE VEHICLE ACCESS.

South Carolina Department of Health and Environmental Control

CONCRETE WASHOUT

STRAW BALES OR ABOVE GROUND

STANDARD DRAWING NO. RC-07 PAGE 1 of 1

NOT TO SCALE FEBRUARY 2014 DATE

CONCRETE WASHOUT

NOT TO SCALE

CG-107 A5

SYM	DESCRIPTION	DATE	APPR
1	ADDED DETAILS A2 AND C3	8/16/16	

NAVFAC

NORTH CAROLINA PROFESSIONAL ENGINEER SEAL 037630 ALLEN M. JAMISON

Aug 13 2016 10:33 AM

SEAL

CATLIN Engineers and Scientists
220 Old Dairy Road
Wilmington, NC 28405
Corporate Licensure No. for Engineering Services C-0585

A/E INFO

APPROVED

FOR COMMANDER NAVFAC

ACTIVITY

SATISFACTORY TO DATE

DES JAR DRW JAR CHK GJ

PM/DM EH

BRANCH MANAGER NY

CHIEF ENG/ARCH

FIRE PROTECTION

DEPARTMENT OF THE NAVY
NAVAL FACILITIES ENGINEERING COMMAND
IPT NORTH CAROLINA

NAVAL FACILITIES ENGINEERING COMMAND ~ MIDATLANTIC
LAFAYETTE COMPLEX, NORFOLK, VIRGINIA

U.S. MARINE CORPS RECRUIT DEPOT PARRIS ISLAND, SC

RANGE SAFETY IMPROVEMENTS & MODERNIZATION

SWPPP DETAILS

SCALE: SEE PLAN

EPROJECT NO.: 1354718

CONSTR. CONTR. NO.

NAVFAC DRAWING NO.
12723940

SHEET 75 OF 213

CS-502

DRAWFORM REVISION: 10 MARCH 2009

BAFFLES – POST REQUIREMENTS

1. Porous baffle posts must be 60–inch to 96–inch long steel posts that meet, at a minimum, the following physical characteristics.
   - Composed of a high strength steel with a minimum yield strength of 50,000 psi.
   - Include a standard "T" section with a nominal face width of 1.38–inches and a nominal "T" length of 1.48–inches.
   - Weigh 1.25 pounds per foot (± 8%)
2. Posts shall be equipped with projections to aid in fastening of baffle material.
3. Install posts to a minimum of 24–inches. A minimum height of 1– to 2–inches above the fabric shall be maintained, and a maximum height of 3 feet shall be maintained above the ground.
4. Post spacing shall be at a maximum of 4–feet on center.

BAFFLES – MATERIAL REQUIREMENTS

1. Baffle material must be composed of coir–based materials or Turf Reinforcement Matting (TRM) that consists of the following requirements:
   - Have a light penetration (% openings) between 10–35%;
   - Free of loose straw material;
   - Have a minimum tensile strength of 145 lb/ft; and,
   - Have a minimum width of 48–inches.
2. 12–inches of the fabric should be placed within excavated trench and toed in when the trench is backfilled or baffle material may be stapled into ground by using 12–inch staples with a maximum spacing of 12–inches.
3. Baffle material shall be purchased in continuous rolls and cut to the width of the sediment basin or trap to avoid joints.

BAFFLES – GENERAL NOTES

1. Attach baffle to the steel posts using heavy–duty plastic ties that are evenly spaced along the above ground portion of each post.
2. Install the baffle rows perpendicular to the direction of the stormwater flow and place each baffle the proper distance from inlet and outlets to allow access for maintenance and clean–out.

BAFFLES – INSPECTION & MAINTENANCE

1. The key to functional porous baffles is weekly inspection, routine maintenance, and regular sediment removal.
2. Regular inspections of porous baffles shall be conducted once every calendar week and, as recommended, within 24–hours after each rainfall even that produces 1/2–inch or more of precipitation.
3. Attention to sediment accumulations along each row of baffles is extremely important. Accumulated sediment should be continually monitored and removed when necessary.
4. Remove accumulated sediment when it reaches 1/3 the height of the baffle row or when it reaches the clean–out height of the sediment basin or trap, whichever is reached first.
5. Removed sediment shall be placed in stockpile storage areas or spread thinly across disturbed area. Stabilize the removed sediment after it is relocated.
6. Check for areas where stormwater runoff has eroded a channel beneath each row of baffles, or where the baffle has sagged or collapsed due to runoff overtopping the baffle.
7. Check for tears/rips within the baffles, areas where the baffle has begun to decompose, and for any other circumstance that may render the baffle ineffective. Removed damaged baffles and reinstall new baffles immediately.
8. Porous baffles should be removed within 30 days after final stabilization is achieved and once it is removed, the resulting disturbed area shall be permanently stabilized.

South Carolina Department of Health and Environmental Control

POROUS BAFFLES

STANDARD DRAWING NO. SC–13 PAGE 2 of 2

GENERAL NOTES FEBRUARY 2014 DATE

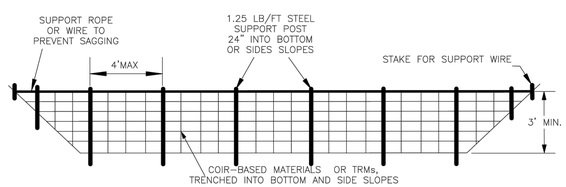

CROSS SECTION VIEW

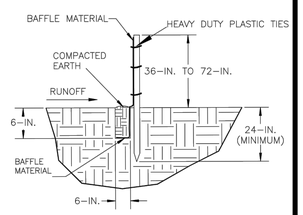

FLAT-BOTTOM TRENCH DETAIL

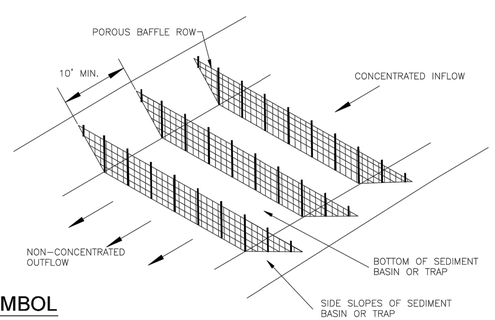

PERSPECTIVE VIEW

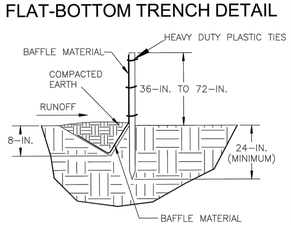

V-SHAPED TRENCH DETAIL

PLAN SYMBOL

South Carolina Department of Health and Environmental Control

POROUS BAFFLES

STANDARD DRAWING NO. SC–13 PAGE 1 of 2

NOT TO SCALE FEBRUARY 2014 DATE

PORUOUS BAFFLES

NOT TO SCALE CG–107 (A2)

SEDIMENT TRAP – GENERAL NOTES

1. Sediment traps should not be placed in Waters of the State or USGS blue–line streams (unless approved by Federal Authorities).
2. The rock outlet structure shall consist of 12–inch D50 riprap. The upstream face of this outlet shall consist of a 1–foot thick layer of 1–inch D50 washed stone. The maximum steepness of the rock outlet structure shall be 2:1.
3. Both the rock outlet and the stone apron shall have an underlying layer of non–woven geotextile filter fabric.
4. All internal side slopes of the sediment trap should be 3:1 or flatter.
5. A sediment cleanout stake should be installed and marked to remove sediment at 50% of the sediment storage volume.
6. At least two (2) porous baffles shall be installed within the sediment trap. There should be at least 10 linear feet between each baffle and between any row of baffles and any of the sediment trap's inlets/outlets.
7. After construction of each sediment trap, the area disturbed to construct the trap should be promptly stabilized, including all side slopes.
8. The following sediment trap requirements shall be maintained:
   - Maximum embankment height shall be 5–feet.
   - Maximum riprap outlet height shall be 3.5–feet.
   - Minimum width at bottom of riprap outlet shall be 3–feet.
   - Minimum flow length at top of riprap outlet shall be 2–feet.

SEDIMENT TRAP – INSPECTION AND MAINTENANCE

1. The key to a functional sediment trap is weekly inspections, routine maintenance and regular sediment removal.
2. Attention to sediment accumulations within the trap is extremely important. Accumulated sediment deposition should be continually monitored in the trap and removed when necessary.
3. Remove accumulated sediment when it reaches 50% of the designed sediment storage volume as marked by the cleanout stake.
4. Removed sediment from the trap shall be placed in stockpile storage areas or spread thinly across the disturbed area. Stabilize the removed sediment after it is relocated.
5. Regular inspections of sediment traps should be conducted once every calendar week and, as recommended, within 24–hours after each rainfall event that produces ½–inch or more of precipitation.
6. Disturbed areas resulting from the removal of the sediment trap should be permanently stabilized and additional BMPs, such as silt fence, should be utilized to handle stormwater runoff from this disturbed area until final stabilization is reached.

South Carolina Department of Health and Environmental Control

SEDIMENT TRAP

STANDARD DRAWING NO. SC–02 Page 2 of 2

GENERAL NOTES FEBRUARY 2014 DATE

SEDIMENT TRAP PLAN VIEW

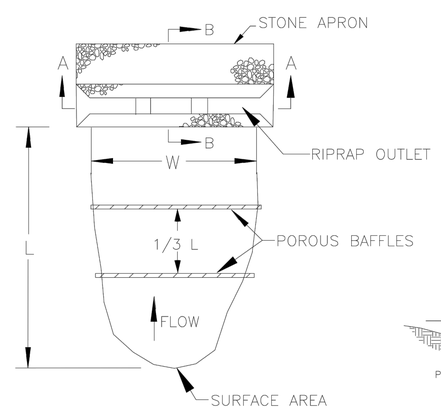

SECTION A - A

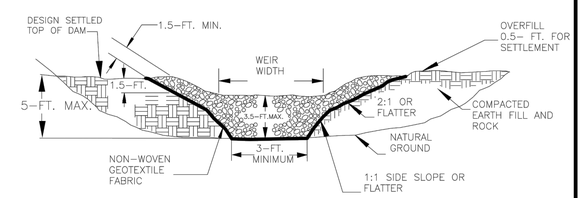

SECTION B - B

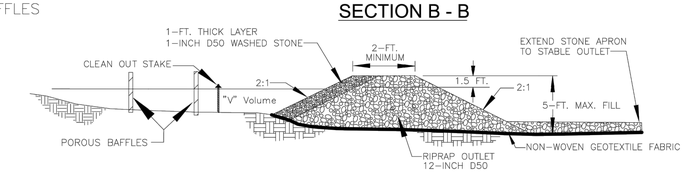

PLAN SYMBOL

DIMENSIONS

Trap#	Volume Provided (CF)	Top Width, FT	Embankment Height, FT	Wier Width, FT	Side Slopes	Bottom Width, FT	Bottom Length, FT
TST#1	4498	2	2.75	6	3:1	41	82
TST#2	8018	2	3	6	3:1	50	100
TST#3	7115	2	3	6	3:1	47	94
TST#4	8018	2	3	6	3:1	50	100

South Carolina Department of Health and Environmental Control

SEDIMENT TRAP

STANDARD DRAWING NO. SC–02 Page 1 of 2

NOT TO SCALE FEBRUARY 2014 DATE

SEDIMENT TRAP

NOT TO SCALE GC–107 (A4)

SYM	DESCRIPTION	DATE	APPR
1	REVISED TABLE IN DETAIL A4	8/16/16	

NAVFAC

NORTH CAROLINA PROFESSIONAL SEAL 037630 ENGINEER ALLEN M. JAMISON

Aug 13 2016 10:34 AM

SEAL

CATLIN Engineers and Scientists

220 Old Dairy Road
Wilmington, NC 28405

Corporate Licensure No. for Engineering Services C-0585

A/E INFO

APPROVED

FOR COMMANDER NAVFAC

ACTIVITY

SATISFACTORY TO DATE

DES JAR DRW JAR CHK GJ

PM/DM EH

BRANCH MANAGER NY

CHIEF ENG/ARCH

FIRE PROTECTION

DEPARTMENT OF THE NAVY
NAVAL FACILITIES ENGINEERING COMMAND
PT NORTH CAROLINA

NAVAL FACILITIES ENGINEERING COMMAND – MIDATLANTIC
LAFAYETTE COMPLEX, NORFOLK, VIRGINIA

U.S. MARINE CORPS RECRUIT DEPOT
PARRIS ISLAND, SC

RANGE SAFETY IMPROVEMENTS & MODERNIZATION

SWPPP DETAILS

SCALE: SEE PLAN

EPROJECT NO.: 1354718

CONSTR. CONTR. NO.

NAVFAC DRAWING NO.
12723943

SHEET 78 OF 213

CS-505

DRAWFORM REVISION: 10 MARCH 2009

WET SEDIMENT BASIN – GENERAL NOTES

1. Sediment basins should not be placed in Waters of the State or USGS blue–line streams (unless approved by Federal Authorities).
2. Sediment basin's side slopes shall be seeded and, when necessary, stabilized with vegetative or synthetic matting to prevent the formation of rills and gullies.
3. Install three (3) rows of porous baffles with a minimum spacing of 10 feet. Baffles should ultimately be placed to maximize the space between each row of baffles and the basin's inlets/outlets. Only two (2) rows of baffles are necessary for basins that are less than 50 feet in length.
4. Porous Baffles should be composed of coir–based materials or TRMs with a light penetration (open spaces) between 10–35%. These materials should not have loose straw. Silt Fence may not be used as Porous Baffles.
5. Each porous baffles shall be installed across the entire width of the basin and along the basin's side slope until the height of the baffle intersects the slope.
6. Install skimmer and coupling (as necessary) to riser structure at orifice along bottom of the principle spillway's riser structure. (Refer to skimmer manufacturer for installation procedures and skimmer specifications.)
7. Skimmer should be equipped with a mechanism, such as a rope, to allow easy access to skimmer to unclogged orifice or perform other necessary maintenance.
8. Stormwater runoff entering the basin must be directed into proper BMPs to prevent erosion along side slopes and to prevent scour at the basin's inlets.
9. The forebay berm should consist of riprap, gabion, or an earthen berm with a rock filled outlet that is constructed across the bottom of the basin's width.
10. An additional cleanout stake for the forebay area is recommended and should be marked for cleanout at 50% of provided sediment storage.
11. The elevation of the emergency spillway should be at least 1 foot below the top of the embankment. The emergency spillway should not be located on fill material, when possible. Riprap and geotextile liner should be placed on all spillways that must be located on fill material.

WET SEDIMENT BASIN – INSPECTION AND MAINTENANCE

1. The key to a functional sediment basin is weekly inspections, routine maintenance, and regular sediment removal.
2. Attention to sediment accumulations within the basin is extremely important. Accumulated sediment deposition should be continually checked and removed when necessary.
3. Remove accumulated sediment when it reaches 50% of the design sediment storage volume or 1/2 the height of the riser structure, whichever is reached first.
4. Removed sediment from the basin shall be placed in stockpile storage areas or spread thinly across the disturbed area. Stabilize the removed sediment after it is relocated.
5. Inspections of sediment basins should be conducted once every calendar week and, as recommended, within 24–hours of each rainfall event that produces ½–inch or more of precipitation.
6. All temporary sediment basins, which are not to be converted to a detention basin post–construction, should be removed within 30 days after final site stabilization is achieved.
7. Disturbed areas resulting from the removal of the sediment basin should be permanently stabilized and additional BMPs, such as silt fence, should be utilized to accept stormwater runoff from this disturbed area until final stabilization is reached.

South Carolina Department of Health and Environmental Control
WET SEDIMENT BASIN
STANDARD DRAWING NO. SC–01A Page 3 of 3
GENERAL NOTES FEBRUARY 2014 DATE

WET SEDIMENT BASIN PLAN VIEW

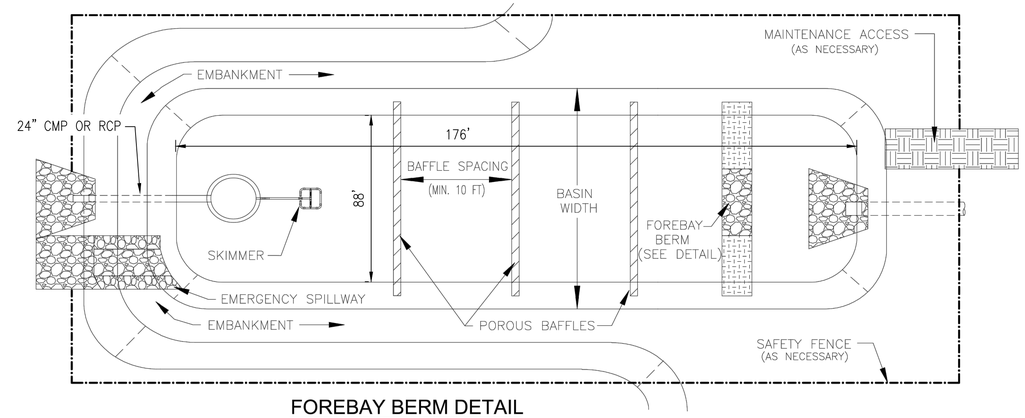

FOREBAY BERM DETAIL

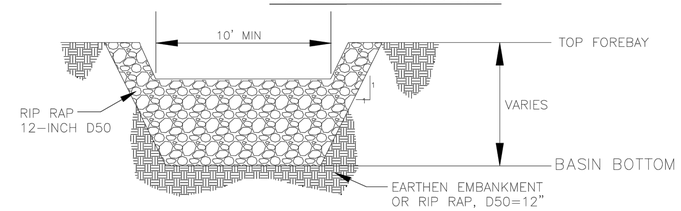

South Carolina Department of Health and Environmental Control
WET SEDIMENT BASIN
STANDARD DRAWING NO. SC–01A Page 2 of 3
NOT TO SCALE FEBRUARY 2014 DATE

WET SEDIMENT BASIN SECTIONAL VIEW

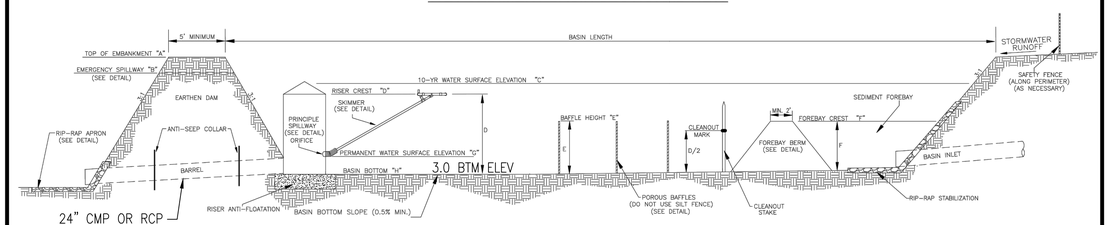

EMERGENCY SPILLWAY DETAIL

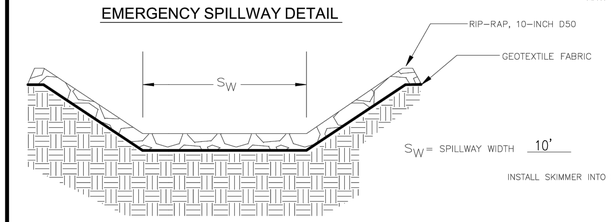

S_W = SPILLWAY WIDTH 10'

PRINCIPLE SPILLWAY DETAIL

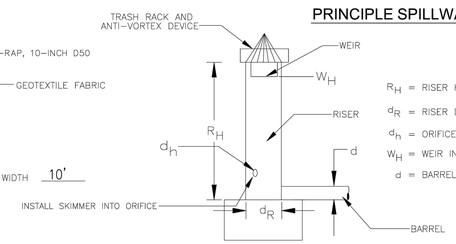

R_H = RISER HEIGHT 3
d_R = RISER DIAMETER 3
d_h = ORIFICE DIAMETER 4"
W_H = WEIR INVERT HEIGHT NOT REQUIRED
d = BARREL DIAMETER 24"

PLAN SYMBOL

SEDIMENT BASIN DESIGN TABLE

Sediment Basin	"A"	"B"	"C"	"D"	"E"	"F"	"G"	"H"	Skimer Size (in.)	Skimer Orifice (in.)	Skimer Daily Discharge Capacity (FT^3/DAY)	Skimer Average Discharge Rate (CFS)	Dewatering Time (DAYS)	No. of Skimmers
TSB#1	8.85	7.85	7.47	3.35	6.0'	4.1'	4.0	3.5	4"	4"	60,327	0.23	3	1

South Carolina Department of Health and Environmental Control
WET SEDIMENT BASIN
STANDARD DRAWING NO. SC–01A Page 1 of 3
NOT TO SCALE FEBRUARY 2014 DATE

WET SEDIMENT BASIN
NOT TO SCALE
CG–107 B4

SYM	DESCRIPTION	DATE	APPR
1	UPDATED TABLE	8/16/16	

NAVFAC

Aug 13 2016 10:34 AM

CATLIN Engineers and Scientists
220 Old Dairy Road
Wilmington, NC 28405
Corporate Licensure No. for Engineering Services C-0585

A/E INFO

APPROVED
FOR COMMANDER NAVFAC
ACTIVITY
SATISFACTORY TO DATE

DES JAR DRW JAR CHK GJ
PM/DM EH
BRANCH MANAGER NY
CHIEF ENG/ARCH
FIRE PROTECTION

DEPARTMENT OF THE NAVY
NAVAL FACILITIES ENGINEERING COMMAND
IPT NORTH CAROLINA
NAVAL FACILITIES ENGINEERING COMMAND ~ MIDATLANTIC
LAFAYETTE COMPLEX, NORFOLK, VIRGINIA
U.S. MARINE CORPS RECRUIT DEPOT
PARRIS ISLAND, SC
RANGE SAFETY IMPROVEMENTS & MODERNIZATION
SWPPP DETAILS

SCALE: SEE PLAN
EPROJECT NO.: 1354718
CONSTR. CONTR. NO.
NAVFAC DRAWING NO. 12723944
SHEET 79 OF 213
CS-506

DRAWFORM REVISION: 10 MARCH 2009

NOTES:
1. SERVICE LATERAL SHALL BE INSTALLED 12" BELOW FINISHED GRADE AND CAPPED IN A MANNER SUITABLE FOR PRESSURE TESTING.
2. CLEAN OUTS INSIDE GRASSED AREA SHALL CONSIST OF PVC PLUG IN SEWER LIDDED VALVE BOX SURROUNDED BY A CONCRETE COLLAR. COLLAR SHALL BE FLUSH WITH FINISHED GRADE. VALVE BOX LID SHALL NOT PROTRUDE ABOVE COLLAR TOP.
3. ALL CLEAN OUTS ARE TO BE 4", INCLUDING CLEAN OUTS ON 6" SEWER LATERALS.

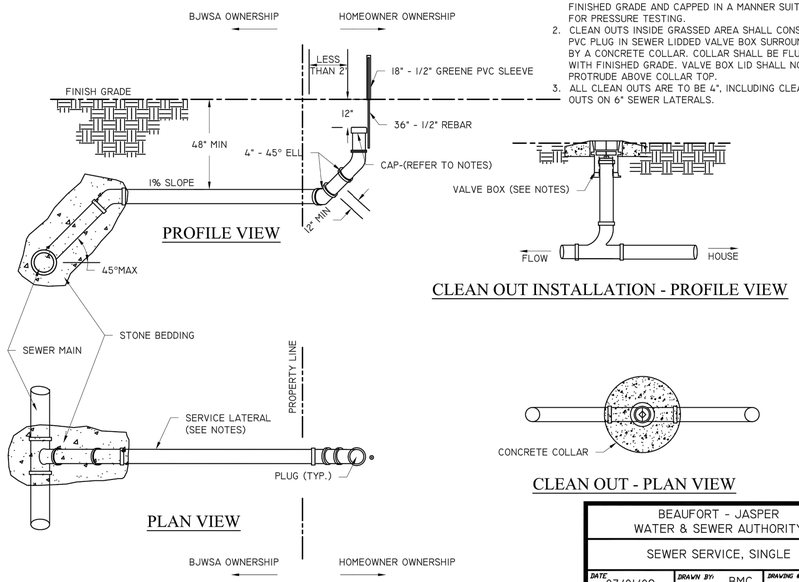

BEAUFORT - JASPER WATER & SEWER AUTHORITY		
SEWER SERVICE, SINGLE		
DATE 07/01/09	DRAWN BY: BMC	DRAWING # S-11
SCALE: N.T.S.	APPROVED BY: ERS	

SEWER SERVICE, SINGLE AND CLEAN OUT (C2)

NOT TO SCALE — CU-101, CU-102, CU-104

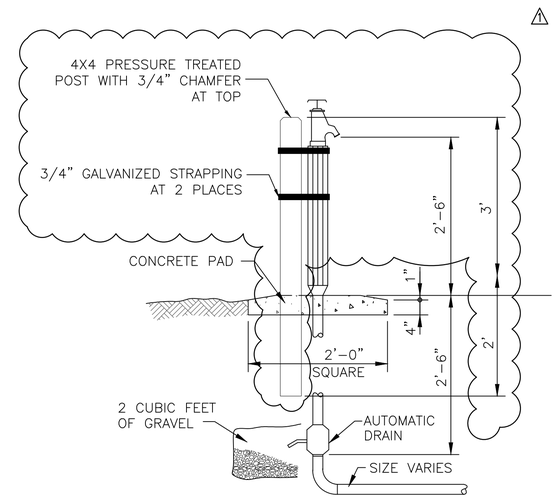

YARD HYDRANT (C5)

NOT TO SCALE — CU-102, CU-103

NOTES:
1. BURY LINE INDICATED ON HYDRANT SHALL BE AT FINAL GRADE.
2. ALL FITTINGS SHALL BE RESTRAINED.

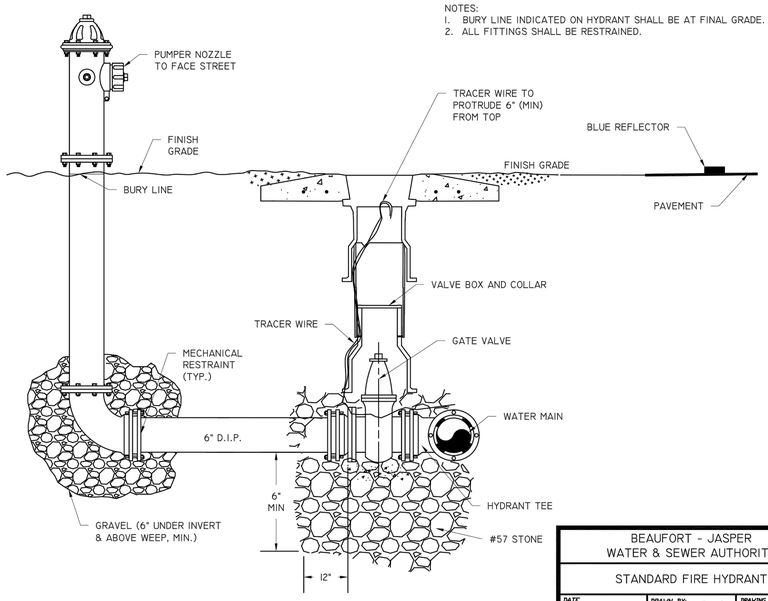

BEAUFORT - JASPER WATER & SEWER AUTHORITY		
STANDARD FIRE HYDRANT		
DATE 07/01/09	DRAWN BY: BMC	DRAWING # W-03
SCALE: N.T.S.	APPROVED BY: ERS	

STANDARD FIRE HYDRANT (A2)

NOT TO SCALE — CU-101, CU-102, CU-103, CU-104

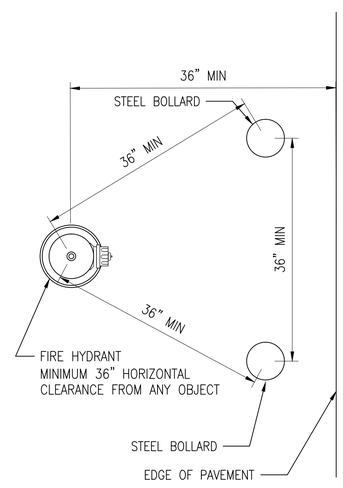

PLAN VIEW

NOTES:
1. BURY LINE INDICATED ON HYDRANT SHALL BE AT FINAL GRADE.
2. ALL FITTINGS SHALL BE RESTRAINED.

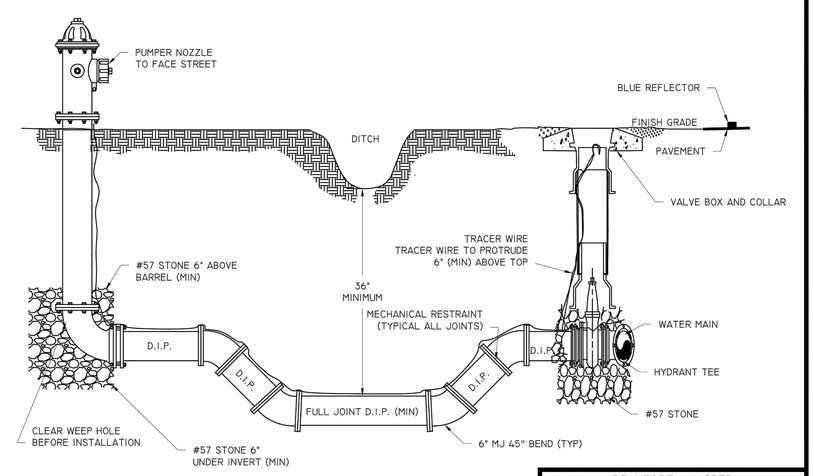

BEAUFORT - JASPER WATER & SEWER AUTHORITY		
FIRE HYDRANT DETAIL UNDER DITCH		
DATE 07/01/09	DRAWN BY: BMC	DRAWING # W-04
SCALE: N.T.S.	APPROVED BY: ERS	

FIRE HYDRANT DETAIL UNDER DITCH (A4)

NOT TO SCALE — CU-103, CU-104

SYM	DESCRIPTION	DATE	APPR
1	REVISED DETAIL C5	8/16/16	

NAVFAC

NORTH CAROLINA PROFESSIONAL ENGINEER SEAL 037630 DOUGLAS ALLEN M. JAMISON

Aug 13 2016 10:34 AM

CATLIN Engineers and Scientists
220 Old Dairy Road
Wilmington, NC 28405
Corporate Licensure No. for Engineering Services C-0585

A/E INFO

APPROVED

FOR COMMANDER NAVFAC

ACTIVITY

SATISFACTORY TO DATE

DES JAR DRW JAR CHK GJ

PM/DM EH

BRANCH MANAGER NY

CHIEF ENG/ARCH

FIRE PROTECTION

DEPARTMENT OF THE NAVY
NAVAL FACILITIES ENGINEERING COMMAND
IPT NORTH CAROLINA

NAVAL FACILITIES ENGINEERING COMMAND – MIDATLANTIC
LAFAYETTE COMPLEX, NORFOLK, VIRGINIA

U.S. MARINE CORPS RECRUIT DEPOT
PARRIS ISLAND, SC

RANGE SAFETY IMPROVEMENTS & MODERNIZATION

WATER AND SANITARY SEWER DETAILS

SCALE: SEE PLAN

EPROJECT NO.: 1354718

CONSTR. CONTR. NO.

NAVFAC DRAWING NO. 12723951

SHEET 86 OF 213

CS-513

DRAWFORM REVISION: 10 MARCH 2009

NOTES
1. METAL POSTS TO BE GALVANIZED. ALL BOLTS, NUTS, WASHERS AND SCREWS MUST BE RUSTPROOF.
2. CONCRETE FOR FOOTING SHALL BE OF PORTLAND CEMENT AND HAVE A MINIMUM COMPRESSIVE STRENGTH OF 3,000 P.S.I.
3. SIGNS WILL BE FABRICATED BY USING A REFLECTING COATING IN THE SYMBOL, MESSAGE AND BORDERS APPLIED TO A SHEET ALUMINUM BACKING (0.80" IN THICKNESS).
4. MESSAGE LETTERING SHALL BE UPPER CASE (SERIES B) 2" HIGH IN ACCORDANCE WITH MANUAL ON UNIFORM TRAFFIC CONTROL DEVICES.
5. SIGN POST SHALL BE MIN. 2'-0" CLEAR FROM BACK OF CURB.

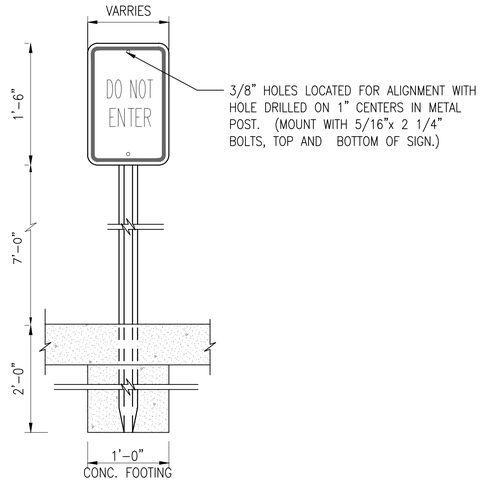

TYPICAL SIGN DETAIL (C1)
NOT TO SCALE — CS-105, 106

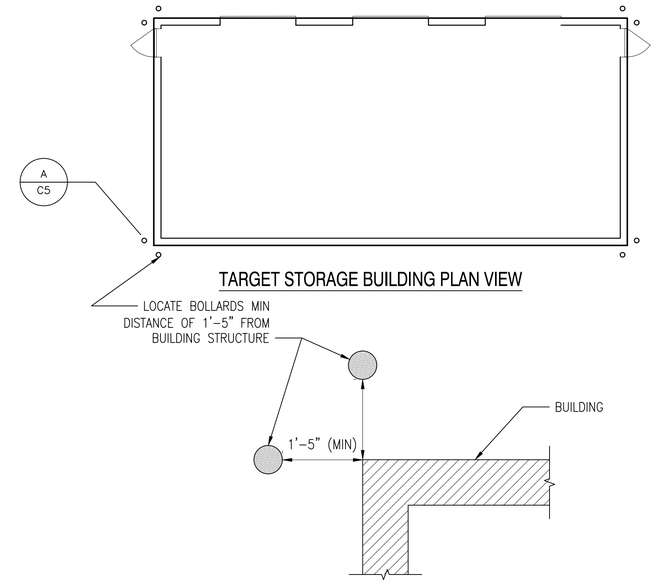

TARGET STORAGE BUILDING PLAN VIEW

TYPICAL BOLLARD PLACEMENT DETAIL A

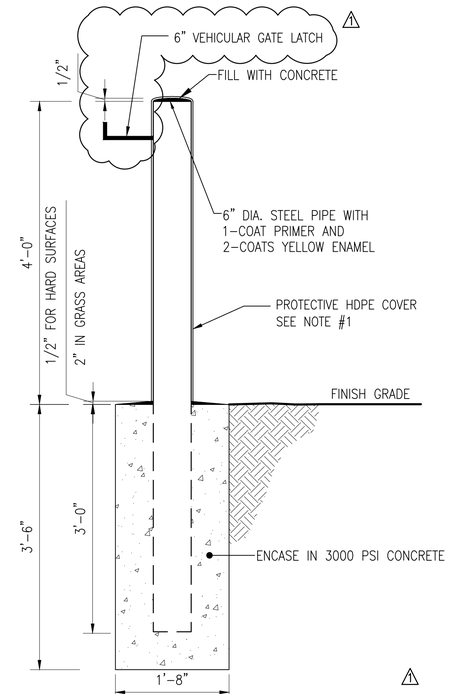

NOTE
1. FOR BOLLARD LOCATED ADJACENT VEHICULAR GATE WELD LATCH TO BOLLARD AND DELETE HDPE COVER.

BOLLARD DETAIL (C5)
NOT TO SCALE — CS-101, 102, 104, 106

1. IF NECESSARY, PLATE CAN BE ADJUSTED IN SOIL AFTER ASSEMBLY OF FIRST PIPE RISER TO MAINTAIN RISER IN VERTICAL POSITION.
2. ADDITIONAL PIPE AND PVC SLEEVE SECTIONS WILL BE ADDED DURING PLACEMENT OF FILL SO AS TO KEEP BOTH ABOVE GRADE. CARE WILL BE EXERCISED IN FILLING AROUND RISER TO MAINTAIN IT IN A VERTICAL POSITION.
3. SITES OF PLATES WILL BE PROTECTED FROM EARTHWORK EQUIPMENT AND VEHICLES THROUGH USE OF STAKES AND FLAGGING. PLATE ASSEMBLIES DAMAGED OR PUSHED OUT OF VERTICAL ALIGNMENT DURING EARTHWORK OPERATIONS WILL BE REINSTALLED BY CONTRACTOR AT NO ADDITIONAL COST TO THE GOVERNMENT.
4. ONE OR MORE VERTICAL REFERENCES (BENCHMARKS) WILL BE ESTABLISHED WITHIN A CLEAR LINE OF SIGHT OF THE FINISHED TOPS OF THE PLATE ASSEMBLIES AT A DISTANCE OF NO MORE THAN 250 FEET FROM THE FURTHEST PLATE ASSEMBLY AND WITHIN AN AREA THAT WILL NOT BE SUBJECT TO DISTURBANCE DURING CONSTRUCTION.
5. CONTRACTOR WILL MONITORING THE ELEVATIONS OF TOPS OF RISERS ON A WEEKLY BASIS AND SUBMIT TO THE CONTRACTING OFFICER. REFER TO SECTION 31 23 00.00 20 "EXCAVATION AND FILL" FOR ADDITIONAL INFORMATION.
6. CONTRACTOR WILL ABANDON SETTLEMENT PLATES IN PLACE WHEN DIRECTED BY CONTRACTING OFFICER (MIN 90 DAYS) BY REMOVING UPPER 5 FEET OF PLATE ASSEMBLY (RISER AND SLEEVE) AND BACKFILLING THE RESULTING EXCAVATION WITH MATERIAL INDICATED.

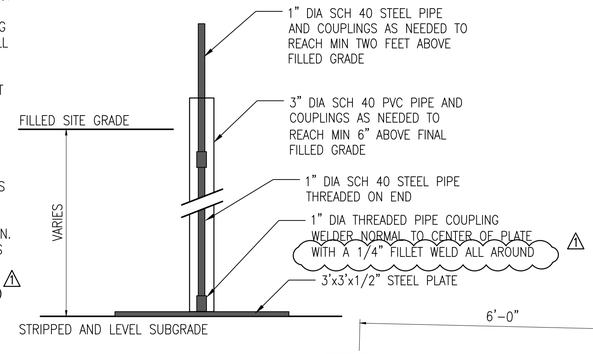

SETTLEMENT PLATE DETAIL (B1)
NOT TO SCALE

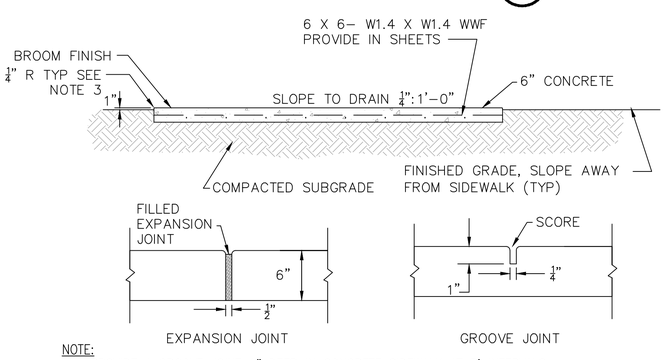

NOTE:
1. PROVIDE A GROOVE JOINT 1" DEEP IN CONCRETE SIDEWALK AT 5' INTERVALS.
2. PROVIDE A 1/2" EXPANSION JOINT WITH FILLER AT 50' INTERVALS AND AT ALL LOCATIONS WHERE THE SIDE JOINS A RIGID STRUCTURE (i.e., EXISTING SIDEWALK, CURB, BUILDING, UTILITY STRUCTURES, ETC.)
3. CONCRETE EDGE WILL BE FORMED OR TROWELED.

CONCRETE SIDEWALK (A1)
NOT TO SCALE

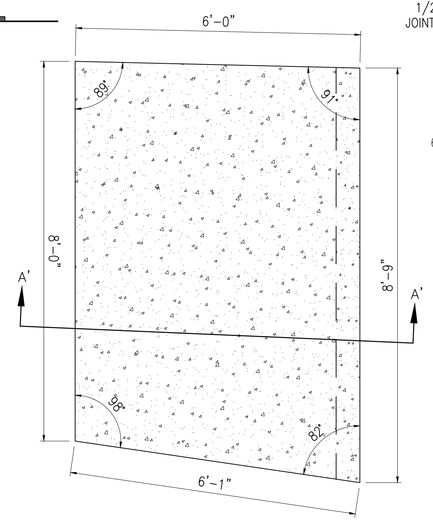

PLAN VIEW

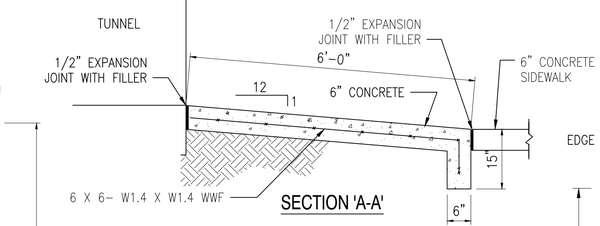

SECTION 'A-A'

NOTE:
1. CONCRETE EDGE WILL BE FORMED OR TROWELED.

TUNNEL ENTRANCE RAMP (A3)
NOT TO SCALE — CS-102,104

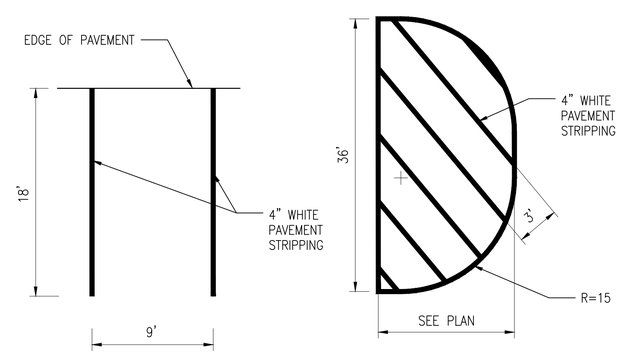

18' PARKING STALL

NO PARKING MEDIAN

STRIPING DETAIL (A5)
NOT TO SCALE — CS-106

STM	DESCRIPTION	DATE	APPR
1	REVISED DETAILS C5 AND B1	8/16/16	

NAVFAC

NORTH CAROLINA PROFESSIONAL ENGINEER SEAL 037630 EDWARD ALLEN JAMISON
Aug 13 2016 10:34 AM
SEAL

CATLIN Engineers and Scientists
220 Old Dairy Road
Wilmington, NC 28405
Corporate Licensure No. for Engineering Services C-0585
A/E INFO

APPROVED
FOR COMMANDER NAVFAC
ACTIVITY
SATISFACTORY TO DATE

DES	JAR	DRW	JAR	CHK	GJ
PM/DM	EH				
BRANCH MANAGER	NY				
CHIEF ENG/ARCH					
FIRE PROTECTION					

DEPARTMENT OF THE NAVY
NAVAL FACILITIES ENGINEERING COMMAND
IPT NORTH CAROLINA
NAVAL FACILITIES ENGINEERING COMMAND ~ MIDATLANTIC
LAFAYETTE COMPLEX, NORFOLK, VIRGINIA
U.S. MARINE CORPS RECRUIT DEPOT
PARRIS ISLAND, SC
RANGE SAFETY IMPROVEMENTS & MODERNIZATION
SITE DETAILS

SCALE: SEE PLAN
EPROJECT NO.: 1354718
CONSTR. CONTR. NO.
NAVFAC DRAWING NO.
12723955
SHEET 90 OF 213
CS-517

DRAWFORM REVISION: 10 MARCH 2009