ENGINEERING SERVICE CENTER
Port Hueneme, California 93043-4370

# ROUTINE WATERFRONT FACILITIES INSPECTIONS & ASSESSMENTS AT

# NAVAL STATION NORFOLK BULKHEADS NORFOLK, VIRGINIA

## Report # CR-6465-OCN (Volume 1 of 2)

May 2008

Prepared for

NFESC EAST COAST DET
Washington Navy Yard
Building 36, Suite 333
720 Kennon Street
Washington DC, 20374-5063

Prepared By:

22 Cortlandt Street, 33rd Fl.
New York, NY 10007

Distribution limited to U.S. Government agencies and their contractors; administrative/operational use. Other requests for this document shall be referred to the Naval Facilities Engineering Services Center.

ENGINEERING SERVICE CENTER
Port Hueneme, California 93043-4370

# ROUTINE WATERFRONT FACILITIES INSPECTIONS & ASSESSMENTS AT

# NAVAL STATION NORFOLK BULKHEADS NORFOLK, VIRGINIA

**REPORT # CR-6465-OCN**

May 2008

By:
HPA, Inc.
22 Cortlandt St, 33rd Fl.
New York, New York 10007

Under:
Contract No. N62473-06-D-3029
Delivery Order No. 006

Prepared for:
NFESC EAST COAST DETACHMENT
Washington Navy Yard
Building 36, Suite 333
720 Kennon Street, Suite 333
Washington DC, 20374

## 2.5 PATRIOT POINT CONDITION INDEX - 45

The Scope of Work for this facility included both above water and underwater inspections of the structural systems. Patriot Point is in poor condition. The Operational Capability Rating is C-3 and the Condition Index is 45.

There was no record of any previous inspections of Patriot Point and therefore there are no previously recommended repairs.

The deficiencies of the various structural components are tabulated in Appendix A – Structural Data. The locations of the deficiencies and a typical section are shown on Fig 2.5-1 and Fig 2.5-2, respectively, and Photo 2.5-1 shows an overall view of the facility.

Each asset is assessed and assigned a numerical Condition Index (CI), ranging from 1 (failed) to 100 (good) in accordance with Table 1-1 – Definition of Condition Index (CI).

### 2.5.1 - OBSERVED CONDITIONS AND ASSESSMENT

#### H1010 SUBSTRUCTURE Condition Index – 45

#### H101001 – PILE FOUNDATIONS CI - 15

The steel sheet pile bulkhead along the north shore is in critical condition, with severely deteriorated steel and severe erosion of the upland area (Photos 2.5-2 and 2.5-3). The northwestern end of the facility, between the steel sheet pile bulkhead and the edge of the CEP175 bulkhead consists of concrete construction debris placed as riprap (Photo 2.5-4). The sheet pile bulkhead is no longer performing as designed. This area is currently chained off.

#### H101005 – REVETMENTS CI - 90

The riprap and concrete bag revetments are generally in good condition with no notable deficiencies (Photos 2.5-5 and 2.5-6).

## 2.5.2 - RECOMMENDATIONS

### H101001 – PILE FOUNDATIONS

Replace the steel sheet pile bulkhead and concrete debris along the north shore of the facility with a new riprap revetment by cutting the steel sheet piles to the mudline and backfilling the eroded shoreline with earth.

PHOTO 2.5-1. Overall view of Patriot point from northwestern end looking southeast.

PHOTO 2.5-2. Patriot Point, North shore: Severe deterioration of steel sheet pile bulkhead and erosion of embankment, looking southeast.

PHOTO 2.5-3. Patriot Point, North shore: Severe deterioration of steel sheet pile bulkhead and erosion of embankment, looking west.

PHOTO 2.5-4. Patriot Point: Concrete construction debris used as riprap at northwestern edge of facility.

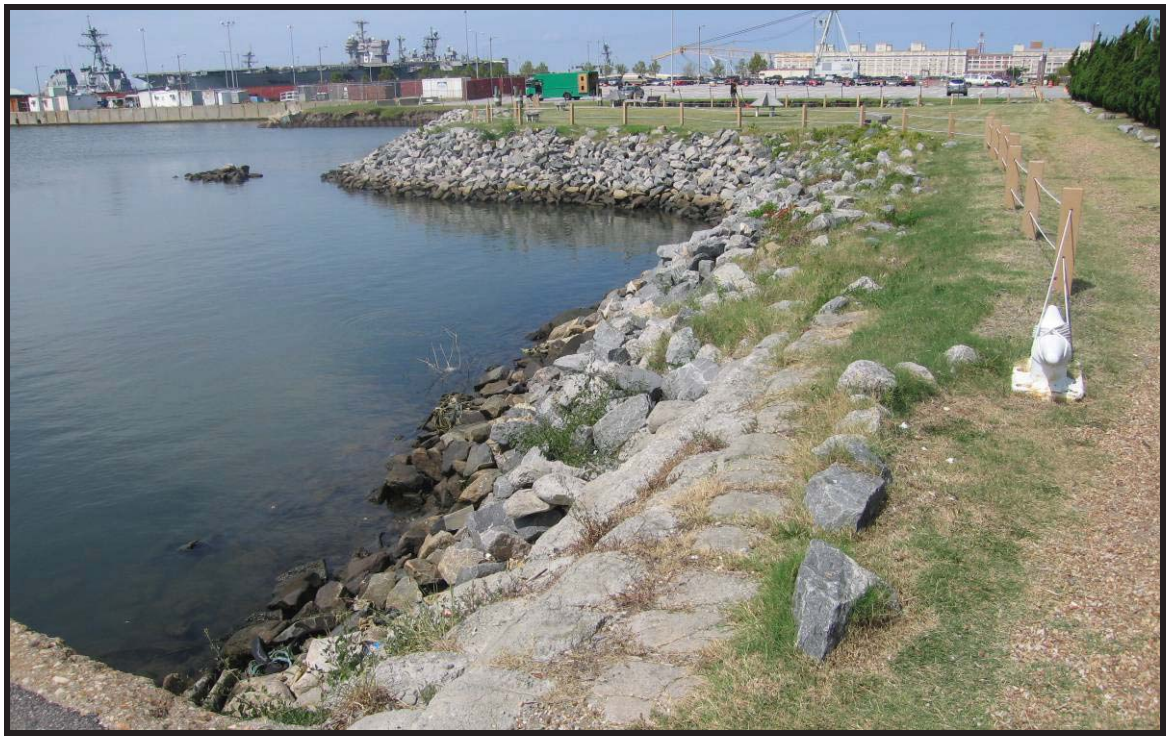

PHOTO 2.5-5. Patriot Point, southeast corner: Typical good condition of riprap and grout filled bag embankments, looking north.

PHOTO 2.5-6. Patriot Point, northeast corner: Typical good condition of grout filled bag embankments, looking southeast.

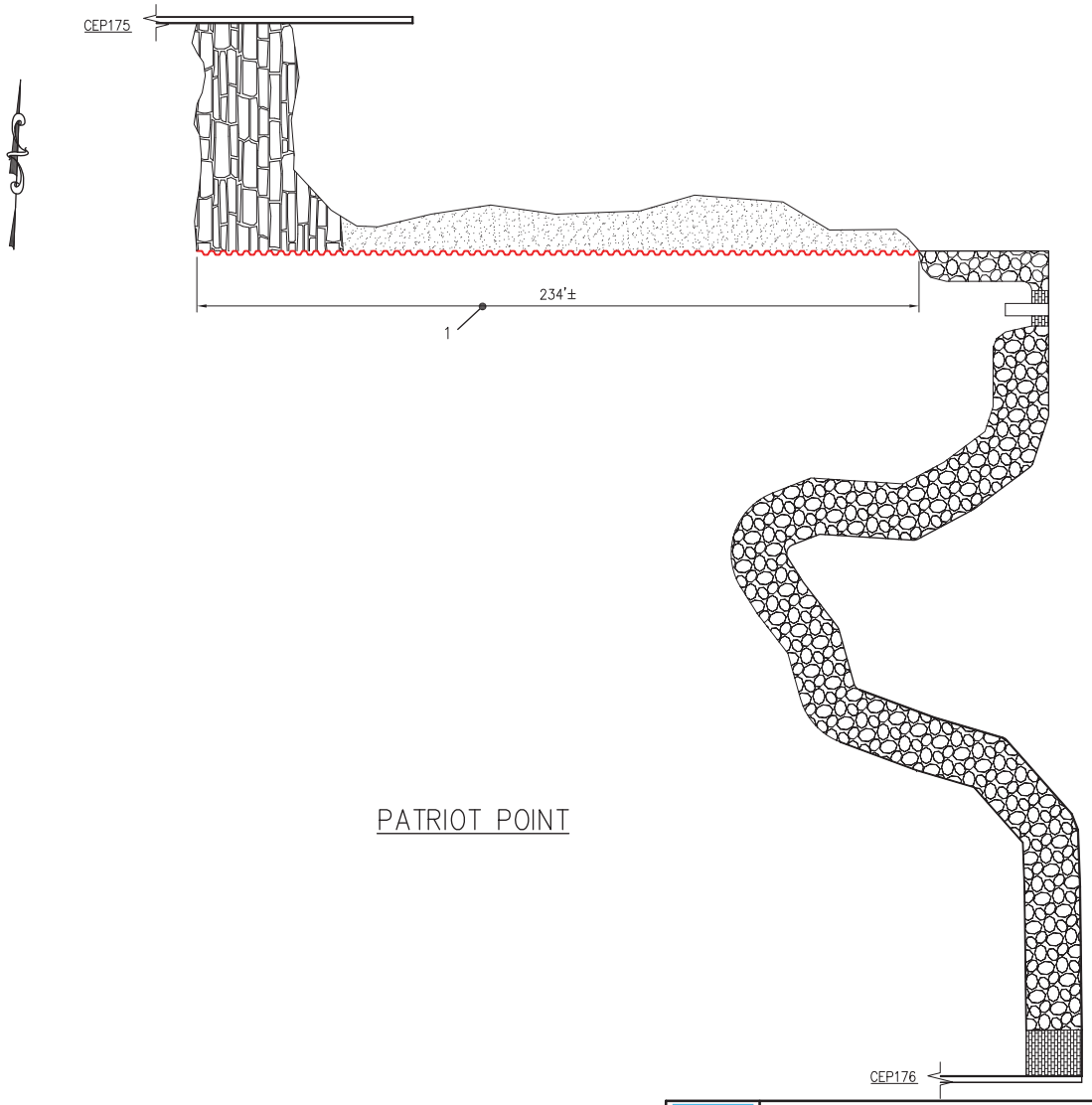


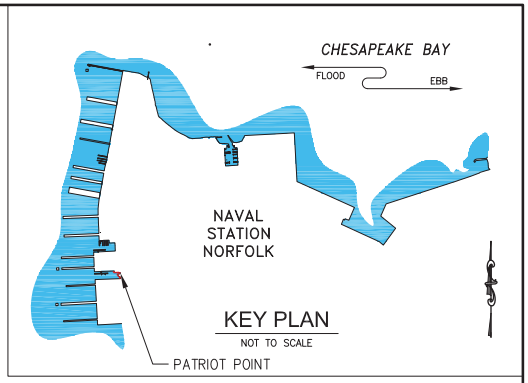


## LEGEND

1 —● DEFICIENCY ID

| | | | | |
|---|---|---|---|---|
| NAVFAC | GRAPHIC SCALE<br>1"=40'  0 40 80 FT. | DATE<br>MAY 2008 | HPA<br>Contract Number<br>N62473-06-D-3029 | NAVAL FACILITIES ENGINEERING SERVICE CENTER<br>EAST COAST DETACHMENT<br>WASHINGTON D.C.<br>NAVAL STATION NORFOLK — NORFOLK, VA<br>PATRIOT POINT<br>PLAN<br>FIG. NO. 2.5-1 |

P:\Active Projects\DNAVY 701 - 703 - NAVSTA Norfolk\26 - Reports\26.3 - Final (Submitted 5-14-08)\26.4.3 - Figures\DNAVY702-F002-05-1.dwg 05/12/08 15:52 MartinezMA

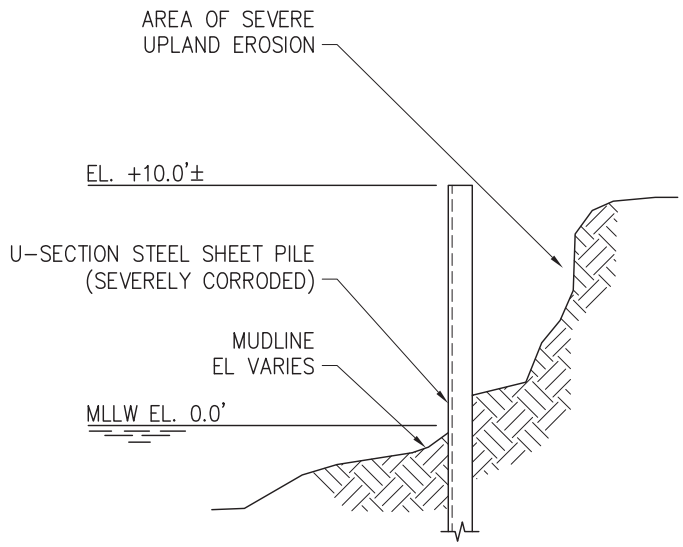


TYPICAL SECTION – NORTH SHORE
1/8" = 1'-0"

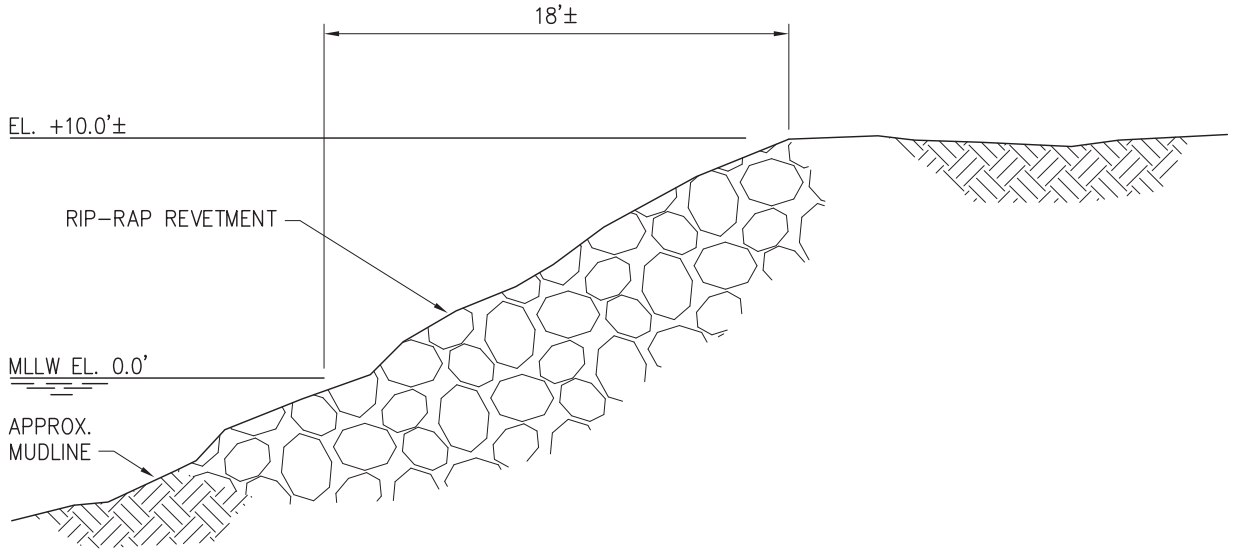


TYPICAL SECTION – RIP-RAP REVETMENT
1/8" = 1'-0"

| | | | | |
|---|---|---|---|---|
| NAVFAC | GRAPHIC SCALE<br>0 5 10 15 FT.<br>1/8"=1'-0" | DATE<br>MAY 2008 | HPA<br>Contract Number<br>N62473-06-D-3029 | NAVAL FACILITIES ENGINEERING SERVICE CENTER<br>EAST COAST DETACHMENT<br>WASHINGTON, D.C.<br>NAVAL STATION NORFOLK NORFOLK, VA<br>PATRIOT POINT<br>TYPICAL SECTIONS<br>FIG. NO. 2.5-2 |

C:\HPA\Projects and Proposals\PROJECTS\DINAVY701-3 NNS\26 - Reports\26.4 - Working Report(s)\26.4.3 - Figures\DINAVY702-F002-05-2.dwg 02/29/08 21:29 MerryCR

## 2.6 CEP175 BULKHEAD CONDITION INDEX - 60

The Scope of Work for this facility included both above water and underwater inspections of the structural systems and the mooring hardware. The CEP175 Bulkhead is in fair condition. The Operational Capability Rating is C-2 and the Condition Index is 60.

The overall condition of the CEP175 Bulkhead has become worse since the previous above water and underwater inspection performed by Childs Engineering Corporation in 2001. The repairs recommended in the 2001 report and their current status is presented in Table 2.6-1.

**TABLE 2.6-1**
**Status of CEP176 Previously Recommended Repairs**

| FACILITY NFA NO. PR NO. | 2001 RECOMMENDATIONS | CURRENT STATUS |
|---|---|---|
| CEP175 Bulkhead NFA100001162500 PR20093 (Previously CEP192, CEP175 and CEP203) | 1. Plug gaps/offsets in sheet piling. | 1. Repairs completed. |
| | 2. Repair disintegrated curbing. | 2. Repairs not completed. |
| | 3. Repair areas of spalling and disintegration. | 3. Repairs not completed. |
| | 4. Fill seawall joints with sealer. | 4. Repairs completed. |
| | 5. Backfill sinkholes. | 5. Repairs not completed. |
| | 6. Monitor sheet piles and seawall with spalling and cracking. | 6. Unknown |
| | 7. Recoat mooring hardware. | 7. Repairs not completed. |

The deficiencies of the various structural components are tabulated in Appendix A – Structural Data. The locations of the deficiencies and a typical section are shown on Fig 2.6-1, Fig 2.6-2, and Fig 2.6-3, respectively, and Photo 2.6-1 shows an overall view of the facility.

Each asset is assessed and assigned a numerical Condition Index (CI), ranging from 1 (failed) to 100 (good) in accordance with Table 1-1 – Definition of Condition Index (CI).

## 2.6.1 - OBSERVED CONDITIONS AND ASSESSMENT

### H1010 SUBSTRUCTURE — Condition Index – 60

#### H101001 – PILE FOUNDATIONS — CI - 60

The concrete sheet piles are generally in fair condition with minor and moderate spalls, erosion, and delaminations in the concrete sheets (Photo2.6-2). There are isolated areas with large spalls, occasionally with exposed and corroded reinforcing bars. There are a few areas with gaps between adjacent sheets, typically with voids at these gaps (Photo 2.6-3). Several of the gaps have been repaired since the previous inspection.

At one location at Station 15+02, near the north corner of the bulkhead, there is a 9-1/2 in. wide gap between adjacent concrete sheet piles with a large void of up to 6 ft deep behind the bulkhead (Photo 2.6-4).

The condition of the concrete sheet piles does not currently affect the overall structural integrity of the wharf; however, further deterioration may lead to future reduction of the capacity.

#### H101002 – PILE CAPS — CI - 60

The concrete pile cap and concrete fascia are generally in fair condition with minor erosion (Photo 2.6-5), areas of spalling and delaminations particularly along the top edge of the fascia, and hairline to 1/16 in. wide cracking, with a few isolated 1/4 in. wide vertical cracks (2.6-6). There are areas with large spalls in the concrete fascia and curb (Photos 2.6-7, 2.6-8, and 2.6-9).

### H1030 – DECK COMPONENTS — Condition Index – 75

#### H103001 – DECK — CI - 75

The top of the deck is generally in satisfactory condition. There are isolated areas with minor subsidence or small sinkholes along the inshore face of the bulkhead (Photo 2.6-10).

**H103002 – MOORING FOUNDATIONS** **CI - 75**

The mooring foundations are generally in satisfactory condition, typically with minor cracking of the bases (Photo 2.6-11).

**H1040 – MOORING & BERTHING SYSTEMS** **Condition Index – 30**

**H104001 – PRIMARY FENDER SYSTEM** **CI - 15**

The timber fender system at the bulkhead is generally in critical condition and is typically severely deteriorated or missing along the south and west faces (Photo 2.6-5). The timber fender system on the north face of the wharf is intact (Photo 2.6-12); however, several of the timber fender piles, chocks, and wales along the northern face of the bulkhead are broken (Photo 2.6-13). Mooring and berthing at the wharf is severely limited due to the condition of the fender system.

**H104005 – MOORING HARDWARE** **CI - 45**

The mooring hardware elements on the north face of the bulkhead are generally in poor condition, typically with minor corrosion and wearing of the fittings; however, three cleats are loose due to deteriorated anchors or loose bolts (Photo 2.6-14) and three additional cleats have slight vertical displacements. Mooring and berthing at the wharf is limited due to the condition of the cleats.

A summary of the overall condition of the mooring fittings for the CEP175 Bulkhead is presented in Table 2.6-2. The location of each of the individual mooring fittings is shown on Fig 2.6-4 and Fig 2.6-5.

**TABLE 2.6-2**
**Summary of CEP175 Mooring Hardware Condition**

| FACILITY | FITTING ID NUMBER | STATION | MOORING HARDWARE TYPE | DESIGN CAPACITY (TONS) [1] | CONDITION | |
|---|---|---|---|---|---|---|
| | | | | | FITTING | BASE |
| CEP175 | C-1 | 19+76 | 24 in. Cleat | 7 | 3 | 2 |
| CEP175 | C-2 | 20+27 | 24 in. Cleat | 7 | 4 | 2 |
| CEP175 | C-3 | 20+79 | 24 in. Cleat | 7 | 3 | 2 |
| CEP175 | C-4 | 21+30 | 24 in. Cleat | 7 | 3 | 2 |

| FACILITY | FITTING ID NUMBER | STATION | MOORING HARDWARE TYPE | DESIGN CAPACITY (TONS) [1] | CONDITION | |
|---|---|---|---|---|---|---|
| | | | | | FITTING | BASE |
| CEP175 | C-5 | 21+80 | 24 in. Cleat | 7 | 4 | 2 |
| CEP175 | C-6 | 22+30 | 24 in. Cleat | 7 | 4 | 2 |
| CEP175 | C-7 | 22+80 | 24 in. Cleat | 7 | 2 | 2 |
| CEP175 | C-8 | 23+30 | 24 in. Cleat | 7 | 2 | 2 |
| CEP175 | C-9 | 23+75 | 24 in. Cleat | 7 | 2 | 2 |
| CEP175 | C-10 | 24+32 | 24 in. Cleat | 7 | 2 | 2 |
| CEP175 | C-11 | 24+82 | 24 in. Cleat | 7 | 2 | 2 |

CONDITION RATING KEY

1 = GOOD CONDITION

2 = MINOR DETERIORATION

3 = MODERATE DETERIORATION

4 = SEVERE DETERIORATION

1. Represents nominal capacity. Values are estimated based on comparison to similar sized fittings from UFC 4-150-08, 01 April 2001, "Table 2-1. Commonly Used U.S. Navy Pier Mooring Fittings." and from comparison of similar sized fittings from the report "Routine Waterfront Facilities Inspections and Assessments at Norfolk Naval Shipyard," Report CR-6427-OCN.

## 2.6.2 - RECOMMENDATIONS

### H101001 – PILE FOUNDATIONS

The large spalls with exposed reinforcing and the wide gap with the void in the concrete sheet piles should be repaired with formed concrete patches. New reinforcing should be spliced where the exposed reinforcing is severely corroded, and any voids should be pumped with concrete.

### H101002 – PILE CAPS

The large spalls with exposed reinforcing bars in the concrete pile cap, concrete fascia, and concrete curb should be repaired with formed concrete patches. New reinforcing should be spliced where the exposed reinforcing is severely corroded.

### H104001 – PRIMARY FENDER SYSTEM

The broken and damaged piles, wales, and chocks on the timber fender system at the north face of the wharf should be repaired.

**H104005 –MOORING HARDWARE**

The loose cleats and cleats with vertical displacement should be re-anchored to the concrete fascia.

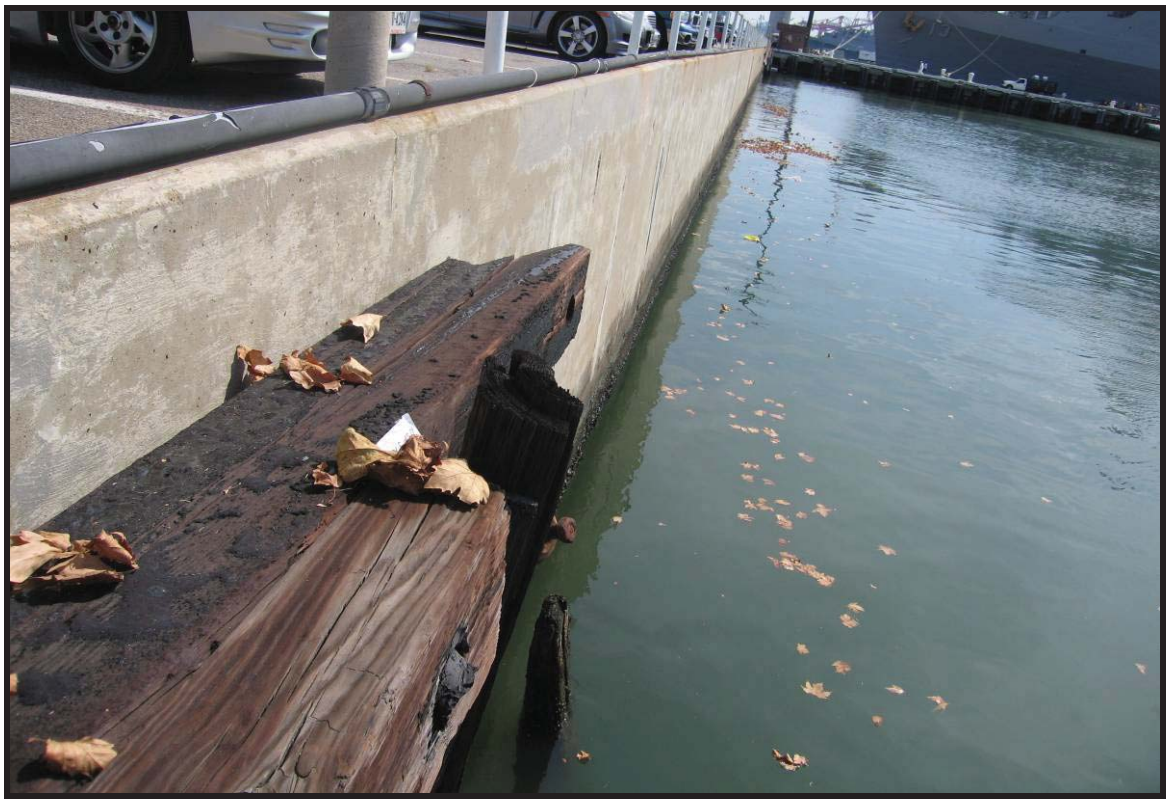

PHOTO 2.6-1. Overall view of CEP175 between Piers 4 and 5, looking south.

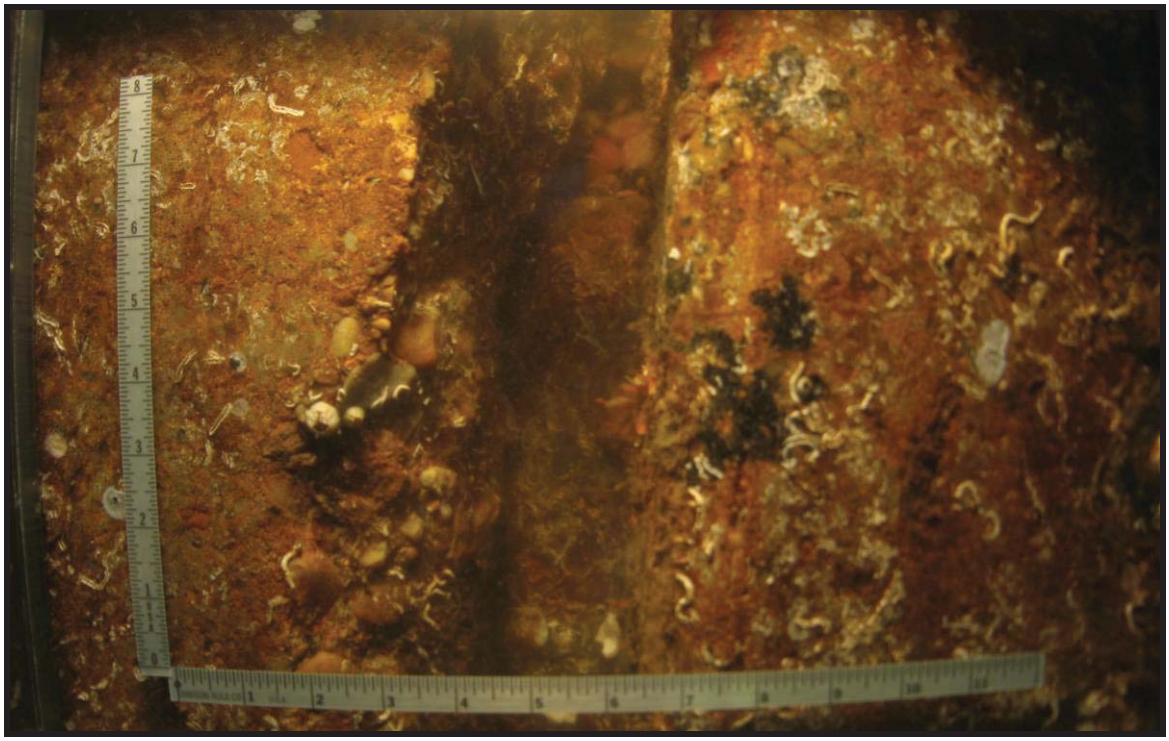

PHOTO 2.6-2. CEP175, Sta. 13+90: Typical minor spalling at concrete sheet piles, elev. -17 ft.

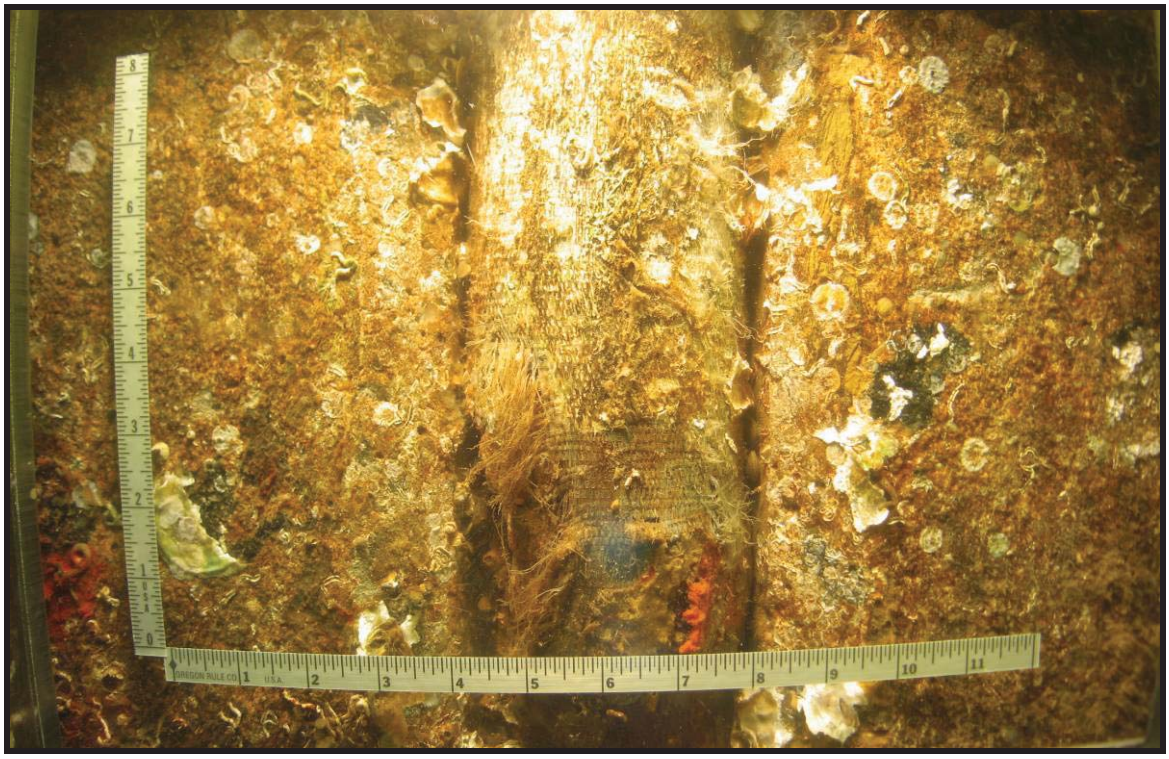

PHOTO 2.6-3. CEP175, Sta. 14+90: Typical gap repair at concrete sheet piles, elev. -7 ft.

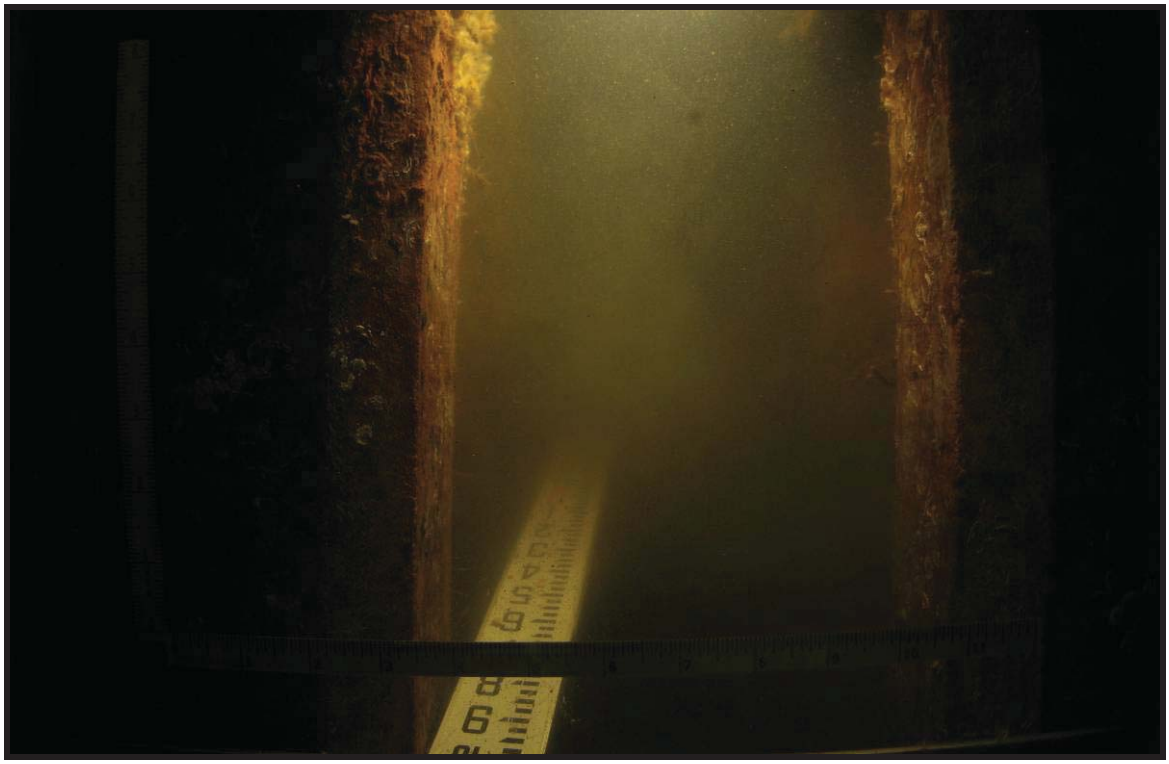

PHOTO 2.6-4. CEP175, Sta. 15+02: 9-1/2 in. wide gap between concrete sheet piles, with large upland void, elev. -18 ft.

PHOTO 2.6-5. CEP175, Sta. 6+31: Typical minor condition of concrete pile cap and fascia, looking from Pier 3T north.

PHOTO 2.6-6. CEP175, Sta. 21+52: 1/4 in. wide crack in top of concrete fascia, looking south.

PHOTO 2.6-7. CEP175, Sta. 3+78: Minor impact spall in top of concrete pile cap and fascia.

PHOTO 2.6-8. CEP175, Sta. 16+85 to 17+83: Large spalling with exposed reinforcing at top of concrete pile cap and fascia, looking north.

PHOTO 2.6-9. CEP175, Sta. 8+89: Large spall with exposed reinforcing in top of concrete pile cap and fascia, looking west.

PHOTO 2.6-10. CEP175, Sta. 13+55: Minor sinkhole in deck at expansion joint, looking west.

PHOTO 2.6-11. CEP175, Sta. 21+30, Cleat C-4: Typical minor cracking of mooring foundation, with moderate corrosion of fitting, looking north.

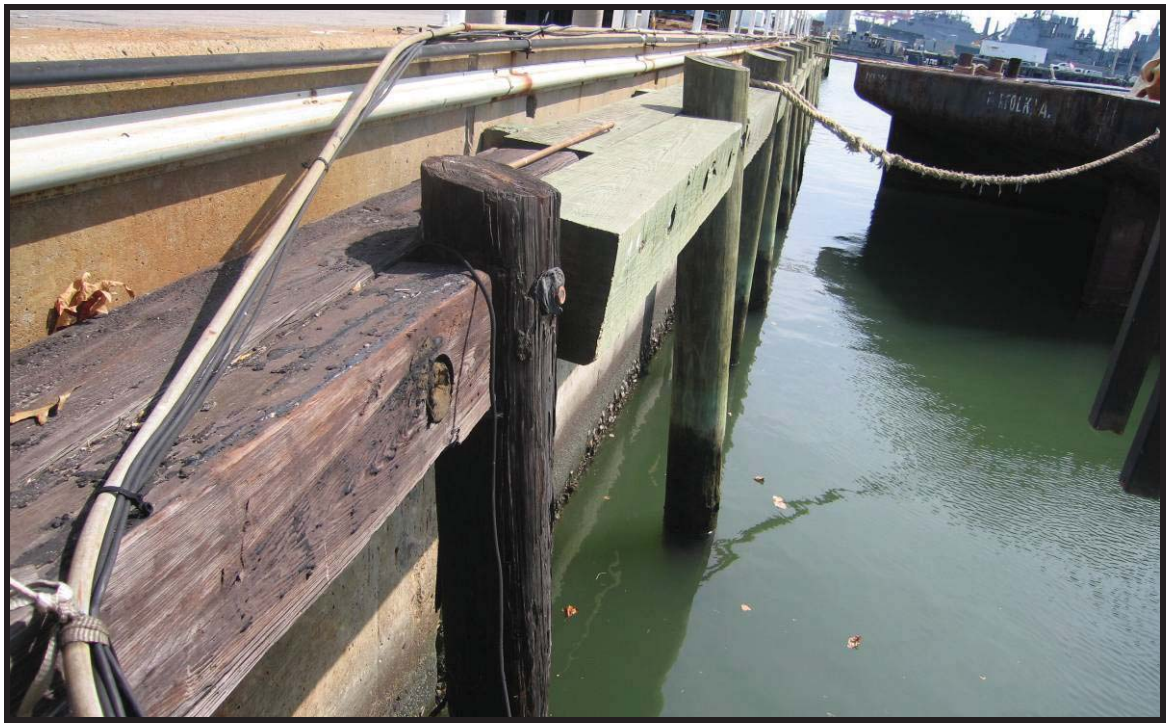

PHOTO 2.6-12. CEP175: Intact timber fender system on north face of wharf, from Pier 5T looking west.

PHOTO 2.6-13. CEP175, Sta. 22+00 to 24+00: Broken timber fender piles, chocks and wales, looking southeast.

PHOTO 2.6-14. CEP175, Sta. 22+30, Cleat C-6: Cleat anchors are loose at bulkhead, looking north.

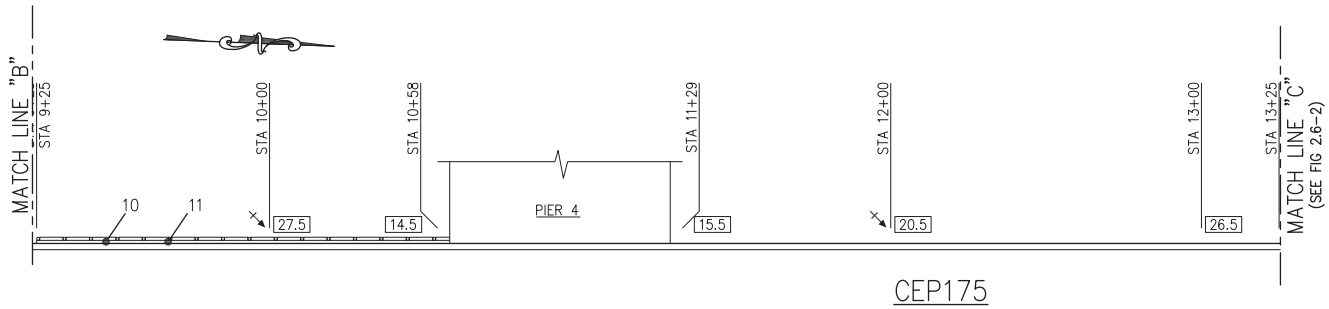


CEP175

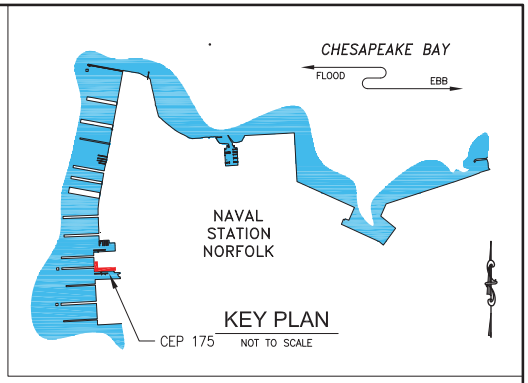


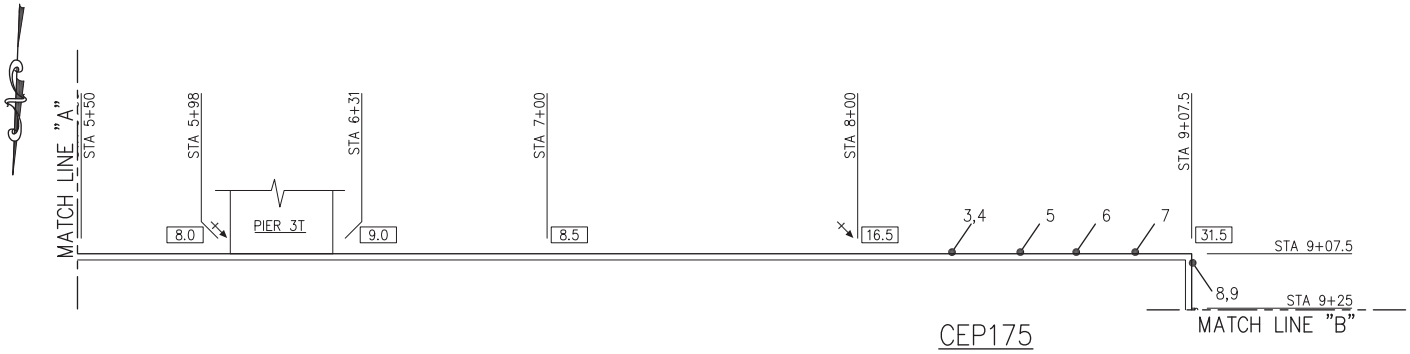


CEP175

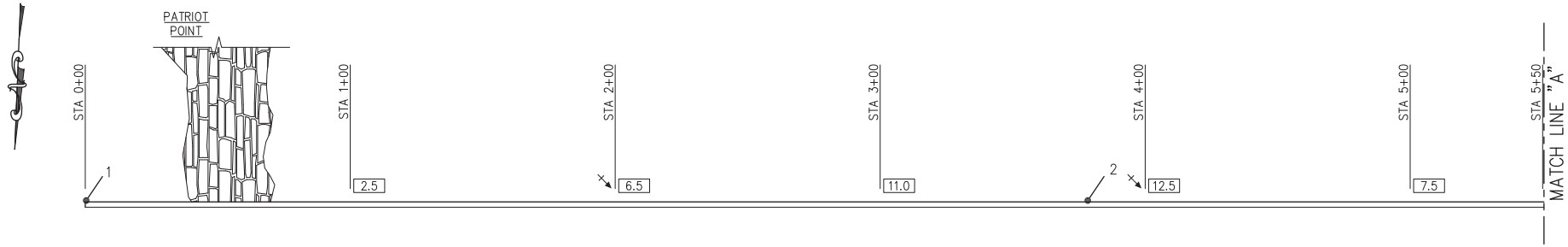


CEP175

## LEGEND

- LEVEL II INSPECTION
- 36.0 — MUDLINE ELEVATION BELOW MLLW, REFERENCED TO MLLW = 0.00'.
- 1 — DEFICIENCY ID

| | | | | |
|---|---|---|---|---|
| NAVFAC | GRAPHIC SCALE 1"=40' 0 40 80 FT. | DATE MAY 2008 | HPA Contract Number N62473-06-D-3029 | NAVAL FACILITIES ENGINEERING SERVICE CENTER EAST COAST DETACHMENT WASHINGTON D.C. — NAVAL STATION NORFOLK, NORFOLK, VA — CEP175 BULKHEAD PLAN (1 OF 2) — FIG. NO. 2.6-1 |

P:\Active Projects\DNAVY 701 - 703 - NAVSTA Norfolk\26 - Reports\26.3 - Final (Submitted 5-14-08)\26.4.3 - Figures\DNAVY702-F002-06-1.dwg 05/12/08 15:23 Martine2MA

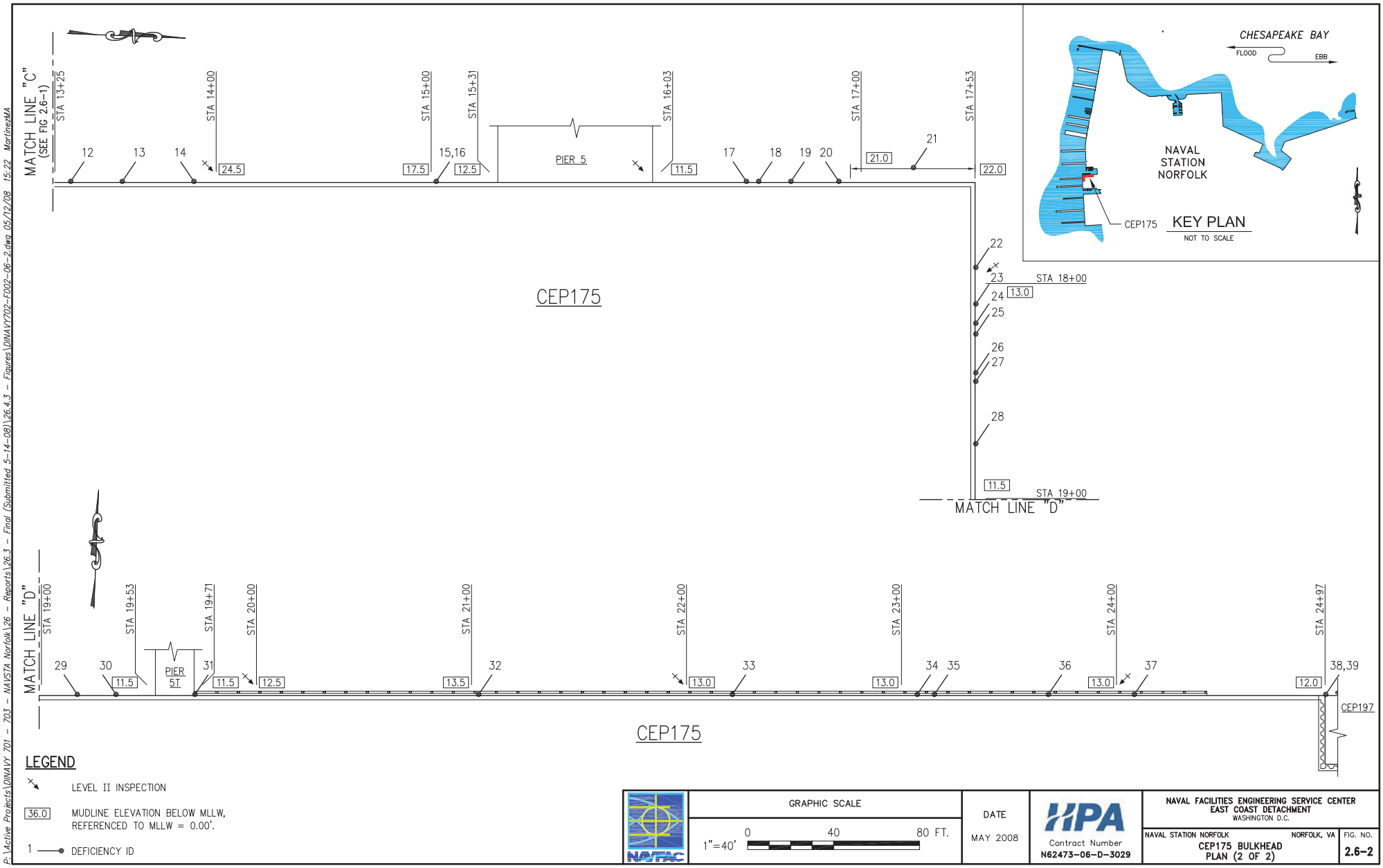


## LEGEND

LEVEL II INSPECTION

36.0 MUDLINE ELEVATION BELOW MLLW, REFERENCED TO MLLW = 0.00'.

1 DEFICIENCY ID

| | | | | |
|---|---|---|---|---|
| NAVFAC | GRAPHIC SCALE 1"=40' 0 40 80 FT. | DATE MAY 2008 | HPA Contract Number N62473-06-D-3029 | NAVAL FACILITIES ENGINEERING SERVICE CENTER EAST COAST DETACHMENT WASHINGTON D.C. |
| | | | | NAVAL STATION NORFOLK NORFOLK, VA CEP175 BULKHEAD PLAN (2 OF 2) FIG. NO. 2.6-2 |

P:\Active Projects\DNAVY 701 - 703 - NAVSTA Norfolk\26 - Reports\26.3 - Final (Submitted 5-14-08)\26.4.3 - Figures\DNAVY702-F002-06-2.dwg 05/12/08 15:22 MartinezMA

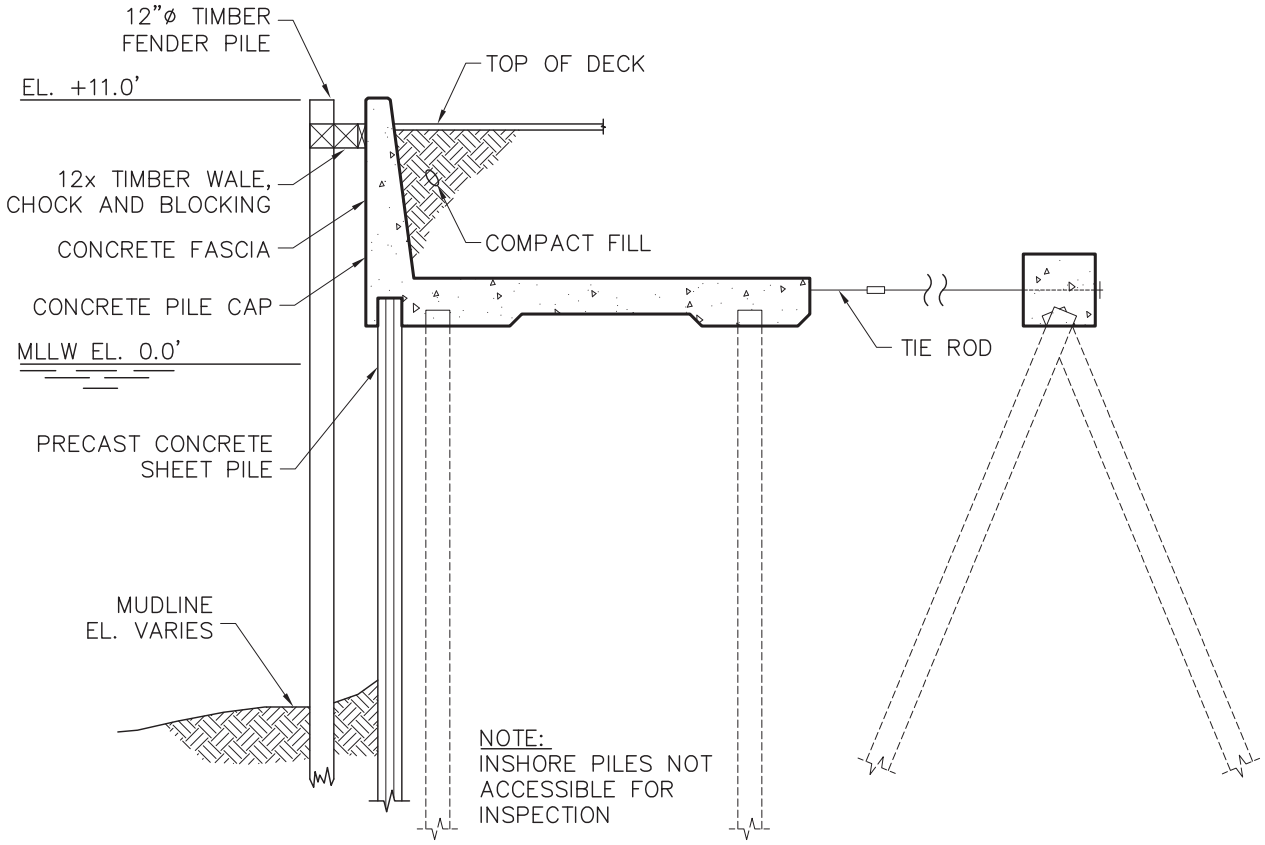


GRAPHIC SCALE

0 5 10 15 FT.

1/8"=1'-0"

DATE

MAY 2008

Contract Number
N62473-06-D-3029

NAVAL FACILITIES ENGINEERING SERVICE CENTER
EAST COAST DETACHMENT
WASHINGTON, D.C.

NAVAL STATION NORFOLK NORFOLK, VA

CEP175 BULKHEAD
TYPICAL SECTION

FIG. NO.
2.6-3

P:\Active Projects\DINAVY 701 - 703 - NAVSTA Norfolk\26 - Reports\26.3 - Final (Submitted 5-14-08)\26.4.3 - Figures\DINAVY702-F002-06-3.dwg 05/12/08 15:19 MartinezMA

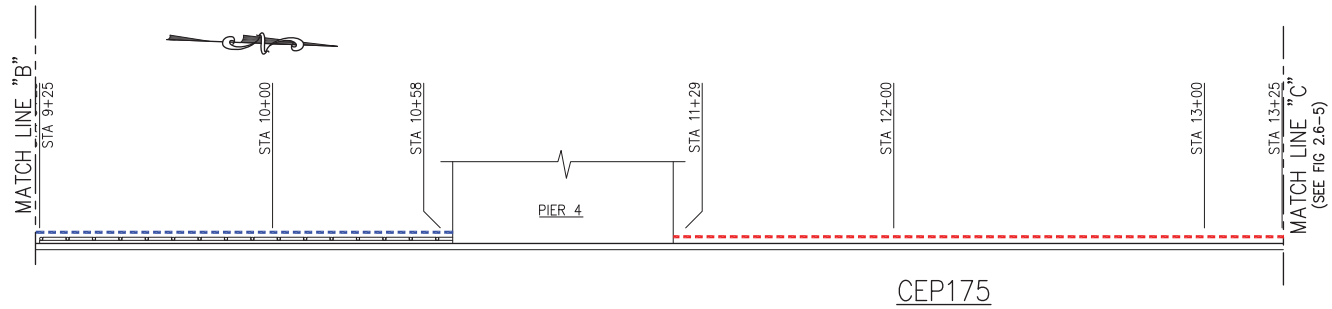


CEP175

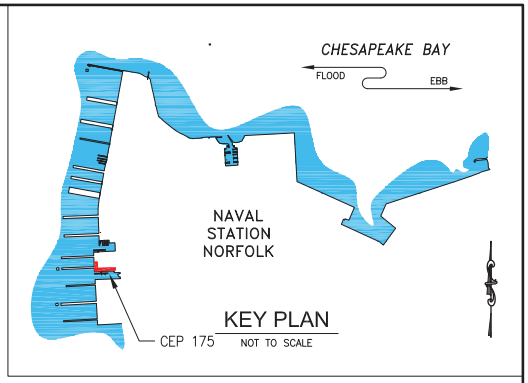


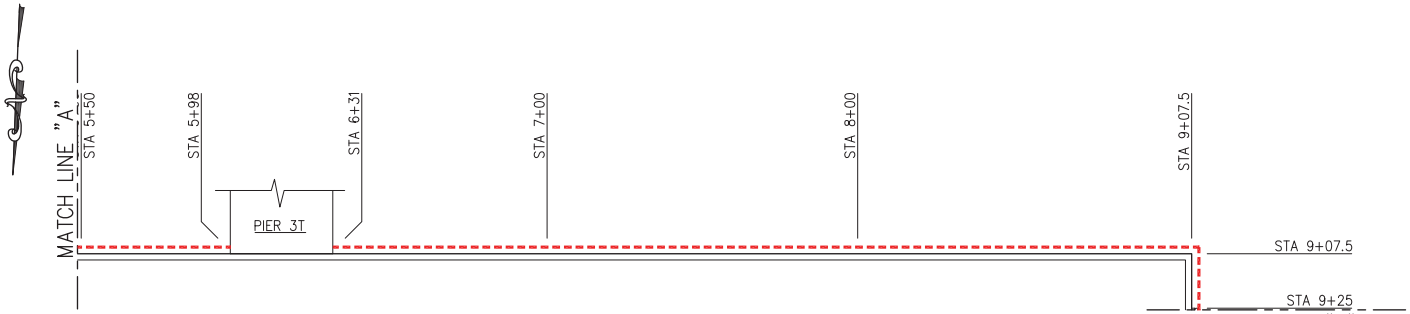


CEP175

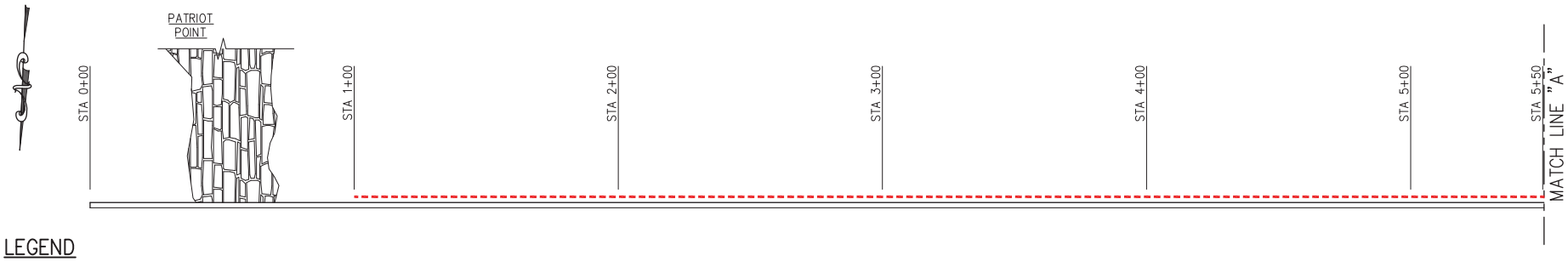


CEP175

## LEGEND

- FENDER SYSTEM IN GOOD OPERATIONAL CONDITION
- FENDER SYSTEM WITH MINOR DETERIORATION, REPAIR ON A NON-PRIORITY BASIS
- FENDER SYSTEM WITH MODERATE DETERIORATION, REPAIR ON A PRIORITY BASIS
- FENDER SYSTEM WITH SEVERE DETERIORATION, REQUIRES IMMEDIATE REPAIRS. RESTRICT FROM USE UNTIL REPAIRS ARE COMPLETED

NAVFAC

GRAPHIC SCALE

1"=40' 0 40 80 FT.

DATE

MAY 2008

HPA

Contract Number
N62473-06-D-3029

NAVAL FACILITIES ENGINEERING SERVICE CENTER
EAST COAST DETACHMENT
WASHINGTON D.C.

NAVAL STATION NORFOLK — NORFOLK, VA

CEP175 BULKHEAD MOORING HARDWARE AND FENDER SYSTEM PLAN (2 OF 2)

FIG. NO. 2.6-4

P:\Active Projects\DNAVY 701 - 703 - NAVSTA Norfolk\26 - Reports\26.3 - Final (Submitted 5-14-08)\26.4.3 - Figures\DNAVY702-F002-06-4.dwg 05/12/08 15:18 MartineMA

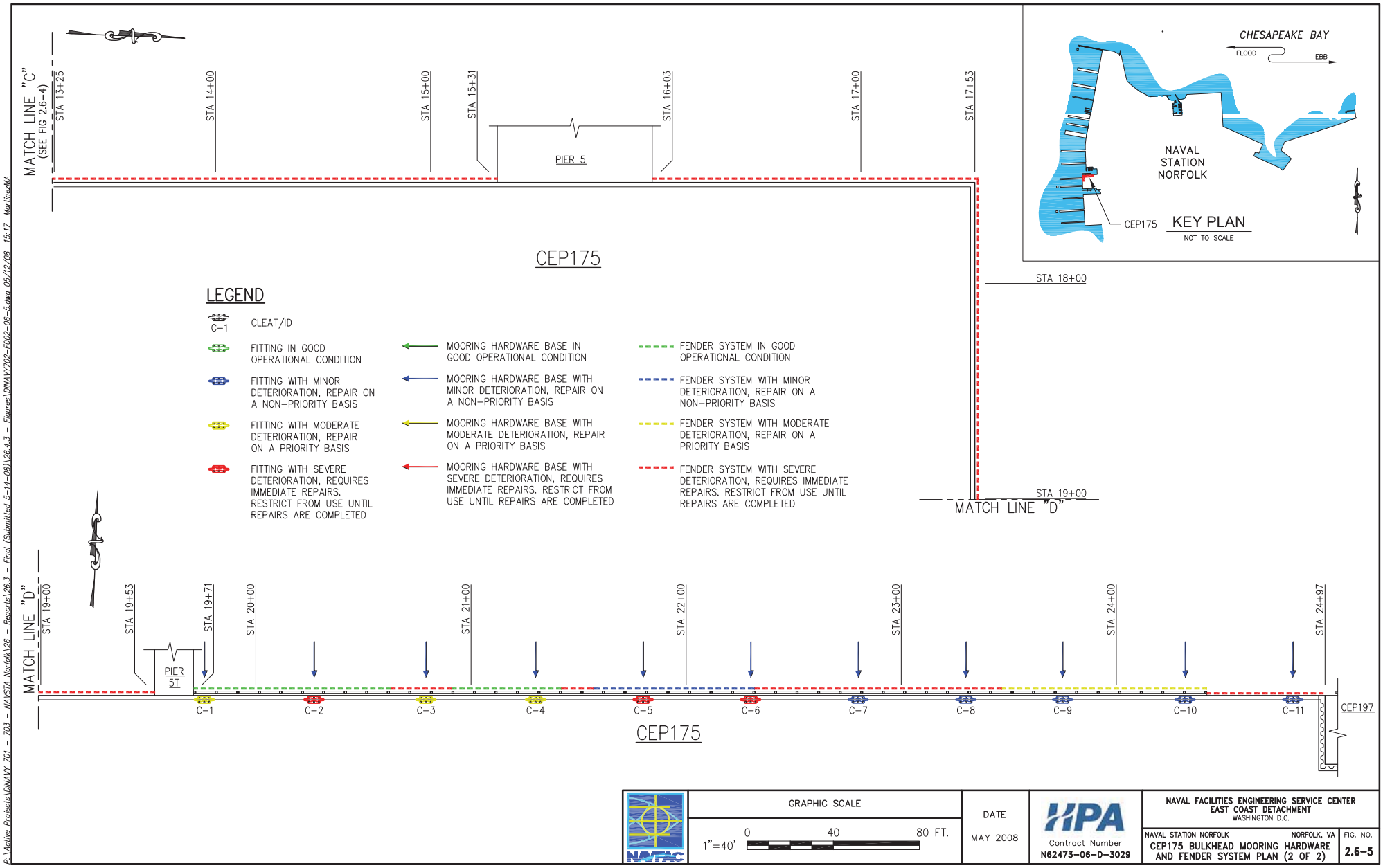


| | | | | |
|---|---|---|---|---|
| NAVFAC | GRAPHIC SCALE 1"=40' 0 40 80 FT. | DATE MAY 2008 | HPA Contract Number N62473-06-D-3029 | NAVAL FACILITIES ENGINEERING SERVICE CENTER EAST COAST DETACHMENT WASHINGTON D.C. |
| | | | | NAVAL STATION NORFOLK NORFOLK, VA CEP175 BULKHEAD MOORING HARDWARE AND FENDER SYSTEM PLAN (2 OF 2) |
| | | | | FIG. NO. 2.6-5 |

P:\Active Projects\DNAVY 701 - 703 - NAVSTA Norfolk\26 - Reports\26.3 - Final (Submitted 5-14-08)\26.4.3 - Figures\DNAVY702-F002-06-5.dwg 05/12/08 15:17 MartineMA

## LEGEND

C-1 CLEAT/ID

- FITTING IN GOOD OPERATIONAL CONDITION
- FITTING WITH MINOR DETERIORATION, REPAIR ON A NON-PRIORITY BASIS
- FITTING WITH MODERATE DETERIORATION, REPAIR ON A PRIORITY BASIS
- FITTING WITH SEVERE DETERIORATION, REQUIRES IMMEDIATE REPAIRS. RESTRICT FROM USE UNTIL REPAIRS ARE COMPLETED
- MOORING HARDWARE BASE IN GOOD OPERATIONAL CONDITION
- MOORING HARDWARE BASE WITH MINOR DETERIORATION, REPAIR ON A NON-PRIORITY BASIS
- MOORING HARDWARE BASE WITH MODERATE DETERIORATION, REPAIR ON A PRIORITY BASIS
- MOORING HARDWARE BASE WITH SEVERE DETERIORATION, REQUIRES IMMEDIATE REPAIRS. RESTRICT FROM USE UNTIL REPAIRS ARE COMPLETED
- FENDER SYSTEM IN GOOD OPERATIONAL CONDITION
- FENDER SYSTEM WITH MINOR DETERIORATION, REPAIR ON A NON-PRIORITY BASIS
- FENDER SYSTEM WITH MODERATE DETERIORATION, REPAIR ON A PRIORITY BASIS
- FENDER SYSTEM WITH SEVERE DETERIORATION, REQUIRES IMMEDIATE REPAIRS. RESTRICT FROM USE UNTIL REPAIRS ARE COMPLETED

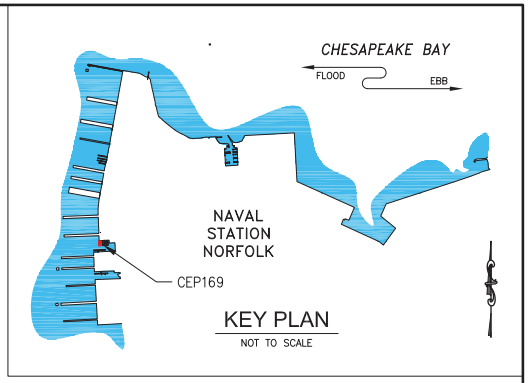


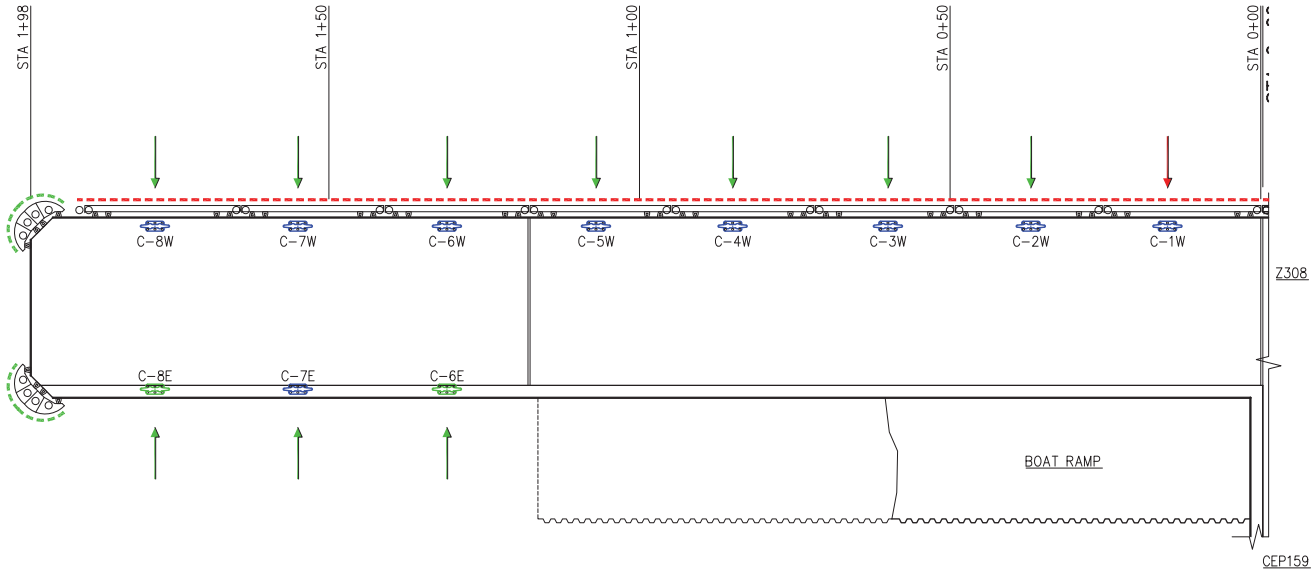


CEP169

| | | | | |
|---|---|---|---|---|
| NAVFAC | GRAPHIC SCALE 1"=20' 0 20 40 FT. | DATE MAY 2008 | HPA Contract Number N62473-06-D-3029 | NAVAL FACILITIES ENGINEERING SERVICE CENTER EAST COAST DETACHMENT WASHINGTON D.C. — NAVAL STATION NORFOLK, NORFOLK, VA — CEP169 BREAKWATER MOORING HARDWARE AND FENDER SYSTEM PLAN — FIG. NO. 2.9-3 |

P:\Active Projects\DNAVY 701 - 703 - NAVSTA Norfolk\26 - Reports\26.3 - Final (Submitted 5-14-08)\26.4.3 - Figures\DNAVY702-F002-09-3.dwg 05/12/08 15:08 MartinezMA

## 2.10 Z308 BULKHEAD AND PLATFORM CONDITION INDEX - 60

The Scope of Work for this facility included both above water and underwater inspections of the structural systems and the mooring hardware. The Z308 Bulkhead and Platform is in fair condition. The Operational Capability Rating is C-2 and the Condition Index is 60.

The Z308 Bulkhead has been replaced and a new relieving platform has been constructed since the last inspection, therefore there are no previously recommended repairs.

The deficiencies of the various structural components are tabulated in Appendix A – Structural Data. The locations of the deficiencies and a typical section are shown on Fig 2.10-1 and Fig 2.10-2, respectively, and Photo 2.10-1 shows an overall view of the facility.

Each asset is assessed and assigned a numerical Condition Index (CI), ranging from 1 (failed) to 100 (good) in accordance with Table 1-1 – Definition of Condition Index (CI).

### 2.10.1 - OBSERVED CONDITIONS AND ASSESSMENT

**H1010 SUBSTRUCTURE** **Condition Index – 75**

**H101001 – PILE FOUNDATIONS** **CI - 75**

The concrete sheet pile bulkhead is in satisfactory condition with intermittent open corrosion spalls and small gaps (Photos 2.10-2 and 2.10-3). There is one location where there is a large gaps between the concrete sheet piles with exposed fill. The concrete piles at the relieving platform are generally in good condition with intermittent minor deficiencies associated with driving damage (Photo 2.10-4).

**H101002 – PILE CAPS** **CI - 90**

The concrete caps, framing and deck soffit at the relieving platform are in good condition.

## H1030 – DECK COMPONENTS Condition Index – 75

### H103001 – DECK CI - 60

The top of the concrete deck at the relieving platform is in fair condition (Photo 2.10-5); with isolated minor impact spalls on the curb (Photo 2.10-6), and two locations where there are sinkholes immediately upland of the concrete sheet pile bulkhead (Photos 2.10-7 and 2.10-8). There is no related gap in the concrete sheet piles and no obvious cause for the sinkholes. The north end of the Z308 platform is still under construction (Photo 2.10-9)

### H103002 – MOORING FOUNDATIONS CI - 90

The mooring hardware foundations are in good condition with no notable deficiencies (Photo 2.10-10).

## H1040 – MOORING & BERTHING SYSTEMS Condition Index – 75

### H104001 – PRIMARY FENDER SYSTEM CI - 60

The steel and composite fender system is in fair condition with numerous missing and detached components (Photo 2.10-11).

### H104005 – MOORING HARDWARE CI - 90

The mooring hardware elements are in good condition with only isolated minor surface corrosion of the fittings (Photo 2.10-12).

A summary of the overall condition of the mooring fittings for the Z308 Bulkhead and Platform is presented in Table 2.10-1. The location of each of the individual mooring fittings is shown on Fig 2.10-3.

**TABLE 2.10-1**
**Summary of Z308 Mooring Hardware Condition**

| FACILITY | FITTING ID NUMBER | STATION | MOORING HARDWARE TYPE | DESIGN CAPACITY (TONS) [1] | CONDITION | |
|---|---|---|---|---|---|---|
| | | | | | FITTING | BASE |
| Z308 | C-1 | 0+13 | 42 in. Cleat | 20 | 2 | 1 |
| Z308 | C-2 | 0+63 | 42 in. Cleat | 20 | 2 | 1 |
| Z308 | B-1 | 1+08 | Large Bollard | 35 | 2 | 1 |

| FACILITY | FITTING ID NUMBER | STATION | MOORING HARDWARE TYPE | DESIGN CAPACITY (TONS) [1] | CONDITION | |
|---|---|---|---|---|---|---|
| | | | | | FITTING | BASE |
| Z308 | C-3 | 1+56 | 42 in. Cleat | 20 | 2 | 1 |
| Z308 | C-4 | 2+05 | 42 in. Cleat | 20 | 2 | 1 |
| Z308 | C-5 | 3+62 | 42 in. Cleat | 20 | 2 | 1 |
| Z308 | C-6 | 4+09 | 42 in. Cleat | 20 | 2 | 1 |
| Z308 | B-2 | 4+55 | Large Bollard | 35 | 2 | 1 |
| Z308 | C-7 | 5+02 | 42 in. Cleat | 20 | 2 | 1 |
| Z308 | C-8 | 5+27 | 42 in. Cleat | 20 | 2 | 1 |
| Z308 | C-9 | 5+75 | 42 in. Cleat | 20 | 2 | 1 |
| Z308 | B-3 | 6+20 | Large Bollard | 35 | 2 | 1 |
| Z308 | C-10 | 6+68 | 42 in. Cleat | 20 | 2 | 1 |
| Z308 | C-11 | 6+94 | 42 in. Cleat | 20 | 2 | 1 |
| Z308 | B-4 | 7+38 | Large Bollard | 35 | 2 | 1 |
| Z308 | C-12 | 7+86 | 42 in. Cleat | 20 | 2 | 1 |
| Z308 | C-13 | 8+33 | 42 in. Cleat | 20 | 2 | 1 |
| Z308 | C-14 | 8+60 | 42 in. Cleat | 20 | 2 | 1 |
| Z308 | B-5 | 9+06 | Large Bollard | 35 | 1 | 1 |
| Z308 | C-15 | 9+52 | 42 in. Cleat | 20 | 2 | 1 |
| Z308 | C-16 | 10+03 | 42 in. Cleat | 20 | 2 | 1 |

CONDITION RATING KEY

1 = 1 = GOOD CONDITION

2 = 2 = MINOR DETERIORATION

3 = 3 = MODERATE DETERIORATION

4 = 4 = SEVERE DETERIORATION

1. Represents nominal capacity. Values are estimated based on comparison to similar sized fittings from UFC 4-150-08, 01 April 2001, “Table 2-1. Commonly Used U.S. Navy Pier Mooring Fittings.”

PHOTO 2.10-1. Overall view of Z308 Bulkhead and Platform from southern end looking north.

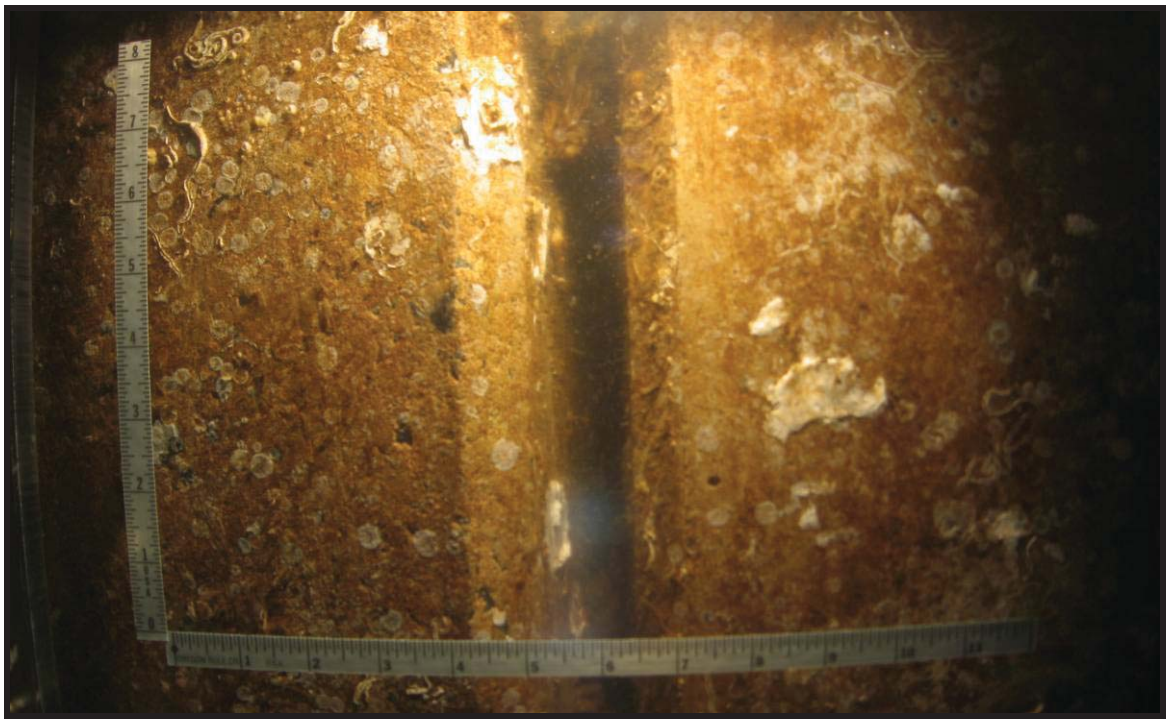

PHOTO 2.10-2. Z308, Sta. 8+60: Typical good condition on concrete sheet piles, elev. -8 ft.

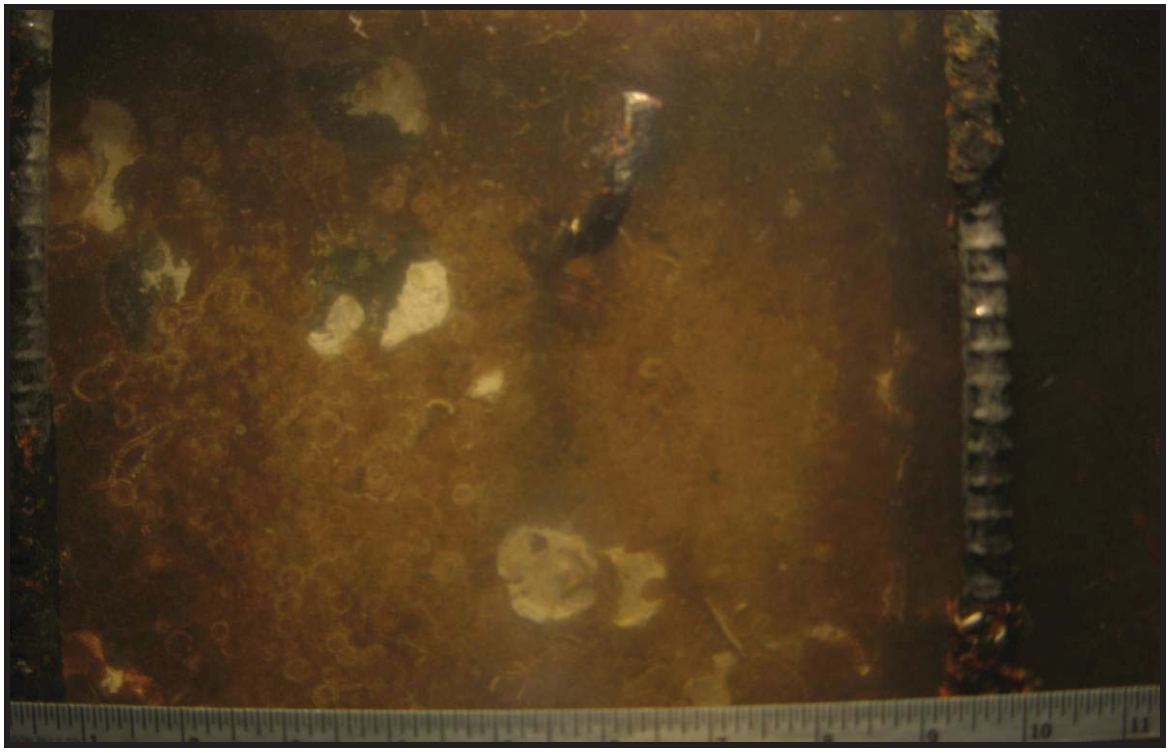

PHOTO 2.10-3. Z308, Sta. 8+17: Spall or unfinished construction at interior corner of bulkhead with exposed reinforcing, elev. -6 ft.

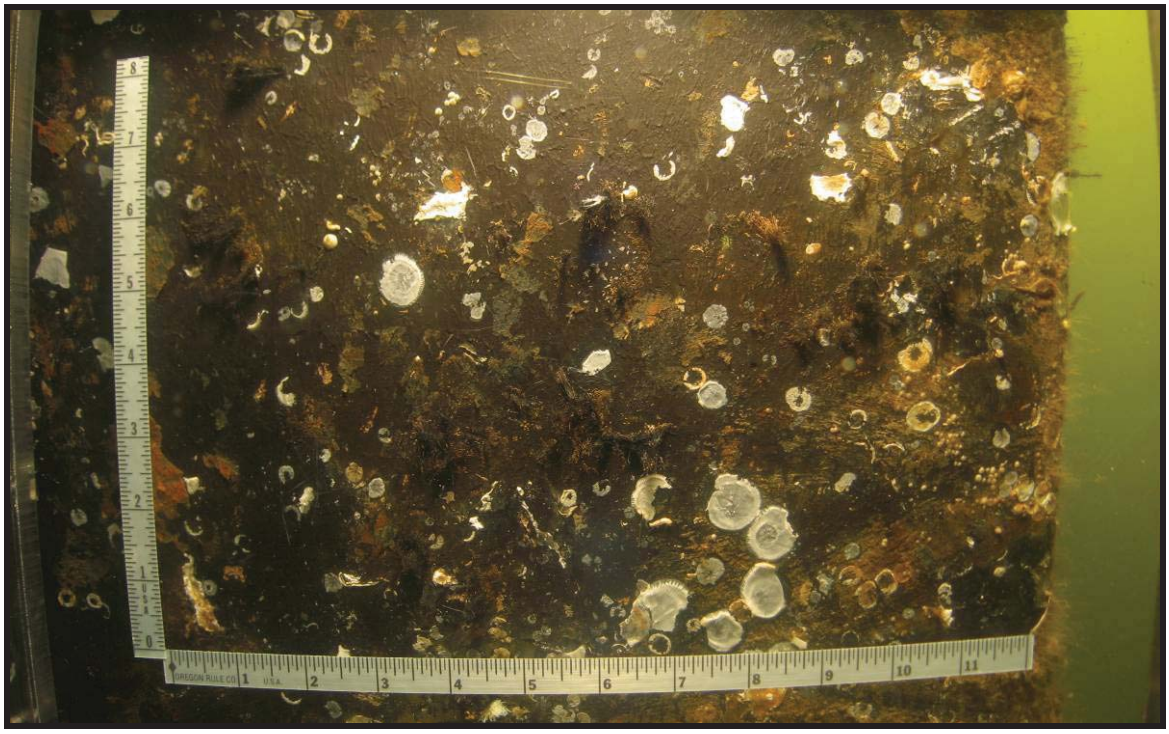

PHOTO 2.10-4. Z308, Pile 1A: Typical good condition of concrete bearing piles at relieving platform, elev. -8 ft.

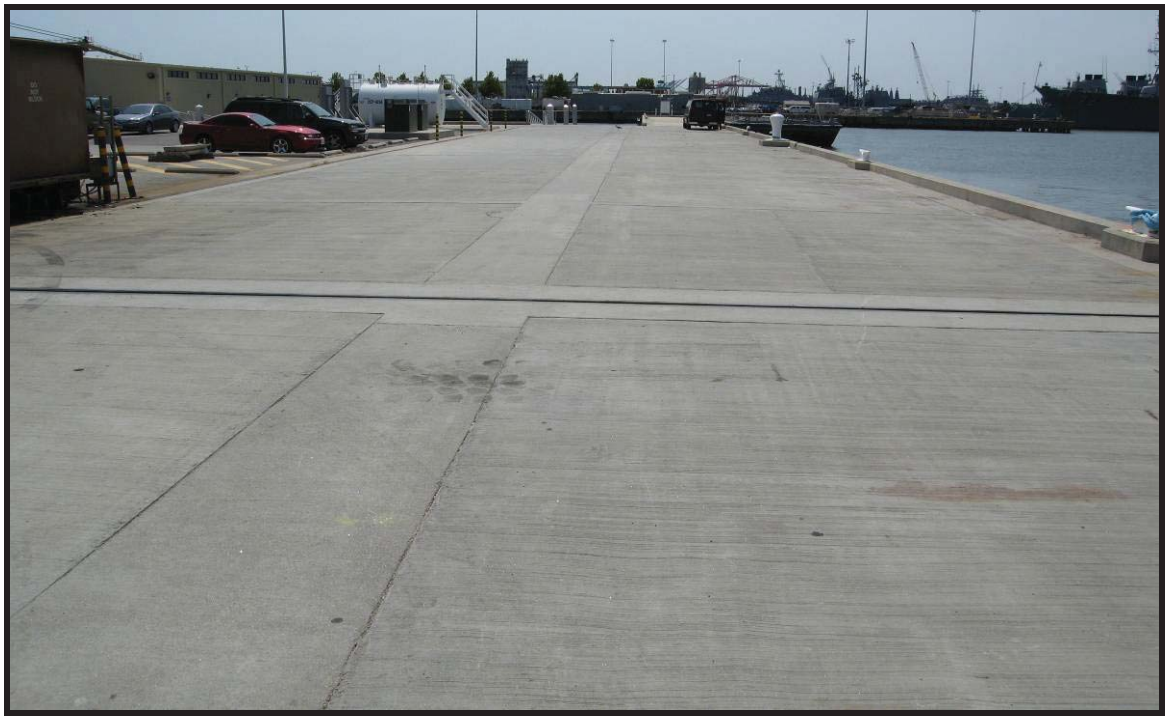

PHOTO 2.10-5. Z308: Typical good condition of concrete deck of relieving platform, from Pier 6 looking south.

PHOTO 2.10-6. Z308, Sta. 0+26: Typical minor impact spall at edge of deck curb, looking east.

PHOTO 2.10-7. Z308, Sta. 6+00: Sinkhole at upland edge of bulkhead, void beneath extends beyond all sides of hole, looking northwest.

PHOTO 2.10-8. Z308, Sta. 8+00: Sinkhole at upland edge of bulkhead, looking northwest.

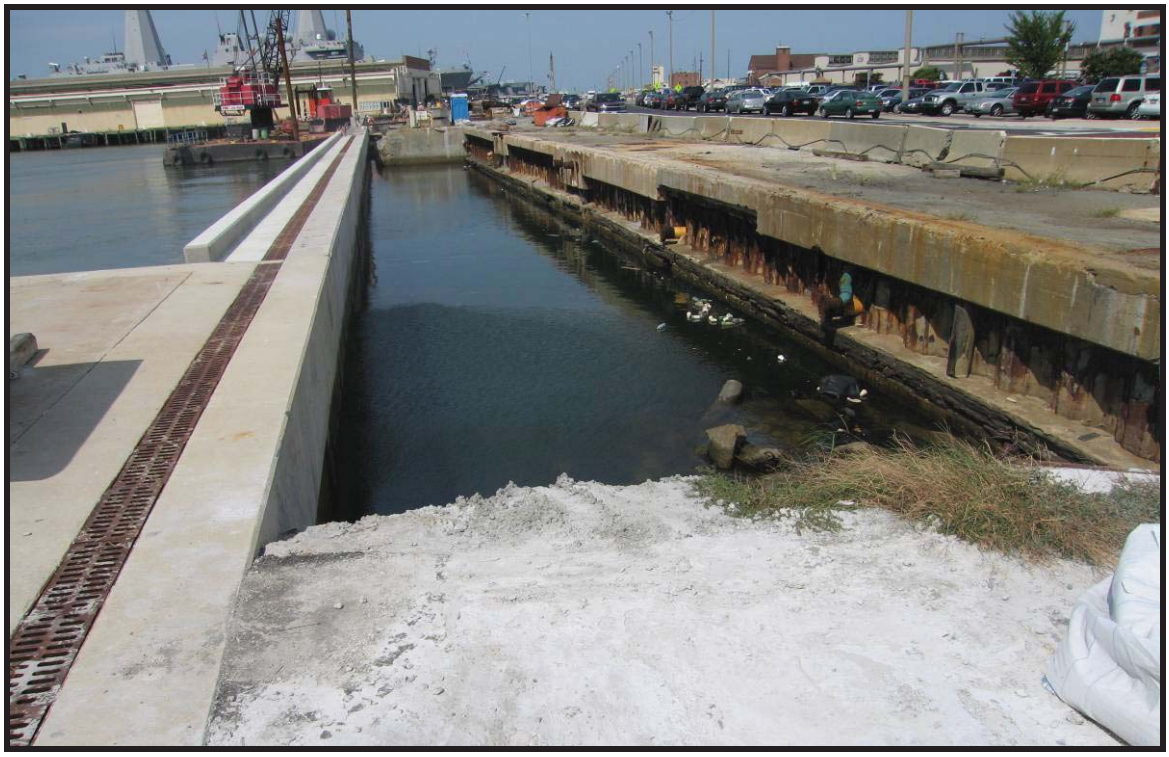

PHOTO 2.10-9. Z308: Northern limit of facility under construction.

PHOTO 2.10-10. Z308, Sta. 4+55, Bollard B-2: Typical good condition of mooring foundations and fittings, looking west.

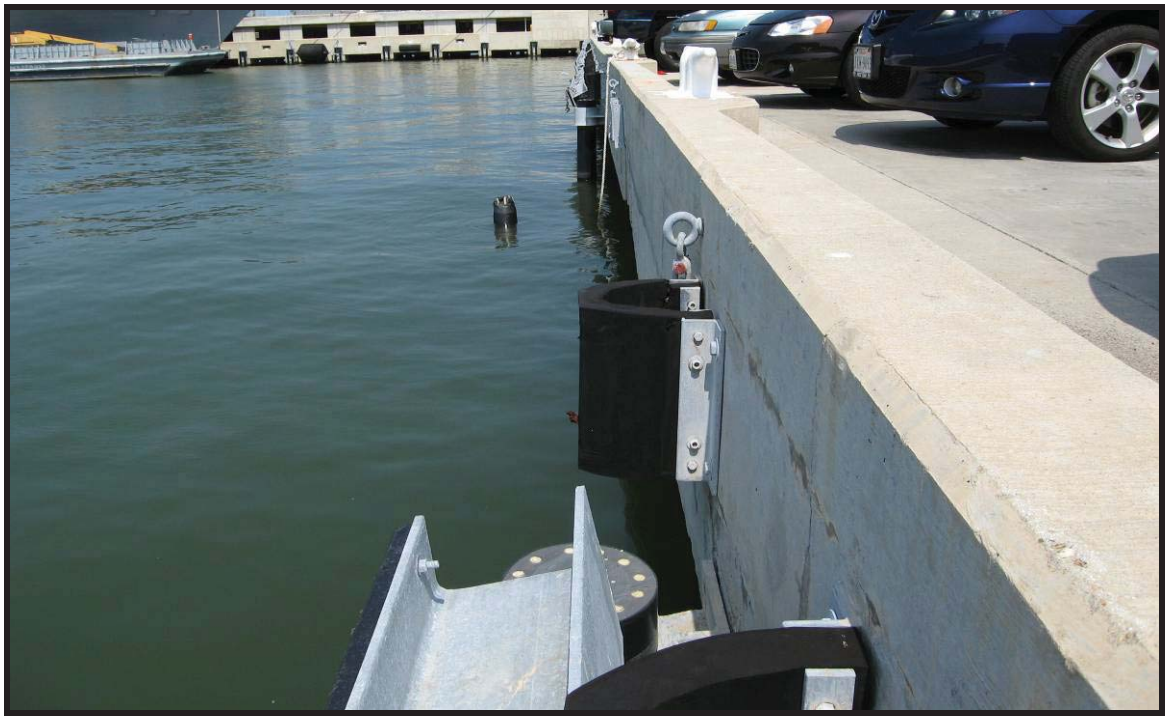

PHOTO 2.10-11. Z308, Sta. 0+00: Steel and composite fender system is detached along most of facility length, looking north.

PHOTO 2.10-12. Z308, Sta. 0+13, Cleat C-1: Worst case minor surface corrosion of fittings.

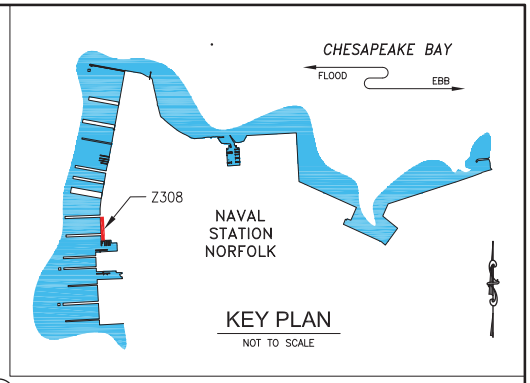


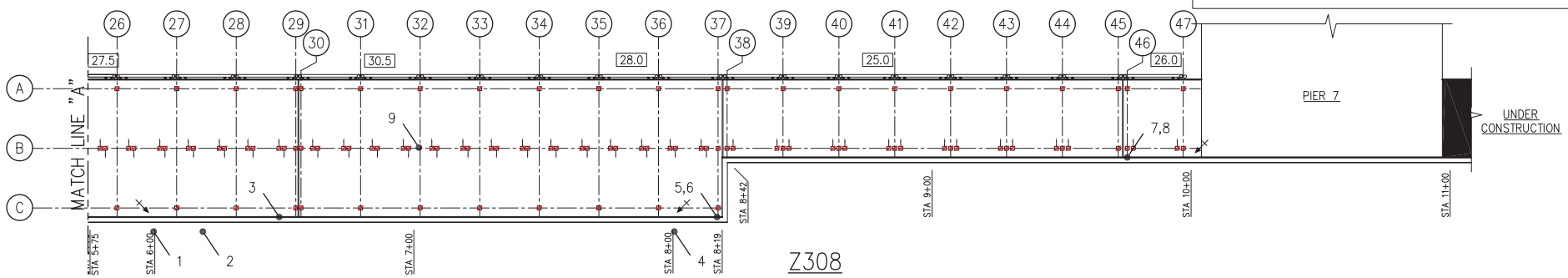


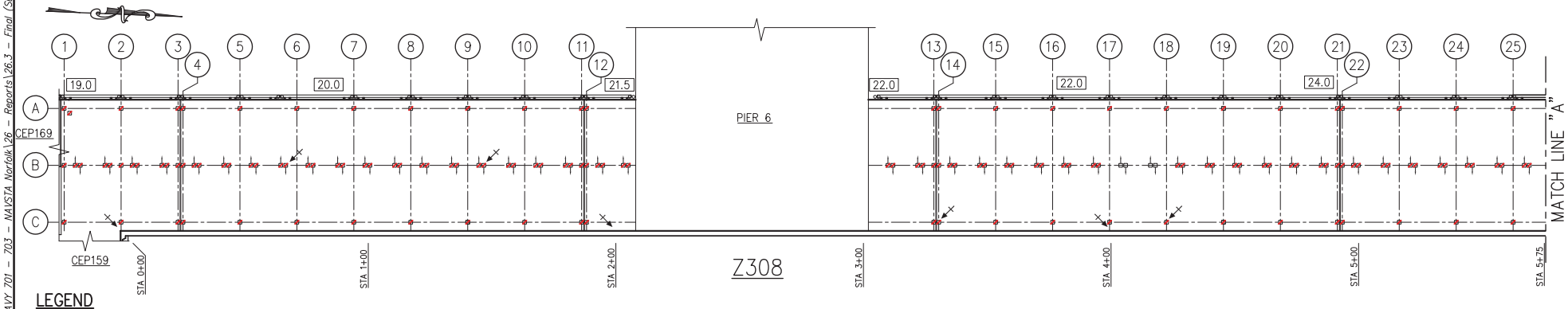


## LEGEND

- LEVEL II INSPECTION
- 36.0 MUDLINE ELEVATION BELOW MLLW, REFERENCED TO MLLW = 0.00'.
- 1 DEFICIENCY ID
- CONCRETE PILE
- CONCRETE BATTER PILE
- CONCRETE PILE RATED MINOR
- CONCRETE PILE RATED MODERATE
- CONCRETE PILE RATED MAJOR
- CONCRETE PILE RATED SEVERE

GRAPHIC SCALE: 1"=40' — 0 40 80 FT.

DATE: MAY 2008

HPA Contract Number N62473-06-D-3029

NAVAL FACILITIES ENGINEERING SERVICE CENTER
EAST COAST DETACHMENT
WASHINGTON D.C.

NAVAL STATION NORFOLK — NORFOLK, VA

Z308 BULKHEAD AND PLATFORM PLAN

FIG. NO. 2.10-1

P:\Active Projects\DNAVY 701 – 703 – NAVSTA Norfolk\26 – Reports\26.3 – Final (Submitted 5-14-08)\26.4.3 – Figures\DNAVY702-F002-10-1.dwg 05/12/08 17:52 MartinezMA

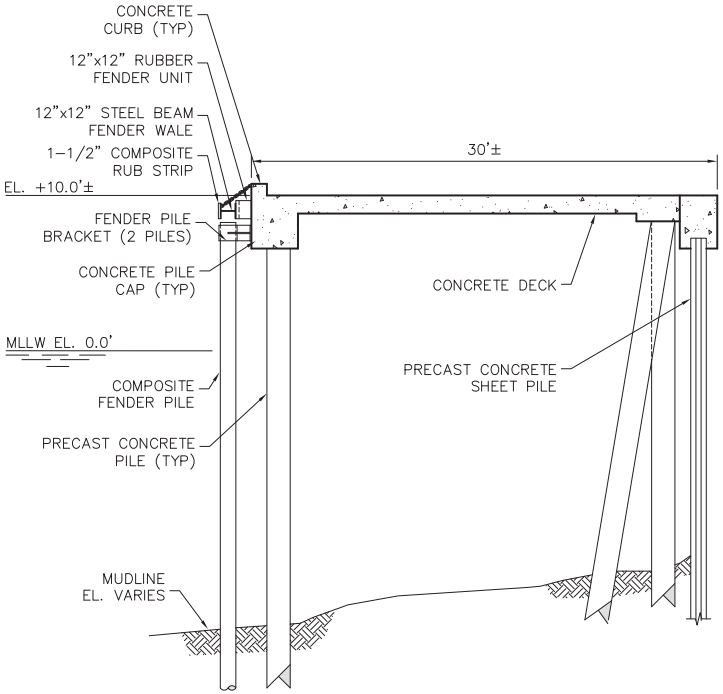


TYPICAL SECTION – BENTS 1 TO 37
1/8" = 1'-0"

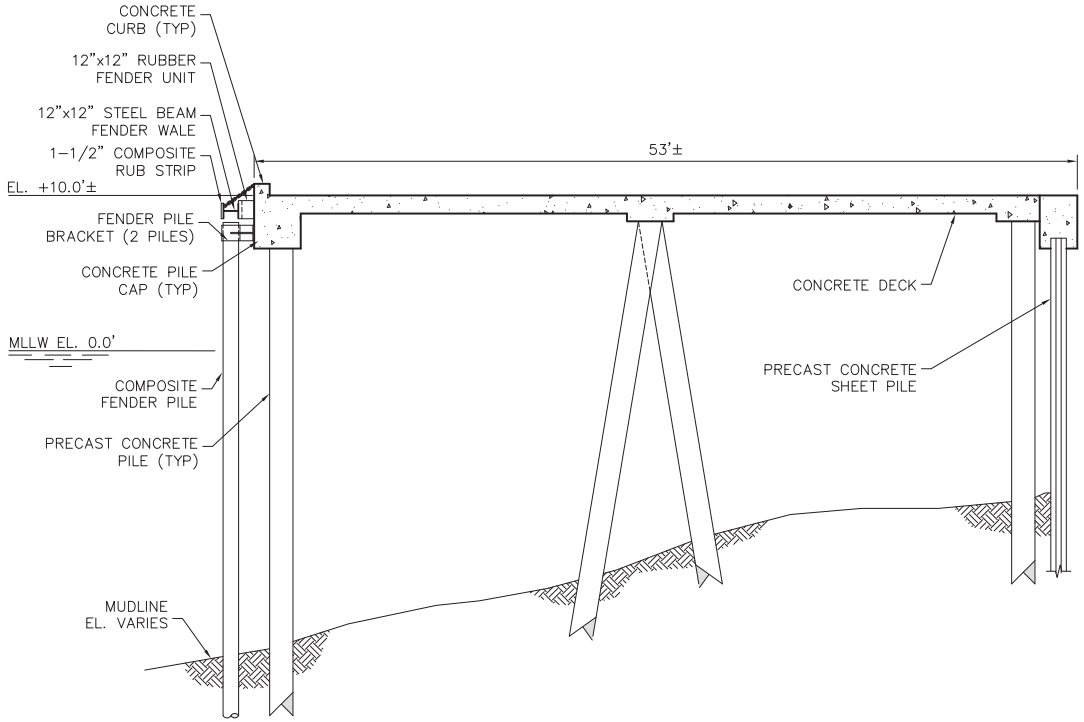


TYPICAL SECTION – BENTS 38 TO 47
1/8" = 1'-0"

| | | | | |
|---|---|---|---|---|
| NAVFAC | GRAPHIC SCALE<br>1/8"=1'-0" 0 5 10 15 FT. | DATE<br>MAY 2008 | HPA<br>Contract Number<br>N62473-06-D-3029 | NAVAL FACILITIES ENGINEERING SERVICE CENTER<br>EAST COAST DETACHMENT<br>WASHINGTON D.C.<br>NAVAL STATION NORFOLK NORFOLK, VA<br>Z308 BULKHEAD AND PLATFORM<br>TYPICAL SECTIONS<br>FIG. NO. 2.10-2 |

P:\Active Projects\DINAVY 701 – 703 – NAVSTA Norfolk\26 – Reports\26.3 – Final (Submitted 5-14-08)\26.4.3 – Figures\DINAVY702-F002-10-2.dwg 05/12/08 17:49 MartinezMA

## LEGEND

C-1 CLEAT/ID

B-1 BOLLARD/ID

FITTING IN GOOD OPERATIONAL CONDITION

FITTING WITH MINOR DETERIORATION, REPAIR ON A NON-PRIORITY BASIS

FITTING WITH MODERATE DETERIORATION, REPAIR ON A PRIORITY BASIS

FITTING WITH SEVERE DETERIORATION, REQUIRES IMMEDIATE REPAIRS. RESTRICT FROM USE UNTIL REPAIRS ARE COMPLETED

MOORING HARDWARE BASE IN GOOD OPERATIONAL CONDITION

MOORING HARDWARE BASE WITH MINOR DETERIORATION, REPAIR ON A NON-PRIORITY BASIS

MOORING HARDWARE BASE WITH MODERATE DETERIORATION, REPAIR ON A PRIORITY BASIS

MOORING HARDWARE BASE WITH SEVERE DETERIORATION, REQUIRES IMMEDIATE REPAIRS. RESTRICT FROM USE UNTIL REPAIRS ARE COMPLETED

FENDER SYSTEM IN GOOD OPERATIONAL CONDITION

FENDER SYSTEM WITH MINOR DETERIORATION, REPAIR ON A NON-PRIORITY BASIS

FENDER SYSTEM WITH MODERATE DETERIORATION, REPAIR ON A PRIORITY BASIS

FENDER SYSTEM WITH SEVERE DETERIORATION, REQUIRES IMMEDIATE REPAIRS. RESTRICT FROM USE UNTIL REPAIRS ARE COMPLETED

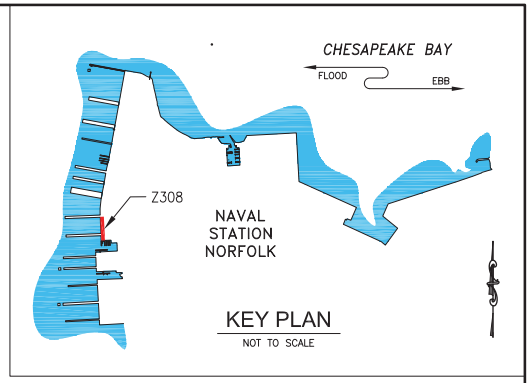


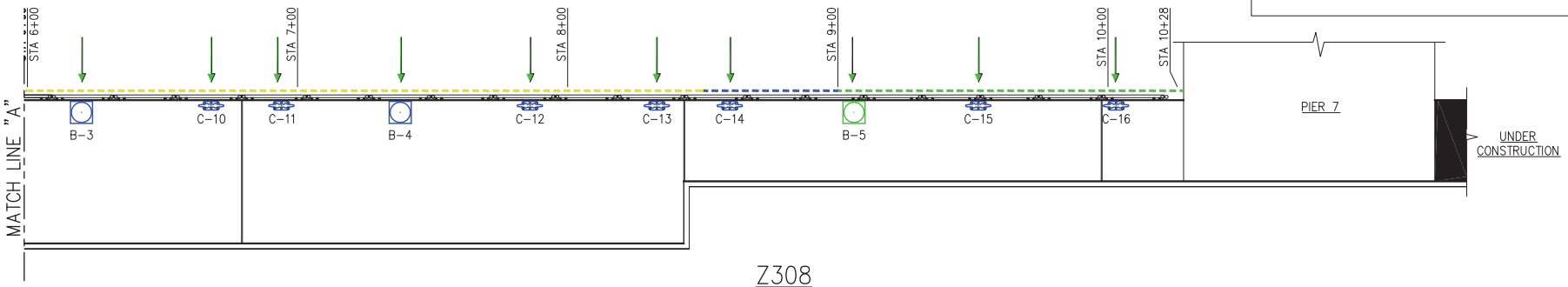


Z308

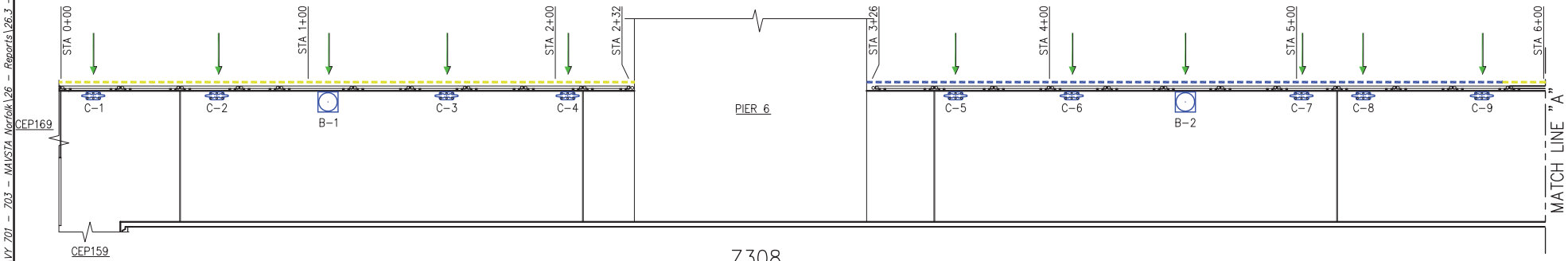


Z308

| | | | | |
|---|---|---|---|---|
| NAVFAC | GRAPHIC SCALE 1"=40' 0 40 80 FT. | DATE MAY 2008 | HPA Contract Number N62473-06-D-3029 | NAVAL FACILITIES ENGINEERING SERVICE CENTER EAST COAST DETACHMENT WASHINGTON D.C. |
| | | | | NAVAL STATION NORFOLK NORFOLK, VA Z308 BULKHEAD AND PLATFORM MOORING HARDWARE AND FENDER SYSTEM PLAN |
| | | | | FIG. NO. 2.10-3 |

P:\Active Projects\DNAVY 701 - 703 - NAVSTA Norfolk\26 - Reports\26.3 - Final (Submitted 5-14-08)\26.4.3 - Figures\DNAVY702-F002-10-3.dwg 05/12/08 17:53 MartineMA

ENGINEERING SERVICE CENTER
Port Hueneme, California 93043-4370

# ROUTINE WATERFRONT FACILITIES INSPECTIONS & ASSESSMENTS AT

# NAVAL STATION NORFOLK BULKHEADS NORFOLK, VIRGINIA

## Report # CR-6465-OCN (Volume 2 of 2)

May 2008

Prepared for

NFESC EAST COAST DET
Washington Navy Yard
Building 36, Suite 333
720 Kennon Street
Washington DC, 20374-5063

Prepared By:

22 Cortlandt Street, 33rd Fl.
New York, NY 10007

Distribution limited to U.S. Government agencies and their contractors; administrative/operational use. Other requests for this document shall be referred to the Naval Facilities Engineering Services Center.

ENGINEERING SERVICE CENTER
Port Hueneme, California 93043-4370

# ROUTINE WATERFRONT FACILITIES INSPECTIONS & ASSESSMENTS AT

# NAVAL STATION NORFOLK BULKHEADS NORFOLK, VIRGINIA

**REPORT # CR-6465-OCN**

May 2008

By:
HPA, Inc.
22 Cortlandt St, 33rd Fl.
New York, New York 10007

Under:
Contract No. N62473-06-D-3029
Delivery Order No. 006

Prepared for:
NFESC EAST COAST DETACHMENT
Washington Navy Yard
Building 36, Suite 333
720 Kennon Street, Suite 333
Washington DC, 20374

# APPENDIX A

# STRUCTURAL DATA

# APPENDIX A – STRUCTURAL DATA

## DEFECT RECORDING NOMENCLATURE

Assets: Pile (P); Pile-Batter (PB); Pile Cap (PC); Beam (B); Deck-Above (DA); Deck-Underside (DU); Mooring Fitting (MF); Mooring Foundation (MFD); Fender Pile (FP); Wale-Top (WT); Wale-Lower (WL); Chock-Top (CT); Chock-Lower (CL); Blocking (BL); Vault (V).

Pile Sides: Face (F); Corner (C); Quadrant (Q); Position (P) from top of pile to top of defect.
Pile Caps/Girders: Horizontal (H), Vertical (V), Area (A).
Deck: Parallel Dim. (X); Perpendicular Dim. (Y) to outboard end in feet.
Record H & V to the nearest 2 or 3 in; L, X & Y to the nearest 0.5 ft; A in SF or %.
At EMS Level, H may be entered as Bottom Corner (BC), Bottom Half (BH) or Bottom Full (BF).
At EMS Level, V may be entered as 9 in. for default.
Record Above Water Crack Widths (W) to nearest 1/16 in. minimum.
Record Underwater Crack Widths (W) to nearest 1/100 in. minimum with crack gauge.
Calculate Repair Depth (D) to the nearest 1 in. or use 6 in. for EMS default value.
All dimensions shall be rounded up. Items labeled TBD are To Be Determined.

## Defect Type

BRK: Breakage
CCS: Closed corrosion spall
OCS: Open corrosion spall
LCR: Longitudinal above water crack
HCR: Horizontal cracks
VCR: Vertical underwater cracks
OSC: Overstressing cracks
ABS: Abrasion damage
SPL: Split
FUN: Fungal Decay
MBD: Marine Borer Damage
CRD: Corrosion Damage
SFT: Soft concrete underwater (Conc U/W)
ER1: Conc U/W Cracking & Erosion <1/4 in.
ER2: Conc U/W Erosion/volume loss >1/4 in.
ER3: Conc U/W Erosion/volume loss w/
CMS: Closed mechanical/overload spall
OMS: Open mechanical/overload spall
OMC: Open mech./overload crack & spall
PCR: Pattern cracks
MSG: Missing
MSC: Missing Connection
PNT: Paint Loss

## Gridlines

"0" defines the edge of concrete deck adjacent to Gridline 1 (or lowest number).
The next higher number defines the edge of concrete deck adjacent to last Gridline number.
"0A" defines the edge of concrete deck adjacent to Gridline A (or lowest letter).
The next higher letter defines the edge of concrete deck adjacent to last Gridline letter.
Structural elements beyond the edge of deck will be defined by the Gridline at edge of deck, plus the distance in feet (or meters for metric drawings) in between.

## Pile Orientation Key

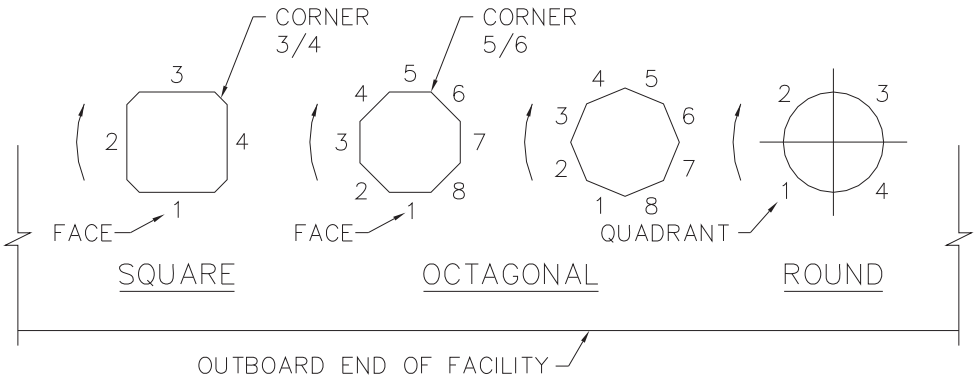

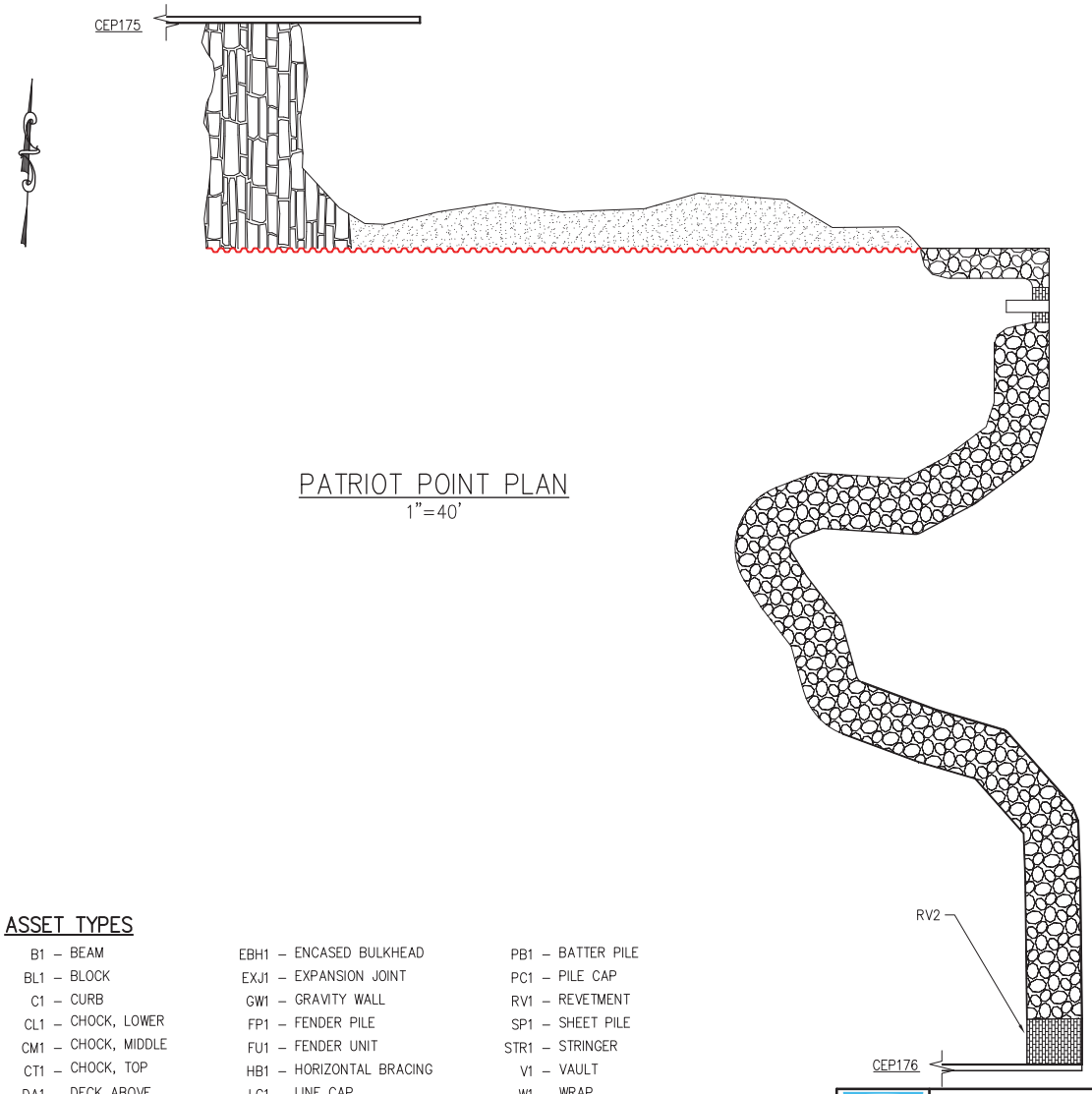


PATRIOT POINT PLAN
1"=40'

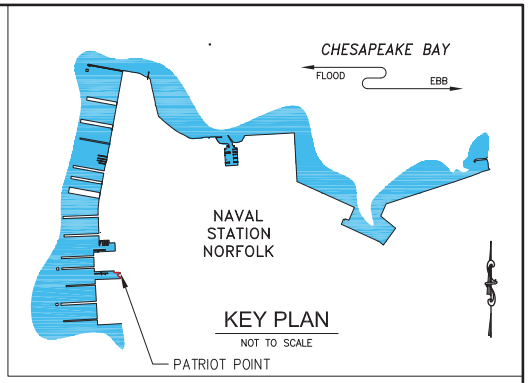


KEY PLAN
NOT TO SCALE

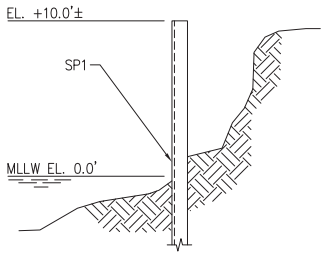


PATRIOT POINT NORTH BULKEAD SECTION
1/8"=1'-0"

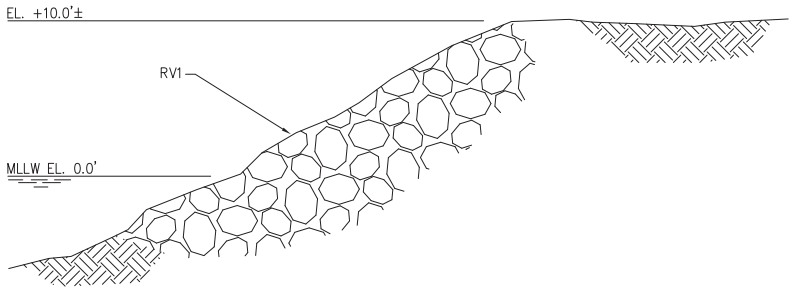


PATRIOT POINT REVETMENT SECTION
1/8"=1'-0"

## ASSET TYPES

B1 – BEAM
BL1 – BLOCK
C1 – CURB
CL1 – CHOCK, LOWER
CM1 – CHOCK, MIDDLE
CT1 – CHOCK, TOP
DA1 – DECK ABOVE
DB1 – DIAGONAL BRACING
DU1 – DECK UNDERSIDE
EBH1 – ENCASED BULKHEAD
EXJ1 – EXPANSION JOINT
GW1 – GRAVITY WALL
FP1 – FENDER PILE
FU1 – FENDER UNIT
HB1 – HORIZONTAL BRACING
LC1 – LINE CAP
MF1 – MOORING FITTING
MFD1 – MOORING FOUNDATION
P1 – PILE
PB1 – BATTER PILE
PC1 – PILE CAP
RV1 – REVETMENT
SP1 – SHEET PILE
STR1 – STRINGER
V1 – VAULT
W1 – WRAP
WL1 – WALE LOWER
WT1 – WALE TOP

NAVFAC

GRAPHIC SCALE
1"=40' 0 40 80 FT.
1/8"=1'-0" 0 5 10 15 FT.

DATE
MAY 2008

HPA
Contract Number
N62473-06-D-3029

NAVAL FACILITIES ENGINEERING SERVICE CENTER
EAST COAST DETACHMENT
WASHINGTON D.C.

NAVAL STATION NORFOLK NORFOLK, VA
PATRIOT POINT
ASSET INVENTORY

FIG. NO.
A-5

P:\Active Projects\DNAVY 701 – 703 – NAVSTA Norfolk\26 – Reports\26.3 – Final (Submitted 5-14-08)\26.4.3 – Figures\DNAVY702-F00A-5.dwg 05/12/08 19:11 MartinezMA

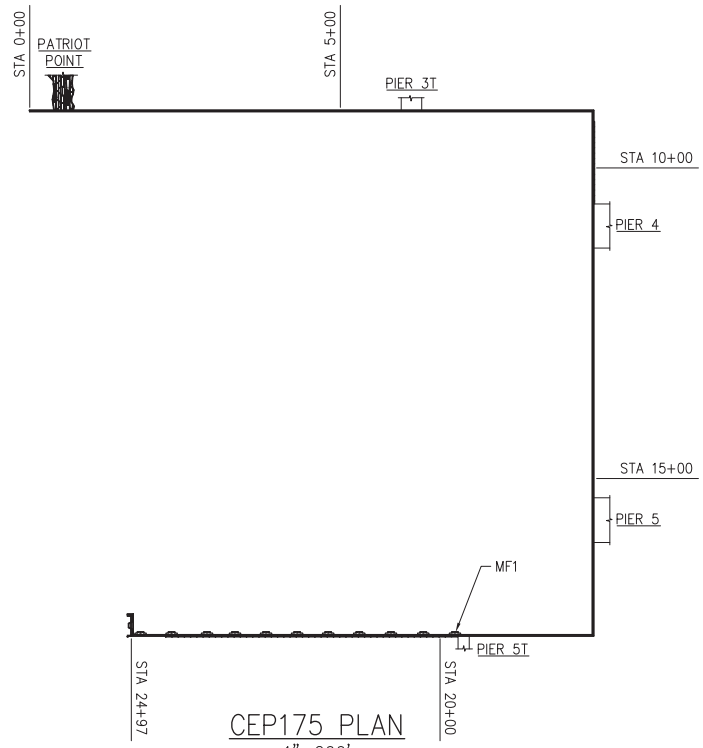


CEP175 PLAN
1"=200'

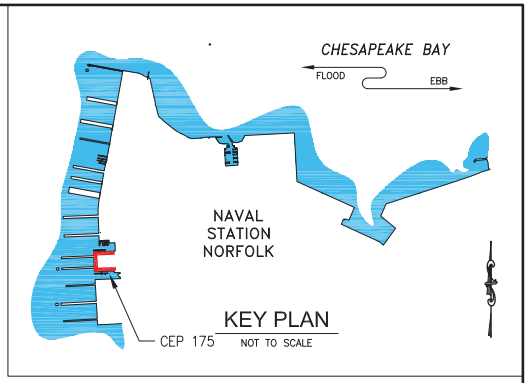


KEY PLAN
NOT TO SCALE

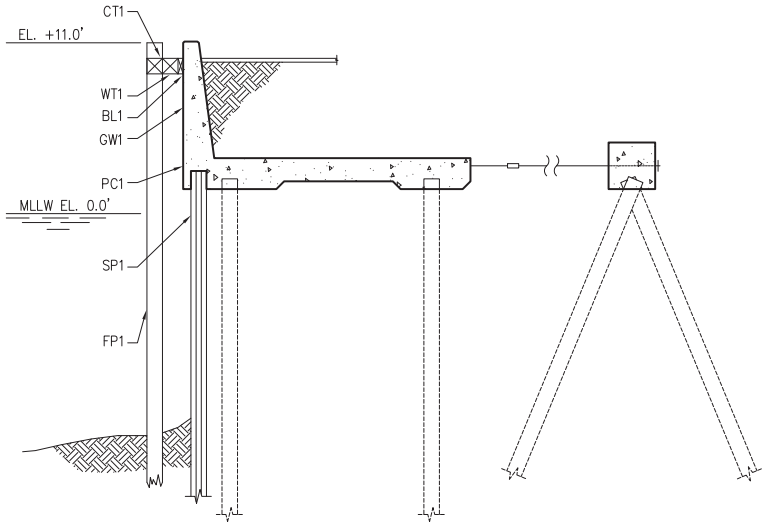


CEP175 SECTION
1/8"=1'-0"

## ASSET TYPES

| | | |
|---|---|---|
| B1 – BEAM | EBH1 – ENCASED BULKHEAD | PB1 – BATTER PILE |
| BL1 – BLOCK | EXJ1 – EXPANSION JOINT | PC1 – PILE CAP |
| C1 – CURB | GW1 – GRAVITY WALL | RV1 – REVETMENT |
| CL1 – CHOCK, LOWER | FP1 – FENDER PILE | SP1 – SHEET PILE |
| CM1 – CHOCK, MIDDLE | FU1 – FENDER UNIT | STR1 – STRINGER |
| CT1 – CHOCK, TOP | HB1 – HORIZONTAL BRACING | V1 – VAULT |
| DA1 – DECK ABOVE | LC1 – LINE CAP | W1 – WRAP |
| DB1 – DIAGONAL BRACING | MF1 – MOORING FITTING | WL1 – WALE LOWER |
| DU1 – DECK UNDERSIDE | MFD1 – MOORING FOUNDATION | WT1 – WALE TOP |
| | P1 – PILE | |

NAVFAC

GRAPHIC SCALE
1"=200' 0 200 400 FT.
1/8"=1'-0" 0 5 10 15 FT.

DATE
MAY 2008

HPA
Contract Number
N62473-06-D-3029

NAVAL FACILITIES ENGINEERING SERVICE CENTER
EAST COAST DETACHMENT
WASHINGTON D.C.

NAVAL STATION NORFOLK — NORFOLK, VA
CEP175 BULKHEAD
ASSET INVENTORY

FIG. NO. A-6

P:\Active Projects\DNAVY 701 – 703 – NAVSTA Norfolk\26 – Reports\26.3 – Final (Submitted 5-14-08)\26.4.3 – Figures\DNAVY702-F00A-6.dwg 05/12/08 19:10 MartinezMA

## ASSET TYPES

| | | |
|---|---|---|
| B1 – BEAM | EBH1 – ENCASED BULKHEAD | PB1 – BATTER PILE |
| BL1 – BLOCK | EXJ1 – EXPANSION JOINT | PC1 – PILE CAP |
| C1 – CURB | GW1 – GRAVITY WALL | RV1 – REVETMENT |
| CL1 – CHOCK, LOWER | FP1 – FENDER PILE | SP1 – SHEET PILE |
| CM1 – CHOCK, MIDDLE | FU1 – FENDER UNIT | STR1 – STRINGER |
| CT1 – CHOCK, TOP | HB1 – HORIZONTAL BRACING | V1 – VAULT |
| DA1 – DECK ABOVE | LC1 – LINE CAP | W1 – WRAP |
| DB1 – DIAGONAL BRACING | MF1 – MOORING FITTING | WL1 – WALE LOWER |
| DU1 – DECK UNDERSIDE | MFD1 – MOORING FOUNDATION | WT1 – WALE TOP |
| | P1 – PILE | |

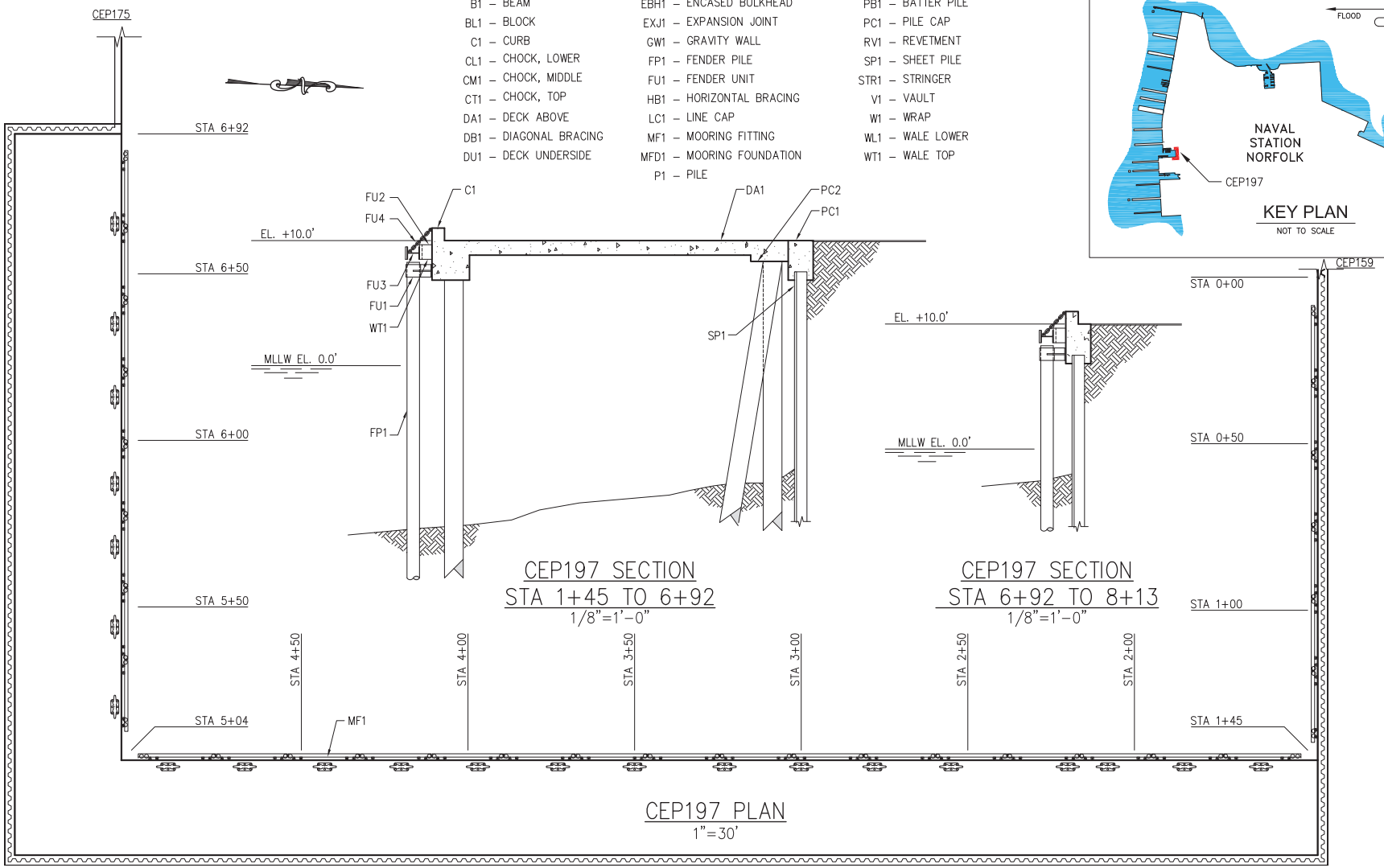


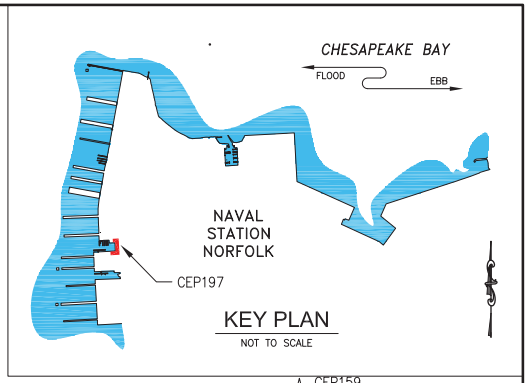


GRAPHIC SCALE
1"=30' 0 30 60 FT.
1/8"=1'-0" 0 5 10 15 FT.

DATE
MAY 2008

Contract Number
N62473-06-D-3029

NAVAL FACILITIES ENGINEERING SERVICE CENTER
EAST COAST DETACHMENT
WASHINGTON D.C.

NAVAL STATION NORFOLK — NORFOLK, VA

CEP197 BULKHEAD
ASSET INVENTORY

FIG. NO. A-7

P:\Active Projects\DNAVY 701 – 703 – NAVSTA Norfolk\26 – Reports\26.3 – Final (Submitted 5-14-08)\26.4.3 – Figures\DNAVY702-F00A-7.dwg 05/12/08 19:09 MartinezMA

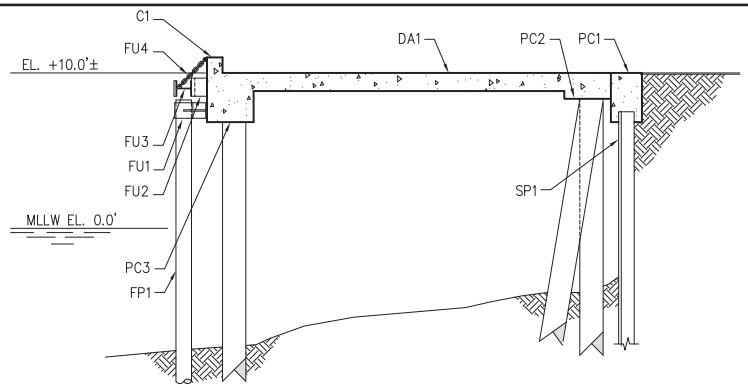


CEP159 SECTION – STA 0+00 TO 3+75
1/8"=1'-0"

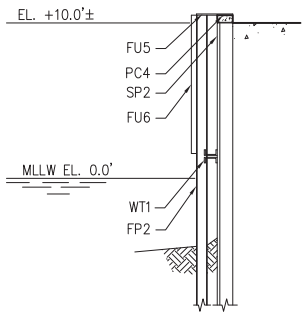


CEP159 SECTION – STA 3+95 TO 5+95
1/8"=1'-0"

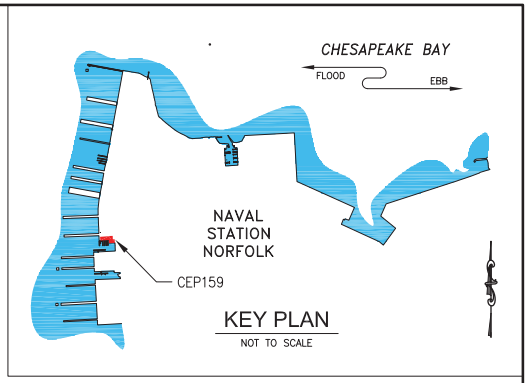


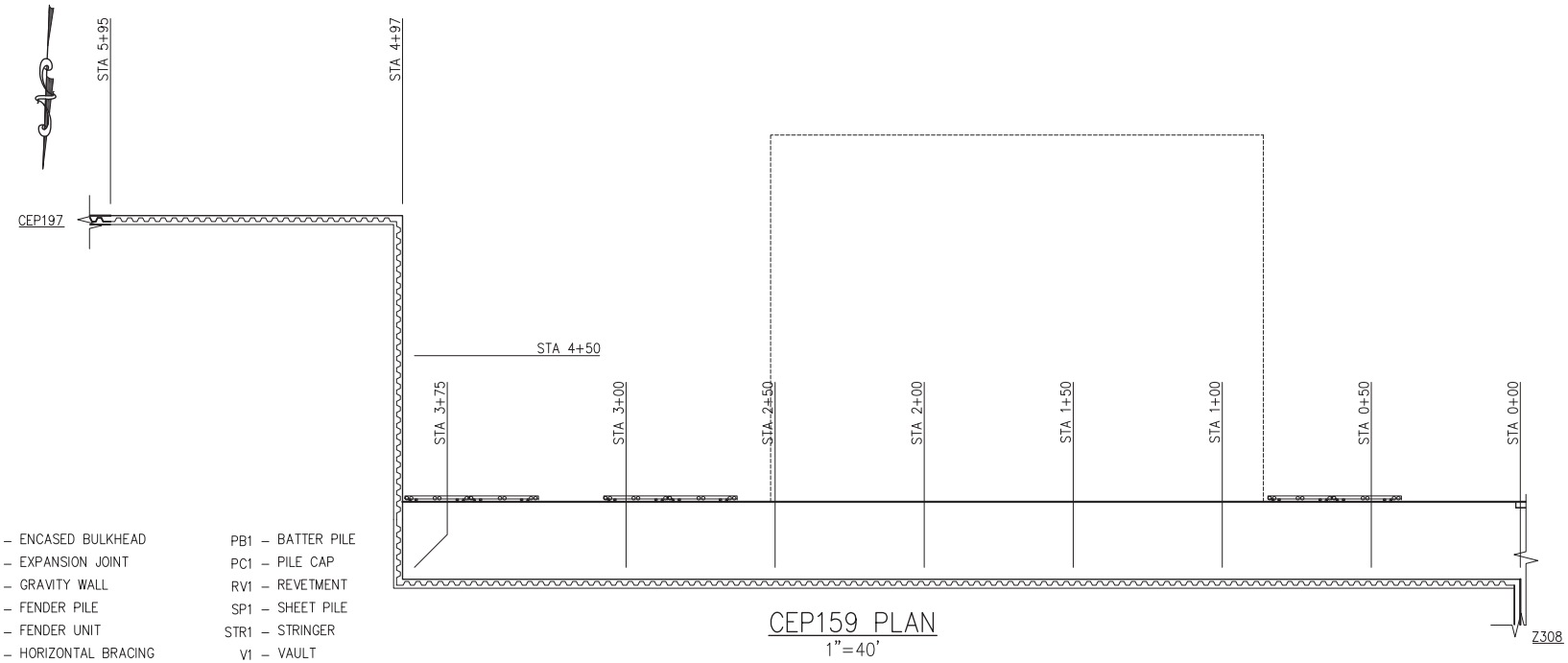


CEP159 PLAN
1"=40'

## ASSET TYPES

B1 – BEAM
BL1 – BLOCK
C1 – CURB
CL1 – CHOCK, LOWER
CM1 – CHOCK, MIDDLE
CT1 – CHOCK, TOP
DA1 – DECK ABOVE
DB1 – DIAGONAL BRACING
DU1 – DECK UNDERSIDE

EBH1 – ENCASED BULKHEAD
EXJ1 – EXPANSION JOINT
GW1 – GRAVITY WALL
FP1 – FENDER PILE
FU1 – FENDER UNIT
HB1 – HORIZONTAL BRACING
LC1 – LINE CAP
MF1 – MOORING FITTING
MFD1 – MOORING FOUNDATION
P1 – PILE

PB1 – BATTER PILE
PC1 – PILE CAP
RV1 – REVETMENT
SP1 – SHEET PILE
STR1 – STRINGER
V1 – VAULT
W1 – WRAP
WL1 – WALE LOWER
WT1 – WALE TOP

NAVFAC

GRAPHIC SCALE
1"=40' 0 40 80 FT.
1/8"=1'-0" 0 5 10 15 FT.

DATE
MAY 2008

HPA
Contract Number
N62473-06-D-3029

NAVAL FACILITIES ENGINEERING SERVICE CENTER
EAST COAST DETACHMENT
WASHINGTON D.C.

NAVAL STATION NORFOLK — NORFOLK, VA
CEP159 BULKHEAD
ASSET INVENTORY

FIG. NO. A-8

P:\Active Projects\DINAVY 701 – 703 – NAVSTA Norfolk\26 – Reports\26.3 – Final (Submitted 5-14-08)\26.4.3 – Figures\DINAVY702-F00A-8.dwg 05/12/08 19:07 MartinezMA

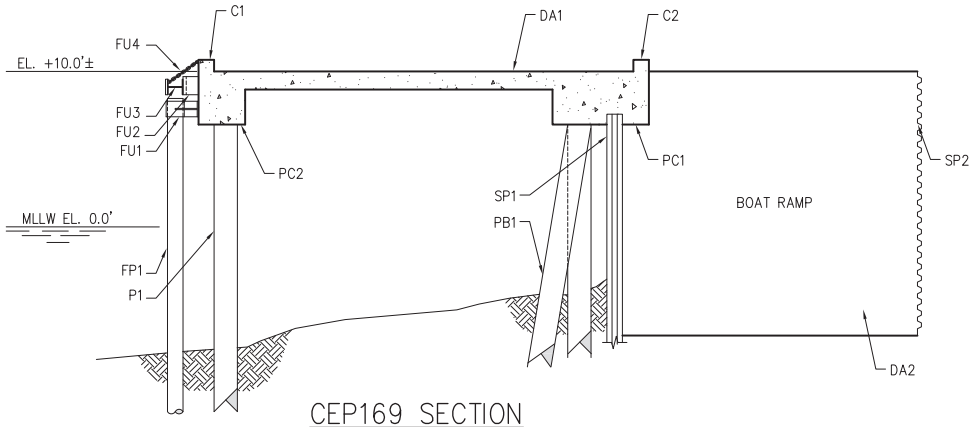


## CEP169 SECTION
1/8"=1'-0"

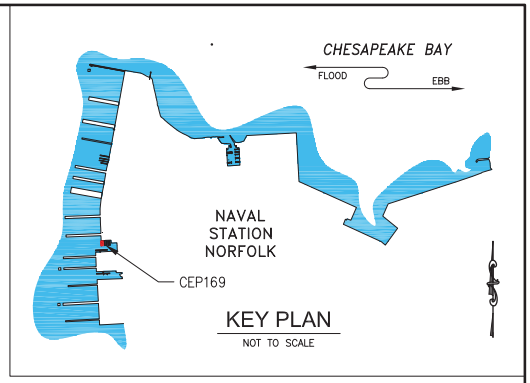


## KEY PLAN
NOT TO SCALE

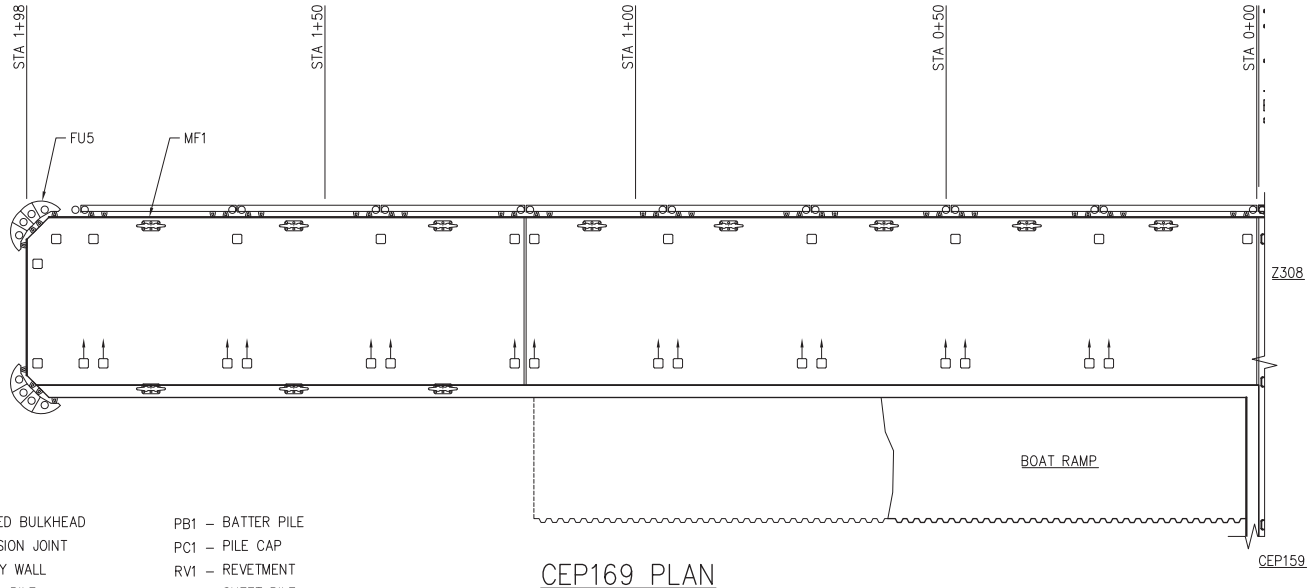


## CEP169 PLAN
1"=20'

## ASSET TYPES

B1 – BEAM
BL1 – BLOCK
C1 – CURB
CL1 – CHOCK, LOWER
CM1 – CHOCK, MIDDLE
CT1 – CHOCK, TOP
DA1 – DECK ABOVE
DB1 – DIAGONAL BRACING
DU1 – DECK UNDERSIDE
EBH1 – ENCASED BULKHEAD
EXJ1 – EXPANSION JOINT
GW1 – GRAVITY WALL
FP1 – FENDER PILE
FU1 – FENDER UNIT
HB1 – HORIZONTAL BRACING
LC1 – LINE CAP
MF1 – MOORING FITTING
MFD1 – MOORING FOUNDATION
P1 – PILE
PB1 – BATTER PILE
PC1 – PILE CAP
RV1 – REVETMENT
SP1 – SHEET PILE
STR1 – STRINGER
V1 – VAULT
W1 – WRAP
WL1 – WALE LOWER
WT1 – WALE TOP

NAVFAC

GRAPHIC SCALE
1"=20' 0 20 40 FT.
1/8"=1'-0" 0 5 10 15 FT.

DATE
MAY 2008

HPA
Contract Number
N62473-06-D-3029

NAVAL FACILITIES ENGINEERING SERVICE CENTER
EAST COAST DETACHMENT
WASHINGTON D.C.

NAVAL STATION NORFOLK — NORFOLK, VA
CEP169 BREAKWATER
ASSET INVENTORY

FIG. NO. A-9

P:\Active Projects\DNAVY 701 – 703 – NAVSTA Norfolk\26 – Reports\26.3 – Final (Submitted 5-14-08)\26.4.3 – Figures\DNAVY702-F00A-9.dwg 05/12/08 19:07 MartinezMA

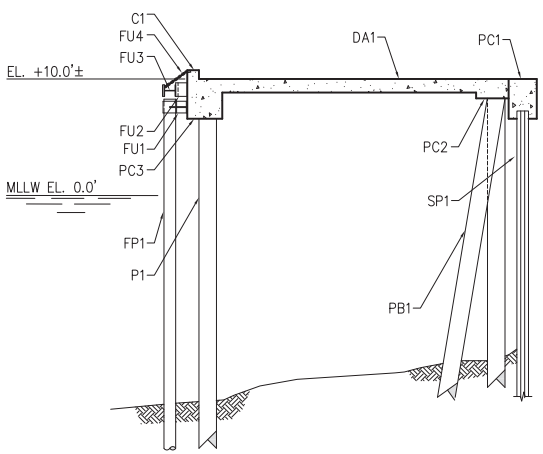


Z308 SECTION – STA 8+40 TO 10+28
3/32"=1'-0"

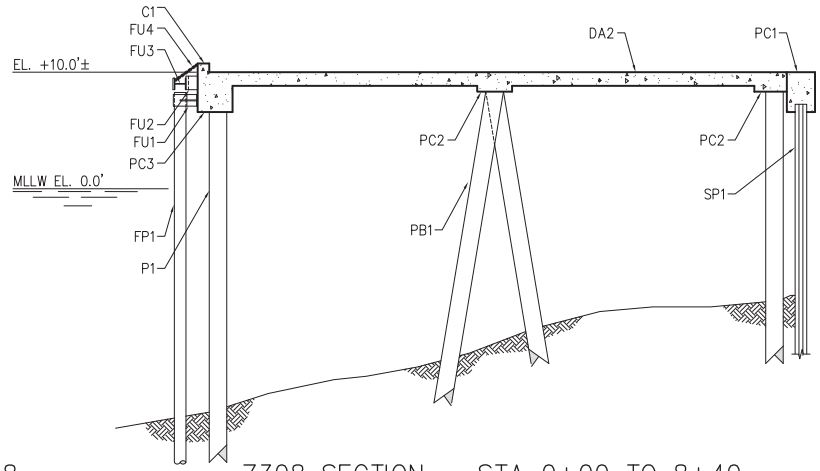


Z308 SECTION – STA 0+00 TO 8+40
3/32"=1'-0"

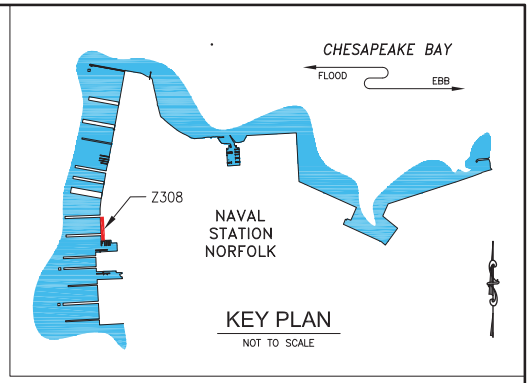


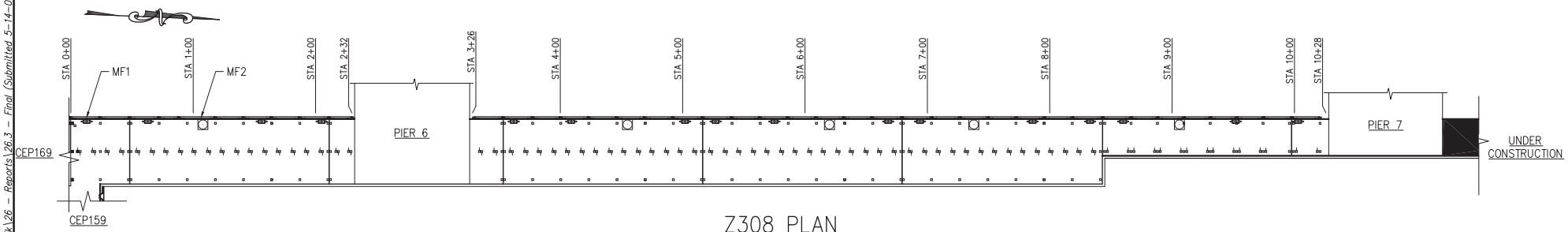


Z308 PLAN
1"=80'

## ASSET TYPES

B1 – BEAM
BL1 – BLOCK
C1 – CURB
CL1 – CHOCK, LOWER
CM1 – CHOCK, MIDDLE
CT1 – CHOCK, TOP
DA1 – DECK ABOVE
DB1 – DIAGONAL BRACING
DU1 – DECK UNDERSIDE

EBH1 – ENCASED BULKHEAD
EXJ1 – EXPANSION JOINT
GW1 – GRAVITY WALL
FP1 – FENDER PILE
FU1 – FENDER UNIT
HB1 – HORIZONTAL BRACING
LC1 – LINE CAP
MF1 – MOORING FITTING
MFD1 – MOORING FOUNDATION
P1 – PILE

PB1 – BATTER PILE
PC1 – PILE CAP
RV1 – REVETMENT
SP1 – SHEET PILE
STR1 – STRINGER
V1 – VAULT
W1 – WRAP
WL1 – WALE LOWER
WT1 – WALE TOP

NAVFAC

GRAPHIC SCALE
1"=80' 0 80 160 FT.
3/32"=1'-0" 0 5 20 FT.

DATE
MAY 2008

HPA
Contract Number
N62473-06-D-3029

NAVAL FACILITIES ENGINEERING SERVICE CENTER
EAST COAST DETACHMENT
WASHINGTON D.C.

NAVAL STATION NORFOLK — NORFOLK, VA
Z308 BULKHEAD AND PLATFORM
ASSET INVENTORY

FIG. NO.
A-10



P:\Active Projects\DNAVY 701 – 703 – NAVSTA Norfolk\26 – Reports\26.3 – Final (Submitted 5-14-08)\26.4.3 – Figures\DNAVY702-F00A-10.dwg 05/12/08 19:05 MartinezMA